NUREG/CR-4832
SAND92-0537
Vol. 9

Analysis of the LaSalle Unit 2 Nuclear Power Plant: Risk Methods Integration and Evaluation Program (RMIEP)

Internal Fire Analysis

Prepared by
J. A. Lambright, D. A. Brosseau, A. C. Payne, Jr., S. L. Daniel

Sandia National Laboratories
Operated by
Sandia Corporation

Prepared for
U.S. Nuclear Regulatory Commission

AVAILABILITY NOTICE

Availability of Reference Materials Cited in NRC Publications

Most documents cited in NRC publications will be available from one of the following sources:

1. The NRC Public Document Room, 2120 L Street, NW., Lower Level, Washington, DC 20555

2. The Superintendent of Documents, U.S. Government Printing Office, P.O. Box 37082, Washington, DC 20013-7082

3. The National Technical Information Service, Springfield, VA 22161

Although the listing that follows represents the majority of documents cited in NRC publications, it is not intended to be exhaustive.

Referenced documents available for inspection and copying for a fee from the NRC Public Document Room include NRC correspondence and internal NRC memoranda; NRC bulletins, circulars, information notices, inspection and investigation notices; licensee event reports; vendor reports and correspondence; Commission papers; and applicant and licensee documents and correspondence.

The following documents in the NUREG series are available for purchase from the GPO Sales Program: formal NRC staff and contractor reports, NRC-sponsored conference proceedings, international agreement reports, grant publications, and NRC booklets and brochures. Also available are regulatory guides, NRC regulations in the *Code of Federal Regulations*, and *Nuclear Regulatory Commission Issuances*.

Documents available from the National Technical Information Service include NUREG-series reports and technical reports prepared by other Federal agencies and reports prepared by the Atomic Energy Commission, forerunner agency to the Nuclear Regulatory Commission.

Documents available from public and special technical libraries include all open literature items, such as books, journal articles, and transactions. *Federal Register* notices, Federal and State legislation, and congressional reports can usually be obtained from these libraries.

Documents such as theses, dissertations, foreign reports and translations, and non-NRC conference proceedings are available for purchase from the organization sponsoring the publication cited.

Single copies of NRC draft reports are available free, to the extent of supply, upon written request to the Office of Administration, Distribution and Mail Services Section, U.S. Nuclear Regulatory Commission, Washington, DC 20555.

Copies of industry codes and standards used in a substantive manner in the NRC regulatory process are maintained at the NRC Library, 7920 Norfolk Avenue, Bethesda, Maryland, for use by the public. Codes and standards are usually copyrighted and may be purchased from the originating organization or, if they are American National Standards, from the American National Standards Institute, 1430 Broadway, New York, NY 10018.

DISCLAIMER NOTICE

This report was prepared as an account of work sponsored by an agency of the United States Government. Neither the United States Government nor any agency thereof, or any of their employees, makes any warranty, expressed or implied, or assumes any legal liability of responsibility for any third party's use, or the results of such use, of any information, apparatus, product or process disclosed in this report, or represents that its use by such third party would not infringe privately owned rights.

NUREG/CR–4832
SAND92–0537
Vol. 9
RX

Analysis of the LaSalle Unit 2 Nuclear Power Plant: Risk Methods Integration and Evaluation Program (RMIEP)

Internal Fire Analysis

Manuscript Completed: March 1993
Date Published: March 1993

Prepared by
J. A. Lambright, D. A. Brosseau,* A. C. Payne, Jr., S. L. Daniel

Sandia National Laboratories
Albuquerque, NM 87185

Prepared for
Division of Safety Issue Resolution
Office of Nuclear Regulatory Research
U.S. Nuclear Regulatory Commission
Washington, DC 20555
NRC FIN A1386

*Formerly with ERCE Inc., Albuquerque, NM

ABSTRACT

This report is a description of the internal fire analysis performed on the LaSalle County Nuclear Generating Station, Unit II. Insights gained from the NUREG-1150 fire analyses of Peach Bottom and Surry were used to the greatest extent possible in this risk assessment.

As part of this effort, a new data base for fires was constructed (NUREG/CR-4586). This data base aided in quantification of initiating event frequencies. The most detailed integration with internal events analysis to date in fire risk assessment was also accomplished. The same system fault trees used for internal events were utilized in the fire analysis, which included modeling of components down to the contact pair level. Subsidiary equations were created to map the effects of cable failures and spurious actuations. For all components modeled in the internal event fault trees, associated cables were identified and component and cable locations were traced and mapped into the fault trees.

A detailed screening analysis was performed which showed most plant areas had a negligible contribution to fire-induced core damage frequency. A detailed analysis of the fire risk resulted in a total (mean) core damage frequency of 3.21E-5 per year.

TABLE OF CONTENTS

Section	Page
ABSTRACT	iii/iv
LIST OF FIGURES	ix
LIST OF TABLES	xi
FOREWORD	xiii
ACKNOWLEDGMENTS	xvii
EXECUTIVE SUMMARY	xix
1.0 Introduction	1-1
1.1 The LaSalle Fire Analysis	1-1
1.2 Steps in the Analyses	1-2
1.2.1 Plant Walkdown and Data Gathering	1-2
1.2.2 Fire Risk Assessment Methodology	1-3
1.3 References	1-6
2.0 Plant Description	2-1
2.1 Plant Site and General Characteristics	2-1
2.2 Description of Plant Systems	2-2
2.2.1 Introduction	2-2
2.2.2 Main Steam System	2-2
2.2.3 Main Feedwater System	2-4
2.2.4 Emergency Core Cooling System	2-6
2.2.5 Core Standby Cooling System	2-7
2.2.6 High Pressure Core Spray System	2-9
2.2.7 Low Pressure Core Spray System	2-10
2.2.8 Reactor Core Isolation Cooling System	2-12
2.2.9 Automatic Depressurization System	2-15
2.2.10 Residual Heat Removal System	2-17
2.2.11 Primary Containment Venting	2-21
2.2.12 AC Electrical Distribution System	2-24
2.2.13 DC Electrical Distribution System	2-27
2.2.14 Condensate System	2-34
2.3 References	2-36
3.0 LaSalle Fire Analysis and Quantification	3-1
3.1 Introduction	3-1
3.2 Fire Areas Analyzed	3-5
3.2.1 Introduction	3-5
3.2.2 Definitions	3-26
3.2.3 Procedure and Associated Assumptions	3-40
3.2.4 Results	3-46

TABLE OF CONTENTS (Continued)

Section Page

3.3 Initiating Event Frequencies....3-46

3.4 Determination of Accident Sequences to be Evaluated....3-49

3.5 Detailed Description of the Initial Quantification Analysis....3-53
3.5.1 External Events Location Analysis for Fire....3-54
3.5.2 System Fault Trees....3-57
3.5.2.1 Solving Front-Line System Fault tress....3-57
3.5.2.2 Determining System Cut Sets For Fire....3-58
3.5.3 Determining Fire Sequences....3-59
3.5.4 Initial Screening of Accident Sequence Cut Sets....3-60
3.5.4.1 Probabilistic Screening of Core Damage Fire Scenarios Before Plant Visit....3-60
3.5.4.2 Screening of Fire Areas Following the Plant Visit....3-63
3.5.5 Evaluation of Fire Areas Remaining Following Plant Visit....3-67
3.5.5.1 Procedure Used to Determine the System Component/Cabling Locations Within a Fire Area....3-68
3.5.5.2 Confirmatory Plant Visit....3-73

3.6 Fire Propagation Modeling....3-74
3.6.1 Fire Area E, Location 5C11-4....3-80
3.6.1.1 Results....3-80
3.6.1.2 Discussion....3-80
3.6.2 Fire Area N, Location 4D2, Cable Spreading Room....3-81
3.6.2.1 Results....3-81
3.6.2.2 Discussion....3-81
3.6.3 Fire Area P, Location 4D4, Electrical Equipment Room....3-81
3.6.3.1 Results....3-81
3.6.3.2 Discussion....3-81
3.6.4 Fire Area T, Location 4E2-2, Corner of Unit 2 Auxiliary Equipment Room....3-82
3.6.4.1 Results....3-82
3.6.4.2 Discussion....3-82
3.6.5 Fire Area W, Location 4E4, Unit 2, Division 2, Essential Switchgear Room and Fire Area Y, Location 4F2, Unit 2, Division 1, Essential Switchgear Room....3-82
3.6.5.1 Results....3-82
3.6.5.2 Discussion....3-82

TABLE OF CONTENTS (Continued)

Section Page

3.6.6 Fire Area Z, Location 4F3, Auxiliary Building Rad Chem Offices....3-83
3.6.6.1 Results....3-83
3.6.6.2 Discussion....3-83
3.6.7 Fire Area AA, Location 5B13-2, BOP Cable Area North....3-83
3.6.7.1 Results....3-83
3.6.7.2 Discussion....3-83
3.6.8 Fire Area AC, Location 4E4-1, Corner of Unit 2, Division 2 Essential Switchgear Room...3-83
3.6.8.1 Results....3-83
3.6.8.2 Discussion....3-84
3.6.9 Fire Area S, Location 4E2-1, Auxiliary Equipment Room....3-84
3.6.9.1 Results....3-84
3.6.9.2 Discussion....3-84

3.7 Barrier Failure Analysis....3-84

3.8 Recovery Analysis....3-85

3.9 Uncertainty Analysis....3-85

3.10 Description of Unscreened Fire-Induced Core Damage Scenarios and Their Associated Fire Areas....3-87
3.10.1 Introduction....3-87
3.10.2 Control Room....3-87
3.10.3 Fire Area E, Location 5C11-4, Turbine Building Corridor....3-101
3.10.4 Fire Area N, Location 4D2, Cable Spreading Room....3-102
3.10.5 Fire Area P, Location 4D4, Electrical Equipment Room....3-104
3.10.6 Fire Area T, Location 4E2-2, Unit 2, Auxiliary Equipment Room....3-105
3.10.7 Fire Area W, Location 4E4, Unit 2, Division 2, Essential Switchgear Room....3-107
3.10.8 Fire Area Y, Location 4F2, Unit 2, Division 1, Essential Switchgear Room....3-109
3.10.9 Fire Area Z, Location 4F3, Auxiliary Building Rad/Chem Offices....3-111
3.10.10 Fire Area AA, Location 5B13-2, BOP Cable Area North....3-112
3.10.11 Fire Area AC, Location 4E4-1, Cable Shaft Room Adjacent to Unit 2, Division 2, Essential Switchgear Room....3-114

TABLE OF CONTENTS (Concluded)

Section | Page

3.10.12 Fire Areas S, Location 4E2-1, Unit 2, Auxiliary Equipment Room....3-115

3.11 Conclusions....3-118

3.12 References....3-158

Appendix A - Manual Fire Suppression Analysis....A-1

Appendix B - LaSalle Critical Components By Fire Area....B-1

Appendix C - Generic Fire Event Data....C-1

Appendix D - Detailed Description Of Location Analysis....D-1

Appendix E - Location Information....E-1

Appendix F - TEMAC Code Output....F-1

LIST OF FIGURES

Figure		Page
2.1	Main Steam System Simplified Flow Diagram	2-3
2.2	Main Feedwater System Simplified Flow Diagram	2-5
2.3	Core Standby Cooling System Simplified Flow Diagram	2-8
2.4	High Pressure Core Spray System Simplified Flow Diagram	2-11
2.5	Low Pressure Core Spray System Simplified Flow Diagram	2-13
2.6	Reactor Core Isolation Cooling System Simplified Flow Diagram	2-14
2.7	Automatic Depressurization System Simplified Flow Diagram	2-16
2.8	RHR System Composite Simplified Flow Diagram	2-19
2.9	Primary Containment Vent and Purge System Simplified Flow Diagram	2-22
2.10	Standby Gas Treatment System Simplified Flow Diagram	2-23
2.11	AC Distribution System Simplified Diagram	2-25
2.12	AC Ring Bus Distribution Schematic	2-26
2.13	250 V DC System Simplified Diagram	2-28
2.14	125 V DC ESF Division 1 Schematic	2-29
2.15	125 V DC ESF Division 2 Schematic	2-30
2.16	125 V DC ESF Division 3 Schematic	2-31
2.17	Condensate System Simplified Diagram	2-35
3.1	Final LaSalle Fire Locations	3-6
3.2	Final LaSalle Fire Areas	3-16
3.3	LaSalle Transient Event Tree	3-50
3.4	COMPBRN Zone Model	3-75

LIST OF TABLES

Table		Page
3.1	Dominant LaSalle Fire Area Core Damage Frequency Contributors	3-2
3.2	Dominant Accident Sequence Core Damage Frequency Contributors	3-3
3.3	LaSalle County Station Nuclear Power Plant	3-27
3.4	Description(s) As to Why Selected Fire Zones at LaSalle Do Not Equal Fire Areas as Defined in This Report	3-31
3.5	Statistical Evidence of Fires in Light Water Reactors (As of June 1985)	3-47
3.6	LaSalle Fire Initiating Event Frequencies (yr.)	3-49
3.7	Fire Sequences Evaluated for LaSalle	3-53
3.8	List of Fire Areas that Required Investigating on Plant Visit	3-61
3.9	LaSalle Room-to-Room Fire Spread Evaluation	3-64
3.10	LaSalle Fire Area Characteristics	3-65
3.11	Fire Areas (Rooms) Remaining After Screening that Require Evaluation	3-67
3.12	Matrix of System Versus Rooms in Reactor Building	3-71
3.13	Modified COMPBRN III Input Parameters	3-78
3.14	Summary of COMPBRN Results	3-79
3.15	Approximate Number of Barriers at a Plant	3-84
3.16	Estimates of Single Barrier Failure Rate	3-85
3.17	Random (Internal Event) Basic Event Definitions	3-88
3.18	Control Room Core Damage Equation Terms and Distributions	3-101
3.19	Fire Area E Core Damage Equation Terms and Distributions	3-103
3.20	Fire Area N Core Damage Equation Terms and Distributions	3-104
3.21	Fire Area P Core Damage Equation Terms and Distributions	3-106
3.22	Fire Area T Core Damage Equation Terms and Distributions	3-107
3.23	Fire Area W, Scenario 1, Core Damage Equation Terms and Distributions	3-108
3.24	Fire Area W, Scenario 2, Core Damage Equation Terms and Distributions	3-109
3.25	Fire Area Y, Scenario 1, Core Damage Equation Terms and Distributions	3-110
3.26	Fire Area Y, Scenario 2, Core Damage Equation Terms and Distributions	3-111
3.27	Fire Area Z Core Damage Equation Terms and Distributions	3-113
3.28	Fire Area AA Core Damage Equation Terms and Distributions	3-114

LIST OF TABLES (Concluded)

Table		Page
3.29	Fire Area AC Core Damage Equation Terms and Distributions	3-115
3.30	Fire Area S, Scenario 1, Core Damage Equation Terms and Distributions	3-117
3.31	Fire Area S, Scenario 2, Core Damage Equation Terms and Distributions	3-117
3.32A	Random Failure Equation for Sequence 2	3-122
3.32B	Random Failure Equations for Sequence 3B	3-123

FOREWORD

LaSalle Unit 2 Level III Probabilistic Risk Assessment

In recent years, applications of Probabilistic Risk Assessment (PRA) to nuclear power plants have experienced increasing acceptance and use, particularly in addressing regulatory issues. Although progress on the PRA front has been impressive, the usage of PRA methods and insights to address increasingly broader regulatory issues has resulted in the need for continued improvement in and expansion of PRA methods to support the needs of the Nuclear Regulatory Commission (NRC).

Before any new PRA methods can be considered suitable for routine use in the regulatory arena, they need to be integrated into the overall framework of a PRA, appropriate interfaces defined, and the utility of the methods evaluated. The LaSalle Unit 2 Level III PRA, described in this and associated reports, integrates new methods and new applications of previous methods into a PRA framework that provides for this integration and evaluation. It helps lay the bases for both the routine use of the methods and the preparation of procedures that will provide guidance for future PRAs used in addressing regulatory issues. These new methods, once integrated into the framework of a PRA and evaluated, lead to a more complete PRA analysis, a better understanding of the uncertainties in PRA results, and broader insights into the importance of plant design and operational characteristics to public risk.

In order to satisfy the needs described above, the LaSalle Unit 2, Level III PRA addresses the following broad objectives:

1. To develop and apply methods to integrate internal, external, and dependent failure risk methods to achieve greater efficiency, consistency, and completeness in the conduct of risk assessments;

2. To evaluate PRA technology developments and formulate improved PRA procedures;

3. To identify, evaluate, and effectively display the uncertainties in PRA risk predictions that stem from limitations in plant modeling, PRA methods, data, or physical processes that occur during the evolution of a severe accident;

4. To conduct a PRA on a BWR 5, Mark II nuclear power plant, ascertain the plant's dominant accident sequences, evaluate the core and containment response to accidents, calculate the consequences of the accidents, and assess overall risk; and finally

5. To formulate the results in such a manner as to allow the PRA to be easily updated and to allow testing of future improvements in methodology, data, and the treatment of phenomena.

The LaSalle Unit 2 PRA was performed for the NRC by Sandia National Laboratories (SNL) with substantial help from Commonwealth Edison (CECo) and its contractors. Because of the size and scope of the PRA, various related programs were set up to conduct different aspects of the analysis. Additionally, existing programs had tasks added to perform some analyses for the LaSalle PRA. The responsibility for overall direction of the PRA was assigned to the Risk Methods Integration and Evaluation Program (RMIEP). RMIEP was specifically responsible for all aspects of the Level I analysis (i.e., the core damage analysis). The Phenomenology and Risk Uncertainty Evaluation Program (PRUEP) was responsible for the Level II/III analysis (i.e., accident progression, source term, consequence analyses, and risk integration). Other programs provided support in various areas or performed some of the subanalyses. These programs include the Seismic Safety Margins Research Program (SSMRP) at Lawrence Livermore National Laboratory (LLNL), which performed the seismic analysis; the Integrated Dependent Failure Analysis Program, which developed methods and analyzed data for dependent failure modeling; the MELCOR Program, which modified the MELCOR code in response to the PRA's modeling needs; the Fire Research Program, which performed the fire analysis; the PRA Methods Development Program, which developed some of the new methods used in the PRA; and the Data Programs, which provided new and updated data for BWR plants similar to LaSalle. CECo provided plant design and operational information and reviewed many of the analysis results.

The LaSalle PRA was begun before the NUREG-1150 analysis and the LaSalle program has supplied the NUREG-1150 program with simplified location analysis methods for integrated analysis of external events, insights on possible subtle interactions that come from the very detailed system models used in the LaSalle PRA, core vulnerable sequence resolution methods, methods for handling and propagating statistical uncertainties in an integrated way through the entire analysis, and BWR thermal-hydraulic models which were adapted for the Peach Bottom and Grand Gulf analyses.

The Level I results of the LaSalle Unit 2 PRA are presented in: "Analysis of the LaSalle Unit 2 Nuclear Power Plant: Risk Methods Integration and Evaluation Program (RMIEP)," NUREG/CR-4832, SAND92-0537, ten volumes. The reports are organized as follows:

NUREG/CR-4832 - Volume 1:	Summary Report.
NUREG/CR-4832 - Volume 2:	Integrated Quantification and Uncertainty Analysis.
NUREG/CR-4832 - Volume 3:	Internal Events Accident Sequence Quantification.
NUREG/CR-4832 - Volume 4:	Initiating Events and Accident Sequence Delineation.

NUREG/CR-4832 - Volume 5: Parameter Estimation Analysis and Human Reliability Screening Analysis.

NUREG/CR-4832 - Volume 6: System Descriptions and Fault Tree Definition.

NUREG/CR-4832 - Volume 7: External Event Scoping Quantification.

NUREG/CR-4832 - Volume 8: Seismic Analysis.

NUREG/CR-4832 - Volume 9: Internal Fire Analysis.

NUREG/CR-4832 - Volume 10: Internal Flood Analysis.

The Level II/III results of the LaSalle Unit 2 PRA are presented in: "Integrated Risk Assessment For the LaSalle Unit 2 Nuclear Power Plant: Phenomenology and Risk Uncertainty Evaluation Program (PRUEP)," NUREG/CR-5305, SAND90-2765, 3 volumes. The reports are organized as follows:

NUREG/CR-5305 - Volume 1: Main Report

NUREG/CR-5305 - Volume 2: Appendices A-G

NUREG/CR-5305 - Volume 3: MELCOR Code Calculations

Important associated reports have been issued by the RMIEP Methods Development Program in: NUREG/CR-4834, Recovery Actions in PRA for the Risk Methods Integration and Evaluation Program (RMIEP); NUREG/CR-4835, Comparison and Application of Quantitative Human Reliability Analysis Methods for the Risk Methods Integration and Evaluation Program (RMIEP); NUREG/CR-4836, Approaches to Uncertainty Analysis in Probabilistic Risk Assessment; NUREG/CR-4838, Microcomputer Applications and Modifications to the Modular Fault Trees; and NUREG/CR-4840, Procedures for the External Event Core Damage Frequency Analysis for NUREG-1150.

Some of the computer codes, expert judgement elicitations, and other supporting information used in this analysis are documented in associated reports, including: NUREG/CR-4586, User's Guide for a Personal-Computer-Based Nuclear Power Plant Fire Data Base; NUREG/CR-4598, A User's Guide for the Top Event Matrix Analysis Code (TEMAC); NUREG/CR-5032, Modeling Time to Recovery and Initiating Event Frequency for Loss of Off-Site Power Incidents at Nuclear Power Plants; NUREG/CR-5088, Fire Risk Scoping Study: Investigation of Nuclear Power Plant Fire Risk, Including Previously Unaddressed Issues; NUREG/CR-5174, A Reference Manual for the Event Progression Analysis Code (EVNTRE); NUREG/CR-5253, PARTITION: A Program for Defining the Source Term/Consequence Analysis Interface in the NUREG-1150 Probabilistic Risk Assessments, User's Guide; NUREG/CR-5262, PRAMIS: Probabilistic Risk Assessment Model Integration System, User's Guide; NUREG/CR-5331, MELCOR Analysis for Accident Progression Issues; NUREG/CR-5346, Assessment of the XSOR Codes; and NUREG/CR-5380, A

User's Manual for the Postprocessing Program PSTEVNT. In addition the reader is directed to the NUREG-1150 technical support reports in NUREG/CR-4550 and 4551.

Arthur C. Payne, Jr.
Principal Investigator
Phenomenology and Risk Uncertainty Evaluation Program and
Risk Methods Integration and Evaluation Program
Division 6412, Reactor Systems Safety Analysis
Sandia National Laboratories
Albuquerque, New Mexico 87185

ACKNOWLEDGMENTS

W. T. Wheelis of Sandia National Laboratories developed the fire event data base that formed the basis of fire initiating event frequency determination. M. Dimacio of FirePro, Inc. performed a plant-specific analysis of the LaSalle fire brigade to estimate the time to fire suppression for all critical plant locations. W. Ferrell of Science Applications International Corporation was the fire zone system analyst and aided in the computer screening and cable location identification processes. S. J. Higgins of Sandia National Laboratories developed the computer programs for translating the location information into SETS code input format. The authors of this report would like to gratefully acknowledge the contribution of all four of the above individuals.

EXECUTIVE SUMMARY

A detailed fire risk assessment has been performed for the LaSalle Nuclear Plant. The techniques used in this assessment have made full use of insights gained during the past 10 years in risk assessment. This methodology utilizes previously completed internal event fault/event tree models. Thus, the level of detail of the fire analysis is consistent with the level of detail of the internal events analysis.

A detailed screening analysis was performed which showed most plant areas had a negligible contribution to fire-induced core damage frequency. The following eleven plant areas were found to have core damage frequency contributions of greater than 1E-09 per year:

a. Control Room
b. Turbine Building Corridor
c. Cable Spreading Room
d. Electrical Equipment Room
e. Auxiliary Equipment Room (2 areas)
f. Division 2 Essential Switchgear Room
g. Division 1 Essential Switchgear Room
h. Auxiliary Building Rad/Chem Offices
i. BOP Cable Area North
j. Cable Shaft Area

The overall total (mean) core damage frequency from fire was calculated to be 3.21E-5 per year.

In all areas except the control room, additional random (damage not related to the fire itself) failures of equipment were required to occur in order to obtain core damage. Adequate separation of equipment and/or cabling between redundant functions had the effect of reducing core damage frequency for those areas.

In the case of the control room, smoke-induced abandonment of the control room and subsequent transfer of control of the plant to the remote shutdown panel were found to constitute the dominant scenario. Installation of an independent and redundant means of plant control significantly reduced the core damage frequency for this area.

Detailed tracing of control, power, and actuation circuitry/cabling revealed that fires could damage the most plant safety functions in cable "pinchpoint" areas. A similar conclusion was reached in the performance of the NUREG-1150 fire risk assessments. In the LaSalle analysis, the level of detail of the cable tracing was significantly greater than in the NUREG-1150 analyses. Because of this added detail, many more fire scenarios arose in the initial phases of screening. However, most of these scenarios were screened from further study by allowing credit for operator recovery of random failures. Most of these additional scenarios involved actuation circuitry failures that could be easily recovered from

the control room. Therefore, the final number of fire areas that survived screening as well as the total fire-induced core damage frequency is similar to that found in the NUREG-1150 plants, but for different reasons associated with plant-specific cable configurations at LaSalle.

For specific fire scenario contributions to core damage frequency, refer to Table 3.1. The event sequences into which each of these fire scenarios is mapped is given in Table 3.2.

In Appendix F, selected portions of the uncertainty analysis output are given for each fire scenario and for the total (combined) fire-induced core damage frequency. The reader is referred to this appendix for details of each of the fire scenarios.

If one looks at the complete set of importance/uncertainty results in Appendix F, it can be seen that both random (failures not induced by the fire itself) and fire events contribute significantly at all levels of importance and uncertainty. This result comes about because the LaSalle design requires both random and fire events to occur in most core damage scenarios. Uncertainties in both groups of events are relatively equal and therefore the overall uncertainty contribution of either group is relatively equal. This result would not be anticipated for plants with less physical separation between redundant safety functions.

As a result of the application of the analytical methods applied to the LaSalle plant and to the Peach Bottom and Surry plants (NUREG-1150), fire analyses can now be performed to a level of detail equal to that used in internal event analyses. The core damage frequency results can be compared directly to the internal events results, and one integrated analysis combining the results of the internal events analysis with the fire and other external events analyses can be accomplished. This integrated analysis gives a means of directly comparing the importance of events, regardless of the analysis/analyses in which they occur.

1.0 INTRODUCTION

1.1 The LaSalle Fire Analysis

This report describes the fire analysis portion of the Level I PRA of the LaSalle County Station Nuclear Power Plant, Unit II, performed by the Risk Methods Integration and Evaluation Program (RMIEP). One of the primary purposes of the RMIEP program is to integrate internal and external event analyses using the development and application of methods to the same basic plant model. Another purpose of the RMIEP program is the representation and propagation of uncertainties in data, models, and phenomena in order to evaluate their effects upon the core damage frequency and risk. In order to satisfy the above purposes, the RMIEP fire analysis will:

1. Be consistent with the RMIEP Level I PRA internal event analyses and the other detailed external event analyses (seismic and flood) performed for the LaSalle PRA. The same event trees/fault trees and random, common mode, test, and maintenance data will be used for the initial screening as well as for final quantification of the random failures.

2. Evaluate uncertainties. Distributions will be constructed based upon data or expert judgement for the random failures, fire initiating event frequencies, fire suppression probabilities, etc., and these distributions will be propagated through the analyses.

3. Be transparent. A standard report format should enable the reader to reproduce any of the results.

4. Be realistic. Best estimate data and models will be used as much as possible. Important plant-specific failure modes will be analyzed.

5. Be comparable. The fire analysis will be directly comparable with internal event analyses due to common data, common methodology, and common level of detail and presentation of results.

After the initial RMIEP analysis had been completed, the Fire Risk Scoping Study,[1] performed by some of the same people who did the RMIEP analysis, identified several areas of unaddressed issues in fire risk studies. Some of these issues arose from the experience of performing the initial RMIEP analysis; others from the experience of other fire PRA practitioners. As described below, some of these issues were addressed in the final RMIEP analysis; others were not.

This analysis directly addresses the issues of control system effectiveness, manual fire fighting effectiveness, and adequacy of fire

barriers. The issue of seismic/fire interactions was out of the RMIEP scope, although the issue was considered in the initial planing of the project but thought to be probabilistically unimportant.

The issue of total environment equipment survival was only indirectly addressed in this analysis. This issue has two parts, the first, the effect of smoke etc. on equipment equipment and, the second, the effect of spurious operation of fire suppression systems. Neither of these issues was directly addressed in this study for the following reasons: (1) no double fire areas survived the screening analysis, (2) there are not many areas of the LaSalle plant with automatic fire suppression systems and the fire suppression system actuation is confined to the immediate vicinity of that area, (3) random faults of the fire suppression systems that could directly affect system operability were included in the internal event fault trees, and (4) floods initiated by faulty firewater system operation were included in the flood analysis described in Volume 10 of this report. The first reason implies that smoke propagation through fire barriers did not have to be investigated in any detail. Since in the screening analysis all equipment in each area was assumed to fail regardless of the specific cause, the fact that these events were probabilistically screened out implies that smoke induced failures between fire areas is not a concern at LaSalle. However, the question of delayed operation of dampers allowing some smoke propagation was not addressed in this analysis and there is some possibility for the existence of scenarios that could be important. The second reason when combined with the first implies that the propagation of fire effects which might result in spurious actuation of fire equipment in other locations was not important at LaSalle. Any effects of spurious action of the automatic suppression equipment would have to result from strictly random failure in the location of concern. These random failures, as mentioned in the third reason, were included in the internal event fault tree models. However, the specific effects, of CO_2, for example, on the diesel generators was not modeled and this is an area where more analysis could be performed. Generic Issue 57 is currently addressing this issue of total environment equipment survival.

The adequacy of analytical tools for fire was only partially addressed in this analysis. The final fire analysis was performed after the Fire Risk Scoping Study was completed and the COMPBRN III code[2] as modified in that study was used in this analysis; however, as described in Fire Risk Scoping Study much more needs to be done in this area.

1.2 Steps in the Analyses

1.2.1 Plant Walkdown and Data Gathering

The LaSalle fire analysis began with a plant visit in May 1984. This initial visit served as the basis for the initial plant information request submittal. Before the first plant visit, the fire analysis team

was briefed by the internal events systems analysts as to the general character of the accident sequences to be evaluated, safety systems, support systems, system success criteria, and critical interdependencies identified to date.

The fire team consisted of the following personnel:

PRA Project Manager (and Location Analyst) - A. C. Payne Jr.
Fire Analysis Leader - J. A. Lambright
Fire Propagation Analyst - D. A. Brosseau (ERCE, Inc.)
Fire Brigade Analyst - M. DiMacio (FirePro, Inc.)
Computer Location Analyst - S. L. Daniel
Fire Data Analyst - T. Wheelis
Fire Zone Analyst - W. Ferrell (SAIC)

During the initial walkdown, team members visited all areas of the plant. Two full days were adequate for this initial visit. At the completion of this visit, the following information had been obtained:

1. For each room or compartment, an identification of fire sources (power cables, pump motors, solvents and other transient combustibles, etc.), locations of fire barriers, fire/smoke detectors, separation of cable trains, etc., and a list of major equipment in the room.

2. Plant layout drawings which formed the basis for division of the plant into "locations," fire areas, and fire zones.

3. A brief list of key plant personnel or utility engineering/licensing personnel to be contacted later if specific questions arose.

Following the initial plant visit, a list of needed drawings and documentation was prepared and sent to the designated plant contact.

Subsequent visits to the plant were made by the fire analysis personnel to allow for identification of minor equipment locations, cable path tracing and verification, and to set up physical models for the fire propagation code (modified COMPBRN III[1]).

1.2.2 Fire Risk Assessment Methodology

Based on nuclear power plant operating experience over the last 20 years, it has been observed that typical nuclear power plants will have three to four significant fires over their operating lifetime. Previous probabilistic risk assessments (PRAs) have shown that fires are a significant contributor to the overall core damage frequency, contributing from 7 percent to 50 percent of the total (considering contributions from internal, seismic, flood, fire, and other events).

Because of the relatively high core damage contribution, fires need to be examined in detail.

An overview of the fire PRA methodology is as follows:

A. Initial Quantification (or Screening)

It is necessary to select important fire locations within the power plant under investigation that have the greatest potential for producing risk-dominant accident sequences. The objectives of location selection are somewhat competing and should be balanced in a meaningful risk assessment study. The first objective is to maximize the possibility that all important locations are analyzed, which leads to the consideration of a potentially large number of candidate locations. The second objective is to minimize the effort spent in the quantification of event trees and fault trees for fire locations that will not contribute significantly to the core damage frequency. A proper balance of these objectives is one that results in an ideal allocation of resources and efficiency of assessment.

The initial quantification analysis is comprised of the following steps:

1. Identification of the finest level of resolution of the plant into areas for which component and cable locations will be identified. These areas will be called locations and are determined in conjunction with the other external event analyses.

2. Identification of the fire zones used in the LaSalle FSAR Fire Hazard Analysis in terms of these locations. (These do not necessarily have fire-rated barriers at all points.)

3. Identification of the fire areas to be used in this analysis in terms of the fire zones or locations determined previously. (These areas have fire-rated barriers at all points, although not necessarily 3-hr rated).

4. Initial quantification of fire initiating event frequencies in terms of general plant areas.

5. Determination of accident sequences to be evaluated.

6. Mapping of all cables to associated components on the fault trees.

7. Mapping of all cable routing points and components to locations.

8. Solving the system fault trees in terms of fire areas and random failures.

9. Solving the accident sequences in terms of fire areas and random failures.

10. Initial screening of the accident sequence cut sets based on the number of fire areas and barriers needed to fail and the probability of the random failures. Credit is taken for the possibility of operator recovery of the random failures.

11. Final screening of the accident sequence cut sets based on absolute frequency using the information from steps 4 and 10 above.

Details of the initial quantification analysis are provided in Section 3.5.

B. Final Quantification

After the screening analysis has eliminated all but the probabilistically significant fire areas from the sequence cut sets, quantification of dominant cut sets is completed as follows:

1. Determine fire scenarios for the specific fire area. (This is in terms of cut sets which include components within the zone and associated randoms.)

2. Using a map of the fire area, plot the position of components and cables which are associated with the cut sets in the area and determine nodal points for definition of fire scenarios in the area.

3. Determine temperature response for each fire scenario in the area.

4. Compute component fire fragilities.

5. Assess the probability of barrier failure for all remaining combinations of fire areas.

6. Perform a fire recovery analysis including: the effects of manual response, the effects of automatic system operation, and expert judgement of effects not included in the fire analysis codes (i.e., smoke, grit, propagation through barriers, etc.).

7. Perform the final quantification and uncertainty analysis of each fire scenario.

The quantification of dominant cut sets is presented in Sections 3.6 through 3.10.

1.3 References

1. J. A. Lambright, S. P. Nowlen, V. F. Nicolette, and M. P. Bohn, "Fire Risk Scoping Study: Current Perception of Unaddressed Fire Risk Issues," NUREG/CR-5088, SAND88-0177, Sandia National Laboratories, Albuquerque, NM, December 1988.

2. V. Ho, N. O. Siu, and G. Apostolakis, "COMPBRN III - A Computer Code for Modeling Compartment Fires," UCLA-ENG-8524, University of California, November 1985.

2.0 PLANT DESCRIPTION

2.1 Plant Site and General Characteristics

The LaSalle County Nuclear Generating Station is located in the agricultural area of Brookfield Township, LaSalle County, Illinois. It is approximately 55 direct-line miles south west of Chicago and 20 miles west of the Dresden power station. The plant is on flat terrain about 220 ft. above the Illinois River channel which traverses north central Illinois some 3-1/2 miles to the north of the site.

Approximately 3060 acres lie within the site boundaries, with 2058 acres being used for a cooling lake. A pipeline corridor, consisting of 815 acres, extends north from the site to the Illinois River, which is approximately 5.0 miles north of the reactor. Human population near the site is sparse. Isolated farm homes and small groupings of houses typify the inhabited areas.

The station utilizes two single-cycle forced-circulation boiling water reactors, each rated at 3293 Mega-Watt Thermal (MWt) and designed for 3434 MWt. The gross electric output of each unit is 1122 Mega-Watt Electric (MWe); the net output is 1078 MWe from each General Electric (GE) turbine-generator.

The containment design employs the Boiling water Reactor (BWR) Mark II concept of over-under pressure suppression with multiple downcomers connecting the reactor drywell to the water-filled pressure suppression chamber. The primary containment is a steel-lined, post-tensioned, concrete enclosure, housing the reactor and the suppression pool. This primary containment is entirely enclosed in the reinforced concrete reactor building which is the secondary containment structure.

The power generation complex includes several contiguous buildings, two reactor buildings, an auxiliary building (housing the control room), the turbine building, diesel-generator buildings, the radwaste building, the service building, and the off-gas building. Other buildings such as the gatehouse, warehouses, etc., are also located in the general plant area. A lake screen house on the intake flume is located about 800 ft. east of the main building complex. A small river screen house, located on the Illinois River, provides makeup water to the cooling lake for the LaSalle County Station.

Condenser cooling for the station is provided from a perched 2058 acre cooling lake. The ultimate heat sink for emergency core cooling is a submerged point and intake flume of 458 acre-ft. capacity that underlies the cooling lake and the natural grade of the site.

2.2 Description of Plant Systems

2.2.1 Introduction

This section discusses the system descriptions and system models of the major front-line and support systems identified as important to mitigating the effects of fire-induced plant transients at power. In addition to the event trees discussed in Section 3.4, system fault trees were also developed by the internal events analysts. This study utilizes the same event trees, fault trees, and accident sequences developed during the internal events analysis to ensure consistency. The reader is directed to Volumes 4 (Initiating Events and Accident Sequence Delineation) and 6 (System Descriptions and Fault Tree Definition) of this report for more details on these analyses.

The discussion of the systems that follow includes:

1. A brief functional description of the system with reference to a simplified one-line diagram taken mainly from the LaSalle Systems Training Manual.[1]

2. Interfaces between the front-line systems and the support systems.

For detailed system descriptions and drawings that include all the modeled components, see Volume 6 of this report.

2.2.2 Main Steam System

The purpose of the Main Steam System (MSS) is threefold. It provides a steam flow path from the reactor through the containment to the turbine generator, it limits the pressure transient on the reactor in the event of an abnormal condition, and it prevents uncontrolled releases to the environs by serving as part of the primary boundary.

Figure 2.1 is a simplified flow diagram of the main steam system. The steam is conducted from the reactor vessel through four main steam lines (MSLs). The MSLs are designed to conduct steam from the reactor vessel to the turbine over the full range of power operation. There is a steam flow restrictor and an air-operated primary inboard containment isolation valve (Inboard MSIV) on each MSL through which steam must flow before reaching the containment wall. On the other side of the containment wall is a room called the steam tunnel that acts as an interface between the containment and the turbine building. Before passing through the steam tunnel, the steam must flow through the outboard primary containment isolation valve (Outboard MSIV), one on each MSL, on its way to the turbine. The four main steam lines all pass through the steam tunnel and are then tied together in the turbine building by the equalizing header.

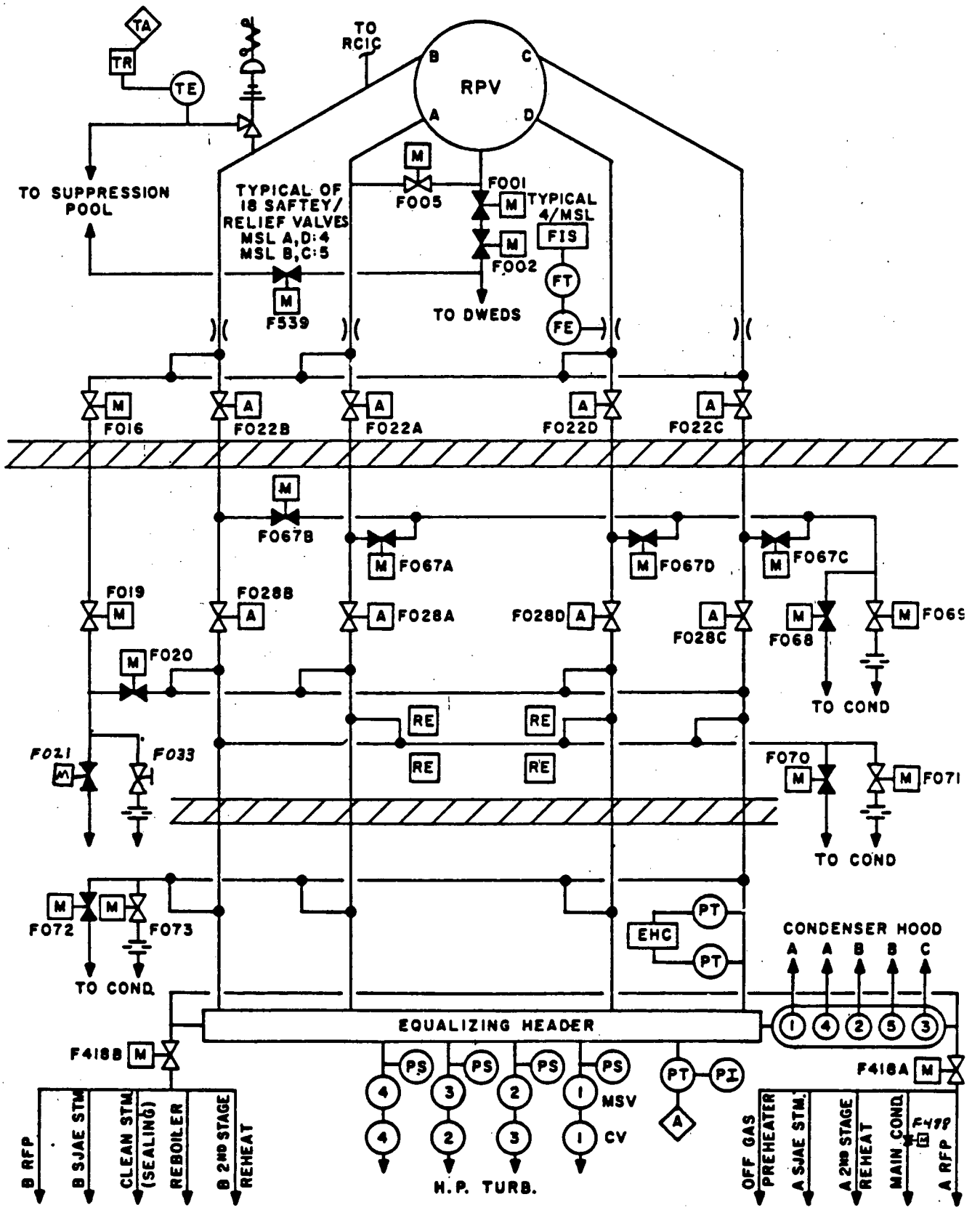

Figure 2.1. Main Steam System Simplified Flow Diagram

From the equalizing header the main steam is conducted to the loads that it serves, including the main turbine generator. In addition to the steam loads, there is a block of five bypass valves capable of passing 25 percent of rated flow to the condenser. The MSLs have drain lines that tap off both upstream and downstream sides of the MSIVs. The drain lines are directed to the main condenser. Under maintenance conditions, they may be directed to the waste collector tank. The drain lines are also utilized to equalize pressure around the MSIVs before opening them.

Safety/Relief Valves are incorporated into the system as tap offs on the MSLs upstream of the flow restrictors. These valves relieve pressure to the suppression pool where the steam can be condensed. Steam for the Reactor Core Isolation Cooling (RCIC) system and residual heat removal (RHR) steam condensing mode is supplied from the "B" MSL.

2.2.3 Main Feedwater System

The purpose of the reactor Main Feedwater (MFW) system is to deliver condensate from the condensate booster system to the reactor to maintain the desired water level over the full range of reactor power operations. The system is not required to effect or support a safe shutdown of the reactor or to perform in the operation of the reactor safety features.

The MFW system provides the reactor with feedwater at a minimum pressure of 1000 psia from the feedwater pumps. The system has sufficient capacity to provide at least 115 percent of the feedwater required for reactor rated flow. The feedwater heaters (including the LP heaters) provide the reactor with the required feedwater temperature. The final feedwater temperature is 420°F.

Figure 2.2 depicts a simplified flow diagram of the MFW system. The condensate booster system supplies net positive suction head (NPSH) for the feed pumps. Two steam turbine-driven feed pumps and one motor-driven feed pump increase pressure for the return to the reactor. Two, 50 percent capacity, high-pressure feedwater heaters increase feedwater temperature to 420°F. The feedwater splits into two lines before penetrating the primary containment.

A motor-operated valve and a check valve on each line entering the containment, located outside the containment wall, serve as primary containment isolation valves. There is also a check valve inside containment on each line that serves as a containment isolation valve.

Inside the containment, each line splits into three lines, each of which penetrates the vessel to supply a section of the feedwater sparger. The startup line to the main condenser is provided to recirculate water during startup so that the condensate polishers can clean up the water.

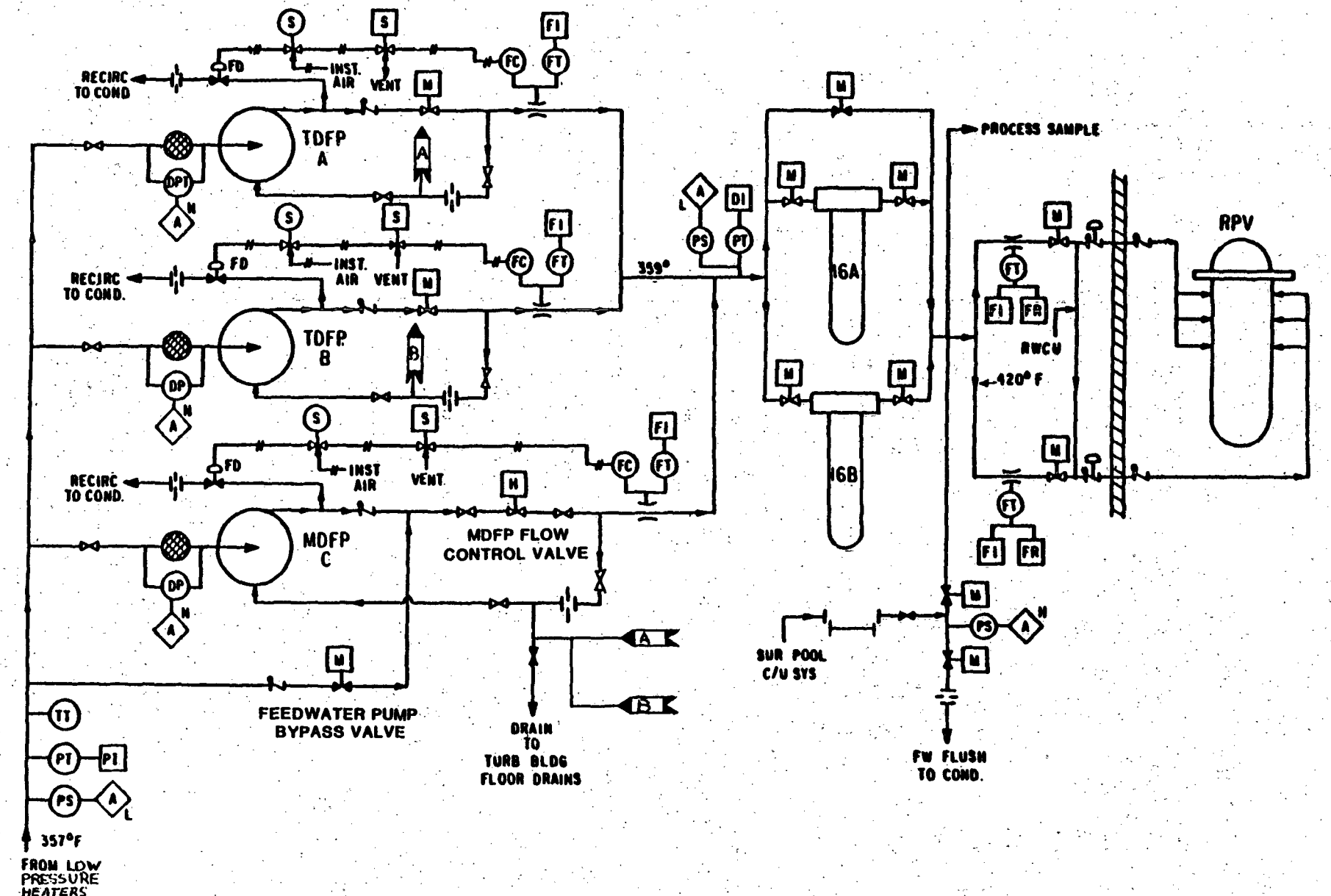

Figure 2.2. Main Feedwater System Simplified Flow Diagram

2.2.4 Emergency Core Cooling System

The purpose of the Emergency Core Cooling System (ECCS) is to maintain adequate core cooling over the entire range of operating conditions and the complete spectrum of breaks in the coolant system up to and including the Design Basis Accident (DBA), and to limit the release of radioactive materials following a Loss of Cooling Accident (LOCA) so that radiation exposures are within established limits.

The ECCS system is a combination of different systems acting together to provide core cooling. The High Pressure Core Spray (HPCS) system is designed to cool the reactor core in order to prevent the fuel cladding temperatures from exceeding 2200°F following any break in the nuclear system piping. The system is designed to pump water into the reactor over a wide range of pressures. For small breaks which do not result in rapid vessel depressurization, the system maintains the reactor water level and depressurizes the vessel. See Section 2.2.6 for a detailed discussion of the HPCS system.

The Low Pressure Core Spray (LPCS) system protects against large breaks which rapidly depressurize the vessel and is assisted by the HPCS system and Automatic Depressurization System (ADS) for small breaks. This system is used to limit the maximum cladding temperature to less than 2200°F and cool the clad to less than saturation temperature. Section 2.2.7 provides a detailed discussion of the LPCS system.

The function of the Low Pressure Coolant Injection (LPCI) system is to refill the vessel once it depressurizes. It protects against large breaks and is assisted by HPCS and ADS for small breaks. It limits the maximum cladding temperature to 2200°F and cools the clad to saturation temperature. The LPCI system is an operating mode of the Residual Heat Removal system and is further described in Section 2.2.10.

The function of ADS is to open seven selected safety-relief valves to depressurize the vessel on a small or intermediate size break in time to allow the low pressure core cooling systems to cool the core and limit fuel cladding temperatures to acceptable levels. See Section 2.2.9 for more discussion of the ADS.

The suppression pool accepts the fluid released from ruptures within the drywell. Both the suppression pool and the condensate storage tank (CST) provide a source of water for the ECCS.

The ECCS must have sufficient capacity, diversity, reliability, and redundancy to cool the reactor under all design base accident conditions. The ECCSs are capable of startup and operation regardless of the availability of either offsite power supplies or the normal operating systems of the plant. The ECCSs must ensure that actions taken to accomplish containment cooling do not interfere with the initial purpose of core cooling. The components of the ECCSs are designed to withstand

pipe whip, high temperature, high pressure, high humidity, seismic acceleration, and transient mechanical loading associated with operation. The ECCSs are designed to prevent fuel cladding fragmentation for any mechanical failure of the nuclear boiler system up to and including a break equivalent to the largest nuclear boiler system pipe. These systems provide protection by two independent, automatically actuated, redundant cooling systems, which can function without offsite power sources. The systems are designed to permit testing whenever practicable, even during normal plant operation.

2.2.5 Core Standby Cooling System

The purpose of the Core Standby Cooling System (CSCS)/Equipment Cooling Water (ECW) system is to provide component cooling support during operation of the individual ECCSs, namely, to cool the RHR heat exchangers, the ECCS and RCIC area cooling coils, the diesel generator coolers, the RHR pump seal coolers, and the LPCS pump motor cooling coils. The system also provides a source of emergency make-up water for fuel pool cooling and can provide containment flooding for post accident recovery.

To meet single failure criteria, CSCS/ECW for each unit is designed as three independent subsystems, one of which is shared between units. Strainers are provided to prevent plugging of cooled components' heat transfer passages. All strainers have provision for backwashing without significantly affecting system operations. Organic fouling of heat transfer surfaces is not expected to be a problem. However, connections and isolation valves are provided for injection and circulation of biocidal agents if marine fouling is found to occur. To detect leakage of radioactivity to the environment, radiation monitors are installed in the CSCS/ECW immediately downstream of cooled components that contain radioactive fluids. The CSCS/ECW discharge lines from the components that contain radioactive fluids are capable of remote manual isolation from the main control room.

The RHR service water portion of the system is required during all unit shutdowns to remove core residual and decay heat, and following a LOCA to provide containment cooling. The diesel generator cooling water portions of the system are required any time the diesel generators are operated or when the LPCS or RCIC pumps are operated.

The CSCS cubicle area coolers require cooling water only when the CSCS pumps are operating. These coolers supplement the normal plant HVAC in the reactor building corner rooms where these pumps are located.

Figure 2.3 depicts CSCS flow paths (this figure is for Unit 1 but is similar to Unit 2 except for the DG "OA" pump as noted below). The CSCS/ECW system provides cooling water to the RHR heat exchangers, RHR pump seal coolers, LPCS pump motor coolers, diesel generator heat

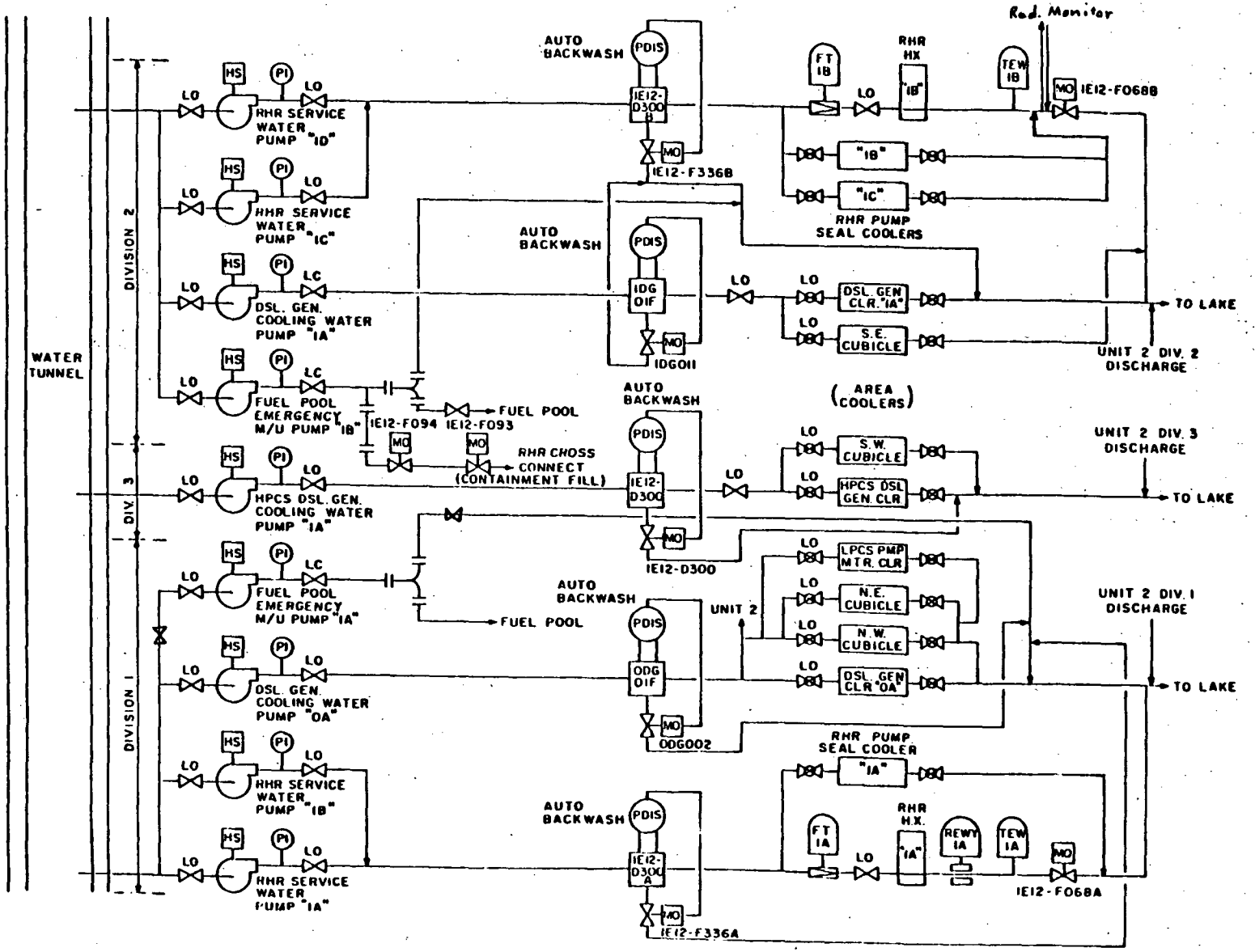

Figure 2.3. Core Standby Cooling System Simplified Flow Diagram

exchangers, and the CSCS area coolers. Lake cooling water from the CSCS pond is supplied to these components through six supply lines. These lines (three per unit) take suction off the water tunnel in the lake screen house. The water is discharged back to the CSCS pond through three discharge lines. The CSCS/ECW system also provides water for fuel pool emergency make-up and containment flooding under abnormal operating conditions.

There are nine CSCS Cooling Water pumps for Unit 1 and eight for Unit 2. One Unit 1 pump, the DG "OA" pump, is designated as a swing pump and can be used for either unit. All water is filtered by strainers prior to cooling their respective loads.

The loads of the CSCS/ECW system are broken into three divisions as follows:

Division 1: Unit 1 has four pumps, Unit 2 has three pumps.

a. RHR heat exchanger "A"
b. RHR pump "A" seal cooler
c. Diesel generator "0" cooler
d. Unit 1 and Unit 2 LPCS pump motor coolers
e. Unit 1 and Unit 2 northeast area coolers (RCIC and LPCS corner room)
f. Unit 1 and Unit 2 northwest area coolers (RHR pump "A" corner room)
g. Fuel pool emergency makeup supply "A"

NOTE: Loads c through f above are supplied by the swing pump (D/G cooling water pump "OA") located on Unit 1 side.

Division 2: Each unit has four pumps.

a. RHR heat exchanger "B"
b. RHR pump "B" seal cooler
c. RHR pump "C" seal cooler
d. Diesel generator "A" cooler
e. Southeast area cooler (RHR pump "B" and "C" corner room)
f. Fuel pool emergency makeup supply "B"
g. Containment flooding supply

Division 3: One pump per unit.

a. Diesel generator "B" cooler (HPCS DG)
b. Southwest area cooler (HPCS corner room)

2.2.6 High Pressure Core Spray System

The purpose of the High Pressure Core Spray (HPCS) system is to depressurize the reactor vessel and provide sufficient water spray to

each fuel bundle in the core in order to prevent excessive fuel cladding temperatures. This applies immediately following a LOCA while the vessel is at high pressure and continues after vessel pressure has been reduced. A secondary purpose is to supply makeup water to the reactor vessel in the event of a reactor isolation and failure of the RCIC system.

The HPCS system (Figure 2.4) consists of a suction shutoff valve, one motor-driven pump, a discharge check valve, a motor-operated injection valve, a minimum flow valve, a full flow test valve to the suppression pool, two high pressure flow test valves to the condensate storage tank, a HPCS spray sparger (inside the vessel above the core shroud) and associated piping and instrumentation.

The HPCS system takes a suction from the CST and pumps the condensate into a sparger (spray ring) mounted directly in the core shroud. Spray nozzles mounted on the spargers are directed at the fuel bundles to remove decay heat following a postulated LOCA. The suppression pool is an alternate source of water for the HPCS system. The HPCS logic will switch HPCS pump suction from the CST to suction from the suppression pool upon either high level in the suppression pool or low level in the CST.

The HPCS system will initiate automatically on either high pressure in the drywell or low reactor water level. Normal power for the HPCS system is provided from the Division 3 bus. In the event of a total loss of auxiliary power, this bus is powered by the HPCS Diesel Generator. The diesel generator will automatically start on high drywell pressure, low water level, or loss of power to the HPCS bus. The HPCS bus and associated motor control centers supply power only to the HPCS system components and diesel-generator auxiliaries for reliability.

The HPCS is a high pressure, low volume system for a small line break accident. For large LOCAs, the HPCS system acts as a low pressure, high volume system. The HPCS system is of sufficient capacity to cool the reactor core once reactor vessel pressure has been reduced. Because the flow enters the reactor core from the top, depressurization of the reactor vessel and cooling of the fuel bundles begins instantly, even though the core may be partially or completely uncovered at that time.

If the core is completely covered, HPCS flow will exit the sparger and provide excess coolant inventory to assist in regaining vessel water level. The system is testable during normal plant operations and powered from Division 3 only.

2.2.7 Low Pressure Core Spray System

The Low Pressure Core Spray (LPCS) system supplies sufficient cooling water to the reactor vessel to cool the core following a LOCA. For smaller breaks, LPCS may not be able to overcome reactor pressure. If HPCS is unavailable, ADS may be required to depressurize the vessel because the shutoff head of the LPCS pump is only 440 psig.

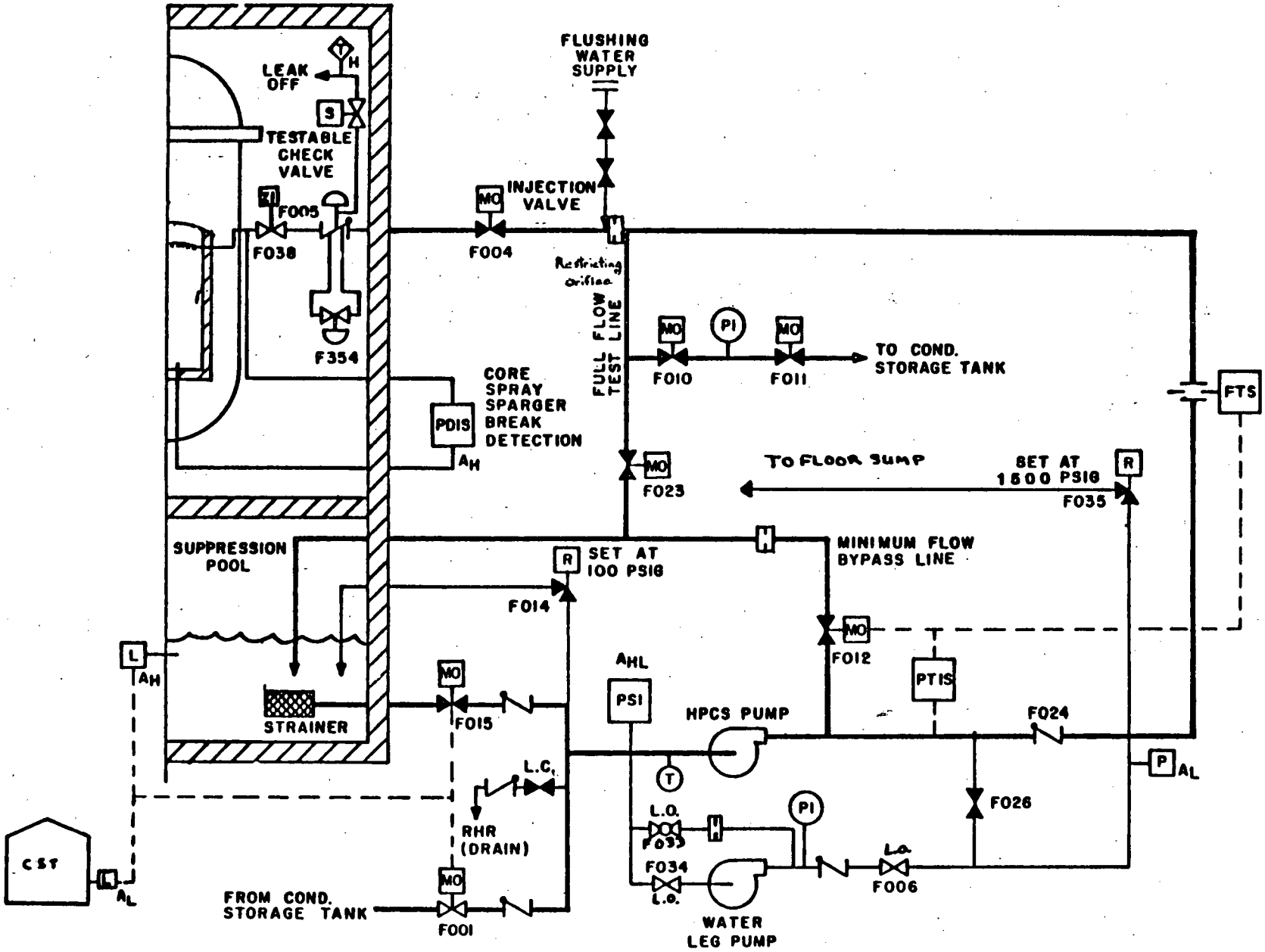

Figure 2.4. High Pressure Core Spray System Simplified Flow Diagram

Figure 2.5 is a simplified diagram of the LPCS system. In the core spray mode, water flows from the suppression pool, through the core spray pump, through the injection valve (F005) and the air-operated check valve (F006) into the vessel through the core shroud, and is then sprayed into the top of the core through the core spray spargers.

2.2.8 Reactor Core Isolation Cooling System

The Reactor Core Isolation Cooling (RCIC) system consists of a turbine-driven pump designed to maintain sufficient water in the reactor vessel to cool the core should the vessel become isolated. The RCIC turbine will operate on the reactor steam generated by decay heat and exhaust to the suppression pool. The pump will be able to supply makeup water to the reactor over a wide spectrum of reactor vessel pressures. Sources of makeup are from the cycled condensate storage tank (normal configuration), the suppression pool (backup), or the RHR Heat Exchangers (only in the Hot Standby Mode).

The system is rated seismic category 1, ASME Class 2, and will auto initiate at level 2 (-50 in.) in the reactor vessel. To ensure that either the HPCS or the RCIC system is available for core cooling during reactor vessel isolation conditions, the two systems are electrically and physically independent.

The system operates automatically in time to maintain sufficient coolant in the reactor vessel so that the integrity of the radioactive material barrier is not compromised. The system ensures that adequate core cooling takes place to prevent the reactor fuel from overheating in the event the reactor isolation is accompanied by loss of flow from the reactor feedwater system. The system allows complete plant shutdown under conditions of loss of normal feedwater by maintaining sufficient water inventory until the reactor is depressurized to a level where the shutdown cooling system is placed in operation. The system ensures that adequate core cooling takes place to prevent the reactor fuel from overheating in the event the reactor is isolated and maintained in the hot standby condition.

The normal steam flow (Figure 2.6) taps off of the "B" Main Steam line, passes through the two AC motor-operated isolation valves (F063 and F008) then through the DC motor-operated steam supply valve (F045). Steam flow then passes through the turbine stop and control valves, the RCIC turbine, and exhausts to the suppression pool through DC motor-operated exhaust valve (F068).

The normal water flow path takes suction from the cycled CST through the RCIC pump to the discharge line. The major flow is through a DC motor-operated injection valve (F013), two air-testable check valves (F065 and F066), through the head spray nozzle, and into the reactor vessel. The discharge line also has tap offs to the minimum flow line, full flow test

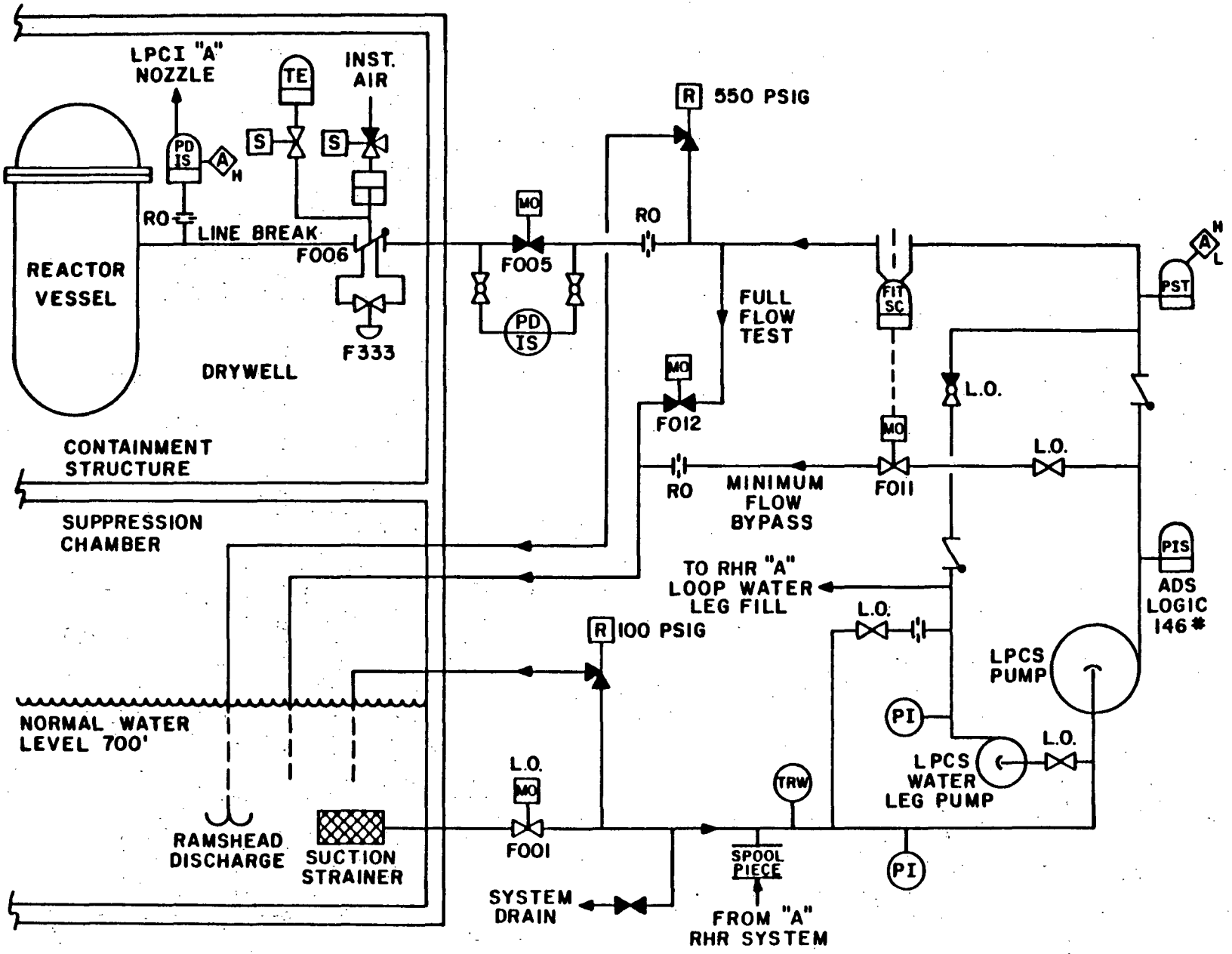

Figure 2.5. Low Pressure Core Spray System Simplified Flow Diagram

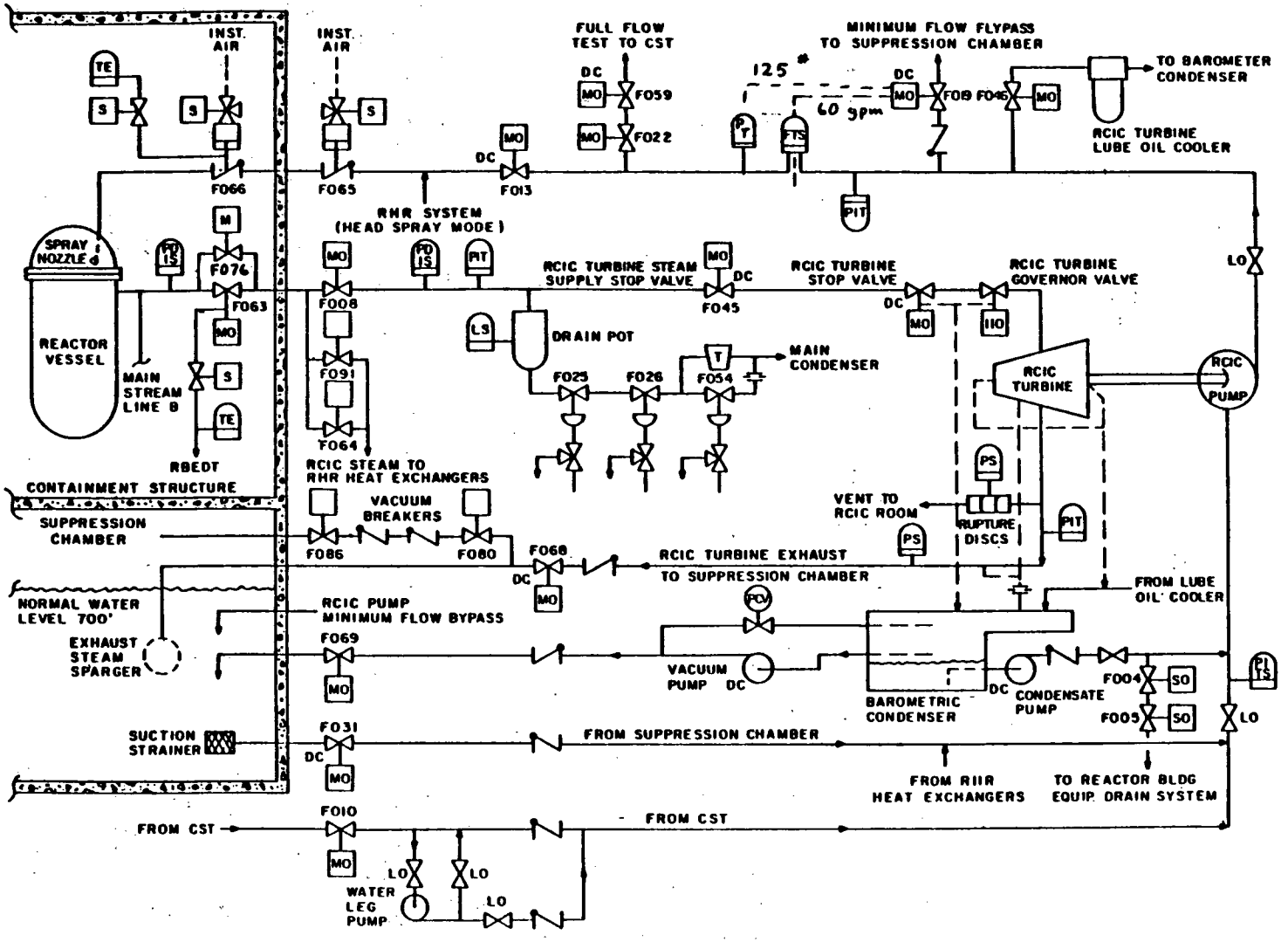

Figure 2.6. Reactor Core Isolation Cooling System Simplified Flow Diagram

line, and the RCIC turbine lube oil coolers. The full flow test flow path is essentially the same except the water returns to the cycled CST through test valves F022 and F059.

In the hot standby mode, the steam flowpath to the RCIC turbine is the same. The water flow path can take a suction from the RHR heat exchangers or the condensate storage tank and still discharge into the reactor vessel via the head spray nozzle.

An alternate flow path is the same as the normal flow path but with the pump suction lined up to the suppression pool. Suction will auto shift to the suppression pool on a low cycled CST level. An alternate water flow path is available with the RCIC pump suction lined up to the suppression pool instead of the condensate storage tank. Suction will automatically shift to the suppression pool on low CST level or high suppression pool level.

2.2.9 Automatic Depressurization System

The major purpose of the Automatic Depressurization System (ADS) is to provide automatic depressurization for small breaks in the nuclear system so that the Low Pressure Coolant Injection (LPCI) and the Low Pressure Core Spray (LPCS) systems can operate to protect the fuel barrier. ADS is part of the ECCS and acts as a backup to the High Pressure Core Spray system.

Seven of the eighteen Safety/Relief Valves (C, D, E, R, S, U, and V) are assigned to the ADS (Figure 2.7). The ADS function for each assigned valve is accomplished through the use of two solenoid-operated, three-way valves, an air accumulator and check valve arrangement. The components are arranged to ensure the valves can be opened and held open even with a simultaneous loss of the air supply. Each air accumulator is sized to contain a sufficient air volume to open the valve and hold it open against the drywell design pressure of 45 psig. The accumulators are also sized to operate their respective ADS valves two times at 70 percent of drywell design pressure following a failure of pneumatic supply to the accumulator.

The ADS accumulators are supplied with nitrogen (N_2) from the Drywell Pneumatic System. Normally the drywell pneumatic compressor is on the line providing 175 psig N_2 to the ADS accumulators. In the event that both compressors are lost, two banks of N_2 bottles provide N_2 to the accumulators when the accumulator pressure drops to 160 psig. Each bank consists of a manifold with four attached N_2 bottles. The bottles are checked periodically; both banks together are capable of operating the ADS valves for 2 hr. following the loss of the drywell pneumatic compressors.

In addition, there is an Emergency Pressurization Station in the auxiliary building in an aisle located between the auxiliary electric

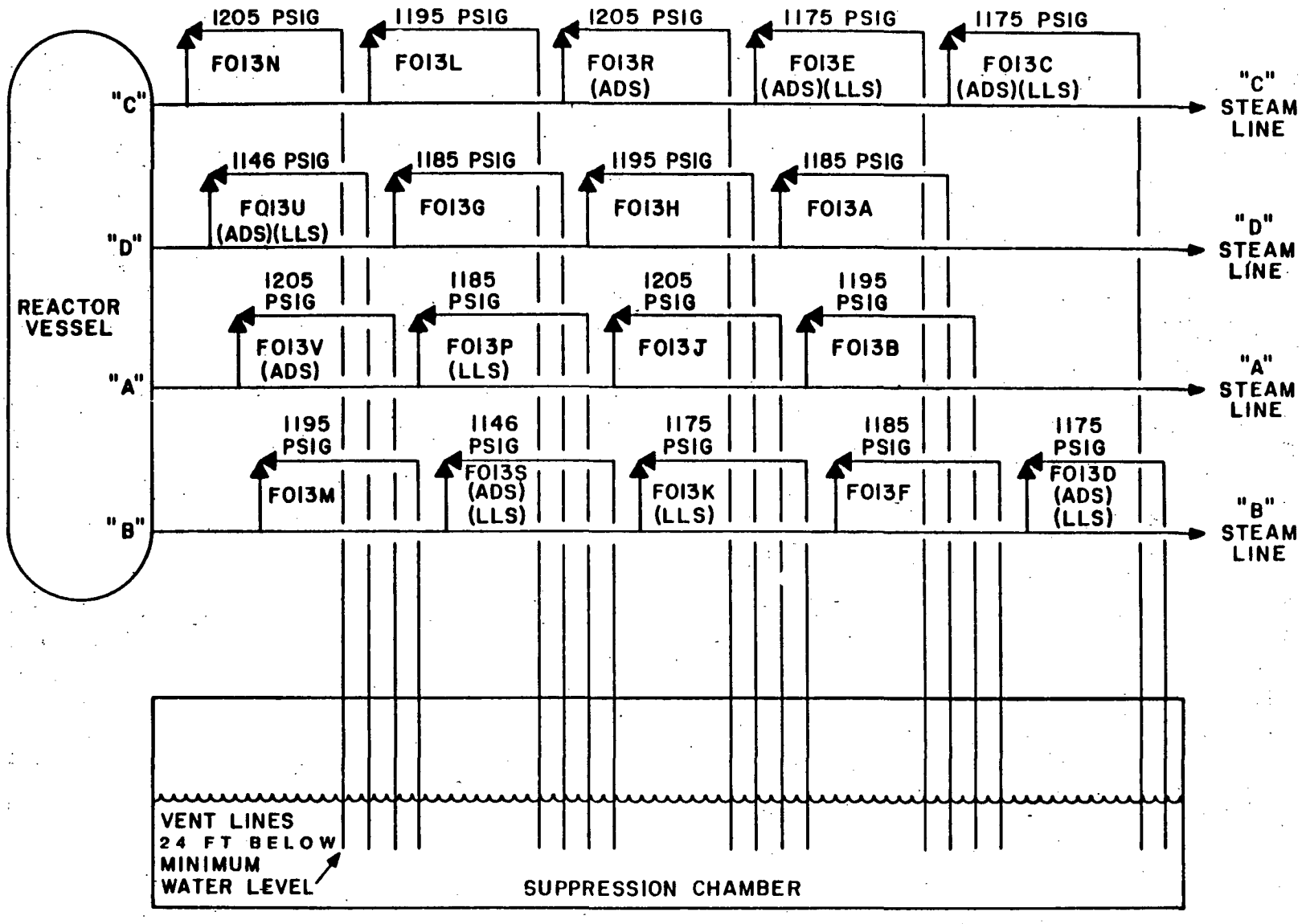

Figure 2.7. Automatic Depressurization System Simplified Flow Diagram

equipment room and the secondary containment wall. This station is provided to allow indefinite operation of the ADS valves using N_2 bottles brought to that point.

The SRV accumulators not associated with the ADS are supplied with nitrogen (N_2) from the drywell pneumatic system. However, the air supply header is not the same as the ADS air header. The SRV header (non-ADS) supplies other instrument loads in the drywell and will be isolated on a Group II isolation. There is no additional or emergency supply for the SRVs not associated with the ADS.

The ADS system has two separate initiation logic divisions (i.e, 1 and 2. The initiating signals for each division are:

a. Reactor vessel low water level, Level 1 (-129 in.)

b. High Drywell pressure, 1.69 psig

c. Confirmatory reactor vessel low water level, Level 3 (12.5 in.)

d. Sufficient low pressure core cooling pump discharge pressure, RHR A/B/C (119 psig) and LPCS (146 psig).

The reactor vessel low water level setting is selected to depressurize the vessel in time to allow the low pressure core cooling systems to perform their function assuming HPCS failed to operate. The drywell high pressure setting is selected as low as possible so as not to cause spurious ADS actuation. The signal seals in and must be manually reset in order to clear the ADS initiation circuitry.

The low pressure (LPCI/LPCS) pump discharge pressure setting is low enough to ensure at least one pump is capable of delivering rated flow, yet high enough to preclude an erroneous pump run signal.

The ADS logic is time-delayed. The time delay is set long enough to ensure HPCS has had enough time to operate, yet not so long that the LPCI/LPCS systems would be unable to cool the core.

2.2.10 Residual Heat Removal System

The purpose of the Residual Heat Removal (RHR) system is to restore and maintain the coolant inventory in the reactor vessel so that the core is adequately cooled after a LOCA. It also provides containment cooling so that condensation of the steam resulting from the blowdown of the design basis LOCA is ensured.

The RHR system is also able to supplement Fuel Pool Cooling and, with RCIC, it removes decay heat from the reactor when the reactor is isolated from the main condenser. The head spray mode allows suppression of steam

in the upper vessel dome and prevents stratification of vessel water during flooding operation.

The system can cool down the reactor to 125°F about 20 hr. after shutdown.

Figure 2.8 is a simplified composite flow diagram of the entire RHR system.

A. LPCI mode

Operating in the LPCI mode, RHR is required to flood the core before fuel cladding temperature reaches 2200°F, and then maintain water level. The LPCI mode of operation takes a suction from the suppression pool through three strainers. Separate strainers supply each LPCI pump through a normally open suction valve. All three loops have a minimum flow line, while "A" and "B" loops each have a heat exchanger and heat exchanger bypass line. Flow indication, an injection valve, and a testable check valve are provided on each loop prior to injection through the shroud into the reactor vessel.

LPCI provides protection for a large break in addition to HPCS and LPCS. It also protects during a small break after ADS or HPCS have reduced pressure to the operating range of RHR. The pumps, piping, and control systems are physically and electrically separated so that any single event, or missiles generated by a pipe rupture in the drywell, will not render all of the loops inoperable. To further ensure core cooling continuity, signals which isolate the primary containment do not operate any RHR system valves used for the LPCI mode. In addition, using the suppression pool as a source of water for LPCI provides a closed loop for recirculation of LPCI water escaping from the break.

B. Containment Heat Removal Mode

The containment heat removal mode, consisting of the suppression pool cooling system, is an integral part of the RHR system. It meets the following safety design bases:

a. The source of water for restoring reactor pressure vessel (RPV) coolant inventory is located within the containment to establish a closed cooling-water path.

b. A closed loop flow path between the suppression pool and the RHR heat exchangers is established so that the heat removal capability of these heat exchangers can be utilized.

c. This system, in conjunction with the ECCS, has such diversity and redundancy that no single failure can result in its inability to cool the core adequately.

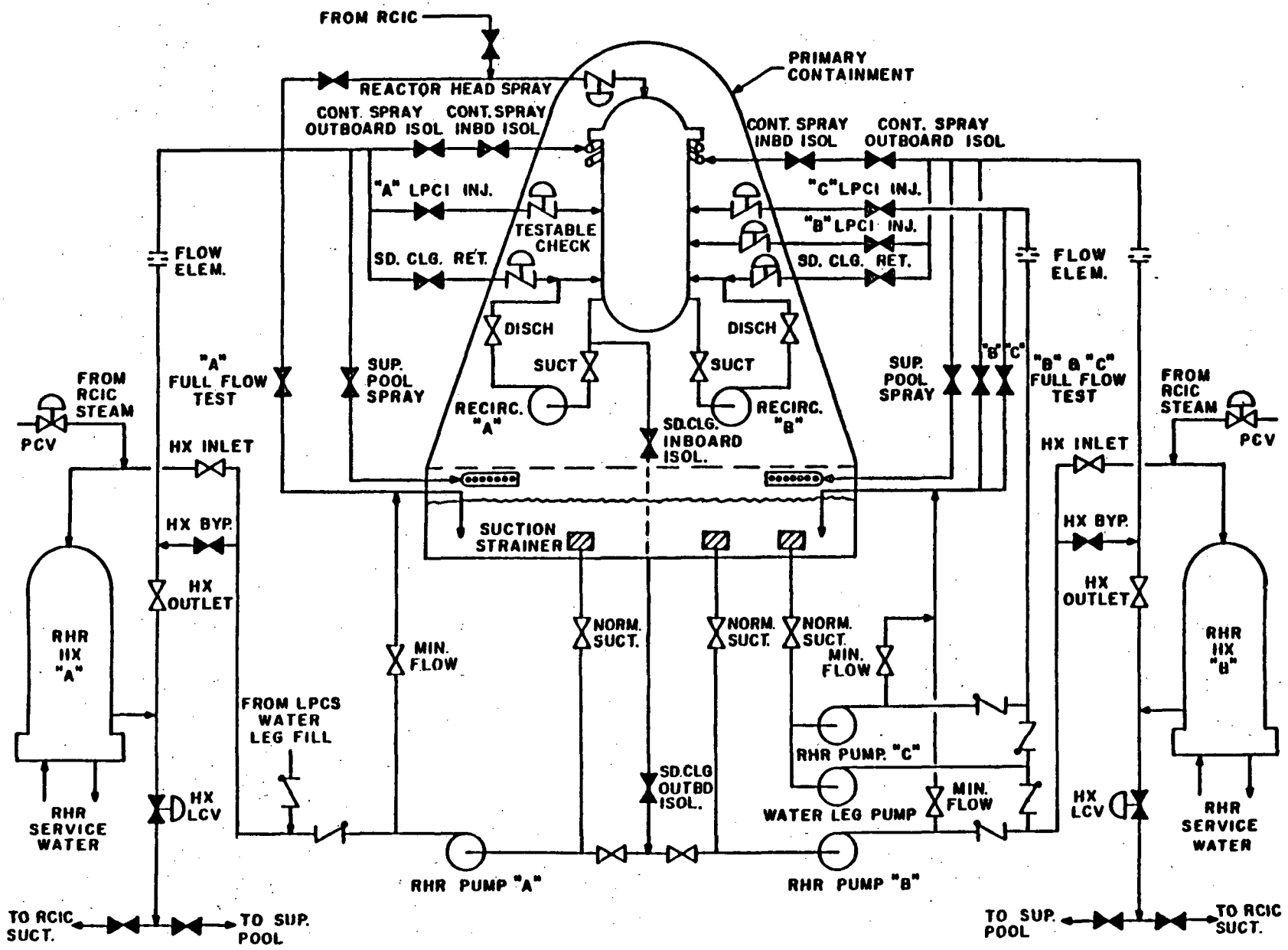

Figure 2.8. RHR System Composite Simplified Flow Diagram

d. To ensure that the RHR containment cooling subsystem operates satisfactorily following a LOCA, each active component shall be testable during operation of the nuclear system.

The suppression pool cooling mode takes a suction from the suppression pool, goes through the RHR pumps and heat exchangers, and then through the suppression pool spray header or test line to return to the pool.

C. Shutdown Cooling Mode

The shutdown cooling mode is able to complete cooldown to 125°F within 20 hr. after the rods have been inserted, and can maintain the nuclear system at or below 125°F for refueling and servicing.

The shutdown cooling suction is taken from the reactor via the recirculation loop "A" suction line, then to RHR "A" or "B" pump suctions. The water is then pumped through the respective heat exchanger, then returned to the reactor via recirculation loop "A" or "B" discharge line, or the head spray line.

D. Steam Condensing Mode

The steam condensing mode is used to handle the decay heat following reactor operation. About 1-1/2 hr. after shutdown, one RHR heat exchanger can handle decay heat, and the other exchanger can be diverted to suppression pool cooling.

In the steam condensing mode, the reactor steam from RCIC steam supply is condensed in the RHR heat exchanger. The condensate in the heat exchanger drains to either the suppression pool or to the RCIC pump suction. Noncondensibles are vented to the suppression pool. The heat exchanger water level must be increased to decrease the rate of steam condensing. As the rate of steam condensing decreases, so will the service water differential temperature.

E. Containment Spray

The containment spray mode uses the suppression pool and "A" and "B" RHR pumps and heat exchangers to supply water to the spray headers in the drywell or suppression pool. It provides an alternate means of cooling the containment. The sprays remove energy from the drywell/suppression chamber atmosphere by condensing water vapor present as a result of the occurrence of some off-normal event. Approximately 5 percent of the total pump flow can be directed to the suppression chamber spray ring to cool any noncondensible gases collected in the free volume above the suppression pool.

The heat exchanger cooling water is supplied by CSCS Equipment Cooling Water (ECW) consisting of two independent 100 percent capacity loops.

2.2.11 Primary Containment Venting

The VENT system consists of two subsystems: containment ventilation and containment inerting (Figure 2.9). The containment ventilation system is used to purge the drywell and suppression chamber air volumes before entry of maintenance personnel in order to keep their exposures within ALARA (i.e., as low as reasonably achieveable) limits. The containment inerting system is designed to maintain the containment atmosphere at less than 4 percent oxygen. If large amounts of hydrogen are generated following a postulated LOCA, the inerted containment will not have sufficient oxygen to support the combustion of hydrogen.

Under normal operating conditions, the VENT system is non-safety related. Under any accident conditions the air will be routed through the standby gas treatment (SBGT) system. The vent system is isolated from the drywell and suppression chamber during accident conditions, and a Group IV isolation condition.

Primary containment venting is accomplished as a special procedure whereby isolation interlocks are defeated in the following order when containment pressure approaches 60 psig: (1) wetwell vent/purge valves VQ032 and VQ040 opening a 2" relief path, (2) drywell vent/purge valves VQ035 and VQ036 opening another 2" relief path, (3) wetwell vent/purge valve VQ031 opening a 26" relief path (limited to 18" by SBGTS pipe), and 4) drywell vent/purge valve VQ040 opening another 26" relief path (connected to the same 18" pipe as in 3). Containment atmosphere is than vented using the SBGT or the primary containment purge exhaust fan.

The SBGT system is an engineered safety feature (ESF) system. Its purpose is to reduce halogen and particulate concentrations in gases:

a. Leaking from the primary containment following a LOCA, or

b. potentially present in the secondary containment following a fuel handling accident.

By fulfilling the above purpose, off-site doses are limited to the guidelines of 10CFR100.

The system also controls the cleanup of fission products from the containment following an accident.

The SBGT system (Figure 2.10) consists of two identical filter trains and interconnecting ductwork. The individual trains are available to each reactor building. Either train by itself is capable of exchanging both reactor building air volumes once in a 24-hr. period. The system

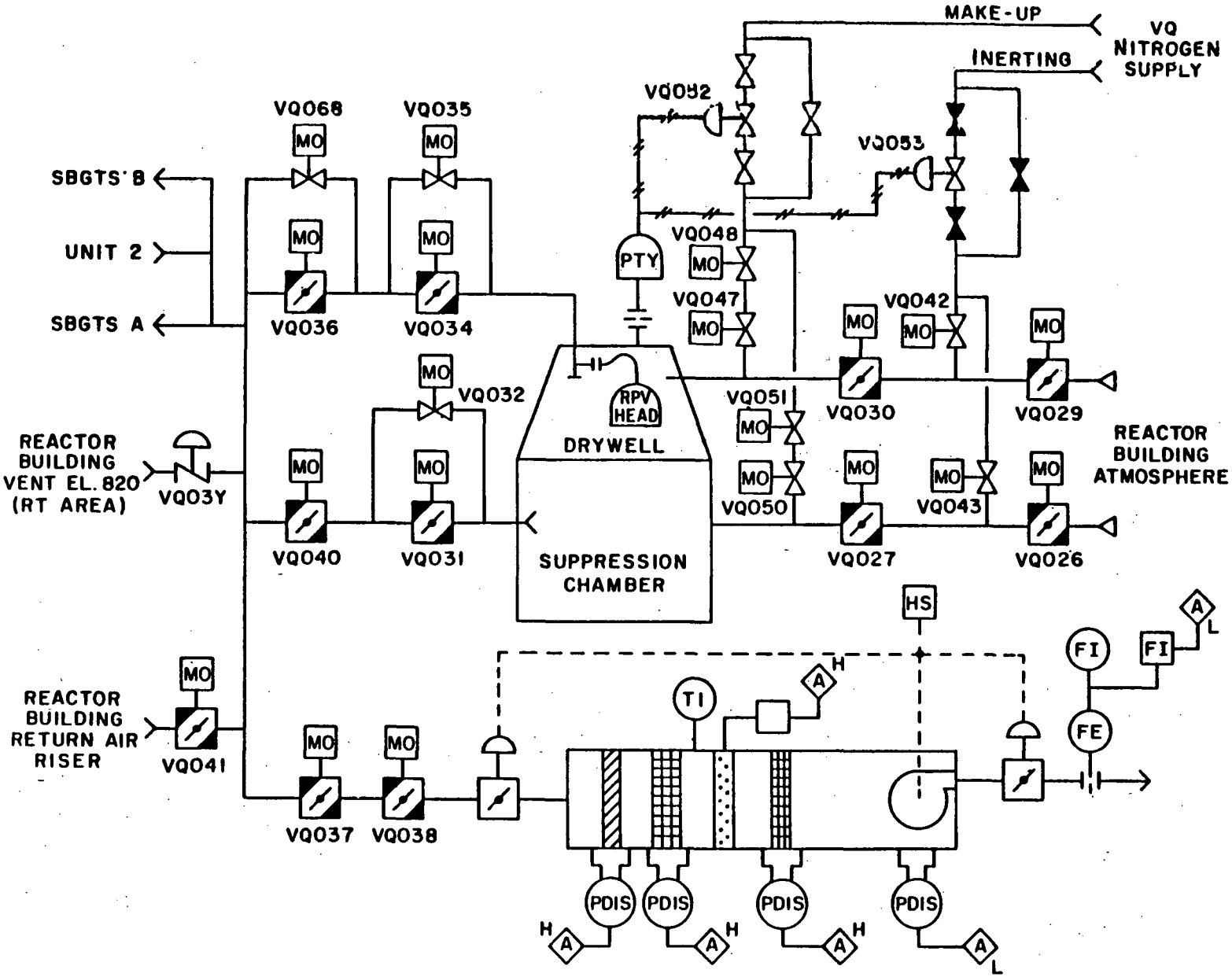

Figure 2.9. Primary Containment Vent and Purge System Simplified Flow Diagram

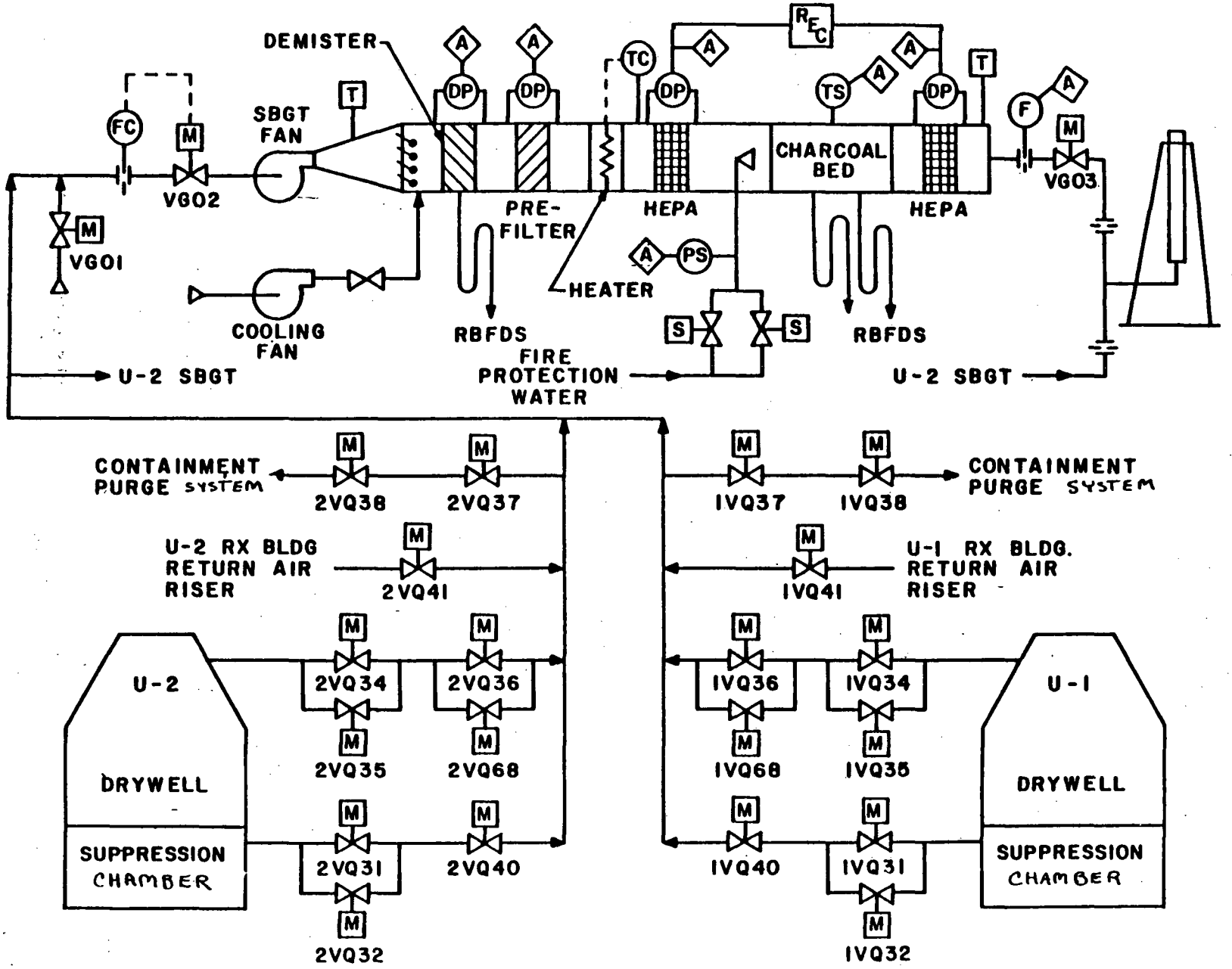

Figure 2-10. Standby Gas Treatment System Simplified Flow Diagram

maintains a slightly negative internal building pressure and processes all gaseous affluent prior to its discharge via the station vent stack.

All SBGT equipment is powered from the ESF buses and is started automatically or manually from the control room. Each filter train consists of a flow control valve, supply fan, cooling fan, demister, prefilter, electric heater, HEPA filter, charcoal adsorber bed, HEPA afterfilter, and outlet valve. Each train can process air from the following locations of either unit:

a. Drywell and reactor vessel head vent
b. Suppression pool chamber
c. Reactor building return air riser
d. Reactor building atmosphere at the 820-foot level.

2.2.12 AC Electrical Distribution System

The purpose of the AC electrical distribution system is to provide control and protection to electrically powered auxiliary equipment while distributing the needed power to these loads. The AC electrical distribution system provides power during startup, power operation, and shutdown.

The system is designed to provide: (1) a highly reliable source of power to plant loads that are necessary for electric power generation or are important to nuclear safety; (2) an electrical isolation and physical separation of redundant ESF power supplies; and (3) a system of rapid automatic detection and isolation of electrical faults. Figure 2.11 is a general schematic of the AC distribution system.

The electrical output from the LaSalle County Station is produced by two main generating units, designated as Unit 1 and Unit 2. Each main generator is directly connected to two main power transformers through isolated phase bus ducts. The main power transformers are connected in parallel and transform the 25 kV output voltage of each generator to a nominal 345 kV transmission system voltage. Each main power transformer (TR1E or TR1W) associated with a main generator is rated at approximately one-half of the generator capacity. The output of each main power transformer is connected to the 345 kV switchyard.

The switchyard consists of ten oil circuit breaker (OCB) disconnect switches, ten bus sections, and associated equipment arranged in a double ring bus configuration (Figure 2.12). Two overhead 345 kV transmission lines distribute power from each ring to various locations throughout the transmission system.

The 345 kV ring buses, which are continuously energized, serve as the preferred power source for the station's safety loads. Each 345 kV ring bus provides two redundant power sources from the transmission system to

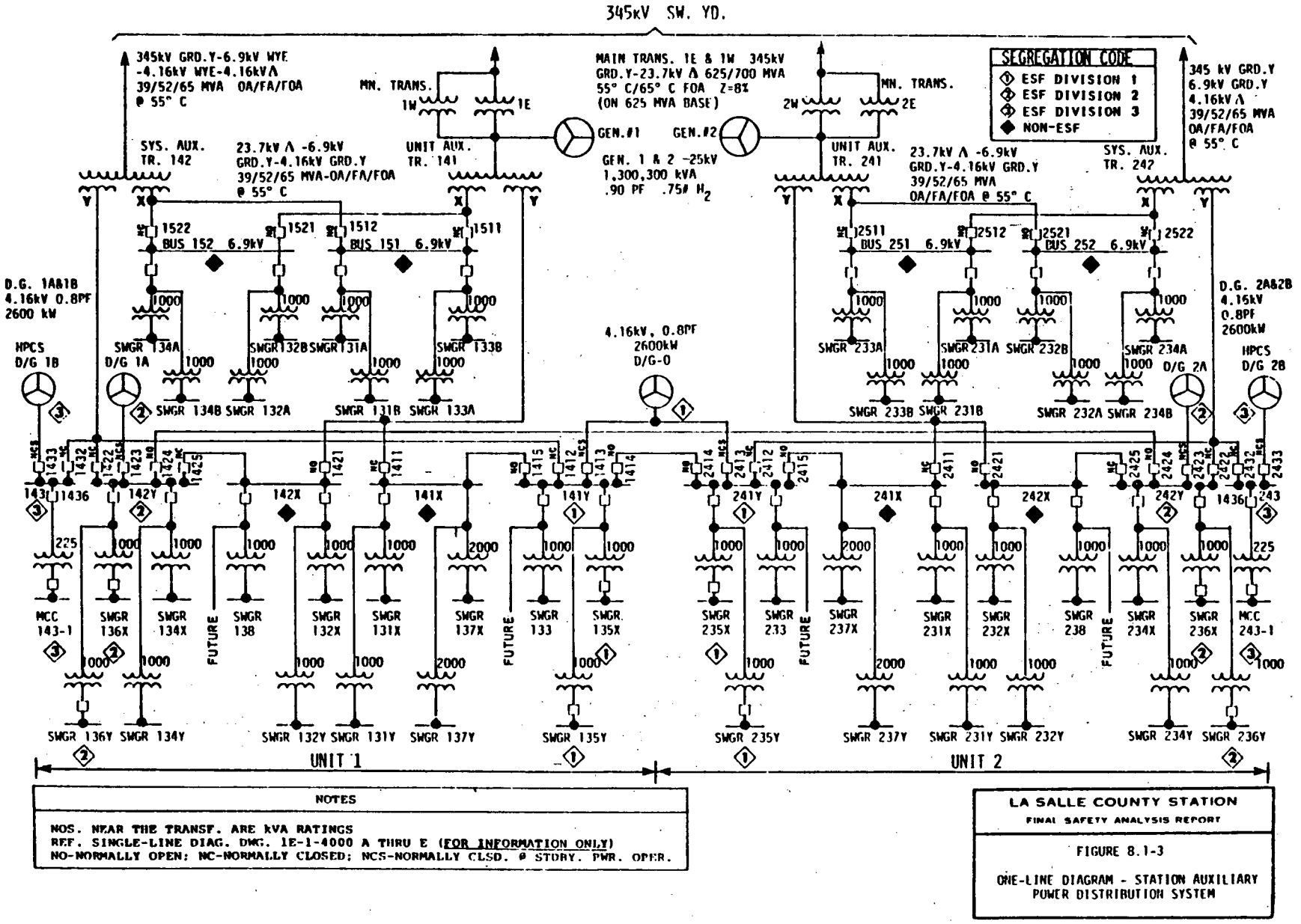

Figure 2.11. **AC Distribution System Simplified Diagram**

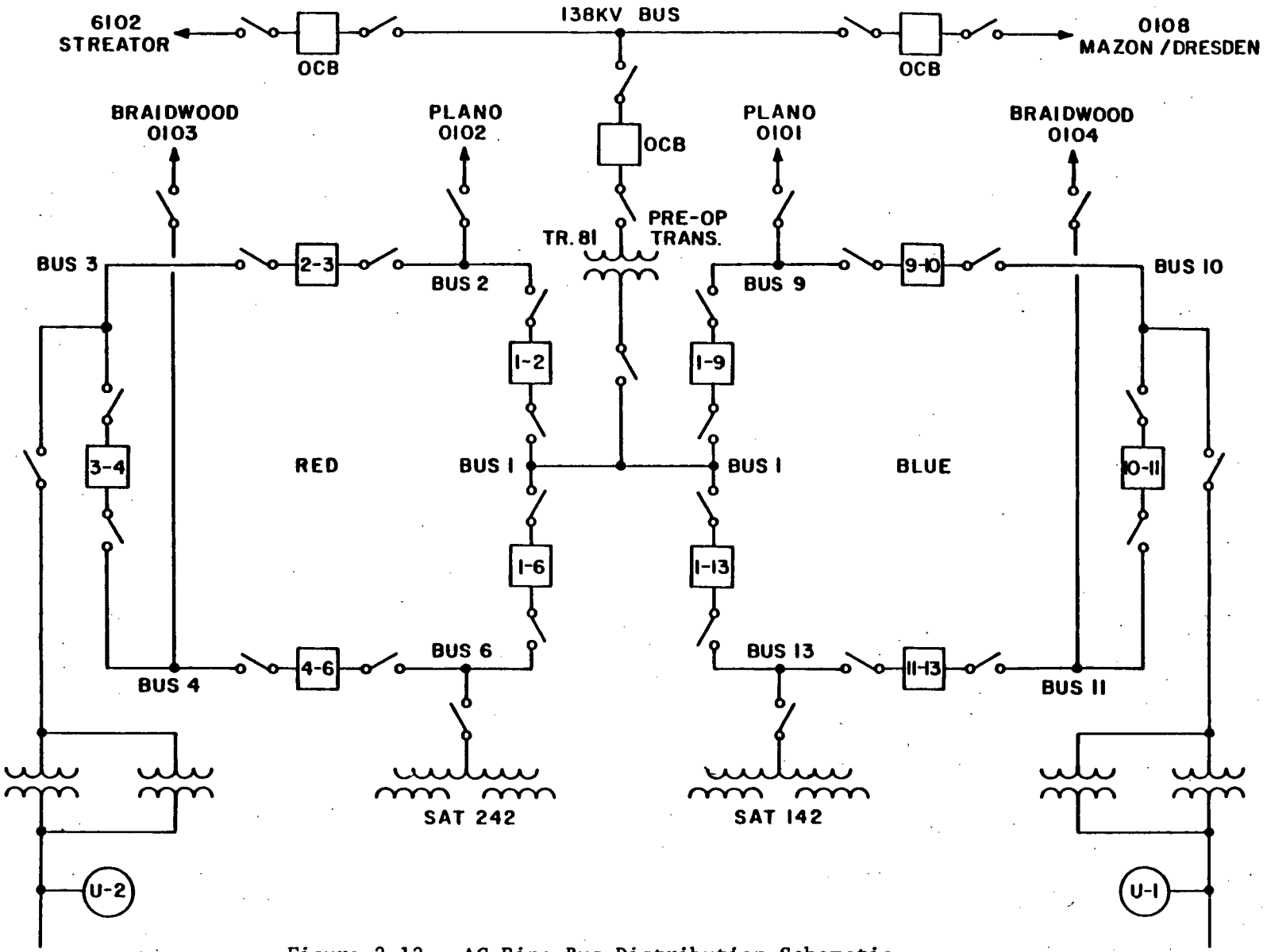

Figure 2.12. AC Ring Bus Distribution Schematic

the two system auxiliary power transformers. Each Unit's system auxiliary transformer (SAT) has sufficient capacity to handle the auxiliary power requirements of one reactor plant. Each of these auxiliary power supplies is available, through circuit breaker switching, to Division 1 and 2 ESF equipment of both reactor plants and therefore serves as a redundant off-site supply for essential auxiliary power.

A full-capacity UAT is provided for each unit. The UAT is connected directly to the Main Generator output and is capable of supplying all auxiliary power during normal operation. When the main generator trips, switch groups fed from the UAT automatically transfer to the SAT. When the SAT trips, its switch groups transfer to the UAT except for bus 143 (243) which is picked up by the "B" DG. In addition, removable links are provided in the main generator leads, which can be removed to allow backfeeding the main transformer. This makes the unit auxiliary transformers (UAT) available as a third source of offsite power when the main generators are unavailable.

The Class 1E power system is designed so that any design basis event (DBE) will neither cause a loss of electrical power to a sufficient number of ESFs, surveillance devices, or protection system devices to jeopardize the station, nor cause a loss of a sufficient amount of equipment to result in a reactor power transient capable of causing significant damage to the fuel or reactor coolant system.

To achieve a Class 1E power system design, all ESF equipment is divided among the three divisions of the unit's Class 1E AC power system switchgear. In the event of a total loss of offsite and main auxiliary power, the auxiliary power required for safe shutdown is supplied from the diesel generators (DGs). Two ESF groups (Divisions 2 and 3) are supplied by the Unit DGs while the third group (Division 1) for each unit is supplied by the shared (0) DG. With this arrangement of physically and electrically independent loads and power supplies, the total loss of any one ESF Division cannot prevent the safe shutdown of the reactor. Non-Class 1E equipment may also be supplied from Class 1E buses provided the Class 1E systems are not degraded.

2.2.13 DC Electrical Distribution System

The DC distribution system is divided into Class 1E and Non-Class 1E systems. Class 1E is the safety classification of the electric equipment and systems that are essential to the emergency shutdown of the reactor, containment isolation, reactor core cooling, containment and reactor heat removal, or otherwise essential in preventing significant release of radioactive material to the environment.

Class 1E DC systems are the Unit 250 V DC system (Figure 2.13) and the Unit 125 V DC systems (Figures 2.14, 2.15 and 2.16), ESF Divisions 1, 2, and 3.

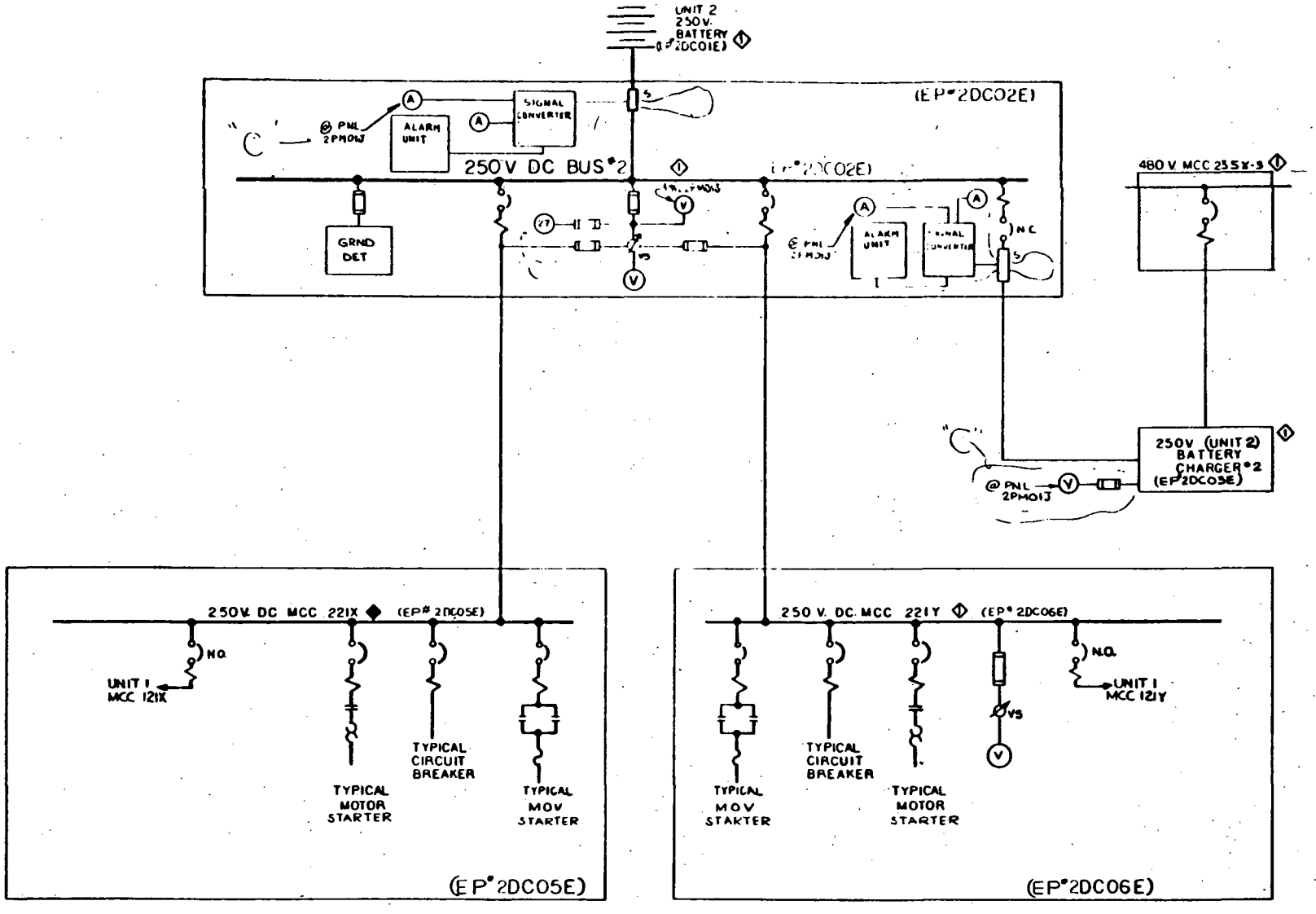

Figure 2.13. 250 V DC System Simplified Diagram

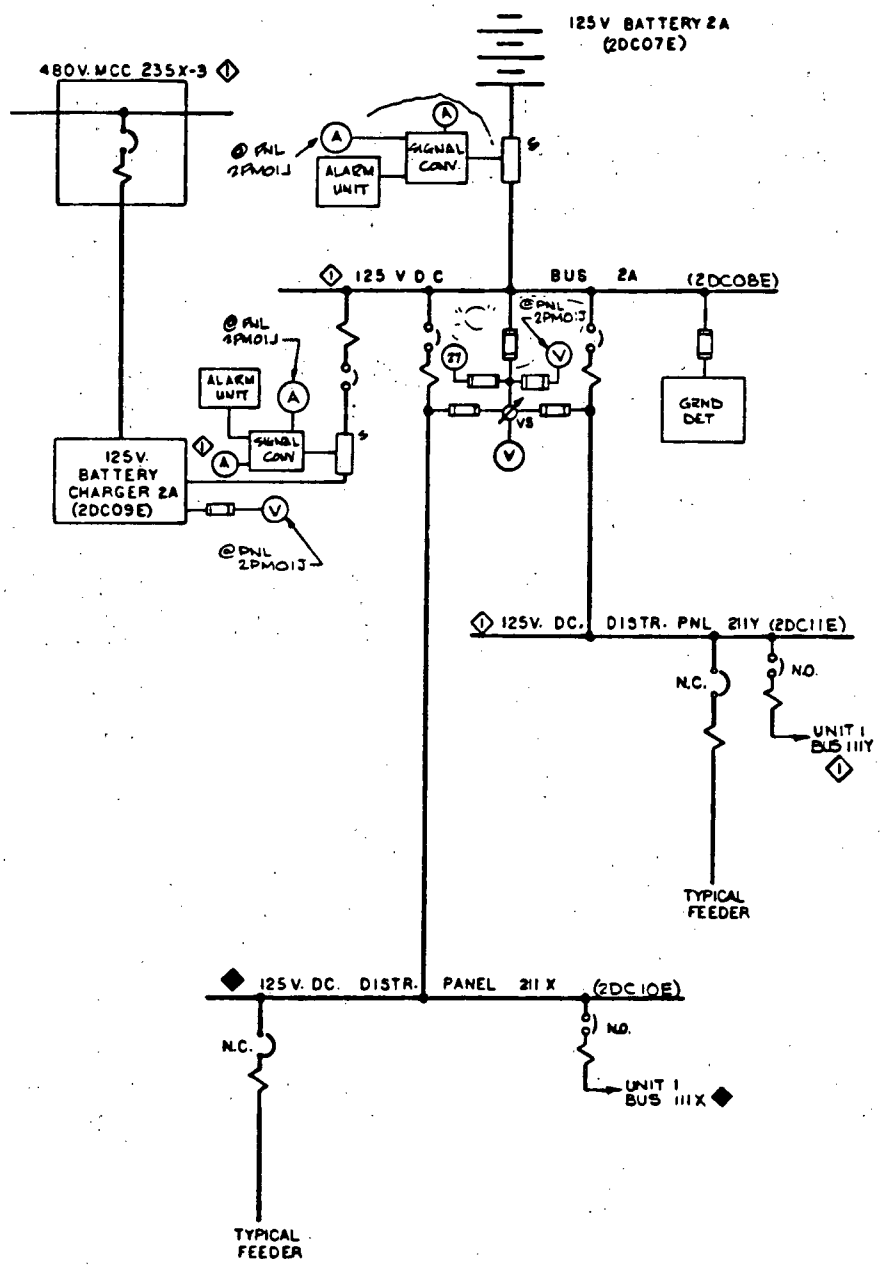

Figure 2.14. 125 V DC ESF Division 1 Schematic

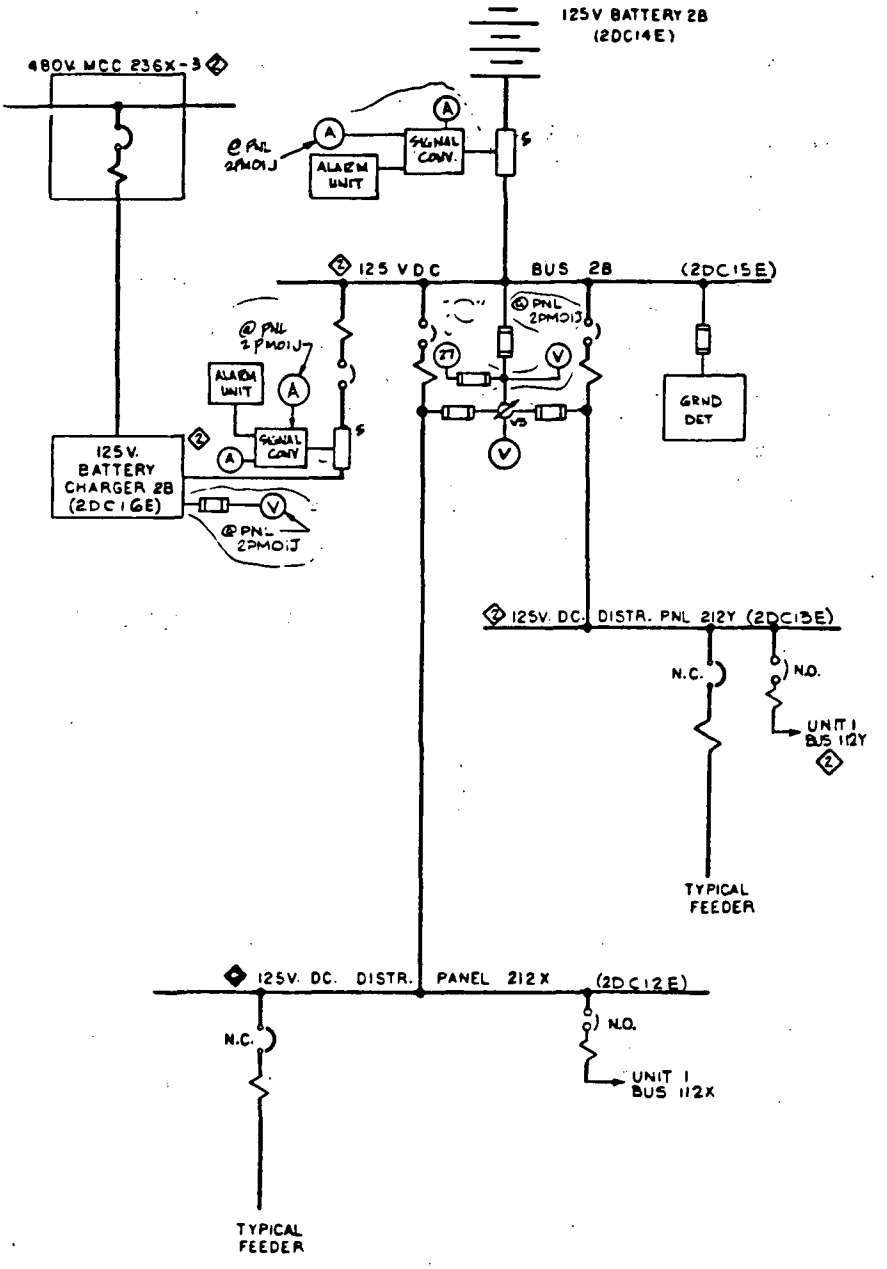

Figure 2.15. 125 V DC ESF Division 2 Schematic

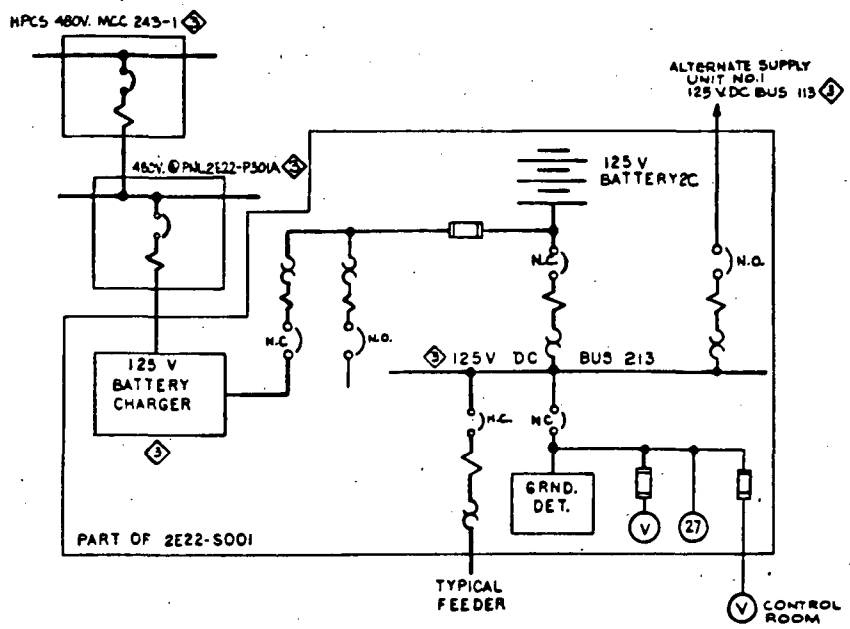

Figure 2.16. **125 V DC ESF Division 3 Schematic**

The purposes of the Class 1E systems are to provide control power for both normal and emergency operation of plant equipment and to provide power for automatic operation of ESF protection systems during abnormal and accident conditions. The 250 V DC system provides power to the turbine emergency bearing oil pumps, generator emergency seal oil pumps, backup feed to the computers, and the RCIC system.

The Class 1E DC systems are designed so that no DBE will cause a loss of electric power to a sufficient number of ESFs, surveillance devices, or protection devices to jeopardize the safety of the station, and so that no DBE will cause a loss of electric power to equipment that could result in a reactor power transient capable of causing significant damage to the fuel or to the reactor coolant system. The systems shall be capable of performing their intended function when subjected to the effects of any DBE. Variations in voltage and frequency during a DBE shall not degrade the performance of any load to the extent of causing significant damage to the fuel or reactor coolant system. Class 1E power equipment shall be physically separated from its redundant counterpart as required to prevent the occurrence of a common failure.

A. 250 V DC System (Figure 2.13)

1. Battery:

   The 250 V battery consists of 120 lead-acid cells mounted on four racks of 30 cells each with a capacity of 498 amp-hr. based on an 8-hr. discharge. The battery is located on the ground floor of the auxiliary building in a ventilated room with concrete walls.

2. Battery Charger:

   A full wave, regulated, silicon-controlled rectifier-type charger is used. The charger alone is capable of supplying all DC loads during any mode of operation in addition to restoring the battery to full charge. It is sized to carry the maximum coincidental load plus the battery charging load required to fully charge the battery following an 8-hr. rated discharge.

   The charger is powered from ESF Division 1, 480V MCC 235X-3. The main supply breaker will open if the DC output voltage rises to 15 percent above the battery float voltage to provide for battery overcharging protection. Low AC voltage into the charger or low DC voltage out of the charger causes alarms in the control room.

3. Distribution:

   The 250 V DC Bus No. 2 connects the battery and charger to distribute power to the two DC MCCs (221X, 221Y). There is no circuit breaker between the battery and the bus so the battery is

always connected to it. The bus receives power from the charger through the charger feeder breaker. If this feeder breaker trips open, it will alarm in the control room. If either circuit breaker for Bus 221X or 221Y trips, it also will alarm in the control room. Bus voltage is monitored on the 2PM01J panel.

The 250 V DC MCC 221X is a nonClass 1E bus with a crosstie to Unit 1 MCC 121X. The crosstie breaker is normally open and will alarm in the control room when closed. DC power systems are ungrounded and for this reason ground detectors are used. The detector is the recording type and low ground readings will cause an alarm in the control room.

The 250 V DC MCC 221Y is a Class 1E bus. It has a crosstie to Unit 1 MCC 121Y that is also normally open. If the crosstie breaker is closed, it will alarm in the control room. The ground detector is similar to that on Bus 221X.

4. Operation

The primary source of power for the 250 V DC system, as well as the other DC systems, is the battery charger. If the charger is out of service, the battery is the source of power. The battery is sized to start and carry the normal DC loads plus all DC loads required for safe shutdown and for switching operations required to limit the consequences of a design basis event for a 4-hr. period following a loss of all AC power. Normally, the battery and charger operate in parallel with the battery in a "float-charge" configuration. The charger is supplied by 480 V AC power from a Division 1 ESF bus. Power can be supplied by either offsite power or on-site diesel generators.

B. 125 V DC Power System (Figures 2.14, 2.15, 2.16)

The 125 V DC system is comprised of three independent systems. Division 1 supplies panels 211Y and 211X; Division 2 supplies panels 212Y and 212X; and Division 3 supplies panel 213 (HPCS).

1. Each battery consists of 60 cells mounted on four racks of 15 each. Division 1 and 2 capacity is 581 amp-hr. based on an 8-hr. discharge. Division 3 has a 414 amp-hr. capacity also based on an 8-hr. discharge. The batteries are located in separate ventilated rooms similar to the 250 V DC systems. Minimum discharge level of the battery is 1.75 V per cell. The Division 1 battery is located in the auxiliary building on the ground floor in the Division 1 switchgear room. Division 2 is in the auxiliary building mezzanine floor in the Division 2 switchgear room. Division 3 is in the auxiliary building upper basement in the HPCS switchgear room.

2. The battery chargers are similar to the 250 V DC chargers discussed earlier. There is one charger for each battery and one spare charger onsite as a replacement, if needed. Division 1 battery charger is supplied from 480V MCC 235X-3, Division 2 charger from 480V MCC 236X-3, and Division 3 charger from 480V MCC 243-1.

3. Distribution:

   Division 1 and 2 125 V DC systems are similar. Bus 2A (2B) receives power from either the charger or the battery and distributes power to the ESF bus and Non-ESF bus. Division 1 buses are 211Y (ESF) and 211X (Non-ESF). Division 2 buses are 212Y (ESF) and 212X (Non-ESF). Cross-ties are provided from the corresponding Unit 2 buses for maintenance functions only. Ground detectors are identical to those used in the 250 V DC system. Division 3 has only one bus, 213 (HPCS only). The battery and charger can be isolated from this bus. There is a crosstie to bus 113 of Unit 1. The ground detector is a recording type with alarms similar to others discussed.

4. Operation:

   Normally, power to all 125 V DC buses is from their respective charger. The charger can be powered from the offsite grid or from onsite emergency diesels for each ESF division.

   The batteries are sized to start and carry normal DC loads for 4 hr. following a loss of all AC sources, plus all DC loads required for a safe shutdown, and loads required for switching operations required to limit consequences of a design basis event. Control room alarms are provided to supervise the operation of the system.

2.2.14 Condensate System

The purpose of the Condensate System (CDS) is to provide a means of purifying and transferring water from the condenser hotwell to the suction of the reactor feed pumps. In addition, the flow of condensate serves as the cooling medium for the steam jet air ejector (SJAE) condensers, the gland exhaust condenser, and the off-gas condensers.

The condensate system removes condensate from the main condenser hotwell and pumps the water through a series of components to provide 63% of the total condensate flow arriving at the reactor feed pump's suction. The remaining 37% of the condensate flow is supplied by the heater drain system.

Figure 2.17 is a simplified diagram of the condensate system flow paths showing the major components. The condensate is removed from the main

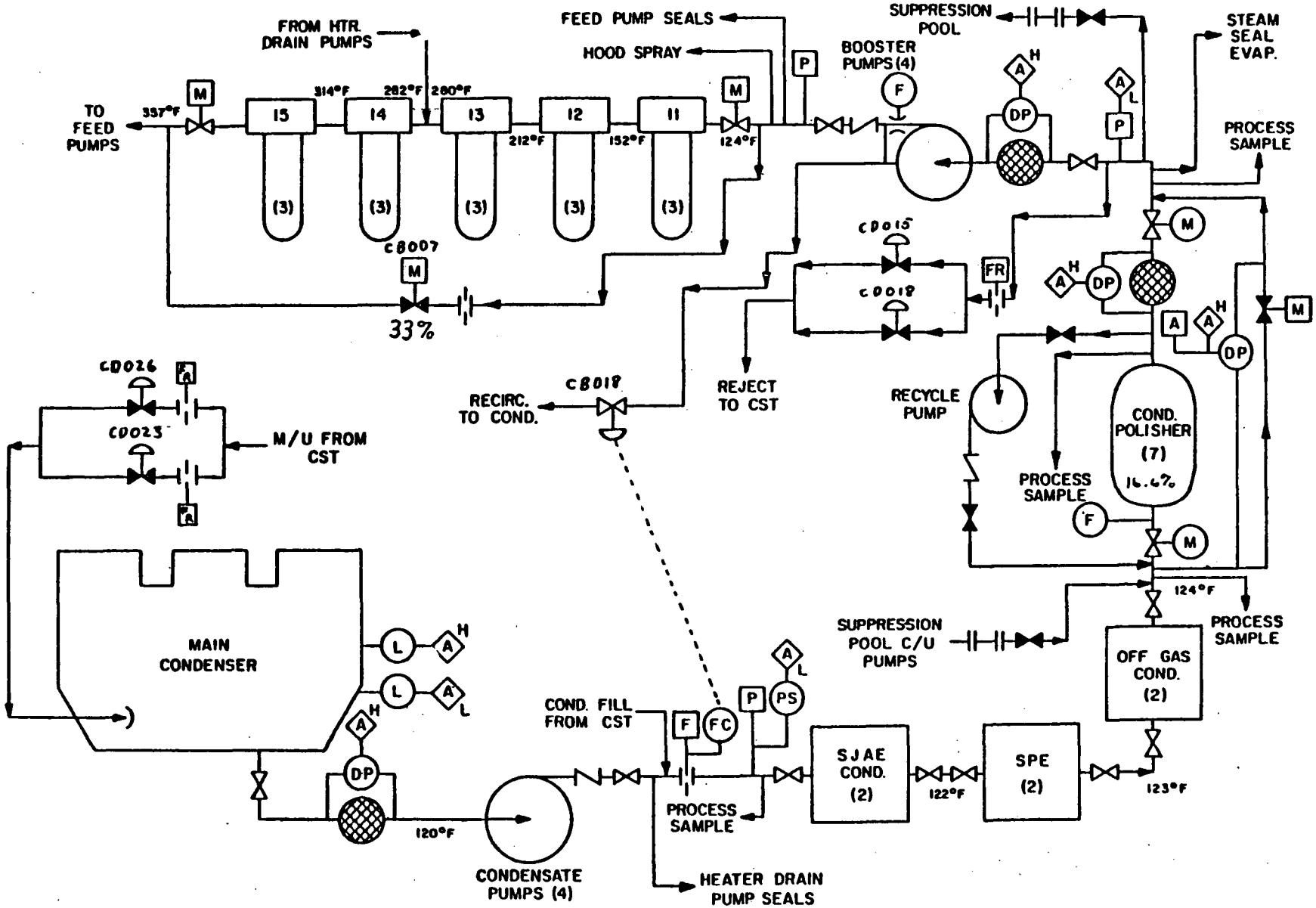

Figure 2.17. Condensate System Simplified Diagram

condenser and pumped by the condensate pumps through the following components to the reactor feedwater pumps: (1) condensate pumps [4], (2) SJAE condensers [2], (3) gland seal condensers [2], (4) off-gas condensers [2], (5) condenser demineralizers [7], (6) condensate booster pumps [4], and (7) low pressure heaters [3 strings, 5 heaters per string]. Flow then goes to the feedwater pumps or through the bypass line directly to the reactor.

The four condensate pumps each have a capacity of 33% and a design flow rate of 7270 gpm at 150 psig. Each pump is an 1800 rpm pump sharing a motor, via the shaft speed changer, with a corresponding condensate booster pump. Three pumps are required for full power operation with the fourth in standby. The four condensate booster pumps each have 33% capacity and provide NPSH for the reactor feedwater pumps. The booster pump speed is 3600 rpm with a flow rate of 7270 gpm at 410 psig.

For continued operation under accident conditions when water is not being recirculated, makeup can be delivered via the condensate makeup system. This system takes water from the CST and delivers it to the main condenser at a maximum rate of 1800 gpm.

2.3 References

1. Commonwealth Edison Company, "LaSalle Systems Training Manual," Commonwealth Edison Company, Chicago, Il, February, 1985.

3.0 LASALLE FIRE ANALYSIS AND QUANTIFICATION

3.1 Introduction

The objective of this analysis was to estimate the contribution of fire-induced events to core damage and plant damage state frequencies. The overall fire-induced core damage frequency for LaSalle Unit 2 was calculated to be 3.21E-5 per year. The various fire area contributions are given in Table 3.1. The accident sequences these scenarios mapped into are listed in Table 3.2.

As discussed in Section 1.2.2, an overview of the fire PRA methodology consists of the steps discussed below:

A. Initial Plant Visit

Based on the internal event, seismic, and flood analyses, the general location of the mechanical components of the systems of interest is known. The plant visit provides the analyst with a means of seeing the physical arrangements in each of these areas. The analyst has a fire area checklist to aid in the screening analysis and in the quantification step. The second purpose of the initial plant visit is to confirm with plant personnel that the documentation being used by the analyst is, in fact, the best available information and to get clarification about any questions that might have arisen in a review of the documentation.

Also, a thorough review of firefighting procedures is conducted. This review is conducted to determine the probability of manual suppression in a given length of time for all critical plant areas. The results of this analysis are given in Appendix A.

B. Initial Quantification (Screening)

It is necessary to select important fire locations within the power plant under investigation that have the greatest potential for producing risk-dominant accident sequences. The objectives of the location analysis were to define a comprehensive set of fire areas covering the whole plant, determine the location of all relevant equipment and cables, and perform a systematic location analysis using models of the same level of detail as the internal events analysis. The result was expected to be the identification of all important fire areas, combinations of areas, and associated random failures down to a similar level of truncation as was used in the internal event analysis.

The screening analysis is comprised of:

1. Identification of the finest level of resolution of the plant into areas for which component and cable locations will be identified. These areas will be called locations and are determined in conjunction with the other external event analyses (Section 3.2).

Table 3.1

Dominant LaSalle Fire Area Core Damage Frequency Contributors

Fire Area	Core Damage Frequency (yr.) Mean*	5th Percentile	Median	95th Percentile
Control Room (G)	1.39E-5	6.18E-14	1.25E-12	3.67E-6
Turbine Building Corridor (E)				
Scenario 1 (E-S2)	1.14E-7	1.55E-9	3.08E-8	5.69E-7
Scenario 2 (E-S3)	5.06E-7	6.94E-9	1.09E-7	2.09E-6
Cable Spreading Room (N)	1.63E-7	0	0	9.25E-8
Electrical Equipment Room (P)	5.73E-7	0	0	2.28E-6
Auxiliary Equipment Room				
Northwest Corner (T)	2.27E-6	4.48E-8	6.77E-7	7.78E-6
Balance of Room (S)				
Scenario 1 (S-AA)	5.94E-9	0	0	2.72E-8
Scenario 2 (S-W)	3.52E-7	0	0	1.57E-6
Division 2 Essential Switchgear Room (W)				
Scenario 1 (W1)	1.80E-6	0	0	1.87E-6
Scenario 2 (W2)	6.71E-6	0	0	1.35E-5
Division 1 Essential Switchgear Room (Y)				
Scenario 1 (Y1)	1.76E-6	0	0	1.91E-6
Scenario 2 (Y2)	3.39E-6	0	0	7.90E-6
Rad/Chem Offices (Z)	3.58E-8	0	0	2.03E-7
BOP Cable Area North (AA)	7.31E-9	0	0	3.59E-8
Cable Shaft Area (AC)	5.42E-7	0	0	2.79E-6
Total	3.21E-5	1.32E-7	1.99E-6	5.94E-5

* For highly skewed distributions with long tails, the mean value is dominated by the upper portion of the distribution and the mean value can be greater than the 95th percentile.

Table 3.2

Dominant Accident Sequence Core Damage Frequency Contributors

Sequence	Fire Area	Mean Core Damage Frequency (yr.)
T1	Control Room (G)	1.39E-5
T2	Turbine Building Corridor (E-S2)	1.14E-7
T3A	Turbine Building Corridor (E-S3)	5.06E-7
	Cable Spreading Room (N)	1.63E-7
	Electrical Equipment Room (P)	5.73E-7
	Auxiliary Equipment Room	
	Northwest Corner (T)	2.27E-6
	Balance of Room (S)	
	Scenario 1 (S-AA)	5.94E-9
	Scenario 2 (S-W)	3.52E-7
	Division 2 Essential Switchgear Room (W)	
	Scenario 1 (W1)	1.80E-6
	Scenario 2 (W2)	6.71E-6
	Division 1 Essential Switchgear Room (Y)	
	Scenario 1 (Y1)	1.76E-6
	Scenario 2 (Y2)	3.39E-6
	Rad/Chem Offices (Z)	3.58E-8
	BOP Cable Area North (AA)	7.31E-9
	Cable Shaft Area (AC)	5.42E-7
	Total	3.21E-5

2. Identification of the fire zones used in the LaSalle FSAR Fire Hazard Analysis[1] in terms of these locations. (These do not necessarily have fire rated barriers at all points) (Section 3.2).

3. Identification of the fire areas to be used in this analysis in terms of the fire zones or locations determined previously in Step 2. (These areas have fire rated barriers at all points, although not necessarily 3-hr. rated) (Section 3.2).

4. Initial quantification of fire initiating event frequencies in terms of general plant areas (Section 3.3).

5. Determination of accident sequences to be evaluated (Section 3.4).

6. Mapping of all cables to associated components on the fault trees (Section 3.5.1).

7. Mapping of all cable routing points and components to locations (Section 3.5.1).

8. Solving the system fault trees in terms of fire areas and random failures (Section 3.5.2).

9. Solving the accident sequences in terms of fire areas and random failures (Section 3.5.3).

10. Initial screening of the accident sequence cut sets based on the number of fire areas and barriers needed to fail and the probability of the random failures. Take into account the possibility of operator recovery of the random failures (Section 3.5.4).

11. Final screening of the accident sequence cut sets based on absolute frequency using the information from Steps 4 and 10 above (Section 3.5.4).

The screening methodology (Section 3.5) describes how reduction of the initial group of locations from Section 3.2 to the eleven remaining with contributions to core damage frequency of greater than 1E-09 per year was accomplished.

C. Final Quantification

After the initial quantification analysis eliminated all but the probabilistically significant fire areas, final quantification of dominant cut sets was completed as follows:

1. Determine general fire scenarios for the specific fire area. (This is in terms of cut sets which include components within the area and associated randoms) (Section 3.5.5).

2. Using a map of the area, plot the position of components and cables which are associated with the cut sets in the area and determine nodal points for definition of specific fire scenarios in the area (Section 3.5).

3. Determine temperature response for each fire scenario in the fire area (Section 3.6).

4. Compute component fire fragilities. The latest version of the fire growth code COMPBRN[2,3,4] with some modifications was used to calculate fire propagation and equipment damage. A description of these results for Steps 1 and 2 is given in Section 3.6. These fire calculations were only performed for the fire areas that survived the screening analysis.

5. Assess the probability of barrier failure for all remaining combinations of fire areas. A barrier failure analysis was conducted for those combinations of two adjacent fire areas which, with or without additional random failures, remained after the screening analysis. The methodology to assign barrier failure probability to the fire area combinations is described in Section 3.7.

6. Perform a fire recovery analysis. Credit is given for the extinguishment of the fire before predicted time of damage and also for automatic suppression system suppression of the fire (Section 3.8).

7. Perform the final quantification and an uncertainty analysis of each remaining fire scenario to estimate error bounds on the computed fire-induced core damage frequencies. The TEMAC code[5] was utilized in the uncertainty analysis as described in Section 3.9.

In Section 3.10, a detailed description of all fire scenarios with contributions to core damage frequency of greater than 1E-09 per year and their associated fire areas is given. Distributions and description of all factors used in the final quantification of all fire areas are delineated.

3.2 Fire Areas Analyzed

3.2.1 Introduction

In this section, the division of the plant into locations, fire zones, and fire areas is described. This represents Steps 1, 2, and 3 of the initial quantification. Figure 3.1 shows the final set of locations determined in conjunction with the seismic and flood analyses that was used for describing all component and cable locations. Figure 3.2 shows the final set of fire areas used in this analysis. These figures are (text continued on page 3-26)

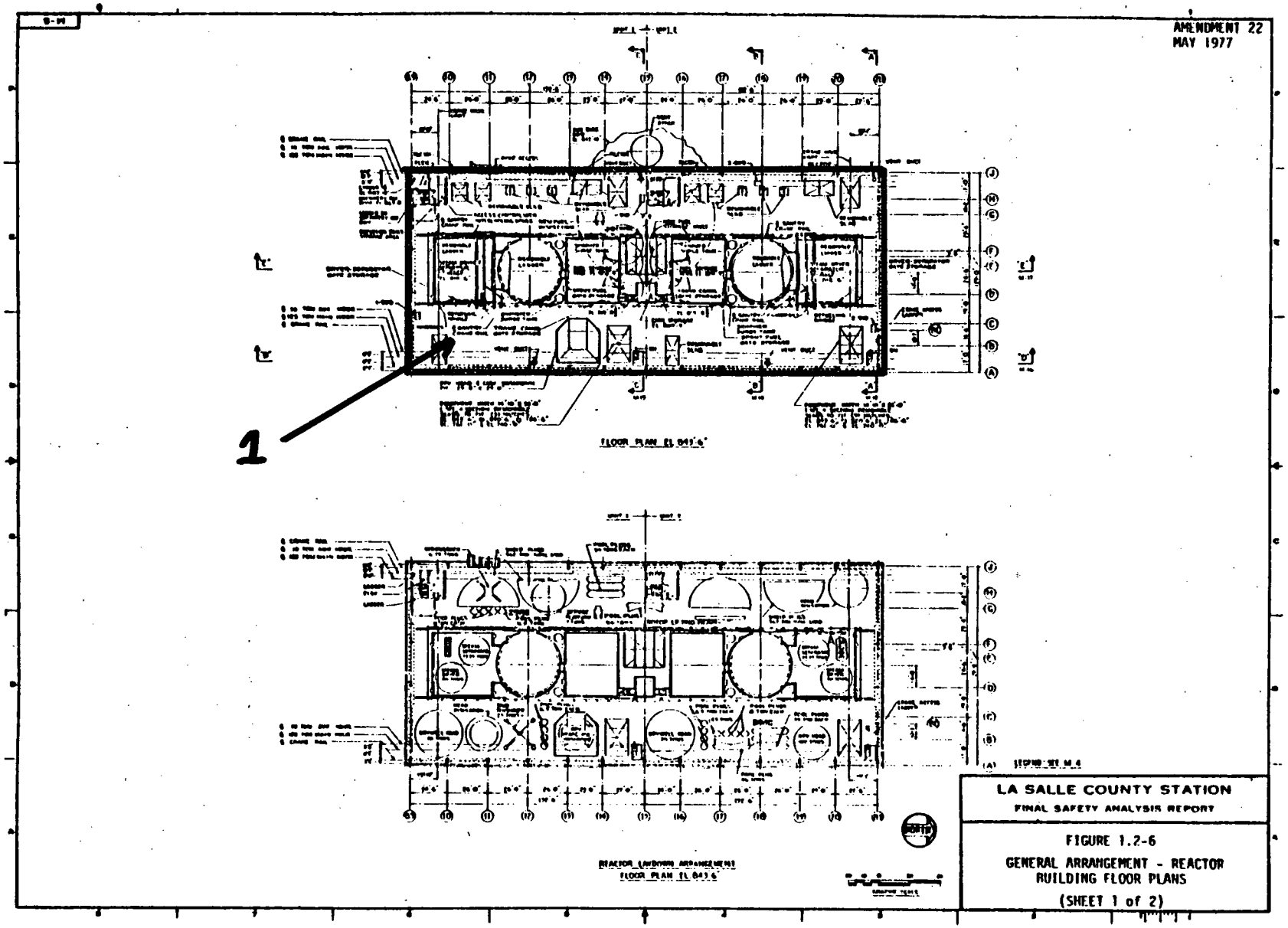

Figure 3.1 Final LaSalle Fire Locations

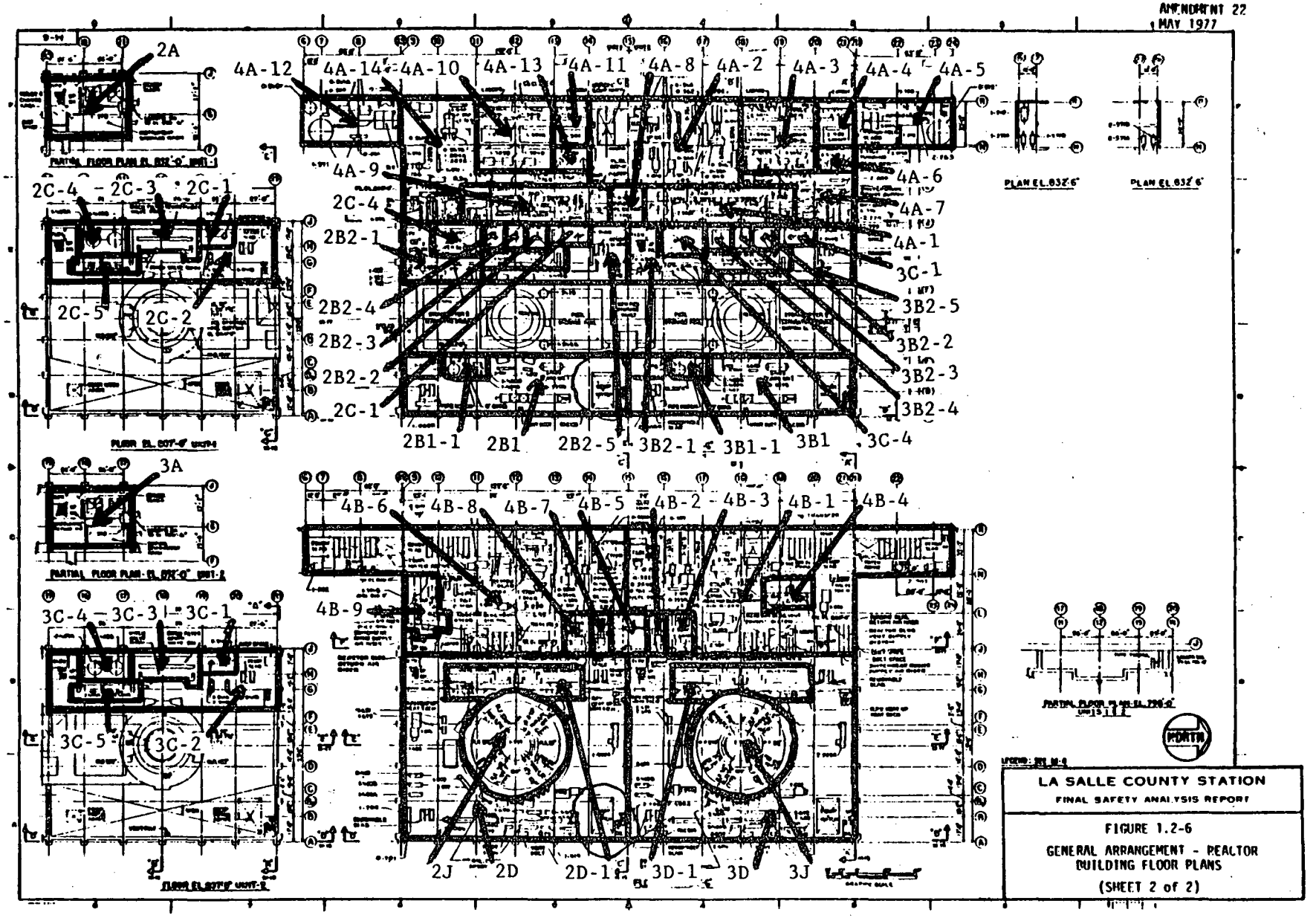

Figure 3.1 Final LaSalle Fire Locations (continued)

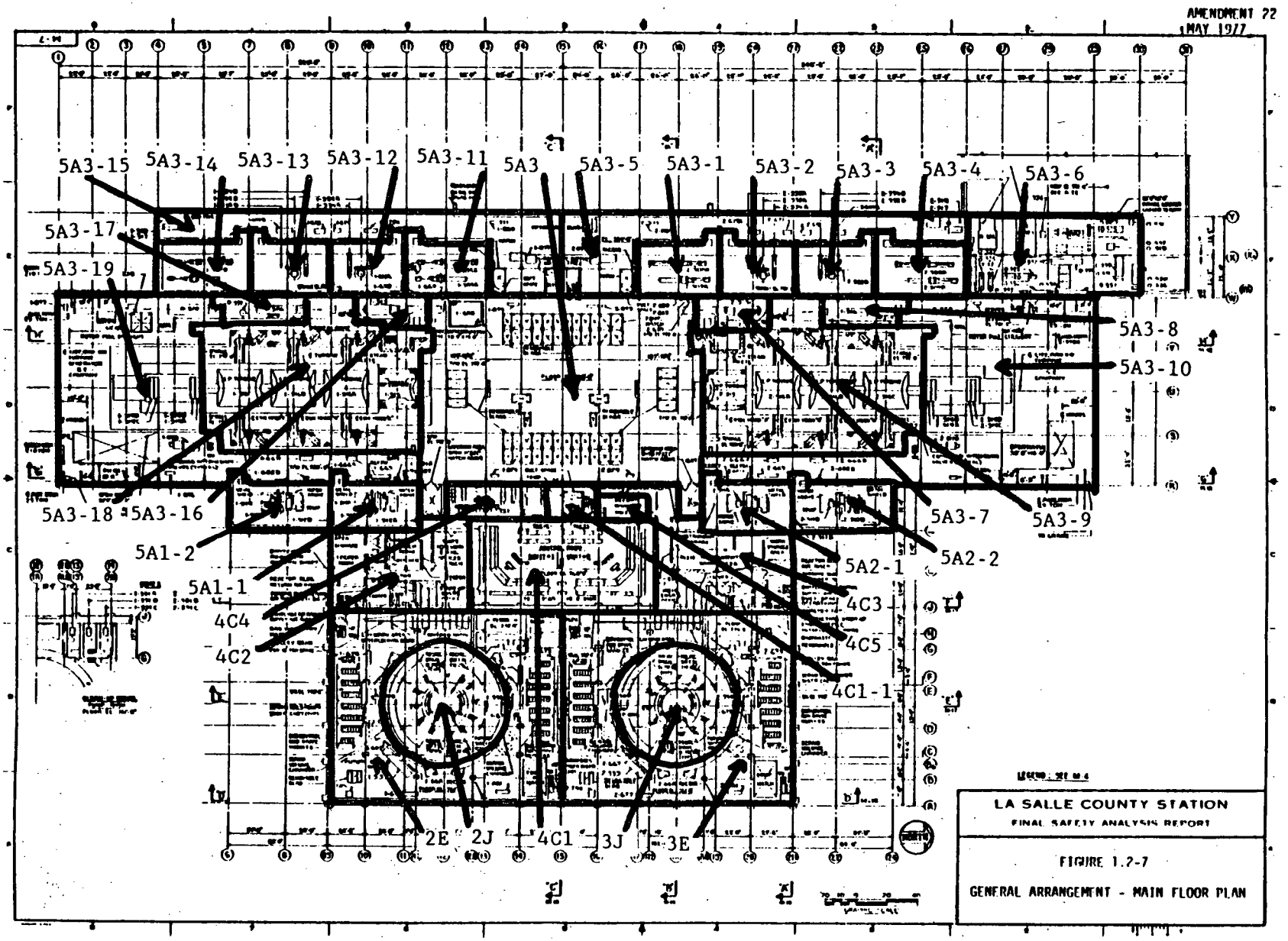

Figure 3.1 Final LaSalle Fire Locations (continued)

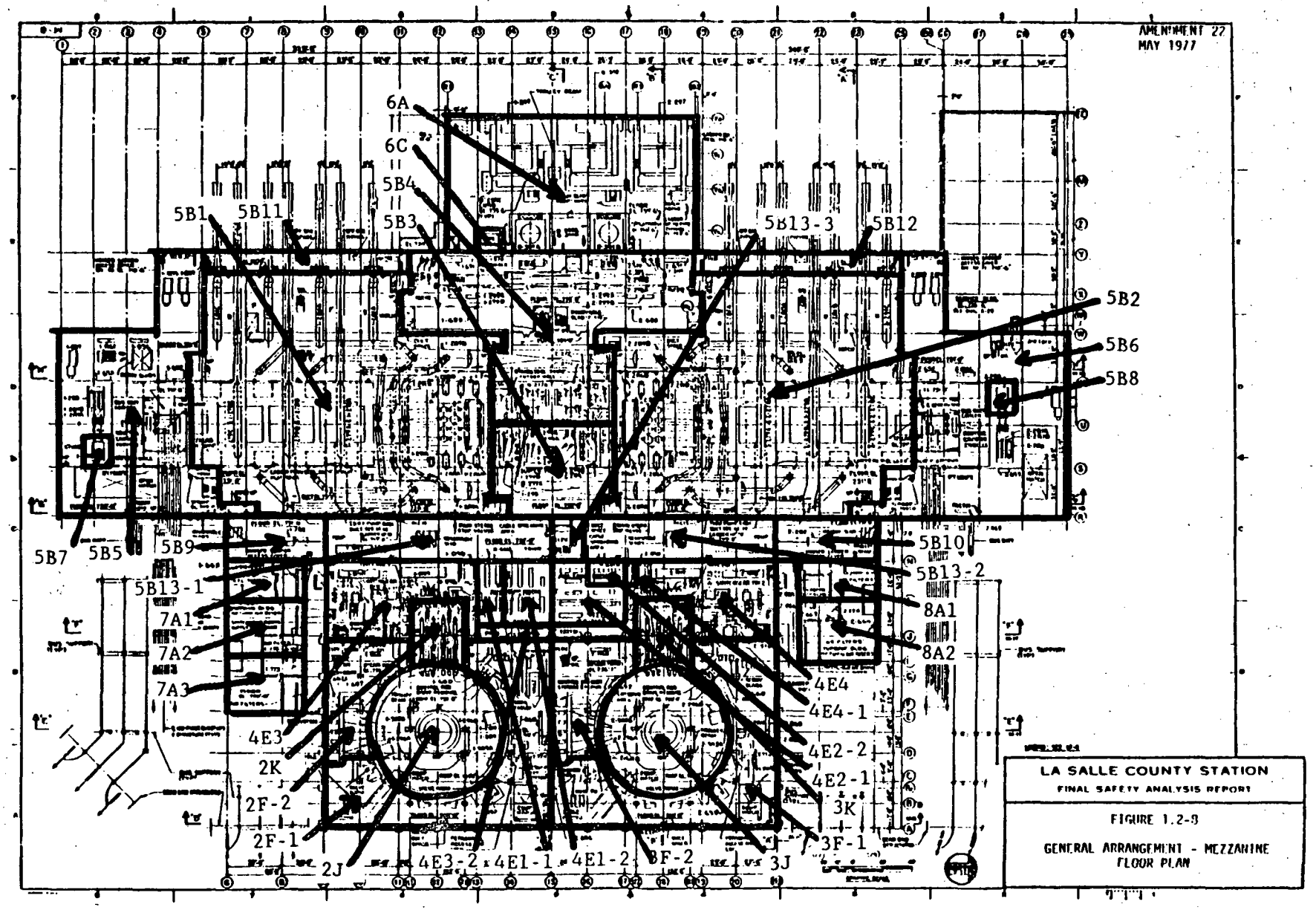

Figure 3.1 Final LaSalle Fire Locations (continued)

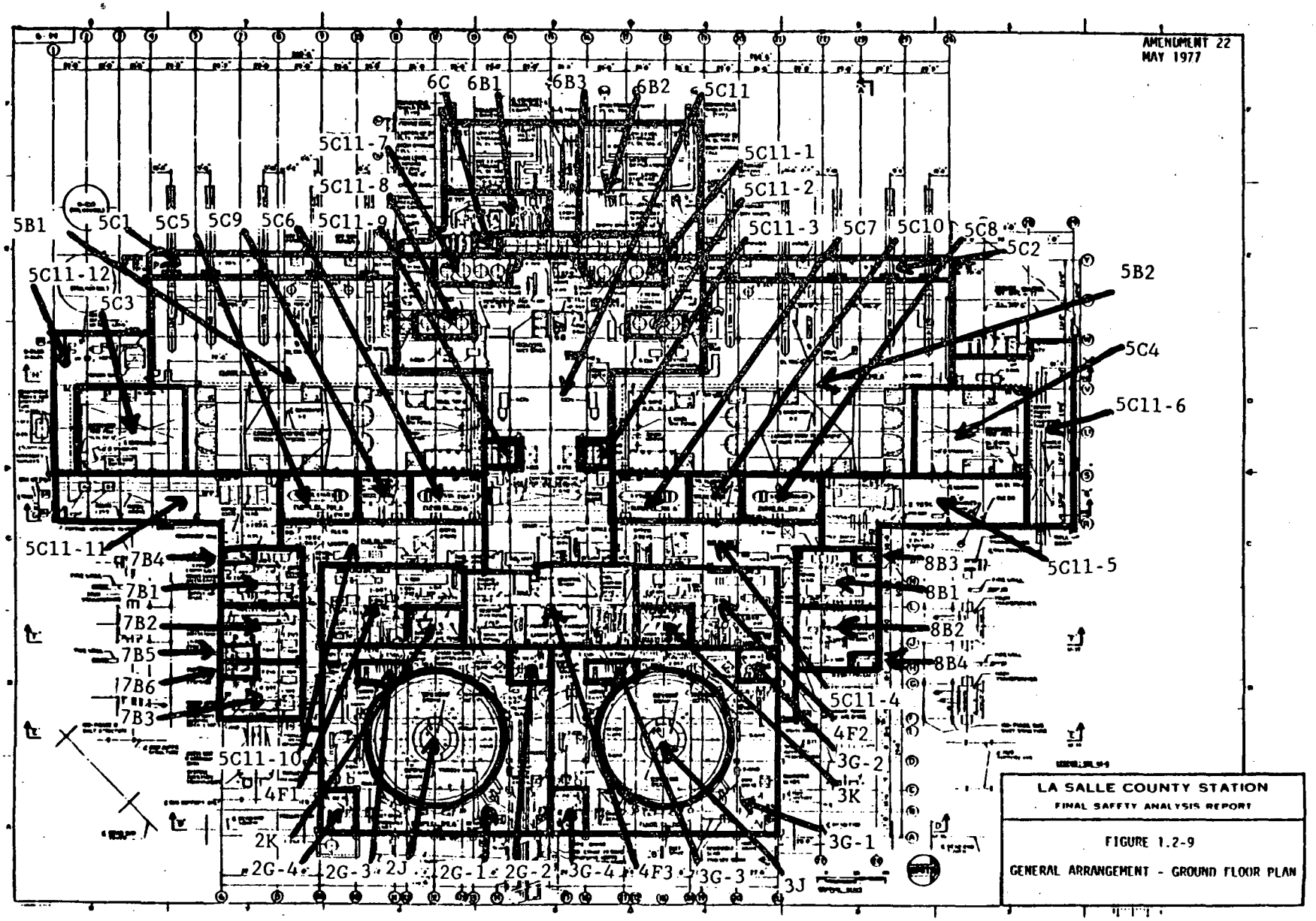

Figure 3.1 Final LaSalle Fire Locations (continued)

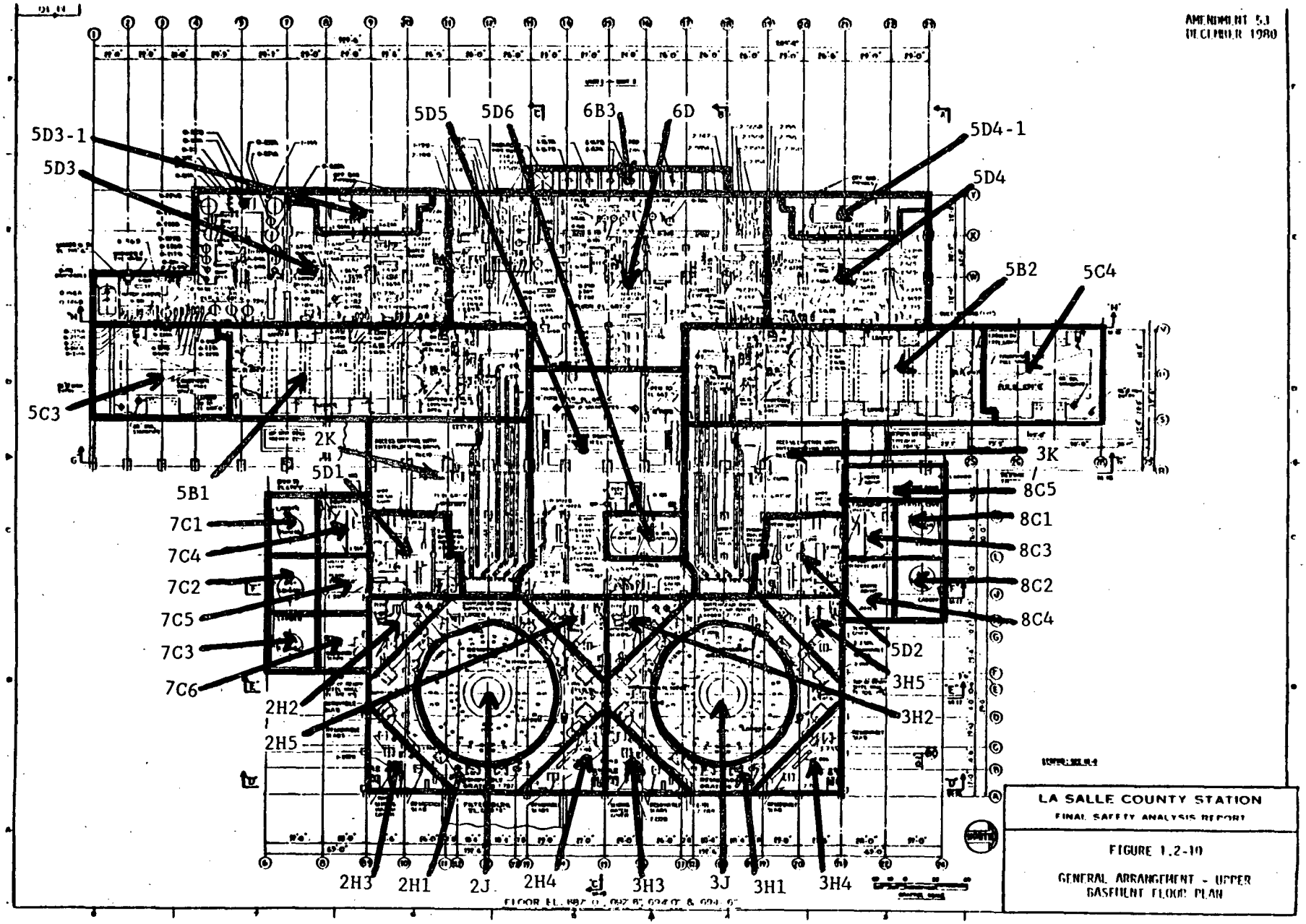

Figure 3.1 Final LaSalle Fire Locations (continued)

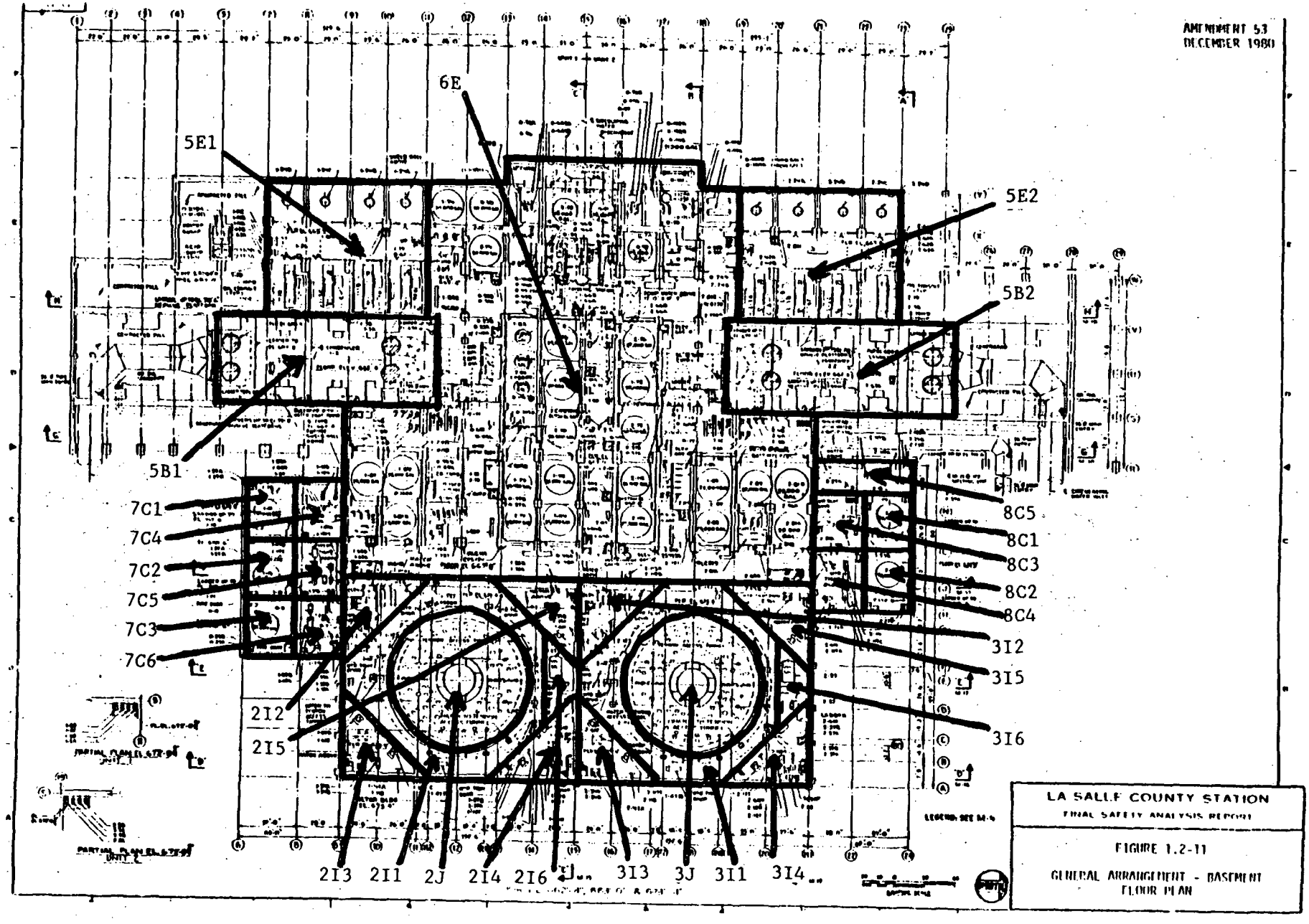

Figure 3.1 Final LaSalle Fire Locations (continued)

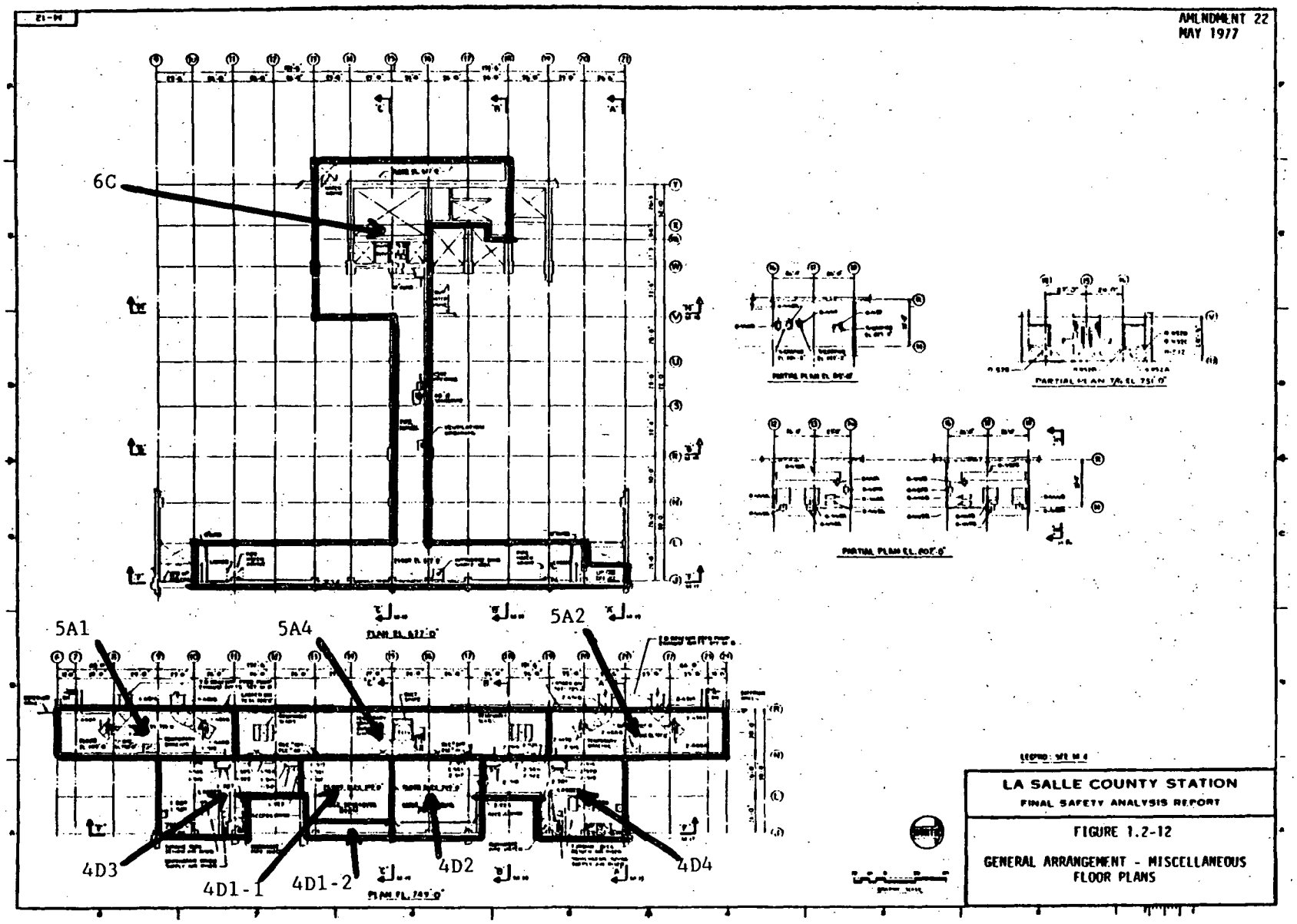

Figure 3.1 Final LaSalle Fire Locations (continued)

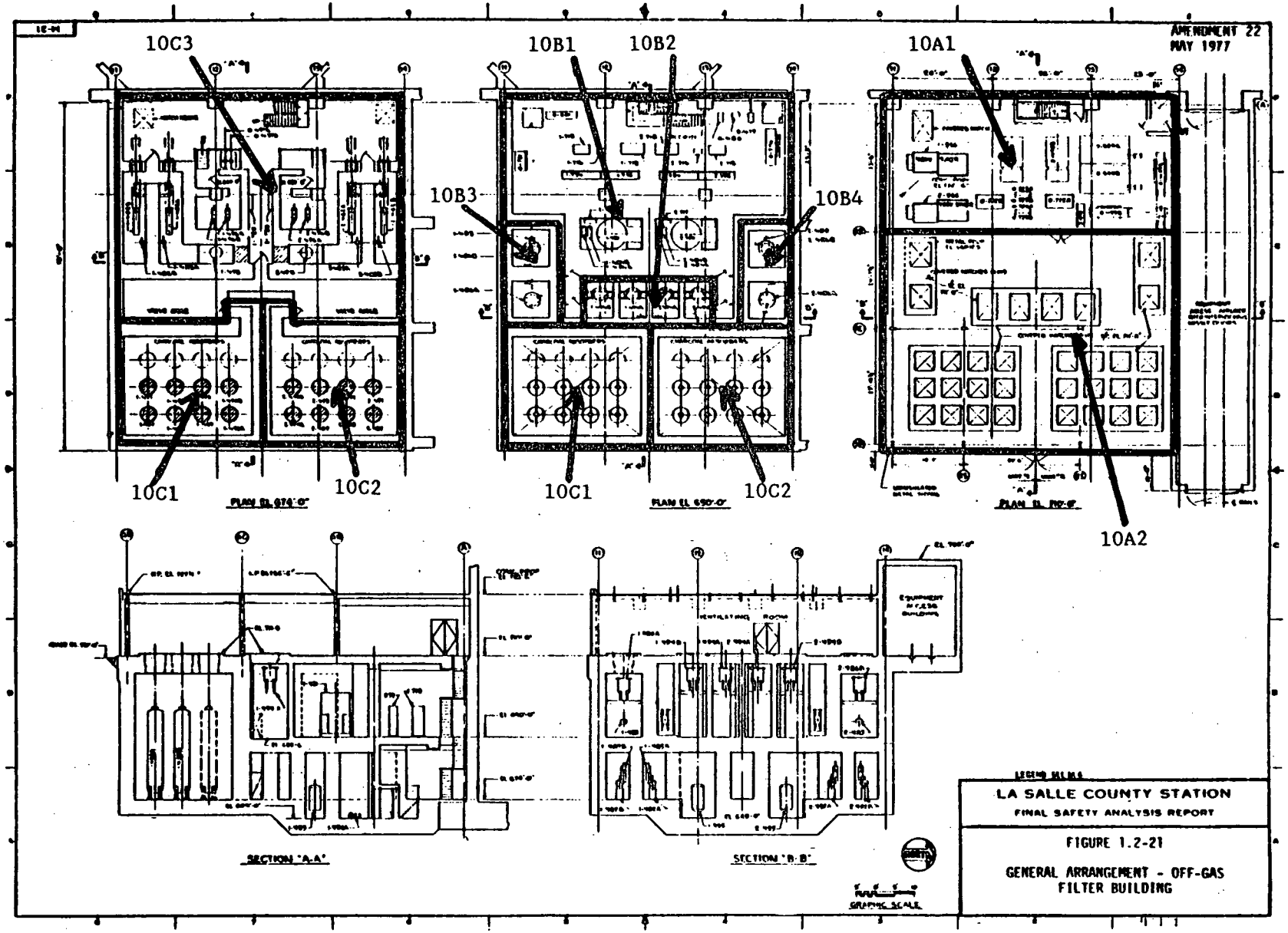

Figure 3.1 Final LaSalle Fire Locations (continued)

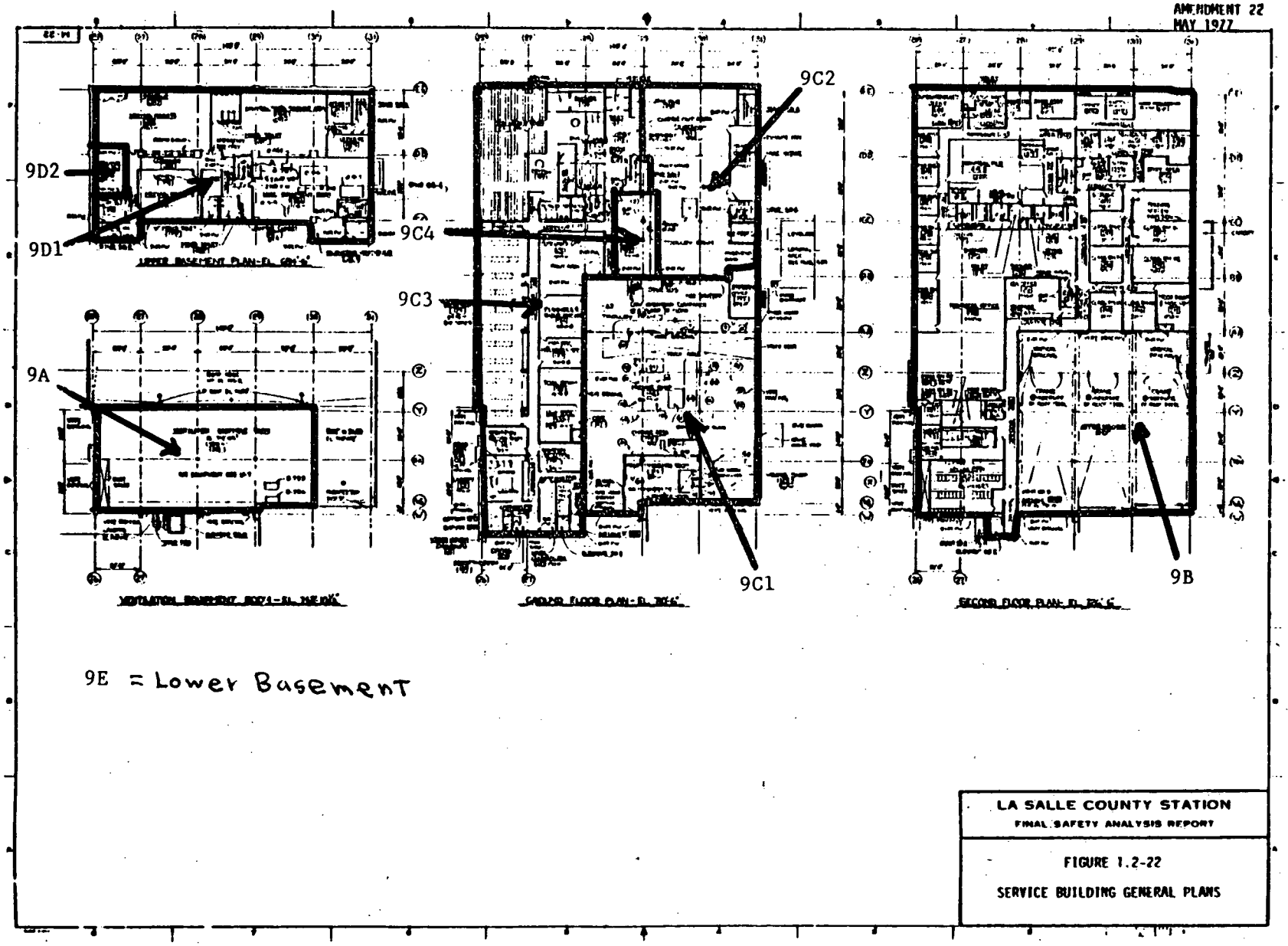

Figure 3.1 Final LaSalle Fire Locations (continued)

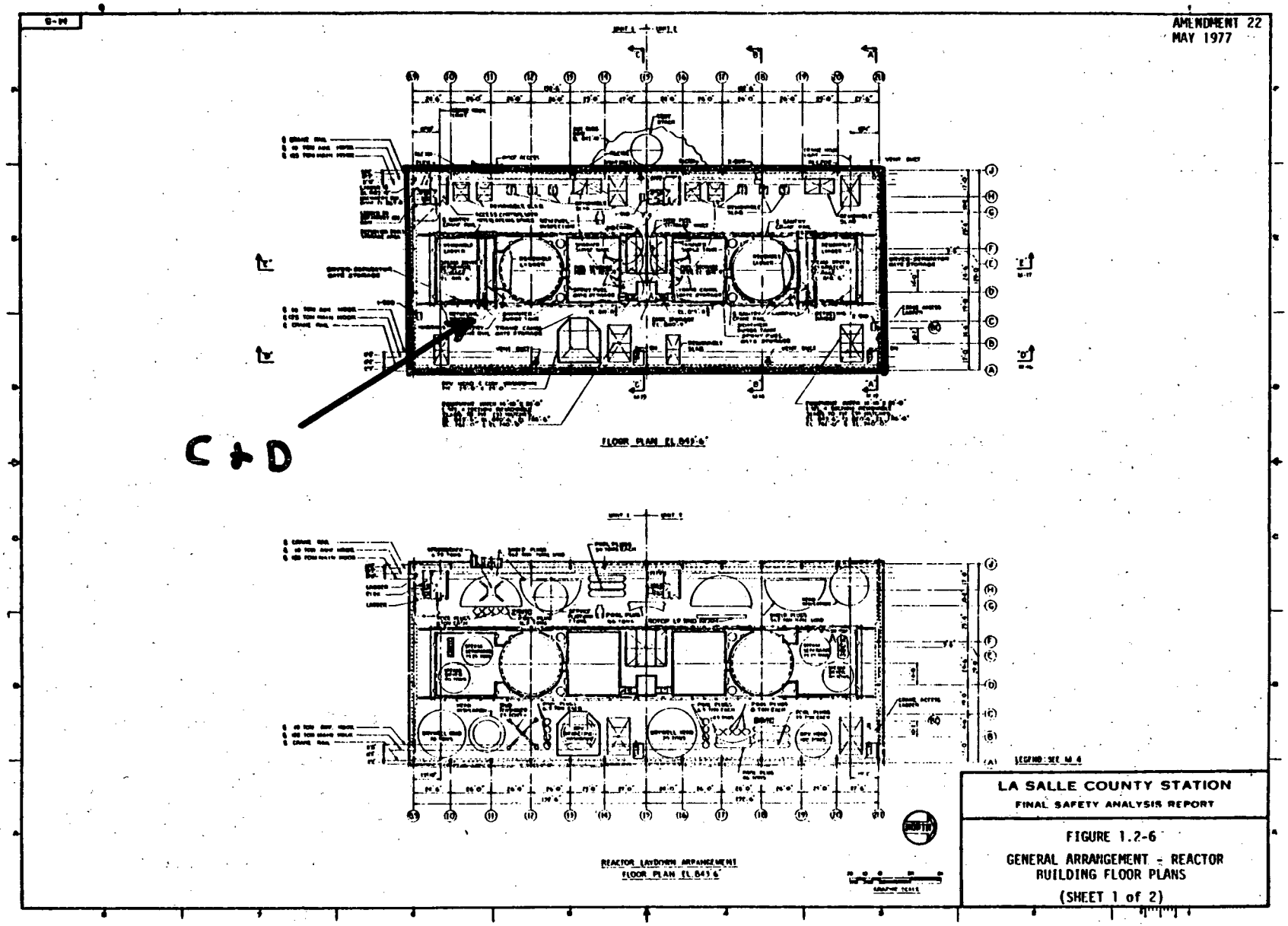

Figure 3.2 Final LaSalle Fire Areas

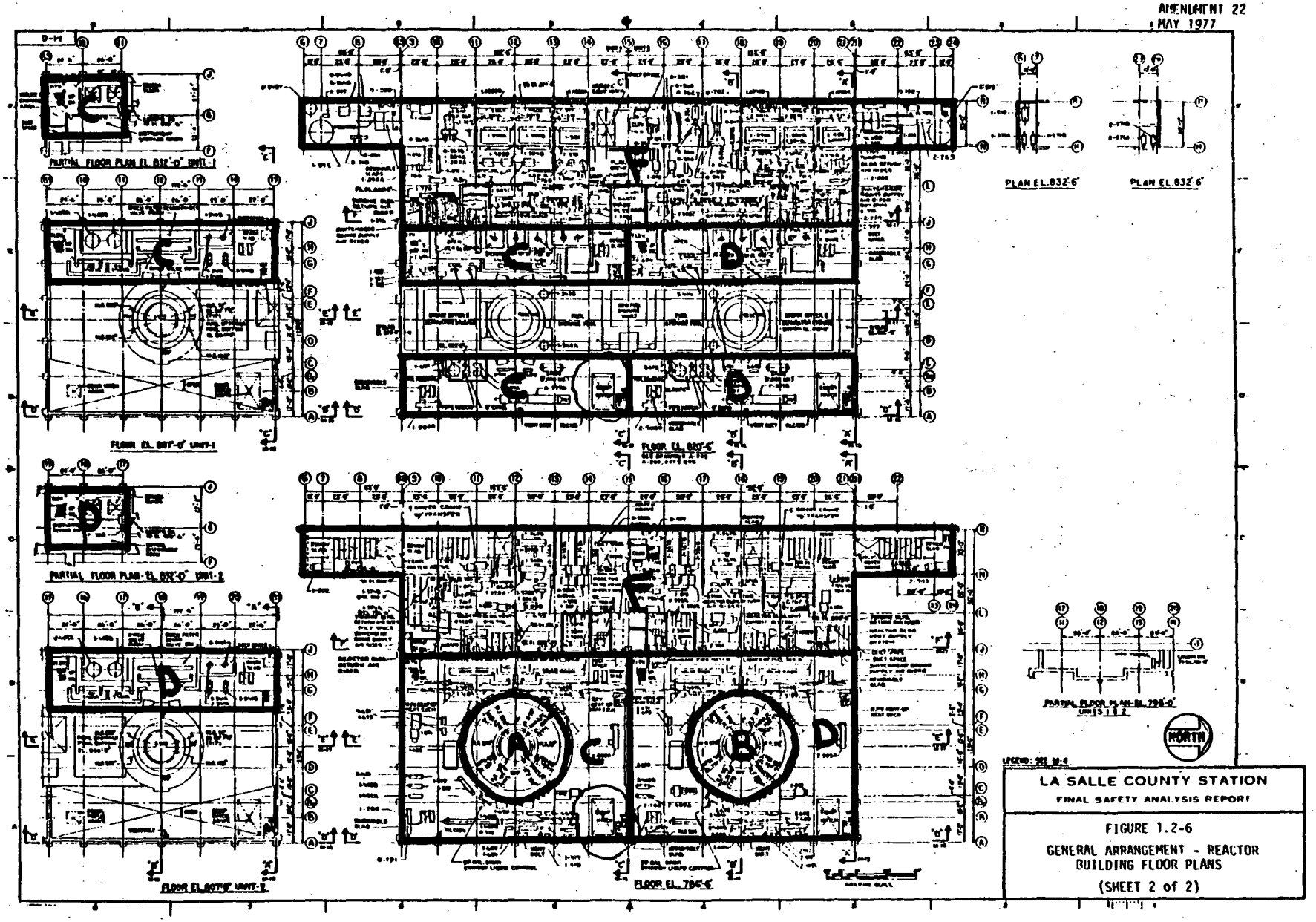

Figure 3.2 Final LaSalle Fire Areas (continued)

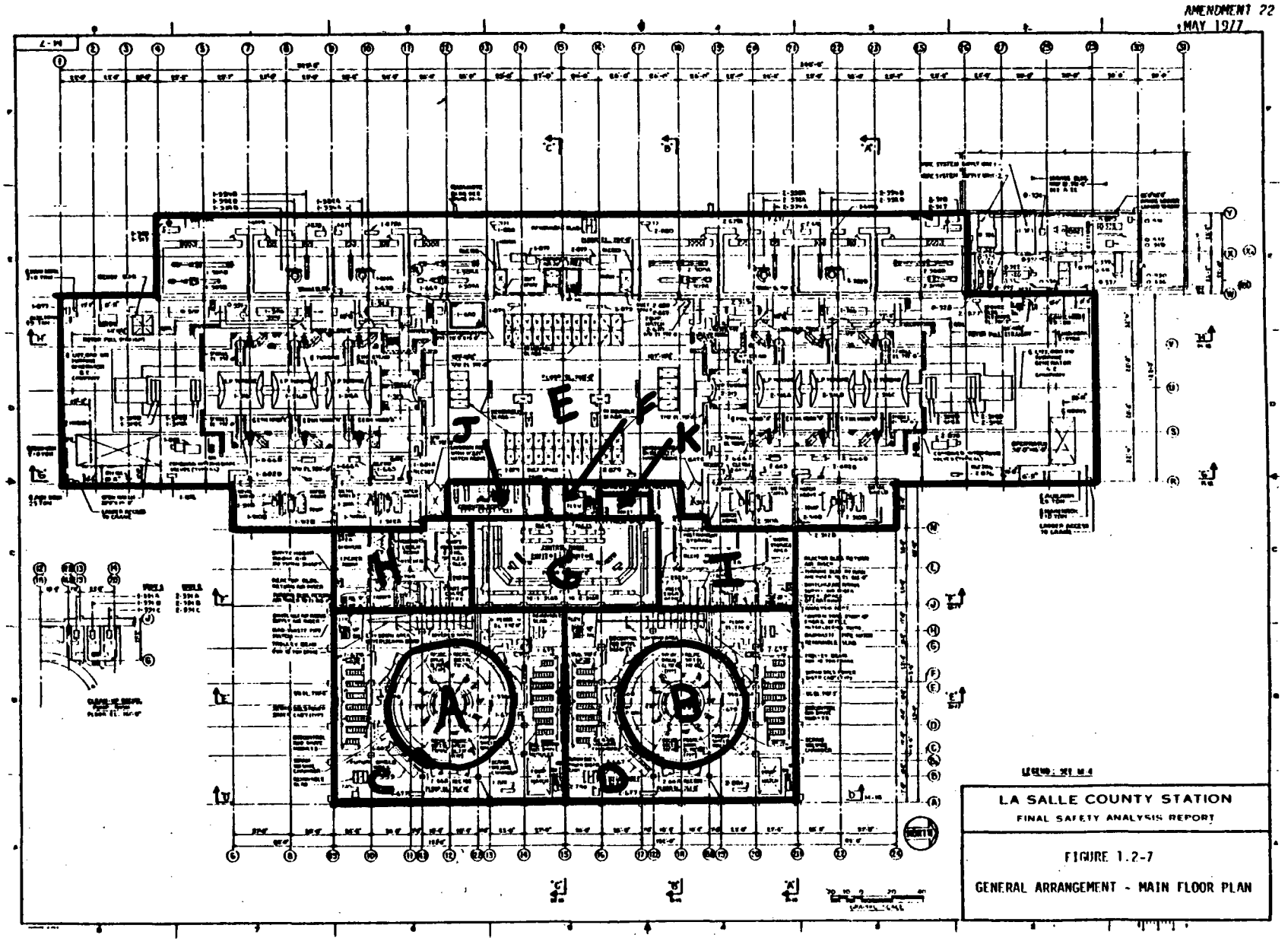

Figure 3.2 Final LaSalle Fire Areas (continued)

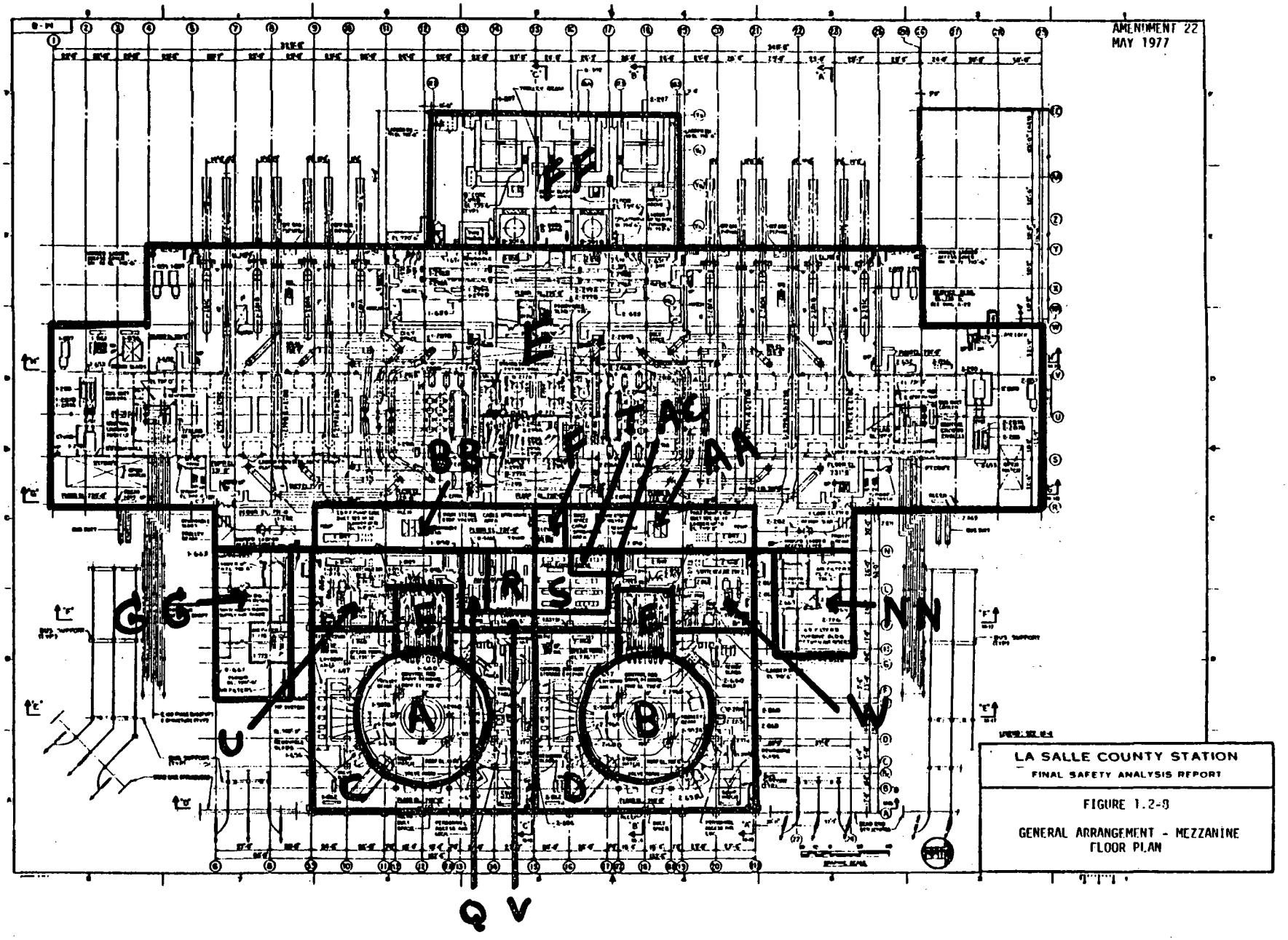

Figure 3.2 Final LaSalle Fire Areas (continued)

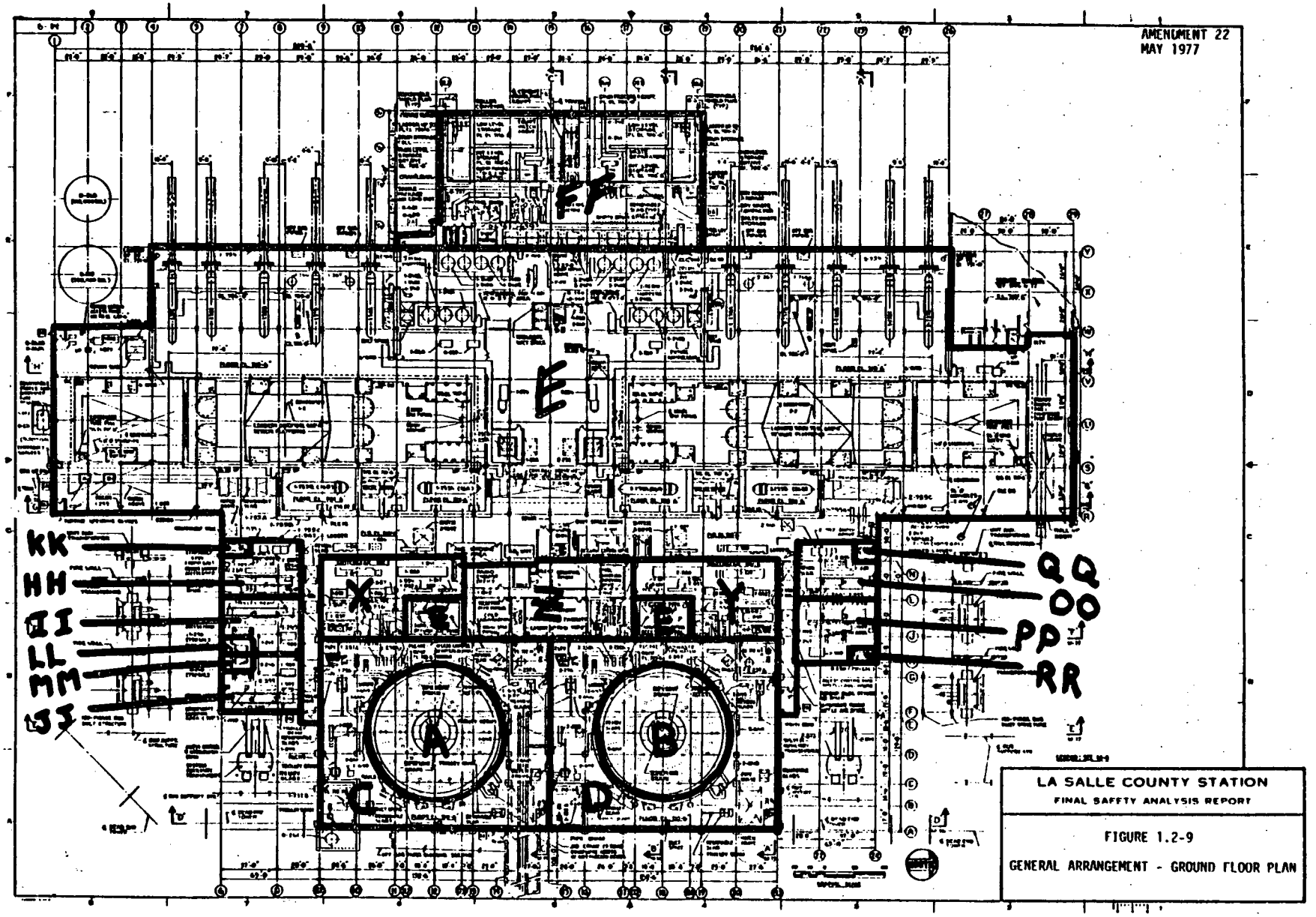

Figure 3.2 Final LaSalle Fire Areas (continued)

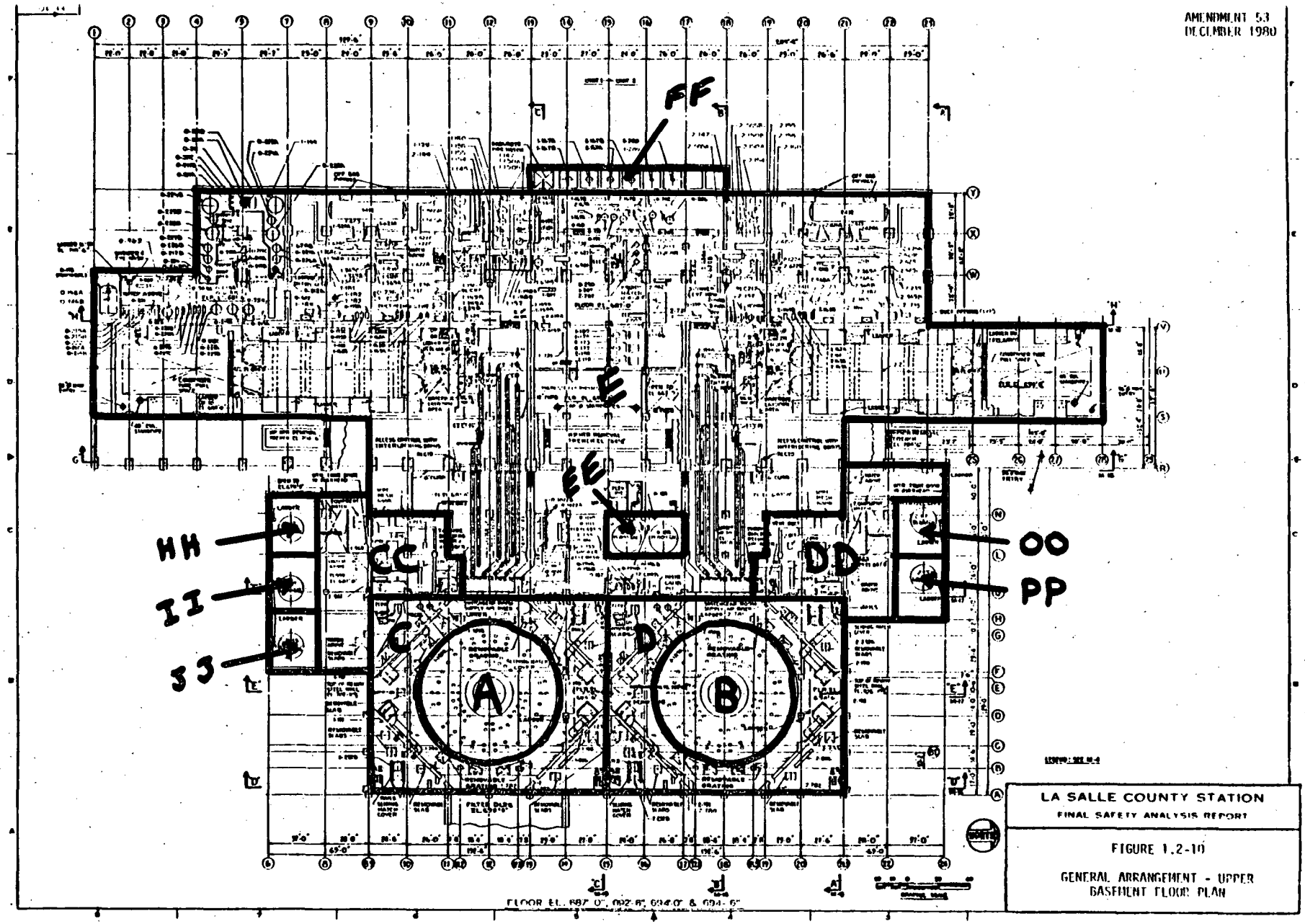

Figure 3.2 Final LaSalle Fire Areas (continued)

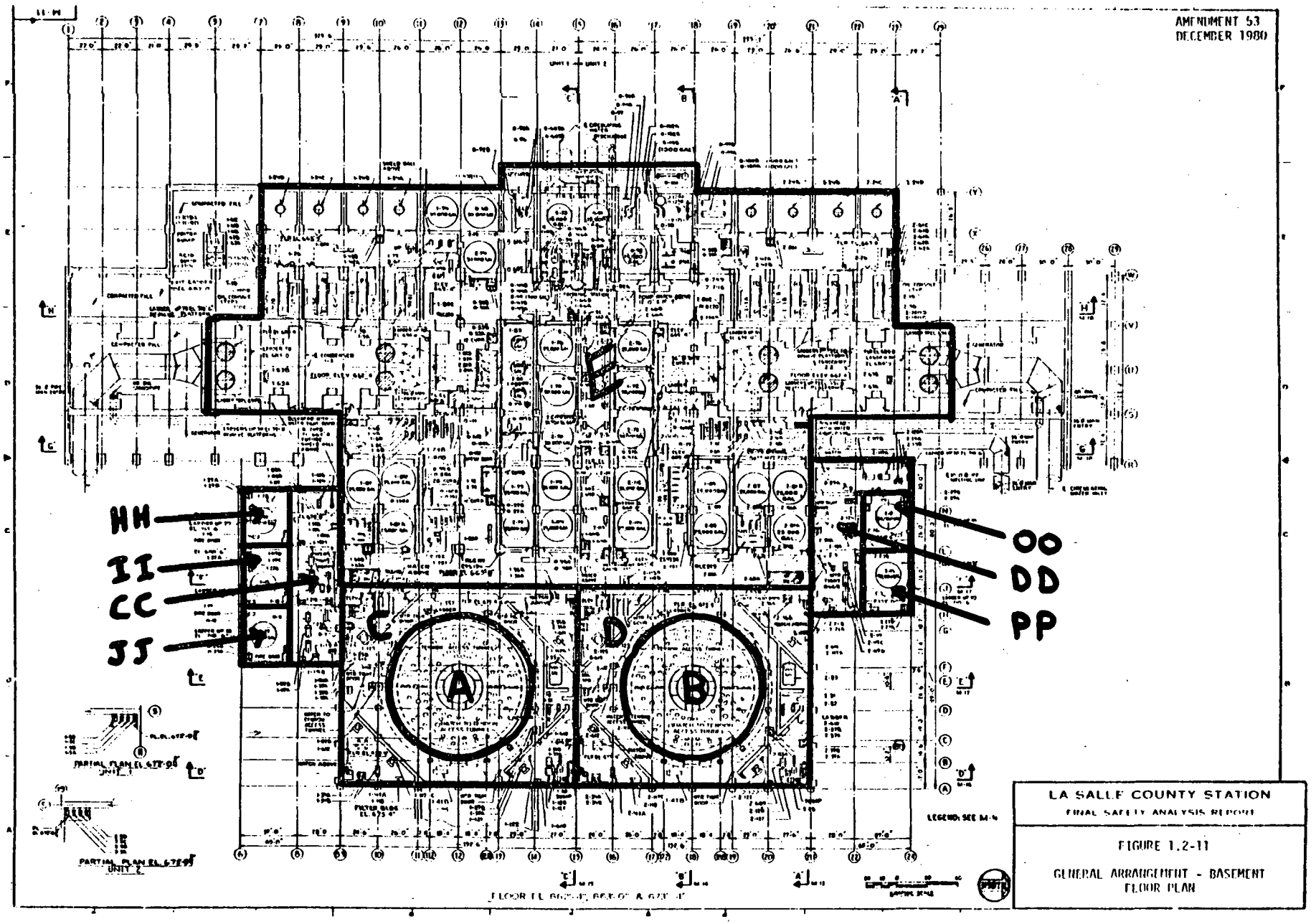

Figure 3.2 Final LaSalle Fire Areas (continued)

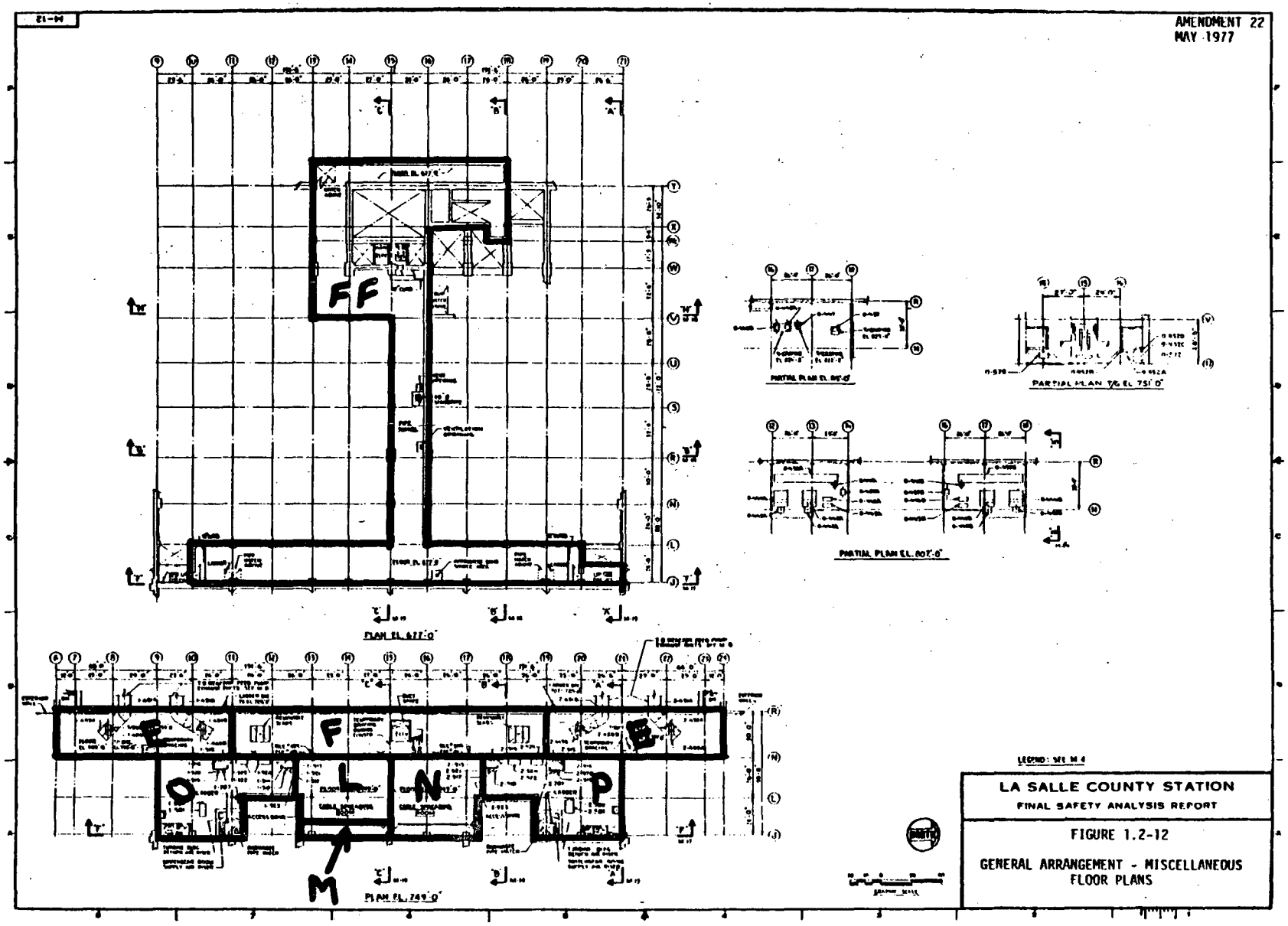

Figure 3.2 Final LaSalle Fire Areas (continued)

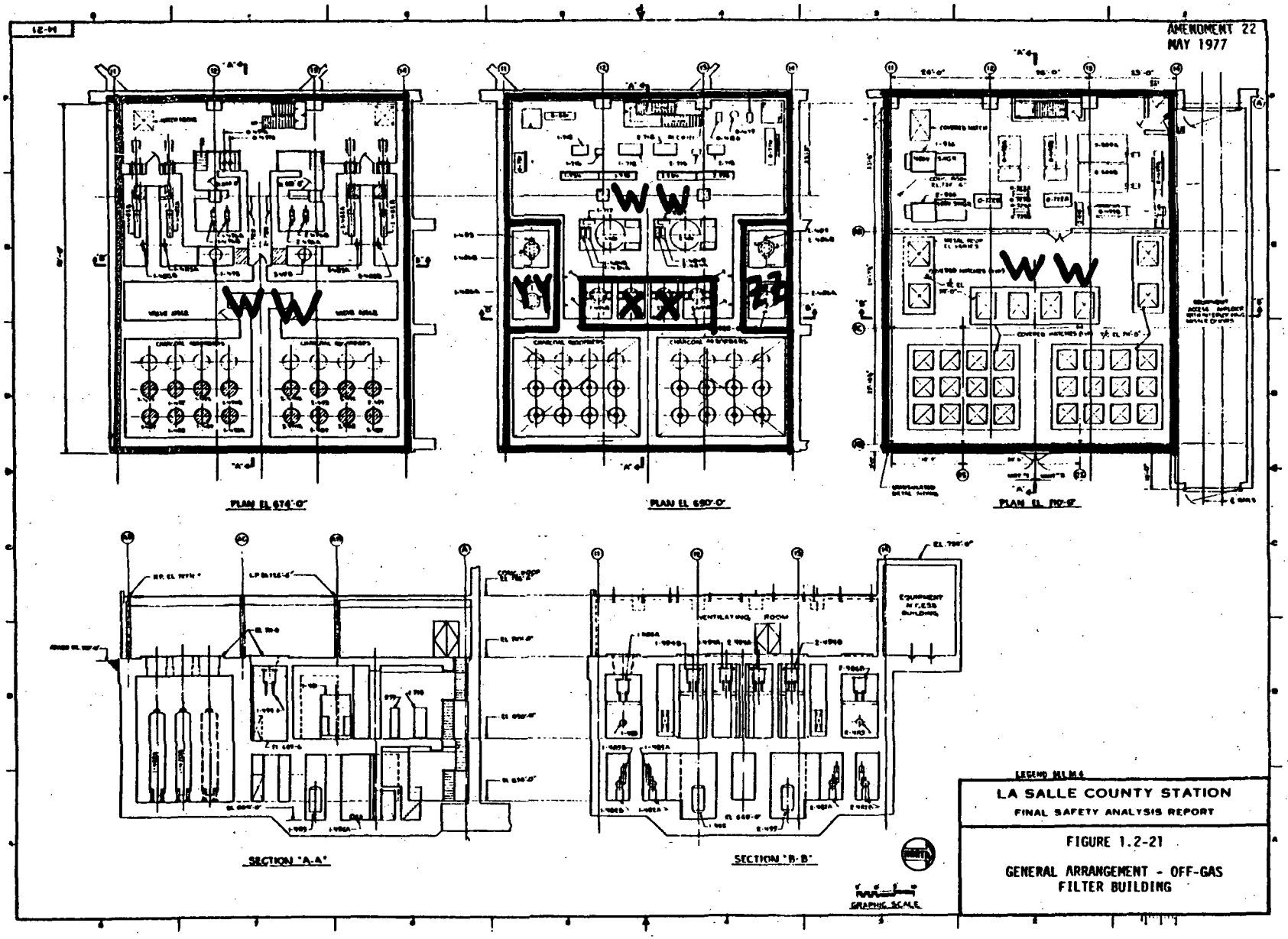

Figure 3.2 Final LaSalle Fire Areas (continued)

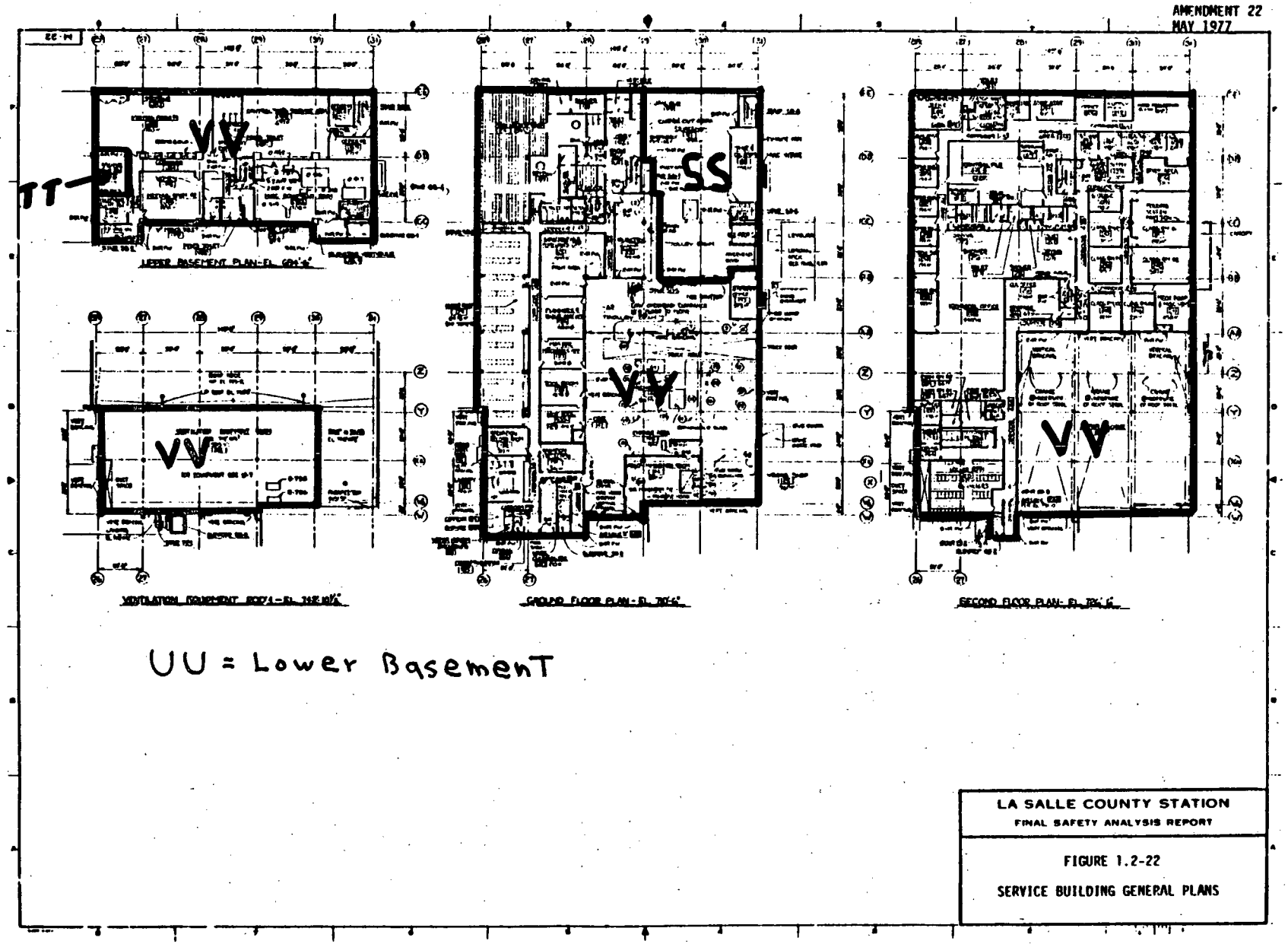

Figure 3.2 Final LaSalle Fire Areas (continued)

(text continued from page 3-5)
reduced from much larger drawings and are presented here only to show the general locations of the fire areas. Table 3.3 provides a comprehensive listing of the fire areas, a listing of the LaSalle fire zones and/or locations comprising each area, and a brief physical description of each. Information is provided in Appendix E for the identification and tracing of all components and cables used in this analysis for any fire area, zone, or location of interest. Table 3.4 presents a description of why selected fire zones do not equal fire areas.

This section describes the identification of those partitions and walls at the plant that qualify as barriers to the spread of fire. This involved review of the physical arrangements of the LaSalle plant via drawings, utility fire hazards analysis descriptions, and plant visits to determine which plant areas are surrounded by qualified fire barriers. The result of this analysis is an identification of those area perimeters at the plant which define fire areas.

3.2.2 Definitions

Two key definitions are essential in defining those areas that qualify as fire areas. These definitions are central to this discussion since without a clear understanding of them, one can become easily confused between the results reported in this section and the descriptions used in the LaSalle Fire Hazards Analysis[1] report for the LaSalle fire zones.

Fire Areas---For this task, fire areas are defined as those areas that meet the intent of NRC Generic Letter 83-33, dated October 19, 1983.[6] Generic Letter 83-33 defines a fire area as follows:

> "A fire area is defined as that portion of a building or plant that is separated from other areas by boundary fire barriers (walls, floors and ceilings with any openings or penetrations protected with seals or closures having a fire resistance rating equal to that required of the barrier). Open stairwells and hatchways in ceilings and floors are not fire area boundaries.
>
> For boundary fire barriers, using walls, floors, ceilings, dampers, doors, etc., existing prior to Appendix R, the rating required of a boundary fire barrier is based on the guidance in Appendix A to BTP ASB 9.5-1, i.e., the rating of the barrier or boundary must exceed with margin the fire loading in the area and need not necessarily be a 3-hr. rated boundary unless the fire loading warrants such a boundary. For modifications which involve the installation of new boundary fire barriers pursuant to Section III.G.2.a. The fire rating of such boundaries must be three hrs., or an exemption must be justified and requested."

(text continued on page 3-39)

Table 3.3

LaSalle County Station Nuclear Power Plant Fire Areas

Fire Area	LaSalle Fire Zones/Subzones (Locations) Included in this Fire Area
A	2J (Unit 1 Primary Containment)
B	3J (Unit 2 Primary Containment)
C	2A, 2B1, 2B1-1, 2B2-1, 2B2-2, 2B2-3, 2B2-4, 2B2-5, 2C-1, 2C-2, 2C-3, 2C-4, 2C-5, 2D, 2D-1, 2E, 2F-1, 2F-2, 2G-1, 2G-2, 2G-3, 2G-4, 2H1, 2H2, 2H3, 2H4, 2H5, 2I1, 2I2, 2I3, 2I4, 2I5, 2I6, 1 (Unit 1 Reactor Building)
D	3A, 3B1, 3B1-1, 3B2-1 3B2-2, 3B2-3, 3B2-4, 3B2-5, 3C-1, 3C-2, 3C-3, 3C-4, 3C-5, 3D, 3D-1, 3E, 3F-1, 3F-2, 3G-1, 3G-2, 3G-3, 3G-4, 3H1, 3H2, 3H3, 3H4, 3H5, 3I1, 3I2, 3I3, 3I4, 3I5, 3I6, 1 (Unit 2 Reactor Building)
E	2K, 3K, 5A1, 5A1-1, 5A1-2, 5A2, 5A2-1, 5A2-2, 5A3, 5A3-1, 5A3-2, 5A3-3, 5A3-4, 5A3-5, 5A3-6, 5A3-7 5A3-8, 5A3-9, 5A3-10, 5A3-11, 5A3-12, 5A3-13, 5A3-14, 5A3-15, 5A3-16, 5A3-17, 5A3-18, 5A3-19, 5B1, 5B2, 5B3, 5B4, 5B5, 5B6, 5B7, 5B8, 5B9, 5B10, 5B11, 5B12, 5C1, 5C2, 5C3, 5C4, 5C5, 5C6, 5C7, 5C8, 5C9, 5C10, 5C11, 5C11-1, 5C11-2, 5C11-3, 5C11-4, 5C11-5, 5C11-6, 5C11-7, 5C11-8, 5C11-9, 5C11-10, 5C11-11, 5C11-12, 5D3, 5D3-1, 5D4, 5D4-1, 5D5, 5E1, 5E2, 6D, 6E (Turbine Building)
F	4A-1, 4A-2, 4A-3, 4A-4, 4A-5, 4A-6, 4A-7, 4A-8, 4A-9, 4A-10, 4A-11, 4A-12, 4A-13, 4A-14, 4B-1, 4B-2, 4B-3, 4B-4, 4B-5, 4B-6, 4B-7, 4B-8, 4B-9, 5A4 (Ventilation Equipment Floor and Cable Area), 4C1-1 (Elevator Area Outside of Control Room), 5B13-3 (Balance of Plant Cable Area, Center)
G	4C1 (Control Room) (1)
H	4C2 (Auxiliary Building, Office Area)
I	4C3 (Auxiliary Building, Office Area)
J	4C4 (Computer Room) (2)
K	4C5 (Security Control Center)
L	4D1-1 (Unit 1 Cable Spreading Room)

Table 3.3 (Continued)

LaSalle County Station Nuclear Power Plant Fire Areas

Fire Area	LaSalle Fire Zones/Subzones (Locations) Included in this Fire Area
M	4D1-2 (Unit 1 Cable Spreading Room)
N	4D2 (Unit 2 Cable Spreading Room)
O	4D3 (Electrical Equipment Room)
P	4D4 (Electrical Equipment Room)
Q	4E1-1 (Unit 1 Auxiliary Equipment Room)
R	4E1-2 (Unit 1 Auxiliary Equipment Room)
S	4E2-1 (Unit 2 Auxiliary Equipment Room)
T	4E2-2 (Unit 2 Auxiliary Equipment Room)
U	4E3 (Unit 1 Division 2 Essential Switchgear Room)
V	4E3-2 (Unit 1 Division 2 Essential Switchgear Room) (3)
W	4E4 (Unit 2 Division 2 Essential Switchgear Room)
X	4F1 (Unit 1 Division 1 Essential Switchgear Room)
Y	4F2 (Unit 2 Division 1 Essential Switchgear Room)
Z	4F3 (Auxiliary Building, Rad Chemistry Offices)
AA	5B13-2 (Balance of Plant Cable Area, North)
BB	5B13-1 (Balance of Plant Cable Area, South)
CC	5D1, 7C4, 7C5, 7C6 (Unit 1 HPCS, RHR Service Water Pump Rooms)
DD	5D2, 8C3, 8C4, 8C5 (Unit 2 HPCS, RHR Service Water Pump Rooms)
EE	5D6 (Clean and Dirty Oil Tank Room)
FF	6A, 6B1, 6B2, 6B3, 6C (Radwaste Processing Facility)
GG	7A1, 7A2, 7A3 (Unit 1 Diesel Ventilation Equipment Room)

Table 3.3 (Continued)

LaSalle County Station Nuclear Power Plant Fire Areas

Fire Area	LaSalle Fire Zones/Subzones (Locations) Included in this Fire Area
HH	7B1, 7C1 (Unit 1 HPCS Diesel Generator and Fuel Tank Rooms)
II	7B2, 7C2 (Unit 1 Division 2 Standby Diesel Generator and Fuel Tank Rooms)
JJ	7B3, 7C3 (Unit 1 Division 1 Standby Diesel Generator and Fuel Tank Rooms)
KK	7B4 (Unit 1 HPCS Diesel Day Tank Room)
LL	7B5 (Unit 1 Division 2 Diesel Day Tank Room)
MM	7B6 (Unit 1 Division 1 Diesel Day Tank Room)
NN	8A1, 8A2 (Unit 2 Diesel Ventilation Equipment Room)
OO	8B1, 8C1 (Unit 2 HPCS Diesel Generator and Fuel Tank Room)
PP	8B2, 8C2 (Unit 2 Division 2 Standby Diesel Generator and Fuel Tank Room)
QQ	8B3 (Unit 2 HPCS Diesel Day Tank Room)
RR	8B4 (Unit 2 Division 2 Diesel Day Tank Room)
SS	9C2 (Storeroom)
TT	9D2 (QA Archive File Room)
UU	9E (Service Building Lower Basement)
VV	9A, 9B, 9C1, 9C3, 9C4, 9D1 (Service Building)
WW	10A1, 10A2, 10B1, 10C1, 10C2, 10C3 (Off-Gas Building)
XX	10B2 (Off-Gas After Filter Cubicle)
YY	10B3 (Unit 1 Off-Gas Prefilter Cubicle)

Table 3.3 (Concluded)

LaSalle County Station Nuclear Power Plant Fire Areas

Fire Area	LaSalle Fire Zones/Subzones (Locations) Included in this Fire Area
ZZ	10B4 (Unit 2 Off-Gas Prefilter Cubicle)
LSH	Lake Screen House
AC	4E4-1 (Unit 2 Division 2 Essential Switchgear Room, Southwest Corner)

(1) Assumes main, double doors replaced with 3-hr. rated fire door as per design change.

(2) Assumes north wall rebuilt as a 3-hr. rated wall. Wall currently under construction.

(3) Assumes that the one open penetration in the south wall is filled as per design change.

Table 3.4

Description(s) As to Why Selected Fire Zones at LaSalle Do Not Equal Fire Areas as Defined in This Report

Presented are the various openings, non-rated doors, or hatches, that kept a fire zone from meeting the definition of a fire area. This is done by identifying the barrier between two zones and then the reason(s) as to why the barrier does not have a fire rating.

Barrier Between	Reason for Barrier Failure
2A-1	Open Stairwell, Unrated Elevator
2A-2B2	Open Stairwell, Non-rated door
2A-2C	Open Stairwell, Unrated Elevator
2B1-1	1/4-in. Steel Plate Covered Opening Open Stairwell
2B1-2D	Open Equipment Hatch Unprotected Pipe Penetration 1/4-in. Steel Plate Covered Opening
2B2-2C	Open Stairwell 1/4-in. Steel Plate Covered Opening
2C-2D	Open Stairwell 1/4-in. Steel Plate Covered Opening Unprotected Pipe Penetrations
2D-2E	Open Stairwell Unprotected Pipe Penetrations 1/4-in. Steel Plate Covered Opening Open Hatch
2E-2D	Open Stairwell Open Hatch
2E-2F	Open Stairwell Open Hatch 1/4-in. Steel Plate Covered Opening Unprotected Pipe Penetrations
2F-2G	Open Steel Grating Open Stairwell Open Hatch 1/4-in. Steel Plate Covered Opening

Table 3.4 (Continued)

Description(s) As to Why Selected Fire Zones at LaSalle Do Not Equal Fire Areas as Defined in This Report

Barrier Between	Reason for Barrier Failure
2G-2H2	Open Stairwell
2G-2H3	Open Steel Grating Open Stairwell Non-rated Door
2G-2H4	Open Stairwell
2G-2H5	Open Stairwell Open Grating Non-rated Door
2G-2H1	1/4-in. Steel Plate Covered Opening
2H1-2I1	Open Steel Grating
2H1-2H2	Non-rated Door Non-fire Dampered Ventilation Grill
2H1-2H3	Non-rated Door Non-fire Dampered Ventilation Grill
2H1-2H4	Non-rated Door Non-fire Dampered Ventilation Grill
2H1-2H5	Non-rated Door Non-fire Dampered Ventilation Grill
2H2-2I2	1/4-in. Steel Plate Covered Opening
2H3-2I3	Open Stairwell
2H4-2I4	Open Stairwell 1/4-in. Steel Plate Covered Opening
2H5-2I5	Open Stairwell
2I1-2I2	Non-rated Watertight Door
2I1-2I3	Non-rated Watertight Door
2I1-2I4	Non-rated Watertight Door

Table 3.4 (Continued)

Description(s) As to Why Selected Fire Zones at LaSalle Do Not Equal Fire Areas as Defined in This Report

Barrier Between	Reason for Barrier Failure
2I1-2I5	Non-rated Watertight Door
Unit 2 Reactor Building similar to the above.	
2I3-2H3	Unprotected Pipe Penetrations Open Stairwell
2I6-2I4	Non-rated Door
2K-5B1	Unprotected Opening
Unit 2 Reactor Building similar to Unit 1 Reactor Building above corrected for opposite hand geometry.	
4A-4B	Open Stairwell Undampered Transfer Grill
4B-5A4	Open Stairwell
5A1-5A2	Unprotected Exhaust Opening Non-rated Blow-Out Panels
5A1-5A3	Unprotected Exhaust Opening Non-rated Blow-Out Panels
5A3-5B1	1/4-in. Steel Plate Covered Opening Open Stairwell
5A3-5B2	1/4-in. Steel Plate Covered Opening Open Stairwell
5A3-5B4	1/4-in. Steel Plate Covered Opening Open Stairwell Unprotected Opening
5A3-5B5	1/4-in. Steel Plate Covered Opening Open Stairwell Open Hatch
5A3-5B6	1/4-in. Steel Plate Covered Opening Open Stairwell Open Hatch

Table 3.4 (Continued)

Description(s) As to Why Selected Fire Zones at LaSalle Do Not Equal Fire Areas as Defined in This Report

Barrier Between	Reason for Barrier Failure
5B1-2K	Unprotected Opening
5B1-5B4	Unprotected Steel Wall Frame
5B1-5B5	Non-rated Wall Seal Non-rated Door
5B1-5B9	Non-rated Blow-Out Panel
5B1-5B11	Non-rated Wall Seal
5B1-5C1	Non-rated Wall Seal
5B1-6E	Non-rated Watertight Door
5B2-3K	Unprotected Opening
5B2-5B4	Unprotected Steel Wall Frame
5B2-5B6	Non-rated Wall Seal Non-rated Door
5B2-5B10	Non-rated Blow-Out Panel
5B2-5B12	Non-rated Wall Seal
5B2-5C2	Non-rated Wall Seal
5B2-6E	Non-rated Watertight Door
5B3-5C11	Unprotected Steel Floor Frame
5B4-5C11	Unprotected Steel Floor Frame
5B4-5B11	Unprotected Steel Wall Frame
5B4-5B12	Unprotected Steel Wall Frame
5B5-5B11	Non-rated Door Non-rated Wall Seal
5B5-5C3	Open Grating

Table 3.4 (Continued)

Description(s) As to Why Selected Fire Zones at LaSalle Do Not Equal Fire Areas as Defined in This Report

Barrier Between	Reason for Barrier Failure
5B5-5B7	Unprotected Wall Opening
5B6-5B12	Non-rated Door Non-rated Wall Seal
5B6-5B8	Unprotected Wall Opening
5B6-5C4	Open Grating
5B7-5B5	Unprotected Wall Opening
5B8-5B6	Unprotected Wall Opening
5B9-5A1	Unprotected Steel Ceiling Frame
5B9-5C11	1/4-in. Steel Plate Covered Opening
5B10-5A2	Unprotected Steel Ceiling Frame
5B10-5C11	1/4-in. Steel Plate Covered Opening
5B11-5A3	Unprotected Steel Ceiling Frame
5B11-5C1	Unprotected Steel Floor Frame
5B12-5A3	Unprotected Steel Ceiling Frame
5B12-5C2	Unprotected Steel Floor Frame
5C3-5C11	Unprotected Wall Opening
5C4-5C11	Unprotected Wall Opening
5C5-5B1	Unprotected Steel Ceiling Frame
5C5-5C9	Non-rated Wall Seal
5C5-5C11	Non-rated Wall Seal
5C6-5B1	Unprotected Steel Ceiling Frame
5C6-5C9	Non-rated Wall Seal

Table 3.4 (Continued)

Description(s) As to Why Selected Fire Zones at LaSalle Do Not Equal Fire Areas as Defined in This Report

Barrier Between	Reason for Barrier Failure
5C6-5C11	Non-rated Door Non-rated Wall Seal
5C7-5B2	Unprotected Steel Ceiling Frame
5C7-5C10	Non-rated Ventilation Seal
5C7-5C11	Non-rated Door Non-rated Wall Seal
5C8-5B2	Unprotected Steel Ceiling Frame
5C8-5C10	Non-rated Wall Seal
5C8-5C11	Non-rated Wall Seal
5C9-5C11	Non-rated Door Non-rated Wall Seal
5C9-5B1	Unprotected Steel Ceiling Frame
5C10-5C11	Non-rated Door Non-rated Wall Seal
5C10-5B2	Unprotected Steel Ceiling Frame
5D1-7C4	Non-rated Watertight Door
5D2-8C3	Non-rated Watertight Door
5D3-5B1	Open Grating Open Stairwell
5D3-5E1	Non-rated Hatch Open Stairwell
5D4-5B2	Open Grating Open Stairwell
5D4-5E2	Non-rated Hatch Open Stairwell
5D5-5C11	Open Grating

Table 3.4 (Continued)

Description(s) As to Why Selected Fire Zones at LaSalle Do Not Equal Fire Areas as Defined in This Report

Barrier Between	Reason for Barrier Failure
5E1-5D3	Open Stairwell 1/4-in. Steel Plate Covered Opening
5E2-5D4	Open Stairwell 1/4-in. Steel Plate Covered Opening
6A-6B1	Open Stairwell
6A-6B2	Ladder Openings
6A-6C	Unprotected Wall Opening
6B2-6B3	Unprotected Wall Opening
6D-5C11	Non-rated Ceiling
6D-6E	Non-rated Stairwell
7A1-7A2	Non-rated Door
7A2-7A3	Non-rated Door
7B1-7C1	Non-rated Hatch
7B2-7C2	Non-rated Hatch
7B3-7C3	Non-rated Hatch
7C4-7C5	Non-rated Watertight Door
7C5-7C6	Non-rated Watertight Door
Unit 2 Diesel Generator Building similar to Unit 1 Diesel Generator Building above corrected for opposite hand geometry.	
9A-9B	Unprotected Steel Floor Frame
9A-9C1	Unprotected Steel Floor Frame
9B-9A	Unprotected Steel Ceiling Frame
9B-9C3	Unprotected Steel Floor Frame

Table 3.4 (Concluded)

Description(s) As to Why Selected Fire Zones at LaSalle Do Not Equal Fire Areas as Defined in This Report

Barrier Between	Reason for Barrier Failure
9B-9C4	Unprotected Steel Floor Frame
9C1-9B	Non-rated Ceiling System
9C1-9A	Unprotected Steel Ceiling Frame
9C3-9B	Unprotected Steel Ceiling Frame
9C3-9D1	Non-rated Floor System
9C4-9B	Unprotected Steel Ceiling Frame
9C4-9D1	Non-rated Floor System
9D1-9C3	Non-rated Ceiling System
9D1-9C4	Non-rated Ceiling System
10A1-10A2	Non-rated Doors
10A1-10B1	Non-rated Doors
10A2-10A1	Non-rated Doors
10B1-10A1	Non-rated Door
10B1-10C3	Open Stairwell
10C1-10C3	Non-rated Door
10C2-10C3	Non-rated Door
10C3-10B1	Open Stairwell
10C3-10C1	Non-rated Door
10C3-10C2	Non-rated Door

(text continued from page 3-26)
This section of the letter goes on to mention that in some situations a "water curtain" may serve as a barrier between redundant systems. However, for this analysis, fire areas are defined by physical structures (e.g., walls, ceiling, floor) as stated above.

A slightly more liberal interpretation of a fire area, than that presented above, was actually used in this analysis in that a fire area was considered to be an area that has walls, ceiling, floor and penetrations with <u>some</u> fire rating, not necessarily a 3-hr. rating. No accounting was made of the fuel load in the plant areas, since this was explicitly evaluated in a separate task. It was also assumed that perimeter walls, where one side interfaces with the outside environment and one side sees the plant, would also be treated as rated fire barriers. The rationale behind this is that: (a) since external fires are beyond the scope of this analysis, perimeter walls are not subject to fire threat, hence it makes no difference as to what their fire rating may be, and (b) if a fire occurred in one of these locations, it would not be able to spread to any other location (assuming the ceiling and floor are fire rated) but would rather be exhausted to the external environment.

The second definition refers to Fire Zones. Generic Letter 83-33 provides additional guidance on this subject by way of example:

> "The definition of "fire areas," noted above, is predicated on sound fire protection engineering principles as they apply to limiting the fire and fire suppressant damage to redundant shutdown equipment and cables. Fire areas defined by non-physical boundaries, such as "logical divisions" or "equipment groupings," may not necessarily restrict fire and smoke spread, and do not necessarily provide reasonable assurance that the limits of fire or fire suppressant damage to shutdown systems have been defined."

Coupling this with the fact that open stairwells and hatchways do not define the boundaries of a fire area, implies that in some respects fire zones are defined for convenience, i.e., there may be a room that has various openings, but the room itself is defined as a fire zone which uniquely identifies its location in the plant and the components found there, but it is not technically a fire area (i.e., penetrations are not fire rated). Therefore, for this analysis, a "<u>Fire Zone</u>" will be defined as an enclosure that conveniently identifies a specific location in the plant, but it does not have at one or more locations fire rated walls, ceilings, floors, or penetrations (e.g., doors, gratings, non-fire dampered ventilation ducting, etc.).

At LaSalle, the Fire Hazards Analysis discusses the plant-specific locations in terms of fire zones. In some cases, a "Fire Zone" is the same as a "Fire Area," whereas in other cases a group of "Fire Zones" actually should make up one "Fire Area." Table 3.3 lists all the fire areas defined for this analysis and the corresponding fire zones that may

make up the area. In some cases, these zones have been subdivided further into locations. Locations represent the finest level of detail for which component and cable locations were defined. The locations were defined in conjunction with the seismic and flood analysis which have different zone and/or barrier definitions.

3.2.3 Procedure and Associated Assumptions

The procedure used in defining fire areas is composed of the following steps:

a. Gather together all of the reference documentation available on the plant (as a minimum; General Arrangement Drawings, Appendix H and Section 9.5-1 of the Final Safety Analysis Report (FSAR)).

b. Using the reference documentation, create a document that summarizes all the features of a given fire zone (such things as wall fire ratings, suppression in the zone, stairwells, etc.).

c. Using the document from Step b, and the definition of a fire area presented earlier, determine which single fire zones meet the requirements to be a fire area.

d. Once single fire areas have been determined, look for combinations of the remaining fire zones that can be considered equal to a fire area (both in the horizontal and vertical planes).

e. With fire areas of interest now identified, visit the plant and verify as much as possible that those fire areas that have been identified are in fact fire areas.

The following paragraphs will expand on and present the assumptions used and insights gained in applying the procedure.

a. Reference Documentation

<u>Section 9.5-1, FSAR</u>--provides general overview fire protection information about the plant. Of greatest use are fire protection drawings showing which walls are fire rated, installation of suppression systems and their coverage areas, and safety-related cable tray routing in each zone.

<u>Appendix H, FSAR</u>--This is the detailed Fire Hazards Analysis description of the fire zones at LaSalle. This section of the FSAR not only describes the physical characteristics of the zones, but also lists the safety equipment found in each zone and provides a set of general arrangement (GA) drawings defining locations of fire zones.

b. Summary of Features of a Given Fire Zone

Parameters of interest that were looked at in each zone:

1. Wall, ceiling, and floor fire rating,

2. Installed detection and suppression systems,

3. Location of doors,

4. Fire rating of doors,

5. Location of stairwells,

6. Location of elevator shafts,

7. Fire rating of elevator shafts,

8. Designation as to whether a stairwell has entry doors, and if so, what the fire rating of the door is,

9. Zones one can access via doors, stairwells, gratings, hatches from the zone of interest,

10. Information as to any sealant used to seal between walls of the zone of interest and other zones (e.g., ventilation seal vice a fire retardant sealant),

11. Ventilation dampering information (e.g., fire dampers in inlet and outlet duct work to zone), and

12. Types of doors found in each zone (watertight versus fire door).

One critical assumption in this cataloging process is that the Appendix H information is accurate and the most up-to-date available. For LaSalle, the most recent amendment available was #64. This amendment was incorporated into the Appendix H that was used for this review. It should also be noted that this process should be iteratively performed to ensure that the data are correct.

c. Identification of <u>Single</u> Fire Areas

1. An assumption used in defining fire areas was that all barrier elements function as stated in Appendix H. For example, this means a 3-hr. rated fire door is capable of withstanding a 3-hr. fire and that it is structurally sound and shut. Similarly, a fire damper is assumed to instantaneously shut when a fire occurs to prevent the spread of flames, hot gases, and smoke.

2. It was also assumed that watertight doors and doors that Appendix H did not mention as having a fire rating were not fire rated. One exception to this assumption was the airlocks to containment for the following reasons:

   Zones 2J and 3J--Unit 1 and 2 Primary Containment

   The personnel airlocks are not technically fire rated. It was assumed that due to their construction (interlocked, inner door capable of withstanding pressures produced in a loss of coolant accident [nominally 60 psig] and because the zones are nitrogen inerted when operating) that these airlocks can be treated as essentially fire rated.

3. Ventilation dampers were assumed to have the necessary fire damper rating unless it was explicitly identified as otherwise.

4. The above assumptions, therefore, basically look at a fire barrier's resistance to flame and heat. The question of smoke propagation through the plant which might occur due to the delayed actuation of fire dampers is not addressed in this analysis.

d. Identification of Combinations of Fire Zones That Are Equivalent to Fire Areas

1. A second pass through the plant fire zones left (i.e., ones that have not been identified as single fire areas) was made to see if a combination of fire zones could make up one fire area. As an example, fire zones 7C4, 7C5, 7C6, and 5D1 are not fire areas because they have watertight doors that are not fire related. However, when one looks at how these zones are interconnected, it turns out that the doors into 5D1 from 2K are fire rated, and that the doors to 7C1, 7C2, and 7C3 are also fire rated, making the walls that butt up against the other zones fire rated. In this case then, fire zones 5D1, 7C4, 7C4, and 7C6 make up <u>one</u> fire area. This is an example of looking at fire zones that could potentially make up a fire area in the horizontal plane. The same was done for the vertical plane. The easiest way to do this was to start in the basement area of the plant and see if a fire or its products could progress upward to other zones. In looking at these vertical paths, fire areas need to be defined in the same manner as before. Therefore, if a watertight door is reached in this path, by our definitions, this would not constitute a fire barrier and the barrier would be breached. Open gratings or hatches or stairwells also violate a barrier. One must also be careful to look at the roof and floor ratings of each zone. It might appear

that there are no openings into a room but the roof or floor may not be fire rated. This approach is of primary use in the Turbine Building where there are many openings between zones.

2. An assumption used in this stage was that a fire can progress in any direction. Due to pressure differentials created by the fire, the hot gases, soot, products of combustion, etc., can flow both up and down. It was also assumed that this can take place no matter how large the room or where a fire starts. This assumption, which is used in all except two fire zones, may be shown to be overly conservative by subsequent analysis. However, for purposes of initially selecting fire areas, the assumption assures that no marginal barriers are accepted without further analysis.

3. Two zones had special assumptions applied to them as follows:

   Zone 1--Refueling Floor and Zone 5A3--Turbine Floor

   - Fire products coming up from below cannot appreciably go back down to other zones (although they may be able to progress on the same horizontal plane). This assumption was used since these zones are massive areas compared to other fire zones and have large volumes to diffuse the products of a fire.

   - If a fire starts in one of these zones, it cannot affect other zones. Again, due to the zones' massive sizes, heat and flames would not likely affect any other zone other than simply being exhausted to the outside environment. (Note: For these reasons, Zone 1 was included in two fire areas, one for each unit as shown in Figure 3.2.)

e. Plant Visit to Verify Fire Areas

1. An inspection of the plant was a mandatory part of the process in determining which fire zones were, in fact, fire areas. Several of the many reasons why an onsite visit is required prior to formalizing the fire areas found at the plant are listed below.

   - Verify: (1) What up to this point has been a paper review of fire areas for the plant and (2) how zones actually connect to each other.

   - Clarification of items that may have been unclear from drawings or the Appendix H descriptions.

   - Subtle items may be found that are not readily apparent from any of the reference documentation (e.g., cracks between slabs, internal partition methods, changes in

elevation in one zone that may appear from drawings to all be on the same level).

2. Because the purpose of the plant tour is to verify what has been gleaned from the reference documentation, this documentation directs one's attention to certain things. For example: the structural integrity of fire doors, proper ratings on these doors, ventilation openings, stairwell openings, elevator shafts, fire damper locations and actuation methods, and open gratings are of primary concern. However, during this visit, other items were examined that may be potentially important to this step of the analysis or to later steps in the analysis: how doors alarm; where do they alarm; what type of detection is provided for the zone; what type of suppression is provided for the zone (both automatic and manual); what style of cable trays are used in the zone (i.e., ladder, solid bottom or top types); how are cable trays stacked; are redundant trains in the same vertical stacking (at LaSalle this is a straightforward task since they label all their cable trays both with the type of cable found in the tray [power, control or instrumentation] and by color to indicate the division); basic locations of major equipment in the room; and penetration seal locations.

3. Useful insights were gained about the plant from this tour.

   For instance, in several instances fire doors would not shut on their own if they were opened a small amount because ventilation flow rates kept them ajar. Fire doors should be able to shut from any position on their own. The plant uses roving fire watches to correct the above problem.

   In this analysis, it was assumed that all protective penetrations for a fire area function as designed (i.e., fire doors shut). This does not eliminate a fire zone with a door held ajar by ventilation from being a fire area; it <u>is</u> a useful insight for the later step of evaluating the barrier effectiveness (i.e., the chance a fire door will be open has increased because of the ventilation situation).

4. Design changes not reflected yet in the reference documentation were observed. Several instances were found that illustrate this:

   - An auxiliary switchgear room containing one unit's remote shutdown panel had a 3-hr. divider wall in the zone which effectively made this into two zones.

   - The computer room north wall had been dismantled and was being rebuilt to allow for more space in the room.

- The control rooms main double doors were scheduled to be replaced with bulletproof <u>and</u> fire rated doors.

5. Two days were allotted for the inspection of the plant. Since LaSalle has approximately 160 total fire zones, a hierarchy was developed to determine which zones were to be inspected. LaSalle is a two-unit plant that has some areas that are shared by both units and two sets of nearly identical areas (i.e., the turbine building is a mirror image along its center line). It seemed reasonable to assume that if an inspected zone has a mirror image in the other unit, then only one zone needed to be inspected out of the two. This was the basic approach used in determining the zones that needed to be inspected.

   The list of areas designated for inspection on the plant tour was determined as follows:

   - Inspect all single zones that appear to be fire areas (based on the documentation review).

   - For the rest of the zones that may be subsets of a fire area, inspect zones that are unique to Unit 2 (based on the fact this PRA is being performed for Unit 2).

   - Inspect zones essentially shared by Units 1 and 2 (example: fire zone 5C11, Lake Screen House).

   - Fire zones not part of either Unit 1 or 2, such as those within the Service Building, Radwaste Processing Facility and the Off-Gas Filter Building, should be examined as time permits. (It was felt that these zones would not significantly affect the estimated core damage frequency and if they were not examined in the plant tour, the Appendix H and general arrangement drawings would be sufficient to define fire areas for these buildings.)

   The actual inspection of the LaSalle plant took place on May 10 and 11, 1984. The participants included two Sandia personnel, a representative from Firepro, Inc., who was subcontracted by Sandia to ensure the plant was inspected from a fire protection engineering standpoint, and the LaSalle Station Fire Marshal.

   Of the 120 some zones originally designated for inspection, approximately 70 fire zones were inspected. These zones principally comprised items (a), (b), and (c) above, and the Off-Gas Filter Building and Lake Screen House. Most of the fire zones that were not inspected were not available due to radiation levels prohibiting entry to the zone. The Radwaste and Service Buildings were not inspected due to time constraints. The zones not inspected were still defined and

included in the screening analysis; there was just no visual check of the information unless the zone remained after the screening analysis and was evaluated in the final analysis.

3.2.4 Results

The results of this analysis are presented in Tables 3.3 and 3.4, and in Figures 3.1 and 3.2. The presentation style employed is as follows:

a. A "new" set of fire areas was identified for LaSalle. A listing of these fire areas, along with an associated listing of the LaSalle fire zones that make up each of these areas, is provided. (Note: These "new" fire area designations will not be found in the LaSalle documentation and are defined here for convenience to avoid any confusion between fire zones at LaSalle) (Table 3.3).

b. For those LaSalle fire zones that are not fire areas, a description of the reason(s) as to why these zones are not fire areas is included (Table 3.4).

   Note: Items (a) and (b) were constructed based on a review and inspection of LaSalle by Sandia and its subcontractor (Firepro, Inc.). The definitions and assumptions previously presented were then applied to the information to generate these listings.

c. Out of 160 fire zones at LaSalle, there were 54 fire areas identified.

d. Finally, a set of general arrangement drawings reflecting the above information is provided. These drawings outline the fire areas and their associated identification numbers so that a convenient visualization of the plant fire areas can be made (see Figure 3.2). (Also included are the original LaSalle <u>fire zone</u> mappings with subdivision into locations, Figure 3.1.)

3.3 <u>Initiating Event Frequencies</u>

Data on fires in light water reactors (LWR) have been analyzed in several studies.[4,7,8] Although they have been performed independently, they have some common aspects. For example, almost all studies have used License Event Report (LER) data from the Nuclear Regulatory Commission (NRC). All have reported the overall frequency of fires of approximately 0.16 per reactor year on a plant wide basis.

To determine fire initiating event frequencies, there are two kinds of information needed: (1) the number of fire incidents that have occurred in specific compartments during commercial operation, and (2) the number of compartment years that the nuclear industry has accumulated. Most of

the data for the first part come from reports of insurance inspectors to American Nuclear Insurers (ANI), although other sources are also used, e.g., the NRC. While the NRC requires the reporting of fires that, in some way, affect the safety of the plant, the ANI has more stringent requirements in the sense that all fire events must be reported. Compartment years are computed by adding the age of all compartments (within a certain category of compartments) of the units that were in commercial operation by the end of June 1985. The age is defined as the time between first commercial operation and the end of June 1985 (or date of decommissioning). The combination of specific fire locations and compartment age is given in Table 3.5. Even though fire events that occurred when any given plant was shutdown were used, an event was only included if it could be postulated that it also might occur when the plant was at power. The LaSalle plant was divided into eight separate compartments or areas. These are (1) the control room, (2) cable spreading room, (3) diesel generator room, (4) electrical switchgear room, (5) battery room, (6) reactor building, (7) turbine building, and (8) auxiliary building. In most plants, the first five areas are single compartments while the other three are typically large buildings. Appendix C lists the generic fire event data for each of these eight areas.

Table 3.5

Statistical Evidence of Fires in Light Water Reactors
(As of June 1985)

Area	Number of Fires r	Number of Compartment Years T
Control Room	3	681.0
Cable Spreading Room	2	747.3
Diesel Generator Room	37	1600.0
Reactor Building	15	847.5
Turbine Building	21	654.2
Auxiliary Building	43	673.2
Electrical Switchgear Room	4	1346.4
Battery Room	4	1346.4

To obtain fire area-specific initiating frequencies, a partitioning method is required. Partitioning allows the analyst to subdivide the

frequency of fire occurrence from a large building (e.g., auxiliary building) to a specific room or area within that building. Also, further partitioning can occur within a specific room or area. One method of partitioning is to ratio the areas of fire areas within a building. This assumes that the probability of fire occurrence is dependent only upon the amount of area a fire area contains. Another method of partitioning is to examine each fire area to find factors important to probability of fire initiation, such as the amount of electrical components and cabling, the fire loading, whether the fire area is controlled, and how often the fire area is occupied.

The fire events and operating years for the eight plant areas were obtained using the fire data base developed by Wheelis.[9] To determine operating years for electrical switchgear rooms and battery rooms, auxiliary building operating years were doubled. A survey of all U.S. LWRs indicated that there is an average of 2.25 trains of emergency switchgear and associated batteries per plant. However, it is known that some plants such as Surry locate both trains of emergency switchgear in one fire zone. So it was assumed that an average number would be close to two per plant for both types of rooms. This was used to generate a rough generic estimate of the fire frequencies and was not used directly in the analysis (i.e., see below for what was used for the detailed calculation).

To aid partitioning within a large building or within a specific fire area in that building, a checklist was used on the initial plant visit to determine the most probable fire initiating sources. Also, data on past fire occurrences were thoroughly reviewed. For instance, control room data indicate that fires have only occurred in electrical cabinets. Therefore, area ratios were developed based on cabinet area within this respective area.

The generic fire occurrence data were updated using a method developed by Iman and Hora[10] to determine plant-specific LOSP frequencies. By changing the data from LOSP events to fire events and determining explicitly the number of rooms, this method can be used to calculate plant-specific fire-initiating event frequencies. This Bayesian approach models the incidence rate of fires for each plant relative to the incidence rates of all other plants, and the posterior distribution is found for the incidence rate for each plant.

For this analysis, the gamma distribution is used as a model as described in Reference 10, although many other distributions could be used. The probability density function for the two-parameter gamma distribution is:

$$h(k) = f_c(kua,b) = b^a[C(a)]^{-1}\, k^{a-1}\, e^{-bk} \quad k \geq 0,\ a,b > 0 \quad .$$

The parameters a and b are unknown, and the non-informative prior is:

$$p(a,b)\ a\ 1/(ab) \quad a,b > 0 \quad .$$

The likelihood function of the datum (s_i, t_i) is Poisson

$$L\left(s_i, t_i \middle| \lambda_i\right) = \left(\lambda_i t_i\right)^{s_i} e^{-\lambda_i t_i} / s_i!$$

The posterior density can, therefore, be expressed as:

$$p^*\left(\alpha, \beta, \lambda_0, \ldots, \lambda_n\right) =$$

$$\frac{p(\alpha,\beta) \prod_{i=0}^{n} \left[h\left(\lambda_i\right) L\left(s_i, t_i \middle| \lambda_i\right)\right]}{\int_0^\infty \int_0^\infty \int_0^\infty \cdots \int_0^\infty p(\alpha,\beta) \prod_{i=0}^{n} \left[h\left(\lambda_i\right) L\left(s_i, t_i \middle| \lambda_i\right)\right] d\alpha \, d\beta \, d\lambda_0 \ldots d\lambda_n}$$

In this way, plant-specific fire-initiating event frequencies and distributions were developed. Table 3.6 lists the LaSalle specific fire-initiating event frequencies for the five areas with contributions to core damage frequency of greater than 1E-09 per year.

Table 3.6

LaSalle Fire Initiating Event Frequencies (/yr.)

Area	Mean	5th Percentile	50th Percentile	95th Percentile
Control Room	1.85E-3	<1.0E-8	<1.0E-8	3.30E-3
Cable Spreading Room	6.48E-3	<1.0E-8	<1.0E-8	2.68E-2
Turbine Building	3.36E-2	2.40E-3	2.50E-2	9.64E-2
Auxiliary Building	4.92E-2	9.02E-3	4.48E-2	1.21E-1
Elec. Switchgear Room	7.97E-3	7.37E-6	3.61E-3	7.95E-2

3.4 Determination of Accident Sequences to be Evaluated

In order to integrate the internal and external event analysis, the LaSalle internal event trees and the accident sequences defined by them were used in the fire analysis. The internal event transient event tree is presented in Figure 3.3.

Upon inspection of this tree, two types of sequences can be seen: (1) sequences 101 and 100, and (2) sequences 1-99. Sequences 101 and 100 are core damage sequences involving, respectively, failure of all high pressure injection and failure to depressurize resulting in core damage

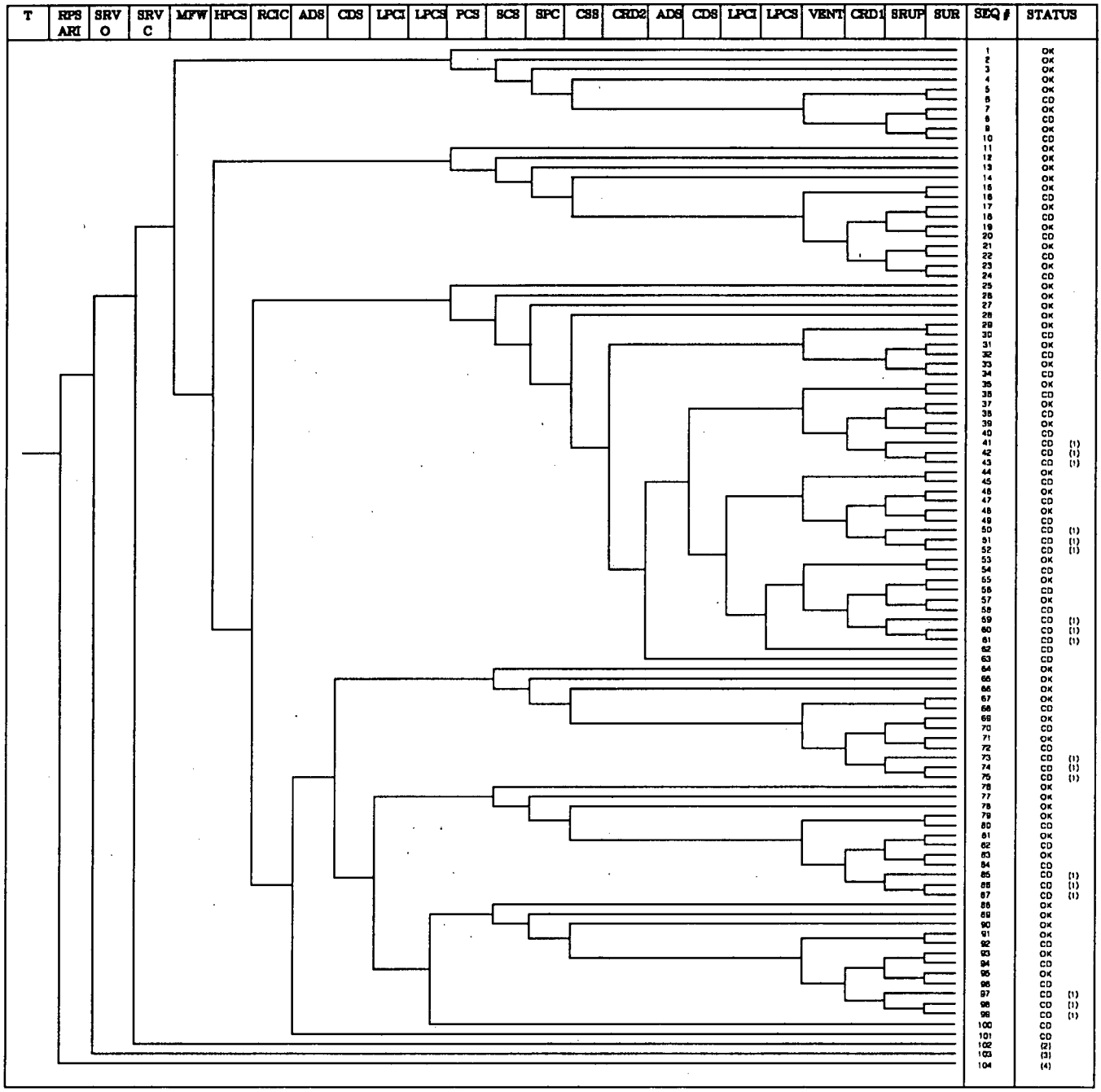

(1) USED TO RESOLVE CORE DAMAGE RECOVERY, LOW PRESSURE SYSTEMS FAIL ON ADS CLOSURE AT ABOUT 85 PSIG, BOILOFF AND CORE DAMAGE OCCUR BEFORE CONTAINMENT FAILURE (MEAN VALUE, 195 PSIG).

(2) TRANSFER TO LOCA TREE (1 SRV FTC = SMALL LOCA, 2 SRV FTC = MEDIUM LOCA, AND >= 3 SRV FTC = LARGE LOCA).

(3) TRANSFER TO LOCA TREE (OVERPRESSURE CREATES LOCA, PROB. OF 18 SRV FTO NEGLIABLE).

(4) TRANSFER TO ATWS TREE.

Figure 3.3 LaSalle Transient Event Tree

Figure 3.3 Transient Event Tree (Continued)

Definition of Acronyms

ADS	Automatic Depressurization System.
CD	Sequence results in core damage.
CDS	Condensate System.
CRD1	Control Rod Drive System (success is one pump works).
CRD2	Control Rod Drive System (success is two pumps work).
CSS	Containment Spray System (mode of RHR).
HPCS	High Pressure Core Spray System.
LPCI	Low Pressure Coolant Injection System (mode of RHR).
LPCS	Low Pressure Core Spray System.
MFW	Main Feedwater System.
OK	Sequence does not result in core damage.
PCS	Power Conversion System (another name for Main Steam System).
RCIC	Reactor Core Isolation Cooling System.
RPS/ARI	Reactor Protection/Alternate Rod Insertion System.
SCS	Shutdown Cooling System (mode of RHR).
SPC	Suppression Pool Cooling System (mode of RHR).
SRUP	Containment failure occurs by small rupture (i.e. Leak), containment takes > 2 hrs. to depressurize. Complement is containment fails by large rupture, containment takes < 2 hrs. to depressurize.
SRV/C	Safety Relief Valves all reclose.
SRV/O	Safety Relief Valves open sufficiently to prevent RPV overpressurization.
SUR	Systems still available to mitigate accident survive severe environments created after containment failure or venting.
VENT	Containment Venting System.
T	Transient Initiating Event.

at high vessel pressure or failure of all high and low pressure injection, but successful depressurization resulting in core damage at low vessel pressure. Sequences 1-99 are all what are termed TW sequences; that is, sequences in which injection into the primary system is successful but containment heat removal fails. These sequences are resolved into core damage by asking questions related to containment pressurization and failure and the effects of the containment response upon the systems cooling the core.

For the fire analysis, sequences 101 and 100 were evaluated individually using the same fault trees used in the internal events analysis. These fault trees were constructed to include multiple spurious actuations that result in system failure. For the internal analysis, spurious actuations were mostly negligible; but for fire they cannot be ruled out. For sequence 100, the success of ADS was considered separately by solving the ADS fault tree and seeing if any fire areas were the same as for the systems that failed. Except for the control room, there were none, since ADS is essentially independent of the other systems.

It was decided not to explicitly evaluate sequences 1-99 using the success states since the fire areas were large and using the DELTRM procedure in the Set Equation Transformation System (SETS) computer code[11,12] to delete these areas from the failure equation would be grossly non-conservative. (If a fire did not extend to cover the whole area, then it would be possible for some system with components within the area to fail, but DELTRM would assume that all components in the area in the succeeding system did not fail from the fire. This has to do with the fact that the components are mapped into the area not to a specific fire scenario. One could get around this by defining smaller areas or mapping the components into specific fire scenarios; both of which would require more effort.)

Given that a fire in an area would not necessarily propagate to include the whole area, it is possible for a system that succeeds in sequences 1-99 to have components that would remain unaffected by the fire. This is not true for all systems but only for those that are independent of the containment heat removal systems (that must fail to create these sequences). The only injection system that is independent of the heat removal systems (PCS, SCS, SPC, CSS, and VENT) is HPCS, the high pressure core spray system, which has its own train of AC power and support systems.

Fire-induced failure of both trains or one train of the heat removal systems and random failure of the other train will almost certainly result in failure of LPCI and LPCS since they are different modes of the RHR system, as are the SCS, SPC, and CSS systems (see Chapter 2 for a description of the modes). This leaves MFW, RCIC, and CDS as the other injection systems to evaluate. MFW and CDS have many components in the same location as the PCS system, since the three systems are related as described in Chapter 2. Failure of PCS by fire will very likely also result in MFW and CDS failure. RCIC also has support systems, power, and control cabling in the same locations as the heat removal system and would most likely fail also.

In order to simplify the analysis, two subsequences consisting of only the containment heat removal systems were analyzed; one corresponding to the high pressure sequences 1-63 and the other corresponding to the low pressure sequences 64-99. The success states were evaluated separately as described in Section 3.5.5.1. The final result was that the fire-induced failure of the SCS, SPC, CSS, and VENT systems also implied that PCS failed and that all injection systems except for HPCS also failed, so only sequences 11-24 on the internal transient event tree remained.

The sequences were renumbered for the fire analysis and are listed in Table 3.7. Fire sequence 1 corresponds to internal event sequence 101, fire sequence 2 corresponds to internal event sequence 100, fire sequence 3A corresponds to internal event sequences 64-99, and fire sequence 3B corresponds to internal event sequences 1-63.

3.5 Detailed Description of the Initial Quantification Analysis

The initial quantification analysis is required to reduce the number of potential fire-induced scenarios to only those which have the potential to be probabilistically significant to core damage frequency.

Table 3.7

Fire Sequences Evaluated for LaSalle

SEQ-1 = MFW * RCIC * HPCS * ADS .	(TQUX)
SEQ-2 = MFW * RCIC * HPCS * CDS * LPCS * LPCI.	(TQUV)
SEQ-3A = SCS * SPC * CSS * VENT .	(TW, Low pressure)
SEQ-3B = PCS * SCS * SPC * CSS * VENT.	(TW, High pressure)

The initial quantification consists of a vital area analysis (location mapping) of components as well as control and power cables for all components that were modeled in the fault trees. This information resulted in a transformation block used in conjunction with the SETS computer code to solve all front-line systems and then solve all of the identified sequences (Table 3.7) of Section 3.4.

The fire occurrence frequency for each area was set to 1.0 and, given a fire, all components within that area were assumed to fail. The output of this process was accident sequence cut sets which had fire area combinations as well as random failures (i.e., not fire related) included. Truncation of cut sets at a random failure probability of 1E-04 was accomplished which is equivalent to truncation of internal event cut sets at approximately 1E-08 since the fire frequency, after accounting for the ratio of the area affected by a specific fire to the area for which fire frequency data is available, is close to 1E-04 and was arbitrarily set for screening purposes to 1.0.

3.5.1 Location Analysis for Fire

The external events analysis portion of the Risk Method Integration and Evaluation Program (RMIEP) identified the areas and associated random failure events in a nuclear power plant that would be affected as the result of some occurrence outside the normal scope of plant operation. RMIEP evaluated the LaSalle nuclear power plant for the effects of fire using the SETS computer code[11,12] to perform the analysis. The SETS code symbolically manipulates Boolean equations. The computer code is an interpreter which reads, interprets, and executes SETS user programs. It has been used in fault tree analysis for many years and in more recent years has been an integral tool in accident sequence analysis.

The basic inputs for an external events analysis consist of front-line and support system fault trees, probability values for each primary event, location data associated with each primary event, and the relationship of these locations to fire areas. A location is defined as the smallest unit of area in which equipment relevant to the analysis resides and will also be called a subzone. Fire areas are defined as a group of one or more locations having a 3-hr. fire barrier or any rated fire barrier. Minimal cut sets consisting of fire areas and/or associated failures of random events are obtained for each front-line system. Finally, system minimal cut sets for fire are combined to obtain minimal cut sets for the sequences. The sequences were determined from the event trees used in the internal events analysis (Volume 4 of this report) and are described in Section 3.4. Examples of SETS user programs illustrating the steps used in the RMIEP external event analysis for LaSalle are given in Appendix D.

The fault trees from the internal event analysis were used to identify all components (i.e., switches, contact pairs, etc.) requiring cabling. Plant schematics were used to map them into locations. All cables were identified for the modeled equipment from the master electrical wiring diagrams. Transformation equations were formed to link cables with the components they would fail in the fault tree. The Sargent and Lundy Engineers cable routing data tape was used as data input for a FORTRAN program which extracted routing points for all the modeled cables. The output from this program was a set of equations equating cables to routing points. The transformation was of the form:

CBL-1 = RP1 + RP2 + RP3.

.

.

.

CBL-N = RP75 + RP93 + RP1076.

Equation Set 1

Another set of equations relating routing points to locations was generated by using information from the plant cable routing diagrams. The transformation was of the form:

RP1 = LOC-X.

.

.

.

RP1076 = LOC-Y.

Equation Set 2

A plant walkdown was performed to determine the fire barriers and their relationship to the areas designated as locations; this was used to construct a set of equations relating the locations to the fire areas. The transformation was of the form:

LOC-X = FRZ-1.

.

.

.

LOC-Z = FRZ-20.

Equation Set 3

The SETS code was used to perform the calculations necessary to generate the data for the phase of the fire analysis that involved cable routing data. The equations mapping cables to routing points were loaded with the equations mapping the routing points to locations. Substitution for each cable was made to obtain a set of equations mapping cables to locations. The transformation was of the form:

CBL-1 = LOC-X + LOC-Y.

.

.

.

CBL-N = LOC-W + LOC-T.

Equation Set 4

A transformation equation was formed to represent each primary event as a random failure with associated location data and cables. The transformation was of the form:

A = AX + LOC-X + LOC-Y + CBL-1.

B = BX + LOC-P + CBL-4 + CBL-5.

C = CX.

E = EX.

.

.

.

P = PX + LOC-A.

Q = QX + LOC-A.

Equation Set 5

The "X" is appended to the name to avoid circular substitution in the Boolean equations. Some events such as flags did not have locations or cables associated with them. These events simply had their event names changed to the appended "X" form.

Next the cable to location equations were loaded with the equations mapping events to randoms plus locations and cables. Substituting for each event resulted in equations mapping each event to itself and locations and included the cable locations associated with each event. The transformation was of the form:

A = AX + LOC-X + LOC-Y.

.

.

.

P = PX + LOC-W + LOC-Z.

Equation Set 6

Although the steps in making the necessary transformations to include the cable information are very straightforward, the large number of events and cables made it necessary to break the computer runs for each mapping into several sections to accommodate the size of the problem. In retrospect, this aspect of the problem could probably be handled as well or better using a good data base management system.

The RMIEP internal event analysis, like most internal event analysis of any size, obtained the system cut sets for each front-line system by determining a set of independent subtrees (IST) and a fault tree stem for each front-line system. To utilize these same fault trees in the external events analysis, the independent subtrees which act as "super events" similar to primary events must also be transformed with associated locations. This was approached as follows:

Suppose the original ISTs are:

IST-1 = A + B.

IST-2 = C * E + P.

.

.

.

IST-9 = P + Q.

Equation Set 7

Rewriting the original ISTs (Equation Set 7) with an "X" appended gives:

IST-1X = AX + BX.

IST-2X = CX * EX + PX.

.

.

.

IST-9X = PX + QX.

Equation Set 8

Using the information for transforming primary events to locations (Equation Set 6), and substituting for locations in the original ISTs (Equation Set 7) gives:

IST-1 = AX + LOC-X + LOC-Y + BX + LOC-P.

IST-2 = CX * EX + PX + LOC-J.

.
.
.

Equation Set 9

IST-9 = PX + LOC-A + QX + LOC-A.

Regrouping each of the above equations (Equation Set 9) and simplifying by replacing components of the original IST-J with "X" appended (Equation Set 8) by IST-JX results in:

IST-1 = AX + BX + LOC-X + LOC-Y + LOC-P.

= IST-1X + LOC-X + LOC-Y + LOC-P.

.
.
.

Equation Set 10

IST-9 = PX + QX + LOC-A + LOC-A.

IST-9 = IST-9X + LOC-A.

for each equation.

Now the IST-JX is composed of the same primary events (except for the appended "X") as the original IST-J. For computational purposes, the value of the original IST-J can be associated with the IST-JX for evaluations involving probability calculations. (A method for accomplishing the above substitutions using SETS is explained in detail in Appendix D.) The simplified transformation equations for these ISTs must be included with the location transformation data for the primary events in order to map the ISTs, which are treated as primary events in this portion of the analysis, into their associated locations.

3.5.2 System Fault Trees

3.5.2.1 Solving Front-Line System Fault Trees

The SETS user programs determined for each front-line system during the internal events analysis were used in obtaining the external event front-line system cut sets. If no internal events analysis has been previously performed for the systems being analyzed, the SETS user code for each front-line system can be generated using the techniques described in Reference 12. Only slight modifications are required to change the internal events SETS user programs for use in the external events analysis. These include loading the transformation equations (Equation Set 6 and Equation Set 10 from above), setting internal initiating events to /OMEGA (i.e., zero), providing probability values for each event that appears in the transformation equations, and changing the probability truncation level.

Primary events in the system fault trees which act as initiators were set to PHI (i.e., zero, PHI = /OMEGA) to remove their effect from the external event analysis. This was accomplished by using equations of the following form:

```
      T1IEX = /OMEGA.
      T2IEX = /OMEGA.
          .
          .                                   Equation Set 11
          .
   MLOCAIEX = /OMEGA.
   SLOCAIEX = /OMEGA.
```

These equations have the appended "X" form of the primary event and the last occurrence of a hyphen is removed to ensure the event name does not exceed the 16 character maximum allowed by the SETS code.

For the RMIEP external event analysis, the probability of random failures was truncated at 1.0E-4 so that the final cut set frequency cutoff would be similar to that used in the internal events analysis.

The value block for the RMIEP external event analysis consisted of (1) the primary events with the appended "X", (2) the original ISTs with an appended "X", and (3) the locations. Locations were given a value of 1.0 while the components and ISTs retain the same value used for the internal events analysis.

After the transformation equations and value blocks were established, they were loaded with the initiator equations and each front-line system fault tree; a SETS user program was then executed to obtain each front-line system's cut sets in terms of locations and random failures. It is important to note that if the ISTs contain cross-products of primary events and locations, the system cut sets may not be minimal until the substitution and reduction is made for the ISTs. Substitution was not made for the ISTs until after the system cut sets had been combined to fro the fire sequences in order to minimize the size of intermediate results.

3.5.2.2 Determining System Cut Sets For Fire

Since the LaSalle nuclear power plant was evaluated for more than one external condition, the system minimal cut sets were obtained in terms of locations and random failures. Thus, with only solving for the system cut sets once, the system cut sets could be transformed to the external condition of interest (i.e., fire areas, flood scenarios, etc.) and/or relevant sequences calculated.

The RMIEP front-line system models, in terms of locations and random failures, contained too many cut sets to efficiently compute sequences before making the transformation to the external event of interest. This transformation was done by using a set of equations to map each location to a fire area. These equations were of the form:

LOC-A = FRZ-D.

LOC-B = FRZ-K.

LOC-C = FRZ-D.

.
.
.

Equation Set 12

LOC-X = FRZ-P.

LOC-Y = FRZ-Q.

Several locations generally mapped to the same fire zone. A SETS user program was executed to obtain the front-line system cut sets in terms of fire areas and random failures. The SETS user program loaded the front-line system cut sets and transformation equations (Equation Set 12) into the equation file, executed the SETS Substitute Equation Procedure (SUBINEQN) to make the change from locations to fire areas, and then used the Reduce Equation Procedure (REDUCEQN) to simplify the equations. This process resulted in considerably fewer cut sets for each of the front-line systems. The minimal cut sets for each front-line system were printed for analyst review using the Print Disjunctive Normal Form Procedure (PRTEQNDNF).

3.5.3 Determining Fire Sequences

The fire sequences evaluated for LaSalle were shown previously in Table 3.7 and described in Section 3.4. The portion of the cut sets composed of random failure events was truncated at a probability of 1.0E-4 for the fire sequences. Fire areas were given a probability value of 1.0 for computational purposes. A sequence segment composed of systems MFW, RCIC, and HPCS was computed and saved on the block file since it is part of both Sequence 1 and Sequence 2. Sequence 3B was computed by combining the PCS fire system cut sets with Sequence 3A cut sets.

The fire sequence cut sets contained independent subtrees of the form IST-JX. To obtain the sequence cut sets in terms of primary events, the equations for the original ISTs, the equations mapping each primary event to its appended "X" form, and a set of equations mapping IST-JX to IST-J were loaded with the cut sets for each fire sequence into the equation file by the SETS user program. The Substitute in Equation Procedure and Truncate on Term Value Procedure (TRNTRMVAL) were applied to complete the substitution to independent subtrees for each sequence.

The cut sets for each fire sequence contained one or more fire areas and/or random failures having a probability value greater than or equal to 1.0E-4. These cut sets provided preliminary results for the analyst's review.

3.5.4 Initial Screening of Accident Sequence Cut Sets

3.5.4.1 Probabilistic Screening of Core Damage Fire Scenarios Before Plant Visit

In order to reduce the number of cut sets in each of the sequences being analyzed, the following screening procedure was utilized:

a. Credit was taken for recovery of random failures that could be done in a simple action from the control room.

b. Cut sets that contain only a single fire area were kept, regardless of the area.

c. Cut sets that contained two fire areas (doubles) were screened assuming the following:

   1. A fire initiation frequency of 1E-04/yr., and

   2. A barrier failure probability of 0.1/demand between the fire areas.

   These screening assumptions result in a failure probability of 1E-05 per fire event. Therefore, any double fire areas that are combined with random failures that occur with a frequency of 1E-03/demand or less can be discarded. This cutoff is based on the cut set frequency cutoff of 1E-08/year that was used in the Level 1 PRA for LaSalle.

d. Cut sets that contained three fire areas (triplets) were screened as follows:

   1. Fire initiation frequency of 1E-04/yr., and

   2. Barrier failure frequency of 0.1/demand on each side of the fire area that is adjacent to the other two areas.

   These screening assumptions result in a failure probability of 1E-06 per fire event. Therefore, any triple fire areas that are combined with random failures that occur with a frequency of 1E-02/demand or less can be discarded.

Using the above screening criteria resulted in the fire areas listed in Table 3.8 that required visiting on the ensuing plant trip.

The fire area combinations in Table 3.8 appeared in one or more of the core damage transient sequences. Before going on the plant trip, it was not necessary to separate the fire areas according to the sequences in which they appeared, since the information to be gathered is independent of the sequence. The results of the plant visit are given in Section 3.5.4.2.

Table 3.8

List of Fire Areas that Required Investigating on Plant Visit

Fire Area	Room(s)	Description
The following single fire areas to be visited:		
E	TB	Turbine Building
D	RB	Reactor Building
S	4E2-1	Unit 2, Auxiliary Equipment Room
T	4E2-2	Unit 2, Auxiliary Equipment Room
AA	5B13-2	BOP Cable Area, North
F	4A,4B,5A4	Ventilation Equipment Floor and Cable Area
P	4D4	RPS Electrical Equipment Room
DD	5D2,8C3,8C4,8C5	Unit 2, HPCS, RHRSW Pump Room
W	4E4	Unit 2, Division 2, Essential Switchgear Room
N	4D2	Unit 2, Cable Spreading Room
Z	4F3	Auxiliary Building, Rad Chemistry Offices
AC	4E4-1	Corner of Unit 2, Division 2, Essential Switchgear Room
Y	4F2	Unit 2, Division 1, Essential Switchgear Room
G	4C1	Control Room
PP	8B2, 8C2	Unit 2, Division 2, Standby Diesel Generator and Fuel Tank Room
CC	5D1,7C4,7C5,7C6	Unit 1, HPCS, RHRSW Pump Room
The following double fire areas to be visited:		
E DD	TB,5D2,8C3,8C4,8C5	Turbine Building, Unit 2, HPCS, RHRSW Water Pump Rooms
E OO	TB,8B1,8C1	Turbine Building, Unit 2, HPCS Diesel Generator and Fuel Tank Room
E I	TB,4C3	Turbine Building, Auxiliary Building Office Area
Y DD	4F2,5D2,8C3,8C4, 8C5	Unit 2, Division 1, Essential Switchgear Room, (DD defined above)
W T	4E4,4E2-2	Unit 2, Division 2, Essential Switchgear Room, Unit 2, Auxiliary Equipment Room
N E	4D2,TB	Unit 2, Cable Spreading Room, Turbine Building
E Z	TB,4F3	Turbine Building, Auxiliary Building, Rad Chemistry Offices

Table 3.8

List of Fire Areas that Required Investigating on Plant Visit (Concluded)

The following double fire areas to be visited:

Fire Area	Room(s)	Description
W AC	4E4, 4E4-1	Unit 2, Division 2, Switchgear Room and Corner Room
E Y	TB, 4F2	Defined above
W P	4E4,4D4	4D4 = Electrical Equipment Room
N P	4D2,4D4	Defined above
E W	TB,4E4	Defined above
N T	4D2,4E2-2	Defined above
E F	TB,4A,4B,5A4	F = Ventilation Equipment Floor and Cable Area
W Z	4E4,4F3	Defined above
W Y	4E4,4F2	Defined above
E P	TB,4D4	Defined above
E AA	TB, 5B13-2	AA = Balance of Plant Cable Area, North
Z S	4F3,4E2-1	4E2 = Unit 2, Auxiliary Equipment Room
S T	4E2-1,4E2-2	Defined above
P I	4D4,4C3	Defined above
AA AC	5B13-2, 4E4-1	Defined above
P F	4D4,4A,4B,5A4	Defined above
AA T	5B13-2,4E2-2	Defined above

The following triple fire areas to be visited:

N E I	(Rooms and descriptions defined above.)
E W OO	
E W I	
N P I	
E W DD	
W Y DD	
W P I	
P I F	
W AA AC	

3.5.4.2 Screening of Fire Areas Following the Plant Visit

The purpose of the plant trip was to visit the fire areas listed in Table 3.8 and determine the following:

1. The potential for a fire to spread between the various fire areas, and

2. The characteristics of the fire areas. This includes the locations of the cable trays, types of ventilation, types of vents/ducts, availability of protective wrapping, and the presence of transient combustibles.

The double fire areas in Table 3.8 have the potential of fire spread from one fire area to another fire area housing other divisions or systems of safety-related equipment. Concrete walls are present throughout the plant and act as fire barriers between adjacent rooms. Dampers to adjacent rooms are equipped with fusible links to close them in case of fire. Cable penetrations are, in general, well sealed with fire retardant materials present between individual cables. All doors are fire doors, although in at least one room the door would not close by itself because of a high ventilation rate. The evaluation of individual rooms is presented in Table 3.9. Based on the visit, none of the areas evaluated appeared likely to allow a fire to spread to an adjacent fire area.

The cable layout at LaSalle indicates that a lot of attention was devoted to fire protection of safety-related cables. The reactor building and the control room are the only two locations in the plant where both Division 1 and Division 2 safety-related cables are present. Thus, for most of the plant, fire damage to one division of safety-related cables would have to be coupled with a random failure of the second division (or failure of a fire barrier) to result in core damage. Table 3.10 summarizes pertinent information obtained for the single fire areas visited.

In the reactor building Division 1 and Division 2 cables are on opposite sides of the room roughly 120 ft. apart. This large separation distance should adequately prevent fire damage to both divisions of cable.

The control room appears to be the area most vulnerable to fire (in terms of leading to core damage). The cabinets in the control room are 8 ft. high and have open backs and open tops. Cables from one division are in a cabinet adjacent to cables of the other division with a firewall (piece of steel) between them. The small wires in the cabinets are typically 14 AWG Raychem Flamtrol XLPE 1974. The cables leading out of the tops of the cabinets are typically 1/2-in. Okonite cables. Cables from both divisions run above the cabinets at a height of about 10 ft. Thus, a fire in one cabinet could damage cables from both divisions.

Table 3.9

LaSalle Room-to-Room Fire Spread Evaluation

Room	Characteristics (Penetrations, Vents, Dampers, Doors, Etc.)
Diesel Generator Corridor (5C11-4)	Fire capable door to turbine building. Smokepath to turbine building 20 ft above door.
Diesel Generator (8B2)	3 ft x 2-1/2 ft damper with fusible link to 8C2. Day tank is isolated, no communication with turbine building.
Division 1 Switchgear (4F2)	4 ft x 4 ft damper with fusible link to turbine building about 15 ft from floor. Fire door present, but not tech spec controlled.
Rad Chemical Offices (4F3)	Airlock to reactor building; airlock to turbine building. Tech spec doors to switchgear room.
HVAC Equipment Floor (4A)	Two 3 ft x 3 ft roof hatches (closed).
Electrical Equipment Room (4D4)	Damper (3 ft x 3 ft) with fusible link to 5A4 located 8 ft off ground above door 282. 4 ft x 4 ft vent to chimney.
HVAC Equipment Floor (5A4)	Four 3 ft x 2-1/2 ft floor gratings to 5B13.
BOP Cable Area (5B13)	Four 3 ft x 2-1/2 ft ceiling gratings to 5A4. Three 3 ft x 2-1/2 ft floor grating to 5B11. 4 ft x 4 ft dampers with fusible link to 4E4, 6 ft above floor.
Division 2 Switchgear (4E4)	4 ft x 4 ft damper with fusible link to 5B13. 4 ft x 4 ft vent to chimney.
Aux Electrical Equipment (4E2-2)	2 ft x 2 ft damper (with fusible link) to adjacent auxiliary equipment room. 2 ft x 2 ft damper (with fusible link) in ductwork to adjacent equipment room.
Aux Electrical Equipment (4E2-1)	2 ft x 2 ft damper (with fusible link) to adjacent equipment room. Cables in sealed penetrations with fire retardant material between cables.

Table 3.10

LaSalle Fire Area Characteristics

Room	Fire Area	Safety-Related Divisions	Cable Tray Minimum Distance From Floor	Forced Ventilation	Vents/ Ducts	Protective Wrappings	Transient Combustibles
Division 1 Switchgear (4E4)	W	1	3 ft	High	Yes	None	No
Electrical Equipment (4D4)	P	1	15 ft	High	Yes	Some conduit	No
BOP Cable Area (5B13-2)	AA	0	6 ft	High	Floor grates, dampers	Open trays	Paper, trash
Division 2 Switchgear (4F2)	Y	1	10 ft	High	Vent to battery room	None	No
Diesel Generator (8B1)	PP	1	8 ft	Moderate	Floor grate to fuel storage room	None	No
Diesel Generator Corridor (5C11-4)	E	1	15 ft	Moderate	Open to turbine building	Thermalog on one division	No
Cable Spreading Area (5A4)	F	1	Run into floor	High	Floor grates to 5B13	None	Temporary wood scaffolding
HVAC Equipment Floor (4A)	F	0	10 ft	High	Floor grates to 4B	None	No
Aux Equipment Room (4E2-2)	T	1	10 ft	High	Vent and dampers	None	No
Control Room (4C1)	G	2	Run into floor	Moderate (in cabinet area)	Yes	None	No (in cabinet area)
Cable Spreading Area (4D2)	N	1	5 ft	High	Yes	None	No

Table 3.10

LaSalle Fire Area Characteristics (Concluded)

Room	Fire Area	Safety-Related Divisions	Cable Tray Minimum Distance From Floor	Forced Ventilation	Vents/ Ducts	Protective Wrappings	Transient Combustibles
Turbine Deck (2K, 3K, 5A1, etc.)	E	1	20 ft	High	Open to other floor	None	No
Reactor Building (3A, 2B1, 2B2, etc.)	D	2	20 ft	High	Open to other floors	None	Paper, trash anti-c fts
Rad. Chemical Lab (4F3)	Z	1	25 ft	Moderate	False ceiling at 8 ft	None	Paper chemicals

3.5.5 Evaluation of Fire Areas (Rooms) Remaining Following Plant Visit

It was determined, based on the plant visit, that all double and triple fire area combinations could be eliminated from the analysis (see Section 3.5.4.2). This left the single fire areas listed in Table 3.11 that required further investigation. The investigation process for each of the fire zones was basically the same.

The first step was to ascertain the locations of the components and cabling that, if they failed because of a fire, would fail the systems of concern in each of the fire areas. The next step was to determine the locations in each of the fire areas where enough components/cabling of the various systems were grouped together such that a fire in those specific locations would fail all the systems in the sequence of interest. Section 3.5.5.1 describes the procedure used to determine the component/cabling locations. Section 3.5.5.2 describes the plant visit done to evaluate the results of the individual area analyses for each of the fire areas.

Table 3.11

Fire Areas (Rooms) Remaining After Screening that Require Evaluation

Fire Area	Room(s)	Description
E	TB, 5C11-4	Turbine Building
D	RB	Reactor Building
Y	4F2	Unit 2, Division 1, Essential Switchgear Room
T	4E2-2	Unit 2, Auxiliary Equipment Room
DD	5D2,8C3,8C4,8C5	Unit 2, HPCS, RHR Service Water Pump Room
AC	4E4-1	Corner Portion of Unit 2, Division 2, Essential Switchgear Room
N	4D2	Unit 2, Cable Spreading Room
P	4D4	Electrical Equipment Room
AA	5B13-2	BOP Cable Area, North
F	4A,4B,5A4	Ventilation Equipment Floor and Cable Area
W	4E4	Unit 2, Division 2, Essential Switchgear Room
PP	8B2,8C2	Unit 2, Division 2, Standby Diesel Generator and Fuel Tank Room
Z	4F3	Auxiliary Building, Rad Chemistry Offices
S	4E2-1	Unit 2, Auxiliary Equipment Room

3.5.5.1 Procedure Used to Determine the System Component/Cabling Locations Within a Fire Area

The steps used to evaluate what components (e.g., cabling, cabinets, etc.) are important in each of the fire areas were the following:

a. Obtaining Detailed Analysis for a Selected Fire Area

After screening by the analyst, the remaining fire areas are analyzed with their associated random failures to obtain the component level cut sets within each area for evaluation by the fire analyst in order to identify specific fire scenarios and quantify their failure frequency within the area. This was accomplished by establishing a transformation reflecting the primary events in the area of interest and their associated random failures.

To obtain the system cut sets for a selected fire area, a transformation block is generated composed of three groups of equations having the following features: (1) primary events that are randoms associated with the fire area of interest, but are not related to fire damage itself, (2) primary events in the fire area of interest are set equal to the complement of the appended "X" form of the event name, and (3) primary events that are neither in the fire area of interest nor an associated random event are set to PHI (i.e., /OMEGA) with some exceptions. These exceptions pertain to primary events that do not have any fire area associated with them. These events must be reviewed on an individual basis to determine whether or not they should be included in the area. If one of these events is relevant to the analysis, it is treated as an event which is in the area; if not, it is set to /OMEGA. It should be noted the complement event referred to in Equation Group 2 is not being used in the mathematical sense. Rather, it is used as a device to distinguish random events in the fire area of interest from the random events associated with the sequence but not in the fire area. The random events marked as complements can then be excluded from the truncation computation for the random events by using an option of a SETS Procedure.

The transformation equations have the following form:

(Group 1): Associated Random Events

A = A.
B = B.
.
.
.

(Group 2): Events in the Fire Scenario

C = /CX.

D = /DX.

.

.

.

(Group 3): Events Not in the Fire Scenario and Not an Associated Random*

E = /OMEGA.

G = /OMEGA.

.

.

.

(*Or an event not having any fire scenario association.)

The systems involved in the sequence of interest are then resolved based on this transformation data.

b. The cut sets for the systems in the sequences were obtained for each of the fire areas listed in Table 3.11 System cut sets were also listed for the TQUX and TQUV sequences for fire areas E and D (the turbine building and reactor building, respectively).

c. For many of the systems, there were no cut sets with component failures in the fire area that did not also include a random failure. In other words, a fire (of any size) by itself in those fire areas would not fail all the systems necessary to create the sequence unless it was combined with certain random failures of components outside the fire areas. The combination of random failures was truncated at a 1E-04 probability to be consistent with the truncation used in the internal events analysis (1E-08 overall frequency). The procedure to locate the components, cabinets and/or associated cabling for these cases for each of the fire areas was done in the same manner as described in Step d below.

d. Once the component cut sets for the dominant fire areas were evaluated, the location of the cut sets for associated components/cabinets/cabling were sketched for each of the fire areas using the cable routing diagrams. These sketches were used to develop the fire propagation models as discussed in Section 3.6.

As a result of the above procedure, fire areas PP, DD, and F were screened out. In both fire areas DD and F, the PCS system failure was occurring because of a flag that was associated with the area and not because of any specific component or cable of the PCS system in the area. Since the cut sets already required random failures, any additional random failure required to fail PCS would certainly drop all the cut sets below the truncation

limit. Fire area PP had an error in the location transformation of the HVAC components to one of the DG rooms and, when corrected, required a LOSP and a random failure in AC train A. This dropped its cut sets below the truncation limit.

For the turbine building (fire area E), each system was solved and the cut sets examined to see if some nodal point existed in the area which would fail all the systems. The only nodal point was in location 5C11-4 where all systems but HPCS had cabling sufficient to fail them. This sublocation was then used in the final quantification.

For the reactor building (fire area D), a slightly different procedure was used since the area was so large. All the systems were solved in terms of their locations and the cut sets evaluated to determine which components or cabling existed in each location. A matrix was constructed showing which locations had which systems (see Table 3.12). Then, a fire was postulated as occurring on each level (starting with the upper level first and working down) and its effects where evaluated. Propagation of fires between levels was determined to be of negligible probability using the methodology described in Section 3.7.

The results for each level are described below.

1. Reactor Building Level 3D (786 ft. - 6 in.)

   As seen in Table 3.12, there are two possible system failures: the ability to vent, and CRD, since all of the remaining safety systems are available, this level is not of concern.

2. Reactor Building Level 3E (761 ft. - 0 in.)

   All major safety systems appear to be potentially vulnerable to a fire in 3E. The exception is condensate (CDS), which has no components or cabling in 3E. In addition, a fire in 3E could possibly fail train B cabling of ADS; however, the cabling to train A is located in 3F-1 and 3G-1. A fire would have to propagate from 3E to 3F-1 to fail ADS. The LPCI cabling in 3E appears to be separated into two major areas with train B on one side and trains A and C on the other. Therefore, unless a fire initiated in 3E can propagate to 3F-1 to fail ADS, CDS can be used to deliver low pressure water. Also, one of the LPCI trains will be available unless both sides of level E cabling fails.

3. Reactor Building Level 3F (740 ft. - 0 in.)

   A fire on level 3F would not affect HPCS. A fire might fail cabling for MFW on 3F-1; however, this would only fail MFW valve

Table 3.12

Matrix of System Versus Rooms in Reactor Building

ROOM* / SYSTEM	3D	3E	3F-1	3F-2	3G-1	3H1	3H2	3H3	3H4	3H5	3I1	3I2	3I3	3I4	3I5
(1) ADS		C	C	C	C										
(2) MFW		X C	X C		C										
(3) HPCS		X C				X	X				X C	X C			
(4) RCIC		X C	X C		X C	X C			X C					X C	
(5) CDS			X C		C										
(6) VENT	X C	C	X C	X C	C										
(7) LPCI		X C	X C	X C	X C			X C		X C			X C		X C
(8) LCS		C	X C		X C	X C			C	X C	X C			X C	
(9) CRD	X C	X C	X C	C	C	C					C	X C			

*In each room X - Component in Room
C - Cabling in Room

Table 3.12 Notes

(1) ADS - If protect train A cabling in 3F-1 and 3G-1 <u>or</u> train B in 3E and 3F-2 then okay.

(2) MFW - Rx Building 3E cut sets.

```
            3E (P004)
1.  C34N004A-OCO-LF
       3E (P027)          3E (P005)
2.  C34N004B-OCO-LF * C34N00C-OCO-LF
       3F-1, 3G-2            3G-1
3.  MFWF65AA-VOC-CC * XMFWP65-BA-VOC-CC
```

(3) HPCS Singles.
(3H1, 3H2, 3E, 3I1, 3I2, 5D2, 4C1)

(4) RCIC Singles.
(3E, 3F-1, 3F-2, 3G-1, 3H1, 3H4, 3I4)

(5) CDS has <u>one</u> cut set.

```
        3F-1, 3G-1          3H1
1.  MFWF65AA-VOC-CC * MFWF65BA-VOC-CC
```

(6) VENT has singles in 3D, 3E, 3F-1, 3H2, and 3G-1 (both components and cabling except for 3E and 3G-1 [cabling only]).

(7) LPCI - cabling for train B appears to be on one side, A and C on the other.

(8) LPCS has singles.
(3E, 3F-1, 3F-2, 3G-1, 3H1, 3H5, 3I1, 3I4)

(9) CRD has singles.
(3D, 3E, 3F-1, 3F-2, 3G-1, 3I2)

65A cabling and MFW valve 65B cabling located on 3G-1 would still remain undamaged. A fire in 3F-1 could possibly fail train A of ADS; however, it would have to propagate either to 3F-2 on the same level or to 3E (the level above) to fail train B. Also a fire in 3F-1 cabling would only fail trains A and C, and it would have to propagate to 3F-2 to fail and LPCI train B and vice versa.

4. 3G-1 Level in Reactor Building (710 ft. - 0 in.)

A fire in 3G-1 could fail train A cabling ADS. The fire would have to propagate to either 3E or 3F-2 to fail ADS train B cabling. MFW and CDS both have the same cut set; the cabling of MFW valve 65A and MFW valve 65B. The cabling appears to be in series in one corner of 3G-1. HPCS has no components or cabling in 3G-1. Fire would have to propagate either down to 3H1 (one level) or up to level 3E (two levels) to fail HPCS. VENT has a single in the cabling in 3G-1, cable 2AP315, resulting in failure of AC bus 235Y-1. The cabling is located in the same area as the MFW and CDS cabling.

5. 3H1

ADS, MFW, CDS, VENT and LPCI do not have components and/or cabling in 3H1. HPCS, RCIC, and LPCS do have singles in 3H1. A fire would have to progress two levels upward (3F and 3G-1) to fail ADS. If the fire progresses upward one level, it would fail MFW, CDS, and LPCI (LPCI, however, has cabling separated on each level by train). VENT requires the fire propagate two levels upward to fail (i.e., up to 3F-1 or 3F-2).

6. 3H2 Down to 3I Level

There does not appear to be any concern, only one or two systems or trains of systems appear in each location.

As can be seen by the above description, no level of the reactor building in itself is likely to result in a fire of sufficient magnitude to fail a sufficient number of systems to create a fire sequence 1 or 2 (loss of all primary cooling). It appears that at least two alternate injection systems will be available and the random failures would drop the cut set below the truncation limit. The reactor building was therefore eliminated from further consideration.

3.5.5.2 Confirmatory Plant Visit

For those remaining fire areas, all fire-related failure scenarios were identified. A scenario can be thought of as a combination of one or more fire-related equipment failures within a fire area with or without

additional non-fire-related (random) failures outside of the fire area. These failure combinations must minimally lead to core damage. Each fire area can have one or more scenarios depending on the equipment combinations which must fail due to the fire in that particular area. A third plant visit was then conducted to determine which of these scenarios were valid based upon cable or equipment locations within a particular fire area. For instance, if a given scenario required the fire-related failure of cabling for components A and B and it could be shown that these cables were always separated by greater than 40 ft. or one of the component's cabling was in a 3-hr. rated fire wrap, then these types of scenarios were eliminated from further consideration. Past experience with fire code calculations, which is discussed in the following section, and fire testing, provided much of the basis for assessing the validity of the scenarios.

3.6 Fire Propagation Modeling

The COMPBRN fire growth code[2] was used to calculate fire propagation and equipment damage. COMPBRN was developed specifically for use in nuclear power plant fire PRAs. The code calculates the time to damage critical equipment given that a fire has started. This failure time is then used in conjunction with plant specific information on fire suppression to obtain the probability that a given fire will cause equipment failure which leads to core damage before the fire can be suppressed. The latest version of the code, COMPBRN III,[3] with some additional modifications[4] was used for the calculations.

COMPBRN follows a quasistatic approach to simulate the process of fire during the preflashover period in an enclosure. COMPBRN uses a zone model breaking the fire environment into three zones: flame/plume, hot gas layer, and ambient (see Figure 3.4). Simple fire and heat transfer models and correlations are employed to predict the thermal environment as a function of time. The thermal response of various targets in the fire scenario is modeled to predict the amount of time required for a fire to damage or ignite critical equipment. The critical equipment is generally taken to be a cable tray carrying cables necessary for safe shutdown of the plant, although other critical components such as pumps may be modeled.

The original version of COMPBRN, now referred to as COMPBRN I, has been used to calculate damage times in the majority of fire PRAs to date. However, the code calculations are thought to be highly conservative because of the neglect of heat losses from the targets. A critical assessment of the code containing this and other problems has been performed.[13] In response to these problems with COMPBRN I, two later versions of the code were developed: COMPBRN II and COMPBRN III.[3] Neither of the later versions of the code has been extensively validated or compared to data, but presumably represent various degrees of improvement.

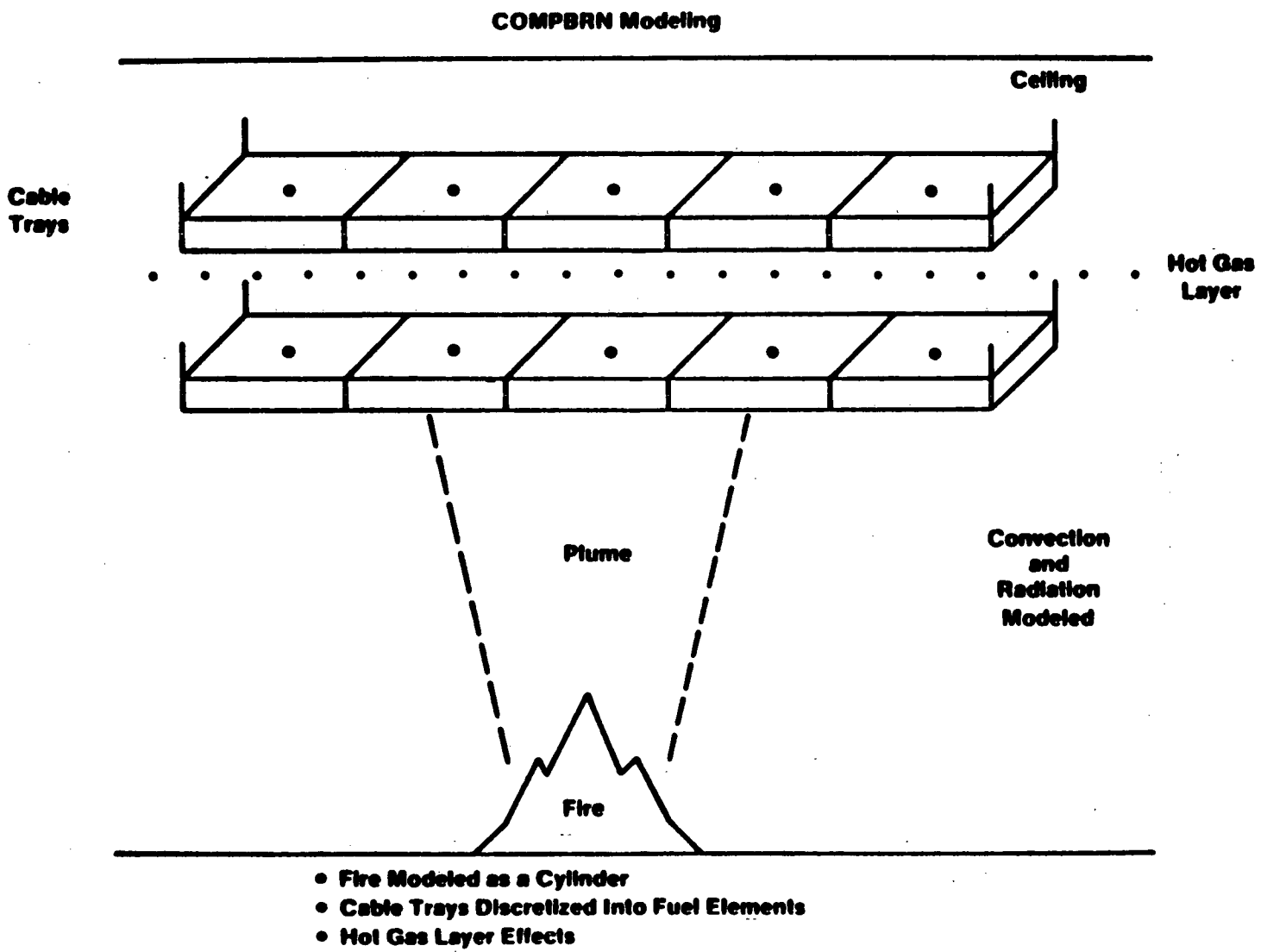

Figure 3.4 COMPBRN Zone Model

As a part of a recent study[4] on nuclear power plant fire risk assessment, the latest version of the code (COMPBRN III) was selected to requantify fire damage times from several fire PRAs. Initial attempts to use COMPBRN III in the requantification resulted in the observation of problems with and non-physical behavior of the code. Many of the code calculations could not be explained on a physical basis. As a result of the observed non-physical behavior of the code, an effort was undertaken to identify problem areas and to suggest and implement modifications to the code which make the code predictions more reasonable on a physical basis. It was this modified version of the COMPBRN code which was used to provide the fire propagation analysis for this report. References 4 and 14 provide detailed discussions of the problems noted and recommended modifications for the COMPBRN III code. The following is a brief listing of the major problems which were identified and addressed in the modified version of the code:

a. An error, and nonconservative assumption, exists in the forced ventilation hot gas layer model, predicting low hot gas layer temperatures.

b. Radiative heat transfer directly above the flame is not modeled, yielding cooler temperatures directly above the flame than off to the side of the flame.

c. Two errors in the calculation of view factors overpredict the heat radiated to targets to the side as compared to objects directly above the flame.

d. Only convective heat transfer, and not the dominant radiative heat transfer for objects directly engulfed in the flame, is modeled. Time to ignition is highly non-physical.

e. The conduction algorithm is unstable for high heat fluxes, resulting in premature termination of the code, especially for cases involving objects in the flame or thermal response of barriers.

f. The mass burning rate of burning objects is underpredicted due to lack of thermal feedback modeling.

Both small and large fires were postulated in the calculations for LaSalle. A small fire was assumed to be 2 ft. (0.61 m) in diameter and consist of 1 gal (3.8 l) of oil. A large fire was assumed to be 3 ft. (0.91 m) in diameter and consist of 10 gal (38 l) of oil. Analysis of a data base of transient combustible fuel sources found at nuclear power plants[15] indicates that oil sources less than or equal to 1 gal (3.8 l) were found approximately 70 percent of the time. Oil sources larger than this were found approximately 30 percent of the time. A similar partitioning between small and large quantities in terms of heat content (BTU or KJ) can be made for other credible transient combustible sources

such as solvents or trash paper. Again, analysis indicates that a 70/30 partitioning between small and large fuel sources is appropriate (within ±10 percent). It can also be shown that 10 gal (38 l) of oil bounds any large solvent or trash paper combustible source in terms of heat content and is, therefore, an appropriate upper bound on transient combustible fuel source size.

A walkdown of the LaSalle plant was performed to obtain vital information for the COMPBRN calculations. This information included the specific location of critical equipment and cable trays within a location, separation between redundant trains, types of cable present, and any shielding or fire barriers that may be present. Several "pinch points" were identified where critical cables from redundant trains passed from one room to another or were routed in the same area in close proximity. Some of the cabling was enclosed in conduit while the majority of cables of interest are routed in exposed cable trays. Cable in conduit was assumed incapable of ignition; however, damage was assumed to occur when the surface temperature reached the temperature corresponding to cable failure. Because of its low melting point, the aluminum conduit was neglected for conservatism.

Cable insulation and damage thresholds are currently not well known.[16] Some information on flamability parameters was supplied by CECo and some cable to perform firetesting; however, no monies were available to perform the tests. While we believe the LaSalle cables are better than older cables, COMPBRN is not particularly sensitive to variations in this parameter. For this study, a cable insulation ignition temperature of 773 K (932#F) was assumed along with a damage temperature of 623 K (662#F). For the large fire simulations, these thresholds are not as critical to the fire damage time calculations because of the intensity of the flames. The uncertainty in the flamability parameters along with the uncertainty in other parameters was considered by the fire experts in interpreting the COMPBRN results and in constructing the probability distributions on time to damage.

A list of input parameters for the COMPBRN calculations is shown in Table 3.13. These parameters were selected based on past fire analyses at commercial nuclear facilities to represent typical qualified cable insulation. It was assumed, based on cable tray inspection in some critical fire areas that the cabling in all the areas of interest at LaSalle included typical brands of nuclear qualified cable insulation materials, such as Rockbestos Firewall III, Brand Rex, Samuel Moore, Flametrol, or Okonite. Because of the good flame resistance properties of these cables, no self-ignited (electrically initiated) cable tray fires were postulated. Calculations were also made assuming lower temperature damage thresholds. These calculations predicted slightly shorter times to damage, however, since very little credit was given for manual suppression the overall effect on core damage frequency would be negligible.

The COMPBRN results are shown in Table 3.14 for the dominant critical areas noted in Section 3.5.5. Summary discussions of each fire area are provided in Subsections 3.6.1 through 3.6.9. A number of scenarios were considered for many of these areas. In most cases, a "zone of influence" was determined for the equipment and fire sizes modeled. In other words, the fire location was varied in the COMPBRN models to determine the maximum distance the fire could be away from the critical equipment and still cause damage. The times to damage increase exponentially as the fire distance increases. The numbers given in the table represent the

Table 3.13

Modified COMPBRN III Input Parameters

Cable Insulation Parameters	
Density	1715 kg/m^3
Specific Heat	1045 J/kg-K
Thermal Conductivity	0.092 W/m-K
Heat of Combustion	1.85-2.31E-7 J/kg
Combustion Efficiency	0.6-0.8
Critical Temperature	
Piloted Ignition	773 K
Spontaneous Ignition	773 K
Damage	623 K
Surface Controlled Burning Rate	0.0001-0.0075 kg/m^2-S
Burning Rate Radiation Augmentation	1.86E-7 kg/J-m^2
Radiative Fraction	0.3-0.5
Smoke Attenuation Factor	1.4
Reflectivity	0.1-0.3
Oil Parameters	
Density	900 kg/m^3
Specific Heat	2100 J/kg-K
Heat of Combustion	4.67E7 J/kg
Combustion Efficiency	0.9
Surface Controlled Burning Rate	0.06
Radiative Fraction	0.3-0.5
Mass of Oil	3.4-34.0 kg

combination of greatest distance and longest times to damage. Using these results, the floor area in which a fire would have to occur to damage critical cables can be estimated. An area ratio can then be calculated by dividing this area by the total floor area of the room,

Table 3.14

Summary of COMPBRN Results

		Large Fires		Small Fires	
Fire Area	Location	Time	Area Ratio	Time	Area Ratio
E	5C11-4	-	-	-	-
N	4D2, Cable Spreading Room	3-5 min	0.154	-	-
P	4D4, Elec. Equip. Room	7-8 min	0.050	3-4 min	0.016
T	4E2-2	9-10 min	0.84	-	-
W1 (Scenario 1)	4E4, Swgr. Cabinets	-	-	4-5 min	1.0
W2 (Scenario 2)	4E4, Room	4-5 min	0.173	-	-
Y1 (Scenario 1)	4F2, Swgr. Cabinets	-	-	4-5 min	1.0
Y2 (Scenario 2)	4F2, Room	4-5 min	0.125	-	-
Z	4F3	5-6 min	0.005	-	-
AA	5B13-2	6-8 min	0.08	-	-
AC	4E4-1	1 min	1.0	2-3 min	1.0
S(AA)	4E2-1, Aux. Equip. Room	4-5 min	0.11	-	-
S(W)	4E2-1, Aux. Equip. Room	4-5 min	0.11	-	-

fire area, or building (as appropriate). This reduction factor can then be multiplied by the initiating frequency to estimate the frequency of fires which occur in a critical portion of a given room.

It should be noted that a small fire, except for zone of influence cases, does not yield damage in many of the areas. Prior experience with COMPBRN shows that a small fire must be very close to its target to yield damage. Large fires, however, can and do yield damage in most of the areas. In large open rooms such as the turbine building corridor, the larger fire must still be within about 3 ft. horizontally of the target cable trays (assuming typical tray heights). The major exception is in small closed rooms (like Fire Area AA) in which a hot gas layer rapidly develops. In such cases, the hot gas layer effects become quite significant. Thus for some of the COMPBRN runs, room parameters were used in order to simulate a model of the hot gas layer. For these cases, damage occurs sooner due to the increased thermal input from the hot gases.

It has been found in past experience with COMPBRN and in some of the simulations for LaSalle that the COMPBRN results can be quite sensitive to fires located adjacent to walls which are in close proximity to the target cable trays. Using the typical model of the wall as one section results in unrealistic radiative heat fluxes from the wall to the cable trays of interest. For these cases, the wall was divided into several sections to more realistically calculate the wall thermal response.

The following subsections discuss the approach and results for the scenarios analyzed in each of the critical fire areas.

3.6.1 Fire Area E, Location 5C11-4

3.6.1.1 Results

Only a very large fire will cause damage to the cables of interest in this corridor.

3.6.1.2 Discussion

The cable trays in this area are up very high near the ceiling (approximately 20 ft. up) and appeared during the site inspection to be coated with Flamastic-like material. The corridor is closed at both ends with no real combustible loading, though it appeared to be a heavily used access area to other plant rooms adjacent to it. The hot gas layer was modeled though the ceiling height precluded much of an effect. No credit was taken for the Flamastic other than to set the ignition temperature higher to take account of the ability of these coatings to prevent or hinder flame propagation. The presence of a local sprinkler system was noted during the inspection.

3.6.2 Fire Area N, Location 4D2, Cable Spreading Room

3.6.2.1 Results

A large fire will cause damage to the target cables in 3 to 5 min over a horizontal distance of ±0.9 m. This results in an area ratio for the cable tray lengths of concern of 0.154 for the cable spreading room.

Small fires will not result in damage to the target cables.

3.6.2.2 Discussion

Though of no major significance, the hot gas layer was modeled in this room. The cable trays which contain cables for the systems of interest are located in the northeast corner of the room. The trays are enclosed on the bottom and sides, effectively protecting the cables from direct flame impingement. A number of modeling options were explored to attempt to take credit for the enclosed tray and higher temperatures required to cause damage and ignition. Also, vertical bundles of cables running up from the trays to the control room above were modeled to determine if flame propagation to the adjacent horizontal trays would occur. Tray height was 9 ft. 6 in., with intervening trays below. However, the lower trays were ignored as potential fuel sources because of the tray protection.

3.6.3 Fire Area P, Location 4D4, Electrical Equipment Room

3.6.3.1 Results

Large fires will cause damage to the cables of interest in about 7 to 8 min over an area ratio for this room of 0.050. Small fires will yield damage in 3 to 4 min with an area ratio of 0.016.

3.6.3.2 Discussion

The cables in the south end of this area are in two vertical cable runs, both enclosed and exposed. Coming up through the floor in the enclosed section of the cable chase, the cables become exposed, exit the first section of vertical "tray," and are then routed up through another vertical enclosed cable chase which exits through the ceiling some 18 ft. up. A perfect chimney! The hot gas layer was simulated over an equivalent square room of equal ceiling area, and both vertical sections of cables were modeled. Two sets of these cable chases, about 12 ft. apart center-to-center, were modeled. Damage to either of these will fail the systems of interest.

3.6.4 Fire Area T, Location 4E2-2, Corner of Unit 2 Auxiliary Equipment Room

3.6.4.1 Results

A large fire can cause damage to these cables in 9 to 10 min over an area ratio for this small room of 0.84. The small fire simulation did not result in damage.

3.6.4.2 Discussion

This small fire area is in the northwest corner of room 4E2. The cable tray of interest is up high (12 ft. 6 in.), enclosed, and located in the southwest corner of the room. The hot gas layer was modeled and credit was taken for the cable tray protection from the standpoint of preventing ignition from direct flame impingement, though this is not likely to occur at the tray height in this model.

3.6.5 Fire Area W, Location 4E4, Unit 2, Division 2, Essential Switchgear Room and Fire Area Y, Location 4F2, Unit 2, Division 1 Essential Switchgear Room

3.6.5.1 Results

A small fire simulation in the switchgear cabinet itself results in damage to the tray above in 4 to 5 min. For fires on the floor, a large fire will cause damage to the target cables above the cabinets in 4 to 5 min from ± 0.9 m, or an area ratio for fire area W of 0.173 and for fire area Y of 0.125.

A small fire on the floor will not damage these cables.

3.6.5.2 Discussion

The cabinets in both of these areas are 7 ft. 6 in. high; the trays are 2 ft. above that. All trays are 2 ft. wide and open above the cabinets to direct flames. Two models were developed for these areas. The first involves a "small" fire within the cabinet to simulate an actual switchgear fire. The target cables are above and are vulnerable due to openings through the tops of the cabinets for flame propagation. A small vertical tray rising up from the cabinets was modeled with high reflectivity in an attempt to delay the onset of ignition as this will likely be the realistic outcome. The second model involves the typical large and small fires on the floor and a determination of the "zone of influence" about the target cable tray. The fire was assumed to only cause damage from one side of the tray in the areas where it is routed above the cabinets. An area ratio of 1.0 applies to the former model for switchgear fires; actual area ratios were determined for the latter based on the zone of influence and the actual room areas.

3.6.6 Fire Area Z, Location 4F3, Auxiliary Building Rad Chem Offices

3.6.6.1 Results

Only the large fire in the corridor in the far northwest corner of this fire area is capable of causing damage to the target cables above the false ceiling. Damage will occur in 5 to 6 min for a small area (2.2 m^2) or an area ratio for the entire fire zone of 0.005. A small fire is not capable of damaging the cables of interest.

3.6.6.2 Discussion

This area is subdivided into many small offices and other work areas with a false ceiling above at a height of 2.6 m. The area above the ceiling is open throughout the fire area. The cable trays enter from fire area Y, are high up and difficult to trace above the false ceiling, and are metal enclosed. Tray heights are based on the heights of the cable trays as they penetrate from fire area Y. For the purposes of this analysis, the false ceiling was conservatively ignored as these structures usually fail quite early in actual fire tests. Fires were set up in both the small corridor adjacent to fire area Y, and the small computer room to the immediate south. Because of the size of the fire area and the open nature of the area above the false ceiling, the hot gas layer was not modeled.

3.6.7 Fire Area AA, Location 5B13-2, BOP Cable Area North

3.6.7.1 Results

The large fire simulation will cause damage to the target cables in 6 to 8 min from ± 0.9 m or an area ratio for the entire fire area of 0.08. A small fire will not damage these cables.

3.6.7.2 Discussion

The single tray run in this area is 9 ft. 6 in. up and about 55 ft. in length, with very little other equipment or intervening structures. The tray is fully enclosed on the bottom and sides. The reflectivity is set high to simulate this cable protection.

3.6.8 Fire Area AC, Location 4E4-1, Corner of Unit 2, Division 2 Essential Switchgear Room

3.6.8.1 Results

A large fire will damage either "train" of these cables from anywhere in this small room in 1 min (area ratio of 1.0). The small fire causes damage in 2 to 3 min, again from anywhere in the room.

3.6.8.2 Discussion

Two sets of enclosed cables rise vertically through the floor and angle off and exit the room above. Reflectivity was set high and the hot gas layer was simulated. As this is a very small room, the gas layer dominates the results. This room is normally closed off with very little in the way of combustibles. The probability of a fire in this area is subject to conjecture.

3.6.9 Fire Area S, Location 4E2-1, Auxiliary Equipment Room

3.6.9.1 Results

A large fire will cause damage to either set of target cables in 4 to 5 min with an area ratio of 0.11 for either scenario.

3.6.9.2 Discussion

Cable runs come in this area from fire areas W and AA. Therefore, two fire scenarios are possible.

3.7 Barrier Failure Analysis

In the unscreened cut sets where a potential for barrier failure had been identified, barrier failure probability was estimated using barrier failure rates developed as part of this program.

Barriers were grouped into three types: (1) fire doors, security doors, watertight doors, and fire curtains, (2) fire dampers and ventilation dampers, and (3) penetration seals and fire walls. The data base contains 628 records from start of construction on any given plant to the end of June 1985. The number of barriers of each type at a plant is required to estimate the rate at which a specific component fails. The number is not known precisely for each plant, but a nominal figure that has been estimated for each barrier type is given in Table 3.15.

Table 3.15

Approximate Number of Barriers at a Plant

Type	Nominal
1	150
2	200
3	3000

The statistical uncertainty of each estimate, reflecting sampling variation and plant-to-plant variation, is represented by 90 percent confidence bounds. These estimates and confidence bounds are given in Table 3.16 where units of both estimates and bounds are failures/year.

Table 3.16

Estimates of Single Barrier Failure Rate

Barrier Type	Barrier/ Unit	Estimate	5 Percent Confidence Bound	95 Percent Confidence Bound
1	150	7.4E-3	0.0	2.4E-1
2	200	2.7E-3	0.0	2.2E-1
3	3000	1.2E-3	0.0	3.7E-2

During the confirmatory plant visit, barriers required to fail in the postulated fire scenarios were inspected. No plant-specific vulnerabilities were noted as a result of this inspection which would have resulted in modification of generic barrier failure rates. After multiplying barrier failure rates by the number of penetrations at each appropriate fire zone adjacency and utilizing the probabilities developed in screening Step 10 (see Section 3.5.4.1), all remaining barrier failure scenarios did not survive the 1E-08 per year frequency screening criteria.

3.8 Recovery Analysis

For those remaining cut sets which survived the screening process and where the COMPBRN code predicted fire damage would occur, credit was given for extinguishment of the fire before the COMPBRN predicted time to fire damage. A detailed discussion of the quantification procedure for the probability of extinguishment before fire damage occurs is contained in Appendix A. Also, credit was given in areas where automatic suppression systems were located for extinguishment of the fire before the fire brigade responded.

3.9 Uncertainty Analysis

Propagating distributions on fire frequency, fire suppression probability, fire code calculations, random failure probability, barrier

failure probability, and operator recovery actions through scenario equations generated uncertainty distributions on fire-induced core damage frequencies.

The uncertainty in these parameters was propagated through the accident sequence models using two computer codes. A Latin Hypercube Sampling (LHS) algorithm[17] was used to generate the samples for all of the parameter values. The Top Event Matrix Analysis Code (TEMAC)[5] was used to quantify the uncertainty of the accident sequence equation using the parameter value samples generated by the LHS code.

LHS is a constrained Monte Carlo technique which forces all parts of the distribution to be sampled. The LHS code is also flexible in that it can sample a variety of random variable distributions. Furthermore, parameter distributions for similar events can be correlated. For example, if two similar components (e.g., MOV XX-FTO and MOV YY-FTO) are modeled from the same probability distribution, then the sampling of these two distributions is perfectly correlated, meaning the same value is used for both events in a given sample member. For basic events which are modeled with very similar but slightly different distributions (e.g., MOV XX fails to remain closed for 100 hr. and MOV YY fails to remain closed for 200 hr.), the LHS code permits an induced correlation between the samples. However, LHS does not allow the correlation coefficient for this case to be equal to 1.0. LHS does permit sampling with a coefficient of 0.99 in these cases.

TEMAC uses the LHS parameter samples and the accident sequence equations (cut sets) as input to quantify the core damage estimates. TEMAC generates a sample of the accident sequence frequency, a point estimate of the frequency, and various importance measures and ranking for the base events. The TEMAC output for all unscreened fire scenarios is given in Appendix F.

Uncertainty concerning fire-initiating event frequency was developed when the generic fire frequencies were updated using LaSalle specific data. This process, which was briefly discussed in Section 3.3, is covered in more detail in Reference 10.

Uncertainty concerning fire non-suppression probabilities ($Q(s_G)$) was addressed by modification of COMPBRN predicted time to damage. The COMPBRN predicted time to damage and its associated non-suppression curve probability were taken to be a best estimate of a maximum entropy-distributed variable. Based on expert judgement, fifteen minutes were added and subtracted from the COMPBRN predicted time to allow for uncertainty in its result and the uncertainty in the probability of non-suppression distribution. These probabilities were taken as a minimum and maximum of the maximum entropy distribution, respectively.

Uncertainty associated with the fire size estimate factor (f_s) was developed utilizing information associated with an I&E inspector report[15] on a survey of different types of combustibles and their amounts found in

nuclear power plants. Two fire sizes, a large and a small fire, were modeled as described in Section 3.6. These fire sizes (BTU content) were compared to the distributions on possible fire sizes developed for the different combustibles from the I&E data. The best estimate for the percentage of fires that were either large or small was taken from an average of the different types of combustibles for an equivalent BTU level fire modeled by COMPBRN. This probability was assumed to be the best estimate value of a maximum entropy distribution. Maximum and minimum probabilities for this distribution were assumed to be based on one individual type of combustible with either the maximum and minimum percentage corresponding to applicable fire size (BTU rating).

Random failure events and operator recovery actions were treated identically as in the internal events analysis. Uncertainties and types of distributions were not modified for the fire analysis.

All other factors and their associated uncertainties are not common to all fire sequences and will be addressed individually in the appropriate subsections of Section 3.10.

3.10 Description of Unscreened Fire-Induced Core Damage Scenarios and Their Associated Fire Areas

3.10.1 Introduction

This section will describe the fire scenarios and their associated fire areas which are listed in Table 3.1. All other fire areas and all adjacent fire area combinations were assessed to be below 1E-08 per year after either operator recovery of non-fire-related failures or barrier failure probabilities were applied, and therefore, did not survive initial screening.

Table 3.17 lists all random (unrelated to fire damage) failures and their definitions that appear in the following subsections.

3.10.2 Control Room

The main control room is located on the 768-ft. elevation of the auxiliary building. This area provides for central control of most of the critical plant functions. If operators are forced to abandon the control room due to intense smoke generated in a cabinet fire, a remote shutdown capability exists which is electrically independent of the control room and credit is given for it as a recovery procedure.

Because the level-of-detail of the LaSalle analysis allowed the mapping of individual relays, switches, cables, etc. to specific cabinets and cable trays within the control room, a detailed study of the effects of fires started in individual cabinets and other locations within the (text continued on page 3-100)

Table 3.17

Random (Internal Event) Basic Event Descriptions

Random Failure	Description
1EB16211-BCO	Failure of circuit breaker 16211, fails CSCS pump 0DG01P power, fails LPCS, RCIC, LPCI train A, and DG"0".
1EB16212-BCO	Failure of circuit breaker 16212, fails CSCS pump 2DG01P power, fails LPCI train B and C, and DG"2A".
1EB1Y22X-BCO	RHR pump A control power circuit breaker 1EB1Y22X fails open, fails RHR train A.
1EB211YX-BCO-LF	DC circuit breaker to DC bus 211Y fails open, fails train A DC power to ECCS systems, fails RHR train A.
1EB212YX-BCO-LF	DC circuit breaker to DC bus 212Y fails open, fails train B DC power to ECCS systems, fails RHR train B.
1EB235A-BCO-LF	AC circuit breaker to 235X and 235Y fails open, fails train A of AC power and RHR train A.
1EB235XA-BCO-LF	AC circuit breaker to 235X fails open, fails train A of AC power and RHR train A.
1EB235YA-BCO-LF	AC circuit breaker to 235Y fails open, fails train A of AC power and RHR train A.
1EB236B-BCO-LF	AC circuit breaker to 236X and 236Y fails open, fails train B of AC power and RHR train B.
1EB2Y22X-BCO	RHR pump B control power circuit breaker 1EB2Y22X fails open, fails RHR train B.
1EB35Y1X-BCO-LF	AC circuit breaker to 235Y-1 fails open, fails train A of AC power and RHR train A.
1EB35Y2X-BCO-LF	AC circuit breaker to 235Y-2 fails open, fails train A of AC power and RHR train A.
1EB36XB-BCO-LF	AC circuit breaker to 236X fails open, fails train B of AC power and RHR train B.

Table 3.17 (Continued)

Random (Internal Event) Basic Event Descriptions

Random Failure	Description
1EB36Y1X-BCO-LF	AC circuit breaker to 235Y-1 fails open, fails train B of AC power and RHR train B.
1EB36Y2X-BCO-LF	AC circuit breaker to 235Y-2 fails open, fails train B of AC power and RHR train B.
1EB36YB-BCO-LF	AC circuit breaker to 236Y fails open, fails train B of AC power and RHR train B.
1EB43C-BCO-LF	AC circuit breaker to 243-1 fails open, fails train C of AC power and HPCS.
1EDC2DEP-FROP-4	Failure to restore AC power to batteries before depletion given DC charging has failed.
2DG01PK18CA-LFOO	Local fault of contact pair results in CSCS pump 2DG01P failing to start, fails LPCI train B and C, and DG"2A".
2DG01PSC-OOO-LFO	DG RPM switch failure results in CSCS pump 2DG01P failing to start, fails LPCI train B and C, and DG"2A".
2DG1PK18-ROO-LFO	Relay coil failure results in CSCS pump 2DG01P failing to start, fails LPCI train B and C, and DG"2A".
CODG002-CCC-LF	Check valve ODG002 in CSCS fails cooling to train A DG, fails LPCS, RCIC, LPCI train A, and DG"0".
CODG01F-PLG-LF	Strainer ODG01F plugging in CSCS fails cooling to train A DG, fails LPCS, RCIC, LPCI train A, and DG"0".
CODG01F-S-UUM	Strainer ODG01F maintenance in CSCS fails cooling to train A DG, fails LPCS, RCIC, LPCI train A, and DG"0".
CODG01P-P-UUM	Pump ODG01P maintenance in CSCS fails cooling to train A DG, fails LPCS, RCIC, LPCI train A, and DG"0".

Table 3.17 (Continued)

Random (Internal Event) Basic Event Descriptions

Random Failure	Description
C0DG01P-PMS-CC	Pump 0DG01P control circuit fault in CSCS fails cooling to train A DG, fails LPCS, RCIC, LPCI train A, and DG"0".
C0DG01P-PMS-LF	Pump 0DG01P local fault in CSCS fails cooling to train A DG, fails LPCS, RCIC, LPCI train A, and DG"0".
C2DG01F-PLG-LF	Strainer 2DG01F plugging in CSCS fails cooling to train B DG, fails LPCI train B and C, and DG"2A".
C2DG01F-S-UUM	Strainer 2DG01F maintenance in CSCS fails cooling to train B DG, fails LPCI train B and C, and DG"2A".
C2DG01P-P-UUM	Pump 2DG01P maintenance in CSCS fails cooling to train B DG, fails LPCI train B and C, and DG"2A".
C2DG01P-PMS-CC	Pump 2DG01P control circuit fault in CSCS fails cooling to train B DG, fails LPCI train B and C, and DG"2A".
C2DG01P-PMS-LF	Pump 2DG01P local fault in CSCS fails cooling to train B DG, fails LPCI train B and C, and DG"2A".
C2DGF002-CCC-LF	Check valve 2DG002 in CSCS fails cooling to train B DG, fails LPCI train B and C, and DG"2A".
CCB0DG1P-BCO-LF	Power circuit breaker for CSCS pump 0DG01P from 235X fails open, fails LPCS, RCIC, LPCI train A, and DG"0".
CCB2DG1P-BCO-LF	Power circuit breaker for CSCS pump 2DG01P from 236X fails open, fails LPCI train B and C, and DG"2A".
CCBC002-BCO-LF	CSCS pump 2E22-C002 power breaker failure, fails HPCS.
CCBF068A-BCO-LF	CSCS MOV 2E12-F068A RHR train A outlet valve power breaker fails, fails RHR HTX train A.

Table 3.17 (Continued)

Random (Internal Event) Basic Event Descriptions

Random Failure	Description
CONT-LEAK	Containment overpressure without venting results in containment leakage (the complement is rupture).
CSCB068X-BCO-LF	CSCS MOV 2E12-F068B RHR train B outlet valve power breaker fails, fails RHR HTX train B.
CSCC002-P-UUM	CSCS pump 2E22-C002 maintenance, fails HPCS.
CSCC002-PMS-CC	CSCS pump 2E22-C002 control circuit failure, fails HPCS.
CSCC002-PMS-LF	CSCS pump 2E22-C002 local fault, fails HPCS.
CSCD300-PLG-LF	CSCS strainer 2E22-D300 faults, fails HPCS.
CSCD300A-PLG-LF	CSCS strainer 2E12-D300A faults, fails LPCS, RCIC, LPCI train A, and DG"0".
CSCD300A-S-UUM	CSCS strainer 2E12-D300A maintenance, fails LPCS, RCIC, LPCI train A, and DG"0".
CSCD300B-PLG-LF	CSCS strainer 2E12-D300B faults, fails LPCI train B and C, and DG"2A".
CSCD300B-S-UUM	CSCS strainer 2E12-D300B maintenance, fails LPCI train B and C, and DG"2A".
CSCF008A-V-UUM	CSCS MOV 2E12-F068A RHR train A HTX outlet valve maintenance (typo) fails RHR train A HTX.
CSCF068A-VCC-LF	CSCS MOV 2E12-F068A RHR train A HTX outlet valve fails closed, fails RHR train A HTX.
CSCF068B-V-UUM	CSCS MOV 2E12-F068B RHR train B HTX outlet valve maintenance fails RHR train B HTX.
CSCF068B-VCC-LF	CSCS MOV 2E12-F068B RHR train B HTX outlet valve fails closed, fails RHR train B HTX.
DG2A-GEN-LF-FTR	Diesel generator "0" fails to run for 6 hrs, fails train A safety systems if train A normal power failed.

Table 3.17 (Continued)

Random (Internal Event) Basic Event Descriptions

Random Failure	Description
DG2A-GEN-LF-FTS	Diesel generator "0" fails to start, fails train A safety systems if train A normal power failed.
EE-C2DG01F-PLG	CSCS strainer 2DG01F plugs after backflush failure, fails LPCI train B and C, and DG"2A".
EE-CSCD300-PLG	CSCS strainer 2E22-D300 plugs after backflush failure, fails HPCS.
EE-CSCD300A-PLG	CSCS strainer 2E12-D300A plugs after backflush failure, fails RHR train A HTX and pump A seal cooler.
EE-CSCD300B-PLG	CSCS strainer 2E12-D300B plugs after backflush failure, fails RHR train B HTX and pump B seal cooler.
EE-CST-LVL	Flag representing line supplying water to HPCS pump from the CST, with other failure fails HPCS suction.
FLOW-RHR-A3	Flag for diversion flow around RHR train A HTX, fails RHR train A heat removal with other fault.
FLOW-RHR-B3	Flag for diversion flow around RHR train B HTX, fails RHR train B heat removal with other fault.
HC001CB-BCO-LF	HPCS pump 2E22-C001 circuit breaker fails open, local fault, fails HPCS.
HCSC001C-P-UUM	HPCS pump 2E22-C001 unavailable due to maintenance, fails HPCS.
HCSC001C-PMS-CS	HPCS pump 2E22-C001 control circuit faults, fails HPCS.
HCSC001C-PMS-LF	HPCS pump 2E22-C001 local fault, fails HPCS.
HCSD001X-STR	HPCS suppression pool suction strainer 2E22-D302 (typo in name), local fault, fails HPCS.
HCSF004C-VCC-LF	HPCS injection MOV 2E22-F004 fails closed, fails HPCS.

Table 3.17 (Continued)

Random (Internal Event) Basic Event Descriptions

Random Failure	Description
HCSF015C-VCC-LF	HPCS suppression pool suction MOV 2E22-F015 fails closed, fails HPCS.
LCSC002A-P-UUM	LPCS water leg pump 2E21-C002 maintenance, fails train A RHR due to isolation requirements.
LPCI-BETA	Beta factor for LPCI pump common mode failure, fails all trains of RHR.
LPCI-MOV-BETA	Beta factor for LPCI MOV common mode failure, fails all trains of RHR.
LPCI-MOV-CM1	Random failure of one MOV for MOV set 1, used in conjunction with MOV beta, fails all trains of RHR.
LPCI-MOV-CM2	Random failure of one MOV for MOV set 2, used in conjunction with MOV beta, fails all trains of RHR.
LPCI-PMS-CM	Random failure for one LPCI pump used in conjunction with with pump beta factor, fails all trains of RHR.
NLOSP	No Loss of Offsite occurs from events outside of the plant.
NOFLOW-RHR-A1	Flag for no flow in RHR suction from suppression pool, with other fault fails RHR train A.
NOFLOW-RHR-B1	Flag for no flow in RHR suction from suppression pool, with other fault fails RHR train B.
NWVB001X-BCO-LF	HVAC fan 2VY01C circuit breaker, fails open, fails room cooling to LPCI train A, fails RHR train A.
NWVY01AX-A-UUM	HVAC fan 2VY01C unavailable due to maintenance on air cooler 2VY01A, fails room cooling to train A of RHR.
NWVY01AX-ACX-LFI	Inadaquate heat removal in northwest room air cooler 2VY01A, fails room cooling to LPCI train A.

Table 3.17 (Continued)

Random (Internal Event) Basic Event Descriptions

Random Failure	Description
NWVY01CA-F-UUM	HVAC fan 2VY01C maintenance, fails room cooling to LPCI train A, fails RHR train A.
NWVY01CA-FMS-CC	HVAC fan 2VY01C control circuit faults, fails room cooling to LPCI train A, fails RHR train A.
NWVY01CA-FMS-LF	HVAC fan 2VY01C local fault, fails room cooling to LPCI train A, fails RHR train A.
OPFAIL-VENT-2H	Operator fails to vent containment within 2 hours of reaching setpoint.
PC02AAAX-AOO-LFO	Auxiliary contacts PC02AA fail open, fails northwest room cooling fan, fails RHR train A.
RHR301AX-STR	Suppression pool suction strainer 2E12-D301A faults, fails RHR train A.
RHR301BX-STR	Suppression pool suction strainer 2E12-D301B faults, fails RHR train B.
RHRB01AA-BOO-CC	RHR pump 2E12-C002A power breaker control circuit faults, fails RHR train A.
RHRB01AA-BOO-LF	RHR pump 2E12-C002A power breaker local fault, fails RHR train A.
RHRB01BB-BOO-CC	RHR pump 2E12-C002B power breaker control circuit faults, fails RHR train B.
RHRB01BB-BOO-LF	RHR pump 2E12-C002B power breaker local fault, fails RHR train B.
RHRB03AX-BCO-LF	Local fault of power breaker to RHR HTX discharge valve MOV 2E12-F003A, fails train A of RHR.
RHRB03BX-BCO-LF	Local fault of power breaker to RHR HTX discharge valve MOV 2E12-F003B, fails train B of RHR.
RHRC003B-P-UUM	RHR water leg pump 2E12-C003 maintenance, fails train B RHR due to isolation requirements.

Table 3.17 (Continued)

Random (Internal Event) Basic Event Descriptions

Random Failure	Description
RHRC02AA-P-NDUUM	RHR pump 2E12-C002A unavailable because of non-destructive maintenance, fails RHR train A.
RHRC02AA-P-UUM	RHR pump 2E12-C002A unavailable because of destructive maintenance, fails RHR train A.
RHRC02AA-PMS-LF	RHR pump 2E12-C002A local fault, fails RHR train A.
RHRC02BB-P-NDUUM	RHR pump 2E12-C002B unavailable because of non-destructive maintenance, fails RHR train B.
RHRC02BB-P-UUM	RHR pump 2E12-C002B unavailable because of destructive maintenance, fails RHR train B.
RHRC02BB-PMS-LF	RHR pump 2E12-C002B local fault, fails RHR train B.
RHRF03AA-VOC-LF	RHR HTX discharge valve 2E12-F003A fails closed, fails RHR train A.
RHRF03BB-VOC-LF	RHR HTX discharge valve 2E12-F003B fails closed, fails RHR train B.
RHRF04AA-VOC-LF	RHR pump A suction MOV 2E12-F004A fails closed, fails RHR train A.
RHRF04BB-VOC-LF	RHR pump B suction MOV 2E12-F004B fails closed, fails RHR train B.
RHRF31AX-CCC-LF	RHR pump A discharge check valve 2E12-F031A fails closed, fails RHR train A.
RHRF31BX-CCC-LF	RHR pump B discharge check valve 2E12-F031B fails closed, fails RHR train B.
RHRF47AA-V-UUM	MOV 2E12-F047A unavailable due to maintenance, fails RHR train A heat removal.
RHRF47AA-VOC-LF	MOV 2E12-F047A fails closed, local fault, fails RHR train A heat removal.

Table 3.17 (Continued)

Random (Internal Event) Basic Event Descriptions

Random Failure	Description
RHRF47BB-V-UUM	MOV 2E12-F047B unavailable due to maintenance, fails RHR train B heat removal.
RHRF47BB-VOC-LF	MOV 2E12-F047B fails closed, local fault, fails RHR train B heat removal.
RHRF48AA-V-UUM	MOV 2E12-F048A unavailable due to maintenance, requires lock out of injection valve, fails train A RHR.
RHRF48AA-VOO-LF	MOV 2E12-F048A fails to close, local fault, diverts water from heat exchanger, fails train A RHR.
RHRF48BB-V-UUM	MOV 2E12-F048B unavailable due to maintenance, requires lock out of injection valve, fails train B RHR.
RHRF48BB-VOO-CC	MOV 2E12-F048B fails to close, control circuit fault, diverts water from heat exchanger, fails train B RHR.
RHRF48BB-VOO-LF	MOV 2E12-F048B fails to close, local fault, diverts water from heat exchanger, fails train B RHR.
RHRF51AA-N-UUM	NV 2E12-F051A unavailable due to maintenance, requires XV 2E12-F098A to be closed, fails train A of RHR.
RHRF51BB-N-UUM	NV 2E12-F051B unavailable due to maintenance, requires XV 2E12-F098B to be closed, fails train B of RHR.
RHRF55AX-R-UUM	SRV 2E12-F055A unavailable due to maintenance, requires XV 2E12-F098A to be closed, fails train A of RHR.
RHRF55BX-R-UUM	SRV 2E12-F055B unavailable due to maintenance, requires XV 2E12-F098B to be closed, fails train B of RHR.

Table 3.17 (Continued)

Random (Internal Event) Basic Event Descriptions

Random Failure	Description
RHRF60AA-S-UUM	SOV 2E12-F060A unavailable due to maintenance, requires XV 2E12-F098A to be closed, fails train A of RHR.
RHRF60BB-S-UUM	SOV 2E12-F060B unavailable due to maintenance, requires XV 2E12-F098B to be closed, fails train B of RHR.
RHRF64AA-V-UUM	MOV 2E12-F064A unavailable due to maintenance, requires XV 2E12-F098A to be closed, fails train A of RHR.
RHRF64BB-V-UUM	MOV 2E12-F064B unavailable due to maintenance, requires XV 2E12-F098B to be closed, fails train B of RHR.
RHRF65AA-N-UUM	NV 2E12-F065A unavailable due to maintenance, requires XV 2E12-F098A to be closed, fails train A of RHR.
RHRF65BB-N-UUM	NV 2E12-F065B unavailable due to maintenance, requires XV 2E12-F098B to be closed, fails train B of RHR.
RHRF74AA-V-UUM	MOV 2E12-F074A unavailable due to maintenance, requires XV 2E12-F098A to be closed, fails train A of RHR.
RHRF74BB-V-UUM	NV 2E12-F074B unavailable due to maintenance, requires XV 2E12-F098B to be closed, fails train B of RHR.
RHRF87AA-V-UUM	MOV 2E12-F087A unavailable due to maintenance, requires XV 2E12-F098A to be closed, fails train A of RHR.
RHRF87BB-V-UUM	NV 2E12-F087B unavailable due to maintenance, requires XV 2E12-F098B to be closed, fails train B of RHR.
RHRF88AX-R-UUM	SRV 2E12-F088A unavailable due to maintenance, requires XV 2E12-F098A to be closed, fails train A of RHR.

Table 3.17 (Continued)

Random (Internal Event) Basic Event Descriptions

Random Failure	Description
RHRF88BX-R-UUM	SRV 2E12-F088B unavailable due to maintenance, requires XV 2E12-F098B to be closed, fails train B of RHR.
RHRF98AX-XOC-LF	RHR pump discharge manual value 2E12-F098A failed closed, fails RHR train A.
RHRF98BX-XOC-LF	RHR pump discharge manual value 2E12-F098B failed closed, fails RHR train B.
RHRH01AX-H-UUM	RHR heat exchanger 2E12-B001A unavailable due to maintenance, fails RHR train A.
RHRH01AX-HTX-LFB	RHR heat exchanger 2E12-B001A failed due to blockage, fails train A of RHR for CHR.
RHRH01BX-H-UUM	RHR heat exchanger 2E12-B001B unavailable due to maintenance, fails RHR train B.
RHRH01BX-HTX-LFB	RHR heat exchanger 2E12-B001B failed due to blockage, fails train B of RHR for CHR.
RLOSP	Random Loss of Offsite power occurring after the fire initiating event from events outside the plant.
SCSF06AA-DENER	Flag for MOV 2E12-F006A racked out due to maintenance on other components, fails SCS train A mode of RHR.
SCSF06AA-V-UUM	MOV 2E12-F006A unavailable due to maintenance, fails SCS train A mode of RHR.
SCSF06BB-DENER	Flag for MOV 2E12-F006B racked out due to maintenance on other components, fails SCS train B mode of RHR.
SCSF06BB-V-UUM	MOV 2E12-F006B unavailable due to maintenance, fails SCS train B mode of RHR.
SEVB001X-BCO-LF	HVAC fan 2VY03C circuit breaker, fails open, fails room cooling to train B and C of RHR.

Table 3.17 (Concluded)

Random (Internal Event) Basic Event Descriptions

Random Failure	Description
SEVY03AX-A-UUM	HVAC fan 2VY03C unavailable due to maintenance on air cooler 2VY03A, fails room cooling to train B and C of RHR.
SEVY03AX-ACX-LFI	Inadaquate heat removal in southeast room air cooler 2VY03A, fails room cooling to train B and C of RHR.
SEVY03CB-F-UUM	HVAC fan 2VY03C maintenance, fails room cooling to train B and C of RHR.
SEVY03CB-FMS-CC	HVAC fan 2VY03C control circuit faults, fails room cooling to train B and C of RHR.
SEVY03CB-FMS-LF	HVAC fan 2VY03C local fault, fails room cooling to train B and C of RHR.
SUR-002-L	Failure of HPCS from severe environments after containment leak to the reactor building.
SUR-007-V	Failure of HPCS and fire water from severe environments after containment venting to the reactor building.
SUR-027-R	Failure of HPCS and fire water from severe environments after containment rupture to the reactor building.
SWVB001X-BCO-LF	HVAC fan 2VY02C circuit breaker, fails open, fails room cooling to HPCS.
SWVY02AX-ACX-LFI	Inadaquate heat removal in southwest room air cooler 2VY02A, fails room cooling to HPCS.
SWVY02CC-F-UUM	HVAC fan 2VY02C maintenance, fails room cooling to HPCS.
SWVY02CC-FMS-CC	HVAC fan 2VY02C control circuit faults, fails room cooling to HPCS.
SWVY02CC-FMS-LF	HVAC fan 2VY02C local fault, fails room cooling to HPCS.

(text continued from page 3-87)
control room was performed. The interaction with the remote shutdown panel was also studied. The details of this analysis can be found in the Fire Risk Scoping Study.[4]

This analysis found that, if multiple spurious actuations occurred within one subsection of the electrical distribution panel, then the RCIC steam inboard isolation would close, which would fail the RCIC system if no operator intervention took place. However, valve indication is provided on the remote shutdown panel and it is felt that this actuation would not significantly affect the probability of plant recovery, given smoke-induced control room abandonment. Also, because the control room cabinets at LaSalle have open tops, it was assumed that any fire would spread to adjacent cabinets through the top of the panel and to the cable runs above and damage sufficient equipment to result in core damage unless systems were recovered at the remote shutdown panel or locally. Since this design is atypical, for the Fire Risk Scoping Study, the assumption was made that the tops of the cabinets were solid in order to investigate the significance of control room fires for configurations that exist at other plants.

Sandia-sponsored fire tests[18,19] indicate that, given fire ignition in a cabinet in an area the same relative size as the LaSalle control room, smoke engulfed the entire area descending to the floor in approximately 6 min. This occurred with ventilation rates of up to ten room changes per hour. Generic control room fire data indicate that four fires have occurred, all of which have been rapidly extinguished by control room personnel. However, because of the design of the LaSalle cabinets, smoke from a fire will initially exit the top of the cabinets and be partially removed by the ventilation system which is situated directly over the cabinets. This reduces the chance of detection in the early stages of the fire growth. This is partially offset by the fact that the control room is continually manned and, consequently, the factor f_R gives credit that 90 percent of all fires will be extinguished before the fire grows to large and smoke forces abandonment of the control room. An area ratio term does not appear in the core damage equation because no subsequent specific damage has to occur (i.e., it is assumed that the fire will damage sufficient equipment to require manual recovery of ECCS system from outside the control room).

Therefore, for LaSalle, only one control room scenario was considered: a fire starts in some cabinet, the fire is not suppressed before smoke requires abandonment of the control room, the fire damages sufficient equipment to require manual operation, and the operators fail to recover injection and containment heat removal from the remote shutdown panel. This corresponds to transient sequence 1. Thus, the core damage equation is as follows:

$$u_{cm} = k_{CR}\ f_R\ R_{OP1}$$

where:

u_{cm} = fire-induced core damage frequency for the control room,

k_{CR} = control room fire frequency,

f_R = that percentage of fires that is not manually extinguished before smoke forces control room abandonment, and

R_{OP1} = probability that operators will not successfully recover the plant from the remote shutdown panel.

Table 3.18 gives the values of all terms in the core damage equation for the control room as well as their associated distributions. Best estimate values and upper and lower bounds (which represent means, 5 and 95 percentiles, respectively, for Gamma and Lognormal distributions) are given in the table.

Table 3.18

Control Room Core Damage Equation Terms and Distributions

	Distribution	Best Estimate	Lower Bound	Upper Bound
k_{CR}	Gamma	1.85E-3	<1.0E-8	2.49E-3
f_R	Maximum Entropy	0.10	0.01	0.25
R_{OP1}	Maximum Entropy	0.064	6.40E-3	0.64

The recovery term for operation of the remote shutdown panel was quantified consistently with similar recovery terms in the internal events analysis. Specifically the following items were considered in the determination of the recovery probability: (1) interactions between fire-induced control room faults and the remote shutdown panel or local equipment through control and actuation circuits, (2) random failure of the equipment being recovered, (3) the limited amount of equipment operated from the remote shutdown panel, (4) operator procedures for use of the remote shutdown panel, and (5) human factors concerns. The result is similar to that used in NUREG-1150[20] and is slightly less conservative than that used in other current fire analyses.

3.10.3 Fire Area E, Location 5C11-4, Turbine Building Corridor

This fire area is a corridor at an elevation of 710 ft. adjacent to the Unit 2, Division 1, essential switchgear room. A very large fire was

found to lead to either transient sequence 2 or 3A. Fire-induced damage occurred due to formation of a hot gas layer failing cabling high in the ceiling.

Fire-related damage failed all or part of the following systems:

a. SPC
b. CSS
c. SCS
d. Venting

Additional random failures were required to obtain core damage, and are represented by the term Σ_{RE2} or Σ_{RE3A} in Table 3.32 (page 3-122). The core damage equation for fire area E is as follows:

$$\phi_{cm} = \lambda_{TB}\ f_{AE}\ f_{A1}\ f_{S1}\ Q_1\left(\tau_G\right)\ \Sigma_{RE} \quad ,$$

where:

ϕ_{cm} = fire-induced core damage frequency for fire area E,

λ_{TB} = turbine building fire frequency,

f_{AE} = area ratio of fire area E to that of the turbine building,

f_{A1} = area ratio within fire area E where a very large fire can damage the critical equipment,

f_{S1} = severity ratio for a very large fire (half that of a large fire), and

$Q_1(\tau_G)$ = probability that the fire will not be manually suppressed before the critical fire-induced damage occurs.

Table 3.19 gives the values of all terms in the core damage equation (except for random failures) for fire area E as well as their associated distributions.

3.10.4 Fire Area N, Location 4D2, Cable Spreading Room

The cable spreading room is located on the 749-ft. elevation of the auxiliary building. An automatic suppression system is provided in the form of a water sprinkler system with heads that spray directly downwards into the cable trays. A close inspection of actuation detector spacing and sprinkler locations is judged by the analysts to allow full credit for this system's operability and, thus, generic system reliability data is used in the quantification of this sprinkler system's failure rate.

Table 3.19

Fire Area E Core Damage Equation Terms and Distributions

	Distribution	Best Estimate	Lower Bound	Upper Bound
k_{TB}	Gamma	0.036	5.50E-3	0.096
f_{AE}	Maximum Entropy	3.80E-3	7.60E-4	0.019
f_{A1}	Maximum Entropy	0.30	0.06	1.0
f_{S1}	Maximum Entropy	0.17	0.01	0.30
$Q_1(s_G)$	Maximum Entropy	0.83	0.18	1.0

This fire area was found to lead to transient sequence 3A with fire-related damage failing all or part of the following systems:

a. SPC
b. CSS
c. SCS
d. MSS
e. Venting

Additional random failures were required to lead to core damage and are represented by the term R_{RN} in Table 3.32 (page 3-122).

The core damage equation for fire area N is as follows:

$$u_{cm} = k_{CSR}\ f_{A2}\ f_{S2}\ Q_{WS}\ Q_{2d}\ b_{s}\ r_{Gt}\ R_{RN} \quad ,$$

where:

u_{cm} = fire-induced core damage frequency for fire area N,

k_{CSR} = cable spreading room fire frequency,

f_{A2} = area frequency ratio within fire area N where a large fire can damage the critical components,

f_{S2} = severity ratio for a large fire,

Q_{WS} = probability that the automatic sprinkler system will not suppress the fire before the critical damage occurs, and

$Q_2(\tau_G)$ = probability that the fire will not be manually suppressed before the critical damage occurs.

Table 3.20 gives the values of all terms in the core damage equation (except for random failures) for fire area N as well as their associated distributions.

3.10.5 Fire Area P, Location 4D4, Electrical Equipment Room

The electrical equipment room is located on the 749-ft. elevation of the auxiliary building. This fire area was found to lead to transient sequence 3A.

Fire-related damage failed all or parts of the following systems:

a. SPC
b. CSS
c. SCS
d. MSS
e. Venting

Additional random failures were required to lead to core damage and are represented by the term Σ_{RP} in Table 3.32 (page 3-122).

Table 3.20

Fire Area N Core Damage Equation Terms and Distributions

	Distribution	Best Estimate	Lower Bound	Upper Bound
λ_{CSR}	Gamma	6.48E-3	<1.0E-8	0.027
f_{A2}	Maximum Entropy	0.15	0.03	0.75
f_{S2}	Maximum Entropy	0.30	0.19	0.67
Q_{WS}	Maximum Entropy	0.038	6.30E-3	0.047
$Q_2(\tau_G)$	Maximum Entropy	0.99	0.42	1.0

In the case of the electrical equipment room, both a large and small fire were found to be capable of damaging the critical equipment. Therefore, there are associated terms for area and severity ratios for both fire sizes.

The core damage equation for fire area P is as follows:

$$\phi_{cm} = \lambda_{aux}\ f_{AP}\ Q_3\left(\tau_G\right)\ \Sigma_{RP}\ \left(f_{A3}\ f_{S2} + f_{A4}\ f_{S3}\right) \quad ,$$

where:

ϕ_{cm} = fire-induced core damage frequency for fire area P,

λ_{aux} = auxiliary building fire frequency,

f_{AP} = area ratio of fire area P to that of the auxiliary building,

$Q_3(\tau_G)$ = probability that the fire will not be manually suppressed before the critical fire-induced damage occurs,

f_{A3} = area ratio within fire area P where a large fire can damage the critical components,

f_{S2} = severity ratio for a large fire,

f_{A4} = area ratio within fire area P where a small fire can damage the critical components, and

f_{S3} = severity ratio for a small fire.

Table 3.21 gives the values of all terms in the core damage equation (except for random failures) for fire area P as well as their associated distributions.

3.10.6 Fire Area T, Location 4E2-2, Unit 2, Auxiliary Equipment Room

The auxiliary equipment room is located on the 731-ft. elevation of the auxiliary building. This fire area was found to lead to transient sequence 3A.

Fire-related damage failed all or parts of the following systems:

a. MSS
b. SPC
c. CSS
d. SCS

Additional random failures were required to obtain core damage and are represented by the term Σ_{RT} in Table 3.32 (page 3-122).

In the case of the auxiliary equipment room, only a large fire was found to be capable of damaging the critical equipment.

Table 3.21

Fire Area P Core Damage Equation Terms and Distributions

	Distribution	Best Estimate	Lower Bound	Upper Bound
λ_{aux}	Gamma	0.049	8.50E-3	0.12
f_{AP}	Maximum Entropy	0.06	0.012	0.30
$Q_3(\tau_G)$	Maximum Entropy	0.97	0.40	1.0
f_{A3}	Maximum Entropy	0.05	0.01	0.25
f_{S2}	Maximum Entropy	0.30	0.19	0.67
f_{A4}	Maximum Entropy	0.016	3.20E-3	0.08
f_{S3}	Maximum Entropy	0.70	0.33	0.81

The core damage equation for fire area T is as follows:

$$\phi_{cm} = \lambda_{aux}\ f_{AT}\ f_{A5}\ f_{S2}\ Q_4\left(\tau_G\right)\ \Sigma_{RT} \quad ,$$

where:

ϕ_{cm} = fire-induced core damage frequency for fire area T,

λ_{aux} = auxiliary building fire frequency,

f_{AT} = area ratio of fire area T to that of the auxiliary building,

f_{A5} = area ratio within fire area T where a large fire can damage the critical components.

f_{S2} = severity ratio for a large fire, and

$Q_4(\tau_G)'$ = probability that the fire will not be manually suppressed before the critical fire-induced damage occurs.

Table 3.22 gives the values of all terms in the core damage equation (except for random failures) for fire area T as well as their associated distributions.

Table 3.22

Fire Area T Core Damage Equation Terms and Distributions

	Distribution	Best Estimate	Lower Bound	Upper Bound
λ_{aux}	Gamma	0.049	8.50E-3	0.12
f_{AT}	Maximum Entropy	0.068	0.014	0.34
f_{A5}	Maximum Entropy	0.84	0.17	1.0
f_{S2}	Maximum Entropy	0.30	0.19	0.67
$Q_4(\tau_G)$	Maximum Entropy	0.82	0.25	1.0

3.10.7 Fire Area W, Location 4E4, Unit 2, Division 2, Essential Switchgear Room

The Unit 2, Division 2, essential switchgear room is located on the 731-ft. elevation of the auxiliary building. This fire area was found to lead to transient sequence 3A.

Fire-related damage failed all or parts of the following systems:

a. SPC
b. CSS
c. MSS
d. Venting

Additional random failures were required to obtain core damage and are represented by the term Σ_{RW} in Table 3.32 (page 3-122).

Two fire scenarios can occur which have the same end result because in either case the same components' cabling will sustain fire damage.

The first fire scenario is a fire originating in a switchgear cubicle, exiting through a faulty penetration seal at the top of the cabinet, and damaging cabling that is directly above. During the plant walkdown, no inadequate cabinet penetration seals could be found. The term f_{R1} estimates that there is 1 percent probability that a faulty penetration seal exists. No area or severity terms are present since any switchgear fire is felt to have equal likelihood of exiting the top of the cabinet, given a faulty seal. Thus, the core damage equation for scenario 1 is as follows:

$$\phi_{cm} = \lambda_{SWGR}\ f_{R1}\ Q_5\left(\tau_G\right)\ \Sigma_{RW}\ ,$$

where:

ϕ_{cm} = fire-induced core damage frequency for fire area W scenario 1,

λ_{SWGR} = switchgear room fire frequency,

f_{R1} = probability that the switchgear fire will exit the top of the cabinet due to an inadequate seal, and

$Q_5(\tau_G)$ = probability that the fire will not be manually suppressed before the critical fire-induced damage occurs.

Table 3.23 gives the value of all terms in the core damage equation (except for random failures) for fire area W, scenario 1, as well as their associated distributions.

Fire scenario 2 involves a transient combustible fire failing critical cabling anywhere else in fire area W. The same fire related damage

Table 3.23

Fire Area W, Scenario 1, Core Damage Equation Terms and Distributions

	Distribution	Best Estimate	Lower Bound	Upper Bound
λ_{SWGR}	Gamma	7.97E-3	7.37E-6	0.084
f_{R1}	Maximum Entropy	0.01	1.00E-3	0.10
$Q_5(\tau_G)$	Maximum Entropy	0.98	0.42	1.0

occurs as in scenario 1; therefore, the same additional random failures are required to lead to core damage.

The core damage equation for scenario 2 is as follows:

$$\phi_{cm} = \lambda_{SWGR}\, f_{A6}\, f_{S2}\, Q_6\left(\tau_G\right)\, \Sigma_{RW} \quad ,$$

where:

ϕ_{cm} = fire-induced core damage frequency for fire area W, scenario 2,

λ_{SWGR} = switchgear room fire frequency,

f_{A6} = area ratio within fire area W where a large fire can damage the critical components,

f_{S2} = severity ratio for a large fire, and

$Q_6(\tau_G)$ = probability that the fire will not be manually suppressed before the critical fire-induced damage occurs.

Table 3.24 gives the values of all terms in the core damage equation (except for random failures) for fire area W, scenario 2, as well as their associated distributions.

3.10.8 Fire Area Y, Location 4F2, Unit 2, Division 1, Essential Switchgear Room

The Unit 2, Division 1, essential switchgear room is located on the 710-ft. elevation of the auxiliary building. This fire area was found to lead to transient sequence 3A.

Table 3.24

Fire Area W, Scenario 2, Core Damage Equation Terms and Distributions

	Distribution	Best Estimate	Lower Bound	Upper Bound
λ_{SWGR}	Gamma	7.97E-3	7.37E-6	0.084
f_{A6}	Maximum Entropy	0.18	0.036	0.90
f_{S2}	Maximum Entropy	0.30	0.19	0.67
$Q_6(\tau_G)$	Maximum Entropy	0.98	0.42	1.0

Fire-related damage failed all or parts of the following systems:

a. MSS
b. SPC
c. CSS
d. SCS
e. Venting

Additional random failures were required to obtain core damage and are represented by the term Σ_{RY} in Table 3.32 (page 3-122).

As was the case for fire area W, two scenarios were developed, one that involved a switchgear fire (scenario 1) and one in which transient combustibles damaged critical cabling (scenario 2).

Scenario 1 is represented by the following core damage equation:

$$\phi_{cm} = \lambda_{SWGR}\, f_{R1}\, Q_7\left(\tau_G\right)\, \Sigma_{RY} \quad ,$$

where:

ϕ_{cm} = fire-induced core damage frequency for fire area Y, scenario 1,

λ_{SWGR} = switchgear room fire frequency,

f_{R1} = probability that the switchgear fire will exit the top of the cabinet due to an inadequate seal, and

$Q_7(\tau_G)$ = probability that the fire will not be manually suppressed before the critical fire-induced damage occurs.

Table 3.25 gives the values of all terms in the core damage equation (except for random failures) for fire area Y, scenario 1, as well as their associated distributions.

Table 3.25

Fire Area Y, Scenario 1, Core Damage Equation Terms and Distributions

	Distribution	Best Estimate	Lower Bound	Upper Bound
λ_{SWGR}	Gamma	7.97E-3	7.37E-6	0.084
f_{R1}	Maximum Entropy	0.01	1.00E-3	0.10
$Q_7(\tau_G)$	Maximum Entropy	0.95	0.23	1.0

Scenario 2 is represented by the following core damage equation:

$$\phi_{cm} = \lambda_{SWGR}\ f_{A7}\ f_{S2}\ Q_8\left(\tau_G\right)\ \Sigma_{RY} \quad ,$$

where:

ϕ_{cm} = fire-induced core damage frequency for fire area Y, scenario 2,

λ_{SWGR} = switchgear room fire frequency,

f_{A7} = area ratio within fire area Y where a large fire can damage the critical components,

f_{S2} = severity ratio for a large fire, and

$Q_8(\tau_G)$ = probability that the fire will not be manually suppressed before the critical fire-induced damage occurs.

Table 3.26 gives the values of all terms in the core damage equation (except for random failures) for fire area Y, scenario 2, as well as their associated distributions.

3.10.9 Fire Area Z, Location 4F3, Auxiliary Building Rad/Chem Offices

The auxiliary building rad/chem offices are located on the 710-ft. elevation. This fire area was found to lead to transient sequence 3A.

Table 3.26

Fire Area Y, Scenario 2, Core Damage Equation Terms and Distributions

	Distribution	Best Estimate	Lower Bound	Upper Bound
λ_{SWGR}	Gamma	7.97E-3	7.37E-6	0.084
f_{A7}	Maximum Entropy	0.13	0.026	0.65
f_{S2}	Maximum Entropy	0.30	0.19	0.67
$Q_8(\tau_G)$	Maximum Entropy	0.95	0.23	1.0

Fire-related damage failed all or parts of the following systems:

a. MSS
b. CSS
c. SPC
d. SCS
e. Venting

Additional random failures were required to obtain core damage and are represented by the term Σ_{RZ} in Table 3.32 (page 3-122).

In the case of the rad/chem offices area, only a large fire was found to be capable of damaging the critical equipment.

The core damage equation for fire area Z is as follows:

$$\phi_{cm} = \lambda_{aux}\ f_{AZ}\ f_{A8}\ f_{S2}\ Q_9\left(\tau_G\right)\ \Sigma_{RZ} \quad ,$$

where:

ϕ_{cm} = fire-induced core damage frequency for fire area Z,

λ_{aux} = auxiliary building fire frequency,

f_{AZ} = area ratio of fire area Z to that of the auxiliary building,

f_{A8} = area ratio within fire area Z where a large fire can damage the critical components,

f_{S2} = severity ratio for a large fire, and

$Q_9(\tau_G)$ = probability that the fire will not be manually suppressed before the critical fire-induced damage occurs.

Table 3.27 gives the values of all terms in the core damage equation (except for random failures) for fire area Z as well as their associated distributions.

3.10.10 Fire Area AA, Location 5B13-2, BOP Cable Area North

The BOP cable area north is located on the 731-ft. elevation of the auxiliary building. This fire area was found to lead to transient sequence 3A.

Fire-related damage failed all or parts of the following systems:

a. MSS
b. CSS
c. SPC
d. SCS
e. Venting

Table 3.27

Fire Area Z Core Damage Equation Terms and Distributions

	Distribution	Best Estimate	Lower Bound	Upper Bound
λ_{aux}	Gamma	0.049	8.50E-3	0.12
f_{AZ}	Maximum Entropy	0.082	0.016	0.41
f_{A8}	Maximum Entropy	5.00E-3	1.00E-3	0.025
f_{S2}	Maximum Entropy	0.30	0.19	0.67
$Q_9(\tau_G)$	Maximum Entropy	0.91	0.28	1.0

Additional random failures were required to obtain core damage and are represented by the term Σ_{RAA} in Table 3.32 (page 3-122).

In the case of the BOP cable area north, only a large fire was found to be capable of damaging the critical equipment.

The core damage equation for fire area AA is as follows:

$$\phi_{cm} = \lambda_{aux}\ f_{AAA}\ f_{A9}\ f_{S2}\ Q_{10}\left(\tau_G\right)\ \Sigma_{RAA} \quad ,$$

where:

ϕ_{cm} = fire-induced core damage frequency for fire area AA,

λ_{aux} = auxiliary building fire frequency,

f_{AAA} = area ratio of fire area AA to that of the auxiliary building,

f_{A9} = area ratio within fire area AA where a large fire can damage the critical components,

f_{S2} = severity ratio for a large fire, and

$Q_{10}(\tau_G)$ = probability that the fire will not be manually suppressed before the critical fire-induced damage occurs.

Table 3.28 gives the values of all terms in the core damage equation (except for random failures) for fire area AA as well as their associated distributions.

Table 3.28

Fire Area AA Core Damage Equation Terms and Distributions

	Distribution	Best Estimate	Lower Bound	Upper Bound
λ_{aux}	Gamma	0.049	8.50E-3	0.12
f_{AAA}	Maximum Entropy	0.064	0.013	0.32
f_{A9}	Maximum Entropy	0.08	0.016	0.40
f_{S2}	Maximum Entropy	0.30	0.19	0.67
$Q_{10}(\tau_G)$	Maximum Entropy	0.93	0.45	1.0

3.10.11 Fire Area AC, Location 4E4-1, Cable Shaft Room Adjacent to Unit 2, Division 2, Essential Switchgear Room

This cable shaft room is located on the 731-ft. elevation of the auxiliary building. A small fire located anywhere in this area was found to lead to transient sequence 3A. Rapid formation of a hot gas layer failed all susceptible cabling. Therefore, room-specific area and severity ratio terms were taken to be unity and do not appear in the core damage equation.

Fire-related damage failed all or parts of the following systems:

a. MSS
b. CSS
c. SPC
d. SCS
e. Venting

Additional random failures were required to obtain core damage and are represented by the term Σ_{RAC} in Table 3.32 (page 3-122).

The core damage equation for fire AC is as follows:

$$\phi_{cm} = \lambda_{aux} \, f_{AAC} \, Q_{11}\left(\tau_G\right) \, \Sigma_{RAC} \quad ,$$

where:

ϕ_{cm} = fire-induced core damage frequency for fire area AC,

λ_{aux} = auxiliary building fire frequency,

f_{AAC} = area ratio of fire area AC to that of the auxiliary building, and

$Q_{11}(\tau_G)$ = probability that the fire will not be manually suppressed before the critical fire-induced damage occurs.

Table 3.29 gives the values of all terms in the core damage equation (except for the random failures) for fire area AC as well as their associated distributions.

3.10.12 Fire Areas S, Location 4E2-1, Unit 2, Auxiliary Equipment Room

The Unit 2 auxiliary equipment room is located on the 731-ft. elevation of the auxiliary building. This fire area was found to have two fire scenarios, both of which lead to transient sequence 3A.

For both scenarios, fire-related damage failed all or parts of the following systems:

Table 3.29

Fire Area AC Core Damage Equation Terms and Distributions

	Distribution	Best Estimate	Lower Bound	Upper Bound
λ_{aux}	Gamma	0.049	8.50E-3	0.12
f_{AAC}	Maximum Entropy	1.60E-3	3.20E-4	8.00E-3
$Q_{11}(\tau_G)$	Maximum Entropy	0.99	0.46	1.0

a. MSS
b. CSS
c. SPC
d. SCS
e. Venting

In scenario 1, a cable run originating in fire area AA is damaged by the fire. Therefore, the same additional random failures that were required to obtain core damage in fire area AA are also required in scenario 1 and are represented by the term $\Sigma_{RS(AA)}$ in Table 3.32 (page 3-122).

For both scenarios, only a large fire was found to be capable of damaging the critical cabling.

The core damage equation for fire area S, scenario 1, is as follows:

$$\phi_{cm} = \lambda_{aux}\ f_{AS}\ f_{A10}\ f_{S2}\ Q_{12}\left(\tau_G\right)\ \Sigma_{RS(AA)}$$

where:

ϕ_{cm} = fire-induced core damage frequency for fire area S, scenario 1,

λ_{aux} = auxiliary building fire frequency,

f_{AS} = area ratio of fire area S to that of the auxiliary building,

f_{A10} = area ratio within fire area S where a large fire can damage the critical components,

f_{S2} = severity ratio for a large fire, and

$Q_{12}(\tau_G)$ = probability that the fire will not be manually suppressed before the critical fire-induced damage occurs.

Table 3.30 gives the values of all terms in the core damage equation (except for random failures) for fire area S, scenario 1, as well as their associated distributions.

In scenario 2 a cable run originating in fire area W is damaged by the fire. Therefore, the same additional random failures that were required to obtain core damage in fire area W are also required in scenario 2 and are represented by term $\Sigma_{RS(W)}$ in Table 3.32 (page 3-122).

The core damage equation for fire area S, scenario 2, is as follows:

$$\phi_{cm} = \lambda_{aux}\ f_{AS}\ f_{A11}\ f_{S2}\ Q_{12}\left(\tau_G\right)\ \Sigma_{RS(W)}$$

where all terms are as previously defined for scenario 1, except the area ratio for large fires, term f_{A11}.

Table 3.30

Fire Area S, Scenario 1, Core Damage Equation Terms and Distributions

	Distribution	Best Estimate	Lower Bound	Upper Bound
λ_{aux}	Gamma	0.049	8.50E-3	0.12
f_{AS}	Maximum Entropy	0.028	5.60E-3	0.14
f_{A10}	Maximum Entropy	0.11	0.022	0.55
f_{S2}	Maximum Entropy	0.30	0.19	0.67
$Q_{12}(\tau_G)$	Maximum Entropy	0.97	0.40	1.0

Table 3.31 gives the values of all terms in the core damage equation (except for random failures) for fire area S, scenario 2, as well as their associated distributions.

Table 3.31

Fire Area S, Scenario 2, Core Damage Equation Terms and Distributions

	Distribution	Best Estimate	Lower Bound	Upper Bound
λ_{aux}	Gamma	0.049	8.50E-3	0.12
f_{AS}	Maximum Entropy	0.028	5.60E-3	0.14
f_{S11}	Maximum Entropy	0.11	0.022	0.55
$Q_{12}(\tau_G)$	Maximum Entropy	0.97	0.40	1.0

3.11 Conclusions

A detailed screening analysis found that most plant areas had a negligible contribution to fire-induced core damage frequency. The following eleven areas had core damage contributions of greater than 1E-09 per year:

a. Control Room
b. Turbine Building Corridor
c. Cable Spreading Room
d. Electrical Equipment Room
e. Auxiliary Equipment Room (2 areas)
f. Division 2 Essential Switchgear Room
g. Division 1 Essential Switchgear Room
h. Auxiliary Building Rad/Chem Offices
i. BOP Cable Area North
j. Cable Shaft Area

The final detailed analysis showed that the overall total (mean) core damage frequency was 3.21E-5 per year.

In all areas, additional failures of equipment and/or operators were required to lead to core damage. Adequate separation of equipment and/or cabling between redundant functions had the effect of reducing core damage frequency for these areas.

In the case of the control room, smoke-induced abandonment and subsequent transfer of control of the plant to the remote shutdown panel was found to be the dominant scenario. Installation of an independent and redundant means of plant control (remote shutdown panel) significantly reduced the core damage frequency contribution from this area.

Detailed tracing of control, power, and actuation circuitry/cabling revealed that fires could damage the most plant safety functions in cable "pinchpoint" areas. A similar conclusion was reached in the performance of the NUREG-1150 fire risk assessments. In the LaSalle analysis, the level of detail of cable tracing was significantly greater than in the NUREG-1150 analyses. Because of this added detail, many more fire scenarios arose in the initial phases of screening. However, most of these scenarios could be screened from further study by allowing operator recovery of random failures. Most of these additional scenarios involved actuation circuitry failures that could be easily recovered from the control room. Therefore, the final number of fire areas that survived screening as well as the total fire-induced core damage frequency is similar to that found in the NUREG-1150 plants, but for different reasons associated with plant-specific cabling configurations at the plants.

For specific fire scenario contributions to core damage frequency, refer to Table 3.1. The event sequences into which each of these fire scenarios mapped are given in Table 3.2.

In Appendix F selected portions of the uncertainty analysis (TEMAC code) output are given for each fire scenario and also for the total (combined) fire-induced core damage frequency. The reader is referred to this appendix for details of each of the fire scenarios. A discussion of the total core damage uncertainty analysis is presented in the following paragraphs.

The TEMAC code produces the following three importance/uncertainty measures:

a. Risk reduction--For each basic event (either fire related or random factor), its probability is set to zero and the reduction in core damage frequency is calculated.

b. Risk increase--For each basic event its probability is set to 1.0 and the increase in core damage frequency is calculated.

c. Uncertainty importance--For each basic event, its distribution is eliminated from the overall uncertainty calculation by setting the event to its mean value and the percent decrease in the logarithm of the overall uncertainty is then calculated.

The five most dominant basic events from a risk reduction standpoint (listed in order of importance) are:

a. R_{op1}--Probability that operators will unsuccessfully control the plant from the remote shutdown panel.

b. λ_{CR}--Control room fire frequency.

c. F_R--Fraction of fires that are not suppressed before smoke-induced abandonment of the control room.

d. F_{S2}--Fraction of large fires.

e. SUR-002-L--Late failure of HPCS from severe environments in the reactor building after containment leakage.

Basic events a through c are of equal importance because each occurs solely in the dominant cut set which contributes 64 percent of the total core damage frequency. Basic event d appears in approximately 61 percent of the cut sets and has a relatively high probability (0.3). It only occurs in TW sequences in areas outside the control room. Basic event e appears in 49 percent of the cut sets and also has a relatively high probability (0.16). It occurs only in TW sequences with containment failure by leakage to the reactor building.

The five most dominant basic events from a risk increase standpoint (listed in order of importance) are:

a. R_{op1}--Probability that operators will unsuccessfully control the plant from the remote shutdown panel.

b. F_{AAC}--Area ratio of fire area AC to that of the auxiliary building.

c. F_R--Fraction of fires that are not suppressed before smoke-induced abandonment of the control room.

d. 1EB236B-BCO-LF--AC circuit breaker to 236X and 236Y fails open, fails train B of AC power and RHR train B.

e. 1EB36YB-BCO-LF--AC circuit breaker to bus 236Y fails open, fails train B of AC power and RHR train B.

Basic events a and c appear only in the dominant cut set and due to their different mean values have a different magnitude of increase in risk. Basic event b does not appear in the most dominant cut sets but its mean value (1.6E-3) is small and an increase in its probability results in a significant increase in core damage frequency. Basic events d and e have very small probabilities (7.2E-05) and appear in enough cut sets that they contribute significantly to the risk increase.

The five most dominant basic events from an uncertainty importance standpoint (listed in order of importance) are:

a. SUR-002-L--Late failure of HPCS from severe environments in the reactor building after containment leakage.

b. λ_{CR}--Control room fire frequency.

c. SUR-007-V--Late failure of HPCS and diesel-driven fire water from severe environments in the reactor building after containment venting.

d. λ_{AUX}--Auxiliary building fire frequency.

e. F_{AT}--Area ratio of fire area T to that of the auxiliary building.

Basic event a, which appears in the second largest cut set, is a combination of the probability of containment leakage to the reactor building and subsequent HPCS failure. The containment leakage probability is sampled zero-one (see Volume 2 of this report for more discussion of this) and this results in a wide variation in the cut set probabilities for the cut sets in which it appears. Basic event b appears in the dominant cut set and has a large uncertainty. Basic event c appears in the third and fourth largest cut sets and is a combination of severe environment failure of HPCS and operator failure to initiate the diesel-driven fire water system. Both of these events have large uncertainty bounds. Basic event d appears in the third largest cut set and has a large uncertainty bound, although not as large as the control room fire frequency. Basic event e appears in the third largest cut set and has a large uncertainty bound.

If one looks at the complete set of importance uncertainty results in Appendix F, it can be seen that both random failure and fire events contribute significantly at all levels of importance and uncertainty. This results from the LaSalle design which requires both random and fire events to occur in most cut sets leading to core damage and, therefore, uncertainties in both groups of events are relatively equal. This result would not occur for plants which had less physical separation of redundant safety systems.

There are two other potentially significant insights arising out of this analysis pertaining to the two dominant contributors: control room and switchgear cabinet fires. The first insight pertains to control room fires. The LaSalle control room cabinets are not sealed at the top. This is atypical of control room cabinets and was assessed to increase significantly the probability of a fire spreading to other cabinets and affecting the cable runs above the cabinets. If tops were put on the cabinets, the probability of a fire speading to other cabinets could be decreased significantly. The fire experts for this analysis estimated that at least a factor of ten improvement could be obtained in the estimate of the scenario frequency. The second insight pertains to the switchgear cabinet fires. While no obvious deficiencies were observed in the seals on our inspection, if a fire in the switchgear could penetrate a faulty seal and take out the cables in the trays above the cabinets, the severity of these fires and their relative importance to the core damage frequency would increase significantly. It might be worthwhile, therefore, to inspect these seals on a regular basis.

As a result of the application of these methods to the LaSalle plant and to the Peach Bottom and Surry plants in the NUREG-1150 analyses, fire analyses can now be performed to a level of detail equaling that of the internal events analyses. The core damage frequency estimates can be compared directly to the internal event results, and one integrated analysis combining the results of the internal event analysis with the fire and other external events analyses can be accomplished. This integrated analysis gives a means of directly comparing the importance of events regardless of the analysis/analyses in which they occur. The integrated analysis for LaSalle is documented in Volume 2 of this report.

Table 3.32A

Random Failure Equation for Sequence 2

Σ_{RE2} =
1EB43C-BCO-LF +
CCBC002-BCO-LF +
CSCC002-PMS-CC +
CSCC002-PMS-LF +
CSCC002-P-UUM +
CSCD300-PLG-LF +
EE-CSCD300-PLG +
NLOSP +
RLOSP +
HC001CB-BCO-LF +
HCSC001C-PMS-CS +
HCSC001C-PMS-LF +
HCSC001C-P-UUM +
HCSD001X-STR * EE-CST-LVL +
HCSF004C-VCC-LF +
HCSF015C-VCC-LF * EE-CST-LVL +
SWVB001X-BCO-LF +
SWVY02AX-ACX-LFI +
SWVY02CC-FMS-CC +
SWVY02CC-FMS-LF +
SWVY02CC-F-UUM.

Table 3.32B

Random Failure Equations for Sequence 3A

Σ_{RAA} =

CSCF068A-VCC-LF * DG2A-GEN-LF-FTR * NLOSP * CONT-LEAK * SUR-002-L +
DG2A-GEN-LF-FTR * RHRB01AA-BOO-LF * NLOSP * CONT-LEAK * SUR-002-L +
DG2A-GEN-LF-FTR * NLOSP * RHRH01AX-HTX-LFB * CONT-LEAK * SUR-002-L +
DG2A-GEN-LF-FTR * RHRF48AA-VOO-LF * NLOSP * FLOW-RHR-A3 * CONT-LEAK * SUR-002-L +
DG2A-GEN-LF-FTR * RHRC02AA-P-UUM * SCSF06AA-DENER * NLOSP * CONT-LEAK * SUR-002-L +
DG2A-GEN-LF-FTR * NOFLOW-RHR-A1 * RHR301AX-STR * NLOSP * CONT-LEAK * SUR-002-L +
DG2A-GEN-LF-FTR * NLOSP * CODG01P-PMS-LF * CONT-LEAK * SUR-002-L +
DG2A-GEN-LF-FTR * NLOSP * LCSC002A-P-UUM * CONT-LEAK * SUR-002-L +
DG2A-GEN-LF-FTR * NLOSP * RHRC02AA-PMS-LF * CONT-LEAK * SUR-002-L +
CSCF068A-VCC-LF * DG2A-GEN-LF-FTS * NLOSP * CONT-LEAK * SUR-002-L +
DG2A-GEN-LF-FTS * RHRB01AA-BOO-LF * NLOSP * CONT-LEAK * SUR-002-L +
DG2A-GEN-LF-FTS * NLOSP * RHRH01AX-HTX-LFB * CONT-LEAK * SUR-002-L +
DG2A-GEN-LF-FTS * RHRF48AA-VOO-LF * NLOSP * FLOW-RHR-A3 * CONT-LEAK * SUR-002-L +
DG2A-GEN-LF-FTS * RHRC02AA-P-UUM * SCSF06AA-DENER * NLOSP * CONT-LEAK * SUR-002-L +
DG2A-GEN-LF-FTS * NOFLOW-RHR-A1 * RHR301AX-STR * NLOSP * CONT-LEAK * SUR-002-L +
DG2A-GEN-LF-FTS * NLOSP * CODG01P-PMS-LF * CONT-LEAK * SUR-002-L +
DG2A-GEN-LF-FTS * NLOSP * LCSC002A-P-UUM * CONT-LEAK * SUR-002-L +
DG2A-GEN-LF-FTS * NLOSP * RHRC02AA-PMS-LF * CONT-LEAK * SUR-002-L
CSCF068A-VCC-LF * DG2A-GEN-LF-FTR * NLOSP * /CONT-LEAK * SUR-027-R +
DG2A-GEN-LF-FTR * RHRB01AA-BOO-LF * NLOSP * /CONT-LEAK * SUR-027-R +
DG2A-GEN-LF-FTR * NLOSP * RHRH01AX-HTX-LFB * /CONT-LEAK * SUR-027-R +
DG2A-GEN-LF-FTR * RHRF48AA-VOO-LF * NLOSP * FLOW-RHR-A3 * /CONT-LEAK * SUR-027-R +
DG2A-GEN-LF-FTR * RHRC02AA-P-UUM * SCSF06AA-DENER * NLOSP * /CONT-LEAK * SUR-027-R +
DG2A-GEN-LF-FTR * NOFLOW-RHR-A1 * RHR301AX-STR * NLOSP * /CONT-LEAK * SUR-027-R +
DG2A-GEN-LF-FTR * NLOSP * CODG01P-PMS-LF * /CONT-LEAK * SUR-027-R +
DG2A-GEN-LF-FTR * NLOSP * LCSC002A-P-UUM * /CONT-LEAK * SUR-027-R +
DG2A-GEN-LF-FTR * NLOSP * RHRC02AA-PMS-LF * /CONT-LEAK * SUR-027-R +
CSCF068A-VCC-LF * DG2A-GEN-LF-FTS * NLOSP * /CONT-LEAK * SUR-027-R +
DG2A-GEN-LF-FTS * RHRB01AA-BOO-LF * NLOSP * /CONT-LEAK * SUR-027-R +
DG2A-GEN-LF-FTS * NLOSP * RHRH01AX-HTX-LFB * /CONT-LEAK * SUR-027-R +
DG2A-GEN-LF-FTS * RHRF48AA-VOO-LF * NLOSP * FLOW-RHR-A3 * /CONT-LEAK * SUR-027-R +

Table 3.32B

Random Failure Equations for Sequence 3A (Continued)

```
DG2A-GEN-LF-FTS * RHRC02AA-P-UUM * SCSF06AA-DENER * NLOSP * /CONT-LEAK * SUR-027-R +
DG2A-GEN-LF-FTS * NOFLOW-RHR-A1 * RHR301AX-STR * NLOSP * /CONT-LEAK * SUR-027-R +
DG2A-GEN-LF-FTS * NLOSP * CODG01P-PMS-LF * /CONT-LEAK * SUR-027-R +
DG2A-GEN-LF-FTS * NLOSP * LCSC002A-P-UUM * /CONT-LEAK * SUR-027-R +
DG2A-GEN-LF-FTS * NLOSP * RHRC02AA-PMS-LF * /CONT-LEAK * SUR-027-R.
```

Table 3.32B

Random Failure Equations for Sequence 3A (Continued)

Σ_{RAC} =
2DG01PK18CA-LFOO * CONT-LEAK * SUR-002-L +
RHRF55BX-R-UUM * CONT-LEAK * SUR-002-L +
RHRC02BB-PMS-LF * CONT-LEAK * SUR-002-L +
RHRF65BB-N-UUM * CONT-LEAK * SUR-002-L +
RHRF04BB-VOC-LF * NOFLOW-RHR-B1 * CONT-LEAK * SUR-002-L +
RHRH01BX-H-UUM * CONT-LEAK * SUR-002-L +
RHRH01BX-HTX-LFB * CONT-LEAK * SUR-002-L +
1EDC2DEP-FROP-4 * EE-C2DG01F-PLG * CONT-LEAK * SUR-002-L +
RHRF48BB-VOO-LF * FLOW-RHR-B3 * CONT-LEAK * SUR-002-L +
C2DG01P-PMS-LF * CONT-LEAK * SUR-002-L +
C2DG01P-PMS-CC * CONT-LEAK * SUR-002-L +
CSCD300B-S-UUM * CONT-LEAK * SUR-002-L +
RHRC02BB-P-NDUUM * CONT-LEAK * SUR-002-L +
SEVB001X-BCO-LF * CONT-LEAK * SUR-002-L +
RHRF74BB-V-UUM * CONT-LEAK * SUR-002-L +
CCB2DG1P-BCO-LF * CONT-LEAK * SUR-002-L +
2DG1PK18-ROO-LFO * CONT-LEAK * SUR-002-L +
RHRF88BX-R-UUM * SCSF06BB-DENER * CONT-LEAK * SUR-002-L +
1EB36XB-BCO-LF * CONT-LEAK * SUR-002-L +
CSCF068B-V-UUM * CONT-LEAK * SUR-002-L +
1EDC2DEP-FROP-4 * EE-CSCD300B-PLG * CONT-LEAK * SUR-002-L +
SCSF06BB-V-UUM * CONT-LEAK * SUR-002-L +
RHRC003B-P-UUM * CONT-LEAK * SUR-002-L +
2DG01PSC-OOO-LFO * CONT-LEAK * SUR-002-L +
C2DG01F-S-UUM * CONT-LEAK * SUR-002-L +
CSCD300B-PLG-LF * CONT-LEAK * SUR-002-L +
RHRB01BB-BOO-LF * CONT-LEAK * SUR-002-L +
RHRF48BB-V-UUM * FLOW-RHR-B3 * CONT-LEAK * SUR-002-L +
CSCF068B-VCC-LF * CONT-LEAK * SUR-002-L +
RHRF51BB-N-UUM * CONT-LEAK * SUR-002-L +
RHRF60BB-S-UUM * CONT-LEAK * SUR-002-L +

Table 3.32B

Random Failure Equations for Sequence 3A (Continued)

1EB36Y1X-BCO-LF * CONT-LEAK * SUR-002-L +
1EB16212-BCO * CONT-LEAK * SUR-002-L +
RHRC02BB-P-UUM * SCSF06BB-DENER * CONT-LEAK * SUR-002-L +
C2DGF002-CCC-LF * CONT-LEAK * SUR-002-L +
RHRF64BB-V-UUM * SCSF06BB-DENER * CONT-LEAK * SUR-002-L +
RHRF47BB-VOC-LF * CONT-LEAK * SUR-002-L +
NOFLOW-RHR-B1 * RHR301BX-STR * CONT-LEAK * SUR-002-L +
SEVY03AX-ACX-LFI * CONT-LEAK * SUR-002-L +
1EB212YX-BCO-LF * CONT-LEAK * SUR-002-L +
SEVY03CB-F-UUM * CONT-LEAK * SUR-002-L +
SEVY03CB-FMS-LF * CONT-LEAK * SUR-002-L +
SEVY03AX-A-UUM * CONT-LEAK * SUR-002-L +
RHRF03BB-VOC-LF * CONT-LEAK * SUR-002-L +
RHRB03BX-BCO-LF * FLOW-RHR-B3 * CONT-LEAK * SUR-002-L +
LPCI-PMS-CM * LPCI-BETA * CONT-LEAK * SUR-002-L +
LPCI-MOV-BETA * LPCI-MOV-CM1 * CONT-LEAK * SUR-002-L +
LPCI-MOV-BETA * LPCI-MOV-CM2 * CONT-LEAK * SUR-002-L +
RHRF47BB-V-UUM * SCSF06BB-DENER * CONT-LEAK * SUR-002-L +
RHRF98BX-XOC-LF * CONT-LEAK * SUR-002-L +
1EB2Y22X-BCO * CONT-LEAK * SUR-002-L +
C2DG01P-P-UUM * CONT-LEAK * SUR-002-L +
1EB236B-BCO-LF * CONT-LEAK * SUR-002-L +
RHRB01BB-BOO-CC * CONT-LEAK * SUR-002-L +
RHRF31BX-CCC-LF * CONT-LEAK * SUR-002-L +
C2DG01F-PLG-LF * CONT-LEAK * SUR-002-L +
RHRF87BB-V-UUM * CONT-LEAK * SUR-002-L +
1EB36YB-BCO-LF * CONT-LEAK * SUR-002-L +
CSCB068X-BCO-LF * CONT-LEAK * SUR-002-L +
SEVY03CB-FMS-CC * CONT-LEAK * SUR-002-L +
2DG01PK18CA-LFOO * /CONT-LEAK * SUR-027-R +
RHRF55BX-R-UUM * /CONT-LEAK * SUR-027-R +
RHRC02BB-PMS-LF * /CONT-LEAK * SUR-027-R +

Table 3.32B

Random Failure Equations for Sequence 3A (Continued)

```
RHRF65BB-N-UUM * /CONT-LEAK * SUR-027-R +
RHRF04BB-VOC-LF * NOFLOW-RHR-B1 * /CONT-LEAK * SUR-027-R +
RHRH01BX-H-UUM * /CONT-LEAK * SUR-027-R +
RHRH01BX-HTX-LFB * /CONT-LEAK * SUR-027-R +
1EDC2DEP-FROP-4 * EE-C2DG01F-PLG * /CONT-LEAK * SUR-027-R +
RHRF48BB-VOO-LF * FLOW-RHR-B3 * /CONT-LEAK * SUR-027-R +
C2DG01P-PMS-LF * /CONT-LEAK * SUR-027-R +
C2DG01P-PMS-CC * /CONT-LEAK * SUR-027-R +
CSCD300B-S-UUM * /CONT-LEAK * SUR-027-R +
RHRC02BB-P-NDUUM * /CONT-LEAK * SUR-027-R +
SEVB001X-BCO-LF * /CONT-LEAK * SUR-027-R +
RHRF74BB-V-UUM * /CONT-LEAK * SUR-027-R +
CCB2DG1P-BCO-LF * /CONT-LEAK * SUR-027-R +
2DG1PK18-ROO-LFO * /CONT-LEAK * SUR-027-R +
RHRF88BX-R-UUM * SCSF06BB-DENER * /CONT-LEAK * SUR-027-R +
1EB36XB-BCO-LF * /CONT-LEAK * SUR-027-R +
CSCF068B-V-UUM * /CONT-LEAK * SUR-027-R +
1EDC2DEP-FROP-4 * EE-CSCD300B-PLG * /CONT-LEAK * SUR-027-R +
SCSF06BB-V-UUM * /CONT-LEAK * SUR-027-R +
RHRC003B-P-UUM * /CONT-LEAK * SUR-027-R +
2DG01PSC-OOO-LFO * /CONT-LEAK * SUR-027-R +
C2DG01F-S-UUM * /CONT-LEAK * SUR-027-R +
CSCD300B-PLG-LF * /CONT-LEAK * SUR-027-R +
RHRB01BB-BOO-LF * /CONT-LEAK * SUR-027-R +
RHRF48BB-V-UUM * FLOW-RHR-B3 * /CONT-LEAK * SUR-027-R +
CSCF068B-VCC-LF * /CONT-LEAK * SUR-027-R +
RHRF51BB-N-UUM * /CONT-LEAK * SUR-027-R +
RHRF60BB-S-UUM * /CONT-LEAK * SUR-027-R +
1EB36Y1X-BCO-LF * /CONT-LEAK * SUR-027-R +
1EB16212-BCO * /CONT-LEAK * SUR-027-R +
RHRC02BB-P-UUM * SCSF06BB-DENER * /CONT-LEAK * SUR-027-R +
C2DGF002-CCC-LF * /CONT-LEAK * SUR-027-R +
```

Table 3.32B

Random Failure Equations for Sequence 3A (Continued)

```
RHRF64BB-V-UUM * SCSF06BB-DENER * /CONT-LEAK * SUR-027-R +
RHRF47BB-VOC-LF * /CONT-LEAK * SUR-027-R +
NOFLOW-RHR-B1 * RHR301BX-STR * /CONT-LEAK * SUR-027-R +
SEVY03AX-ACX-LFI * /CONT-LEAK * SUR-027-R +
1EB212YX-BCO-LF * /CONT-LEAK * SUR-027-R +
SEVY03CB-F-UUM * /CONT-LEAK * SUR-027-R +
SEVY03CB-FMS-LF * /CONT-LEAK * SUR-027-R +
SEVY03AX-A-UUM * /CONT-LEAK * SUR-027-R +
RHRF03BB-VOC-LF * /CONT-LEAK * SUR-027-R +
RHRB03BX-BCO-LF * FLOW-RHR-B3 * /CONT-LEAK * SUR-027-R +
LPCI-PMS-CM * LPCI-BETA * /CONT-LEAK * SUR-027-R +
LPCI-MOV-BETA * LPCI-MOV-CM1 * /CONT-LEAK * SUR-027-R +
LPCI-MOV-BETA * LPCI-MOV-CM2 * /CONT-LEAK * SUR-027-R +
RHRF47BB-V-UUM * SCSF06BB-DENER * /CONT-LEAK * SUR-027-R +
RHRF98BX-XOC-LF * /CONT-LEAK * SUR-027-R +
1EB2Y22X-BCO * /CONT-LEAK * SUR-027-R +
C2DG01P-P-UUM * /CONT-LEAK * SUR-027-R +
1EB236B-BCO-LF * /CONT-LEAK * SUR-027-R +
RHRB01BB-BOO-CC * /CONT-LEAK * SUR-027-R +
RHRF31BX-CCC-LF * /CONT-LEAK * SUR-027-R +
C2DG01F-PLG-LF * /CONT-LEAK * SUR-027-R +
RHRF87BB-V-UUM * /CONT-LEAK * SUR-027-R +
1EB36YB-BCO-LF * /CONT-LEAK * SUR-027-R +
CSCB068X-BCO-LF * /CONT-LEAK * SUR-027-R +
SEVY03CB-FMS-CC * /CONT-LEAK * SUR-027-R.
```

Table 3.32B

Random Failure Equations for Sequence 3A (Continued)

Σ_{RE3A} =
1EB235A-BCO-LF * CONT-LEAK * SUR-002-L +
1EB236B-BCO-LF * CONT-LEAK * SUR-002-L +
1EB36YB-BCO-LF * CONT-LEAK * SUR-002-L +
1EB35Y1X-BCO-LF * CONT-LEAK * SUR-002-L +
1EB235YA-BCO-LF * CONT-LEAK * SUR-002-L +
1EB36Y2X-BCO-LF * CONT-LEAK * SUR-002-L +
OPFAIL-VENT-2H * CONT-LEAK * SUR-002-L +
1EB235A-BCO-LF * /CONT-LEAK * SUR-027-R +
1EB236B-BCO-LF * /CONT-LEAK * SUR-027-R +
1EB36YB-BCO-LF * /CONT-LEAK * SUR-027-R +
1EB35Y1X-BCO-LF * /CONT-LEAK * SUR-027-R +
1EB235YA-BCO-LF * /CONT-LEAK * SUR-027-R +
1EB36Y2X-BCO-LF * /CONT-LEAK * SUR-027-R +
OPFAIL-VENT-2H * CONT-LEAK * SUR-027-R +
/OPFAIL-VENT-2H * SUR-007-V.

Table 3.32B

Random Failure Equations for Sequence 3A (Continued)

Σ_{RN} =

RHRH01AX-HTX-LFB * CONT-LEAK * SUR-002-L +
RHRF98AX-XOC-LF * CONT-LEAK * SUR-002-L +
RHRC02AA-P-NDUUM * CONT-LEAK * SUR-002-L +
RHRH01AX-H-UUM * CONT-LEAK * SUR-002-L +
NWVB001X-BCO-LF * CONT-LEAK * SUR-002-L +
NOFLOW-RHR-A1 * RHR301AX-STR * CONT-LEAK * SUR-002-L +
NWVY01CA-FMS-LF * CONT-LEAK * SUR-002-L +
C0DG01F-PLG-LF * CONT-LEAK * SUR-002-L +
RHRF48AA-V-UUM * FLOW-RHR-A3 * CONT-LEAK * SUR-002-L +
C0DG01P-P-UUM * CONT-LEAK * SUR-002-L +
RHRF03AA-VOC-LF * CONT-LEAK * SUR-002-L +
CSCD300A-S-UUM * CONT-LEAK * SUR-002-L +
RHRF31AX-CCC-LF * CONT-LEAK * SUR-002-L +
RHRF64AA-V-UUM * SCSF06AA-DENER * CONT-LEAK * SUR-002-L +
1EB211YX-BCO-LF * CONT-LEAK * SUR-002-L +
RHRC02AA-PMS-LF * CONT-LEAK * SUR-002-L +
RHRF74AA-V-UUM * CONT-LEAK * SUR-002-L +
RHRB01AA-BOO-CC * CONT-LEAK * SUR-002-L +
NWVY01CA-FMS-CC * CONT-LEAK * SUR-002-L +
RHRB01AA-BOO-LF * CONT-LEAK * SUR-002-L +
CCB0DG1P-BCO-LF * CONT-LEAK * SUR-002-L +
SCSF06AA-V-UUM * CONT-LEAK * SUR-002-L +
1EB1Y22X-BCO * CONT-LEAK * SUR-002-L +
RHRF04AA-VOC-LF * NOFLOW-RHR-A1 * CONT-LEAK * SUR-002-L +
RHRC02AA-P-UUM * SCSF06AA-DENER * CONT-LEAK * SUR-002-L +
1EB235XA-BCO-LF * CONT-LEAK * SUR-002-L +
C0DG01P-PMS-CC * CONT-LEAK * SUR-002-L +
RHRF55AX-R-UUM * CONT-LEAK * SUR-002-L +
CSCF068A-VCC-LF * CONT-LEAK * SUR-002-L +
CCBF068A-BCO-LF * CONT-LEAK * SUR-002-L +
NWVY01AX-ACX-LFI * CONT-LEAK * SUR-002-L +

Table 3.32B

Random Failure Equations for Sequence 3A (Continued)

```
RHRB03AX-BCO-LF * FLOW-RHR-A3 * CONT-LEAK * SUR-002-L +
C0DG002-CCC-LF * CONT-LEAK * SUR-002-L +
1EB235A-BCO-LF * CONT-LEAK * SUR-002-L +
1EB35Y2X-BCO-LF * CONT-LEAK * SUR-002-L +
C0DG01F-S-UUM * CONT-LEAK * SUR-002-L +
NWVY01CA-F-UUM * CONT-LEAK * SUR-002-L +
PC02AAAX-AOO-LFO * CONT-LEAK * SUR-002-L +
1EB235YA-BCO-LF * CONT-LEAK * SUR-002-L +
NWVY01AX-A-UUM * CONT-LEAK * SUR-002-L +
RHRF65AA-N-UUM * CONT-LEAK * SUR-002-L +
EE-CSCD300A-PLG * CONT-LEAK * SUR-002-L +
LPCI-PMS-CM * LPCI-BETA * CONT-LEAK * SUR-002-L +
LPCI-MOV-BETA * LPCI-MOV-CM1 * CONT-LEAK * SUR-002-L +
LPCI-MOV-BETA * LPCI-MOV-CM2 * CONT-LEAK * SUR-002-L +
CSCF008A-V-UUM * CONT-LEAK * SUR-002-L +
RHRF47AA-VOC-LF * CONT-LEAK * SUR-002-L +
1EB16211-BCO * CONT-LEAK * SUR-002-L +
RHRF87AA-V-UUM * CONT-LEAK * SUR-002-L +
RHRF60AA-S-UUM * CONT-LEAK * SUR-002-L +
RHRF51AA-N-UUM * CONT-LEAK * SUR-002-L +
RHRF47AA-V-UUM * SCSF06AA-DENER * CONT-LEAK * SUR-002-L +
RHRF48AA-VOO-LF * FLOW-RHR-A3 * CONT-LEAK * SUR-002-L +
C0DG01P-PMS-LF * CONT-LEAK * SUR-002-L +
LCSC002A-P-UUM * CONT-LEAK * SUR-002-L +
CSCD300A-PLG-LF * CONT-LEAK * SUR-002-L +
RHRF88AX-R-UUM * SCSF06AA-DENER * CONT-LEAK * SUR-002-L +
RHRH01AX-HTX-LFB * /CONT-LEAK * SUR-027-R +
RHRF98AX-XOC-LF * /CONT-LEAK * SUR-027-R +
RHRC02AA-P-NDUUM * /CONT-LEAK * SUR-027-R +
RHRH01AX-H-UUM * /CONT-LEAK * SUR-027-R +
NWVB001X-BCO-LF * /CONT-LEAK * SUR-027-R +
NOFLOW-RHR-A1 * RHR301AX-STR * /CONT-LEAK * SUR-027-R +
```

Table 3.32B

Random Failure Equations for Sequence 3A (Continued)

```
NWVY01CA-FMS-LF * /CONT-LEAK * SUR-027-R +
C0DG01F-PLG-LF * /CONT-LEAK * SUR-027-R +
RHRF48AA-V-UUM * FLOW-RHR-A3 * /CONT-LEAK * SUR-027-R +
C0DG01P-P-UUM * /CONT-LEAK * SUR-027-R +
RHRF03AA-VOC-LF * /CONT-LEAK * SUR-027-R +
CSCD300A-S-UUM * /CONT-LEAK * SUR-027-R +
RHRF31AX-CCC-LF * /CONT-LEAK * SUR-027-R +
RHRF64AA-V-UUM * SCSF06AA-DENER * /CONT-LEAK * SUR-027-R +
1EB211YX-BCO-LF * /CONT-LEAK * SUR-027-R +
RHRC02AA-PMS-LF * /CONT-LEAK * SUR-027-R +
RHRF74AA-V-UUM * /CONT-LEAK * SUR-027-R +
RHRB01AA-BOO-CC * /CONT-LEAK * SUR-027-R +
NWVY01CA-FMS-CC * /CONT-LEAK * SUR-027-R +
RHRB01AA-BOO-LF * /CONT-LEAK * SUR-027-R +
CCB0DG1P-BCO-LF * /CONT-LEAK * SUR-027-R +
SCSF06AA-V-UUM * /CONT-LEAK * SUR-027-R +
1EB1Y22X-BCO * /CONT-LEAK * SUR-027-R +
RHRF04AA-VOC-LF * NOFLOW-RHR-A1 * /CONT-LEAK * SUR-027-R +
RHRC02AA-P-UUM * SCSF06AA-DENER * /CONT-LEAK * SUR-027-R +
1EB235XA-BCO-LF * /CONT-LEAK * SUR-027-R +
C0DG01P-PMS-CC * /CONT-LEAK * SUR-027-R +
RHRF55AX-R-UUM * /CONT-LEAK * SUR-027-R +
CSCF068A-VCC-LF * /CONT-LEAK * SUR-027-R +
CCBF068A-BCO-LF * /CONT-LEAK * SUR-027-R +
NWVY01AX-ACX-LFI * /CONT-LEAK * SUR-027-R +
RHRB03AX-BCO-LF * FLOW-RHR-A3 * /CONT-LEAK * SUR-027-R +
C0DG002-CCC-LF * /CONT-LEAK * SUR-027-R +
1EB235A-BCO-LF * /CONT-LEAK * SUR-027-R +
1EB35Y2X-BCO-LF * /CONT-LEAK * SUR-027-R +
C0DG01F-S-UUM * /CONT-LEAK * SUR-027-R +
NWVY01CA-F-UUM * /CONT-LEAK * SUR-027-R +
PC02AAAX-AOO-LFO * /CONT-LEAK * SUR-027-R +
```

Table 3.32B

Random Failure Equations for Sequence 3A (Continued)

```
1EB235YA-BCO-LF * /CONT-LEAK * SUR-027-R +
NWVY01AX-A-UUM * /CONT-LEAK * SUR-027-R +
RHRF65AA-N-UUM * /CONT-LEAK * SUR-027-R +
EE-CSCD300A-PLG * /CONT-LEAK * SUR-027-R +
LPCI-PMS-CM * LPCI-BETA * /CONT-LEAK * SUR-027-R +
LPCI-MOV-BETA * LPCI-MOV-CM1 * /CONT-LEAK * SUR-027-R +
LPCI-MOV-BETA * LPCI-MOV-CM2 * /CONT-LEAK * SUR-027-R +
CSCF008A-V-UUM * /CONT-LEAK * SUR-027-R +
RHRF47AA-VOC-LF * /CONT-LEAK * SUR-027-R +
1EB16211-BCO * /CONT-LEAK * SUR-027-R +
RHRF87AA-V-UUM * /CONT-LEAK * SUR-027-R +
RHRF60AA-S-UUM * /CONT-LEAK * SUR-027-R +
RHRF51AA-N-UUM * /CONT-LEAK * SUR-027-R +
RHRF47AA-V-UUM * SCSF06AA-DENER * /CONT-LEAK * SUR-027-R +
RHRF48AA-VOO-LF * FLOW-RHR-A3 * /CONT-LEAK * SUR-027-R +
CODG01P-PMS-LF * /CONT-LEAK * SUR-027-R +
LCSC002A-P-UUM * /CONT-LEAK * SUR-027-R +
CSCD300A-PLG-LF * /CONT-LEAK * SUR-027-R +
RHRF88AX-R-UUM * SCSF06AA-DENER * /CONT-LEAK * SUR-027-R.
```

Table 3.32B

Random Failure Equations for Sequence 3A (Continued)

Σ_{RP} =
SEVY03CB-FMS-CC * CONT-LEAK * SUR-002-L +
RHRF47BB-V-UUM * SCSF06BB-DENER * CONT-LEAK * SUR-002-L +
RHRF98BX-XOC-LF * CONT-LEAK * SUR-002-L +
RHRF51BB-N-UUM * CONT-LEAK * SUR-002-L +
RHRF55BX-R-UUM * CONT-LEAK * SUR-002-L +
2DG1PK18-ROO-LFO * CONT-LEAK * SUR-002-L +
RHRH01BX-H-UUM * CONT-LEAK * SUR-002-L +
RHRF60BB-S-UUM * CONT-LEAK * SUR-002-L +
SEVY03AX-A-UUM * CONT-LEAK * SUR-002-L +
CSCD300B-S-UUM * CONT-LEAK * SUR-002-L +
RHRB01BB-BOO-LF * CONT-LEAK * SUR-002-L +
RHRF48BB-VOO-LF * FLOW-RHR-B3 * CONT-LEAK * SUR-002-L +
SEVY03AX-ACX-LFI * CONT-LEAK * SUR-002-L +
C2DG01F-PLG-LF * CONT-LEAK * SUR-002-L +
RHRH01BX-HTX-LFB * CONT-LEAK * SUR-002-L +
RHRF31BX-CCC-LF * CONT-LEAK * SUR-002-L +
C2DGF002-CCC-LF * CONT-LEAK * SUR-002-L +
RHRB03BX-BCO-LF * FLOW-RHR-B3 * CONT-LEAK * SUR-002-L +
LPCI-PMS-CM * LPCI-BETA * CONT-LEAK * SUR-002-L +
LPCI-MOV-BETA * LPCI-MOV-CM1 * CONT-LEAK * SUR-002-L +
LPCI-MOV-BETA * LPCI-MOV-CM2 * CONT-LEAK * SUR-002-L +
2DG01PK18CA-LFOO * CONT-LEAK * SUR-002-L +
NOFLOW-RHR-B1 * RHR301BX-STR * CONT-LEAK * SUR-002-L +
RHRF74BB-V-UUM * CONT-LEAK * SUR-002-L +
RHRF64BB-V-UUM * SCSF06BB-DENER * CONT-LEAK * SUR-002-L +
1EB36XB-BCO-LF * CONT-LEAK * SUR-002-L +
RHRF48BB-V-UUM * FLOW-RHR-B3 * CONT-LEAK * SUR-002-L +
SEVY03CB-FMS-LF * CONT-LEAK * SUR-002-L +
CSCF068B-V-UUM * CONT-LEAK * SUR-002-L +
RHRF03BB-VOC-LF * CONT-LEAK * SUR-002-L +
SCSF06BB-V-UUM * CONT-LEAK * SUR-002-L +

Table 3.32B

Random Failure Equations for Sequence 3A (Continued)

```
RHRC003B-P-UUM * CONT-LEAK * SUR-002-L +
CSCB068X-BCO-LF * CONT-LEAK * SUR-002-L +
1EDC2DEP-FROP-4 * EE-CSCD300B-PLG * CONT-LEAK * SUR-002-L +
1EB236B-BCO-LF * CONT-LEAK * SUR-002-L +
RHRC02BB-P-UUM * SCSF06BB-DENER * CONT-LEAK * SUR-002-L +
RHRF47BB-VOC-LF * CONT-LEAK * SUR-002-L +
1EB36YB-BCO-LF * CONT-LEAK * SUR-002-L +
SEVB001X-BCO-LF * CONT-LEAK * SUR-002-L +
C2DG01F-S-UUM * CONT-LEAK * SUR-002-L +
CCB2DG1P-BCO-LF * CONT-LEAK * SUR-002-L +
RHRC02BB-PMS-LF * CONT-LEAK * SUR-002-L +
RHRF65BB-N-UUM * CONT-LEAK * SUR-002-L +
2DG01PSC-OOO-LFO * CONT-LEAK * SUR-002-L +
RHRF04BB-VOC-LF * NOFLOW-RHR-B1 * CONT-LEAK * SUR-002-L +
RHRF88BX-R-UUM * SCSF06BB-DENER * CONT-LEAK * SUR-002-L +
CSCF068B-VCC-LF * CONT-LEAK * SUR-002-L +
1EB36Y1X-BCO-LF * CONT-LEAK * SUR-002-L +
CSCD300B-PLG-LF * CONT-LEAK * SUR-002-L +
1EB16212-BCO * CONT-LEAK * SUR-002-L +
C2DG01P-PMS-CC * CONT-LEAK * SUR-002-L +
SEVY03CB-F-UUM * CONT-LEAK * SUR-002-L +
C2DG01P-PMS-LF * CONT-LEAK * SUR-002-L +
C2DG01P-P-UUM * CONT-LEAK * SUR-002-L +
1EDC2DEP-FROP-4 * EE-C2DG01F-PLG * CONT-LEAK * SUR-002-L +
RHRC02BB-P-NDUUM * CONT-LEAK * SUR-002-L +
1EB212YX-BCO-LF * CONT-LEAK * SUR-002-L +
RHRB01BB-BOO-CC * CONT-LEAK * SUR-002-L +
RHRF87BB-V-UUM * CONT-LEAK * SUR-002-L +
1EB2Y22X-BCO * CONT-LEAK * SUR-002-L +
SEVY03CB-FMS-CC * /CONT-LEAK * SUR-027-R +
RHRF47BB-V-UUM * SCSF06BB-DENER * /CONT-LEAK * SUR-027-R +
RHRF98BX-XOC-LF * /CONT-LEAK * SUR-027-R +
```

Table 3.32B

Random Failure Equations for Sequence 3A (Continued)

```
RHRF51BB-N-UUM * /CONT-LEAK * SUR-027-R +
RHRF55BX-R-UUM * /CONT-LEAK * SUR-027-R +
2DG1PK18-ROO-LFO * /CONT-LEAK * SUR-027-R +
RHRH01BX-H-UUM * /CONT-LEAK * SUR-027-R +
RHRF60BB-S-UUM * /CONT-LEAK * SUR-027-R +
SEVY03AX-A-UUM * /CONT-LEAK * SUR-027-R +
CSCD300B-S-UUM * /CONT-LEAK * SUR-027-R +
RHRB01BB-BOO-LF * /CONT-LEAK * SUR-027-R +
RHRF48BB-VOO-LF * FLOW-RHR-B3 * /CONT-LEAK * SUR-027-R +
SEVY03AX-ACX-LFI * /CONT-LEAK * SUR-027-R +
C2DG01F-PLG-LF * /CONT-LEAK * SUR-027-R +
RHRH01BX-HTX-LFB * /CONT-LEAK * SUR-027-R +
RHRF31BX-CCC-LF * /CONT-LEAK * SUR-027-R +
C2DGF002-CCC-LF * /CONT-LEAK * SUR-027-R +
RHRB03BX-BCO-LF * FLOW-RHR-B3 * /CONT-LEAK * SUR-027-R +
LPCI-PMS-CM * LPCI-BETA * /CONT-LEAK * SUR-027-R +
LPCI-MOV-BETA * LPCI-MOV-CM1 * /CONT-LEAK * SUR-027-R +
LPCI-MOV-BETA * LPCI-MOV-CM2 * /CONT-LEAK * SUR-027-R +
2DG01PK18CA-LFOO * /CONT-LEAK * SUR-027-R +
NOFLOW-RHR-B1 * RHR301BX-STR * /CONT-LEAK * SUR-027-R +
RHRF74BB-V-UUM * /CONT-LEAK * SUR-027-R +
RHRF64BB-V-UUM * SCSF06BB-DENER * /CONT-LEAK * SUR-027-R +
1EB36XB-BCO-LF * /CONT-LEAK * SUR-027-R +
RHRF48BB-V-UUM * FLOW-RHR-B3 * /CONT-LEAK * SUR-027-R +
SEVY03CB-FMS-LF * /CONT-LEAK * SUR-027-R +
CSCF068B-V-UUM * /CONT-LEAK * SUR-027-R +
RHRF03BB-VOC-LF * /CONT-LEAK * SUR-027-R +
SCSF06BB-V-UUM * /CONT-LEAK * SUR-027-R +
RHRC003B-P-UUM * /CONT-LEAK * SUR-027-R +
CSCB068X-BCO-LF * /CONT-LEAK * SUR-027-R +
1EDC2DEP-FROP-4 * EE-CSCD300B-PLG * /CONT-LEAK * SUR-027-R +
1EB236B-BCO-LF * /CONT-LEAK * SUR-027-R +
```

Table 3.32B

Random Failure Equations for Sequence 3A (Continued)

```
RHRC02BB-P-UUM * SCSF06BB-DENER * /CONT-LEAK * SUR-027-R +
RHRF47BB-VOC-LF * /CONT-LEAK * SUR-027-R +
1EB36YB-BCO-LF * /CONT-LEAK * SUR-027-R +
SEVB001X-BCO-LF * /CONT-LEAK * SUR-027-R +
C2DG01F-S-UUM * /CONT-LEAK * SUR-027-R +
CCB2DG1P-BCO-LF * /CONT-LEAK * SUR-027-R +
RHRC02BB-PMS-LF * /CONT-LEAK * SUR-027-R +
RHRF65BB-N-UUM * /CONT-LEAK * SUR-027-R +
2DG01PSC-OOO-LFO * /CONT-LEAK * SUR-027-R +
RHRF04BB-VOC-LF * NOFLOW-RHR-B1 * /CONT-LEAK * SUR-027-R +
RHRF88BX-R-UUM * SCSF06BB-DENER * /CONT-LEAK * SUR-027-R +
CSCF068B-VCC-LF * /CONT-LEAK * SUR-027-R +
1EB36Y1X-BCO-LF * /CONT-LEAK * SUR-027-R +
CSCD300B-PLG-LF * /CONT-LEAK * SUR-027-R +
1EB16212-BCO * /CONT-LEAK * SUR-027-R +
C2DG01P-PMS-CC * /CONT-LEAK * SUR-027-R +
SEVY03CB-F-UUM * /CONT-LEAK * SUR-027-R +
C2DG01P-PMS-LF * /CONT-LEAK * SUR-027-R +
C2DG01P-P-UUM * /CONT-LEAK * SUR-027-R +
1EDC2DEP-FROP-4 * EE-C2DG01F-PLG * /CONT-LEAK * SUR-027-R +
RHRC02BB-P-NDUUM * /CONT-LEAK * SUR-027-R +
1EB212YX-BCO-LF * /CONT-LEAK * SUR-027-R +
RHRB01BB-BOO-CC * /CONT-LEAK * SUR-027-R +
RHRF87BB-V-UUM * /CONT-LEAK * SUR-027-R +
1EB2Y22X-BCO * /CONT-LEAK * SUR-027-R.
```

Table 3.32B

Random Failure Equations for Sequence 3A (Continued)

$\Sigma_{RS(AA)}$ =
CSCF068A-VCC-LF * DG2A-GEN-LF-FTR * NLOSP * CONT-LEAK * SUR-002-L +
DG2A-GEN-LF-FTR * RHRB01AA-BOO-LF * NLOSP * CONT-LEAK * SUR-002-L +
DG2A-GEN-LF-FTR * NLOSP * RHRH01AX-HTX-LFB * CONT-LEAK * SUR-002-L +
DG2A-GEN-LF-FTR * RHRF48AA-VOO-LF * NLOSP * FLOW-RHR-A3 * CONT-LEAK * SUR-002-L +
DG2A-GEN-LF-FTR * RHRC02AA-P-UUM * SCSF06AA-DENER * NLOSP * CONT-LEAK * SUR-002-L +
DG2A-GEN-LF-FTR * NOFLOW-RHR-A1 * RHR301AX-STR * NLOSP * CONT-LEAK * SUR-002-L +
DG2A-GEN-LF-FTR * NLOSP * CODG01P-PMS-LF * CONT-LEAK * SUR-002-L +
DG2A-GEN-LF-FTR * NLOSP * LCSC002A-P-UUM * CONT-LEAK * SUR-002-L +
DG2A-GEN-LF-FTR * NLOSP * RHRC02AA-PMS-LF * CONT-LEAK * SUR-002-L +
CSCF068A-VCC-LF * DG2A-GEN-LF-FTS * NLOSP * CONT-LEAK * SUR-002-L +
DG2A-GEN-LF-FTS * RHRB01AA-BOO-LF * NLOSP * CONT-LEAK * SUR-002-L +
DG2A-GEN-LF-FTS * NLOSP * RHRH01AX-HTX-LFB * CONT-LEAK * SUR-002-L +
DG2A-GEN-LF-FTS * RHRF48AA-VOO-LF * NLOSP * FLOW-RHR-A3 * CONT-LEAK * SUR-002-L +
DG2A-GEN-LF-FTS * RHRC02AA-P-UUM * SCSF06AA-DENER * NLOSP * CONT-LEAK * SUR-002-L +
DG2A-GEN-LF-FTS * NOFLOW-RHR-A1 * RHR301AX-STR * NLOSP * CONT-LEAK * SUR-002-L +
DG2A-GEN-LF-FTS * NLOSP * CODG01P-PMS-LF * CONT-LEAK * SUR-002-L +
DG2A-GEN-LF-FTS * NLOSP * LCSC002A-P-UUM * CONT-LEAK * SUR-002-L +
DG2A-GEN-LF-FTS * NLOSP * RHRC02AA-PMS-LF * CONT-LEAK * SUR-002-L
CSCF068A-VCC-LF * DG2A-GEN-LF-FTR * NLOSP * /CONT-LEAK * SUR-027-R +
DG2A-GEN-LF-FTR * RHRB01AA-BOO-LF * NLOSP * /CONT-LEAK * SUR-027-R +
DG2A-GEN-LF-FTR * NLOSP * RHRH01AX-HTX-LFB * /CONT-LEAK * SUR-027-R +
DG2A-GEN-LF-FTR * RHRF48AA-VOO-LF * NLOSP * FLOW-RHR-A3 * /CONT-LEAK * SUR-027-R +
DG2A-GEN-LF-FTR * RHRC02AA-P-UUM * SCSF06AA-DENER * NLOSP * /CONT-LEAK * SUR-027-R +
DG2A-GEN-LF-FTR * NOFLOW-RHR-A1 * RHR301AX-STR * NLOSP * /CONT-LEAK * SUR-027-R +
DG2A-GEN-LF-FTR * NLOSP * CODG01P-PMS-LF * /CONT-LEAK * SUR-027-R +
DG2A-GEN-LF-FTR * NLOSP * LCSC002A-P-UUM * /CONT-LEAK * SUR-027-R +
DG2A-GEN-LF-FTR * NLOSP * RHRC02AA-PMS-LF * /CONT-LEAK * SUR-027-R +
CSCF068A-VCC-LF * DG2A-GEN-LF-FTS * NLOSP * /CONT-LEAK * SUR-027-R +
DG2A-GEN-LF-FTS * RHRB01AA-BOO-LF * NLOSP * /CONT-LEAK * SUR-027-R +
DG2A-GEN-LF-FTS * NLOSP * RHRH01AX-HTX-LFB * /CONT-LEAK * SUR-027-R +
DG2A-GEN-LF-FTS * RHRF48AA-VOO-LF * NLOSP * FLOW-RHR-A3 * /CONT-LEAK * SUR-027-R +

Table 3.32B

Random Failure Equations for Sequence 3A (Continued)

```
DG2A-GEN-LF-FTS * RHRC02AA-P-UUM * SCSF06AA-DENER * NLOSP * /CONT-LEAK * SUR-027-R +
DG2A-GEN-LF-FTS * NOFLOW-RHR-A1 * RHR301AX-STR * NLOSP * /CONT-LEAK * SUR-027-R +
DG2A-GEN-LF-FTS * NLOSP * C0DG01P-PMS-LF * /CONT-LEAK * SUR-027-R +
DG2A-GEN-LF-FTS * NLOSP * LCSC002A-P-UUM * /CONT-LEAK * SUR-027-R +
DG2A-GEN-LF-FTS * NLOSP * RHRC02AA-PMS-LF * /CONT-LEAK * SUR-027-R.
```

Table 3.32B

Random Failure Equations for Sequence 3A (Continued)

$\Sigma_{RS(W)}$ =
1EB235XA-BCO-LF * CONT-LEAK * SUR-002-L +
RHRF87AA-V-UUM * CONT-LEAK * SUR-002-L +
NWVY01AX-ACX-LFI * CONT-LEAK * SUR-002-L +
PC02AAAX-AOO-LFO * CONT-LEAK * SUR-002-L +
RHRF88AX-R-UUM * SCSF06AA-DENER * CONT-LEAK * SUR-002-L +
RHRC02AA-PMS-LF * CONT-LEAK * SUR-002-L +
RHRF47AA-VOC-LF * CONT-LEAK * SUR-002-L +
RHRF60AA-S-UUM * CONT-LEAK * SUR-002-L +
CODG01F-S-UUM * CONT-LEAK * SUR-002-L +
RHRB03AX-BCO-LF * FLOW-RHR-A3 * CONT-LEAK * SUR-002-L +
CCBF068A-BCO-LF * CONT-LEAK * SUR-002-L +
EE-CSCD300A-PLG * CONT-LEAK * SUR-002-L +
SCSF06AA-V-UUM * CONT-LEAK * SUR-002-L +
CCBODG1P-BCO-LF * CONT-LEAK * SUR-002-L +
RHRH01AX-H-UUM * CONT-LEAK * SUR-002-L +
RHRB01AA-BOO-LF * CONT-LEAK * SUR-002-L +
RHRF55AX-R-UUM * CONT-LEAK * SUR-002-L +
RHRH01AX-HTX-LFB * CONT-LEAK * SUR-002-L +
RHRF47AA-V-UUM * SCSF06AA-DENER * CONT-LEAK * SUR-002-L +
CODG002-CCC-LF * CONT-LEAK * SUR-002-L +
NWVY01AX-A-UUM * CONT-LEAK * SUR-002-L +
CODG01P-PMS-LF * CONT-LEAK * SUR-002-L +
1EB1Y22X-BCO * CONT-LEAK * SUR-002-L +
CODG01P-P-UUM * CONT-LEAK * SUR-002-L +
RHRF03AA-VOC-LF * CONT-LEAK * SUR-002-L +
RHRF31AX-CCC-LF * CONT-LEAK * SUR-002-L +
RHRF74AA-V-UUM * CONT-LEAK * SUR-002-L +
RHRF65AA-N-UUM * CONT-LEAK * SUR-002-L +
LCSC002A-P-UUM * CONT-LEAK * SUR-002-L +
CSCF068A-VCC-LF * CONT-LEAK * SUR-002-L +
RHRF64AA-V-UUM * SCSF06AA-DENER * CONT-LEAK * SUR-002-L +

Table 3.32B

Random Failure Equations for Sequence 3A (Continued)

```
RHRC02AA-P-NDUUM * CONT-LEAK * SUR-002-L +
CSCD300A-S-UUM * CONT-LEAK * SUR-002-L +
C0DG01F-PLG-LF * CONT-LEAK * SUR-002-L +
1EB211YX-BCO-LF * CONT-LEAK * SUR-002-L +
RHRF48AA-V-UUM * FLOW-RHR-A3 * CONT-LEAK * SUR-002-L +
1EB235YA-BCO-LF * CONT-LEAK * SUR-002-L +
RHRF51AA-N-UUM * CONT-LEAK * SUR-002-L +
1EB235A-BCO-LF * CONT-LEAK * SUR-002-L +
NWVY01CA-FMS-LF * CONT-LEAK * SUR-002-L +
CSCF008A-V-UUM * CONT-LEAK * SUR-002-L +
NWVY01CA-FMS-CC * CONT-LEAK * SUR-002-L +
RHRF48AA-VOO-LF * FLOW-RHR-A3 * CONT-LEAK * SUR-002-L +
NWVB001X-BCO-LF * CONT-LEAK * SUR-002-L +
C0DG01P-PMS-CC * CONT-LEAK * SUR-002-L +
LPCI-PMS-CM * LPCI-BETA * CONT-LEAK * SUR-002-L +
LPCI-MOV-BETA * LPCI-MOV-CM1 * CONT-LEAK * SUR-002-L +
LPCI-MOV-BETA * LPCI-MOV-CM2 * CONT-LEAK * SUR-002-L +
RHRB01AA-BOO-CC * CONT-LEAK * SUR-002-L +
RHRC02AA-P-UUM * SCSF06AA-DENER * CONT-LEAK * SUR-002-L +
NOFLOW-RHR-A1 * RHR301AX-STR * CONT-LEAK * SUR-002-L +
RHRF04AA-VOC-LF * NOFLOW-RHR-A1 * CONT-LEAK * SUR-002-L +
RHRF98AX-XOC-LF * CONT-LEAK * SUR-002-L +
NWVY01CA-F-UUM * CONT-LEAK * SUR-002-L +
CSCD300A-PLG-LF * CONT-LEAK * SUR-002-L +
1EB35Y2X-BCO-LF * CONT-LEAK * SUR-002-L +
1EB16211-BCO * CONT-LEAK * SUR-002-L +1EB235XA-BCO-LF * /CONT-LEAK * SUR-027-R +
RHRF87AA-V-UUM * /CONT-LEAK * SUR-027-R +
NWVY01AX-ACX-LFI * /CONT-LEAK * SUR-027-R +
PC02AAAX-AOO-LFO * /CONT-LEAK * SUR-027-R +
RHRF88AX-R-UUM * SCSF06AA-DENER * /CONT-LEAK * SUR-027-R +
RHRC02AA-PMS-LF * /CONT-LEAK * SUR-027-R +
RHRF47AA-VOC-LF * /CONT-LEAK * SUR-027-R +
```

Table 3.32B

Random Failure Equations for Sequence 3A (Continued)

```
RHRF60AA-S-UUM * /CONT-LEAK * SUR-027-R +
CODG01F-S-UUM * /CONT-LEAK * SUR-027-R +
RHRB03AX-BCO-LF * FLOW-RHR-A3 * /CONT-LEAK * SUR-027-R +
CCBF068A-BCO-LF * /CONT-LEAK * SUR-027-R +
EE-CSCD300A-PLG * /CONT-LEAK * SUR-027-R +
SCSF06AA-V-UUM * /CONT-LEAK * SUR-027-R +
CCBODG1P-BCO-LF * /CONT-LEAK * SUR-027-R +
RHRH01AX-H-UUM * /CONT-LEAK * SUR-027-R +
RHRB01AA-BOO-LF * /CONT-LEAK * SUR-027-R +
RHRF55AX-R-UUM * /CONT-LEAK * SUR-027-R +
RHRH01AX-HTX-LFB * /CONT-LEAK * SUR-027-R +
RHRF47AA-V-UUM * SCSF06AA-DENER * /CONT-LEAK * SUR-027-R +
CODG002-CCC-LF * /CONT-LEAK * SUR-027-R +
NWVY01AX-A-UUM * /CONT-LEAK * SUR-027-R +
CODG01P-PMS-LF * /CONT-LEAK * SUR-027-R +
1EB1Y22X-BCO * /CONT-LEAK * SUR-027-R +
CODG01P-P-UUM * /CONT-LEAK * SUR-027-R +
RHRF03AA-VOC-LF * /CONT-LEAK * SUR-027-R +
RHRF31AX-CCC-LF * /CONT-LEAK * SUR-027-R +
RHRF74AA-V-UUM * /CONT-LEAK * SUR-027-R +
RHRF65AA-N-UUM * /CONT-LEAK * SUR-027-R +
LCSC002A-P-UUM * /CONT-LEAK * SUR-027-R +
CSCF068A-VCC-LF * /CONT-LEAK * SUR-027-R +
RHRF64AA-V-UUM * SCSF06AA-DENER * /CONT-LEAK * SUR-027-R +
RHRC02AA-P-NDUUM * /CONT-LEAK * SUR-027-R +
CSCD300A-S-UUM * /CONT-LEAK * SUR-027-R +
CODG01F-PLG-LF * /CONT-LEAK * SUR-027-R +
1EB211YX-BCO-LF * /CONT-LEAK * SUR-027-R +
RHRF48AA-V-UUM * FLOW-RHR-A3 * /CONT-LEAK * SUR-027-R +
1EB235YA-BCO-LF * /CONT-LEAK * SUR-027-R +
RHRF51AA-N-UUM * /CONT-LEAK * SUR-027-R +
1EB235A-BCO-LF * /CONT-LEAK * SUR-027-R +
```

Table 3.32B

Random Failure Equations for Sequence 3A (Continued)

```
NWVY01CA-FMS-LF * /CONT-LEAK * SUR-027-R +
CSCF008A-V-UUM * /CONT-LEAK * SUR-027-R +
NWVY01CA-FMS-CC * /CONT-LEAK * SUR-027-R +
RHRF48AA-VOO-LF * FLOW-RHR-A3 * /CONT-LEAK * SUR-027-R +
NWVB001X-BCO-LF * /CONT-LEAK * SUR-027-R +
CODG01P-PMS-CC * /CONT-LEAK * SUR-027-R +
LPCI-PMS-CM * LPCI-BETA * /CONT-LEAK * SUR-027-R +
LPCI-MOV-BETA * LPCI-MOV-CM1 * /CONT-LEAK * SUR-027-R +
LPCI-MOV-BETA * LPCI-MOV-CM2 * /CONT-LEAK * SUR-027-R +
RHRB01AA-BOO-CC * /CONT-LEAK * SUR-027-R +
RHRC02AA-P-UUM * SCSF06AA-DENER * /CONT-LEAK * SUR-027-R +
NOFLOW-RHR-A1 * RHR301AX-STR * /CONT-LEAK * SUR-027-R +
RHRF04AA-VOC-LF * NOFLOW-RHR-A1 * /CONT-LEAK * SUR-027-R +
RHRF98AX-XOC-LF * /CONT-LEAK * SUR-027-R +
NWVY01CA-F-UUM * /CONT-LEAK * SUR-027-R +
CSCD300A-PLG-LF * /CONT-LEAK * SUR-027-R +
1EB35Y2X-BCO-LF * /CONT-LEAK * SUR-027-R +
1EB16211-BCO * /CONT-LEAK * SUR-027-R.
```

Table 3.32B

Random Failure Equations for Sequence 3A (Continued)

Σ_{RT} =
1EB36YB-BCO-LF * CONT-LEAK * SUR-002-L +
1EB236B-BCO-LF * CONT-LEAK * SUR-002-L +
CSCD300B-PLG-LF * OPFAIL-VENT-2H * CONT-LEAK * SUR-002-L +
OPFAIL-VENT-2H * C2DG01P-PMS-CC * CONT-LEAK * SUR-002-L +
RHRB01BB-BOO-LF * OPFAIL-VENT-2H * CONT-LEAK * SUR-002-L +
RHRC02BB-P-UUM * SCSF06BB-DENER * OPFAIL-VENT-2H * CONT-LEAK * SUR-002-L +
OPFAIL-VENT-2H * RHRC02BB-P-NDUUM * CONT-LEAK * SUR-002-L +
RHRF48BB-VOO-LF * OPFAIL-VENT-2H * FLOW-RHR-B3 * CONT-LEAK * SUR-002-L +
OPFAIL-VENT-2H * RHRC003B-P-UUM * CONT-LEAK * SUR-002-L +
OPFAIL-VENT-2H * RHRC02BB-PMS-LF * CONT-LEAK * SUR-002-L +
SEVY03CB-FMS-CC * OPFAIL-VENT-2H * CONT-LEAK * SUR-002-L +
OPFAIL-VENT-2H * RHRH01BX-HTX-LFB * CONT-LEAK * SUR-002-L +
OPFAIL-VENT-2H * C2DG01P-P-UUM * CONT-LEAK * SUR-002-L +
RHRF48BB-VOO-CC * OPFAIL-VENT-2H * FLOW-RHR-B3 * CONT-LEAK * SUR-002-L +
RHRB01BB-BOO-CC * OPFAIL-VENT-2H * CONT-LEAK * SUR-002-L +
OPFAIL-VENT-2H * C2DG01P-PMS-LF * CONT-LEAK * SUR-002-L +
OPFAIL-VENT-2H * C2DG01F-PLG-LF * CONT-LEAK * SUR-002-L +
CSCF068B-VCC-LF * OPFAIL-VENT-2H * CONT-LEAK * SUR-002-L +
NOFLOW-RHR-B1 * RHR301BX-STR * OPFAIL-VENT-2H * CONT-LEAK * SUR-002-L +CSCD300B-PLG-LF *
OPFAIL-VENT-2H * /CONT-LEAK * SUR-027-R +
OPFAIL-VENT-2H * C2DG01P-PMS-CC * /CONT-LEAK * SUR-027-R +
RHRB01BB-BOO-LF * OPFAIL-VENT-2H * /CONT-LEAK * SUR-027-R +
RHRC02BB-P-UUM * SCSF06BB-DENER * OPFAIL-VENT-2H * /CONT-LEAK * SUR-027-R +
OPFAIL-VENT-2H * RHRC02BB-P-NDUUM * /CONT-LEAK * SUR-027-R +
RHRF48BB-VOO-LF * OPFAIL-VENT-2H * FLOW-RHR-B3 * /CONT-LEAK * SUR-027-R +
OPFAIL-VENT-2H * RHRC003B-P-UUM * /CONT-LEAK * SUR-027-R +
OPFAIL-VENT-2H * RHRC02BB-PMS-LF * /CONT-LEAK * SUR-027-R +
SEVY03CB-FMS-CC * OPFAIL-VENT-2H * /CONT-LEAK * SUR-027-R +
OPFAIL-VENT-2H * RHRH01BX-HTX-LFB * /CONT-LEAK * SUR-027-R +
OPFAIL-VENT-2H * C2DG01P-P-UUM * /CONT-LEAK * SUR-027-R +
RHRF48BB-VOO-CC * OPFAIL-VENT-2H * FLOW-RHR-B3 * /CONT-LEAK * SUR-027-R +

Table 3.32B

Random Failure Equations for Sequence 3A (Continued)

```
RHRB01BB-BOO-CC * OPFAIL-VENT-2H * /CONT-LEAK * SUR-027-R +
OPFAIL-VENT-2H * C2DG01P-PMS-LF * /CONT-LEAK * SUR-027-R +
OPFAIL-VENT-2H * C2DG01F-PLG-LF * /CONT-LEAK * SUR-027-R +
CSCF068B-VCC-LF * OPFAIL-VENT-2H * /CONT-LEAK * SUR-027-R +
NOFLOW-RHR-B1 * RHR301BX-STR * OPFAIL-VENT-2H * /CONT-LEAK * SUR-027-R +
CSCD300B-PLG-LF * /OPFAIL-VENT-2H * SUR-007-V +
/OPFAIL-VENT-2H * C2DG01P-PMS-CC * SUR-007-V +
RHRB01BB-BOO-LF * /OPFAIL-VENT-2H * SUR-007-V +
RHRC02BB-P-UUM * SCSF06BB-DENER * /OPFAIL-VENT-2H * SUR-007-V +
/OPFAIL-VENT-2H * RHRC02BB-P-NDUUM * SUR-007-V +
RHRF48BB-VOO-LF * /OPFAIL-VENT-2H * FLOW-RHR-B3 * SUR-007-V +
/OPFAIL-VENT-2H * RHRC003B-P-UUM * SUR-007-V +
/OPFAIL-VENT-2H * RHRC02BB-PMS-LF * SUR-007-V +
SEVY03CB-FMS-CC * /OPFAIL-VENT-2H * SUR-007-V +
/OPFAIL-VENT-2H * RHRH01BX-HTX-LFB * SUR-007-V +
/OPFAIL-VENT-2H * C2DG01P-P-UUM * SUR-007-V +
RHRF48BB-VOO-CC * /OPFAIL-VENT-2H * FLOW-RHR-B3 * SUR-007-V +
RHRB01BB-BOO-CC * /OPFAIL-VENT-2H * SUR-007-V +
/OPFAIL-VENT-2H * C2DG01P-PMS-LF * SUR-007-V +
/OPFAIL-VENT-2H * C2DG01F-PLG-LF * SUR-007-V +
CSCF068B-VCC-LF * /OPFAIL-VENT-2H * SUR-007-V +
NOFLOW-RHR-B1 * RHR301BX-STR * /OPFAIL-VENT-2H * SUR-007-V.
```

Table 3.32B

Random Failure Equations for Sequence 3A (Continued)

Σ_{RW} =
1EB235XA-BCO-LF * CONT-LEAK * SUR-002-L +
RHRF87AA-V-UUM * CONT-LEAK * SUR-002-L +
NWVY01AX-ACX-LFI * CONT-LEAK * SUR-002-L +
PC02AAAX-AOO-LFO * CONT-LEAK * SUR-002-L +
RHRF88AX-R-UUM * SCSF06AA-DENER * CONT-LEAK * SUR-002-L +
RHRC02AA-PMS-LF * CONT-LEAK * SUR-002-L +
RHRF47AA-VOC-LF * CONT-LEAK * SUR-002-L +
RHRF60AA-S-UUM * CONT-LEAK * SUR-002-L +
CODG01F-S-UUM * CONT-LEAK * SUR-002-L +
RHRB03AX-BCO-LF * FLOW-RHR-A3 * CONT-LEAK * SUR-002-L +
CCBF068A-BCO-LF * CONT-LEAK * SUR-002-L +
EE-CSCD300A-PLG * CONT-LEAK * SUR-002-L +
SCSF06AA-V-UUM * CONT-LEAK * SUR-002-L +
CCBODG1P-BCO-LF * CONT-LEAK * SUR-002-L +
RHRH01AX-H-UUM * CONT-LEAK * SUR-002-L +
RHRB01AA-BOO-LF * CONT-LEAK * SUR-002-L +
RHRF55AX-R-UUM * CONT-LEAK * SUR-002-L +
RHRH01AX-HTX-LFB * CONT-LEAK * SUR-002-L +
RHRF47AA-V-UUM * SCSF06AA-DENER * CONT-LEAK * SUR-002-L +
CODG002-CCC-LF * CONT-LEAK * SUR-002-L +
NWVY01AX-A-UUM * CONT-LEAK * SUR-002-L +
CODG01P-PMS-LF * CONT-LEAK * SUR-002-L +
1EB1Y22X-BCO * CONT-LEAK * SUR-002-L +
CODG01P-P-UUM * CONT-LEAK * SUR-002-L +
RHRF03AA-VOC-LF * CONT-LEAK * SUR-002-L +
RHRF31AX-CCC-LF * CONT-LEAK * SUR-002-L +
RHRF74AA-V-UUM * CONT-LEAK * SUR-002-L +
RHRF65AA-N-UUM * CONT-LEAK * SUR-002-L +
LCSC002A-P-UUM * CONT-LEAK * SUR-002-L +
CSCF068A-VCC-LF * CONT-LEAK * SUR-002-L +
RHRF64AA-V-UUM * SCSF06AA-DENER * CONT-LEAK * SUR-002-L +

Table 3.32B

Random Failure Equations for Sequence 3A (Continued)

```
RHRC02AA-P-NDUUM * CONT-LEAK * SUR-002-L +
CSCD300A-S-UUM * CONT-LEAK * SUR-002-L +
C0DG01F-PLG-LF * CONT-LEAK * SUR-002-L +
1EB211YX-BCO-LF * CONT-LEAK * SUR-002-L +
RHRF48AA-V-UUM * FLOW-RHR-A3 * CONT-LEAK * SUR-002-L +
1EB235YA-BCO-LF * CONT-LEAK * SUR-002-L +
RHRF51AA-N-UUM * CONT-LEAK * SUR-002-L +
1EB235A-BCO-LF * CONT-LEAK * SUR-002-L +
NWVY01CA-FMS-LF * CONT-LEAK * SUR-002-L +
CSCF008A-V-UUM * CONT-LEAK * SUR-002-L +
NWVY01CA-FMS-CC * CONT-LEAK * SUR-002-L +
RHRF48AA-VOO-LF * FLOW-RHR-A3 * CONT-LEAK * SUR-002-L +
NWVB001X-BCO-LF * CONT-LEAK * SUR-002-L +
C0DG01P-PMS-CC * CONT-LEAK * SUR-002-L +
LPCI-PMS-CM * LPCI-BETA * CONT-LEAK * SUR-002-L +
LPCI-MOV-BETA * LPCI-MOV-CM1 * CONT-LEAK * SUR-002-L +
LPCI-MOV-BETA * LPCI-MOV-CM2 * CONT-LEAK * SUR-002-L +
RHRB01AA-BOO-CC * CONT-LEAK * SUR-002-L +
RHRC02AA-P-UUM * SCSF06AA-DENER * CONT-LEAK * SUR-002-L +
NOFLOW-RHR-A1 * RHR301AX-STR * CONT-LEAK * SUR-002-L +
RHRF04AA-VOC-LF * NOFLOW-RHR-A1 * CONT-LEAK * SUR-002-L +
RHRF98AX-XOC-LF * CONT-LEAK * SUR-002-L +
NWVY01CA-F-UUM * CONT-LEAK * SUR-002-L +
CSCD300A-PLG-LF * CONT-LEAK * SUR-002-L +
1EB35Y2X-BCO-LF * CONT-LEAK * SUR-002-L +
1EB16211-BCO * CONT-LEAK * SUR-002-L +1EB235XA-BCO-LF * /CONT-LEAK * SUR-027-R +
RHRF87AA-V-UUM * /CONT-LEAK * SUR-027-R +
NWVY01AX-ACX-LFI * /CONT-LEAK * SUR-027-R +
PC02AAAX-AOO-LFO * /CONT-LEAK * SUR-027-R +
RHRF88AX-R-UUM * SCSF06AA-DENER * /CONT-LEAK * SUR-027-R +
RHRC02AA-PMS-LF * /CONT-LEAK * SUR-027-R +
RHRF47AA-VOC-LF * /CONT-LEAK * SUR-027-R +
```

Table 3.32B

Random Failure Equations for Sequence 3A (Continued)

```
RHRF60AA-S-UUM * /CONT-LEAK * SUR-027-R +
CODG01F-S-UUM * /CONT-LEAK * SUR-027-R +
RHRB03AX-BCO-LF * FLOW-RHR-A3 * /CONT-LEAK * SUR-027-R +
CCBF068A-BCO-LF * /CONT-LEAK * SUR-027-R +
EE-CSCD300A-PLG * /CONT-LEAK * SUR-027-R +
SCSF06AA-V-UUM * /CONT-LEAK * SUR-027-R +
CCBODG1P-BCO-LF * /CONT-LEAK * SUR-027-R +
RHRH01AX-H-UUM * /CONT-LEAK * SUR-027-R +
RHRB01AA-BOO-LF * /CONT-LEAK * SUR-027-R +
RHRF55AX-R-UUM * /CONT-LEAK * SUR-027-R +
RHRH01AX-HTX-LFB * /CONT-LEAK * SUR-027-R +
RHRF47AA-V-UUM * SCSF06AA-DENER * /CONT-LEAK * SUR-027-R +
CODG002-CCC-LF * /CONT-LEAK * SUR-027-R +
NWVY01AX-A-UUM * /CONT-LEAK * SUR-027-R +
CODG01P-PMS-LF * /CONT-LEAK * SUR-027-R +
1EB1Y22X-BCO * /CONT-LEAK * SUR-027-R +
CODG01P-P-UUM * /CONT-LEAK * SUR-027-R +
RHRF03AA-VOC-LF * /CONT-LEAK * SUR-027-R +
RHRF31AX-CCC-LF * /CONT-LEAK * SUR-027-R +
RHRF74AA-V-UUM * /CONT-LEAK * SUR-027-R +
RHRF65AA-N-UUM * /CONT-LEAK * SUR-027-R +
LCSC002A-P-UUM * /CONT-LEAK * SUR-027-R +
CSCF068A-VCC-LF * /CONT-LEAK * SUR-027-R +
RHRF64AA-V-UUM * SCSF06AA-DENER * /CONT-LEAK * SUR-027-R +
RHRC02AA-P-NDUUM * /CONT-LEAK * SUR-027-R +
CSCD300A-S-UUM * /CONT-LEAK * SUR-027-R +
CODG01F-PLG-LF * /CONT-LEAK * SUR-027-R +
1EB211YX-BCO-LF * /CONT-LEAK * SUR-027-R +
RHRF48AA-V-UUM * FLOW-RHR-A3 * /CONT-LEAK * SUR-027-R +
1EB235YA-BCO-LF * /CONT-LEAK * SUR-027-R +
RHRF51AA-N-UUM * /CONT-LEAK * SUR-027-R +
1EB235A-BCO-LF * /CONT-LEAK * SUR-027-R +
```

Table 3.32B

Random Failure Equations for Sequence 3A (Continued)

```
NWVY01CA-FMS-LF * /CONT-LEAK * SUR-027-R +
CSCF008A-V-UUM * /CONT-LEAK * SUR-027-R +
NWVY01CA-FMS-CC * /CONT-LEAK * SUR-027-R +
RHRF48AA-VOO-LF * FLOW-RHR-A3 * /CONT-LEAK * SUR-027-R +
NWVB001X-BCO-LF * /CONT-LEAK * SUR-027-R +
C0DG01P-PMS-CC * /CONT-LEAK * SUR-027-R +
LPCI-PMS-CM * LPCI-BETA * /CONT-LEAK * SUR-027-R +
LPCI-MOV-BETA * LPCI-MOV-CM1 * /CONT-LEAK * SUR-027-R +
LPCI-MOV-BETA * LPCI-MOV-CM2 * /CONT-LEAK * SUR-027-R +
RHRB01AA-BOO-CC * /CONT-LEAK * SUR-027-R +
RHRC02AA-P-UUM * SCSF06AA-DENER * /CONT-LEAK * SUR-027-R +
NOFLOW-RHR-A1 * RHR301AX-STR * /CONT-LEAK * SUR-027-R +
RHRF04AA-VOC-LF * NOFLOW-RHR-A1 * /CONT-LEAK * SUR-027-R +
RHRF98AX-XOC-LF * /CONT-LEAK * SUR-027-R +
NWVY01CA-F-UUM * /CONT-LEAK * SUR-027-R +
CSCD300A-PLG-LF * /CONT-LEAK * SUR-027-R +
1EB35Y2X-BCO-LF * /CONT-LEAK * SUR-027-R +
1EB16211-BCO * /CONT-LEAK * SUR-027-R.
```

Table 3.32B

Random Failure Equations for Sequence 3A (Continued)

Σ_{RY} =
SEVY03CB-FMS-CC * CONT-LEAK * SUR-002-L +
1EB2Y22X-BCO * CONT-LEAK * SUR-002-L +
2DG1PK18-ROO-LFO * CONT-LEAK * SUR-002-L +
CCB2DG1P-BCO-LF * CONT-LEAK * SUR-002-L +
SEVB001X-BCO-LF * CONT-LEAK * SUR-002-L +
C2DG01P-P-UUM * CONT-LEAK * SUR-002-L +
RHRH01BX-H-UUM * CONT-LEAK * SUR-002-L +
C2DG01F-PLG-LF * CONT-LEAK * SUR-002-L +
RHRF48BB-VOO-LF * FLOW-RHR-B3 * CONT-LEAK * SUR-002-L +
RHRB01BB-BOO-LF * CONT-LEAK * SUR-002-L +
RHRF98BX-XOC-LF * CONT-LEAK * SUR-002-L +
RHRF47BB-VOC-LF * CONT-LEAK * SUR-002-L +
RHRC003B-P-UUM * CONT-LEAK * SUR-002-L +
RHRC02BB-P-UUM * SCSF06BB-DENER * CONT-LEAK * SUR-002-L +
SCSF06BB-V-UUM * CONT-LEAK * SUR-002-L +
RHRF65BB-N-UUM * CONT-LEAK * SUR-002-L +
CSCF068B-V-UUM * CONT-LEAK * SUR-002-L +
RHRC02BB-PMS-LF * CONT-LEAK * SUR-002-L +
1EB16212-BCO * CONT-LEAK * SUR-002-L +
1EB36Y1X-BCO-LF * CONT-LEAK * SUR-002-L +
RHRF87BB-V-UUM * CONT-LEAK * SUR-002-L +
RHRF55BX-R-UUM * CONT-LEAK * SUR-002-L +
SEVY03AX-A-UUM * CONT-LEAK * SUR-002-L +
RHRB03BX-BCO-LF * FLOW-RHR-B3 * CONT-LEAK * SUR-002-L +
RHRF47BB-V-UUM * SCSF06BB-DENER * CONT-LEAK * SUR-002-L +
RHRF88BX-R-UUM * SCSF06BB-DENER * CONT-LEAK * SUR-002-L +
SEVY03CB-F-UUM * CONT-LEAK * SUR-002-L +
SEVY03AX-ACX-LFI * CONT-LEAK * SUR-002-L +
CSCD300B-S-UUM * CONT-LEAK * SUR-002-L +
RHRF48BB-V-UUM * FLOW-RHR-B3 * CONT-LEAK * SUR-002-L +
1EB236B-BCO-LF * CONT-LEAK * SUR-002-L +

Table 3.32B

Random Failure Equations for Sequence 3A (Continued)

```
EE-C2DG01F-PLG * CONT-LEAK * SUR-002-L +
RHRF74BB-V-UUM * CONT-LEAK * SUR-002-L +
C2DG01F-S-UUM * CONT-LEAK * SUR-002-L +
1EB36XB-BCO-LF * CONT-LEAK * SUR-002-L +
RHRF60BB-S-UUM * CONT-LEAK * SUR-002-L +
RHRC02BB-P-NDUUM * CONT-LEAK * SUR-002-L +
EE-CSCD300B-PLG * CONT-LEAK * SUR-002-L +
CSCF068B-VCC-LF * CONT-LEAK * SUR-002-L +
RHRF64BB-V-UUM * SCSF06BB-DENER * CONT-LEAK * SUR-002-L +
2DG01PK18CA-LFOO * CONT-LEAK * SUR-002-L +
RHRB01BB-BOO-CC * CONT-LEAK * SUR-002-L +
RHRF51BB-N-UUM * CONT-LEAK * SUR-002-L +
RHRH01BX-HTX-LFB * CONT-LEAK * SUR-002-L +
NOFLOW-RHR-B1 * RHR301BX-STR * CONT-LEAK * SUR-002-L +
RHRF03BB-VOC-LF * CONT-LEAK * SUR-002-L +
C2DGF002-CCC-LF * CONT-LEAK * SUR-002-L +
1EB36YB-BCO-LF * CONT-LEAK * SUR-002-L +
SEVY03CB-FMS-LF * CONT-LEAK * SUR-002-L +
C2DG01P-PMS-CC * CONT-LEAK * SUR-002-L +
RHRF04BB-VOC-LF * NOFLOW-RHR-B1 * CONT-LEAK * SUR-002-L +
2DG01PSC-OOO-LFO * CONT-LEAK * SUR-002-L +
C2DG01P-PMS-LF * CONT-LEAK * SUR-002-L +
RHRF31BX-CCC-LF * CONT-LEAK * SUR-002-L +
CSCB068X-BCO-LF * CONT-LEAK * SUR-002-L +
LPCI-PMS-CM * LPCI-BETA * CONT-LEAK * SUR-002-L +
LPCI-MOV-BETA * LPCI-MOV-CM1 * CONT-LEAK * SUR-002-L +
LPCI-MOV-BETA * LPCI-MOV-CM2 * CONT-LEAK * SUR-002-L +
CSCD300B-PLG-LF * CONT-LEAK * SUR-002-L +
1EB212YX-BCO-LF * CONT-LEAK * SUR-002-L +SEVY03CB-FMS-CC * /CONT-LEAK * SUR-027-R +
1EB2Y22X-BCO * /CONT-LEAK * SUR-027-R +
2DG1PK18-ROO-LFO * /CONT-LEAK * SUR-027-R +
CCB2DG1P-BCO-LF * /CONT-LEAK * SUR-027-R +
```

Table 3.32B

Random Failure Equations for Sequence 3A (Continued)

```
SEVB001X-BCO-LF * /CONT-LEAK * SUR-027-R +
C2DG01P-P-UUM * /CONT-LEAK * SUR-027-R +
RHRH01BX-H-UUM * /CONT-LEAK * SUR-027-R +
C2DG01F-PLG-LF * /CONT-LEAK * SUR-027-R +
RHRF48BB-VOO-LF * FLOW-RHR-B3 * /CONT-LEAK * SUR-027-R +
RHRB01BB-BOO-LF * /CONT-LEAK * SUR-027-R +
RHRF98BX-XOC-LF * /CONT-LEAK * SUR-027-R +
RHRF47BB-VOC-LF * /CONT-LEAK * SUR-027-R +
RHRC003B-P-UUM * /CONT-LEAK * SUR-027-R +
RHRC02BB-P-UUM * SCSF06BB-DENER * /CONT-LEAK * SUR-027-R +
SCSF06BB-V-UUM * /CONT-LEAK * SUR-027-R +
RHRF65BB-N-UUM * /CONT-LEAK * SUR-027-R +
CSCF068B-V-UUM * /CONT-LEAK * SUR-027-R +
RHRC02BB-PMS-LF * /CONT-LEAK * SUR-027-R +
1EB16212-BCO * /CONT-LEAK * SUR-027-R +
1EB36Y1X-BCO-LF * /CONT-LEAK * SUR-027-R +
RHRF87BB-V-UUM * /CONT-LEAK * SUR-027-R +
RHRF55BX-R-UUM * /CONT-LEAK * SUR-027-R +
SEVY03AX-A-UUM * /CONT-LEAK * SUR-027-R +
RHRB03BX-BCO-LF * FLOW-RHR-B3 * /CONT-LEAK * SUR-027-R +
RHRF47BB-V-UUM * SCSF06BB-DENER * /CONT-LEAK * SUR-027-R +
RHRF88BX-R-UUM * SCSF06BB-DENER * /CONT-LEAK * SUR-027-R +
SEVY03CB-F-UUM * /CONT-LEAK * SUR-027-R +
SEVY03AX-ACX-LFI * /CONT-LEAK * SUR-027-R +
CSCD300B-S-UUM * /CONT-LEAK * SUR-027-R +
RHRF48BB-V-UUM * FLOW-RHR-B3 * /CONT-LEAK * SUR-027-R +
1EB236B-BCO-LF * /CONT-LEAK * SUR-027-R +
EE-C2DG01F-PLG * /CONT-LEAK * SUR-027-R +
RHRF74BB-V-UUM * /CONT-LEAK * SUR-027-R +
C2DG01F-S-UUM * /CONT-LEAK * SUR-027-R +
1EB36XB-BCO-LF * /CONT-LEAK * SUR-027-R +
RHRF60BB-S-UUM * /CONT-LEAK * SUR-027-R +
```

Table 3.32B

Random Failure Equations for Sequence 3A (Continued)

```
RHRC02BB-P-NDUUM * /CONT-LEAK * SUR-027-R +
EE-CSCD300B-PLG * /CONT-LEAK * SUR-027-R +
CSCF068B-VCC-LF * /CONT-LEAK * SUR-027-R +
RHRF64BB-V-UUM * SCSF06BB-DENER * /CONT-LEAK * SUR-027-R +
2DG01PK18CA-LFOO * /CONT-LEAK * SUR-027-R +
RHRB01BB-BOO-CC * /CONT-LEAK * SUR-027-R +
RHRF51BB-N-UUM * /CONT-LEAK * SUR-027-R +
RHRH01BX-HTX-LFB * /CONT-LEAK * SUR-027-R +
NOFLOW-RHR-B1 * RHR301BX-STR * /CONT-LEAK * SUR-027-R +
RHRF03BB-VOC-LF * /CONT-LEAK * SUR-027-R +
C2DGF002-CCC-LF * /CONT-LEAK * SUR-027-R +
1EB36YB-BCO-LF * /CONT-LEAK * SUR-027-R +
SEVY03CB-FMS-LF * /CONT-LEAK * SUR-027-R +
C2DG01P-PMS-CC * /CONT-LEAK * SUR-027-R +
RHRF04BB-VOC-LF * NOFLOW-RHR-B1 * /CONT-LEAK * SUR-027-R +
2DG01PSC-OOO-LFO * /CONT-LEAK * SUR-027-R +
C2DG01P-PMS-LF * /CONT-LEAK * SUR-027-R +
RHRF31BX-CCC-LF * /CONT-LEAK * SUR-027-R +
CSCB068X-BCO-LF * /CONT-LEAK * SUR-027-R +
LPCI-PMS-CM * LPCI-BETA * /CONT-LEAK * SUR-027-R +
LPCI-MOV-BETA * LPCI-MOV-CM1 * /CONT-LEAK * SUR-027-R +
LPCI-MOV-BETA * LPCI-MOV-CM2 * /CONT-LEAK * SUR-027-R +
CSCD300B-PLG-LF * /CONT-LEAK * SUR-027-R +
1EB212YX-BCO-LF * /CONT-LEAK * SUR-027-R.
```

Table 3.32B

Random Failure Equations for Sequence 3A (Continued)

Σ_{RZ} =
RHRF48BB-VOO-LF * FLOW-RHR-B3 * CONT-LEAK * SUR-002-L +
1EB36YB-BCO-LF * CONT-LEAK * SUR-002-L +
RHRF47BB-VOC-LF * CONT-LEAK * SUR-002-L +
CSCB068X-BCO-LF * CONT-LEAK * SUR-002-L +
CCB2DG1P-BCO-LF * CONT-LEAK * SUR-002-L +
RHRC02BB-P-NDUUM * CONT-LEAK * SUR-002-L +
2DG01PSC-OOO-LFO * CONT-LEAK * SUR-002-L +
2DG01PK18CA-LFOO * CONT-LEAK * SUR-002-L +
CSCF068B-VCC-LF * CONT-LEAK * SUR-002-L +
EE-C2DG01F-PLG * CONT-LEAK * SUR-002-L +
C2DG01P-PMS-CC * CONT-LEAK * SUR-002-L +
RHRH01BX-HTX-LFB * CONT-LEAK * SUR-002-L +
RHRF98BX-XOC-LF * CONT-LEAK * SUR-002-L +
RHRF60BB-S-UUM * CONT-LEAK * SUR-002-L +
RHRB01BB-BOO-LF * CONT-LEAK * SUR-002-L +
CSCF068B-V-UUM * CONT-LEAK * SUR-002-L +
SCSF06BB-V-UUM * CONT-LEAK * SUR-002-L +
SEVY03AX-A-UUM * CONT-LEAK * SUR-002-L +
1EB212YX-BCO-LF * CONT-LEAK * SUR-002-L +
1EB236B-BCO-LF * CONT-LEAK * SUR-002-L +
1EB36XB-BCO-LF * CONT-LEAK * SUR-002-L +
RHRB01BB-BOO-CC * CONT-LEAK * SUR-002-L +
SEVY03CB-FMS-LF * CONT-LEAK * SUR-002-L +
RHRB03BX-BCO-LF * FLOW-RHR-B3 * CONT-LEAK * SUR-002-L +
NOFLOW-RHR-B1 * RHR301BX-STR * CONT-LEAK * SUR-002-L +
RHRF87BB-V-UUM * CONT-LEAK * SUR-002-L +
SEVY03AX-ACX-LFI * CONT-LEAK * SUR-002-L +
RHRF51BB-N-UUM * CONT-LEAK * SUR-002-L +
RHRF03BB-VOC-LF * CONT-LEAK * SUR-002-L +
RHRF88BX-R-UUM * SCSF06BB-DENER * CONT-LEAK * SUR-002-L +
RHRC003B-P-UUM * CONT-LEAK * SUR-002-L +

Table 3.32B

Random Failure Equations for Sequence 3A (Continued)

RHRC02BB-PMS-LF * CONT-LEAK * SUR-002-L +
C2DG01P-PMS-LF * CONT-LEAK * SUR-002-L +
RHRF65BB-N-UUM * CONT-LEAK * SUR-002-L +
1EB36Y1X-BCO-LF * CONT-LEAK * SUR-002-L +
LPCI-PMS-CM * LPCI-BETA * CONT-LEAK * SUR-002-L +
LPCI-MOV-BETA * LPCI-MOV-CM1 * CONT-LEAK * SUR-002-L +
LPCI-MOV-BETA * LPCI-MOV-CM2 * CONT-LEAK * SUR-002-L +
1EB2Y22X-BCO * CONT-LEAK * SUR-002-L +
1EB16212-BCO * CONT-LEAK * SUR-002-L +
CSCD300B-S-UUM * CONT-LEAK * SUR-002-L +
C2DG01F-PLG-LF * CONT-LEAK * SUR-002-L +
RHRF48BB-V-UUM * FLOW-RHR-B3 * CONT-LEAK * SUR-002-L +
C2DGF002-CCC-LF * CONT-LEAK * SUR-002-L +
RHRH01BX-H-UUM * CONT-LEAK * SUR-002-L +
SEVY03CB-FMS-CC * CONT-LEAK * SUR-002-L +
C2DG01F-S-UUM * CONT-LEAK * SUR-002-L +
RHRF74BB-V-UUM * CONT-LEAK * SUR-002-L +
SEVY03CB-F-UUM * CONT-LEAK * SUR-002-L +
EE-CSCD300B-PLG * CONT-LEAK * SUR-002-L +
SEVB001X-BCO-LF * CONT-LEAK * SUR-002-L +
RHRF04BB-VOC-LF * NOFLOW-RHR-B1 * CONT-LEAK * SUR-002-L +
RHRF47BB-V-UUM * SCSF06BB-DENER * CONT-LEAK * SUR-002-L +
C2DG01P-P-UUM * CONT-LEAK * SUR-002-L +
RHRF31BX-CCC-LF * CONT-LEAK * SUR-002-L +
CSCD300B-PLG-LF * CONT-LEAK * SUR-002-L +
RHRC02BB-P-UUM * SCSF06BB-DENER * CONT-LEAK * SUR-002-L +
RHRF64BB-V-UUM * SCSF06BB-DENER * CONT-LEAK * SUR-002-L +
2DG1PK18-ROO-LFO * CONT-LEAK * SUR-002-L +
RHRF55BX-R-UUM * CONT-LEAK * SUR-002-L +RHRF48BB-VOO-LF * FLOW-RHR-B3 * /CONT-LEAK * SUR-027-R +
1EB36YB-BCO-LF * /CONT-LEAK * SUR-027-R +
RHRF47BB-VOC-LF * /CONT-LEAK * SUR-027-R +

Table 3.32B

Random Failure Equations for Sequence 3A (Continued)

```
CSCB068X-BCO-LF * /CONT-LEAK * SUR-027-R +
CCB2DG1P-BCO-LF * /CONT-LEAK * SUR-027-R +
RHRC02BB-P-NDUUM * /CONT-LEAK * SUR-027-R +
2DG01PSC-OOO-LFO * /CONT-LEAK * SUR-027-R +
2DG01PK18CA-LFOO * /CONT-LEAK * SUR-027-R +
CSCF068B-VCC-LF * /CONT-LEAK * SUR-027-R +
EE-C2DG01F-PLG * /CONT-LEAK * SUR-027-R +
C2DG01P-PMS-CC * /CONT-LEAK * SUR-027-R +
RHRH01BX-HTX-LFB * /CONT-LEAK * SUR-027-R +
RHRF98BX-XOC-LF * /CONT-LEAK * SUR-027-R +
RHRF60BB-S-UUM * /CONT-LEAK * SUR-027-R +
RHRB01BB-BOO-LF * /CONT-LEAK * SUR-027-R +
CSCF068B-V-UUM * /CONT-LEAK * SUR-027-R +
SCSF06BB-V-UUM * /CONT-LEAK * SUR-027-R +
SEVY03CB-F-UUM * /CONT-LEAK * SUR-027-R +
SEVY03AX-A-UUM * /CONT-LEAK * SUR-027-R +
1EB212YX-BCO-LF * /CONT-LEAK * SUR-027-R +
1EB236B-BCO-LF * /CONT-LEAK * SUR-027-R +
1EB36XB-BCO-LF * /CONT-LEAK * SUR-027-R +
RHRB01BB-BOO-CC * /CONT-LEAK * SUR-027-R +
SEVY03CB-FMS-LF * /CONT-LEAK * SUR-027-R +
RHRB03BX-BCO-LF * FLOW-RHR-B3 * /CONT-LEAK * SUR-027-R +
NOFLOW-RHR-B1 * RHR301BX-STR * /CONT-LEAK * SUR-027-R +
RHRF87BB-V-UUM * /CONT-LEAK * SUR-027-R +
SEVY03AX-ACX-LFI * /CONT-LEAK * SUR-027-R +
RHRF51BB-N-UUM * /CONT-LEAK * SUR-027-R +
RHRF03BB-VOC-LF * /CONT-LEAK * SUR-027-R +
RHRF88BX-R-UUM * SCSF06BB-DENER * /CONT-LEAK * SUR-027-R +
RHRC003B-P-UUM * /CONT-LEAK * SUR-027-R +
RHRC02BB-PMS-LF * /CONT-LEAK * SUR-027-R +
C2DG01P-PMS-LF * /CONT-LEAK * SUR-027-R +
RHRF65BB-N-UUM * /CONT-LEAK * SUR-027-R +
```

Table 3.32B

Random Failure Equations for Sequence 3A (Concluded)

```
1EB36Y1X-BCO-LF * /CONT-LEAK * SUR-027-R +
LPCI-PMS-CM * LPCI-BETA * /CONT-LEAK * SUR-027-R +
LPCI-MOV-BETA * LPCI-MOV-CM1 * /CONT-LEAK * SUR-027-R +
LPCI-MOV-BETA * LPCI-MOV-CM2 * /CONT-LEAK * SUR-027-R +
1EB2Y22X-BCO * /CONT-LEAK * SUR-027-R +
1EB16212-BCO * /CONT-LEAK * SUR-027-R +
CSCD300B-S-UUM * /CONT-LEAK * SUR-027-R +
C2DG01F-PLG-LF * /CONT-LEAK * SUR-027-R +
RHRF48BB-V-UUM * FLOW-RHR-B3 * /CONT-LEAK * SUR-027-R +
C2DGF002-CCC-LF * /CONT-LEAK * SUR-027-R +
RHRH01BX-H-UUM * /CONT-LEAK * SUR-027-R +
SEVY03CB-FMS-CC * /CONT-LEAK * SUR-027-R +
C2DG01F-S-UUM * /CONT-LEAK * SUR-027-R +
RHRF74BB-V-UUM * /CONT-LEAK * SUR-027-R +
EE-CSCD300B-PLG * /CONT-LEAK * SUR-027-R +
SEVB001X-BCO-LF * /CONT-LEAK * SUR-027-R +
RHRF04BB-VOC-LF * NOFLOW-RHR-B1 * /CONT-LEAK * SUR-027-R +
RHRF47BB-V-UUM * SCSF06BB-DENER * /CONT-LEAK * SUR-027-R +
C2DG01P-P-UUM * /CONT-LEAK * SUR-027-R +
RHRF31BX-CCC-LF * /CONT-LEAK * SUR-027-R +
CSCD300B-PLG-LF * /CONT-LEAK * SUR-027-R +
RHRC02BB-P-UUM * SCSF06BB-DENER * /CONT-LEAK * SUR-027-R +
RHRF64BB-V-UUM * SCSF06BB-DENER * /CONT-LEAK * SUR-027-R +
2DG1PK18-ROO-LFO * /CONT-LEAK * SUR-027-R +
RHRF55BX-R-UUM * /CONT-LEAK * SUR-027-R.
```

3.12 References

1. "LaSalle County Station Final Safety Analysis Report, Appendix H" Commonwealth Edison Company, Chicago, Il, February, 1983.

2. N. O. Siu, "COMPBRN - A Computer Code for Modeling Compartment Fires," NUREG/CR-3239, UCLA-ENG-8257, University of California, Los Angelos, CA, May 1983.

3. V. Ho, N. O. Siu, and G. Apostolakis, "COMPBRN III - A Computer Code for Modeling Compartment Fires," UCLA-ENG-8524, University of California, Los Angelos, CA, November 1985.

4. J. A. Lambright, S. P. Nowlen, V. F. Nicolette, and M. P. Bohn, "Fire Risk Scoping Study: Current Perception of Unaddressed Fire Risk Issues," NUREG/CR-5088, SAND88-0177, Sandia National Laboratories, Albuquerque, NM, December 1988.

5. R. L. Iman and M. J. Shortencarier, "A User's Guide for the Top Event Matrix Analysis Code (TEMAC)," NUREG/CR-4598, SAND86-0960, Sandia National Laboratories, Albuquerque, NM, August 1986.

6. Nuclear Regulatory Commission Generic Letter 83-33, Dated October 19, 1983, U. S. Nuclear Regulatory Commission, Washington, DC.

7. "Seabrook Station Probabilistic Safety Assessment," Section 9.4, Public Service Company of New Hampshire and Yankee Atomic Electric Company, December 1983.

8. "Severe Accident Risk Assessment Limerick Generating Station," Chapter 4, Main Report, Report No. 4161, Philadelphia Electric Company, Philadelphia, PA, April 1983.

9. W. T. Wheelis, "Users' Guide for a Personal-Computer-Based Nuclear Power Plant Fire Data Base," NUREG/CR-4586, SAND86-0300, Sandia National Laboratories, Albuquerque, NM, August 1986.

10. R. L. Iman and S. C. Hora, "Modeling Time to Recovery and Initiating Event Frequency for Loss of Off-Site Power Incidents at Nuclear Power Plants," NUREG/CR-5032, SAND87-2428, Sandia National Laboratories, Albuquerque, NM, January 1988.

11. R. B. Worrell, "SETS Reference Manual," NUREG/CR-4213, SAND83-2675, Sandia National Laboratories, Albuquerque, NM, May 1985.

12. D. W. Stack, "A SETS User's Manual for Accident Sequence Analysis," NUREG/CR-3547, SAND83-2238, Sandia National Laboratories, Albuquerque, NM, January 1984.

13. C. Ruger, J. L. Boccio, and M. A. Azarm, "Evaluation of Current Methodology Employed in Probabilistic Risk Assessment (PRA) of Fire Events at Nuclear Power Plants," NUREG/CR-4229, Brookhaven National Laboratory, May 1985.

14. V. F. Nicolette, S. P. Nowlen, and J. A. Lambright, "Observations Concerning the COMPBRN III Fire Growth Code," SAND88-2160C, paper presented at ANS International Topical Meeting on Probability, Reliability, and Safety Assessment, Pittsburgh, PA, April 2-7 1989.

15. W. T. Wheelis, "Transient Combustible Fuel Sources Found at Nuclear Power Plants (Data)," Letter Report, Sandia National Laboratories, Albuquerque, NM, July 1984.

16. V. F. Nicolette and S. P. Nowlen, "A Critical Look at Nuclear Qualified Electrical Cable Insulation Ignition and Damage Thresholds," SAND88-2161, paper presented at Operability of Nuclear Systems in Normal and Adverse Environments, Lyon, France, September 18-22, 1989.

17. R. L. Iman and M. J. Shortencarier, "A FORTRAN 77 Program and User's Guide for the Generation of Latin Hypercube and Random Samples for Use with Computer Models," NUREG/CR-3024, SAND83-2365, Sandia National Laboratories, Albuquerque, NM, March 1984.

18. J. C. Chavez and S. P. Nowlen, "An Experimental Investigation of Internally Ignited Fires in Nuclear Power Plant Cabinets, Part II - Room Effects Tests," NUREG/CR-4527/V2, SAND86-0336, Sandia National Laboratories, Albuquerque, NM, October, 1988.

19. J. C. Chavez, "An Experimental Investigation of Internally Ignited Fires in Nuclear Power Plant Cabinets, Part I - Cabinet Effects Tests," NUREG/CR-4527/V1, SAND86-0336, Sandia National Laboratories, Albuquerque, NM, April 1987.

20. U.S. Nuclear Regulatory Commission, "Severe Accident Risks: An Assessment for Five U.S. Nuclear Power Plants. Final Summary Report," NUREG-1150, Volume 1-3, U. S. Nuclear Regulatory Commission, Washington, DC, December 1990.

APPENDIX A

MANUAL FIRE SUPPRESSION ANALYSIS

A.0 INTRODUCTION

An important component in the determination of the frequency of fire-induced core damage scenarios is the ability of the plant fire brigade to respond to and extinguish fires in a timely fashion before damage can occur to plant systems and components important to safety. Mike DiMascio of Firepro, Inc. performed the time to suppression portions of this analysis. A thorough walkdown of the plant and review of its fire brigade practices is necessary to determine the probability of manual suppression in a given time frame for all critical plant areas. The COMPBRN fire propagation code predicts the time to ignition or damage of critical cables and components. The COMPBRN predicted fire-induced equipment or cable damage times, adjusted by expert judgement, are then used in conjunction with the distribution curves on time to suppression of fires to obtain the probability that a given fire will damage critical safety equipment before it can be suppressed. This Appendix is a summary of the analysis methods used and the results of the analysis for the LaSalle plant.

During the initial plant visit, a thorough walkdown of the plant was conducted to assess plant fire fighting capabilities and to note access routes for extinguishing fires in the critical plant locations. Information was gathered regarding installed automatic fire suppression systems; manual fire fighting equipment such as hose reels and portable extinguishers; fire detectors and alarm provisions; limitations to access (locked doors, security restrictions, etc.); distances from external points of access to the fire locations; and room size and geometry as they relate to access and the level of smoke obscuration. Interviews of plant fire personnel and a comprehensive tour of the fire fighting facilities were conducted to assess fire response time, distances to fire locations, training, and equipment provisions.

The Fire Brigade at LaSalle consists of 65 members of which 52 are firefighters and 13 are officers. There are an additional 11 volunteer firefighters that mostly handle the electrical/mechanical aspects of an incident. At any one time, the plant is required to have not less than five Brigade members at the site. Normally, the minimum staffing for the brigade occurs during the night shifts. At those times, there are not less than ten Fire Brigade members at the plant.

Each new member goes through a 1-week training period consisting of 4 days of in-class instruction and 1 day of field instruction. The field instruction consists of actual firefighting situations utilizing fire extinguishers, hoses, breathing apparatus in a smoke house, etc. After initial training, Fire Brigade members attend 2-hr. review sessions each quarter. During each review session, two of 16 topics are covered so that all 16 topics are covered within each 2-yr. period. Additionally, during each quarter there are six fire drills. Each member is required to participate in not less than two drills per yr. Each member also participates in an additional day of field training once each year.

The local fire departments provide mutual aid to the station if needed. Marseilles would be called on first, Grand Ridge and Seneca would be called on second, and Ransome would be the last department called in. Depending upon the time of day, the plant can expect 20 to 90 members from the complete mutual aid response.

When the fire alarm system in the control room indicates operation of a detection device, the written procedures require the siren to be activated and an announcement to be made over the public address system. Standard operating procedures, though unwritten, also include a radio announcement to all Brigade members on shift at the time.

When the alarm is activated, the Fire Chief reports to the scene immediately and all members of the Fire Brigade report to the nearest equipment cage to suit up. When the Fire Chief reaches the scene, he radios the firefighters with information on what equipment is needed. At that time, firefighters respond to the scene with the needed equipment and suppression activities are begun immediately. Normal response times based on fire drill reports on file in the Fire Marshal's office indicate the Fire Chief normally arrives on the scene in approximately 2 min. and brigade members arrive on the scene in 2 to 5 min.

There are four equipment cages located around the plant with one additional cage planned. Three of the four cages are fully equipped, one cage has only firefighting clothing and the planned cage will have equipment only.

Radiation chemistry personnel also respond to the scene in an emergency. These people have cards or keys to gain access to radiation areas. The Fire Chief responding to the scene has the option of downgrading the card access system via security to gain access. Some very high radiation areas need special keys possessed only by the radiation chemistry personnel. Since no high radiation areas survived the screening analysis, further analysis of the response of fire and radiation personnel to these areas was not required.

The majority of the plant is covered by a fire/smoke detection system. Every 6 months, all devices in the plant are tested to ensure proper operation. The fire pumps supplying water to the manual fire suppression systems are tested once a year in accordance with written procedures.

In establishing the time from established burning (flame approximately 10 in. tall) to suppression, the information gathered during the plant visit was used to determine the time to reach a number of discrete phases or events. Those phases included the following:

1. Time to detection,
2. Time to suppression application, and
3. Time to suppression or substantial control.

The second phase was further divided into subphases, as follows:

2a. Response to the equipment cage,
2b. Time to suit up,
2c. Response to the scene,
2d. Set-up at the scene, and
2e. Scene search.

The estimated times--maximum, minimum, and what was considered to be the expected or median time--were provided. Tables A-1 to A-20 summarize these estimates of cumulative times from established burning to the end of each phase. Also provided, in addition to the room and location, is information on the type of detection; if present, the type of automatic suppression; and notes on assessment of human detection, manual suppression accessibility, and equipment available.

The degree of confidence in the estimated times varies, depending on the building features and the phase under consideration. For Phase 1, the confidence in the time estimate is only fair. This is due primarily to the fact that the majority of the automatic detection systems in the areas reviewed utilize smoke detectors. In many cases, detectors were installed at non-standard spacing and non-standard locations. In addition, expected smoke movement is affected by the large amount of equipment at the ceiling and building ventilation systems. For this reason, response times were designated in ranges as opposed to a specific time.

For Phase 2, with the exception of 2e, the level of confidence is good to excellent. For 2e--Fire Brigade search of the scene to determine the fire location--the level of confidence is again only fair. Time to locate the fire will vary greatly depending on the size of the area, the size of the fire, the level of smoke obscuration, the amount of equipment within the area, etc.

Finally, the level of confidence for the Phase 3 figures is good.

There is an extremely low probability that, upon arriving at the scene, the Fire Brigade will be unable to locate the fire due to smoke obscuration. This is due to the fact that, for most of the areas surviving screening, the large room areas or openness to other areas precluded buildup of sufficient smoke to obscure the fire location. This scenario, therefore, was not considered in evaluating the time to manual suppression and the personnel were not required to suit-up with SCBA (Self-Contained Breathing Apparatus).

A computer model (ASET) was used to estimate the fire size and the depth and temperature of smoke in the room. This information was utilized in predicting conditions within the room at the time of detection and Fire Brigade arrival at the room, and for estimating the time to find and extinguish/suppress the fire. Room geometry and heat release rates are

inputs for this computer model. A second computer model (DETACT-QS) was used to predict the time to actuation of automatic detectors, and/or automatic sprinklers. Both of these codes have since been subsumed into a suite of codes called FPETOOL 3.0.[1]

The total cumulative times to extinguishment of Phase 3 were then entered into a Sandia-developed statistical analysis and plotting routine developed for this analysis which includes a curve fitting parameter estimation routine. The results, depicted in Figures A-1 through A-20, are user defined lognormal plots of suppression probability versus time to suppression for the various plant areas. The objective of the curve fitting routine is to establish a "best fit" lognormal probability distribution function for each of the data sets of time to suppression (Phase 3 cumulative times) versus cumulative probability of suppression.

Due to the limited number of data points (minimum, median, and maximum), the curve fit is in some cases difficult to establish and still result in confidence in the correlation, especially at the lower end of the curve. Since the times to damage determined by the COMPBRN code are typically in the range of 2 to 12 min., the lower end of the curve was deemed the most important with respect to establishing the best fit. Therefore, since only two points are needed to define a lognormal distribution, the minimum and the median were entered into the plotting routine to yield curves constrained to pass through these values. The resulting curves are judged to be more representative of the suppression probabilities in the range of interest.

Once the suppression time plots were generated, the probability of not being able to suppress the fire in a given time frame in any plant area was determined. Uncertainties in this estimate were generated by adding and subtracting 15 min. from the COMPBRN predicted time to damage. This time difference from the COMPBRN predicted results was derived from expert judgement and can result from a number of physical uncertainties, including prolonged smoldering of a fire before ignition, and thus, is felt to represent realistic bounds on time to damage.

A.1 REFERENCES

1. FPETOOL 3.0 Issued by U. S. Department of Commerce, National Institute of Standards and Technology, Building and Fire Research Laboratory, Gaithersburg, MD, 20899, March 5, 1992.

Table A-1

LaSalle Manual Fire Suppression
3B1 Reactor Building

AUTOMATIC DETECTION: Smoke Detection

MANUAL DETECTION: Very Low Probability

MANUAL SUPPRESSION
EQUIPMENT AVAILABLE: Standpipe with preconnected 1-1/2-in. hose, multi-purpose fire extinguishers

AUTOMATIC SUPPRESSION: None

	MIN.	MAX.	AVG.
1. TIME TO DETECTION (MINUTES)	0-5	10-15	5-10
2. TIME TO SUPPRESSION APPLICATION			
2a. Response to Cage*	1	4	2
2b. Suit-Up Without SCBA	0.5	2	1
2c. Response to Scene*	3	5	4
2d. Set-Up at Scene**	0.5	2.5	1
2e. Scene Search	0.5	5	2
SUBTOTAL	5.5	18.5	10
3. TIME TO SUPPRESSION OR SUBSTANTIAL CONTROL	2	20	5
TOTAL	7.5-12.5	48.5-53.5	20-25

NOTES: * These times assume the cardreader system is operational and radiation checks are not done.

** If the fire involves a flammable liquid spill and the foam equipment is needed, add 2 min to subtotal for Phase 2.

Table A-2

LaSalle Manual Fire Suppression
3B2 Reactor Building

AUTOMATIC DETECTION: Partial Smoke Detection System

MANUAL DETECTION: None

MANUAL SUPPRESSION
EQUIPMENT AVAILABLE: Standpipe with preconnected 1-1/2-in. hose, multi-purpose fire extinguishers

AUTOMATIC SUPPRESSION: None

	MIN.	MAX.	AVG.
1. TIME TO DETECTION (MINUTES)	5-10	15+	10-15
2. TIME TO SUPPRESSION APPLICATION			
2a. Response to Cage*	1	4	2
2b. Suit-Up Without SCBA	0.5	2	1
2c. Response to Scene*	3	5	4
2d. Set-Up at Scene**	0.5	2.5	1
2e. Scene Search	0.5	5	2
SUBTOTAL	5.5	18.5	10
3. TIME TO SUPPRESSION OR SUBSTANTIAL CONTROL	2	20	5
TOTAL	12.5-17.5	53.5+	25-30

NOTES: * These times assume the cardreader system is operational and radiation checks are not done.

** If the fire involves a flammable liquid spill and the foam equipment is needed, add 2 min to subtotal for Phase 2.

Table A-3

LaSalle Manual Fire Suppression
3D Reactor Building

AUTOMATIC DETECTION: Smoke Detection

MANUAL DETECTION: Very Low Probability

MANUAL SUPPRESSION
EQUIPMENT AVAILABLE: Standpipe with preconnected 1-1/2-in. hose, multi-purpose fire extinguishers

AUTOMATIC SUPPRESSION: None

	MIN.	MAX.	AVG.
1. TIME TO DETECTION (MINUTES)	0-5	10-15	5-10
2. TIME TO SUPPRESSION APPLICATION			
2a. Response to Cage*	1	4	2
2b. Suit-Up Without SCBA	0.5	2	1
2c. Response to Scene*	3	5	4
2d. Set-Up at Scene**	0.5	2.5	1
2e. Scene Search	1	8	3
SUBTOTAL	6	21.5	11
3. TIME TO SUPPRESSION OR SUBSTANTIAL CONTROL	2	20	5
TOTAL	8-13	51.5-56.5	21-26

NOTES: * These times assume the cardreader system is operational and radiation checks are not done.

** If the fire involves a flammable liquid spill and the foam equipment is needed, add 2 min to subtotal for Phase 2.

Table A-4

LaSalle Manual Fire Suppression
3E Reactor Building

AUTOMATIC DETECTION: Smoke Detection

MANUAL DETECTION: Very Low Probability

MANUAL SUPPRESSION
EQUIPMENT AVAILABLE: Standpipe with preconnected 1-1/2-in. hose, multi-purpose fire extinguishers

AUTOMATIC SUPPRESSION: None

	MIN.	MAX.	AVG.
1. TIME TO DETECTION (MINUTES)	0-5	10-15	5-10
2. TIME TO SUPPRESSION APPLICATION			
2a. Response to Cage*	1	4	2
2b. Suit-Up Without SCBA	0.5	2	1
2c. Response to Scene*	3	5	4
2d. Set-Up at Scene**	0.5	2.5	1
2e. Scene Search	1	8	3
SUBTOTAL	6	21.5	11
3. TIME TO SUPPRESSION OR SUBSTANTIAL CONTROL	2	20	5
TOTAL	8-13	51.5-56.5	21-26

NOTES: * These times assume the cardreader system is operational and radiation checks are not done.

** If the fire involves a flammable liquid spill and the foam equipment is needed, add 2 min to subtotal for Phase 2.

Table A-5

LaSalle Manual Fire Suppression
3F Reactor Building

AUTOMATIC DETECTION: Smoke Detection

MANUAL DETECTION: Very Low Probability

MANUAL SUPPRESSION
EQUIPMENT AVAILABLE: Standpipe with preconnected 1-1/2-in. hose, multi-purpose fire extinguishers

AUTOMATIC SUPPRESSION: None

	MIN.	MAX.	AVG.
1. TIME TO DETECTION (MINUTES)	0-5	10-15	5-10
2. TIME TO SUPPRESSION APPLICATION			
2a. Response to Cage*	1	4	2
2b. Suit-Up Without SCBA	0.5	2	1
2c. Response to Scene*	2	4	3
2d. Set-Up at Scene**	0.5	2.5	1
2e. Scene Search	1	8	3
SUBTOTAL	5	20.5	10
3. TIME TO SUPPRESSION OR SUBSTANTIAL CONTROL	2	20	5
TOTAL	7-12	50.5-55.5	20-25

NOTES: * These times assume the cardreader system is operational and radiation checks are not done.

** If the fire involves a flammable liquid spill and the foam equipment is needed, add 2 min to subtotal for Phase 2.

Table A-6

LaSalle Manual Fire Suppression
3G Reactor Building

AUTOMATIC DETECTION: Smoke Detection

MANUAL DETECTION: Very Low Probability

MANUAL SUPPRESSION
EQUIPMENT AVAILABLE: Standpipe with preconnected 1-1/2-in. hose, multi-purpose fire extinguishers

AUTOMATIC SUPPRESSION: None

	MIN.	MAX.	AVG.
1. TIME TO DETECTION (MINUTES)	0-5	10-15	5-10
2. TIME TO SUPPRESSION APPLICATION			
2a. Response to Cage*	1	4	2
2b. Suit-Up Without SCBA	0.5	2	1
2c. Response to Scene*	2	4	3
2d. Set-Up at Scene**	0.5	2.5	1
2e. Scene Search	1	8	3
SUBTOTAL	5	20.5	10
3. TIME TO SUPPRESSION OR SUBSTANTIAL CONTROL	2	20	5
TOTAL	7-12	50.5-55.5	20-25

NOTES: * These times assume the cardreader system is operational and radiation checks are not done.

** If the fire involves a flammable liquid spill and the foam equipment is needed, add 2 min to subtotal for Phase 2.

Table A-7

LaSalle Manual Fire Suppression
4A Ventilation Equipment Area

AUTOMATIC DETECTION: Partial Smoke Detection

MANUAL DETECTION: Low Probability

MANUAL SUPPRESSION
EQUIPMENT AVAILABLE: Standpipe with preconnected 1-1/2-in. hose, multi-purpose fire extinguisher

AUTOMATIC SUPPRESSION: None

	MIN.	MAX.	AVG.
1. TIME TO DETECTION (MINUTES)	5-10	15+	10-15
2. TIME TO SUPPRESSION APPLICATION			
2a. Response to Cage*	1	4	2
2b. Suit-Up Without SCBA	0.5	2	1
2c. Response to Scene*	2	5	3
2d. Set-Up at Scene**	0.5	2.5	1
2e. Scene Search	2	7	4
SUBTOTAL	6	20.5	11
3. TIME TO SUPPRESSION OR SUBSTANTIAL CONTROL	2	10	5
TOTAL	13-18	45.5+	26-31

NOTES: * These times assume the cardreader system is operational and radiation checks are not done.

** If the fire involves a flammable liquid spill and the foam equipment is needed, add 2 min to subtotal for Phase 2.

Table A-8

LaSalle Manual Fire Suppression
4B Ventilation Equipment Area

AUTOMATIC DETECTION: Partial Smoke Detection

MANUAL DETECTION: Low Probability

MANUAL SUPPRESSION
EQUIPMENT AVAILABLE: Standpipe with preconnected 1-1/2-in. hose, multi-purpose fire extinguisher

AUTOMATIC SUPPRESSION: None

	MIN.	MAX.	AVG.
1. TIME TO DETECTION (MINUTES)	5-10	15+	10-15
2. TIME TO SUPPRESSION APPLICATION			
2a. Response to Cage*	1	4	2
2b. Suit-Up Without SCBA	0.5	2	1
2c. Response to Scene*	2	5	3
2d. Set-Up at Scene**	0.5	2.5	1
2e. Scene Search	2	7	4
SUBTOTAL	6	20.5	11
3. TIME TO SUPPRESSION OR SUBSTANTIAL CONTROL	2	10	5
TOTAL	13-18	45.5+	26-31

NOTES: * These times assume the cardreader system is operational and radiation checks are not done.

** If the fire involves a flammable liquid spill and the foam equipment is needed, add 2 min to subtotal for Phase 2.

Table A-9

LaSalle Manual Fire Suppression
4C1 Control Room

AUTOMATIC DETECTION: Smoke Detectors

MANUAL DETECTION: Very High Probability

MANUAL SUPPRESSION
EQUIPMENT AVAILABLE: Standpipe with preconnected 1-1/2-in. hose, various fire extinguishers, CO_2 hose stations

AUTOMATIC SUPPRESSION: None

	MIN.	MAX.	AVG.
1. TIME TO DETECTION (MINUTES)	0-2	5-10	2-5
2. TIME TO SUPPRESSION APPLICATION			
2a. Response to Cage*	DNA	DNA	DNA
2b. Suit-Up Without SCBA	DNA	DNA	DNA
2c. Response to Scene*	DNA	DNA	DNA
2d. Set-Up at Scene**	0.5	2.5	1
2e. Scene Search	0.5	2	1
SUBTOTAL	1	4.5	2
3. TIME TO SUPPRESSION OR SUBSTANTIAL CONTROL	1	5	2
TOTAL	2-4	14.5-19.5	6-9

NOTES: * These times assume the cardreader system is operational and radiation checks are not done.

** If the fire involves a flammable liquid spill and the foam equipment is needed, add 2 min to subtotal for Phase 2.

Table A-10

LaSalle Manual Fire Suppression
4D2 Cable Spreading Room

AUTOMATIC DETECTION: Smoke Detection

MANUAL DETECTION: Low Probability

MANUAL SUPPRESSION
EQUIPMENT AVAILABLE: Standpipe with preconnected 1-1/2-in. hose, multi-purpose fire extinguisher, CO_2 station

AUTOMATIC SUPPRESSION: Automatic Sprinklers

	MIN.	MAX.	AVG.
1. TIME TO DETECTION (MINUTES)	0-3	5-10	3-5
2. TIME TO SUPPRESSION APPLICATION			
2a. Response to Cage*	1	4	2
2b. Suit-Up Without SCBA	0.5	2	1
2c. Response to Scene*	1	3	2
2d. Set-Up at Scene**	0.5	2.5	1
2e. Scene Search	1	5	2
SUBTOTAL	4	16.5	8
3. TIME TO SUPPRESSION OR SUBSTANTIAL CONTROL	2	10	5
TOTAL	6-9	31.5-36.5	16-18

NOTES: * These times assume the cardreader system is operational and radiation checks are not done.

** If the fire involves a flammable liquid spill and the foam equipment is needed, add 2 min to subtotal for Phase 2.

Table A-11

LaSalle Manual Fire Suppression
4D4 Electric Equipment Room

AUTOMATIC DETECTION: Smoke Detection

MANUAL DETECTION: Very Low Probability

MANUAL SUPPRESSION
EQUIPMENT AVAILABLE: Multipurpose fire extinguisher, CO_2 hose station

AUTOMATIC SUPPRESSION: None

	MIN.	MAX.	AVG.
1. TIME TO DETECTION (MINUTES)	0-3	5-10	3-5
2. TIME TO SUPPRESSION APPLICATION			
2a. Response to Cage*	1	4	2
2b. Suit-Up Without SCBA	0.5	2	1
2c. Response to Scene*	1	3	2
2d. Set-Up at Scene**	0.5	2.5	1
2e. Scene Search	1	5	2
SUBTOTAL	4	16.5	8
3. TIME TO SUPPRESSION OR SUBSTANTIAL CONTROL	2	10	5
TOTAL	6-9	31.5-36.5	16-18

NOTES: * These times assume the cardreader system is operational and radiation checks are not done.

** If the fire involves a flammable liquid spill and the foam equipment is needed, add 2 min to subtotal for Phase 2.

Table A-12

LaSalle Manual Fire Suppression
4E2 Auxiliary Equipment Room

AUTOMATIC DETECTION: Smoke Detection

MANUAL DETECTION: Very Low Probability

MANUAL SUPPRESSION
EQUIPMENT AVAILABLE: Multipurpose fire extinguisher

AUTOMATIC SUPPRESSION: None

	MIN.	MAX.	AVG.
1. TIME TO DETECTION (MINUTES)	0-3	5-10	3-5
2. TIME TO SUPPRESSION APPLICATION			
2a. Response to Cage*	1	4	2
2b. Suit-Up Without SCBA	0.5	2	1
2c. Response to Scene*	1	3	2
2d. Set-Up at Scene**	0.5	2.5	1
2e. Scene Search	1	5	2
SUBTOTAL	4	16.5	8
3. TIME TO SUPPRESSION OR SUBSTANTIAL CONTROL	2	10	5
TOTAL	6-9	31.5-36.5	16-18

NOTES: * These times assume the cardreader system is operational and radiation checks are not done.

** If the fire involves a flammable liquid spill and the foam equipment is needed, add 2 min to subtotal for Phase 2.

Table A-13

LaSalle Manual Fire Suppression
4E4 Essential Switchgear Room

AUTOMATIC DETECTION: Smoke Detection

MANUAL DETECTION: Very Low Probability

MANUAL SUPPRESSION
EQUIPMENT AVAILABLE: Multipurpose fire extinguisher

AUTOMATIC SUPPRESSION: None

	MIN.	MAX.	AVG.
1. TIME TO DETECTION (MINUTES)	0-3	5-10	3-5
2. TIME TO SUPPRESSION APPLICATION			
2a. Response to Cage*	1	4	2
2b. Suit-Up Without SCBA	0.5	2	1
2c. Response to Scene*	2	3	2
2d. Set-Up at Scene**	0.5	2.5	1
2e. Scene Search	1	5	2
SUBTOTAL	4	16.5	8
3. TIME TO SUPPRESSION OR SUBSTANTIAL CONTROL	2	10	5
TOTAL	6-9	31.5-36.5	16-18

NOTES: * These times assume the cardreader system is operational and radiation checks are not done.

** If the fire involves a flammable liquid spill and the foam equipment is needed, add 2 min to subtotal for Phase 2.

Table A-14

LaSalle Manual Fire Suppression
8B2/8B1 Diesel Generator Rooms

AUTOMATIC DETECTION: Heat Detection

MANUAL DETECTION: Low Probability

MANUAL SUPPRESSION
EQUIPMENT AVAILABLE: Standpipe with preconnected 1-1/2-in. hose, multi-purpose fire extinguisher

AUTOMATIC SUPPRESSION: CO_2 System

	MIN.	MAX.	AVG.
1. TIME TO DETECTION (MINUTES)	0-5	10-15	5-10
2. TIME TO SUPPRESSION APPLICATION			
2a. Response to Cage*	1	4	2
2b. Suit-Up Without SCBA	0.5	2	1
2c. Response to Scene*	0.5	2	1
2d. Set-Up at Scene**	0.5	2.5	1
2e. Scene Search	0.5	2	1
SUBTOTAL	3	12.5	6
3. TIME TO SUPPRESSION OR SUBSTANTIAL CONTROL	1	5	2
TOTAL	4-9	27.5-32.5	13-18

NOTES: * These times assume the cardreader system is operational and radiation checks are not done.

** If the fire involves a flammable liquid spill and the foam equipment is needed, add 2 min to subtotal for Phase 2.

Table A-15

LaSalle Manual Fire Suppression
4F2 Essential Switchgear Room

AUTOMATIC DETECTION: Smoke Detection

MANUAL DETECTION: Low Probability

MANUAL SUPPRESSION
EQUIPMENT AVAILABLE: Multipurpose fire extinguisher, CO_2 hose station

AUTOMATIC SUPPRESSION: None

	MIN.	MAX.	AVG.
1. TIME TO DETECTION (MINUTES)	0-3	5-10	3-5
2. TIME TO SUPPRESSION APPLICATION			
2a. Response to Cage*	1	4	2
2b. Suit-Up Without SCBA	0.5	2	1
2c. Response to Scene*	0.5	2	1
2d. Set-Up at Scene**	0.5	2.5	1
2e. Scene Search	0.5	2	1
SUBTOTAL	3	12.5	6
3. TIME TO SUPPRESSION OR SUBSTANTIAL CONTROL	1	5	2
TOTAL	4-7	22.5-27.5	11-13

NOTES: * These times assume the cardreader system is operational and radiation checks are not done.

** If the fire involves a flammable liquid spill and the foam equipment is needed, add 2 min to subtotal for Phase 2.

Table A-16

LaSalle Manual Fire Suppression
4F3 Radiation Chemistry Offices

AUTOMATIC DETECTION: Smoke Detection

MANUAL DETECTION: Moderate Probability

MANUAL SUPPRESSION
EQUIPMENT AVAILABLE: Standpipe with preconnected 1-1/2-in. hose, multi-purpose fire extinguisher

AUTOMATIC SUPPRESSION: Partial automatic sprinklers (above ceiling)

	MIN.	MAX.	AVG.
1. TIME TO DETECTION (MINUTES)	0-3	5-10	3-5
2. TIME TO SUPPRESSION APPLICATION			
2a. Response to Cage*	1	4	2
2b. Suit-Up Without SCBA	0.5	2	1
2c. Response to Scene*	0.5	2	1
2d. Set-Up at Scene**	0.5	2.5	1
2e. Scene Search	0.5	5	2
SUBTOTAL	3	15.5	7
3. TIME TO SUPPRESSION OR SUBSTANTIAL CONTROL	1	5	2
TOTAL	4-7	25.5-30.5	12-14

NOTES: * These times assume the cardreader system is operational and radiation checks are not done.

** If the fire involves a flammable liquid spill and the foam equipment is needed, add 2 min to subtotal for Phase 2.

Table A-17

LaSalle Manual Fire Suppression
5A4 Cable Area

AUTOMATIC DETECTION: Smoke Detection

MANUAL DETECTION: Low Probability

MANUAL SUPPRESSION
EQUIPMENT AVAILABLE: Standpipes with preconnected 1-1/2-in. hose, multipurpose fire extinguisher

AUTOMATIC SUPPRESSION: None

	MIN.	MAX.	AVG.
1. TIME TO DETECTION (MINUTES)	0-5	10-15	5-10
2. TIME TO SUPPRESSION APPLICATION			
2a. Response to Cage*	1	4	2
2b. Suit-Up Without SCBA	0.5	2	1
2c. Response to Scene*	1	3	2
2d. Set-Up at Scene**	0.5	2.5	1
2e. Scene Search	1	5	2
SUBTOTAL	4	16.5	8
3. TIME TO SUPPRESSION OR SUBSTANTIAL CONTROL	2	20	5
TOTAL	6-11	46.5-51.5	18-23

NOTES: * These times assume the cardreader system is operational and radiation checks are not done.

** If the fire involves a flammable liquid spill and the foam equipment is needed, add 2 min to subtotal for Phase 2.

Table A-18

LaSalle Manual Fire Suppression
5B13-2 Cable Area

AUTOMATIC DETECTION: Smoke Detection

MANUAL DETECTION: Moderate Probability

MANUAL SUPPRESSION
EQUIPMENT AVAILABLE: Standpipe with preconnected 1-1/2-in. hose, multi-purpose fire extinguisher, CO_2 hose station

AUTOMATIC SUPPRESSION: None

	MIN.	MAX.	AVG.
1. TIME TO DETECTION (MINUTES)	0-5	10-15	5-10
2. TIME TO SUPPRESSION APPLICATION			
2a. Response to Cage*	1	4	2
2b. Suit-Up Without SCBA	0.5	2	1
2c. Response to Scene*	1	3	2
2d. Set-Up at Scene**	0.5	2.5	1
2e. Scene Search	1	5	2
SUBTOTAL	4	16.5	8
3. TIME TO SUPPRESSION OR SUBSTANTIAL CONTROL	2	10	5
TOTAL	6-11	36.5-41.5	18-23

NOTES: * These times assume the cardreader system is operational and radiation checks are not done.

** If the fire involves a flammable liquid spill and the foam equipment is needed, add 2 min to subtotal for Phase 2.

Table A-19

LaSalle Manual Fire Suppression
5C11 Turbine Building General Area

AUTOMATIC DETECTION: Smoke Detection

MANUAL DETECTION: High Probability

MANUAL SUPPRESSION
EQUIPMENT AVAILABLE: Standpipes with preconnected 1-1/2-in. hose, multipurpose fire extinguisher, CO_2 hose station

AUTOMATIC SUPPRESSION: None

	MIN.	MAX.	AVG.
1. TIME TO DETECTION (MINUTES)	1-2	4-10	2-4
2. TIME TO SUPPRESSION APPLICATION			
2a. Response to Cage*	1	4	2
2b. Suit-Up Without SCBA	0.5	2	1
2c. Response to Scene*	0.5	2	1
2d. Set-Up at Scene**	0.5	2.5	1
2e. Scene Search	0.5	4	2
SUBTOTAL	3	14.5	7
3. TIME TO SUPPRESSION OR SUBSTANTIAL CONTROL	2	10	5
TOTAL	6-7	28.5-34.5	14-16

NOTES: * These times assume the cardreader system is operational and radiation checks are not done.

** If the fire involves a flammable liquid spill and the foam equipment is needed, add 2 min to subtotal for Phase 2.

Table A-20

LaSalle Manual Fire Suppression
5C11.4 Diesel Generator Room Corridor

AUTOMATIC DETECTION: Smoke Detection

MANUAL DETECTION: Low Probability

MANUAL SUPPRESSION
EQUIPMENT AVAILABLE: Standpipe with preconnected 1-1/2-in. hose, multi-purpose fire extinguisher, CO_2 hose station

AUTOMATIC SUPPRESSION: None

	MIN.	MAX.	AVG.
1. TIME TO DETECTION (MINUTES)	0-3	5-10	3-5
2. TIME TO SUPPRESSION APPLICATION			
2a. Response to Cage*	1	4	2
2b. Suit-Up Without SCBA	0.5	2	1
2c. Response to Scene*	0.5	2	1
2d. Set-Up at Scene**	0.5	2.5	1
2e. Scene Search	0.5	2	1
SUBTOTAL	3	12.5	6
3. TIME TO SUPPRESSION OR SUBSTANTIAL CONTROL	3	8	5
TOTAL	6-9	25.5-30.5	14-16

NOTES: * These times assume the cardreader system is operational and radiation checks are not done.

** If the fire involves a flammable liquid spill and the foam equipment is needed, add 2 min to subtotal for Phase 2.

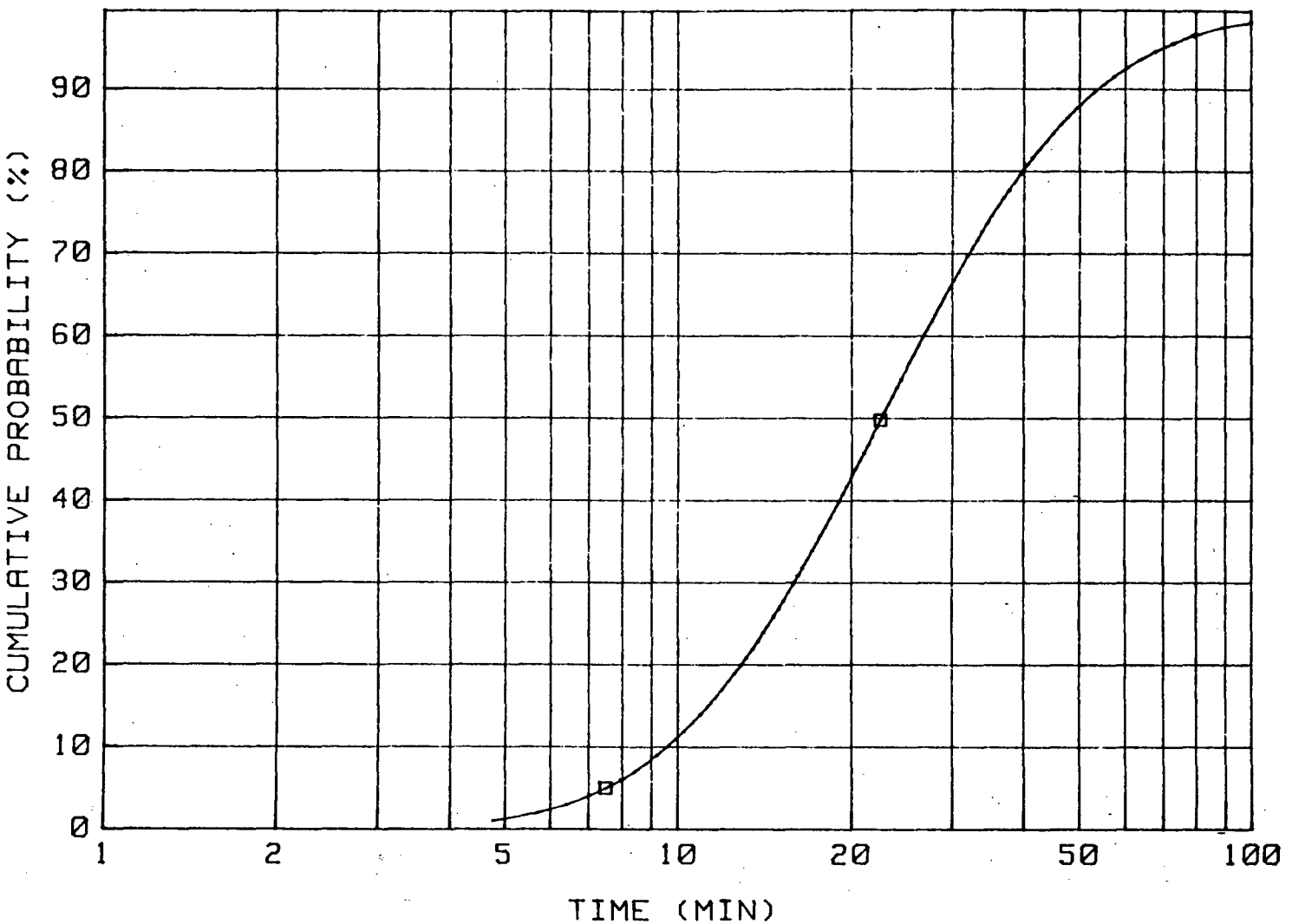

Figure A-1

Fire Area D - Reactor Building Room 3B1
Probability of Manual Suppression

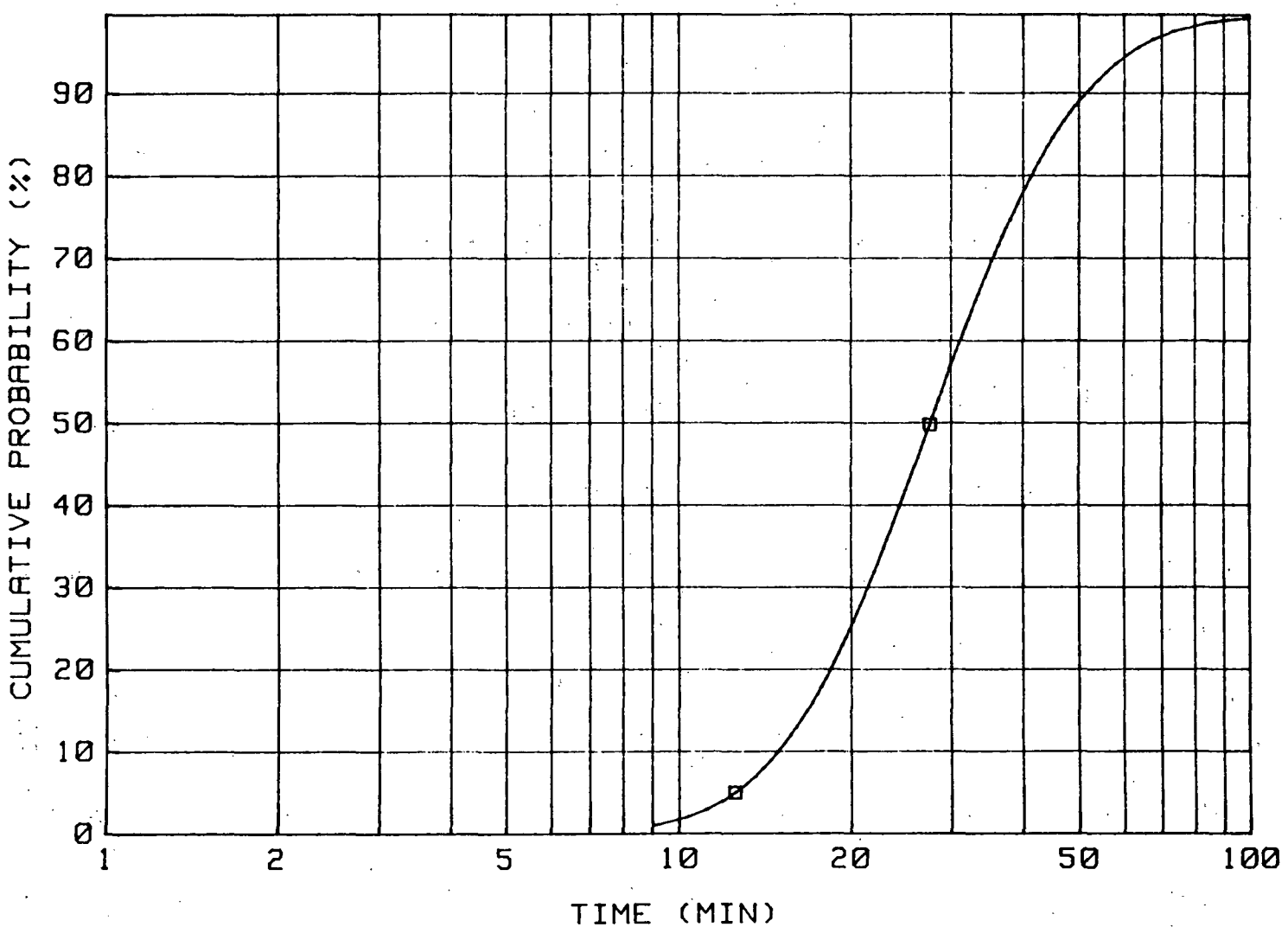

Figure A-2

Fire Area D - Reactor Building Room 3B2
Probability of Manual Suppression

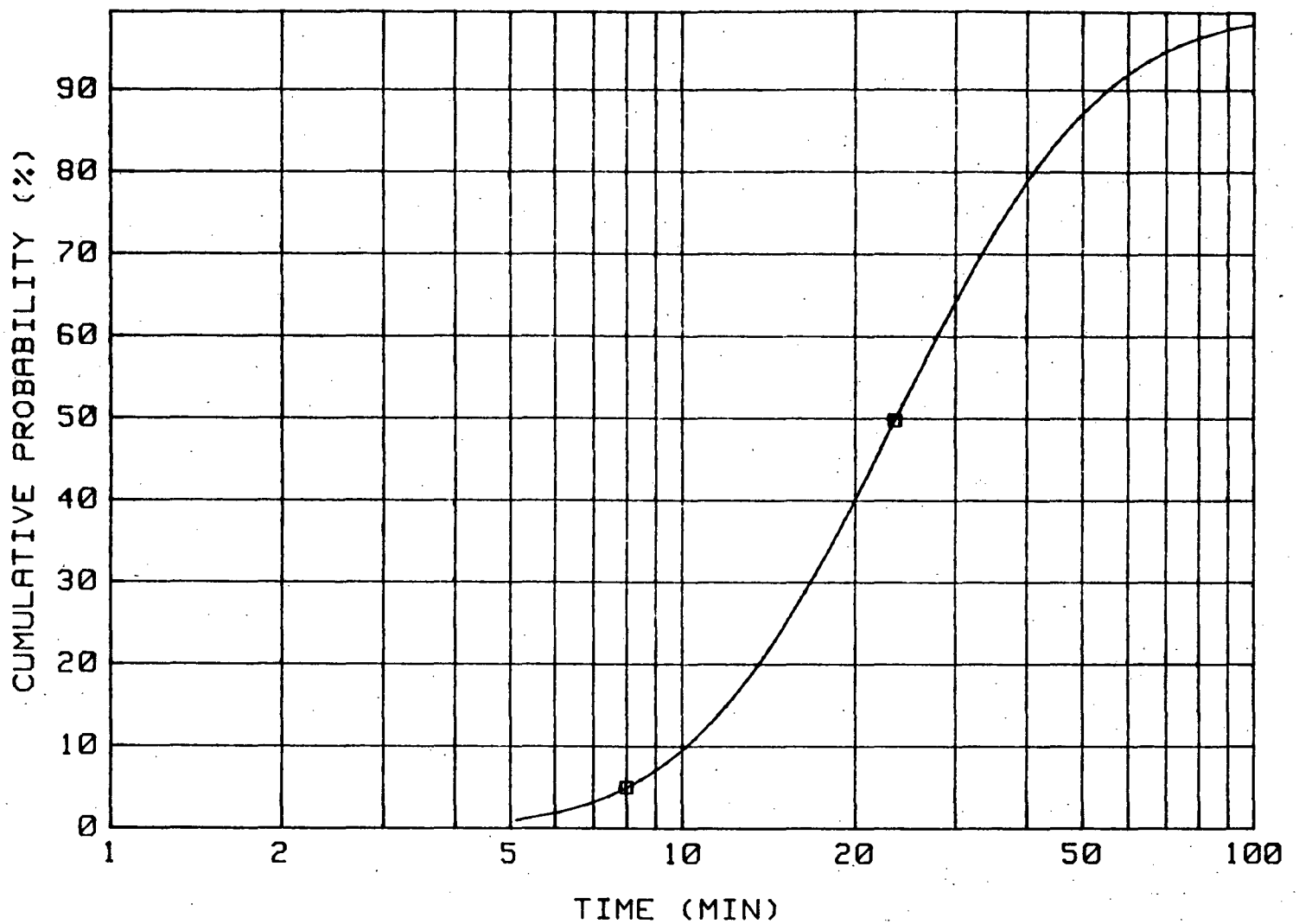

Figure A-3

Fire Area D - Reactor Building Room 3D
Probability of Manual Suppression

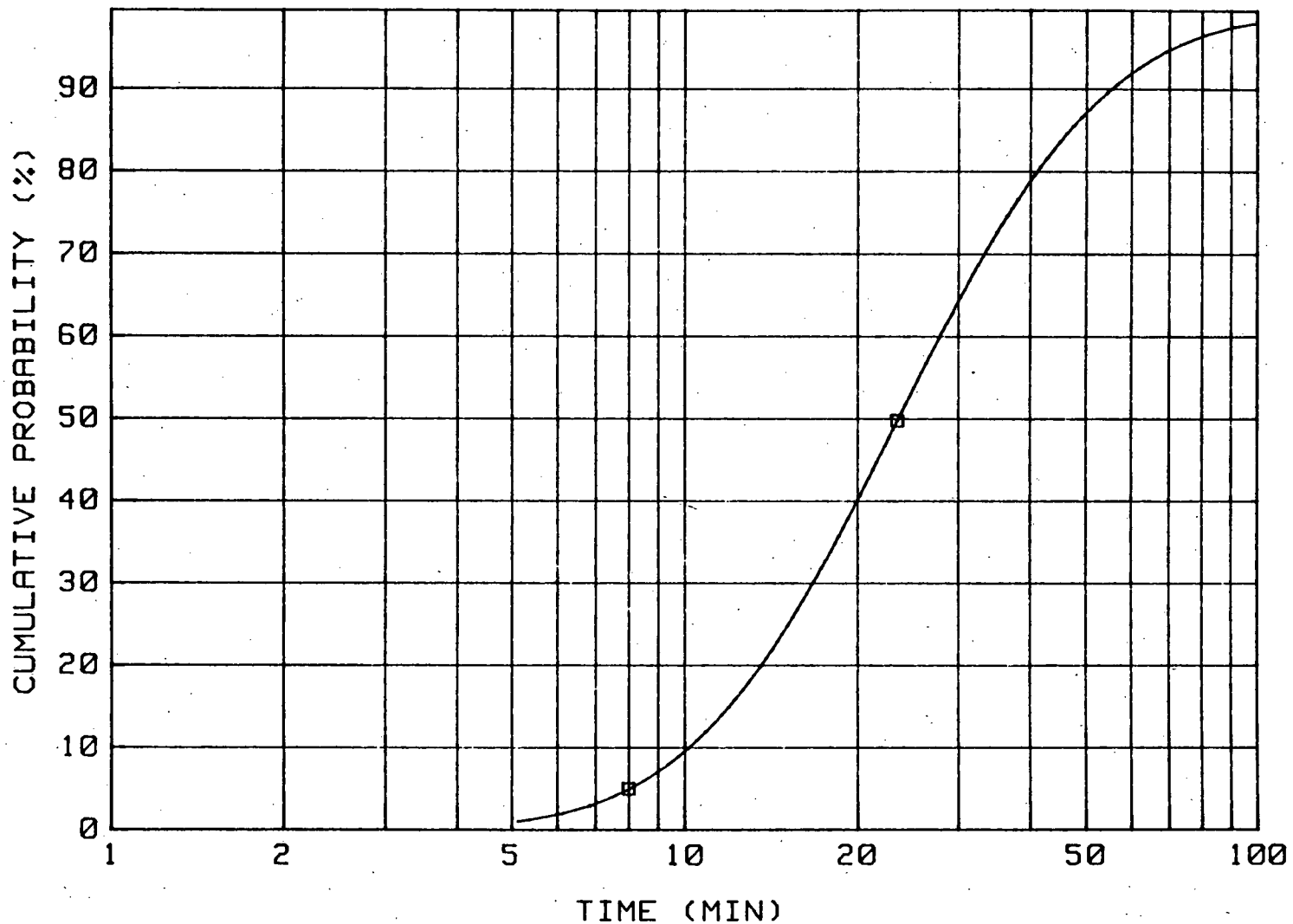

Figure A-4

Fire Area D - Reactor Building Room 3E
Probability of Manual Suppression

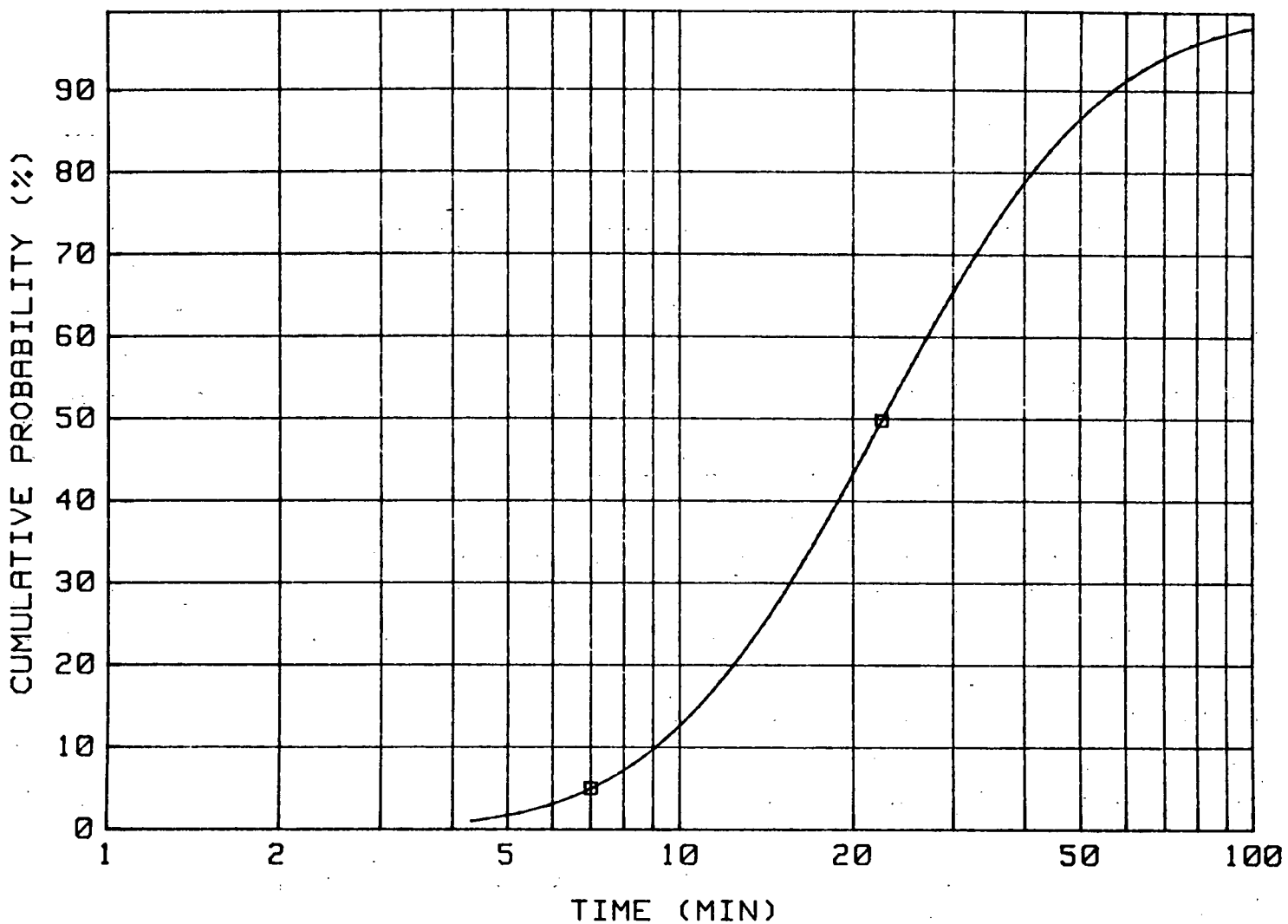

Figure A-5

Fire Area D - Reactor Building Room 3F
Probability of Manual Suppression

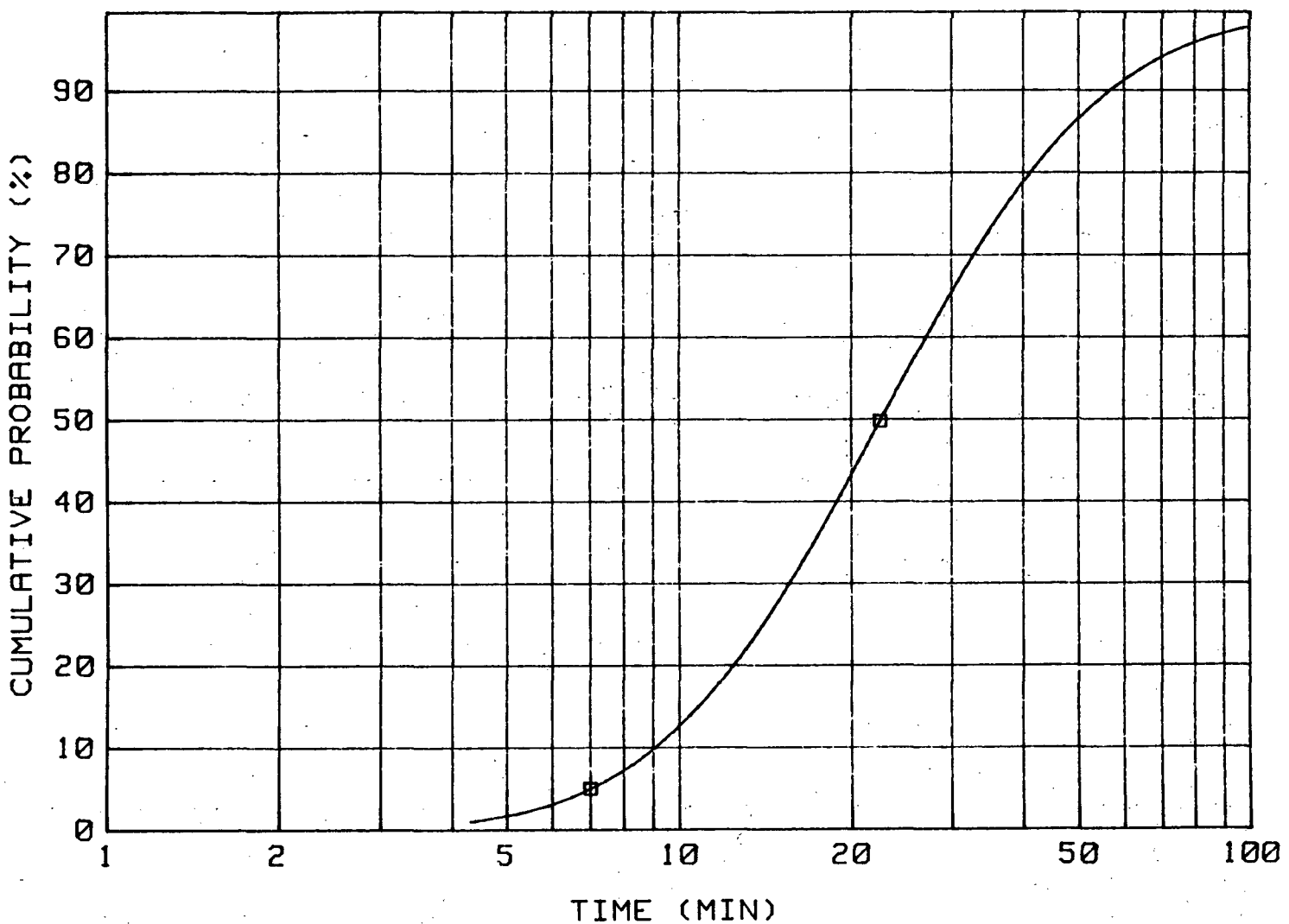

Figure A-6

Fire Area D - Reactor Building Room 3G
Probability of Manual Suppression

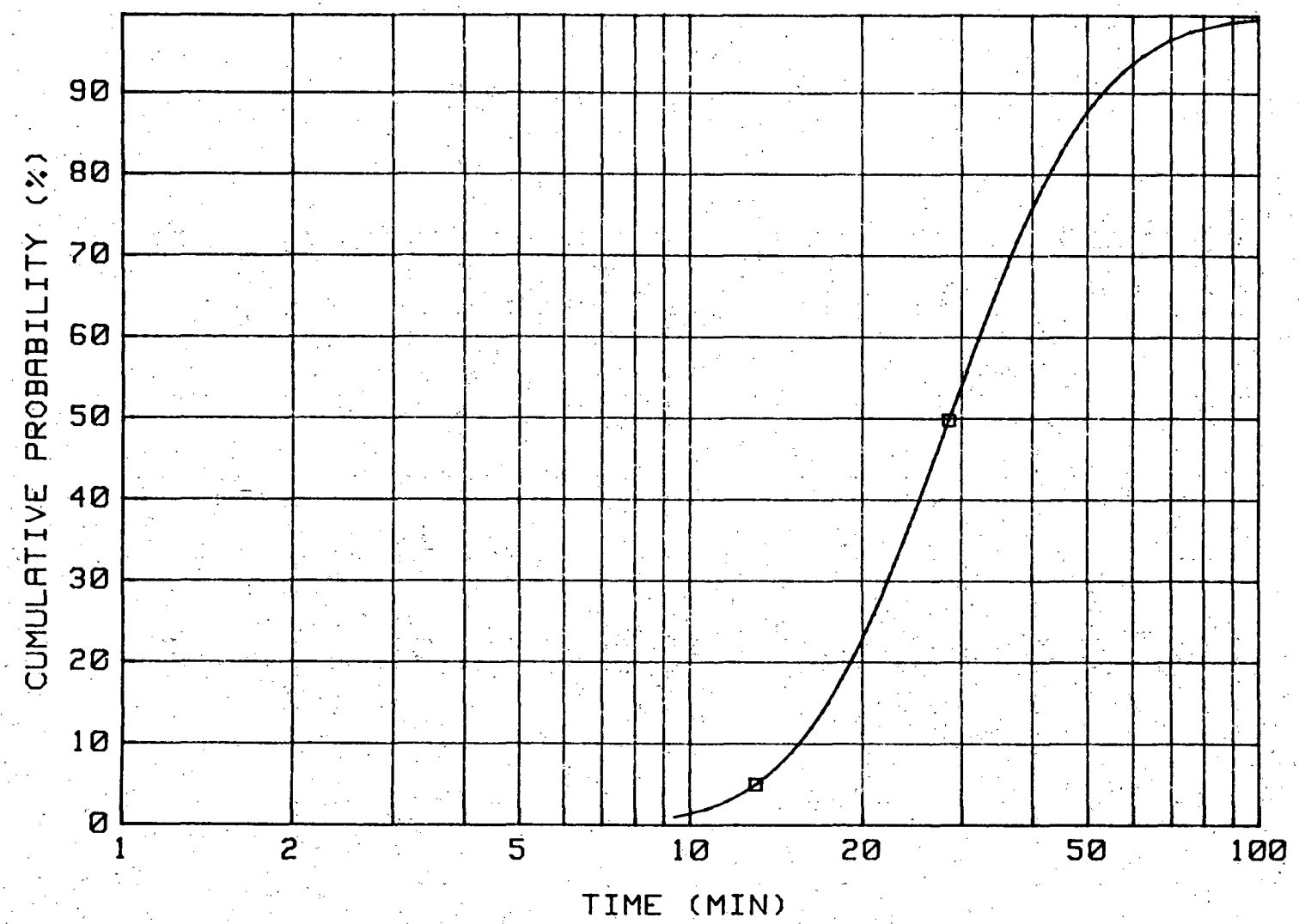

Figure A-7

Fire Area F - Room 4A, Ventilation Equipment Area
Probability of Manual Suppression

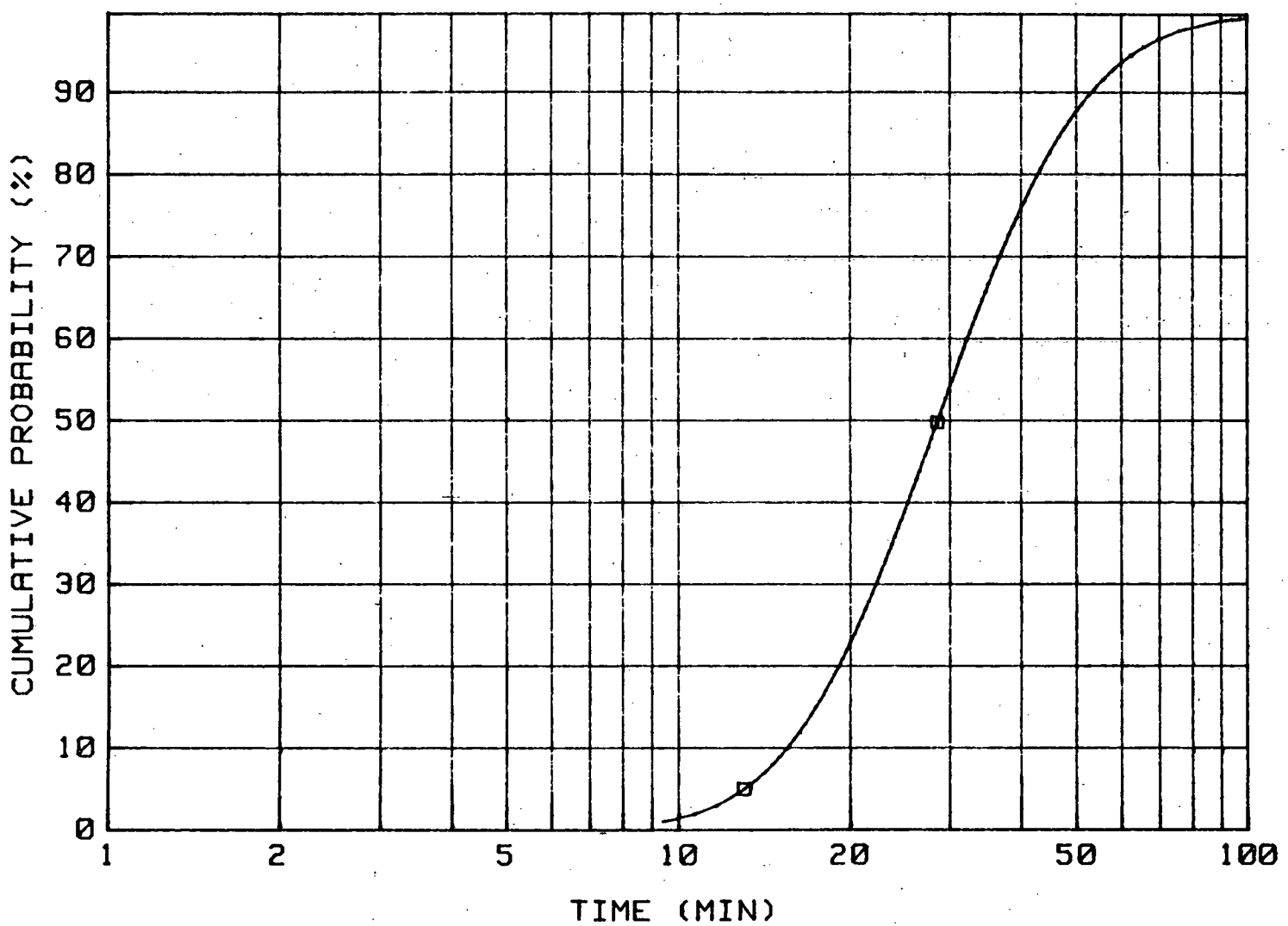

Figure A-8

Fire Area F - Room 4B, Ventilation Equipment Area
Probability of Manual Suppression

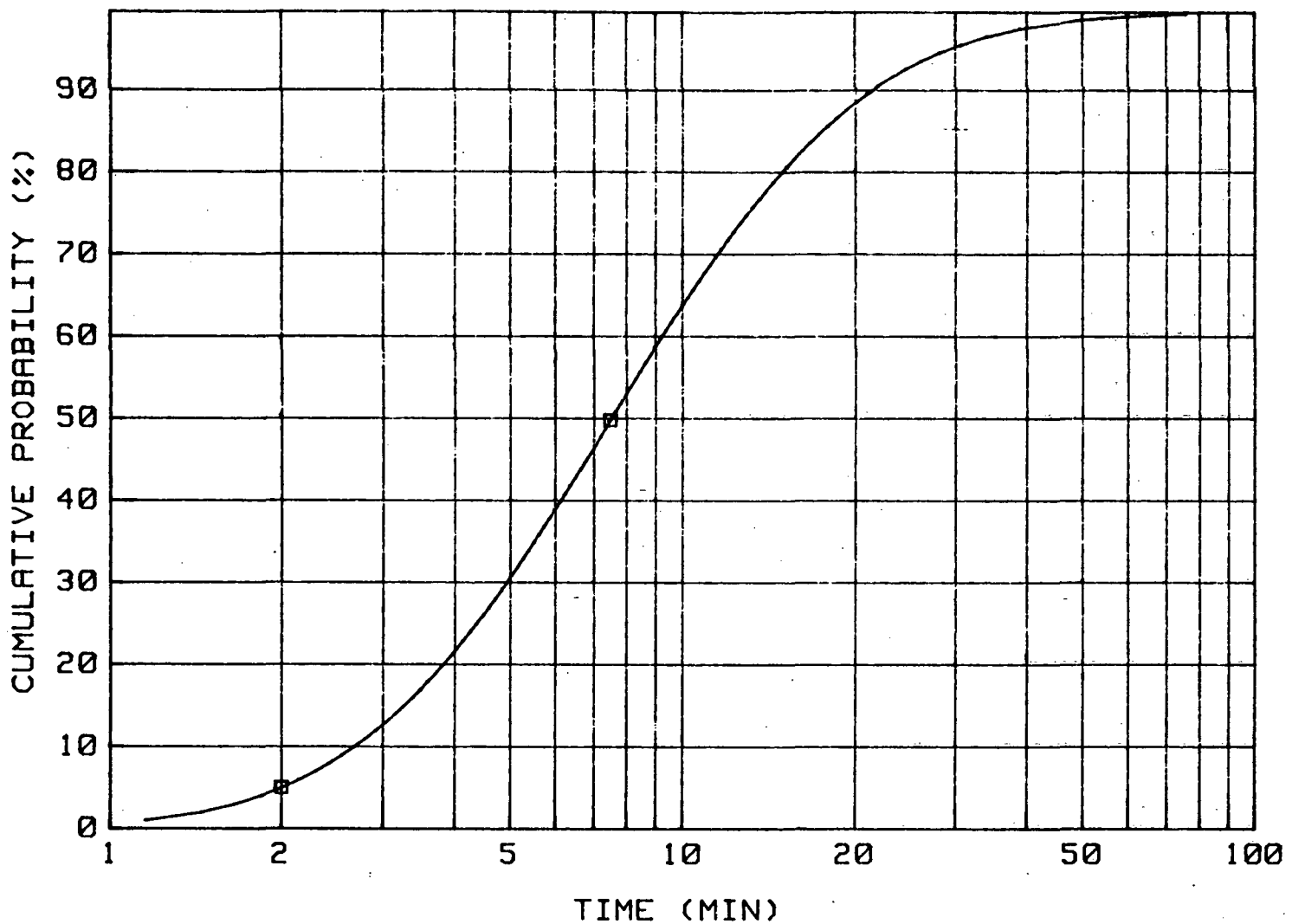

Figure A-9

Fire Area G - Room 4C1, Control Room
Probability of Manual Suppression

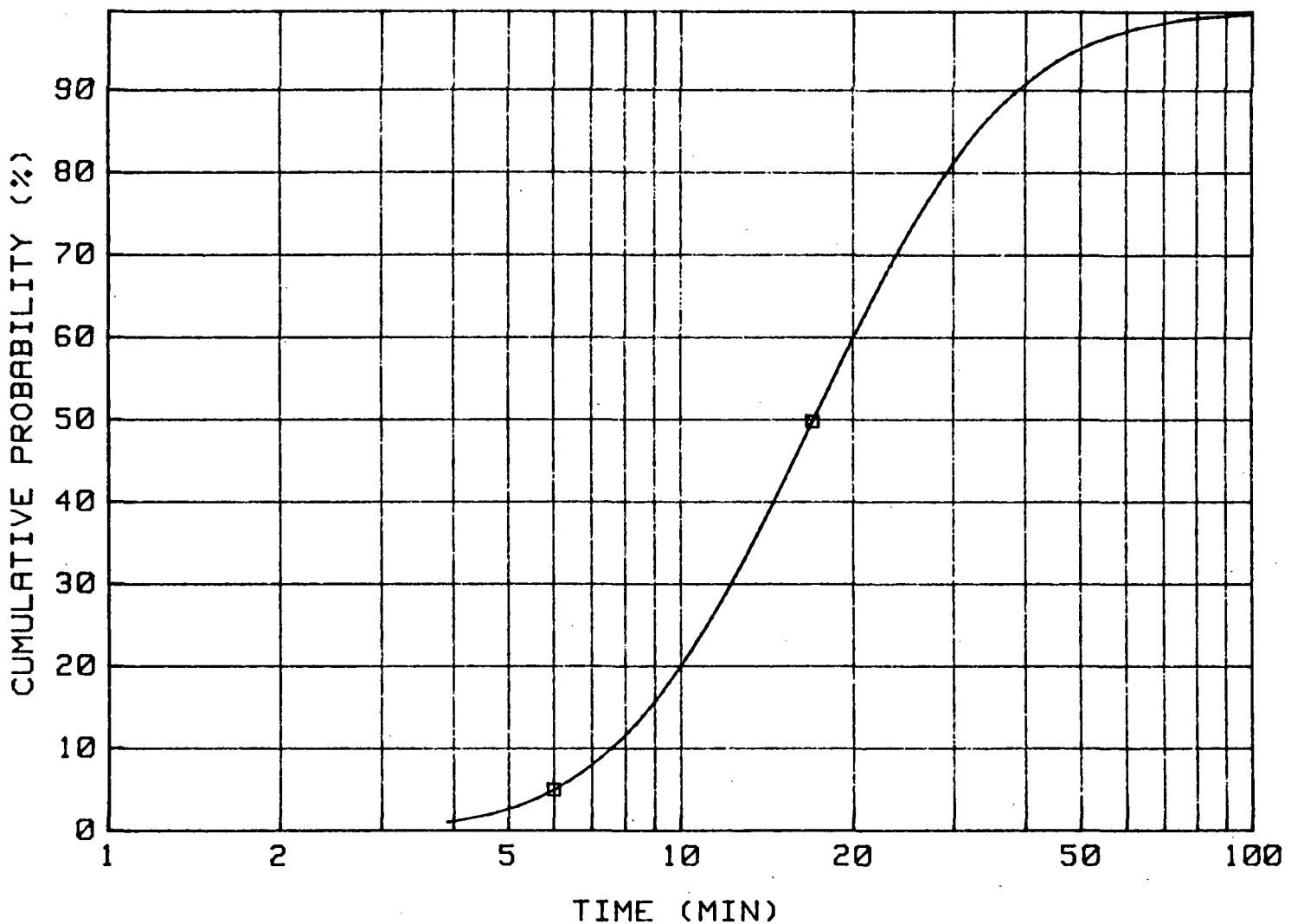

Figure A-10

Fire Area N - Room 4D2, Cable Spreading Room
Probability of Manual Suppression

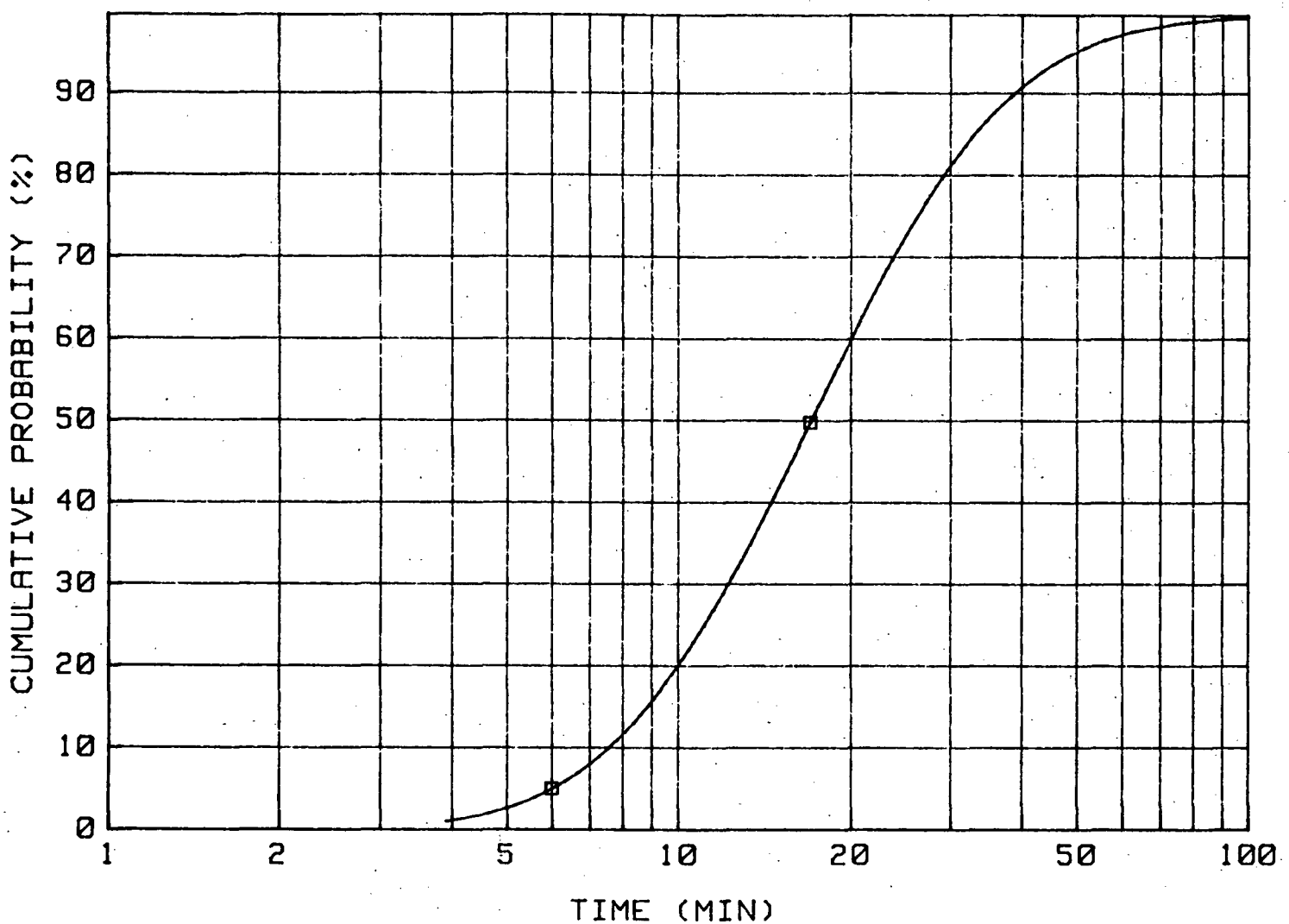

Figure A-11

Fire Area P - Room 4D4, Electric Equipment Room
Probability of Manual Suppression

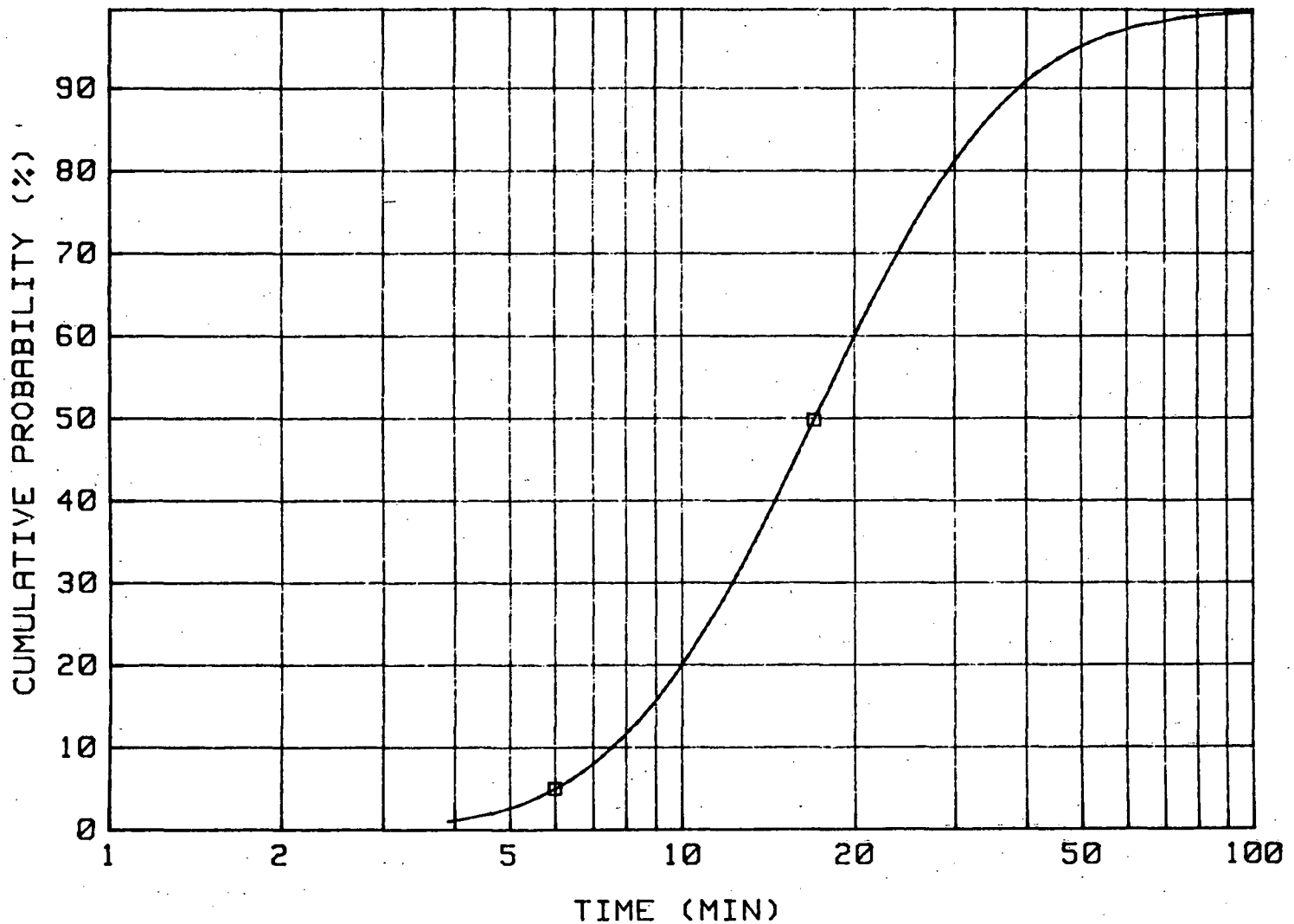

Figure A-12

Fire Area S and T - Rooms 4E2, 4E2-2; Aux Equipment Rooms
Probability of Manual Suppression

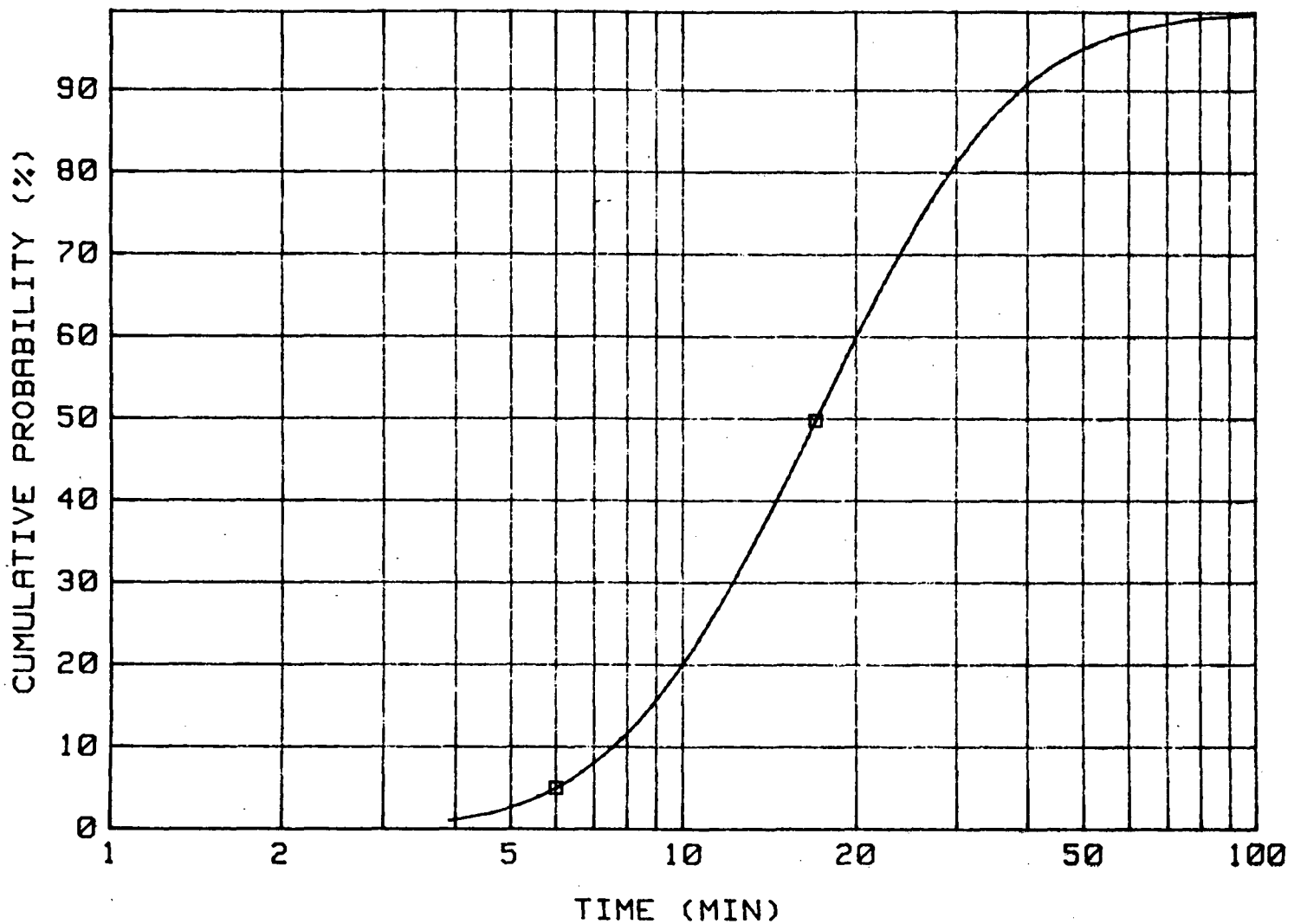

Figure A-13

Fire Areas W and AC - Rooms 4E4, 4E4-1; Unit 2, Div. 2, Essential Switchgear Room
Probability of Manual Suppression

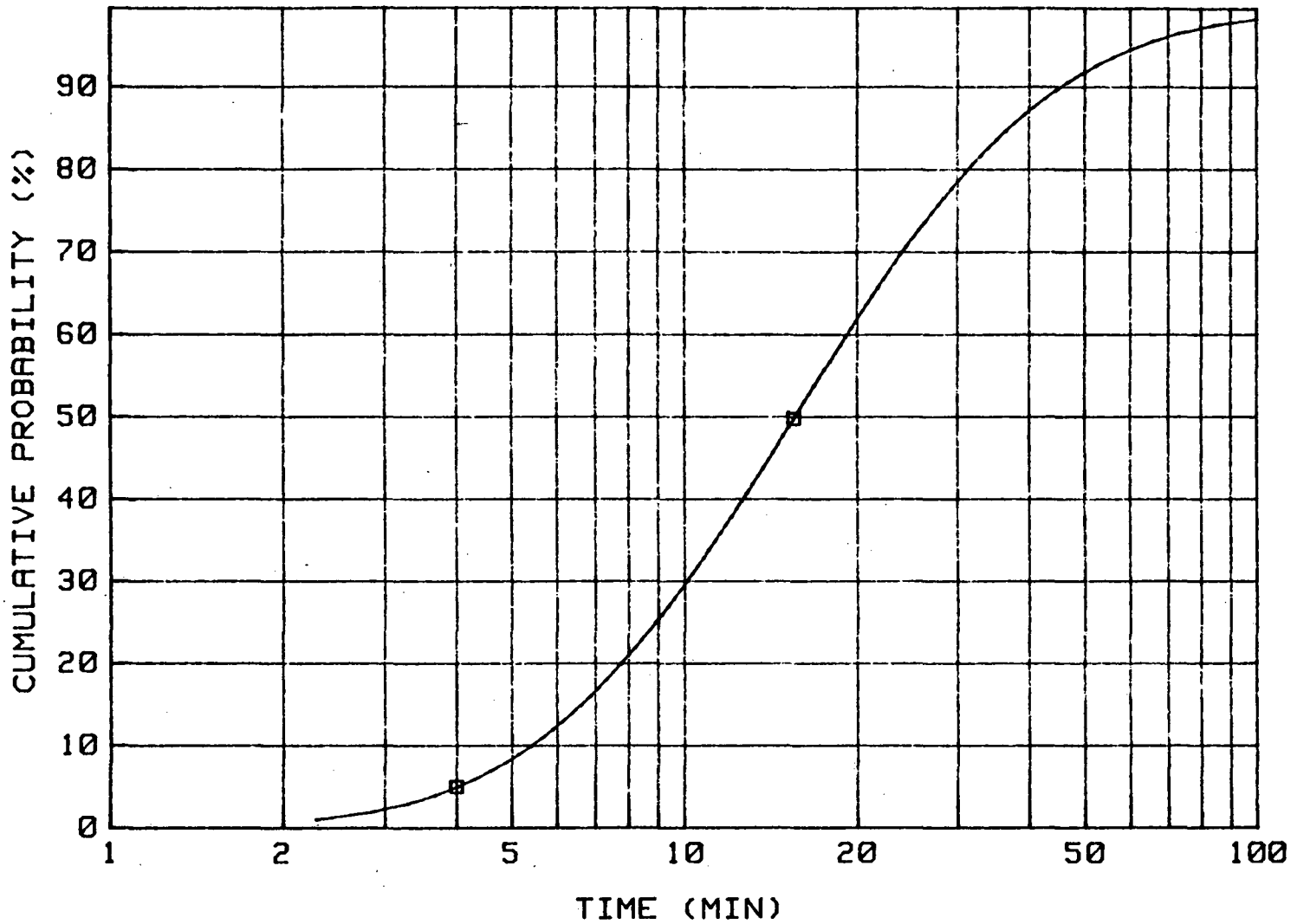

Figure A-14

Fire Areas OO and PP - Rooms 8B1, 8B2; Diesel Generator Rooms
Probability of Manual Suppression

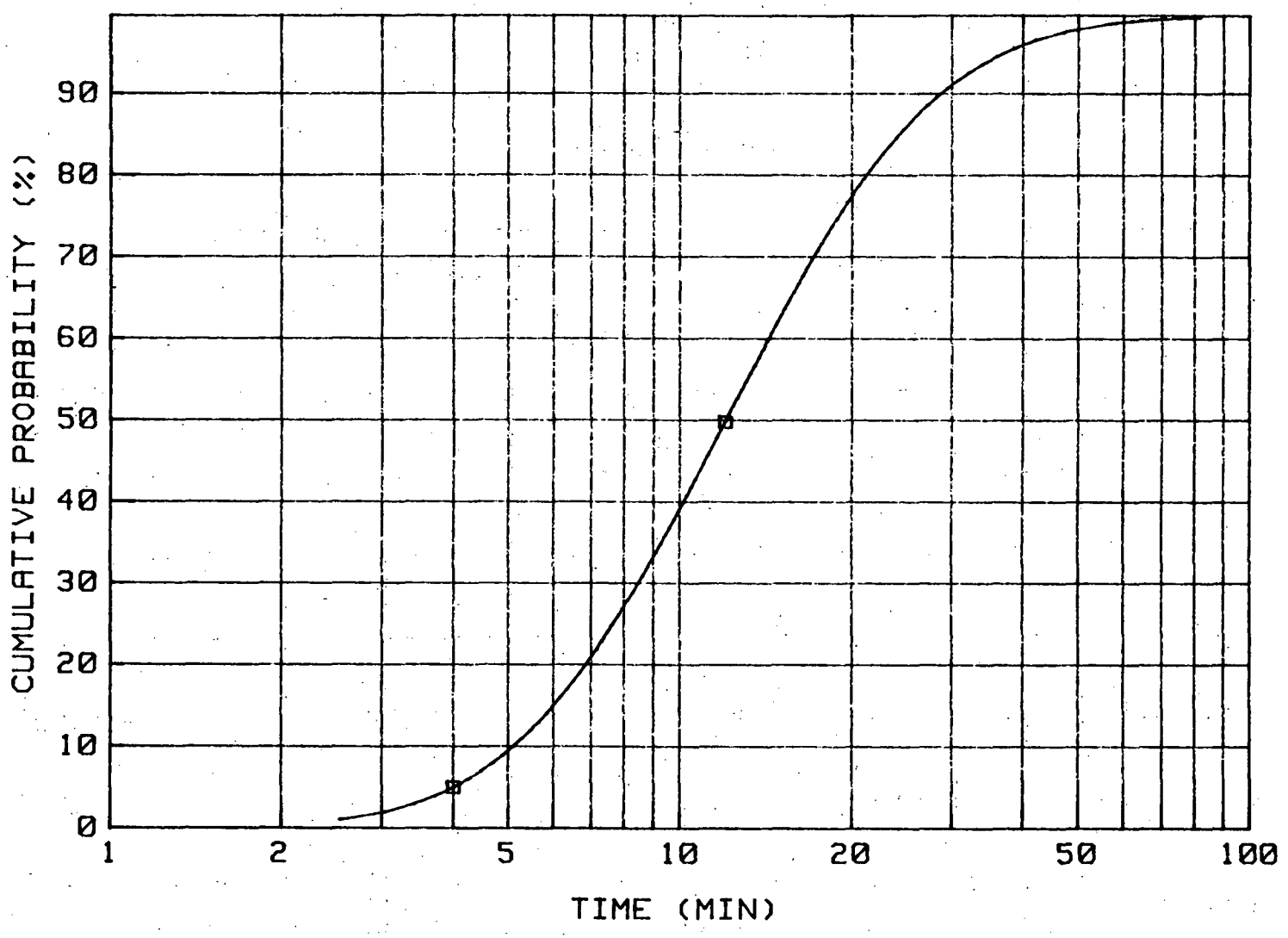

Figure A-15

Fire Area Y - Room 4F2, Unit 2, Div. 1, Essential Switchgear Room
Probability of Manual Suppression

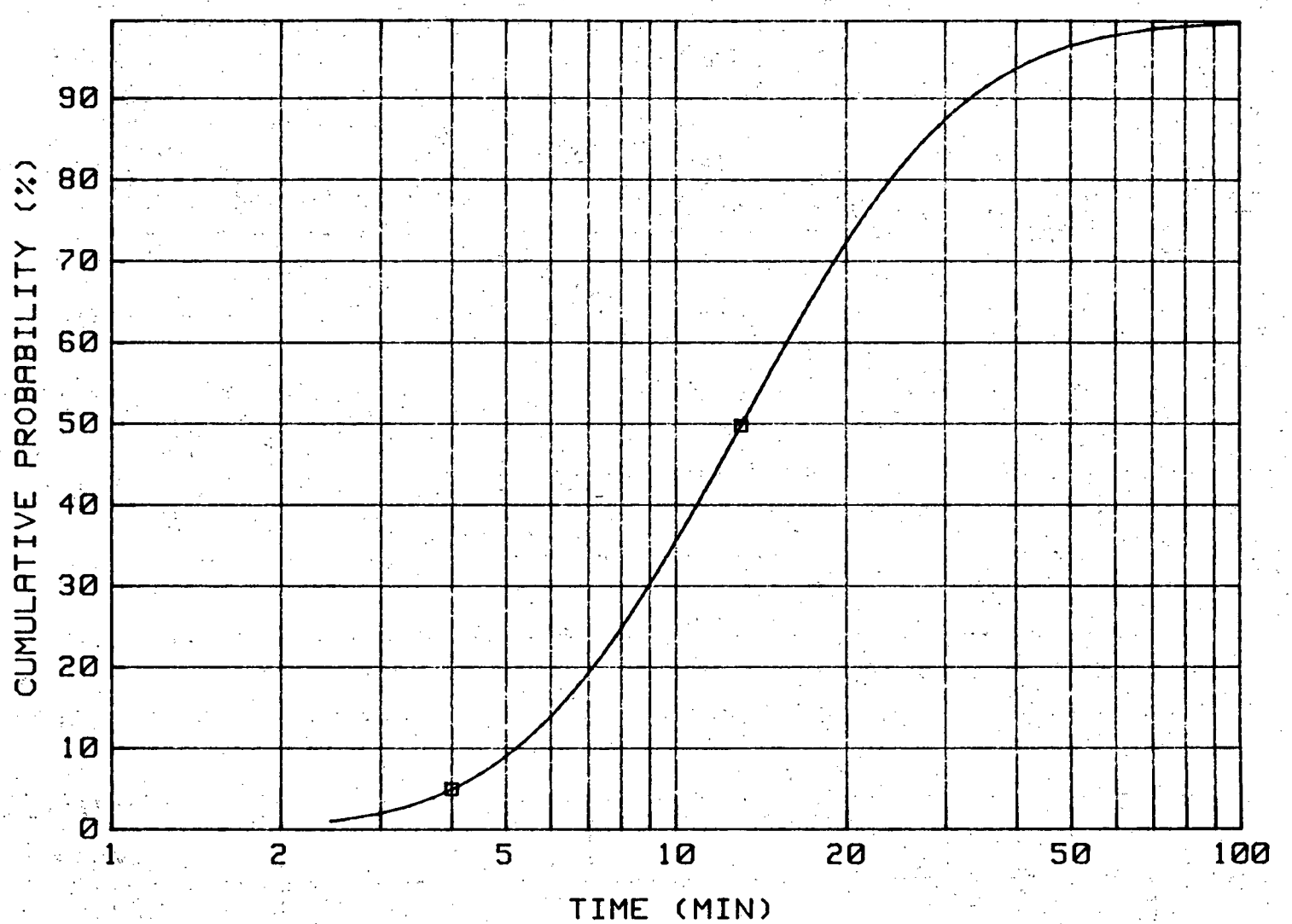

Figure A-16

Fire Area Z - Room 4F3, Aux Building Radiation Chemistry Offices
Probability of Manual Suppression

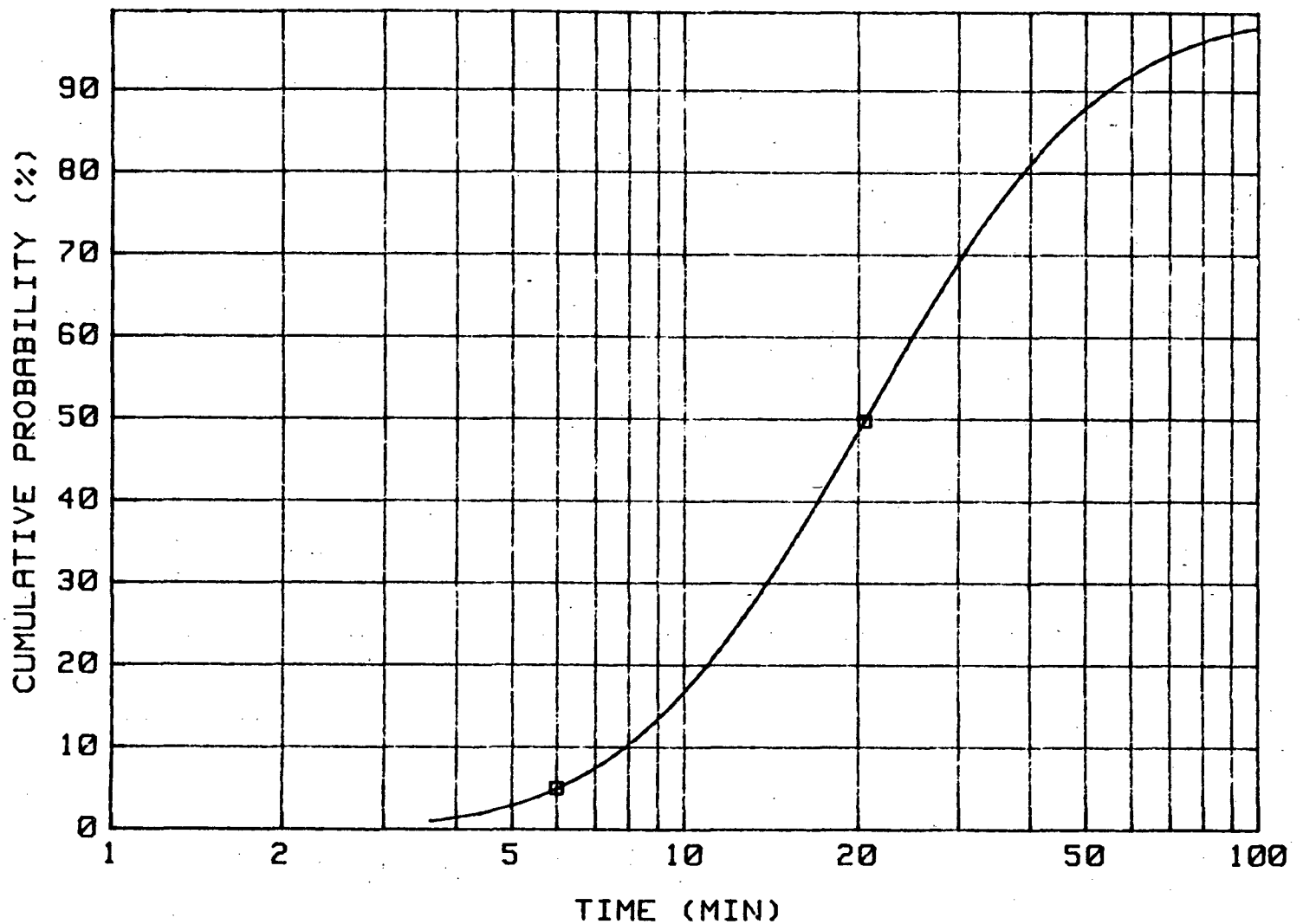

Figure A-17

Fire Area F - Room 5A4, Cable Area
Probability of Manual Suppression

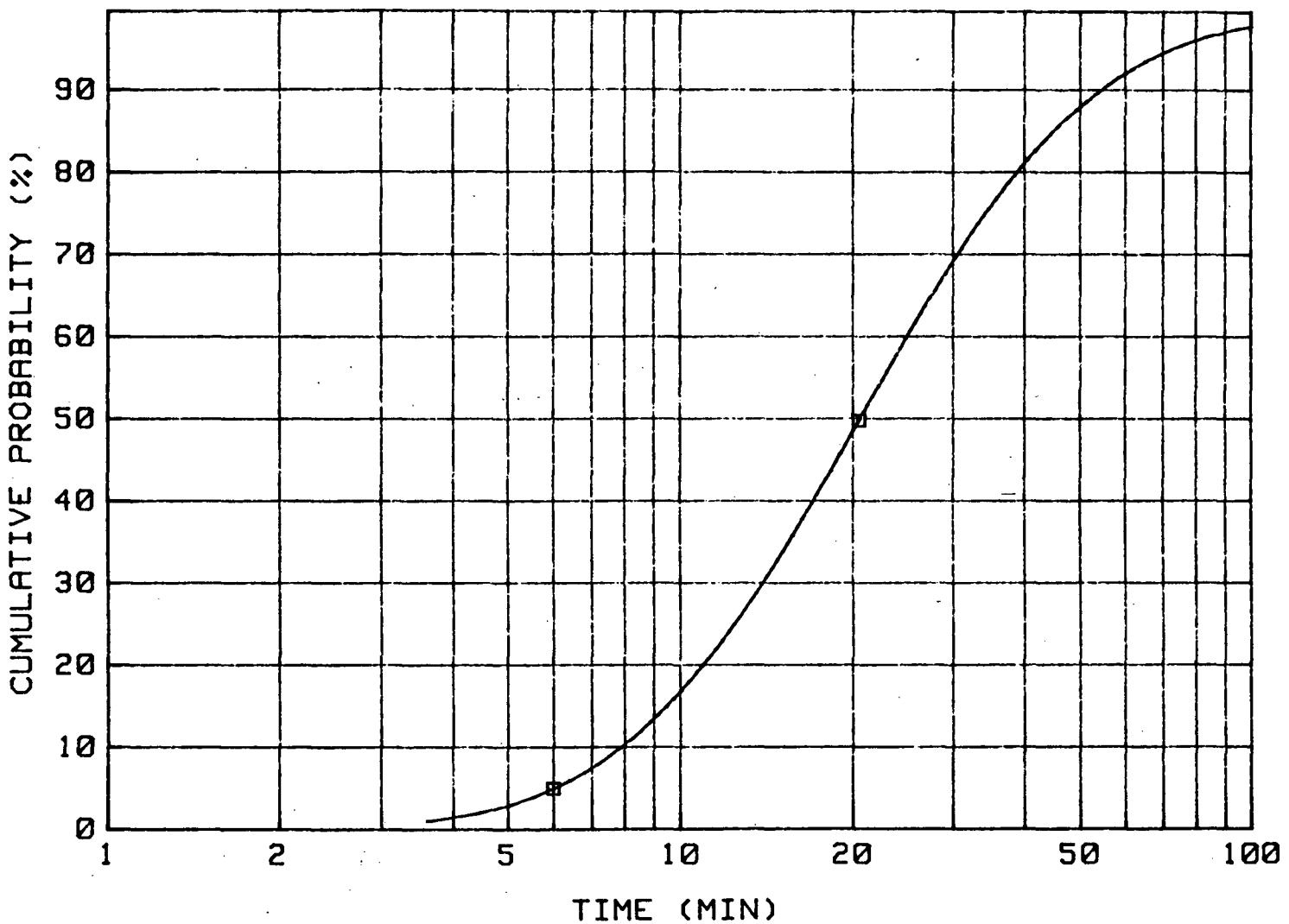

Figure A-18

Fire Area AA - Room 5B13-2, BOP Cable Area North
Probability of Manual Suppression

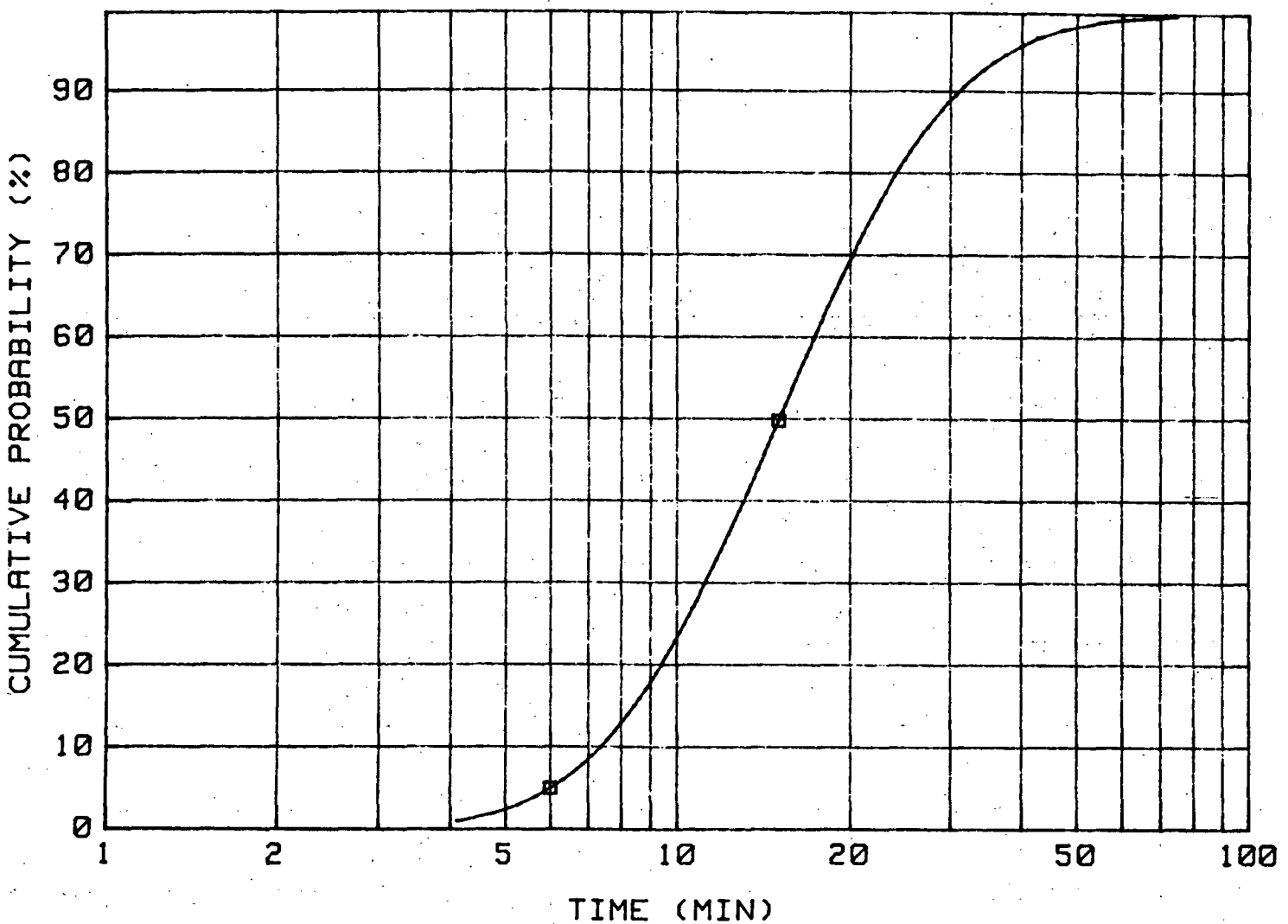

Figure A-19

Fire Area E - Room 5C11, Turbine Building General Area
Probability of Manual Suppression

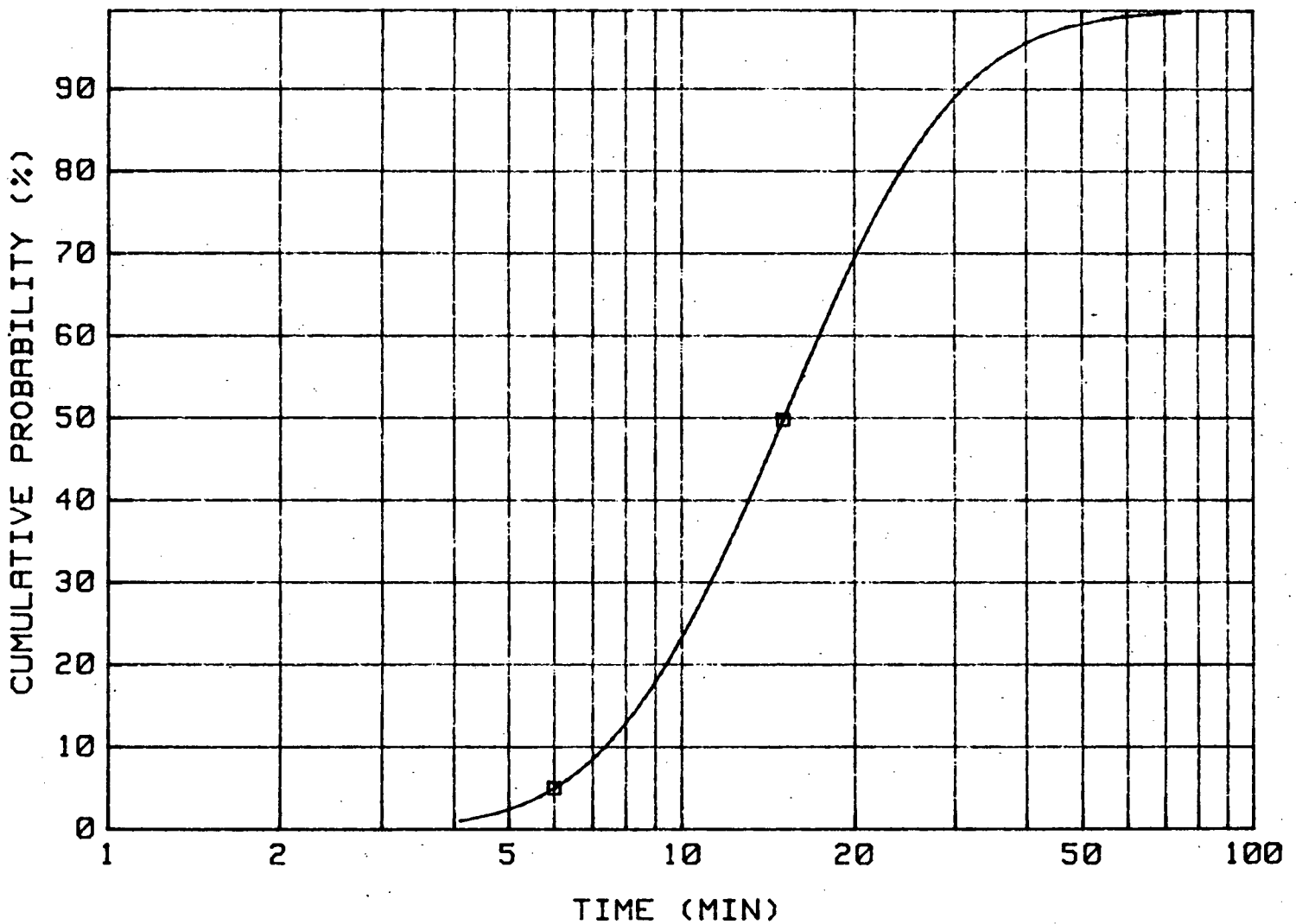

Figure A-20

Fire Area E - Room 5C11-4, Diesel Generator Room Corridor
Probability of Manual Suppression

APPENDIX B

LASALLE CRITICAL COMPONENTS BY FIRE AREA

B.0 INTRODUCTION

In this appendix, we list the major mechanical equipment in each of the dominant fire zones and describe the effect of their failure on the systems used in this analysis. In most of the rooms, the major effect of the fire is to damage or destroy the cables passing through the room. The components associated with all the cables are too extensive to list here but can be found by using the transformations in Appendix E.

1. FRZ-AA (5B13-2), Balance of Plant Cable Area, North

   4.16 KV SWGR 242X - Fails circulating water pump 2B, service water pump 2B, service water jockey pump 0B, and MCCs 232X, 232Y, and 238.

   Train A cabling passes through this room.

2. FRZ-AC (4E4-1), Southwest Corner, Unit 2 Division 2 Essential Switchgear Room

   No equipment important to safety in this room. Train B cable spreading area.

3. FRZ-E (5C11-4), Turbine Building Area Near DG Building

   4.16 KV SWGR 241X - Fails circulating water pumps 2A and 2C, service water pumps 2A and 0, SA compressor 2SA01C, and MCCs 231X, 231Y, 237X, and 237Y.

   480 VAC MCC 232Y-2 - Fails feedwater valves on pump 2B and RHR A service water strainer.

   480 VAC MCC 232B-1 - Alternate feed RPS buses A and B.

   125 VDC Battery 2A - Fails all train A DC power.

   Both train A and B offsite electrical power passes through this area.

4. FRZ-G (4C1), Control Room

   No major equipment in the control room but most control, instrumentation, and actuation circuits for pumps, valves, and other remotely operated equipment pass through one of the panels in this room.

5. FRZ-N (4D2), Unit 2 Cable Spreading Room

   No major equipment in unit 2 cable spreading room but most control, instrumentation, and actuation circuits for train B pass through this room.

6. FRZ-P (4D4), Electrical Equipment Room

   RPS 120 VAC Bus A
   RPS Motor-Generator Set Train A
   RPS 120 VAC Bus B
   RPS Motor-Generator Set Train B

Reactor scram train A or B, primary containment isolation signal and MSIV closure signal train A or B.

In addition, cabling for train A equipment passes through this room.

7. FRZ-S (4E2-1), Main Area, Unit 2 Auxiliary Equipment Room

No major components in unit 2 auxiliary equipment room but most train B control, instrumentation, and actuation circuits pass through the panels in this room.

8. FRZ-T (4E2-2), Northwest Corner, Unit 2 Auxiliary Equipment Room

No major equipment in northwest corner of unit 2 auxiliary equipment room but train A control, instrumentation, and actuation circuits pass through the panels in this room.

9. FRZ-W (4E4), Unit 2 Division 2 Essential Switchgear Room

6.9 KV SWGR 252 - Fails all train B non-safety AC power.

4.16 KV SWGR 242Y - Fails all train B AC safety power.

480 VAC SWGR 236X - Fails DG "2A" cooling water pump, RHR service water pump 2C, SBGT system.

480 VAC MCC 236X-2 - Fails RPS train B M/G set, Wetwell venting.

480 VAC MCC 236X-3 - Fails AC charging to train B 125 VDC power.

480 VAC MCC 236Y - Fails RHR service water pump 2D, 236Y-1,2,and 3 (RHR train B and C, Drywell venting, RCIC and RBCCW isolation, feedwater turbine auxiliaries, SBLC train B).

125 VDC Battery 2B - Loss of all train B DC power.

125 VDC Bus 2B - Loss of all train B DC power.

125 VDC Bus 2B Charger - Loss of AC charging for DC train B, delayed loss of DC train B power.

125 VDC Bus 212X - Fails feedwater pump 2B control, DC power to train A non-safety systems.

125 VDC Bus 212Y - Fails ADS train B, DC power to train B safety equipment.

Equipment in this room supplies train B electrical power.

10. FRZ-Y (4F2), Unit 2 Division 1 Essential Switchgear Room

6.90 KV SWGR 251 - Fails all train A non-safety AC power.

4.16 KV SWGR 241Y - Fails all train A safety AC power.

480 VAC SWGR 235X - DG "0" cooling water pump, RHR service water pump 2A, 235X-1,2, and 3 (-1 = RCIC isolation, Wetwell venting, Shutdown cooling isolation).

480 VAC MCC 235X-2 - Fails RPS M/G set train A.

480 VAC MCC 235X-3 - Fails 125 VDC and 250 VDC charging.

480 VAC SWGR 235Y - Fails RHR service water pump 2B, 235Y-1,2,and 3 (RHR train A, LPCS, SBLC train A, Drywell venting).

125 VDC Bus 2A - Loss of all 125 VDC to train A systems.

125 VDC Battery Charger 2A - Loss of AC charging to train A 125 VDC, delayed loss of train A DC.

125 VDC Bus 211X - Loss of 125 VDC to non-safety systems, train A.

125 VDC Bus 211Y - Loss of 125 VDC to safety systems, train A.

250 VDC Battery 2 - Loss of all 250 VDC, fails RCIC system.

250 VDC Bus 2 - Loss of all 250 VDC, fails RCIC system.

250 VDC Battery Charger - Loss of AC charging to 250 VDC, delayed loss of 250 VDC.

250 VDC MCC 221X - No important safety equipment.

Equipment in this room supplies train A electrical power.

11. FRZ-Z (4F3), Auxiliary Building Rad Chemistry Offices

No major equipment important to safety in this room but train A control, instrumentation, and actuation cabling pass through this room.

APPENDIX C

GENERIC FIRE EVENT DATA

C.0 INTRODUCTION

This appendix contains a listing and short description of fires which have occurred in nuclear power plants thru June 1985. The fires are grouped into the following eight areas corresponding to the general locations used in this analysis for the LaSalle plant: (1) control room, (2) cable spreading room, (3) diesel generator room, (4) electrical switchgear room, (5) battery room, (6) reactor building, and (7) turbine building, and (8) auxiliary building. This information is used in Section 3.3 of the main report to calculate the fire initiating event frequency for each location.

Appendix C
LaSalle Fire Event Data Table

Auxiliary Building Fires

Plant Name	Date of Occurrence	Plant Status	Fire Type	Remarks
San Onofre 1	2/7/68	Power Operation	Cable	Thermally overloaded 480 V cables caught fire--55 cables damaged.
San Onofre 1	3/9/68	Power Operation	Cable	Thermally overloaded cables in switchgear room.
Palisades	6/25/71	Cold Shutdown	Air Dryer Filter	Low flow of air through air dryer resulted in temperature buildup and ignition of filter.
LaCrosse	7/15/72	Power Operation	Circulation Pump	Oil on pump lagging ignited by hot pump casing.
Turkey Point 3	12/16/72	Power Operation	Battery Charger	Battery charger overheated and a small fire occurred in the transformer winding insulation.
Robinson 2	4/19/74	Power Operation	Expansion Joint	Cigarette or welding slag from construction workers ignited combustible expansion joint material.
Robinson 2	4/19/74	Power Operation	Expansion Joint	Same type of event as previous event--occurred 1 week apart.

Appendix C
LaSalle Fire Event Data Table

Auxiliary Building Fires (Continued)

Plant Name	Date of Occurrence	Plant Status	Fire Type	Remarks
Turkey Point 3	5/75	Power Operation (100%)	Battery Charger	Transformer overheated igniting insulation. Similar to previous event on 12/14/72.
Millstone 2	3/24/76	Hot Shutdown	Motor Control Center	Fire resulted from arcing of a supply lead. Extinguished by de-energizing MCC.
Dresden 2	4/76	Cold Shutdown	Circuit Breaker	ECCS Jockey Pump control feed breaker caught fire from a burned-out contacter coil.
Fitzpatrick	6/11/76	Power Operation (93%)	Circuit Breaker	Overload in HPCI valve circuit breaker. Extinguished by de-energizing breaker.
Millstone 2	11/15/76	Hot Shutdown	Relay--MCC	Relay fire in motor control center.
Pilgrim 1	3/77	Hot Shutdown	Circuit Breaker	Circuit breaker under-voltage coil burnt due to high floating charge on station battery.
Fitzpatrick	4/4/77	Power Operation (88%)	Circuit Breaker	Coil failed by fire in HPCI test valve breaker and extinguished by de-energizing. Similar to 7/28/75 event.

Appendix C
LaSalle Fire Event Data Table

Auxiliary Building Fires (Continued)

Plant Name	Date of Occurrence	Plant Status	Fire Type	Remarks
Arnold	5/7/77	Refueling Outage	Circuit Breaker	Breaker relay failed, burning open and starting phase burner material above it on fire.
Salem 1	6/30/77	Power Operation	Relay--Cabinet	Fire detection instrumentation panel fire due to relay failure.
Unknown	4/13/78	Power Operation	Circuit Breaker--MCC	Failure breaker contact due to improper maintenance--occurred in motor control center.
Robinson 2	7/16/78	Power Operation	Battery	Resistance heating of terminal connection ignited plastic tops of two cells of a battery.
Unknown	7/27/78	Power Operation	Battery Terminal	Defective terminal or connections not secured.
Arkansas Nuclear One 1	8/16/78	Cold Shutdown	Pump Motor	LPSI pump motor on fire (being used for shutdown cooling) due to incorrect installation of motor bearings resulting in shorting of rotor with the stator.
Salem 1	1/79	Power Operation (95%)	Transformer	Moisture in the windings resulted in a short and subsequent fire.

Appendix C
LaSalle Fire Event Data Table

Auxiliary Building Fires (Continued)

Plant Name	Date of Occurrence	Plant Status	Fire Type	Remarks
Palisades	4/4/79	Power Operation (100%)	Battery	Battery burst due to internal explosion of hydrogen ignited by a test lead being used to measure voltage.
San Onofre 1	11/27/79	Power Operation (100%)	Switchgear	Rodents shorted two phases of a 480-V bus in the switchgear room.
Hatch 2	4/80	Cold Shutdown	Cable	A loose connection resulted in a wire of an RPS motor generator set breaker burning.
Unknown BWR	4/15/80	Power Operation	Bus	Fire involving supply bus occurred in switchgear room.
Peach Bottom 1	6/3/80	Power Operation (100%)	Transformer	A filtering capacitor in a vital bus transformer caught fire damaging the transformer.
Unknown PWR	7/6/80	Power Operation	Circuit Breaker	Circuit breaker caught fire when it failed to close properly because contacts were out of adjustment.
Unknown PWR	10/2/80	Power Operation	Valve Motor	Air sample inlet valve motor issued smoke. Power was removed from motor.

Appendix C
LaSalle Fire Event Data Table

Auxiliary Building Fires (Continued)

Plant Name	Date of Occurrence	Plant Status	Fire Type	Remarks
Trojan	12/31/80	Power Operation (100%)	Circuit Breaker	Breaker stab misaligned causing ignition of plastic dust collector by arcing.
Palisades	1/24/81	Power Operation (98%)	Pump Motor	Component cooling water pump motor caught fire due to bearing failure from loss of lubricating oil.
San Onofre 1	7/17/81	Cold Shutdown	Gas Decay Tank	Explosion of H_2 in recombiner.
Indian Point 2	8/10/81	Power Operation (100%)	Pump Motor	Short circuit within SI pump caused fire and an overload trip of its supply breaker.
North Anna 1	11/11/81	Power Operation	Pump	Main feedwater pump fire.
Hatch 1	11/23/81	Cold Shutdown	Relay	Insulation breakdown caused fire in a reactor low-low RPS relay.
Point Beach 1	10/15/82	Power Operation (78%)	Circuit	Supply breaker for MG set caught fire.

Appendix C
LaSalle Fire Event Data Table

Auxiliary Building Fires (Continued)

Plant Name	Date of Occurrence	Plant Status	Fire Type	Remarks
Salem 1	11/9/82	Cold Shutdown	Relay	Relay failure resulted in a fire in a fire detection instrumentation panel. Fire detectors for switchgear rooms, battery room, and DG area were rendered inoperable.
Brunswick 1	11/27/82	Power Operation (68%)	Battery Charger	Resistor on charger amplifier board opened causing a voltage increase and capacitor failure.
Oconee 2	2/3/83	Power Operation (100%)	Pump Motor	Loss of lubrication oil resulted in high bearing temperature and smoke.
Brunswick 1	4/26/83	Refueling	Transformer	Following a loss of offsite power, a fire occurred in a transformer between emergency buses.
Oconee 3	5/25/83	Power Operation (100%)	Cable and Conduit	Welding operation started a fire in conduit surrounding a cable (letdown valve).

Appendix C
LaSalle Fire Event Data Table

Auxiliary Building Fires (Concluded)

Plant Name	Date of Occurrence	Plant Status	Fire Type	Remarks
Salem 2	6/20/83	Cold Shutdown	Transformer	Transformer breaker tripped on overcurrent and was reclosed. Fire occurred immediately thereafter.
Peach Bottom 1	9/9/83	Power Operation (100%)	Control Panel	Water entered a control room ventilation chiller control panel shorting motor starter contacters.
Yankee Rowe	8/2/84	Power Operation (100%)	Circuit Breaker	High resistance in the main disconnecting contacts of the center phase of the breaker caused an arc to propagate to outside phases.

Appendix C
LaSalle Fire Event Data Table

Reactor Building Fires

Plant Name	Date of Occurrence	Plant Status	Fire Type	Remarks
Quad Cities 1	12/10/72	Power Operation	Oil, Insulation	A small open flame was observed within a RHR service-water pump housing. Fire was set by welding sparks on oil-soaked insulation.
Peach Bottom 1	12/22/72	Power Operation		The motor on a residual heat removal pump burst into flames due to insufficient lubrication to the lower bearing.
Monticello	5/15/74	Hot Shutdown	Hydrogen	An off-gas ignition occurred resulting in the rupture of both air ejector discharge line rupture discs.
Dresden 3	11/15/74	Power Operation	Hydrogen	An off-gas explosion occurred when the 3A recombiner outlet valve was opened.
Oconee 2	1/31/75	Hot Shutdown	Oil	A small oil fire occurred underneath a reactor coolant pump motor stand.
Brunswick 2	4/14/77	Power Operation	Hydrogen	A hydrogen flame was in the off-gas system burning at the flow orifice or in the jet air ejector.

Appendix C
LaSalle Fire Event Data Table

Reactor Building Fires (Continued)

Plant Name	Date of Occurrence	Plant Status	Fire Type	Remarks
Brunswick 2	6/15/77	Power Operation	Hydrogen	Following an off-gas over-pressurization, a hydrogen fire was detected downstream of the steam jet air ejectors.
Unknown BWR	2/10/78	Power Operation	Electrical	Smoke was noticed coming from a supply breaker.
Indian Point 2	9/4/79	Power Operation	Oil, Insulation	A fire occurred in the reactor coolant pump tube. Insulation was saturated with oil and ignited.
Robinson 2	9/30/79	Power Operation	Oil	Lagging fire on cold leg piping. Fire caused by lubricating oil leak.
San Onofre 1	?/16/80	Hot Shutdown	Oil, Insulation	Oil from leaking reactor coolant pump oil filter came in contact with the hot pump casing and ignited.
Nine Mile Point 1	4/22/80	Power Operation	Oil	Fire resulted from lube oil that leaked from a main turbine shaft-driven feed water pump.

Appendix C
LaSalle Fire Event Data Table

Reactor Building Fires (Concluded)

Plant Name	Date of Occurrence	Plant Status	Fire Type	Remarks
Pilgrim	2/24/81	Power Operation	Insulation	A fire was ignited by welded sparks falling on temporary foam rubber insulation.
Unknown PWR	11/7/81	Power Operation	Electrical	Wiring harness was pinched off inside a cabinet and electrically shorted out.
Unknown BWR	2/12/82	Cold Shutdown	Oil	Pipe vibrating loose leaked onto a hot turbine casing.

Appendix C
LaSalle Fire Event Data Table

Control Room Fires

Plant Name	Date of Occurrence	Plant Status	Fire Type	Remarks
Unknown	7/4/78	Power Operation	Diode	Zener diode failed in an RPS circuit.
Three Mile Island 2	7/12/79	Cold Shutdown	Circuit Board	Overheated resistor caused fire in a radiation-monitoring readout panel. Extinguished immediately.
Hatch 1*	3/12/83	Power Operation (94%)	Relay	Low reactor water level RPS relay burned causing a 1/2 scram (failed safe). Extinguished by operators.
Hatch 1*	3/30/83	Power Operation (34%)	Relay	Scram discharge volume high-level RPS relay burned a 1/2 scram (failed causing safe). Extinguished by operators. Same type of relay as in previous event.

*Counted as one event for quantification of fire frequency.

Appendix C
LaSalle Fire Event Data Table

Cable Spreading Room Fires

Plant Name	Date of Occurrence	Plant Status	Fire Type	Remarks
Browns Ferry 1 and 2	3/22/75	Power Operation (100%)	Cable Fire	Spread from cable spreading room to reactor building in Unit 1 and affected Unit 2.
Peach Bottom 3	4/18/77	Power Operation (25%)	Relay Fire	Fire in PCIS logic and RHR valve relay.

Appendix C
LaSalle Fire Event Data Table

Switchgear Room Fires

Plant Name	Date of Occurrence	Plant Status	Fire Type	Remarks
Unknown PWR	11/7/79	Power Operation	480-V Bus	Fire involved 480-V bus; short circuit caused by rodent bridging two energized phases.
Unknown BWR	4/15/80	Power Operation	Bus	Fire involved supply bus in switchgear room.
Unknown PWR	7/6/80	Power Operation	Circuit Breaker	Fire involving switchgear room breaker. Out of adjustment control circuit completed.
Yankee Rowe	8/2/84	Power Operation (100%)	Circuit Breaker	A fault occurred in the 480-V supply ACB to bus 4-1; high resistance in the main disconnecting contacts caused an arc to propagate from the center phase to the outside phases.

Appendix C

Battery Room Fires

Plant Name	Date of Occurrence	Plant Status	Fire Type	Remarks
Robinson 2	7/16/78	Power	Battery	Plastic tops of two operation cells of a station battery caught fire; caused by resistance heating of a terminal connection during the heavy dc load of the emergency oil pump.
Unknown	7/27/78	Power Operation	Battery	Fire caused by defective terminal or unsecured connections.
Palisades	4/4/79	Power Operation (100%)	Battery	A test lead being used to take battery voltage readings fell and struck a battery connector, causing a spark which ignited hydrogen gas.
Brunswick 1	11/27/82	Power Operation (68%)	Capacitor	Battery charger capacitor caught fire for unknown reason.

Appendix C
LaSalle Fire Event Data Table

Turbine Building Fires

Plant Name	Date of Occurrence	Plant Status	Fire Type	Remarks
Nine Mile Point	9/13/72	Power Operation	Oil, Insulation	Leak in oil supply line soaked insulation and ignited when it came in contact with hot pipe.
Yankee Rowe	6/15/73	Power Operation	Oil, Insulation	A fire started in oil-soaked insulation around the high-pressure turbine bearing casing.
Unknown PWR	8/15/73	Power Operation	Unknown	Fire around turbine area-unknown cause.
Unknown PWR	9/20/74	Power Operation	Ping Pong Balls	Cigarette ignited box of ping pong balls--automatic deluge system initiated.
Kewaunee	4/15/75	Power Operation	Bus	Bus fault resulted in cable insulation damage.
Unknown PWR	6/27/75	Power Operation	Oil	Leaking oil from a turbine oil purifier ignited when it contacted purifier heaters. Cables above the fire charred.
Haddam Neck	9/75	Power	Oil, Operation	Oil-soaked insulation. Insulation fire on gland steam lines under high-pressure turbine.

Appendix C
LaSalle Fire Event Data Table

Turbine Building Fires (Continued)

Plant Name	Date of Occurrence	Plant Status	Fire Type	Remarks
Unknown PWR	4/3/77	Power Operation	Hydrogen	Leaking hydrogen at the generator ignited. Purged with CO_2 by shift personnel.
Saint Lucie 1	4/3/77	Power Operation	Hydrogen	Hydrogen leaked from turbine and ignited. Generator inerted with CO_2.
Oyster Creek 1	5/77	Refueling	Cable Insulation	Aluminum-to-copper bus terminal connecters resulted in high resistance and burned cable insulation.
Peach Bottom 3	9/77	Power Operation	Relays	Three relays in feedwater pump relay cabinet ignited. Since flame retardant cables were used in cabinet, fire did not propagate.
Unknown PWR	7/5/78	Power Operation	Auxiliary Boiler	Class B fire including the auxiliary boiler.
Cook 2	11/13/78	Power Operation	Hydrogen	Hydrogen fire under generator. Purged with CO_2.
Browns Ferry 1	1/21/80	Power Operation	Cable Insulation	Fire in cable tray beneath the turbine building operating floor.

Appendix C
LaSalle Fire Event Data Table

Turbine Building Fires (Concluded)

Plant Name	Date of Occurrence	Plant Status	Fire Type	Remarks
Cook 2	12/15/80	Power Operation	Electrical	Fire in generator pilot exciter.
Unknown BWR	7/24/81	Power Operation	Pump	Condensate booster pump binding overheated and caught fire.
Sequoyah 1	1/19/82	Cold Shutdown	Transformer	Neutral ground transformer exploded activating deluge system.
Unknown PWR	2/4/82	Power Operation	Hydrogen	Hydrogen leaked from a bad seal into the generator.
Rancho Seco	3/19/84	Power Operation	Hydrogen	Hydrogen explosion occurred following loss of H_2 side seal oil pump.
Indian Point 2	10/22/84	Power Operation	Insulation	Fire in insulation at the governor end of the high-pressure turbine.
Arnold	11/4/84	Power Operation	Transformer	Transformer fire in yard propagated to the turbine building.

Appendix C
LaSalle Fire Event Data Table

Diesel Generator Room Fires

Plant Name	Date of Occurrence	Plant Status	Fire Type	Remarks
Duane Arnold	3/17/76	Refueling Outage	Oil	The diesel flange gasket leaked exhaust gases with traces of oil onto the exterior of the flange. The oil was ignited by exhaust heat.
Duane Arnold	4/17/76	Power Operation	Oil	Oil leaked onto the diesel exhaust manifold and caught fire.
Millstone 2	9/15/76	Power Operation	Oil, Insulation	A small fire occurred on the exhaust manifold at the control end of the engine.
Zion 2	9/15/76	Power Operation		An operator disconnected a dc tie breaker, tripping the reactor and initiating safe injection. The ma___ generator was overloaded resulting in a fire.
Fitzpatrick	10/15/76	Power Operation	Oil	During testing a fire was discovered in the exhaust the emergency diesel generator.
Duane Arnold	11/4/76	Power Operation	Oil	A hairline fracture in a fuel line fitting caused fuel to spray out and be ignited by heat from the exhaust header.

Appendix C
LaSalle Fire Event Data Table

Diesel Generator Room Fires (Continued)

Plant Name	Date of Occurrence	Plant Status	Fire Type	Remarks
Unknown PWR	12/4/76	Power Operation	Oil	During maintenance on the emergency diesel, a filter was ignited due to overheated oil.
Calvert Cliffs 1	7/11/77	Power Operation	Oil	A small fire developed when lube oil sprayed from the lube oil strainer and ignited on contact with the exhaust manifold.
Kewaunee	9/20/77	Power Operation	Carbon Buildup	A fire was caused by carbon residue buildup in the exhaust path through the turbocharger.
Unknown	12/28/77	Power Operation		Probable cause of fire was combustible materials left in close proximity to the diesel exhaust stack.
Arkansas Nuclear One 1	3/20/78	Refueling Outage	Oil	Failure of bearing oil seal allowed lubricating oil in the turbocharger of the diesel generator.
Arkansas Nuclear One 1	11/15/78	Refueling Outage	Oil	Fire in a diesel exhaust manifold during a test.

Appendix C
LaSalle Fire Event Data Table

Diesel Generator Room Fires (Continued)

Plant Name	Date of Occurrence	Plant Status	Fire Type	Remarks
Crystal River 3	7/24/79	Hot Shutdown	Oil, Carbon	A fire was caused in the exhaust manifold of an emergency diesel generator an excessive fuel-rich mixture aided by oil and carbon accumulation.
Unknown PWR	7/24/79	Power Operation	Electrical	A fire involved the excite control cabinet of a diesel generator.
Crystal River 3	10/15/79	Hot Shutdown	Oil	Fire in the exhaust manifold fuel-oil mix rich on start-(test).
Maine Yankee	10/15/79	Power Operation	Oil	A diesel turbocharger failed which resulted in a fire within the exhaust system.
Calvert Cliffs 2	3/7/80	Power Operation		A small fire occurred in a diesel generator room.
Davis-Besse 1	7/15/80	Power Operation		Fire in a turbocharger.
Davis-Besse 1	9/23/80	Cold Shutdown	Oil	A diesel turbocharger failure which resulted in a fire in the exhaust pipe.

Appendix C
LaSalle Fire Event Data Table

Diesel Generator Room Fires (Continued)

Plant Name	Date of Occurrence	Plant Status	Fire Type	Remarks
Unknown PWR	3/9/81	Power Operation	Oil, Insulation	Fire involved exhaust manifold insulation.
North Anna 1	4/15/81	Power Operation	Oil	An oil leak in the area of the exhaust manifold started a small fire.
Unknown BWR	5/15/81	Power Operation	Electrical	Smoke filled diesel generator building.
Arkansas Nuclear One 2	6/30/81	Hot Shutdown	Oil, Insulation	Oil leaked through a diesel gasket onto insulation, igniting a fire.
San Onofre 1	7/14/81	Power Operation	Oil	Lube oil spraying from a cracked instrument line was ignited by hot exhaust pipe above the diesel engine.
North Anna 1	7/16/81	Power Operation	Oil	An oil leak in the diesel exhaust manifold caused the fire.
Arkansas Nuclear One 1	7/27/81	Power Operation	Oil, Insulation	Fire on oil-soaked insulation on a diesel engine.

Appendix C
LaSalle Fire Event Data Table

Diesel Generator Room Fires (Concluded)

Plant Name	Date of Occurrence	Plant Status	Fire Type	Remarks
Zion 1	8/15/81	Power Operation	Oil	Lube oil sprayed passed a operation o-ring seal onto hot exhaust manifold caused fire.
Praire Island 1	8/15/82	Power Operation	Oil	Turbocharger oil gasket filter failure sprayed lube oil onto hot exhaust manifold and ignited.
Peach Bottom 2	9/7/83	Maintenance Outage	Oil	A diesel governor increased fuel flow as a result of a turbo-charger failure. Excess fuel ignited in the exhaust.
Peach Bottom 1	12/18/84	Cold Shutdown	Oil	A diesel fire was caused by a leaking fitting on a fuel injector line.

APPENDIX D

DETAILED DESCRIPTION OF LOCATION ANALYSIS

D.1 DESCRIPTION OF STEPS IN RMIEP EXTERNAL EVENT LOCATION ANALYSIS FOR FIRE

D.1.1 Introduction

Section D.1.2 of this Appendix describes the procedures for determining front-line system cut sets in terms of the LaSalle fire areas and random failures, and for combining these systems to form sequence cut sets also in terms of the LaSalle fire areas and random failures. Section D.1.3 describes the procedures for determining system cut sets for events within an individual fire area with or without associated random failures. The procedures described here are similar to those used for the LaSalle flood analysis, but not identical because of differences in the nature of the events being analyzed (see Volume 10 of this report for a description of the flood methodology).

Each step in the external event analysis requires one or more SETS user programs. To assist in following the steps, an example SETS user program is provided with the description of the step. Assuming an internal events analysis has been performed before starting the external events analysis, the analyst will have available SETS block files containing fault tree stems for each front-line system and independent subtrees, and value assignments for each primary event and independent subtree. Each step is presented in the form of a description, the input required, comments about the resultant output products, and an example SETS user program. Because of the massive size of the LaSalle analysis (3451 primary events and 363 ISTs), actual computer output has been omitted and only portions of the SETS user code are listed in many steps.

D.1.2 Obtaining System and Sequence Cut Sets in Terms of Fire Areas

Step 1: Read the transformation block mapping each primary event to the primary event name with an "X" appended to its name and the locations associated with the event. (To ensure event names did not exceed 16 characters, the last "-" was removed from the event name before appending the "X" in the following examples.) Solve for the equations of the independent subtrees in terms of this transformation.

Input: Transformation block data and block file from internal events analysis containing fault tree stems for front-line systems, independent subtrees, and equations for independent subtrees.

Products: Two blocks on the block file. The first, TRAN-EQNS, contains the location transformations for each primary event, and the second, TRAN-IST-EQNS, contains the equations for the independent subtrees in terms of the location transformation.

Example SETS User Program:

```
PROGRAM $ LANA1.
COMMENT$ PROGRAM TO PROCESS ISTS FOR LOCATION ANALYSIS $
COMMENT$ 8-5-86 $
RDBLK (TRAN-EQNS).
LDBLK (TRAN-EQNS).
GENFTEQN (METHOD2$ MERGED-IND-ST / TRAN-IST-EQNS).
BLKSTAT.
@                                                (Record Mark)
BLOCK$ TRAN-EQNS.
COMMENT$ 8-5-86 $
COMMENT$ TRANSFORMATION OF PRIMARY EVENTS TO NEW PRIMARY $
COMMENT$ EVENT NAME PLUS ASSOCIATED LOCATIONS $
COMMENT$ (BEGINNING LOCATION ANALYSIS) $
12N016A-000-LFO = 12N016A-000LFOX + LOC-3I5.
12N016B-000-LFO = 12N016B-000LFOX + LOC-3I3.
12N016C-000-LFO = 12N016C-000LFOX + LOC-3I3.
21N001-000-LFO  = 21N001-000LFOX + LOC-3I4.
21N009-000-LFO  = 21N009-000LFOX + LOC-3I4.
                .
                .
                .
PSW175-VOC-LF   = PSW175-VOCLFX + LOC-3G-1.
PSW175-VOC-CC   = PSW175-VOCCCX + LOC-3G-1 + LOC-4C1 + LOC-3F-1.
NORXLEVEL-LOW   = NORXLEVELLOWX.
1EB36Y3X-BCO-CC = 1EB36Y3X-BCOCCX.
```

Step 2: Read a block with equations for mapping each primary event to its primary event name with an "X" appended. Remove last occurrence of a hyphen in each name to ensure the 16-character maximum allowance is not violated. Form new equations for the original ISTs with "X" appended to each component name. Save the new equations on the block file.

Input: Block containing equations for event name changes and block file from previous step.

Products: Two blocks on the block file. The first NAME-X contains the name change for each primary event, and the second NMX-IST-EQNS contains the equations for the original independent subtrees in terms of the changed event names.

Example SETS User Program:

```
PROGRAM $ LANA2.
COMMENT$ PROGRAM TO PROCESS ISTS FOR LOCATION ANALYSIS $
COMMENT$ 8-5-86 $
RDBLK (NAME-X).
LDBLK (NAME-X, IND-ST-EQNS).
COMMENT$ RENAME IND. SUBTREES FOR REMOVAL IN DELETE BLOCK $
```

```
NMX-IST-A   = NOS-PIP-LF5K20A.
NMX-IST-B   = FLOFAULT-SPC-A5X.
NMX-IST-C   = NFFAULT-RHR-A3.
            .
            .
            .
NMX-IST-280 = IST-280.
NMX-IST-281 = IST-281.
NMX-IST-282 = IST-282.
NMX-IST-283 = IST-283.
COMMENT$ SUBIN NAMES FOR IND. SUBTREES FOR USE IN DELETE BLOCK $
SUBINEQN (NMX-IST-A, NMX-IST-A).
SUBINEQN (NMX-IST-B, NMX-IST-B).
SUBINEQN (NMX-IST-C, NMX-IST-C).
            .
            .
            .
SUBINEQN (NMX-IST-280, NMX-IST-280).
SUBINEQN (NMX-IST-281, NMX-IST-281).
SUBINEQN (NMX-IST-282, NMX-IST-282).
SUBINEQN (NMX-IST-283, NMX-IST-283).
FRMBLK (NMX-IST-EQNS * ONLY$
        NMX-IST-A, NMX-IST-B, NMX-IST-C,
            .
            .
            .
        NMX-IST-280, NMX-IST-281, NMX-IST-282, NMX-IST-283).
@                                                   (Record Mark)
BLOCK$ NAME-X.
COMMENT$ TRANSFORM NAMES OF PRIMARY EVENTS $
COMMENT$ 8-5-86 $
12N016A-000-LFO = 12N016A-000LFOX.
12N016B-000-LFO = 12N016B-000LFOX.
12N016C-000-LFO = 12N016C-000LFOX.
21N001-000-LFO  = 21N001-000LFOX.
21N009-000-LFO  = 21N009-000LFOX.
                .
                .
                .
PSW175-VOC-LF = PSW175-VOCLFX.
PSW175-VOC-CC = PSW175-VOCCCX.
NORXLEVEL-LOW = NORXLEVELLOWX.
1EB36Y3X-BCO-CC = 1EB36Y3X-BCOCCX.
```

Step 3: Remove events in original ISTs from equations of ISTs transformed into location space. Call these the remnant equations. Form a block containing the remnant equations and save the new equations on the block file. Print the remnant equations for checking purposes.

Input: Block file from previous step.

Products: Disjunctive normal form print-out of remnant equations and addition of REM-IST-EQNS to the block file.

Example SETS User Program:

```
PROGRAM $ LANA3.
COMMENT$ PROGRAM TO PROCESS ISTS FOR LOCATION ANALYSIS $
COMMENT$ 8-5-86 $
LDBLK (TRAN-IST-EQNS, NMX-IST-EQNS).
COMMENT$ DELETE IND. SUBTREES FROM TRANSFORMED ISTS $
DLTRM (NOS-PIP-LF5K20A  , NMX-IST-A, REM-IST-A).
DLTRM (FLOFAULT-SPC-A5X , NMX-IST-B, REM-IST-B).
DLTRM (NFFAULT-RHR-A3   , NMX-IST-C, REM-IST-C).
                        .
                        .
                        .
DLTRM (IST-280          , NMX-IST-280, REM-IST-280).
DLTRM (IST-281          , NMX-IST-281, REM-IST-281).
DLTRM (IST-282          , NMX-IST-282, REM-IST-282).
DLTRM (IST-283          , NMX-IST-283, REM-IST-283).
FRMBLK (REM-IST-EQNS * ONLY$
        REM-IST-A, REM-IST-B, REM-IST-C,
                        .
                        .
                        .
        REM-IST-280, REM-IST-281, REM-IST-282, REM-IST-283).
PRTEQNDNF (REM-IST-A, REM-IST-B, REM-IST-C,
                        .
                        .
                        .
           REM-IST-280, REM-IST-281, REM-IST-282, REM-IST-283).
```

Step 4: Form new IST equations composed of original ISTs with "X" appended and remnant equations. Reduce the new IST equations. Form a block containing the new IST equations and save the equations on the block file. Print the new equations for checking purposes.

Input: Block file from previous step.

Products: Disjunctive normal form print-out of new IST equations and addition of NEWTRAN-IST-EQNS to the block file.

Example SETS User Program:

```
PROGRAM $ LANA4.
COMMENT$ PROGRAM TO PROCESS ISTS FOR LOCATION ANALYSIS $
COMMENT$ 8-6-86 $
BLKSTAT.
LDBLK (REM-IST-EQNS).
COMMENT$ RENAME IND. SUBTREES FOR NEWTRAN-IST-EQNS BLOCK $
```

```
COMMENT$ SUBSTITUTION FOR EXISTING ISTS $
NOS-PIP-LF5K20A  = IST-AX   + REM-IST-A.
FLOFAULT-SPC-A5X = IST-BX   + REM-IST-B.
NFFAULT-RHR-A3   = IST-CX   + REM-IST-C.
                            .
                            .
                            .
IST-280          = IST-280X + REM-IST-280.
IST-281          = IST-281X + REM-IST-281.
IST-282          = IST-282X + REM-IST-282.
IST-283          = IST-283X + REM-IST-283.
COMMENT$ SUB1N NAMES FOR NEW IND. SUBTREES BLOCK $
SUBINEQN (NOS-PIP-LF5K20A    , NOS-PIP-LF5K20A).
REDUCEQN (NOS-PIP-LF5K20A    , NOS-PIP-LF5K20A).
SUBINEQN (FLOFAULT-SPC-A5X   , FLOFAULT-SPC-A5X).
REDUCEQN (FLOFAULT-SPC-A5X   , FLOFAULT-SPC-A5X).
SUBINEQN (NFFAULT-RHR-A3     , NFFAULT-RHR-A3).
REDUCEQN (NFFAULT-RHR-A3     , NFFAULT-RHR-A3).
                            .
                            .
                            .
SUBINEQN (IST-280 , IST-280).
REDUCEQN (IST-280 , IST-280).
SUBINEQN (IST-281 , IST-281).
REDUCEQN (IST-281 , IST-281).
SUBINEQN (IST-282 , IST-282).
REDUCEQN (IST-282 , IST-282).
SUBINEQN (IST-283 , IST-283).
REDUCEQN (IST-283 , IST-283).
FRMBLK (NEWTRAN-IST-EQNS * ONLY$
        NOS-PIP-LF5K20A, FLOFAULT-SPC-A5X, NFFAULT-RHR-A3,
                            .
                            .
                            .
        IST-280, IST-281, IST-282, IST-283).
COMMENT$ PRINT NEWTRAN IST EQNS$
PRTEQNDNF (NOS-PIP-LF5K20A, FLOFAULT-SPC-A5X, NFFAULT-RHR-A3,
                            .
                            .
                            .
           IST-280, IST-281, IST-282, IST-283).
```

Step 5: Read probability values for primary events with appended "X", IST-X values, and all locations in the location analysis. All locations will be assigned a value of 1.0. Form a value block containing these values for use in evaluating truncation levels for system cut sets.

Input: Data for value block file.

Products: Value block file containing primary events values, IST-X values, and location values.

Example SETS User Program:

```
PROGRAM $ LANA5.
COMMENT$ PROGRAM TO READ VALUE BLOCK FOR LOCATION ANALYSIS $
COMMENT$ 8-12-86 $
COMMENT$ READ VALUE BLOCK CONTAINING -------- $
COMMENT$ PRIMARY EVENT VALUES FOR LOCATION ANALYSIS, $
COMMENT$ IST VALUES FOR LOCATION ANALYSIS AND $
COMMENT$ LOCATION VALUES FOR LOCATION ANALYSIS $
RDVALBLK (LSLVAL).
@                                                    (Record Mark)
VALUE BLOCK$LSLVAL.
COMMENT$ 8-8-86 VALUE BLOCK RE-ENTERED FOR LOCATION ANALYSIS $
COMMENT$ VALUES FOR PRIMARY EVENTS WITH APPENDED X ON NAME $
  2.8E-07 $ 12N016A-000FSLX $
  1.2E-03 $ 12N016A-000LFOX $
  2.8E-07 $ 12N016B-000FSLX $
  1.2E-03 $ 12N016B-000LFOX $
  2.8E-07 $ 12N016C-000FSLX $
  1.2E-03 $ 12N016C-000LFOX $
            .
            .
            .
  2.8E-07 $ 21N001-000FSLX  $
  1.2E-03 $ 21N001-000LFOX  $
  2.8E-07 $ 21N009-000FSLX  $
  1.2E-03 $ 21N009-000LFOX  $
            .
            .
            .
  2.4E-06 $ PSW175-VOCLFX   $
  1.4E-05 $ PSW175-VOCCCX   $
  1.0     $ NORXLEVELLOWX   $
  0.0     $ 1EB36Y3X-BCOCC  $
 COMMENT$ VALUES FOR ORIGINAL ISTS WITH APPENDED X $
 1.0056E-8  $ IST-AX $
 2.4200E-5  $ IST-BX $
 1.2700E-4  $ IST-CX $
            .
            .
            .
 8.9900E-4  $ IST-280X $
 2.0022E-1  $ IST-281X $
 2.0074E-1  $ IST-282X $
 2.0234E-1  $ IST-283X $
COMMENT$ LOCATION VALUES FOR LOCATION ANALYSIS $
 1.0 $ LOC-3I1 $
 1.0 $ LOC-3I2 $
 1.0 $ LOC-3I3 $
```

```
1.0 $ LOC-3I4 $
1.0 $ LOC-3I5 $
          .
          .
          .
1.0 $ LOC-3F-1 $
1.0 $ LOC-3G-1 $
1.0 $ LOC-4C1  $
          .
          .
          .
```

Step 6: Read block containing equations to set initiating events to /OMEGA.

Input: Data block containing initiator equations and block file from previous step.

Products: Addition of block called LANA-PHI to the block file.

Example SETS User Program:

```
PROGRAM $ LANA6.
COMMENT$ PROGRAM TO SET INITIATORS TO PHI FOR LOCATION ANALYSIS $
COMMENT$ 8-12-86 $
RDBLK (LANA-PHI).
BLKSTAT.
@                                                    (Record Mark)
BLOCK$ LANA-PHI.
COMMENT$ SET INITIATORS TO PHI FOR ALL LOCATION ANALYSIS $
COMMENT$ CALCULATIONS, NOTE PRIMARY EVENT NAMES ARE IN APPENDED $
COMMENT$ "X" FORM $
T1IEX = /OMEGA.
T2IEX = /OMEGA.
          .
          .
          .
LOSPIEX = /OMEGA.
LLOCAIEX = /OMEGA.
MLOCAIEX = /OMEGA.
SLOCAIEX = /OMEGA.
```

Step 7: Load front-line system fault tree, transformation equations, and initiator equation changes. Solve front-line system to obtain minimal cut sets in terms of locations and random failures. Cut sets will still contain independent subtrees. This step should be repeated for each front-line system involved in a sequence.

Input: Block file from previous step.

Products: Block containing minimal cut sets for front-line system.

Example SETS User Program:

```
PROGRAM$ LANA7.
COMMENT$ 8-18-86 $
COMMENT$ RUN CODE FOR SYST CUT SETS FOR LASALLE LOCATION $
COMMENT$ ANALYSIS $
BLKSTAT.
LDBLK (CSS-NEW-FT).
LDBLK (TRAN-EQNS, NEWTRAN-IST-EQNS, LANA-PHI).
COMMENT$ FOLLOWING CODE USED TO SOLVE CSS IN INTERNAL EVENTS $
COMMENT$ ANALYSIS $
COMMENT$ SET HIGH-DWPRESSURE TO OMEGA FOR ALL SYSTEMS EXCEPT $
COMMENT$ PCS (I.E. MSS) $
HIGH-DWPRESSURE = OMEGA.
SUBINEQN (SPR-PIP-RHR-2AW, SPR-PIP-RHR-2AW).
TRNTRMVAL (PROBABILITY/ 1.0E-4, LSLVAL*
           SPR-PIP-RHR-2AW, SPR-PIP-RHR-2AW).
SUBINEQN (21N048A-000, 21N048A-000).
TRNTRMVAL (PROBABILITY/ 1.0E-4, LSLVAL* 21N048A-000,
           21N048A-000).
                              .
                              .
                              .
FRMBLK (CSSF-1).
SUBINEQN (1EE-GVU-CTP, 1EE-GVU-CTP).
TRNTRMVAL (PROBABILITY/ 1.0E-4, LSLVAL* 1EE-GVU-CTP,
           1EE-GVU-CTP).
                              .
                              .
                              .
FRMBLK (CSSF-2).
DLTBLK (CSSF-1).
SUBINEQN (NOS-POP-RHR-2AG, NOS-POP-RHR-2AG).
TRNTRMVAL (PROBABILITY/ 1.0E-4, LSLVAL*
           NOS-POP-RHR-2AG, NOS-POP-RHR-2AG).
                              .
                              .
                              .
FRMBLK (CSSF-3).
DLTBLK (CSSF-2).
SUBINEQN (FLOFAULT-RHR-A3, FLOFAULT-RHR-A3).
TRNTRMVAL (PROBABILITY/ 1.0E-4, LSLVAL*
           FLOFAULT-RHR-A3, FLOFAULT-RHR-A3).
                              .
                              .
                              .
COMMENT$ CODE INSERTED HERE FOR INPUTS TO TOP GATE--- $
SUBINEQN (FOP-OUT-CSS-A7A, FOP-OUT-CSS-A7A).
```

```
TRNTRMVAL (PROBABILITY/ 1.0E-4, LSLVAL* FOP-OUT-CSS-A7A,
           FOP-OUT-CSS-A7A).
SUBINEQN (FOP-OUT-CSS-B7A, FOP-OUT-CSS-B7A).
TRNTRMVAL (PROBABILITY/ 1.0E-4, LSLVAL* FOP-OUT-CSS-B7A,
           FOP-OUT-CSS-B7A).
SUBINEQN (CSSF-1OF2L-1OF2H, CSSF-1OF2L-1OF2H).
TRNTRMVAL (PROBABILITY/ 1.0E-4, LSLVAL*
           CSSF-1OF2L-1OF2H, CSS-LOC-MCS-T3).
FRMBLK (CSS-LOC-MCS-T3* ONLY$ CSS-LOC-MCS-T3).
DLTBLK (CSSF-3).
```

Step 8: Read block containing equations for mapping locations into fire areas. Load each front-line system's location-space cut sets with the location-to-fire area transformation equations and solve for each front-line system's cut sets in terms of fire areas. For each front-line system, form a block containing the system cut sets for fire areas.

Input: Equation data to map locations to fire areas and block file from previous step.

Products: Addition of equation blocks RCI-FIRE-LOC-T3, ..., ADS-FIRE-LOC-T3 to the block file.

Example SETS User Program:

```
PROGRAM $ LANA8.
COMMENT$ 9-22-86 $
COMMENT$ TRANSFORM LOCATION SYSTEM CUT SETS FOR LASALLE $
COMMENT$ ANALYSIS $
COMMENT$ TO FIRE LOCATION EQUATIONS $
COMMENT$ READ BLOCK FOR FIRE TRANSFORMATION EQUATIONS $
RDBLK (FIRELOC-EQN).
COMMENT$ LOAD TRANSFORMATIONS AND SYSTEMS$
LDBLK (FIRELOC-EQN, RCI-LOC-MCS-T3).
SUBINEQN (RCI-LOC-MCS-T3, RCI-FIRE-LOC-T3).
REDUCEQN (RCI-FIRE-LOC-T3, RCI-FIRE-LOC-T3).
FRMBLK (RCI-FIRE-LOC-T3 * ONLY$ RCI-FIRE-LOC-T3).
                              .
                              .
                              .
LDBLK (ADS-LOC-MCS-T3).
SUBINEQN (ADS-LOC-MCS-T3, ADS-FIRE-LOC-T3).
REDUCEQN (ADS-FIRE-LOC-T3, ADS-FIRE-LOC-T3).
FRMBLK (ADS-FIRE-LOC-T3* ONLY$ ADS-FIRE-LOC-T3).
BLKSTAT.
@                                                (Record Mark)
BLOCK$ FIRELOC-EQN.
LOC-1=FRZ-C+FRZ-D.
LOC-2A=FRZ-C.
```

```
LOC-2B1=FRZ-C.
        .
        .
        .
LOC-3G-2=FRZ-D.
LOC-3G-3=FRZ-D.
LOC-3G-4=FRZ-D.
LOC-3H1=FRZ-D.
LOC-3H2=FRZ-D.
LOC-3H3=FRZ-D.
        .
        .
        .
LOC-5B6=FRZ-E.
LOC-5B7=FRZ-E.
LOC-5B8=FRZ-E.
LOC-5B9=FRZ-E.
LOC-5C1=FRZ-E.
LOC-5C10=FRZ-E.
LOC-5C11=FRZ-E.
        .
        .
        .
LOC-8C5=FRZ-DD.
LOC-9A=FRZ-VV.
LOC-LSH=FRZ-LSH.
LOC-RSH=FRZ-RSH.
LOC-OG=/OMEGA.
LOC-OUTSIDE=/OMEGA.
```

Step 9: Read values for fire areas so probability calculations can be performed with cut sets. Print minimal cut sets for fire areas for each front-line system for analyst review.

Input: Value block for fire areas and block file from from previous step.

Products: Computer output listing containing front-line system cut sets for fire and their associated probability value. Value block modified to include values for fire areas.

Example SETS User Program:

```
PROGRAM $ LANA9.
COMMENT$ 9-22-86 $
COMMENT$ READ FIRE AREA VALUES $
COMMENT$ PRINT FIRE CUT SETS FOR FRONT-LINE SYSTEMS $
RDVALBLK (LSLVAL).
LDBLK (RCI-FIRE-LOC-T3).
COMTRMVAL (PROBABILITY/ 1.0E-4, LSLVAL * RCI-FIRE-LOC-T3).
DLTEQN.
```

```
LDBLK (MFW-FIRE-LOC-T3).
COMTRMVAL (PROBABILITY/ 1.0E-4, LSLVAL * MFW-FIRE-LOC-T3).
DLTEQN.
LDBLK (ADS-FIRE-LOC-T3).
COMTRMVAL (PROBABILITY/ 1.0E-4, LSLVAL * ADS-FIRE-LOC-T3).
DLTEQN.
                                .
                                .
                                .
LDBLK (HCS-FIRE-LOC-T3).
COMTRMVAL (PROBABILITY/ 1.0E-4, LSLVAL * HCS-FIRE-LOC-T3).
@                                                    (Record Mark)
VALUE BLOCK$ LSLVAL.
COMMENT$ 9-12-86 VALUES FOR FIRE AREAS $
 1.0 $
          FRZ-A,
          FRZ-AA,
          FRZ-AC,
            .
            .
            .
          FRZ-J,
          FRZ-JJ,
          FRZ-K,
          FRZ-KK,
          FRZ-L,
          FRZ-LL,
          FRZ-LSH,
            .
            .
            .
          FRZ-V,
          FRZ-VV,
          FRZ-W,
          FRZ-X,
          FRZ-Y,
          FRZ-Z $
```

Step 10: Combine system failure states of RCI, MFW and HCS to form sequence segment for use in computing fire Sequence 1 and Sequence 2. (Note: Block containing RCI and MFW is saved during execution to ensure entire computer run is not lost in the event the program times-out and/or is unable to complete all of the SETS user program.) Save sequence segment on the block file.

Input: Block file and value block file from previous step.

Products: Addition of sequence segment FIRE-RCIMFWHCS to the block file.

Example SETS User Program:

```
PROGRAM $ LANA10.
COMMENT$ 9-22-86 $
COMMENT$ OBTAIN FIRE SEQUENCE SEGMENT FOR LASALLE FIRE ANALYSIS $
COMMENT$ COMBINE FAILURE SYSTEMS -- RCI, MFW AND HCS $
LDBLK (RCI-FIRE-LOC-T3, MFW-FIRE-LOC-T3).
S1 = RCI-FIRE-LOC-T3 * MFW-FIRE-LOC-T3.
SUBINEQN (S1, S1).
TRNTRMVAL (PROBABILITY/ 1.0E-4, LSLVAL* S1, FIRE-RCIMFW).
FRMBLK (FIRE-RCIMFW* ONLY$ FIRE-RCIMFW).
LDBLK (HCS-FIRE-LOC-T3).
S2 = FIRE-RCIMFW * HCS-FIRE-LOC-T3.
SUBINEQN (S2, S2).
TRNTRMVAL (PROBABILITY/ 1.0E-4, LSLVAL* S2, FIRE-RCIMFWHCS).
FRMBLK (FIRE-RCIMFWHCS* ONLY$ FIRE-RCIMFWHCS).
DLTBLK (FIRE-RCIMFW).
BLKSTAT.
```

Step 11: Compute Fire Sequence 1 and save the equation on the block file.

Input: Block file from previous step.

Products: Addition of file FIRE-SEQ1 containing fire cut sets for Sequence 1 to block file.

Example SETS User Program:

```
PROGRAM $ LANA11.
COMMENT$ 9-23-86 $
COMMENT$ OBTAIN FIRE SEQUENCES FOR LASALLE ANALYSIS $
COMMENT$ COMBINE FAILURE SYSTEMS FOR SEQUENCE 1 = $
COMMENT$ ADS*HCS*RCI*MFW $
LDBLK (FIRE-RCIMFWHCS, ADS-FIRE-LOC-T3).
S1 = FIRE-RCIMFWHCS * ADS-FIRE-LOC-T3.
SUBINEQN (S1, S1).
TRNTRMVAL (PROBABILITY/ 1.0E-4, LSLVAL* S1, FIRE-SEQ1).
FRMBLK (FIRE-SEQ1* ONLY$ FIRE-SEQ1).
BLKSTAT.
```

Step 12: Compute Fire Sequence 2 and save the equation on the block file.

Input: Block file from previous step.

Products: Addition of file FIRE-SEQ2 containing fire cut sets for Sequence 2 to block file.

Example SETS User Program:

```
PROGRAM $ LANA12.
COMMENT$ 9-23-86 $
COMMENT$ OBTAIN FIRE SEQUENCES FOR LASALLE $
COMMENT$ COMBINE FAILURE SYSTEMS FOR SEQUENCE 2 = $
COMMENT$ MFW*RCI*HCS*CDS*LCS*LCI $
LDBLK (FIRE-RCIMFWHCS, CDS-FIRE-LOC-T3).
S1 = FIRE-RCIMFWHCS * CDS-FIRE-LOC-T3.
SUBINEQN (S1, S1).
TRNTRMVAL (PROBABILITY/ 1.0E-4, LSLVAL* S1, FIRE-2CDS).
FRMBLK (FIRE-2CDS* ONLY$ FIRE-2CDS).
LDBLK (LCS-FIRE-LOC-T3).
S2 = FIRE-2CDS * LCS-FIRE-LOC-T3.
SUBINEQN (S2, S2).
TRNTRMVAL (PROBABILITY/ 1.0E-4, LSLVAL* S2, FIRE-2CDSLCS).
FRMBLK (FIRE-2CDSLCS* ONLY$ FIRE-2CDSLCS).
DLTBLK (FIRE-2CDS).
LDBLK (LCI-FIRE-LOC-T3).
S3 = FIRE-2CDSLCS * LCI-FIRE-LOC-T3.
SUBINEQN (S3, S3).
TRNTRMVAL (PROBABILITY/ 1.0E-4, LSLVAL* S3, FIRE-SEQ2).
FRMBLK (FIRE-SEQ2* ONLY$ FIRE-SEQ2).
DLTBLK (FIRE-2CDSLCS).
BLKSTAT.
```

Step 13: Compute Fire Sequence 3A and 3B and save the equation on the block file.

Input: Block file from previous step.

Products: Addition of files FIRE-SEQ3A and FIRE-SEQ3B containing fire cut sets for Sequence 3A and 3B to block file.

Example SETS User Program:

```
PROGRAM $ LANA13.
COMMENT$ 9-18-86 $
COMMENT$ OBTAIN FIRE SEQUENCES FOR LASALLE LOCATION ANALYSIS $
COMMENT$ FIRE LOCATION SEQUENCE 3A = SCS*SPC*CSS*VNT $
COMMENT$ COMBINE FAILURE SYSTEMS $
LDBLK (SPC-FIRE-LOC-T3, CSS-FIRE-LOC-T3).
S1 = SPC-FIRE-LOC-T3 * CSS-FIRE-LOC-T3.
SUBINEQN (S1, S1).
TRNTRMVAL (PROBABILITY/ 1.0E-4, LSLVAL* S1, FIRE-SPCCSS).
FRMBLK (FIRE-SPCCSS* ONLY$ FIRE-SPCCSS).
LDBLK (SCS-FIRE-LOC-T3).
S2 = FIRE-SPCCSS * SCS-FIRE-LOC-T3.
SUBINEQN (S2, S2).
TRNTRMVAL (PROBABILITY/ 1.0E-4, LSLVAL* S2, FIRE-SPCCSSSCS).
FRMBLK (FIRE-SPCCSSSCS* ONLY$ FIRE-SPCCSSSCS).
```

```
DLTBLK (FIRE-SPCCSS).
LDBLK (VNT-FIRE-LOC-T3).
S3 = FIRE-SPCCSSSCS * VNT-FIRE-LOC-T3.
SUBINEQN (S3, S3).
TRNTRMVAL (PROBABILITY/ 1.0E-4, LSLVAL* S3, FIRE-SEQ3A).
FRMBLK (FIRE-SEQ3A* ONLY$ FIRE-SEQ3A).
DLTBLK (FIRE-SPCCSSSCS).
DLTEQN.
COMMENT$ SEQ3B = SCS*SPC*CSS*VNT*MSS $
COMMENT$ LOAD TRANSFORMATIONS AND SYSTEMS$
LDBLK (FIRE-SEQ3A, MSS-FIRE-LOC-T3).
S1 = FIRE-SEQ3A * MSS-FIRE-LOC-T3.
SUBINEQN (S1, S1).
TRNTRMVAL (PROBABILITY/ 1.0E-4, LSLVAL* S1, FIRE-SEQ3B).
FRMBLK (FIRE-SEQ3B* ONLY$ FIRE-SEQ3B).
BLKSTAT.
```

Step 14: Read block to change independent subtree names from appended "X" form to original IST names. Load equations for making substitution from independent subtrees to primary events. Determine fire sequence cut sets consisting of a fire area and/or primary events truncated at a probability value of 1E-3.

Input: Block file and value block from previous step. Data block mapping independent subtrees for IST-JX TO IST-J form.

Products: Addition of primary event form of fire sequence equations to the block file -- FIRE-SEQ1-PRI, FIRE-SEQ2-PRI, FIRE-SEQ3A-PRI, and FIRE-SEQ3B-PRI.

Example SETS User Program:

```
PROGRAM $ LANA14.
COMMENT$ 9-22-86 $
COMMENT$ SUBSTITUTE FOR IND. SUBTREES FOR FLOOD SEQUENCES $
COMMENT$ READ BLOCK TO TRANSFORM IST-JX TO  IST-J $
RDBLK (ISTX-TO-IST).
LDBLK (IND-ST-EQNS, ISTX-TO-IST, NAME-X, FIRE-SEQ1).
SUBINEQN (FIRE-SEQ1, FIRE-SEQ1-PRI).
TRNTRMVAL (PROBABILITY/ 1.0E-4, LSLVAL* FIRE-SEQ1-PRI, FIRE-SEQ1-   PRI).
FRMBLK (FIRE-SEQ1-PRI* ONLY$ FIRE-SEQ1-PRI).
DLTEQN.
LDBLK (IND-ST-EQNS, ISTX-TO-IST, NAME-X, FIRE-SEQ2).
SUBINEQN (FIRE-SEQ2, FIRE-SEQ2-PRI).
TRNTRMVAL (PROBABILITY/ 1.0E-4, LSLVAL* FIRE-SEQ2-PRI, FIRE-SEQ2-   PRI).
FRMBLK (FIRE-SEQ2-PRI* ONLY$ FIRE-SEQ2-PRI).
DLTEQN.
LDBLK (IND-ST-EQNS, ISTX-TO-IST, NAME-X, FIRE-SEQ3A).
SUBINEQN (FIRE-SEQ3A, FIRE-SEQ3A-PRI).
TRNTRMVAL (PROBABILITY/ 1.0E-4, LSLVAL* FIRE-SEQ3A-PRI, FIRE-SEQ3A-PRI).
```

```
FRMBLK (FIRE-SEQ3A-PRI* ONLY$ FIRE-SEQ3A-PRI).
DLTEQN.
LDBLK (IND-ST-EQNS, ISTX-TO-IST, NAME-X, FIRE-SEQ3B).
SUBINEQN (FIRE-SEQ3B, FIRE-SEQ3B-PRI).
TRNTRMVAL (PROBABILITY/ 1.0E-4, LSLVAL* FIRE-SEQ3B-PRI, FIRE-SEQ3B-PRI).
FRMBLK (FIRE-SEQ3B-PRI* ONLY$ FIRE-SEQ3B-PRI).
BLKSTAT.
@                                                    (Record Mark)
BLOCK$ ISTX-TO-IST.
COMMENT$ CHANGE IND. SUBTREES BACK TO ORIGINAL NAMES $
 IST-AX    =  NOS-PIP-LF5K20A.
 IST-BX    =  FLOFAULT-SPC-A5X.
 IST-CX    =  NFFAULT-RHR-A3.
            .
            .
            .
 IST-WWWX  =  O-ATW-TB15.
 IST-XXXX  =  NOS-PIP-SAV4ACA.
 IST-YYYX  =  NOS-PIP-SAP1AAC2.
 IST-ZZZX  =  NEB232BB-BCO.
 IST-AAAAX=   1EB432C-BCO.
 IST-BBBBX=   1EG0EX-QCO.
 IST-1X    =  IST-1.
 IST-2X    =  IST-2.
            .
            .
            .
 IST-279X  =  IST-279.
 IST-280X  =  IST-280.
 IST-281X  =  IST-281.
 IST-282X  =  IST-282.
 IST-283X  =  IST-283.
```

Step 15: Print cut sets with associated probability for fire sequences.

Input: Block file and value block from previous step.

Products: Computer output listing of cut sets for each fire sequence.

Example SETS User Program:

```
PROGRAM $ LANA15.
COMMENT$ 9-22-86 $
COMMENT$ PRINT CUT SETS FOR FIRE SEQUENCES $
LDBLK (FIRE-SEQ1-PRI).
COMTRMVAL (PROBABILITY/ 1.0E-4, LSLVAL* FIRE-SEQ1-PRI).
DLTEQN.
LDBLK (FIRE-SEQ2-PRI).
COMTRMVAL (PROBABILITY/ 1.0E-4, LSLVAL* FIRE-SEQ2-PRI).
DLTEQN.
```

```
LDBLK (FIRE-SEQ3A-PRI).
COMTRMVAL (PROBABILITY/ 1.0E-4, LSLVAL* FIRE-SEQ3A-PRI).
DLTEQN.
LDBLK (FIRE-SEQ3B-PRI).
COMTRMVAL (PROBABILITY/ 1.0E-4, LSLVAL* FIRE-SEQ3B-PRI).
```

D.1.3 Fire Location Analysis for Individual Fire Area

The following SETS user programs are examples of the steps necessary to determine minimal cut sets for components and cables within an individual fire area and its associated random failures that has been selected by the systems analyst for further review. Sample programs are given for a fire area with and without associated random events.

D.1.3.1 Sample SETS Programs for Fire Area With Associated Randoms

Step 1: Read the transformation block mapping each primary event to its appropriate group as described in Section 3.5.5.1. Solve for the equations of the independent subtrees in terms of this transformation.

Input: Transformation data and block file from internal events analysis containing fault trees for front-line system stems and independent subtrees.

Products: Two blocks on the block file. The first TRAN-FRZ-S3ZAC contains the transformation equations for each primary event in the fire area of interest. The second S3ZAC-IST-EQNS contains the equations for the independent subtrees in terms of the transformation data for the individual fire area.

Example SETS User Program:

```
PROGRAM$ S3ZAC-P1.
COMMENT$ 10-15-87 $
COMMENT$ FOR FIRE AREA AC (I.E. FRZ-AC)$
BLKSTAT.
COMMENT$ ------------------------------------------------------ $
COMMENT$ PROGRAM TO PROCESS ISTS FOR SEQUENCES 3A AND 3B FIRE $
COMMENT$ AREA AC $
RDBLK (TRAN-FRZ-S3ZAC).
LDBLK (TRAN-FRZ-S3ZAC).
COMMENT$ DID NOT TRUNCATE ON PROBABILITY BECAUSE EXCEPTCMP $
COMMENT$ OPTION IS NOT ALLOWED IN GENFTEQN PROCEDURE $
GENFTEQN (METHOD2$ MERGED-IND-ST-F2 / S3ZAC-IST-EQNS).
BLKSTAT.
@                                                    (Record Mark)
BLOCK$ TRAN-FRZ-S3ZAC .
COMMENT$ TRANSFORMATION BLOCK FOR FIRE SEQ 3 (FRZ-AC $
COMMENT$ WITH RANDOMS)$
COMMENT$ RANDOM EVENTS FOR FIRE AREA AC -- SEQUENCES 3A AND 3B $
```

```
COMMENT$    EE-C2DG01F-PLG $
COMMENT$   EE-CSCD300B-PLG $
COMMENT$   SEVY03CB-FMS-LF $
                .
                .
                .
COMMENT$    1EB236B-BCO-LF $
COMMENT$     C2DG01F-S-UUM $
COMMENT$ INCLUDE EVENTS NOT HAVING LOCATIONS BUT NECESSARY $
COMMENT$ FOR PROPER AREA ANALYSIS $
COMMENT$ EXTERNAL EVENTS FOR INCLUSION IN AREA $
EE-MDC-DPS-A-RU = /EE-MDC-DPS-ARUX.
EE-MDC-DPS-B-RU = /EE-MDC-DPS-BRUX.
                .
                .
                .
EE-MDP-PSW-CA-R = /EE-MDP-PSW-CARX.
EE-CST-LVL      = /EE-CSTLVLX.
COMMENT$ FLAG EVENTS FOR INCLUSION IN AREA $
FLOW-CSS-A7A = /FLOW-CSSA7AX.
FLOW-CSS-B7A = /FLOW-CSSB7AX.
                .
                .
                .
RCICRMCOOL-FLAG = /RCICRMCOOLFLAGX.
NOFLOW-B1A      = /NOFLOWB1AX.
COMMENT$ END OF EVENTS HAVING NO FIRE AREA ASSOCIATION $
COMMENT$ EVENTS IN FIRE AREA AC ---- FRZ-AC $
21N038A-000-LFO  = /21N038A-000LFOX.
ADARK2A-R00-LFO  = /ADARK2A-R00LFOX.
ADARK38A-R00-LFO = /ADARK38A-R00LFOX.
                .
                .
                .
2C11C001A-BCO-CC = /2C11C001A-BCOCCX.
2WR01PA-BCO-CC   = /2WR01PA-BCOCCX.
COMMENT$ EVENTS NOT IN FIRE AREA AC ---- FRZ-AC $
12N016A-000-LFO = /OMEGA.
12N016B-000-LFO = /OMEGA.
                .
                .
                .
RPSF35BX-FUS-LFO = /OMEGA.
1EB1611-BCO      = /OMEGA.
1EB36Y3X-BCO-CC  = /OMEGA.
                .
                .
                .
COMMENT$ FOR ALL SYSTEM AND SEQUENCES IN LOCATION ANALYSIS -- $
COMMENT$ INITIATORS ARE SET TO PHI  7-29-86 $
T1-IE = /OMEGA.
T2-IE = /OMEGA.
```

```
T3-IE = /OMEGA.
                    .
                    .
                    .

COMMENT$ END OF TRANSFORMATION DATA FOR FIRE AREA AC $
```

Step 2: Read value block containing probability values for the primary events that act as associated random events for the sequence and fire area of interest. Load transformation equations for primary events and independent subtrees with fault tree stem and begin calculations for solution of MSS system.

Input: Value data for associated random events and block file from previous step.

Products: Formation of value block file LSLVAL. Addition of block MSSF-3 to block file. Block MSSF-3 contains equations for part of the solution of the MSS system.

Example SETS User Program:

```
PROGRAM$ S3ZAC-P6A.
COMMENT$ 10-15-87 $
COMMENT$ PROGRAM TO SOLVE MSS SYSTEM FOR SEQUENCES 3A AND 3B $
COMMENT $ FIRE AREA AC $
COMMENT$ FIRE AREA AC IS FRZ-AC $
BLKSTAT.
COMMENT$ READ VALUE BLOCK FOR ASSOCIATED RANDOMS FOR FIRE $
COMMENT$ AREA AC -- $
COMMENT$ SEQUENCE 3A AND 3B $
RDVALBLK (LSLVAL).
COMMENT$ LOAD TRANSFORMATION EQUATIONS AND IST-EQUATIONS $
LDBLK (MSS-NEW-FT, TRAN-FRZ-S3ZAC, S3ZAC-IST-EQNS).
COMMENT$ RUN CODE FOR MSS SYST CUT SETS FOR LASALLE FIRE $
COMMENT$ ANALYSIS $
COMMENT$ SET HIGH-DWPRESSURE TO OMEGA FOR ALL SYSTEMS EXCEPT $
COMMENT$ PCS (I.E. MSS) FOR PCS HIGH-DWPRESSURE IS PHI $
HIGH-DWPRESSURE = /OMEGA.
COMMENT$ FIRST PART OF CODE FROM GENFTEQN FOR MSS SYSTEM $
COMMENT$ 10-10-85 $
SUBINEQN (DWPRESSURE-HIGH, DWPRESSURE-HIGH).
TRNTRMVAL (PROBABILITY/ 1.0E-4, LSLVAL *
           DWPRESSURE-HIGH, DWPRESSURE-HIGH *EXCEPTCMP$).
SUBINEQN (LOSP, LOSP).
TRNTRMVAL (PROBABILITY/ 1.0E-4, LSLVAL * LOSP, LOSP *EXCEPTCMP$).
                    .
                    .
                    .
SUBINEQN (FOP-OUT-DPS-N13, FOP-OUT-DPS-N13).
```

```
TRNTRMVAL (PROBABILITY/ 1.0E-4, LSLVAL *
          FOP-OUT-DPS-N13, FOP-OUT-DPS-N13 *EXCEPTCMP$).
SUBINEQN (FOP-OUT-DPS-IN1, FOP-OUT-DPS-IN1).
TRNTRMVAL (PROBABILITY/ 1.0E-4, LSLVAL *
          FOP-OUT-DPS-IN1, FOP-OUT-DPS-IN1 *EXCEPTCMP$).
FRMBLK (MSSF-3).
BLKSTAT.
@                                                    (Record Mark)
VALUE BLOCK$ LSLVAL .
COMMENT$ RANDOMS ASSOCIATED WITH SEQUENCE 3A AND 3B AND $
COMMENT$ FIRE AREA AC $
 1.0E-2  $    EE-C2DG01F-PLG  $
 1.0E-2  $    EE-CSCD300B-PLG $
                .
                .
                .
 3.0E-4  $    C2DG01F-S-UUM   $
COMMENT$ END OF DATA FOR ASSOCIATED RANDOMS $
```

Step 3: Load transformation equations for primary events, independent subtrees, and equations for MSS system from previous computer run and continue solution of MSS system.

Input: Value block and block file from previous step.

Products: Addition to block file of block MSS-S3ZAC containing the minimal cut sets for fire area FRZ-AC. Removal from block file of blocks containing partial solutions of MSS system (i.e., MSSF-3, MSSF-4, ... MSSF-9).

Example SETS User Program:

```
PROGRAM$ S3ZAC-P6G.
COMMENT$ 10-15-87 $
COMMENT$ PROGRAM TO SOLVE MSS SYSTEM FOR SEQUENCES 3A AND 3B $
COMMENT$ FIRE AREA AC $
COMMENT$ FIRE AREA AC IS FRZ-AC $
COMMENT$ LOAD TRANSFORMATION EQUATIONS, IST-EQUATIONS AND $
COMMENT$ PARTIAL MSS SOLUTION $
BLKSTAT.
LDBLK (MSSF-3).
COMMENT$ RUN CODE FOR MSS SYST CUT SETS FOR LASALLE FIRE $
COMMENT$ ANALYSIS $
COMMENT$ CONTINUATION OF RUN -- CODE ADDED $
              .
              .
              .
SUBINEQN (MSSF-1OF5V-1OF4P, MSSF-1OF5V-1OF4P * STOP$
          FOP-IN-MSS-B1, FOP-IN-MSS-C8, CWSF-1OF3P-1OF2L).
TRNTRMVAL (PROBABILITY/ 1.0E-4, LSLVAL * MSSF-1OF5V-1OF4P,
```

```
          MSSF-1OF5V-1OF4P * EXCEPTNONCMP$ FOP-IN-MSS-B1,
          FOP-IN-MSS-C8, CWSF-1OF3P-1OF2L/EXCEPTCMP$).
            .
            .
            .
FRMBLK (MSSF-4).
DLTBLK (MSSF-3).
            .
            .
            .
SUBINEQN (MSSF-1OF5V-1OF4P, MSSF-1OF5V-1OF4P * STOP$
          FOP-IN-MSS-B1, FOP-IN-MSS-C8).
TRNTRMVAL (PROBABILITY/ 1.0E-4, LSLVAL * MSSF-1OF5V-1OF4P,
          MSSF-1OF5V-1OF4P *EXCEPTNONCMP$ FOP-IN-MSS-B1,
          FOP-IN-MSS-C8 /EXCEPTCMP$).
SUBINEQN (MSSF-1OF5V-1OF4P, MSSF-1OF5V-1OF4P * STOP$
          FOP-IN-MSS-C8).
TRNTRMVAL (PROBABILITY/ 1.0E-4, LSLVAL * MSSF-1OF5V-1OF4P,
          MSSF-1OF5V-1OF4P *EXCEPTNONCMP$ FOP-IN-MSS-C8
          /EXCEPTCMP$).
SUBINEQN (MSSF-1OF5V-1OF4P, MSSF-1OF5V-1OF4P).
TRNTRMVAL (PROBABILITY/ 1.0E-4, LSLVAL * MSSF-1OF5V-1OF4P,
          MSS-S3ZAC *EXCEPTCMP$).
FRMBLK (MSS-S3ZAC* ONLY$ MSS-S3ZAC).
DLTBLK (MSSF-9).
BLKSTAT.
```

Step 4: Load and print MSS system minimal cut sets and probability values for fire area FRZ-AC.

Input: Value block and block file from previous step.

Products: Computer print-out of MSS system minimal cut sets and corresponding probability values for fire area FRZ-AC associated with Sequences 3A and 3B.

Example SETS User Program:

```
PROGRAM$ S3ZAC-P7.
COMMENT$ 11-18-86 $
COMMENT$ PRINT FIRE AREA AC CUTSETS $
COMMENT$ FRZ-AC WITH ASSOCIATED RANDOMS FOR SEQ3A AND SEQ3B $
LDBLK (MSS-S3ZAC).
COMTRMVAL (PROBABILITY/ 1.0E-4, LSLVAL * MSS-S3ZAC).
```

Repeat Steps 2 to 4 for each front-line system found in the sequence. If sequence cut sets are computed, the system cut sets for the individual fire area are combined in the same manner they were in Section D.1.2. However, it is not necessary to substitute for independent subtrees for the individual fire area sequences since the system cut sets for the

individual fire area are already in terms of primary events.

D.1.3.2 Sample SETS Programs for Fire Area Without Associated Randoms

Step 1: Read the transformation block mapping each primary event to its appropriate group as described in Section 3.5.5.1. (Note: There will be no primary events in Group 1 for this case.) Solve for the equations of the independent subtrees in terms of this transformation.

Input: Transformation data and block file from internal events analysis containing fault trees for front-line system stems and independent subtrees.

Products: Two blocks on the block file. The first, TRAN-FLS-S1ZD, contains the transformation equations for each primary event in the fire area of interest. The second, S1ZD-IST-EQNS, contains the equations for the independent subtrees in terms of the transformation data for the individual fire area.

Example SETS User Program:

```
PROGRAM$ S1ZD-P1.
COMMENT$ 3-19-87 $
BLKSTAT.
COMMENT$ PROGRAM TO PROCESS ISTS FOR SEQUENCE 1 FIRE AREA D $ COMMENT$
ANALYSIS $
COMMENT$ FIRE AREA D (I.E. FRZ-D)$
COMMENT$ ---------------------------------------------------- $
RDBLK (TRAN-FRZ-S1ZD).
LDBLK (TRAN-FRZ-S1ZD).
GENFTEQN (METHOD2$ MERGED-IND-ST-F2 / S1ZD-IST-EQNS).
BLKSTAT.
@                                                    (Record Mark)
BLOCK$ TRAN-FRZ-S1ZD.
COMMENT$ TRANSFORMATION BLOCK FOR FRZ-D (AFTER CABLE INFO) $
COMMENT$ FIRE AREA D -- 6-30-87 $
COMMENT$ INCLUDE EVENTS NOT HAVING LOCATIONS BUT NECESSARY FOR $ COMMENT$
PROPER AREA ANALYSIS FOR FRZ-D 3-17-87 $
COMMENT$ EXTERNAL EVENTS FOR INCLUSION IN AREA $
EE-MDC-DPS-A-RU = /EE-MDC-DPS-ARUX.
EE-MDC-DPS-B-RU = /EE-MDC-DPS-BRUX.
                .
                .
                .
EE-MDP-PSW-BC-R = /EE-MDP-PSW-BCRX.
EE-MDP-PSW-CA-R = /EE-MDP-PSW-CARX.
EE-CST-LVL      = /EE-CSTLVLX.
COMMENT$ FLAG EVENTS FOR INCLUSION IN AREA $
FLOW-CSS-A7A = /FLOW-CSSA7AX.
```

```
FLOW-CSS-B7A = /FLOW-CSSB7AX.
                .
                .
                .
RCICRMCOOL-FLAG = /RCICRMCOOLFLAGX.
SCSF06AA-DENER  = /SCSF06AADENERX.
NOFLOW-B1A      = /NOFLOWB1AX.
                .
                .
                .
COMMENT$ EVENTS IN FIRE AREA D -- FRZ-D $
12N016A-OOO-LFO = /12N016A-OOOLFOX.
12N016B-OOO-LFO = /12N016B-OOOLFOX.
                .
                .
                .
HAN100A-OOC-LFC = /HAN100A-OOCLFCX.
HAN100B-OOC-LFC = /HAN100B-OOCLFCX.
                .
                .
                .
TRL147AA-ROO-LFO = / TRL147AA-ROOLFOX.
TRL147BB-ROO-LFO = /TRL147BB-ROOLFOX.
                .
                .
                .
COMMENT$ EVENTS NOT IN FIRE AREA D $
ADARK10A-ROO-LFO = /OMEGA.
ADARK10B-ROO-LFO = /OMEGA.
ADARK12A-ROO-LFO = /OMEGA.
                .
                .
                .
PSW088BX-XOC-LF = /OMEGA.
                .
                .
                .
COMMENT$ FOR ALL SYSTEM AND SEQUENCES IN LOCATION ANALYSIS -- $
COMMENT$ INITIATORS ARE SET TO PHI  7-29-86 $
T1-IE = /OMEGA.
T2-IE = /OMEGA.
T3-IE = /OMEGA.
                .
                .
                .
COMMENT$ END OF TRANSFORMATION BLOCK DATA $
```

Step 2: Load transformation equations for primary events and independent subtrees with fault tree stem and solve for minimal cut sets of RCI system.

Input: Block file from previous step.

Products: Addition to block file of block RCI-S1ZD containing the minimal cut sets for fire area FRZ-D. Computer listing of minimal cut sets for fire area FRZ-D printed in disjunctive normal form.

Example SETS User Program:

```
PROGRAM$ S1ZD-P2.
COMMENT$ 7-1-87 $
COMMENT$ PROGRAM TO SOLVE RCIC SYSTEM FOR SEQUENCE 1, FIRE $
COMMENT$ AREA D $
COMMENT$ FIRE AREA D IS FRZ-D $
COMMENT$ LOAD TRANSFORMATION EQUATIONS AND IST-EQUATIONS $
COMMENT$ NO ASSOCIATED RANDOMS IN SEQUENCE 1, AREA D $
BLKSTAT.
LDBLK (RCI-NEW-FT, TRAN-FRZ-S1ZD, S1ZD-IST-EQNS).
COMMENT$ SET HIGH-DWPRESSURE TO OMEGA FOR ALL SYSTEMS EXCEPT $
COMMENT$ PCS (I.E. MSS) $
HIGH-DWPRESSURE = OMEGA.
SUBINEQN (21N037B-000, 21N037B-000).
REDUCEQN (21N037B-000, 21N037B-000).
                .
                .
                .
SUBINEQN (NOS-PIP-1E41YUVX, NOS-PIP-1E41YUVX).
REDUCEQN (NOS-PIP-1E41YUVX, NOS-PIP-1E41YUVX).
                .
                .
                .
SUBINEQN (1E221YA-250-LPW, 1E221YA-250-LPW).
REDUCEQN (1E221YA-250-LPW, 1E221YA-250-LPW).
FRMBLK (RCI-1).
                .
                .
                .
SUBINEQN (C0DG01F-PLG-T, C0DG01F-PLG-T).
REDUCEQN (C0DG01F-PLG-T, C0DG01F-PLG-T).
FRMBLK (RCI-2).
DLTBLK (RCI-1).
                .
                .
                .
SUBINEQN (RCIF-10F1P, RCI-S1ZD).
REDUCEQN (RCI-S1ZD, RCI-S1ZD).
FRMBLK (RCI-S1ZD * ONLY$ RCI-S1ZD).
DLTBLK (RCI-2).
PRTEQNDNF (RCI-S1ZD).
```

APPENDIX E

Location Information

E.0 INTRODUCTION

This appendix contains tables of information containing the: (1) location to fire area mapping (pages E-3 to E-6), (2) the cable to cable routing point mapping (pages E-7 to E-58), (3) the cable routing point to location mapping (pages E-59 to E-93), and (4) the fault tree basic event to location and relevant cable mapping (pages E-94 to E-180). With this information, any event or cable can be traced to its locations and fire areas or all components or cables can be identified within any fire area or location. All of these files and additional files with the information sorted or evaluated in various ways are on the computer and can be obtained through the NRC if needed.

Table E.1 Location to Fire Area Mapping

Location	Fire Area	Location	Fire Area
LOC-1	FRZ-C,FRZ-D	LOC-3B1-1	FRZ-D
LOC-2A	FRZ-C	LOC-3B2-1	FRZ-D
LOC-2B1	FRZ-C	LOC-3B2-2	FRZ-D
LOC-2B1-1	FRZ-C	LOC-3B2-3	FRZ-D
LOC-2B2-1	FRZ-C	LOC-3B2-4	FRZ-D
LOC-2B2-2	FRZ-C	LOC-3B2-5	FRZ-D
LOC-2B2-3	FRZ-C	LOC-3C-1	FRZ-D
LOC-2B2-4	FRZ-C	LOC-3C-2	FRZ-D
LOC-2B2-5	FRZ-C	LOC-3C-3	FRZ-D
LOC-2C-1	FRZ-C	LOC-3C-4	FRZ-D
LOC-2C-2	FRZ-C	LOC-3C-5	FRZ-D
LOC-2C-3	FRZ-C	LOC-3D	FRZ-D
LOC-2C-4	FRZ-C	LOC-3D-1	FRZ-D
LOC-2C-5	FRZ-C	LOC-3E	FRZ-D
LOC-2D	FRZ-C	LOC-3F-1	FRZ-D
LOC-2D-1	FRZ-C	LOC-3F-2	FRZ-D
LOC-2E	FRZ-C	LOC-3G-1	FRZ-D
LOC-2F-1	FRZ-C	LOC-3G-2	FRZ-D
LOC-2F-2	FRZ-C	LOC-3G-3	FRZ-D
LOC-2G-1	FRZ-C	LOC-3G-4	FRZ-D
LOC-2G-2	FRZ-C	LOC-3H1	FRZ-D
LOC-2G-3	FRZ-C	LOC-3H2	FRZ-D
LOC-2G-4	FRZ-C	LOC-3H3	FRZ-D
LOC-2H1	FRZ-C	LOC-3H4	FRZ-D
LOC-2H2	FRZ-C	LOC-3H5	FRZ-D
LOC-2H3	FRZ-C	LOC-3I1	FRZ-D
LOC-2H4	FRZ-C	LOC-3I2	FRZ-D
LOC-2H5	FRZ-C	LOC-3I3	FRZ-D
LOC-2I1	FRZ-C	LOC-3I4	FRZ-D
LOC-2I2	FRZ-C	LOC-3I5	FRZ-D
LOC-2I3	FRZ-C	LOC-3I6	FRZ-D
LOC-2I4	FRZ-C	LOC-3J	FRZ-B
LOC-2I5	FRZ-C	LOC-3K	FRZ-E
LOC-2I6	FRZ-C	LOC-4A-1	FRZ-F
LOC-2J	FRZ-A	LOC-4A-10	FRZ-F
LOC-2K	FRZ-E	LOC-4A-11	FRZ-F
LOC-3A	FRZ-D	LOC-4A-12	FRZ-F
LOC-3B1	FRZ-D	LOC-4A-13	FRZ-F

Table E.1 Location to Fire Area Mapping (Continued)

Location	Fire Area	Location	Fire Area
LOC-4A-14	FRZ-F	LOC-4F1	FRZ-X
LOC-4A-2	FRZ-F	LOC-4F2	FRZ-Y
LOC-4A-3	FRZ-F	LOC-4F3	FRZ-Z
LOC-4A-4	FRZ-F	LOC-5A1	FRZ-E
LOC-4A-5	FRZ-F	LOC-5A1-1	FRZ-E
LOC-4A-6	FRZ-F	LOC-5A1-2	FRZ-E
LOC-4A-7	FRZ-F	LOC-5A2	FRZ-E
LOC-4A-8	FRZ-F	LOC-5A2-1	FRZ-E
LOC-4A-9	FRZ-F	LOC-5A2-2	FRZ-E
LOC-4B-1	FRZ-F	LOC-5A3	FRZ-E
LOC-4B-2	FRZ-F	LOC-5A3-1	FRZ-E
LOC-4B-3	FRZ-F	LOC-5A3-10	FRZ-E
LOC-4B-4	FRZ-F	LOC-5A3-11	FRZ-E
LOC-4B-5	FRZ-F	LOC-5A3-12	FRZ-E
LOC-4B-6	FRZ-F	LOC-5A3-13	FRZ-E
LOC-4B-7	FRZ-F	LOC-5A3-14	FRZ-E
LOC-4B-8	FRZ-F	LOC-5A3-15	FRZ-E
LOC-4B-9	FRZ-F	LOC-5A3-16	FRZ-E
LOC-4C1	FRZ-G	LOC-5A3-17	FRZ-E
LOC-4C1-1	FRZ-F	LOC-5A3-18	FRZ-E
LOC-4C2	FRZ-H	LOC-5A3-19	FRZ-E
LOC-4C3	FRZ-I	LOC-5A3-2	FRZ-E
LOC-4C4	FRZ-J	LOC-5A3-3	FRZ-E
LOC-4C5	FRZ-K	LOC-5A3-4	FRZ-E
LOC-4D1-1	FRZ-L	LOC-5A3-5	FRZ-E
LOC-4D1-2	FRZ-M	LOC-5A3-6	FRZ-E
LOC-4D2	FRZ-N	LOC-5A3-7	FRZ-E
LOC-4D3	FRZ-O	LOC-5A3-8	FRZ-E
LOC-4D4	FRZ-P	LOC-5A3-9	FRZ-E
LOC-4E1-1	FRZ-Q	LOC-5A4	FRZ-F
LOC-4E1-2	FRZ-R	LOC-5B1	FRZ-E
LOC-4E2-1	FRZ-S	LOC-5B10	FRZ-E
LOC-4E2-2	FRZ-T	LOC-5B11	FRZ-E
LOC-4E3	FRZ-U	LOC-5B12	FRZ-E
LOC-4E3-2	FRZ-V	LOC-5B13-1	FRZ-BB
LOC-4E4	FRZ-W	LOC-5B13-2	FRZ-AA
LOC-4E4-1	FRZ-AC	LOC-5B13-3	FRZ-F

Table E.1 Location to Fire Area Mapping (Continued)

Location	Fire Area	Location	Fire Area
LOC-5B2	FRZ-E	LOC-5D5	FRZ-E
LOC-5B3	FRZ-E	LOC-5D6	FRZ-EE
LOC-5B4	FRZ-E	LOC-5E1	FRZ-E
LOC-5B5	FRZ-E	LOC-5E2	FRZ-E
LOC-5B6	FRZ-E	LOC-6A	FRZ-FF
LOC-5B7	FRZ-E	LOC-6B1	FRZ-FF
LOC-5B8	FRZ-E	LOC-6B2	FRZ-FF
LOC-5B9	FRZ-E	LOC-6B3	FRZ-FF
LOC-5C1	FRZ-E	LOC-6C	FRZ-FF
LOC-5C10	FRZ-E	LOC-6D	FRZ-E
LOC-5C11	FRZ-E	LOC-6E	FRZ-E
LOC-5C11-1	FRZ-E	LOC-7A1	FRZ-GG
LOC-5C11-10	FRZ-E	LOC-7A2	FRZ-GG
LOC-5C11-11	FRZ-E	LOC-7A3	FRZ-GG
LOC-5C11-12	FRZ-E	LOC-7B1	FRZ-HH
LOC-5C11-2	FRZ-E	LOC-7B2	FRZ-II
LOC-5C11-3	FRZ-E	LOC-7B3	FRZ-JJ
LOC-5C11-4	FRZ-E	LOC-7B4	FRZ-KK
LOC-5C11-5	FRZ-E	LOC-7B5	FRZ-LL
LOC-5C11-6	FRZ-E	LOC-7B6	FRZ-MM
LOC-5C11-7	FRZ-E	LOC-7C1	FRZ-HH
LOC-5C11-8	FRZ-E	LOC-7C2	FRZ-II
LOC-5C11-9	FRZ-E	LOC-7C3	FRZ-JJ
LOC-5C2	FRZ-E	LOC-7C4	FRZ-CC
LOC-5C3	FRZ-E	LOC-7C5	FRZ-CC
LOC-5C4	FRZ-E	LOC-7C6	FRZ-CC
LOC-5C5	FRZ-E	LOC-8A1	FRZ-NN
LOC-5C6	FRZ-E	LOC-8A2	FRZ-NN
LOC-5C7	FRZ-E	LOC-8B1	FRZ-OO
LOC-5C8	FRZ-E	LOC-8B2	FRZ-PP
LOC-5C9	FRZ-E	LOC-8B3	FRZ-QQ
LOC-5D1	FRZ-CC	LOC-8B4	FRZ-RR
LOC-5D2	FRZ-DD	LOC-8C1	FRZ-OO
LOC-5D3	FRZ-E	LOC-8C2	FRZ-PP
LOC-5D3-1	FRZ-E	LOC-8C3	FRZ-DD
LOC-5D4	FRZ-E	LOC-8C4	FRZ-DD
LOC-5D4-1	FRZ-E	LOC-8C5	FRZ-DD

Table E.1 Location to Fire Area Mapping (Concluded)

Location	Fire Area
LOC-9A	FRZ-VV *
LOC-9B	FRZ-VV *
LOC-9C1	FRZ-VV *
LOC-9C2	FRZ-SS *
LOC-9C3	FRZ-VV *
LOC-9C4	FRZ-VV *
LOC-9D1	FRZ-VV *
LOC-9D2	FRZ-TT *
LOC-9E	FRZ-UU *
LOC-10A1	FRZ-WW **
LOC-10A2	FRZ-WW **
LOC-10B1	FRZ-WW **
LOC-10B2	FRZ-XX **
LOC-10B3	FRZ-YY **
LOC-10B4	FRZ-ZZ **
LOC-10C1	FRZ-WW **
LOC-10C2	FRZ-WW **
LOC-10C3	FRZ-WW **
LOC-LSH	FRZ-LSH
LOC-RSH	FRZ-RSH
LOC-OG	/OMEGA **
LOC-OUTSIDE	/OMEGA

* All of these areas are in the service building. The only equipment modeled was in LOC-9A. The other areas were not used.

** LOC-OG represents the Off-Gas building and is composed of the following fire areas, LOC-10A1, 10A2, 10B1, 10B3, 10B4, 10C1, 10C2, 10C3, which were not used in this analysis since only one component in the modeled systems was in these areas (area 10A1, MCC 234Y) and this was only because of its feedback effect on MCC 242Y not because any equipment important to the analysis was in LOC-OG.

Table E.2 Cable to Cable Routing Point Equations

Cable	Routing
2AP054	=278D+277D+276D+312D+275BD+274B+273B+272B+214B+213B+212B+211B+225B.
2AP056	=278D+277D+276D+311D.
2AP063	=279D+280D+182D+R124+192D+R125+342B+344B+345B+346B+347B+348B+349B+350B +R161+537F+520F+519F+566F+567F+568F+590F.
2AP064	=279D+280D+182D+R124+192D+R125+342B+344B+345B+346B+347B+348B+349B+350B +R161+537F+520F+519F+566F+567F+568F+590F.
2AP065	=277D+276D+312D+275BD+274B+273B+272B+214B+213B+212B+211B+225B.
2AP081	=484H+483H+499H+498CH+346C+347C+348C+349C+350C+R161+537F+520F+519F+566F +567F+568F+590F.
2AP082	=484H+483H+499H+498CH+346C+347C+348C+349C+350C+R161+537F+520F+519F+566F +567F+568F+590F.
2AP083	=484H+483H+499H+498CH+346C+347C+348C+349C+350C+371D+372D+380D+381D+382D +383D+394D.
2AP084	=484H+483H+499H+498CH+346C+347C+348C+349C+350C+371D+372D+380D+381D+382D +383D+394D.
2AP086	=179D+180D+181D+R124+192D+R125+342B+344B+345B+346B+347B+348B+349B+350B +R161+537F+520F+519F+566F+567F+568F+590F.
2AP087	=179D+180D+181D+R124+192D+R125+342B+344B+345B+346B+347B+348B+349B+350B +R161+537F+520F+519F+566F+567F+568F+590F.
2AP088	=179D+180D+181D+182D+280D+279D+278D+277D+276D+312D+275BD+274B+273B+272B +214B+213B+212B+211B+225B.
2AP089	=179D+180D+181D+182D+280D+279D+278D+277D+276D+312D+275BD+274B+273B+272B +214B+213B+212B+211B+225B.
2AP093	=285C.
2AP094	=285C+284C+283C.
2AP097	=284C+283C+282C+281C+279C+278C+277C+276C+275AC+274A+R127+R128+619D+R186 +R185+695C+658C+659C+660C+661C+662C+663C+664C+665C+666C+667C+668C+669C +684C.
2AP098	=284C+283C+282C+281C+279C+278C+277C+276C+275AC+274A+R127+R128+619D+R186 +R185+695C+658C+659C+660C+661C+662C+663C+664C+665C+666C+667C+668C+669C +684C.
2AP099	=179D+180D+181D+182D+280D+279D+278D+277D+274B+276D+312D+275BD+274B+273B +272B+214B+213B+212B+211B+225B.
2AP104	=282C+281C+279C+278C+277C+276C+275AC+274A+R127+R128+619D+R186+R185+695C +658C+659C+660C+661C+662C+663C+664C+665C+666C+667C+668C+669C+684C.
2AP105	=179D+180D+181D+182D+280D+279D+278D+277D+276D+312D+275BD+274B+273B+272B +214B+213B+212B+211B+225B.
2AP110	=283C+282C+281C+279C+278C+277C+310C.
2AP122	=335B+336B+496BH+495H+485H+484H+483H+499H+498CH+346C+347C+348C+349C+350C +371D+372D+380D+381D+382D+383D+394D.
2AP123	=488B+487B+486B+485B+484B+483B+R162+481B+480B+479B+419B+420B+445B+446B +447B+R168+R196+581C+580C+589C+588C+587C+599C+592C+591C.

Table E.2 Cable to Cable Routing Point Equations (Continued)

Cable	Routing
2AP124	=488B+487B+486B+485B+484B+483B+R162+481B+480B+479B+419B+420B+445B+446B +447B+R168+R196+581C+580C+589C+588C+587C+599C+592C+591C.
2AP125	=335B+336B+496BH+495H+485H+484H+483H+499H+498CH+346C+347C+348C+349C+350C +371D+372D+380D+381D+382D+383D+394D.
2AP133	=487B+486B+485B+484B+483B+R162+481B+480B+479B+419B+420B+445B+446B+447B +R168+R196+581C+580C+589C+588C+587C+599C+592C+591C.
2AP140	=276B+313BE+186E+187E+188E+1836E+1837E+1838E+1839E+1840E+1841BE+1827B +1826B+1825B+1886B+R550+1886D+1892D.
2AP141	=278D+279D+280D+182D+R124+192D+R125+342B+344B+345B+346B+347B+348B+349B +350B+R161+537F+520F+519F+566F+567F+568F+590F.
2AP142	=278D+279D+280D+182D+R124+192D+R125+342B+344B+345B+346B+347B+348B+349B +350B+R161+537F+520F+519F+566F+567F+568F+590F.
2AP145	=189B+168B+167B+166B+165B+164B+1979B+1980B+1981B+1982B+1983B+1984B+1989B +R581+2104B+2055B+2054B+2053B+2052B+2051B+2050B+2049B+2101B+R609+2101E +2102E.
2AP146	=180D+181D+R124+192D+R125+342B+344B+345B+346B+347B+348B+349B+350B+R161 +537F+520F+519F+566F+567F+568F+590F.
2AP147	=180D+181D+R124+192D+R125+342B+344B+345B+346B+347B+348B+349B+350B+R161 +537F+520F+519F+566F+567F+568F+590F.
2AP149	=278B+279B+280B+182B+181B+190AB+169A+168A+167A+166A+165A+164A+1990A+1991A +1992A+1993A+1994A+1995A+1936B+1977B+R572+2098A+2041A+2040A+2039A+2038A +2201A+2113A+R597+2114A+2115AB+2122C.
2AP151	=335A+336A+337A+338A+R140+512A+508A+507A+506A+505A+504A+2061AB+2107B +2073B+2108B+2109B+2186B.
2AP152	=335B+336B+343BF+344F+345F+351F+352F+353F+354F+R152+541E+540E+601E+600E +592E+591E.
2AP153	=335B+336B+343BF+344F+345F+351F+352F+353F+354F+R152+541E+540E+601E+600E +592E+591E.
2AP155	=283A+284A+294A+295A+296A+297A+298A+1333A+1334A+1335A+1339A+1340A+1349A +1350A+1351A+1352A+1370AB+1364B+1365B+1366B+1367B+R412+R436+1425A+1424A +1428A.
2AP156	=341B+R139+530E+529E+531E+R180+701B+703B+702B+R202+719D+711D+712D+R214 +713G.
2AP157	=282C+281C+279C+278C+277C+276C+275AC+274A+R127+R128+619D+R186+R185+695C +658C+659C+660C+661C+662C+663C+664C+665C+666C+667C+668C+669C+684C.
2AP158	=282C+281C+279C+278C+277C+276C+275AC+274A+R127+R128+619D+R186+R185+695C +658C+659C+660C+661C+662C+663C+664C+665C+666C+667C+668C+669C+684C.
2AP159	=334B+333B+784B+325B+324B+323B+2111B+R612+2110BC+2075C+2074C+2073C+2108C +2109C.
2AP160	=486A+485A+484A+483A+482A+471A+470A+469A+468A+467A+466A+454A+R172+453A +1026A+1037A+1038A+1039A+1040A+1041A+1042A+1043A+1044A+1045A+1046A+R306 +R338+1120A+1119A+1121A+R349+1159A+1158A+1162A+R360+1144D+1146D+1145D.

Table E.2 Cable to Cable Routing Point Equations (Continued)

Cable	Routing
2AP161	=486A+485A+484A+483A+482A+471A+470A+469A+468A+467A+466A+454A+R172+453A +1026A+1037A+1028A+1039A+1040A+1041A+1042A+1043A+1044A+1656D+1657D+1658D +1659D+1663D+1665D+1666D.
2AP162	=486B+485B+484B+483B+R162+481B+480B+479B+419B+420B+445B+446B+447B+R168 +R196+581C+580C+589C+588C+587C+599C+592C+591C.
2AP163	=486B+485B+484B+483B+R162+481B+480B+479B+419B+420B+445B+446B+447B+R168 +R196+581C+580C+589C+588C+587C+599C+592C+591C.
2AP164	=283A+284A+294A+299A+300A.
2AP165	=282A+402A+802A+801A.
2AP166	=282C+281C+279C+278C+277C+276C+275AC+274A+R127+R128+619D+R186+R185+695C +658C+659C+660C+661C+662C+663C+664C+665C+666C+667C+668C+669C+684C.
2AP167	=282C+281C+279C+278C+277C+276C+275AC+274A+R127+R128+619D+R186+R185+695C +658C+659C+660C+661C+662C+663C+664C+665C+666C+667C+668C+669C+684C.
2AP168	=799A+800AE.
2AP169	=799A+800AE+476E+475E+798E.
2AP170	=487B+486B+485B+484B+483B+R162+481B+480B+479B+419B+420B+445B+446B+447B +R168+R196+581C+580C+589C+588C+587C+599C+592C+591C.
2AP171	=487B+486B+485B+484B+483B+R162+481B+480B+479B+419B+420B+445B+446B+447B +R168+R196+581C+580C+589C+588C+587C+599C+592C+591C.
2AP184	=488B+487B+486B+485B+484B+494B.
2AP188	=283C+793CD+794D+305D+297D+298D+1333D+1334D+1335D+1339D+1340D+1349D+1359D +1360D+1361D+1485D+1362D+R419+R430+1427B+1421B+1422B+1423B+1428B+1429B +1430B.
2AP189	=483G+484G+485G+496AG+336A+335A+334A+333A+784A+325A+324A+323A+2111A+R613 +2110AB+2075B+2074B+2073B+2072B+2071B+2070B+2069B+2068B+2067B+2066B +2065B+2064B+2063B+2197B+2042B+2041B+2040B+2039B+2038B+2201B+2037B +2113B+R595+2114B+R599+2115F+2116F+2117F.
2AP190	=483G+498AG+497A+329A+R145+518A+517A+516A+515A+514A+513A+1996A+1997A +1998A+2000A+2002A+2003A+2004A+2006A+2007A+R582+R554+1829B+1828B+1827B +1894B+1895B+1896B+1897B+1899B+R557+2139A+2140A+2147A+R591+2147D+2143D.
2AP191	=483H+499H+498CH+346C+347C+348C+349C+350C+R161+537F+520F+519F+566F+567F +568F+590F.
2AP192	=483H+499H+498CH+346C+347C+348C+349C+350C+R161+537F+520F+519F+566F+567F +568F+590F.
2AP200	=486B+485B+484B+483B+R162+481B+480B+479B+419B+441B+440B+439B+438B+425B +426B+R166+572D+1098B+1088B+1087B+1057B+1058B+1059B+1060B+1061B+1062B +1063B+1064B+R336+R347+1150B+1151B+1152B+1153B+1154B+1162B+R361+1144E +1146E.
2AP201	=486B+485B+484B+483B+R162+481B+480B+479B+419B+441B+440B+439B+438B+425B +426B+R166+572D+1098B+1088B+1087B+1057B+1058B+1066B+R314+1036B+1027B +1037B+1038B+1039B+1040B+1041B+1042B+1043B+1044B+1048B+R309+1655B+1656E +1657E+1658E+1659E+1663E+1665E+1666E.

Table E.2 Cable to Cable Routing Point Equations (Continued)

Cable	Routing
2AP204	=283C+793CD+794D+303D.
2AP205	=283C+793CD+794D+302D.
2AP209	=277D+278D+279D+280D+182D+R124+192D+R125+342B+344B+345B+346B+347B+348B +349B+350B+R161+537F+520F+519F+566F+567F+568F+590F.
2AP210	=277D+278D+279D+280D+182D+R124+192D+R125+342B+344B+345B+346B+347B+348B +349B+350B+R161+537F+520F+519F+566F+567F+568F+590F.
2AP211	=278B+279B+280B+182B+181B+180B+179B+R122+340A+R136+536A+535A+532A+R182 +R201+719C+710C+709C+720C+R211+721C.
2AP212	=278B+279B+280B+183B+184B+185B+175B+176B+177B+1818B+1819B+1820B+1821B +1822B+1823B+1824B+1825B+1826B+1894B+1895B+1896B+1897B+1899B+R557+2139A +2038A.
2AP232	=483H+499H+498CH+346C+347C+348C+349C+350C+R161+537F+520F+519F+566F+567F +568F+590F.
2AP244	=303D+794D+306D+307AD+R131+625D+R190+R189+689C+688C+687C+685C+684C+679C.
2AP245	=303D+794D+306D+307AD+R131+625D+R190+R189+689C+688C+687C+685C+684C+679C.
2AP246	=488B+489B+490B+491B+788BF+478F.
2AP247	=488B+489B+490B+491B+788BF+478F+477F+476F.
2AP248	=301D+302D+794D+306D+307AD+R131+625D+R190+R189+689C+688C+687C+685C+684C +679C.
2AP249	=301D+302D+794D+306D+307AD+R131+625D+R190+R189+689C+688C+687C+685C+684C +679C.
2AP251	=477F+476F+475F+797F+473F+482F+480F+458F+459F+457F+447B+R168+R196+581C +580C+589C+588C+587C+599C+592C+591C.
2AP252	=477F+476F+475F+797F+473F+482F+480F+458F+459F+457F+447B+R168+R196+581C +580C+589C+588C+587C+599C+592C+591C.
2AP255	=475F+797F+473F+482F+480F+458F+459F+457F+447B+R168+R196+581C+580C+589C +588C+587C+599C+592C+591C.
2AP256	=475F+797F+473F+482F+480F+458F+459F+457F+447B+R168+R196+581C+580C+589C +588C+587C+599C+592C+591C.
2AP286	=1886D+R550+1886B+1825B+1826B+1827B+1828B+1829B+R554+2007C+2008C+2009C.
2AP288	=2109B+2108B+2072B+2071B+2104B+R581+1989B+1984B+1983B+1982B+1981B+1980B +1979B+164B+165B+166B+167B+168B+189B+180B+190AB+170A+171A.
2AP297	=2102E+2101E+R609+2101B+2049B+2050B+2051B+2052B+2053B+2054B+2055B+2104B +R581+1989B+1984B+1983B+1982B+1986B+R578+62A+63A.
2AP301	=2163A+2158A+2193A+2177A+R617+2177D+2178D.
2AP305	=2117F+2116F+2115F+R599+2114B+R595+2113B+2037B+2201B+2038B+2093B+2094B +2095B+R606+R568+1973A+1955A+1954A+1953A+1952A+1951A+1928B+1927B+1926B +1925B+1924B+1923B+1922B+1921B+1920B+R562+1918B+1917B+1916B+1915B+1914B +1895B+1894B+1826B+1825B+1824B+1823B+1822B+1821B+1820B+1819B+1818B+177B +176B+175B+185B+173A.
2AP307	=2120C+R601+2120B+2115AB+2114A+R597+2113A+2201A+2038A+2039A+2040A+2041A +2042A+2043A+2046A+2047B+2048B+2049B+2050B+2051B+2052B+2053B+2054B+2055B +2056B+2057B+2058B.

Table E.2 Cable to Cable Routing Point Equations (Continued)

Cable	Routing
2AP312	=1430A+1429A+1428A+1424A+1425A+R436+1410A+1409A+1414A+1405A+1404A+1400A +1401A+R432+1401E+1406E.
2AP315	=301B+302B+305B+297B+298B+1333B+1334B+1335B+1339B+1340B+1349B+1359B+1360B +1361B+1485B+1363B+1364B+1365B.
2AP316	=301B+302B+305B+297B+298B+1333B+1334B+1335B+1339B+1343B+R423+1344B+1345B.
2AP317	=303B+305B+297B+298B+1333B+1334B+1335B+1339B+1340B+1349B+1359B+1368B +1352B+1353B+1354B+1355B+1356B+1357B+R415+1384A+1383A+1385A.
2AP318	=304B+795AB+283A+282A+402A+802A+309A.
2AP319	=304B+795AB+283A+282A+402A+802A+309A.
2AP320	=1146D+1144D+R360+1162A+1155A+1154A+1160A+1161A+R362+1148D.
2AP321	=1146D+1144D+R360+1162A+1155A+1154A+1153A+1152A+1151A+1150A+R346+R335 +1064A+1063A+1078A+1080A+1081A.
2AP328	=476E+475E+797E+473E+472E+471E+470E+469E+468E+467E+465E+R174+464E+1050A +1051A+R318+1094A+1181A+1086A+1058A+1065A+1066A+R313+1036A+1028A+1029A +1033A+R320+1033D+1034D+1035D.
2AP330	=797E+473E+472E+471E+470E+469E+468E+467E+465E+R174+464E+1050A+1051A+R318 +1094A+1181A+1069A+1096A.
2AP332	=478E+477E+800AE+474CA+487A+488A+489A.
2AP333	=478E+477E+800AE+474CA+487A+488A+489A+490A.
2AP381	=496AG+337A+338A+R140+512A+508A+507A+506A+505A+504A+2061AB+2060B+2059B +2058B+2057B+2105B+R610+2105F.
2AP424	=2163A+2158A+2179A+R589+2146A+2141A+2132A+2138A+2139A+R557+1899B+1897B +1909B+1910B+1911B+1912B+1913B+R531+1802A+1787A+1786A+1785A+1784A+1799A +R523+1800A.
2AP447	=179D+178D+R123+340B+R137+536F+535F+534F+621F+532F+R183+702B+703B+643B +642B+641B+R205+718G+R218+718D+739D+732D+731D+730D+729D+R220+728B+727B +R210+766B+765B+774C+773C+740C.
2AP448	=179D+180D+181D+182D+280D+279D+278D+277D+276D+312D+313DF+186F+187F+188F +1836F+1837F+1838F+1839F+1840F+1841F+1827F+1894F+1895F+1914F+1915F+1916F +1917F+1918F+R563+1920F+1922F+1923F+1924F+1925F+1926F+1949C+1950C+1951C +1952C+1953C+1954C+1955C+1956C+1957C+1958C+1959C+2207C+1960C+1940F+1978F +R577+2100C+2048C+2101C+R608+2101F+2102F.
2AP460	=484H+483H+500H+501H.
2AP462	=483H+484H+485H+495H+496BH+343BF+344F+345F+351F+352E+369E+368E+367E+366E +R542+1861L+1862L+1863L+1864L+1865L+1866L+1867L+1829L+1830L+1831L+1856L +1893L+R556+2133B+2135B+2137B+2138B+2140B+2147B+R592+2147E+2143E+2144E.
2AP463	=483H+484H+485H+495H+496BH+336B+335B+334B+333B+784B+325B+324B+323B+2111B +R612+2110BC+2075C+2074C+2073C+2072C+2071C+2070C+2069C+2068C+2067C+2066C +2065C+2064C+2063D+2197D+2042D+2041D+2040D+2039D+2038D+2201D+2037D+2113D +R594+2114D+R600+2115G+2116G.
2AP466	=277D+278D+279D+280D+182D+181D+180D+179D+178D+R123+340B+R137+536F+535F +534F+621F+532F+R183+R202+719D+710D+709D+720D+R212+721D.

Table E.2 Cable to Cable Routing Point Equations (Continued)

Cable	Routing
2AP467	=279D+280D+183D+184D+185D+186D+R133+187D+188D+1836D+1837D+1838D+1839D +1840D+1841CD+1828C+1853C+R555+2007B+2006B+2005B+2119D+2020B+2171B+2166B +2165B+2164B+2159B+2163B.
2AP474	=304B+795AB+283A+282A+281A+279A+278A+277A+310A.
2AP475	=301B+302B+303B+795AB+283A+282A+281A+279A+278A+277A+310A.
2AP476	=477E+800AE+799A+487A+486A+485A+484A+494A.
2AP477	=476E+800AE+799A+487A+486A+485A+484A+494A.
2AP478	=279D+280D+183D+184D+185D+186D+187D+188D+1836D+1837D+1838D+1839D+1840D +1841CD+1827C+1826C+1889C+R552+1889E+1891E.
2AP479	=279D+280D+182D+191CD+170C+169C+168C+167C+166C+165C+164C+1990C+1991C +1981D+1982D+1983D+1984D+1989D+R624+2104D+2069D+2068D+2067D+2066D+2091CD +2090C+2089C+2088C+2087C+2086C+2094CD+2093D+2038D+2201D+2037D+2113D+R594 +2114D+2115D+2116D+2119D+2120D+R627+2120E.
2AP506	=/OMEGA.
2AP507	=179D.
2AP560	=284C+283C+282C+281C+279C+278C+277C+276C+275AC+274A+R127+273A+271A+267F +266F+265F.
2AP562	=284C+283C+282C+281C+279C+278C+277C+276C+275AC+274A+R127+R128+619D+R186 +R185+695C+658C+681C+672C+673C+674C+675C+676C+677C+678C+679C.
2AP563	=488B+799BD+474D+473D+482D+480D+458D+503BD+441B+440B+450G+444B+443B.
2AP564	=488B+799BD+474D+473D+482D+480D+458D+503BD+420B+R179+606C+588C+587C+599C +592C+591C+590C.
2AP565	=488B+799BD+474D+473D+482D+480D+458D+503BD+420B+R179+606C+588C+587C+599C +592C+591C+590C.
2CB011	=2097F+2095F+R569+1973C+1955C+1954C+1953C+1952C+1951C+1950C+1949C+1948C +1947C+1924F+1923F+1922F+1920F+1919F+R561+R535+1804B+1790B+1781B+1782B +R517+1739B+1741B+1747B.
2CB012	=2097F+2095F+R607+2095CD+2094CD+2093C+2038C+2201C+2037C+2036C+2035C+2034C +2033C+2032C+2031C+2030C+2029C+2028C+2027C+2026C+2025C+2024C+2015C+2014C +2013C+2012C+2011C+2010C+511C+556C+557CH+524H+523FH+543F+598F+597F+596F +595F+594F+593F.
2CB013	=2097F+2095F+R569+1973C+1955C+1954C+1953C+1952C+1951C+1950C+1949C+1948C +1925F+1924F+1923F+1922F+1920F+1919F+R561+R535+1804B+1790B+1791B+1792B +1793B+1794B+1814B.
2CB015	=1956C+1955C+1954C+1953C+1952C+1951C+1950C+1949C+1948C+1947C+1924F+1923F.
2CB016	=2097F+2095F+R607+2095CD+2094CD+2093C+2038C+2201C+2037C+2036C+2035C+2034C +2033C+2032C+2031C+2030C+2029C+2028C+2027C+2026C+2025C+2024C+2015C+2014C +2013C+2012C+2011C+2010C+511C+556C+557CH+524H+523FH+543F+598F+597F+596F +595F+594F+593F.
2CB017	=2097F+2095F+R569+1973C+1955C+1954C+1953C+1952C+1951C+1950C+1949C+1948C +1947C+1924F+1923F+1922F+1920F+1919F+R561+R535+1804B+1790B+1781B.
2CB019	=2097F+2095F+R569+1973C+1955C+1954C+1953C+1952C+1951C+1950C+1949C+1948C +1947C+1924F+1923F+1922F+1920F+1919F+R561+R535+1804B+1790B+1781B+1782B +R517+1739B+1741B+1742B+1743B+1748B.

Table E.2 Cable to Cable Routing Point Equations (Continued)

Cable	Routing
2CB020	=2097F+2095F+R607+2095CD+2094CD+2093C+2038C+2201C+2037C+2036C+2035C+2034C +2033C+2032C+2031C+2030C+2029C+2028C+2027C+2026C+2025C+2024C+2015C+2014C +2013C+2012C+2011C+2010C+511C+556C+557CH+524H+523FH+543F+598F+597F+596F +595F+594F+593F.
2CB021	=2097F+2095F+R569+1973C+1955C+1954C+1953C+1952C+1951C+1950C+1949C+1948C +1925F+1924F+1923F+1922F+1920F+1919F+R561+R535+1804B+1790B+1791B+1792B +1793B+1794B+1814B.
2CB023	=1956C+1955C+1954C+1953C+1952C+1951C+1950C+1966F+1967F.
2CB024	=2097F+2095F+R607+2095CD+2094CD+2093C+2038C+2201C+2037C+2036C+2035C+2034C +2033C+2032C+2031C+2030C+2029C+2028C+2027C+2026C+2025C+2024C+2015C+2014C +2013C+2012C+2011C+2010C+511C+556C+557CH+524H+523FH+543F+598F+597F+596F +595F+594F+593F.
2CB025	=2097F+2095F+R569+1973C+1955C+1954C+1953C+1952C+1951C+1950C+1949C+1948C +1947C+1924F+1923F+1922F+1920F+1919F+R561+R535+1804B+1790B+1781B.
2CB027	=1808B+1807B+1782B+R517+1739B+1741B+1742B+1743B+1744B+1745B.
2CB028	=1808B+1807B+1781B+1790B+1804B+R535+R561+1919F+R563+1918F+1917F+1916F +1915F+1914F+1895F+1894F+1827F+1828F+1867F+1866L+1865L+1864L+1863L+1862L +1861L+R542+366E+367E+368E+369E+352E+R150+549E+548E+547E+560E+598E+597E +596E+595E+594E+593E.
2CB029	=1809B+1793B+1794B+1814B.
2CB031	=1809B+1793B+1794B+1795B+1796B+1797B+R538+R566+1967F+1966F+1928F+1929F.
2CB032	=1808B+1807B+1781B+1790B+1804B+R535+R561+1919F+R563+1918F+1917F+1916F +1915F+1914F+1895F+1894F+1827F+1828F+1867F+1866L+1865L+1864L+1863L+1862L +1861L+R542+366E+367E+368E+369E+352E+R150+549E+548E+547E+560E+598E+597E +596E+595E+594E+593E.
2CB033	=1808B+1807B.
2CB082	=2110DE+R614+2111D+323D+324D+325D+326D+327D+328D+355DG+356G+357G+364G +354G+371G+372G+380G+381G+401G+403G+404G.
2CB092	=2097F+2095F+R569+1973C+1955C+1954C+1953C+1952C+1951C+1950C+1949C+1948C +1925F+1924F+1923F+1922F+1920F+1919F+R561+R535+1804B+1790B+1791B+1792B +1793B+1794B+1814B.
2CB093	=2097F+2095F+R569+1973C+1955C+1954C+1953C+1952C+1951C+1950C+1949C+1948C +1947C+1924F+1923F+1922F+1920F+1919F+R561+R535+1804B+1790B+1781B.
2CB094	=2097F+2095F+R569+1973C+1955C+1954C+1953C+1952C+1951C+1950C+1949C+1948C +1925F+1924F+1923F+1922F+1920F+1919F+R561+R535+1804B+1790B+1791B+1792B +1793B+1794B+1814B.
2CB095	=2097F+2095F+R569+1973C+1955C+1954C+1953C+1952C+1951C+1950C+1949C+1948C +1947C+1924F+1923F+1922F+1920F+1919F+R561+R535+1804B+1790B+1781B.
2CB096	=1808B.
2CB097	=1808B+1809B+1793B+1794B+1814B.
2CB098	=1808B+1807B.
2CD010	=279B+280B+183B+184B+174A+175A+176A+177A+1818A+1819A+1820A+1821A+1822A +1823A+1885A+R549+1771A+1772A+1773A+1775A+1776A+1777A+1778A+1779A+1780A +1781A+1782A+R516+1739A+1740A.

Table E.2 Cable to Cable Routing Point Equations (Continued)

Cable	Routing
2CD011	=278D+279D+280D+182D+191CD+R124+192D+R125+342B+344B+345B+346B+R150+549E +548E+547E+560E+598E+597E+596E+595E+594E+593E.
2CD012	=278D+279D+280D+182D+191CD+R124+192D+R125+342B+344B+345B+346B+R150+549E +548E+547E+560E+598E+597E+596E+595E+594E+593E.
2CD018	=484G+485G+496AG+337A+338A+R140+512A+508A+509A+510A+511A+2010A+2011A +2012A+2013A+2014A+2021A+2005A+2006A+1830B+1831B+1832B+1833B+1893B+R521 +1798A+1757A+1783A+1784A+1774A+R528+1726A+1715A+1714A+1713A+1708A+1709A +1729A+1730A+1731A+1737A+1738A+1739A+1741A+1747A.
2CD019	=484H+485H+495H+496BH+337B+338B+339B+R141+512B+509B+510B+556B+557BG+524G +523EG+543E+598E+597E+596E+595E+594E+593E.
2CD020	=484H+485H+495H+496BH+337B+338B+339B+R141+512B+509B+510B+556B+557BG+524G +523EG+543E+598E+597E+596E+595E+594E+593E.
2CD026	=278B+279B+280B+182B+181B+190AB+170A+171A+172A+173A+174A+175A+176A+177A +1818A+1819A+1820A+1821A+1822A+1823A+1885A+R549+1751A+1771A+1772A+1773A +1774A+1785A+1786A+1787A+1788A+1789A+1790A+1781A+1782A+R516+1739A+1741A +1742A+1743A+1748A.
2CD027	=277D+278D+279D+280D+182D+191CD+R124+192D+R125+342B+344B+345B+346B+R154 +R150+549E+548E+547E+560E+598E+597E+596E+595E+594E+593E.
2CD028	=277D+278D+279D+280D+182D+191CD+R124+192D+R125+342B+344B+345B+346B+R150 +549E+548E+547E+560E+598E+597E+596E+595E+594E+593E.
2CD034	=484G+485G+496AG+337A+338A+R140+512A+508A+509A+510A+511A+2010A+2011A +2012A+2013A+2014A+2021A+2005A+2006A+2007A+R582+R554+1830B+1831B+1832B +1833B+1893B+R521+1798A+1757A+1756A+1755A+1754A+1753A+1752A+1751A+R528 +1726A+1715A+1714A+1713A+1708A+1709A+1729A+1730A+1731A+1737A+1738A+1739A +1741A+1742A+1743A+1744A+1745A.
2CD035	=485H+495H+496BH+337B+338B+339B+R141+512B+509B+510B+556B+557BG+524G+523EG +543E+598E+597E+596E+595E+594E+593E.
2CD036	=485H+495H+496BH+337B+338B+339B+R141+512B+509B+510B+556B+557BG+524G+523EG +543E+598E+597E+596E+595E+594E+593E.
2CD045	=676D+675D+674D+673D+672D+681D+658D+657D+648D+646BD+645B+644B+703B+702B +R183+532F+621F+534F+535F+536F+R137+340B+R123+178D+179D+180D+181D+182D +280D+279D+278D+277D+276D+312D+313DF+186F+187F+188F+1836F+1837F+1838F +1839F+1840F+1841F+1827F+1894F+1895F+1896F+1909F+1910F+1911F+R532+1802B +1788B+1789B+1790B+1791B+1792B+1793B+1794B+1795B+1796B.
2CD053	=1796B+1795B+1794B+1793B.
2CD055	=1808B+1809B+1793B+1794B+1795B+1796B.
2CD057	=/OMEGA.
2CD059	=1793B+1794B+1795B+1796B.
2CD085	=1796C+1795C+1794C+1793C+1792C+1806C+R536+R564+1963K+1962K+1944K+1943K +1942K+1917K+1916K+1915K+1914K+1879K+1878K+1877K+1876K+1875K+1874K+1849K +1845K+1844K+1843K+1842DK+218D+217D+216D+215D+214D+213D+235D.
2CD110	=2206E+2204E+R629+2204B+2203B+1756B+1757B+1798B+R522+1893F+1834F+1835F +1903M+1904M.
2CD112	=2206E+2204E+R629+2204B+2203B+1756B+1783B+1784B+1785B+1765C.

Table E.2 Cable to Cable Routing Point Equations (Continued)

Cable	Routing
2CD113	=2206E+2204E+R629+2204B+2203B+1756B+1757B+1798B+R522+1893F+1834F+1835F +1903M+1904M.
2CD115	=2206E+2204E+R629+2204B+2203B+1756B+1783B+1784B+1785B+1765C.
2CD116	=2206E+2204E+R629+2204B+2203B+1756B+1757B+1798B+R522+1893F+1834F+1835F +1903M+1904M+1905M.
2CD118	=2206E+2204E+R629+2204B+2203B+1756B+1783B+1784B+1785B+1765C.
2CD120	=1901F+1902F+2222M+1903M.
2CD122	=1902F+1835F+1834F+1893F+R522+1798B+1757B+1783B+1784B+1785B+1765C.
2CD123	=1902F+1903M.
2CD125	=1902F+1835F+1834F+1893F+R522+1798B+1757B+1783B+1784B+1785B+1765C.
2CD126	=1902F+1903M+1904M.
2CD128	=1902F+1835F+1834F+1893F+R522+1798B+1757B+1783B+1784B+1785B+1765C.
2CD133	=2206E+2204E+R629+2204B+2203B+1756B+1757B+1798B+R522+1893F+1834F+1835F +1903M+1904M.
2CD135	=2206E+2204E+R629+2204B+2203B+1756B+1783B+1784B+1785B+1765C.
2CD136	=2206E+2204E+R629+2204B+2203B+1756B+1757B+1798B+R522+1893F+1834F+1835F +1903M+1904M.
2CD138	=2206E+2204E+R629+2204B+2203B+1756B+1783B+1784B+1785B+1765C.
2CD140	=2206E+2204E+R629+2204B+2203B+1756B+1757B+1798B+R522+1893F+1834F+1835F +1903M+1904M+1905M.
2CD142	=2204E+R629+2204B+2203B+1756B+1783B+1784B+1785B+1765C.
2CD143	=1902F+1903M.
2CD145	=1902F+1835F+1834F+1893F+R522+1798B+1757B+1783B+1784B+1785B+1765C.
2CD146	=1902F+1903M.
2CD148	=1902F+1835F+1834F+1893F+R522+1798B+1757B+1783B+1784B+1785B+1765C.
2CD149	=1901F+1902F+2222M+1903M+1904M.
2CD151	=1902F+1835F+1834F+1893F+R522+1798B+1757B+1783B+1784B+1785B+1765C.
2CD158	=1749F+R515+1749B+1742B+1741B+1739B+R517+1782B+1781B+1790B+1804B+R535 +R561+1919F+R563+1918F+1917F+1916F+1912F+1915F+1914F+1895F+1894F+1827F +1828C+1853C+R555+R583+2007B+2006B+2005B+2021B+2014B+2013B+2012B+2011B +2010B+511B+556B+557BG+524G+523EG+543E+598E+597E+596E+595E+594E+593E.
2CD159	=1749F+R515+1749B+1743B+1744B.
2CW010	=68B+70B.
2CW011	=189B+168B+167B+166B+165B+164B+1979B+1980B+1981B+1986B+R578+62A+63A+68A +70A+71A+72A.
2CW012	=179D+178D+R123+340B+R137+536F+535F+534F+621F+533F+528F+527F+526F+525F +524F+547F+560F+598F+597F+596F+595F+594F+593F.
2CW013	=179D+178D+R123+340B+R137+536F+535F+534F+621F+533F+528F+527F+526F+525F +524F+547F+560F+598F+597F+596F+595F+594F+593F.
2CW014	=/OMEGA.
2CW015	=334A+333A+784A+325A+324A+323A+2111A+R613+2110AB+2075B+2074B+2107B+2060B +2059B+2058B+2057B+2056B+2104B+R581+1989B+1984B+1983B+1982B+1986B+R578 +62A+63A+68A+69A.

Table E.2 Cable to Cable Routing Point Equations (Continued)

Cable	Routing
2CW016	=334B+341B+R139+530E+529E+528E+527E+526E+525E+524E+547E+560E+598E+597E +596E+595E+594E+593E.
2CW017	=334B+341B+R139+530E+529E+528E+527E+526E+525E+524E+547E+560E+598E+597E +596E+595E+594E+593E.
2CW018	=67B+65B+74B.
2CW019	=189B+168B+167B+166B+165B+164B+1979B+1980B+1981B+1986B+R578+62A+63A+67A +66A.
2CW020	=179D+178D+R123+340B+R137+536F+535F+534F+621F+533F+528F+527F+526F+525F +524F+547F+560F+598F+597F+596F+595F+594F+593F.
2CW021	=179D+178D+R123+340B+R137+536F+535F+534F+621F+533F+528F+527F+526F+525F +524F+547F+560F+598F+597F+596F+595F+594F+593F.
2CW023	=68B+70B.
2CW024	=63B+61B+R579+1981D+1982D+1981D+1980D+1979D+164D+165D+166D+167D+168D +189D.
2CW026	=68B+63B+61B.
2CW027	=68B+63B+61B+R579+1987D+1983D+1984D+1989D+R624+2104C+2055C+2056C+2057C +2058C+2059C+2060C+2107C+2074C+2075C+2110BC+R612+2111B+323B+324B+325B +784B+333B+334B.
2CW029	=63B+61B.
2CW030	=63B+61B+R579+1987D+1982D+1981D+1980D+1979D+164D+165D+166D+167D+168D +189D.
2CW032	=1749F+R515+1749B+1743B+1750B+R519+1815B+1814B+1795B+1816B+1817B.
2CW033	=1749F+R515+1749B+1742B+1741B+1739B+R517+1782B+1781B+1780B+1779B+1778B +1777B+1776B+1775B+1773B+1767B+R526+R626+1890C+1888C+1826C+1827C+1828C +1853C+R555+2007B+2006B+2005B+2021B+2014B+2013B+2012B+2011B+2010B+511B +556B+557BG+524G+523EG+543E+598E+597E+596E+595E+594E+593E.
2CW035	=1808B+1809B+1793B+1794B+1795B+1816B+1817B.
2CW036	=1808B+1807B+1781B+1790B+1789B+1788B+1802B+R532+1912F+1911F+1910F+1909F +1897F+1899F+R558+R584+2170C+2165C+2166C+2171C+2020C+2019C+2021C+2014C +2013C+2012C+2011C+2010C+511C+556C+557CH+524H+523FH+543F+598F+597F+596F +595F+594F+593F.
2CW038	=1749F+R515+1749B+1742B+1741B+1739B+1738B+1737B+1731B+1730B+1729B+1709B +1708C+1713C+1714C+1715C+1727C+1728C.
2CW039	=1749F+R515+1749B+1742B+1741B+1739B+R517+1782B+1781B+1780B+1779B+1778B +1801B+1802B+R532+1912F+1911F+1910F+1909F+1897F+1899F+R558+R584+2170C +2165C+2166C+2171C+2020C+2019C+2021C+2014C+2013C+2012C+2011C+2010C+511C +556C+557CH+524H+523FH+543F+598F+597F+596F+595F+594F+593F.
2CW041	=1808B+1807B+1782B+R517+1738B+1737B+2192BC+2189C+2190C+2191BC+1708C+1713C +1714C+1715C+1727C+1728C.
2CW042	=1808B+1807B+1781B+1790B+1789B+1788B+1802B+R532+1912F+1911F+1910F+1909F +1897F+1899F+R558+R584+2170C+2165C+2166C+2171C+2020C+2019C+2021C+2014C +2013C+2012C+2011C+2010C+511C+556C+557CH+524H+523FH+543F+598F+597F+596F +595F+594F+593F.

Table E.2 Cable to Cable Routing Point Equations (Continued)

Cable	Routing
2CW053	=1816B+1817B.
2CW054	=179D+189D+168D+167D+166D+165D+164D+1979D+1980D+1981D+1982D+1983D+1984D +1989D+R624+2104D+2069D+2068D+2067D+2066D+2065D+2064D+2063D+2197D+2045D +2044D+R575+1938F+1937F+1936F+1935F+1934F+1933F+1932F+1931F+1930F+1929F +1928F+1927F+1926F+1925F+1924F+1923F+1922F+1920F+1919F+R561+R535+1804B +1790B+1791B+1792B+1793B+1797B+1795B.
2CW055	=1816B+1817B.
2CW056	=334B+335B+336B+343BF+344F+345F+351F+352E+369E+368E+367E+366E+R542+1861L +1862L+1863L+1864L+1865L+1866L+1867F+1828F+1827F+1894F+1895F+1914F+1915F +1916F+1917F+1918F+1919F+R561+R535+1804B+1790B+1791B+1792B+1793B+1794B +1795B.
2CW066	=68B.
2CW067	=63B+61B+R579+1987D+1982D+1981D+1980D+1979D+164D+165D+166D+167D+168D +189D.
2CW073	=68B.
2CW074	=/OMEGA.
2CW075	=68B+63B+61B+R579+1987D+1983D+1984D+1989D+R624+2104C+2055C+2056C+2057C +2058C+2059C+2060C+2107C+2074C+2075C+2110BC+R612+2111B+323B+324B+325B +784B+333B+334B.
2CW078	=63B+61B+R579+1987D+1982D+1981D+1980D+1979D+164D+165D+166D+167D+168D +189D.
2CW100	=189D+168D+167D+166D+165D+164D+1979D+1980D+1981D+1982D+1987D+R579+61B+63B +68B+70B+71B.
2CW101	=334B+333B+784B+325B+324B+323B+2111B+R612+2110BC+2075C+2074C+2107C+2060C +2059C+2058C+2057C+2056C+2055C+2104C+R624+1989D+1984D+1983D+1987D+R579 +61B+63B+68B+70B+71B.
2CW200	=189D+168D+167D+166D+165D+164D+1979D+1980D+1981D+1982D+1987D+R579+61B+63B +68B+70B.
2CW201	=189D+168D+167D+166D+165D+164D+1979D+1980D+1981D+1982D+1987D+R579+61B+63B +68B+70B.
2CW202	=70B+68B+61B+R579+1987D+1982D+1981D+1980D+1979D+164D+165D+166D+167D+168D +189D+179D+178D+R123+340B+R137+536F+535F+534F+621F+533F+528F+527F+526F +525F+524F+547F+560F+598F+597F+596F+595F+594F+593F.
2CW203	=68A+70A.
2CW204	=71B.
2CW205	=189D+168D+167D+166D+165D+164D+1979D+1980D+1981D+1982D+1987D+R579+61B+63B +68B+70B.
2CW206	=334B+333B+784B+325B+324B+323B+2111B+R612+2110BC+2075C+2074C+2107C+2060C +2059C+2058C+2057C+2056C+2055C+2104C+R624+1989D+1984D+1983D+1987D+R579 +61B+63B+68B+70B.
2CW210	=334B+333B+784B+325B+324B+323B+2111B+R612+2110BC+2075C+2074C+2107C+2060C +2059C+2058C+2057C+2056C+2055C+2104C+R624+1989D+1984D+1983D+1987D+R579 +61B+63B+68B.

Table E.2 Cable to Cable Routing Point Equations (Continued)

Cable	Routing
2CW211	=334B+333B+784B+325B+324B+323B+2111B+R612+2110BC+2075C+2074C+2107C+2060C +2059C+2058C+2057C+2056C+2055C+2104C+R624+1989D+1984D+1983D+1987D+R579 +61B+63B+68B.
2CW212	=68B+63B+61B+R579+1987D+1982D+1981D+1980D+1979D+164D+165D+166D+167D+168D +189D+179D+178D+R123+340B+R137+536F+535F+534F+621F+533F+528F+527F+526F +525F+524F+547F+560F+598F+597F+596F+595F+594F+593F.
2CW213	=/OMEGA.
2CW214	=/OMEGA.
2CW220	=189D+168D+167D+166D+165D+164D+1979D+1980D+1981D+1982D+1987D+R579+61B+63B +67B+65B+64B.
2CW221	=189D+168D+167D+166D+165D+164D+1979D+1980D+1981D+1982D+1987D+R579+61B+63B +67B+65B+64B.
2CW222	=593F+594F+595F+596F+597F+598F+560F+547F+524F+525F+526F+527F+528F+533F +621F+534F+535F+536F+R137+340B+R123+178D+179D+189D+168D+167D+166D+165D +164D+1979D+1980D+1981D+1982D+1987D+R579+61B+63B+67B+65B+64B.
2CW223	=67A+65A.
2CW224	=64B+65B+67B.
2CY010	=1742E+1749E+R514+1749A+1743A+1750A+R518+1815A+1814A+1794A+1793A+1792A +1791A+1780A.
2CY011	=1742F+1749F+R515+1749B+1742B+1741B+1739B+R517+1782B+1781B+1790B+1789B +1788B+1802B+R532+1912F+1911F+1910F+1909F+1897F+1899F+R558+R584+2170C +2165C+2166C+2171C+2020C+2019C+2021C+2014C+2013C+2012C+2011C+2010C+511C +556C+557CH+524H+523FH+543F+598F+597F+596F+595F+594F+593F.
2CY012	=1742F+1749F+R515+1749B+1743B+1750B+R519+1815B+1814B+1795B+1796B.
2CY013	=1809B+1793B+1794B+1795B+1796B.
2CY014	=1808A+1807A+1781A+1780A.
2CY015	=1808B+1807B+1781B+1790B+1789B+1788B+1802B+R532+1912F+1911F+1910F+1909F +1897F+1899F+R558+R584+2170C+2165C+2166C+2171C+2020C+2019C+2021C+2014C +2013C+2012C+2011C+2010C+511C+556C+557CH+524H+523FH+543F+598F+597F+596F +595F+594F+593F.
2DC010	=/OMEGA.
2DC011	=/OMEGA.
2DC014	=299A.
2DC017	=309A+802A+402A+282A+283A+284A+294A.
2DC027	=299A+295A+296A+297A+298A+1333A+1334A+1335A+1339A+1340A+1349A+1350A+1351A +1352A+1370AB+1364B+1365B+1366B+1367B+R409+1332A+1331A+1329A+1328A +1326A.
2DC028	=299A+295A+296A+297A+298A+1333A+1334A+1335A+1339A+1340A+1349A+1350A+1351A +1352A+1370AB+1364B+1365B+1366B+1367B+R409+1332A+1331A+1329A+1328A +1326A.
2DC030	=/OMEGA.
2DC031	=/OMEGA.
2DC032	=/OMEGA.
2DC033	=/OMEGA.

Table E.2 Cable to Cable Routing Point Equations (Continued)

Cable	Routing
2DC036	=792A+310A+276A.
2DC040	=309A+802A+402A+281A+279A+278A+277A+276A.
2DC041	=796A+494A+483A.
2DC044	=123A+127A+128A+130A+131A+132A+R106+144A+148A+149A+151A.
2DC045	=490A+489A+488A+487A+486A+485A+484A+483A.
2DC046	=151A+149A+148A+144A+R106+132A+131A+130A+128A+127A.
2DC074	=151A+149A+148A+144A+R106+132A+131A+130A+128A+127A+123A.
2DG010	=161B+159B+158B+157B+156B+R119+155B+154B+153B+493B+R177+492B+490B+489B.
2DG011	=161B+159B+158B+157B+156B+R119+155B+154B+153B+493B+R177+492B+490B+489B +488B+487B+486B+485B+484B+483B+R162+481B+480B+479B+419B+420B+445B+444B +443B.
2DG012	=478E+788AE+491A+492A+R176+493A+153A+154A+155A+R118+R112+139A+141A.
2DG013	=478F+477F+476F+475F+797F+473F+482F+480F+458F+459F+457F+446B+444B+443B +425B+R178+605D+592D+591D.
2DG014	=478F+788BF+491B+492B+R177+493B+153B+154B+155B+R119+156B+157B+158B+160B.
2DG015	=160B+158B+162B.
2DG021	=490B+492B+R177+493B+153B+154B+155B+R119+156B+157B+158B+160B.
2DG023	=491B+492B+R177+493B+153B+154B+155B+R119+156B+157B+158B+160B.
2DG024	=488B+487B+486B+485B+484B+483B+R162+481B+480B+479B+437B+436B+435B+434B +424B+425B+443B.
2DG028	=795AB+283A+282A+281A+279A+278A+277A.
2DG029	=161B+159B+158B+157B+156B+R119+155B+154B+153B+493B+R177+492B+491B+788BF +478F+477F+476F+475F+797F+473F+482F+480F+458F+459F+457F+456F+455F+454F +R173+453F+1026B+1037B+1038B+1039B+1040B+1041B+1042B+1043B+1044B+1047B +1045B+1046B+R304+1016B+1017B+1018B+1022B.
2DG031	=304D+303D+794D+306D+307AD+R131+625D+R190+R189+689C+688C+687C+685C+684C +679C.
2DG032	=303D+794D+793CD+283C+282C+281C+279C+278C+277C+276C+275AC+274A+R127+273A +271A+270A+258A+257A+256A+255A+254A+253A+252A.
2DG038	=492A+R176+493A+153A+154A+155A+R118+156A+157A+162A+163A.
2DG039	=492B+R177+493B+153B+154B+155B+R119+156B+157B+158B+159B+161B.
2DG047	=490B+492B+R177+493B+153B+154B+155B+R119+156B+157B+158B+160B.
2DG048	=/OMEGA.
2DG049	=/OMEGA.
2DG052	=264A+263A+256A+255A+254A+253A+252A.
2DG053	=283C+282C+281C+279C+278C+277C+276C+275AC+274A+R127+273A+271A+270A+258A +257A+256A+255A+254A+253A+252A.
2DG054	=492A+R176+493A+153A+154A+155A+R118+156A+157A+162A+163A.
2DG055	=490B+492B+R177+493B+153B+154B+155B+R119+156B+157B+158B+159B+161B.
2DG063	=157B+158B+159B+161B.
2DG064	=157B+158B+159B+161B.
2DG065	=157B+158B+159B+161B.
2DG066	=157B+158B+159B+161B.

Table E.2 Cable to Cable Routing Point Equations (Continued)

Cable	Routing
2DG069	=283C+282C+281C+279C+278C+277C+276C+275AC+274A+R127+273A+271A+267A+266A +265A.
2DG070	=793CD+306D+307AD+244A+268A+251A+250A+249A+248A+247A+246A.
2DG075	=283C+282C+281C+279C+278C+277C+276C+275AC+274A+R127+273A+271A+267A+266A +265A+264A+263A+256A+255A+254A+253A+252A.
2DG078	=494B+484B+486B+487B+488B+489B+490B+492B+R177+493B+153B+154B+155B+R119 +156B+157B+158B+160B.
2DG082	=161B+159B+158B+157B+156B+R119+155B+154B+153B+493B+R177+492B+490B+489B +488B+487B+486B+485B+484B+483B+R162+481B+480B+479B+419B+420B+R179+606C +588C+587C+586C+585C+584C+583C+569C+590C.
2DG083	=161B+159B+158B+157B+156B+R119+155B+154B+153B+493B+R177+492B+490B+489B +488B+487B+486B+485B+484B+483B+R162+481B+480B+479B+419B+420B+R179+606C +588C+587C+586C+585C+584C+583C+569C+590C.
2DG086	=310C+276C+275AC+274A+R127+273A+271A+267A+266A+265A+264A+263A+256A+255A +254A+253A+252A.
2DG088	=/OMEGA.
2DG090	=252A+253A+254A+255A+256A+263A+264A+265A+266A+267A+271A+273A+R128+619D +R185+695C+658C+681C+672C+673C+674C+675C+676C+677C+678C+679C.
2DG091	=252A+253A+254A+255A+256A+263A+264A+265A+266A+267A+271A+273A+R128+619D +R185+695C+658C+681C+672C+673C+674C+675C+676C+677C+678C+679C.
2DG100	=119D+118D+R103+118B+114B+115B+116B+117B+1721BE+1720E+1719E+1718E+1717E +1726E+R530+1751D+R547+1884N+1883N+1851N+1850N+1873N+1862N+1861N+1860N +1859BN+222B+221B+199B+198B+R126+194BG+R133+186D+185D+184D+183D+182D +181D+180D+189D+168D+167D+166D+314D+R111+134D+136D+135D.
2DG101	=119D+118D+R103+118B+114B+115B+116B+117B+1721BE+1720E+1719E+1718E+1717E +1726E+R530+1751D+R547+1884N+1883N+1851N+1850N+1873N+1862N+1861N+1860N +1859BN+222B+221B+199B+198B+R126+194BG+R133+186D+185D+184D+183D+182D +181D+180D+189D+168D+167D+166D+314D+R111+134D+136D+135D.
2DG102	=/OMEGA.
2DG103	=119D+118D+R103+118B+114B+115B+116B+117B+1721BE+1720E+1719E+1718E+1717E +1726E+R530+1751D+R547+1884N+1883N+1851N+1850N+1873N+1862N+1861N+1860N +1859BN+222B+221B+199B+198B+R126+194BG+R133+186D+185D+184D+183D+182D +181D+180D+189D+168D+167D+166D+314D+R111+134D+136D+135D.
2DG105	=119D+118D+R103+118B+114B+115B+116B+117B+1721BE+1720E+1719E+1718E+1717E +1726E+R530+1751D+R547+1884N+1883N+1851N+1850N+1873N+1862N+1861N+1860N +1859BN+222B+221B+199B+198B+R126+194BG+R133+186D+185D+184D+183D+182D +181D+180D+189D+168D+167D+166D+314D+R111+134D+136D+135D.
2DG106	=119D+118D+R103+118B+114B+115B+116B+117B+1721BE+1720E+1719E+1718E+1717E +1726E+R530+1751D+R547+1884N+1883N+1851N+1850N+1873N+1862N+1861N+1860N +1859BN+222B+221B+199B+198B+R126+194BG+R133+186D+185D+184D+183D+182D +181D+180D+189D+168D+167D+166D+314D+R111+134D+136D+135D.
2DG107	=119C+118C+R102+118A+114A+115A+116A+117A+1721A+1720A+1719A+1718A+1717A +1716A+1726A+R528+1751A+R549+1885A+1823A+1822A+1821A+1820A+1819A+1818A +177A+176A+175A+174A+173A+172A+171A+170A+190AB+180B+189B+168B+167B+166B +314B+R110+134B+135B.

Table E.2 Cable to Cable Routing Point Equations (Continued)

Cable	Routing
2DG119	=283C+282C+281C+279C+278C+277C+276C+275AC+274A+R127+273A+271A+267A+266A +265A+264A+263A+256A+255A+254A+253A+252A.
2DG120	=283C+282C+281C+279C+278C+277C+276C+275AC+274A+R127+273A+271A+270A+258A +257A+256A+255A+254A+253A+252A.
2DG121	=283C+282C+281C+279C+278C+277C+276C+275AC+274A+R127+R128+619D+R186+R185 +695C+658C+681C+672C+673C+674C+675C+676C+677C+678C+679C.
2DG123	=487B+488B+489B+490B+492B+R177+493B+153B+154B+155B+R119+156B+157B+158B +159B+161B.
2DG124	=486B+485B+484B+483B+R162+481B+480B+458B+479B+419B+420B+445B+444B+443B +426B+R166+571D+570D+569D+590D.
2DG127	=487B+488B+489B+490B+492B+R177+493B+153B+154B+155B+R119+156B+157B+158B +159B+161B.
2DG141	=161B+159B+158B+162B.
2DG142	=161B+159B+158B+162B.
2DG143	=160B+159B+161B.
2DG144	=160B+159B+161B.
2DG145	=/OMEGA.
2DG146	=/OMEGA.
2DG147	=160B+159B+161B.
2DG148	=160B+159B+161B.
2DG149	=157B+158B+159B+161B.
2DG150	=157B+158B+159B+161B.
2DG151	=157B+158B+159B+161B.
2DG152	=/OMEGA.
2DG153	=/OMEGA.
2DG154	=/OMEGA.
2DG155	=/OMEGA.
2DG156	=/OMEGA.
2DG157	=/OMEGA.
2DG158	=161B+159B+158B+157B.
2DG161	=1408F+1411F+R435+1411B+1409B+1410B+R413+R410+1332B+1331B+1329B+1325B +1324B.
2DG162	=1407F+1401F+R433+1401B+1400B+1403B+1402B+1395B+1375B+1374B+1373B+1372B +620C+621C+622C+623C+624C+R189+689C+688C+687C+685C+684C+678C+677C+676C +675C+674C+673C+672C+804C.
2DG164	=161B+159B+158B+162B.
2DG210	=487B+488B+489B+490B+492B+R177+493B+153B+154B+155B+R119+156B+157B+158B +159B+161B.
2DG211	=443B+444B+445B+420B+419B+479B+480B+481B+R162+483B+484B+485B+486B+487B +488B+489B+490B+492B+R177+493B+153B+154B+155B+R119+156B+157B+158B+159B +161B.
2DG212	=283C+282C+281C+279C+278C+277C+276C+275AC+274A+R127+273A+271A+267A+266A +265A+264A+263A+256A+255A+254A+253A+252A.

Table E.2 Cable to Cable Routing Point Equations (Continued)

Cable	Routing
2DG213	264A+263A+256A+255A+254A+253A+252A.
2EH011	2106F+2105F+R610+2105B+2057B+2058B+2059B+2060B+2107B+2074B+2075B+2110AB +R613+2111A+323A+324A+325A+784A+326A+327A+328A+497A.
2EH097	386D+385D+384D+383D+382D+381D+380D+372D+371D+R160+350C+349C+348C+347C +346C+498CH+499H+500H+501H.
2EH099	391C+392C+393C+403C+390C+410C+414C+374CD+R158+348C+347C+346C.
2EH100	1892D+1886D+R550+1886B+1824B+1823B+1822B.
2EH101	1891E+1889E+R552+1889C+1825C+1824C+1823C+1822C.
2EH102	1891E+1889E+R552+1889C+1826C+1827C+1828C+1852CG+1851G+1850G+1849G+1848G +1871G+R543+366C+365C+349C+R159+540F+601F+600F+592F.
2EH103	1891E+1889E+R552+1889C+1826C+1827C+1828C+1852CG+1851G+1850G+1849G+1848G +1871G+R543+366C+365C+349C+R159+540F+601F+600F+592F.
2EH105	2143A+2140A+2139A+R557+1899B+1897B+1896B+1895B+1894B+1826B+1825B+1824B +1823B+1822B.
2EH106	2147B+R592+2147E+2140B+2138B+2131B+2130B+R558+1899F+1897F+1896F+1895F +1894F+1827F+1841F+1840F.
2EH107	2144E+2147E+R592+2147B+2140B+2138B+2131B+2130B+R558+1899F+1897F+1896F +1895F+1894F+1827F+1828F+1867F+1866L+1865L+1864L+1863L+1862L+1861L+R542 +366E+367E+368E+369E+352E+R150+549E+548E+547E+573E+574E+575E+576E+604E +596E+595E+594E+593E+592E.
2EH108	2144E+2147E+R592+2147B+2140B+2138B+2131B+2130B+R558+1899F+1897F+1896F +1895F+1894F+1827F+1828F+1867F+1866L+1865L+1864L+1863L+1862L+1861L+R542 +366E+367E+368E+369E+352E+R150+549E+548E+547E+573E+574E+575E+576E+604E +596E+595E+594E+593E+592E.
2EH135	1845K+1844K+1843K+1842DK+218D+217D+216D+215D+214D+213D+212D+211D+210D +209D+208D.
2EH136	1845K+1844K+1843K+1842DK+218D+217D+216D+215D+214D+213D+212D+211D+210D +209D+208D.
2EH137	1845K+1844K+1843K+1842DK+218D+217D+216D+215D+214D+213D+212D+211D+210D +209D+208D.
2EH138	1845K+1844K+1843K+1842DK+218D+217D+216D+215D+214D+213D+212D+211D+210D +209D+208D.
2FW010	485G+496AG+336A+335A+334A+333A+784A+325A+855A+R239.
2FW011	484H+483H+499H+498CH+346C+347C+R156+R157+544F+543F+598F+597F+596F+595F +594F+593F.
2FW012	484H+483H+499H+498CH+346C+347C+R156+R157+544F+543F+598F+597F+596F+595F +594F+593F.
2FW013	484H+485H+495H+496BH+236B+335B+334B+333B+784B+325B+324B+323B+2111B+R612 +2110BC+2076C+2077C+2078C.
2FW014	484H+483H+499H+498CH+346C+R154+378D+379D+414D+413D+412D+411D+410D+390D +389D.
2FW016	173C+172C+171C+191CD+R124+192D+R125+342B+344B+345B+497B+328B+327B+326B +784B+325B+324B+323B+2111B+R612+2110BC+2075C+2074C+2107C+2061BC+504B +505B.

Table E.2 Cable to Cable Routing Point Equations (Continued)

Cable	Routing
2FW017	=173C+172C+171C+191CD+R124+192D+R125+342B+344B+345B+346B+R155+548F+547F +573F+574F+575F+604F+596F+595F+594F+593F.
2FW021	=172C+171C+191CD+R124+192D+R125+342B+344B+345B+497B+328B+327B+326B+784B +325B+324B+323B+2111B+R612+2110BC+2075C+2074C+2107C+2061BC+504B+505B.
2FW022	=172C+171C+191CD+R124+192D+R125+342B+344B+345B+346B+R155+548F+547F+573F +574F+575F+604F+596F+595F+594F+593F.
2FW027	=172C+173C+174C+175C+176C+177C.
2FW028	=173C+172C+171C+191CD+R124+192D+R125+342B+344B+345B+346B+R155+548F+547F +573F+574F+575F+604F+596F+595F+594F+593F.
2FW032	=172C+173C+174C+175C+176C+177C.
2FW034	=173C+172C+171C+191CD+R124+192D+R125+342B+344B+345B+346B+R155+548F+547F +573F+574F+575F+604F+596F+595F+594F+593F.
2FW035	=173C+172C+171C+170C+169C+168C+167C+166C+165C+164C.
2FW036	=172C+171C+191CD+R124+192D+R125+342B+344B+345B+346B+R155+548F+547F+573F +574F+575F+604F+596F+595F+594F+593F.
2FW039	=173C+174C+175C+176C+177C+1818C+1819C+1820C+1821C+1822C+1823C+1824C+1825C +1826F+1894F+1895F+1896F+1909F+1910F+1911F+1912F+R532+1802B+1801B+1777B +1776B+1775B+1773B+1772B+1771B+1751B+R529+1726C+2202CE+1717E+1718E+1719E +1720E+1722E.
2FW040	=173C+172C+171C+170C+169C+168C+167C+166C+165C+164C.
2FW042	=172C+171C+191CD+R124+192D+R125+342B+344B+345B+346B+R155+548F+547F+573F +574F+575F+604F+596F+595F+594F+593F.
2FW046	=2059C+2060C+2107C+2074C+2209C+2208C.
2FW047	=2059C+2060C+2107C+2074C+2075C+2076C+2077C+2078C+2079C+2080C+2081C+2082C +2083C+2012C+2011C+2010C+511C+556C+557CH+524H+523FH+543F+598F+597F+596F +595F+594F+593F.
2FW048	=2072B+2108B.
2FW110	=506D+507D+508D+509D+510D+511D+2010D+2011D+2023D+2012D+2083D+2082D+2081D +2080D.
2FW111	=506D+507D+508D+509D+510D+511D+2010D+2011D+2023D+2012D+2083D+2082D+2081D +2080D.
2FW113	=311D+276D+277D+278D+279D+280D+182D+191CD+R124+192D+R125+342B+344B+345B +497B+328B+327B+326B+784B+325B+324B+323B+2111B+R612+2110BC+2075C+2074C +2107C+2061BC+504B+505B.
2FW114	=593E+594E+595E+596E+597E+598E+543E+523EG+524G+557BG+556B+510B+509B+508B +507B+506B.
2FW115	=593E+594E+595E+596E+597E+598E+543E+523EG+524G+557BG+556B+510B+509B+508B +507B+506B.
2FW117	=593E+594E+595E+596E+597E+598E+543E+523EG+524G+557BG+556B+510B+509B+508B +507B+506B.
2FW118	=593E+594E+595E+596E+597E+598E+543E+523EG+524G+557BG+556B+510B+509B+508B +507B+506B.
2FW121	=593E+594E+595E+596E+597E+598E+543E+523EG+524G+557BG+556B+510B+509B+508B +507B+506B.

Table E.2 Cable to Cable Routing Point Equations (Continued)

Cable	Routing
2FW122	=593E+594E+595E+596E+597E+598E+543E+523EG+524G+557BG+556B+510B+509B+508B +507B+506B.
2FW123	=593E+594E+595E+596E+597E+598E+543E+523EG+524G+557BG+556B+510B+509B+508B +507B+506B.
2FW126	=506D+507D+508D+509D+510D+556D+558D+R200+559D+541D+R199+540B+562B+563B +564B+565B+519B+520B+537B+538B+539B+R149+363G+359G+358G+357G+356G+355DG +328D+327D+326D+784D+325D+324D+323D+2111D+R614.
2FW127	=506D+507D+508D+509D+510D+556D+558D+R200+559D+541D+R199+540B+562B+563B +564B+565B+519B+520B+537B+538B+539B+R149+363G+359G+358G+357G+356G+355DG +328D+327D+326D+784D+325D+324D+323D+2111D+R614.
2FW129	=501H+500H+499H+498CH+497C+328C+327C+326C+784C+325C+324C+323C+2111C+R615 +2110CD+2075D+2074D+2107D+2061CD+504C+505C.
2FW130	=593E+594E+595E+596E+597E+598E+543E+523EG+524G+557BG+556B+510B+509B+508B +507B+506B.
2FW131	=593E+594E+595E+596E+597E+598E+543E+523EG+524G+557BG+556B+510B+509B+508B +507B+506B.
2FW133	=593E+594E+595E+596E+597E+598E+543E+523EG+524G+557BG+556B+510B+509B+508B +507B+506B.
2FW134	=593E+594E+595E+596E+597E+598E+543E+523EG+524G+557BG+556B+510B+509B+508B +507B+506B.
2FW137	=506B+507B+508B+509B+510B+556B+557BG+524G+523EG+543E+598E+597E+596E+595E +594E+593E.
2FW138	=543E+598E+597E+596E+595E+594E+593E.
2FW139	=506B+507B+508B+509B+510B+556B+557BG+524G+523EG+543E+598E+597E+596E+595E +594E+593E.
2FW163	=509D+510D+556D+558D+R200+559D+541D+R199+541B+542B+R148+362H+358H+357H +369H+379GH+414G+413G+411G+410G+390G+389G+398G.
2FW164	=509D+510D+556D+558D+R200+559D+541D+R199+541B+542B+R148+362H+358H+357H +369H+379GH+414G+413G+411G+410G+390G+389G+398G.
2FW182	=389D+390D+410D+411D+412D+413D+414D+379D+378D+R154+377D+R150+351F+345F +344F+343BF+337B+338B+339B+R141+512B+508B+507B+506B.
2FW183	=389D+390D+410D+411D+412D+413D+414D+379D+378D+R154+377D+R150+351F+345F +344F+343BF+337B+338B+339B+R141+512B+508B+507B+506B.
2FW184	=389D+390D+410D+411D+412D+413D+414D+379D+378D+R154+377D+R150+351F+345F +344F+343BF+337B+338B+339B+R141+512B+508B+507B+506B.
2FW185	=389D+390D+410D+411D+412D+413D+414D+379D+378D+R154+377D+R150+351F+345F +344F+343BF+337B+338B+339B+R141+512B+508B+507B+506B.
2FW186	=389D+390D+410D+411D+412D+413D+414D+379D+378D+R154+377D+R150+351F+345F +344F+343BF+337B+338B+339B+R141+512B+508B+507B+506B.
2FW187	=389D+390D+410D+411D+412D+413D+414D+379D+378D+R154+377D+R150+351F+345F +344F+343BF+337B+338B+339B+R141+512B+508B+507B+506B.
2FW188	=594F+595F+596F+597F+598F+543F+523FH+524H+557CH+556C+511C+2010C+2011C +2012C+2083C+2082C+2081C+2080C+2079C+2078C+2077C+2076C+2075C+2209C +2208C.

Table E.2 Cable to Cable Routing Point Equations (Continued)

Cable	Routing
2FW190	=594B+595B+596B+603B+601B+540B+R199+541D+559D+R200+558D+556D+510D+509D +508D+507D+506D.
2FW191	=594B+595B+596B+603B+601B+540B+R199+541D+559D+R200+558D+556D+511D+2010D +2011D+2023D+2012D+2083D+2082D+2081D+2080D.
2FW192	=594B+595B+596B+603B+601B+540B+R199+541D+559D+R200+558D+556D+510D+509D +508D+507D+506D.
2FW193	=594B+595B+596B+603B+601B+540B+R199+541D+559D+R200+558D+556D+510D+509D +508D+507D+506D+505D+504D+2061DE+2107E+2074E+2075E+2110DE.
2FW194	=594B+595B+596B+597B+598B+561B+540B+R199+541D+559D+R200+558D+556D+510D +509D+508D+507D+506D+505D+504D+2061DE+2107E.
2FW195	=594C+593C+587C+588C+606C+R179+420B+441B.
2FW196	=434B+424B+438B+439B+440B.
2FW197	=434B+424B+438B+439B+440B.
2FW198	=796B+494B+483B+R162+481B+480B+479B+419B+441B.
2FW202	=389D+390D+410D+411D+412D+413D+414D+379D+376D+R157+544F+543F+598F+597F +596F+595F.
2FW203	=389D+390D+410D+411D+412D+413D+414D+379D+376D+R157+544F+543F+598F+597F +596F+595F.
2FW204	=674C+673C+691C+692C+R191+627F+626DF+617D+616D+615D+614D+1391C+1392C +1393C+1394C+R428+1426B+1420B+1421B+1422B.
2FW205	=595C+594C+593C+599C+586C+585C+584C+583C+570C+571C+R195+572C+1068D+106 +1181D+1070D+1071D+1072D+1073D+1074D+1075D+1076D+1077D+R339+1120B+111
2FW206	=434B+424B+438B+439B+440B.
2FW207	=389D+390D+410D+411D+412D+413D+414D+379D+376D+R157+544F+543F+598F+597I +596F+595F.
2FW210	=171C+191CD+R124+192D+R125+342B+344B+345B+346B+347B+R157+544F+543F+59 +597F+596F+595F+594F+593F.
2FW215	=173C+172C+171C+170C+169C+168C+167C+166C+165C+164C.
2FW217	=171C+191CD+R124+192D+R125+342B+344B+345B+346B+347B+R157+544F+543F+59 +597F+596F+595F+594F+593F.
2FW218	=172C+173C+174C+175C+176C+177C.
2FW220	=172C+171C+191CD+R124+192D+R125+342B+344B+345B+346B+R155+548F+547F+57 +574F+575F+604F+596F+595F+594F+593F.
2FW221	=2144D+2143D+2142D+2141D+2146D+R587+R589+2179A+2158A+2159A+2164A+2165 +2166A+2171A+2020A+2019A+2005A+2004A+2003A+2002A.
2FW222	=2144E+2143E+2142E+2141E+2146E+R590+2179B+2158B+2159B+2164B+2165B+21 +2171B+2020B+2019B+2021B+2014B+2013B+2012B+2011B+2010B+511B+556B+55 +524G+523EG+543E+598E+597E+596E+595E+594E+593E.
2FW223	=2144E+2143E+2142E+2141E+2146E+R588+R590+2179B+2158B+2159B+2164B+216 +2166B+2171B+2020B+2019B+2005B+2004B+2003B+2002B.
2FW225	=2105F+R610+2105B+2056B+2071B+2072B+2073B+2074B+2075B+2110AB+R613+21 +323A+324A.

Table E.2 Cable to Cable Routing Point Equations (Continued)

Cable	Routing
2FW226	=2106G+2105G+R611+2105D+2057D+2058D+2059D+2060D+2061CD+504C+505C+506C +507C+508C+509C+510C+556C+557CH+524H+523FH+543F+598F+597F+596F+595F+594F +593F.
2FW227	=2106G+2105G+R611+2105D+2057D+2058D+2059D+2060D+2061CD+504C+505C+506C +507C+508C+509C+510C+556C+557CH+524H+523FH+544F+R157+R156+347C+346C +498CH+499H+483H+484H+485H+495H+496BH+336B+335B+334B+333B+784B+325B.
2FW230	=2078C+2077C+2076C+2110BC+R612+2111B+323B+324B.
2FW234	=484H+485H+495H+496BH+337B+338B+339B+R141+512B+509B+510B+556B+557BG+524G +523EG+543E+598E+597E+596E+595E+594E.
2FW240	=506B+507B+508B+509B+510B+511B+2010B+2011B+2012B+2083C+2082C+2081C+2080C +2079C.
2FW241	=/OMEGA.
2FW242	=/OMEGA.
2FW245	=/OMEGA.
2FW246	=/OMEGA.
2FW250	=2077C+2078C+2079C+2080C+2081C+2082C+2083C+2012C+1997C+1996C+513C+514C +515C+516C+R143+331C+330C+329C+497C+346C+347C+R156+376D+379D+414D+413D +412D+411D+410D+390D+398D.
2FW251	=2077C+2078C+2079C+2080C+2081C+2082C+2083C+2012B+2011B+2010B+511B+510B +509B+508B+507B+506B.
2FW252	=2077C+2078C+2079C+2080C+2081C+2082C+2083C+2012B+2011B+2010B+511B+510B +509B+508B+507B+506B.
2FW255	=2110CD+2075D+2074D+2107D+2061CD+504C+505C.
2FW256	=2110CD+2075D+2074D+2107D+2061CD+504C+505C.
2FW257	=2077C+2078C+2079C+2080C+2081C+2082C+2083C+2012C+1997C+1996C+513C+514C +515C+516C+R143+331C+330C+329C+497C+346C+347C+R156+376D+379D+414D+413D +412D+411D+410D+390D+389D+398D.
2FW281	=/OMEGA.
2FW330	=509B+510B+556B+557BG+524G+523EG+543E+598E+597E+596E+595E+594E.
2FW331	=/OMEGA.
2FW332	=/OMEGA.
2FW333	=508B+507B+506B.
2FW334	=508B+507B+506B.
2FW335	=508B+507B+506B.
2FW337	=508B+507B+506B.
2FW338	=/OMEGA.
2FW339	=/OMEGA.
2FW340	=509C+510C+556C+557CH+524H+523FH+543F+598F+597F+596F+595F+594F.
2FW341	=/OMEGA.
2FW342	=/OMEGA.
2FW343	=508C+507C+506C.
2FW344	=508C+507C+506C.
2FW345	=508C+507C+506C.

Table E.2 Cable to Cable Routing Point Equations (Continued)

Cable	Routing
2FW347	=508C+507C+506C.
2FW348	=/OMEGA.
2FW349	=/OMEGA.
2FW350	=509B+510B+556B+557BG+524G+523EG+543E+598E+597E+596E+595E+594E.
2FW353	=508B+507B+506B.
2FW354	=509C+510C+556C+557CH+524H+523FH+543F+598F+597F+596F+595F+594F.
2FW358	=508C+507C+506C.
2FW360	=/OMEGA.
2FW361	=/OMEGA.
2FW363	=/OMEGA.
2HP010	=124A+123A+126A+125A+120A+1003A+1002A.
2HP012	=/OMEGA.
2HP013	=124B+123B+126B+129B+815E+816E+817E+818E+819E.
2HP014	=821B+124B+123B+127B+128B+130B+131B+132B+R107+144B+148B+149B+151B+152B.
2HP015	=120A+125A+126A+127A+128A+130A+131A+133A.
2HP016	=120B+125B+129B+815E+816E+817E+818E+819E.
2HP017	=120B+125B+126B+127B+128B+130B+131B+132B+R107+144B+148B+150B.
2HP019	=120B+1003B+1002B+1001B+1000B.
2HP020	=121B+122B.
2HP021	=120A+1003A+1002A+1001A+1000A.
2HP022	=120B+1003B+1002B+1001B+1000B.
2HP023	=122B.
2HP025	=121B+120B+1003B+1002B+1001B+1000B.
2HP026	=121B+122B.
2HP029	=121B+122B.
2HP030	=120B+1003B+1002B+1001B+1000B.
2HP035	=120A+1003A+1002A+1001A+1000A.
2HP036	=120B+1003B+1002B+1001B+1000B.
2HP037	=121B+122B.
2HP039	=120B+1003B+1002B+1001B+1000B.
2HP040	=121B+122B.
2HP043	=/OMEGA.
2HP047	=122B+121B+125B+129B+815E+816E+817E+818E+819E.
2HP048	=122B+121B+125B+129B+815E+816E+817E+818E+819E.
2HP049	=122B+121B+125B+129B+815E+816E+817E+818E+819E.
2HP050	=122B+121B+125B+129B+815E+816E+817E+818E+819E.
2HP052	=122B+121B+125B+129B+815E+816E+817E+818E+819E.
2HP053	=122B+121B+125B+129B+815E+816E+817E+818E+819E.
2HP067	=120B+125B+129B+815E+816E+817E+818E+819E.
2HP070	=118C+R102+118A+114A+115A+116A+117A+1721A+1720A+1719A+1718A+1717A+1716A +1726A+R528+1751A+R549+1885A+1823A+1822A+1821A+1820A+1819A+1818A+177A +176A+175A+174A+173A+172A+171A+170A+190AB+180B+189B+168B+167B+166B+314B +R110+134B+136B.

Table E.2 Cable to Cable Routing Point Equations (Continued)

Cable	Routing
2HP071	=118D+R103+118B+114B+115B+116B+117B+1721BE+1720E+1719E+1718E+1717E+1726E +R530+1751D+R547+1884N+1883N+1851N+1850N+1873N+1862N+1861N+1860N+1859BN +222B+221B+199B+198B+R126+194BG+R133+186D+185D+184D+183D+182D+181D+180D +189D+168D+167D+166D+314D+R111+134D+136D.
2HP072	=118D+R103+118B+114B+115B+116B+117B+1721BE+1720E+1719E+1718E+1717E+1726E +R530+1751D+R547+1884N+1883N+1851N+1850N+1873N+1862N+1861N+1860N+1859BN +222B+221B+199B+198B+R126+194BG+R133+186D+185D+184D+183D+182D+181D+180D +189D+168D+167D+166D+314D+R111+134D+136D.
2HP073	=118D+R103+118B+114B+115B+116B+117B+1721BE+1720E+1719E+1718E+1717E+1726E +R530+1751D+R547+1884N+1883N+1851N+1850N+1873N+1862N+1861N+1860N+1859BN +222B+221B+199B+198B+R126+194BG+R133+186D+185D+184D+183D+182D+181D+180D +189D+168D+167D+166D+314D+R111+134D+136D.
2HP074	=118D+R103+118B+114B+115B+116B+117B+1721BE+1720E+1719E+1718E+1717E+1726E +R530+1751D+R547+1884N+1883N+1851N+1850N+1873N+1862N+1861N+1860N+1859BN +222B+221B+199B+198B+R126+194BG+R133+186D+185D+184D+183D+182D+181D+180D +189D+168D+167D+166D+314D+R111+134D+136D.
2HP075	=/OMEGA.
2HP076	=119D+118D+R103+118B+114B+115B+116B+117B+1721BE+1720E+1719E+1718E+1717E +1726E+R530+1751D+R547+1884N+1883N+1851N+1850N+1873N+1862N+1861N+1860N +1859BN+222B+221B+199B+198B+R126+194BG+R133+186D+185D+184D+183D+182D +181D+180D+189D+168D+167D+166D+314D+R111+134D+136D.
2HP078	=123B+126B+129B+815E+816E+817E+818E+819E.
2HP081	=122B+121B+125B+126B+127B+128B+130B+131B+132B+R107+144B+148B+149B+151B.
2HP082	=122B+121B+125B+126B+127B+128B+130B+131B+132B+R107+144B+148B+149B+151B.
2HP086	=122B+121B+125B+126B+127B+128B+130B+131B+132B+R107+144B+148B+149B+151B.
2HP089	=122B+121B+125B+129B+815E+816E+817E+818E+819E.
2HP092	=122B+121B+125B+129B+815E+816E+817E+818E+819E.
2HP093	=122B+121B+120B+1003B+1002B+1001B+1000B.
2HP094	=122B+121B+120B+1003B+1002B+1001B+1000B.
2HP095	=122B+121B+120B+1003B+1002B+1001B+1000B.
2HP096	=122B+121B+120B+1003B+1002B+1001B+1000B.
2HP097	=122B+121B+120B+1003B+1002B+1001B+1000B.
2HP098	=122B+121B+120B+1003B+1002B+1001B+1000B.
2HP099	=122B+121B+120B+1003B+1002B+1001B+1000B.
2HP100	=122B+121B+120B+1003B+1002B+1001B+1000B.
2HP101	=122B+121B+120B+1003B+1002B+1001B+1000B.
2HP102	=122B+121B+120B+1003B+1002B+1001B+1000B.
2HP117	=819E+818E+817E+816E+815E+129B+125B+121B+122B.
2HP134	=120A+121A.
2HP139	=122B+121B.
2HP141	=821B+124B+123B+126B+125B+121B+122B.
2HP156	=819E+818E+817E+816E+815E+129B+126B+123B+124B+821B.
2HP157	=151B+149B+148B+144B+R107+132B+131B+130B+128B+127B+123B+124B+821B.

Table E.2 Cable to Cable Routing Point Equations (Continued)

Cable	Routing
2HP158	=225B+211B+212B+213B+214B+215B+216B+198B+R126+194BG+R133+186D+185D+184D +183D.
2HP161	=821B+124B+123B+126B+129B+815E+816E+817E+818E+819E.
2HP163	=821B+124B+123B+127B+128B+130B+131B+132B+R107+144B+148B+149B+151B.
2HP167	=124B+123B+127B+128B+130B+131B+132B+R107+144B+148B+149B+151B+152B.
2HP168	=124B+123B+127B+128B+130B+131B+132B+R107+144B+148B+149B+151B+152B.
2HP169	=124B+123B+127B+128B+130B+131B+132B+R107+144B+148B+149B+151B+152B.
2HP170	=124B+123B+127B+128B+130B+131B+132B+R107+144B+148B+149B+151B.
2HP171	=124B+123B+126B+129B+815E+816E+817E+818E+819E.
2HP172	=821B+124B+123B+127B+128B+130B+131B+132B+R107+144B+148B+149B+151B+152B.
2HP173	=821B+124B+123B+127B+128B+130B+131B+132B+R107+144B+148B+149B+151B.
2HP181	=151B.
2HP182	=151B.
2HP183	=151B.
2HP184	=151B+149B+150B.
2HP185	=150B.
2HP186	=150B.
2HP187	=/OMEGA.
2HP188	=151B+149B+150B.
2HP189	=152B.
2HP190	=152B.
2HP191	=150B+149B+151B+152B.
2HP192	=151B+149B+148B+144B+R107+132B+131B+130B+128B+127B+126B+129B+815E+816E +817E+818E+819E.
2HP193	=152B.
2HP194	=819E+818E+817E+816E+815E+129B+126B+127B+128B+130B+131B+132B+R107+144B +148B+149B+151B.
2HP195	=819E+818E+817E+816E+815E+129B+126B+127B+128B+130B+131B+132B+R107+144B +148B+149B+151B.
2HP196	=819E+818E+817E+816E+815E+129B+126B+127B+128B+130B+131B+132B+R107+144B +148B+149B.
2HP197	=145B+148B+150B.
2HP198	=145B+148B+150B.
2HP199	=145B+148B+150B.
2HP200	=/OMEGA.
2HP201	=/OMEGA.
2HP202	=145B+148B+150B.
2HP203	=152B.
2HP204	=152B.
2HP205	=152B.
2HP206	=152B.
2HP207	=152B.
2HP208	=150B+149B+151B+152B.

Table E.2 Cable to Cable Routing Point Equations (Continued)

Cable	Routing
2HP209	=149B+151B+152B.
2HP250	=121B+122B.
2HP252	=121B+122B.
2HP255	=121B+122B.
2HP256	=121B+122B.
2HP280	=821B+124B+123B+126B+125B+121B+122B.
2IN010	=1407E+1401E+R432+1401A+1400A+1404A+1405A+1414A+1409A+1410A+R436+1425A +1424A+1428A+1431A+1496A+1436AD.
2IN011	=1407F+1401F+R433+1401B+1400B+1404B+1405B+1414B+1409B+1410B+R437+1425B +1424B+1428B+1431B+1496B+1436BE+R449.
2IN012	=1082A+1081A+1080A+1079A+1075A+1076A+1077A+R338+1120A.
2IN013	=1082B+1081B+1080B+1079BD+1075D+1076D+1077D+R339+1120B.
2IN014	=/OMEGA.
2IN015	=/OMEGA.
2IN016	=1407F+1401F+R433+1401B+1400B+1404B+1405B+1414B+1409B+1410B+R437+1425B +1424B+1428B+1431B+1496B+1436BE.
2IN017	=/OMEGA.
2IN018	=/OMEGA.
2IN019	=1082B+1081B+1080B+1079BD+1075D+1076D+1077D+R339+1120B.
2IN020	=490B+489B+488B+487B+486B+485B+484B+483B+R162+481B+480B+479B+419B+420B +445B+446B+447B+R168+581C+580C+579C+578C+577C+576C+575C+574C+573C+560C +561C+562C.
2IN021	=562C+561C+598C+597C+604C+577C+578C+579C+580C+581C+R168+447B+446B.
2IN022	=698C+699C+803C+682C+681C+658C+695C+R185+R186+619D+R128+273A+271A+267A.
2IN023	=1119B+1118B+1117B+1116B+1115B+1114B+1113B+1131B+1125B+1124B+1129B+R324 +1091F+1101F+582C+R196+581C+580C+579C+578C+577C+576C+575C+574C+573C+560C +561C+562C.
2IN024	=309C+802C+402C+281C+279C+278C+277C+276C+275AC+274A+R128+619D+R186+R185 +695C+658C+681C+682C+803C+699C+698C.
2IN027	=1496B+1431B+1428B+1423B+1422B+1421B+1427B+R430+1399B+1398B+1402B+1395B +1375B+1374B+1373B+1372B+620C+621C+622C+623C+624C+R189+689C+688C+687C +685C+684C+683C+802C+699C+698C.
2IN039	=1119B+1118B+1116B+1115B+1114B+1113B+1131B+1125B+1124B+1129B+R324+1091F +1101F+582C+R196+581C+580C+579C+578C+577C+576C+575C+574C+573C+560C+561C +562C.
2IN040	=/OMEGA.
2IN042	=/OMEGA.
2IN047	=1119B+1120B+R339+1077D+1076D+1075D+1074D+1073D+1072D+1071D+1070D+1181D +1069D+1068D+572C+R195+571C+570C+569C+568C+567C+566C+565C+564C+563C.
2IN051	=1119B+1118B+1117B+1116B+1115B+1114B+1113B+1131B+1125B+1124B+1129B +R324+1091F+1101F+582C+R196+581C+580C+579C+578C+577C+576C+575C+574C +573C+560C+561C+562C.
2IN052	=1407F+1401F+R433+1401B+1400B+1404B+1405B+1414B+1409B+1410B+R437+1425B +1424B+1428B+1431B+1496B+1436BE+R449.

Table E.2 Cable to Cable Routing Point Equations (Continued)

Cable	Routing
2IN053	=R449+1436BE+1496B+1431B+1428B+1423B+1422B+1421B+1420B+1426B+R428+1394C +1393C+1392C+1391C+614D+615D+616D+617D+618D+619D+R128+273A+271A+270A +258A+257A+256A+255A+254A+253A+252A.
2IN054	=1082B+1081B+1080B+1079BD+1075D+1076D+1077D+R339+1120B.
2IN055	=1119B+1118B+1117B+1116B+1115B+1114B+1113B+1131B+1125B+1124B+1129B+R324 +1091F+1101F+582C+R168+447B+446B+445B+420B+419B+418B+431B+430B+429B+428B +427B.
2IN080	=562C+561C+560C+573C+574C+575C+576C+577C+578C+579C+589C+606C+R179 +420B+503BD+458D+480D+482D+473D.
2IN081	=562C+561C+560C+573C+574C+575C+576C+577C+578C+579C+589C+606C+R179 +420B+503BD+458D+480D+482D+473D.
2IN082	=1119B+1120B+R339+1077D+1076D+1075D+1074D+1073D+1072D+1071D+1070D +1181D+1069D+1068D+572C+R195+571C+570C+569C+568C+567C+566C+565C +564C+563C.
2IN083	=1119B+1118B+1117B+1116B+1115B+1114B+1113B+1131B+1125B+1124B+1129B +R324+1091F+1101F+582C+R196+581C+580C+579C+578C+577C+576C+575C +574C+573C+560C+561C+562C.
2LP010	=283A+284A+285A+294A+295A+296A+297A+298A+1333A+1334A+1335A+1339A+1340A +1349A+1350A+1351A+1352A+1370AB+1364B+1365B+1366B+1367B+R409+1332A+1331A +1330A+R403+1312A+1311A+1310A+1309A.
2LP012	=283C+282C+281C+279C+278C+277C+276C+275AC+274A+R127+R128+619D+R186+R185 +695C+658C+681C+804C.
2LP013	=265A+266A+267A+271A+273A+R128+619D+R186+R185+695C+658C+681C+804C.
2LP020	=1345D+1344D+1343D+R424+1342D+1340D+1349D+1359D+1368D+1352D+1370CD+1364D +1365D+1366D+1367D+R410+R404+1312B+1311B+1310B+1309B+1308B.
2LP021	=1345D+1344D+1343D+R424+1342D+1340D+1349D+1359D+1360D+1361D+1485D+1362D +R419+1399B+1398B+1402B+1375CB+1374C+1373C+1372C+620D+621D+622D+623D +624D+R189+689C+688C+687C+685C+684C+678C+677C+676C+675C+674C+673C+672C.
2LP022	=1344B+R423+1343B+1340B+1349B+1359B+1360B+1361B+1362B+R418+R429+1427A +1421A+1422A+1423A+1428A+1429A.
2LP023	=1344D+1343D+R424+1342D+1340D+1349D+1359D+1360D+1361D+1362D+R419+R430 +1427B+1421B+1422B+1423B+1428B+1429B.
2LP023	=1344D+1343D+R424+1342D+1340D+1349D+1359D+1360D+1361D+1362D+R419+R430 +1427B+1421B+1422B+1423B+1428B+1429B.
2LP024	=265F+858F+863F+860F+861F+862FA+R131+625D+624D+627D+R192+688E+687E+686CE +694C+676C+675C+674C+673C+672C+804C.
2LP025	=1344D+1343D+R424+1342D+1339D+1335D+1334D+1333D+298D+297D+305D+794D+306D +307AD+244A+268A+251A+250A+249A+248A+857FA+856F+263F+264F.
2LP027	=1345D+1344D+1343D+R424+1342D+1340D+1349D+1359D+1368D+1352D+1353D+1354D +1355D+1356D+1357D.
2LP028	=265F+858F+863F+860F+861F+862FA+R131+625D+624D+627D+R192+688E+687E+686CE +694C+676C+675C+674C+673C+672C+804C.

Table E.2 Cable to Cable Routing Point Equations (Continued)

Cable	Routing
2LP029	=1344D+1343D+R424+1342D+1339D+1335D+1334D+1333D+298D+297D+305D+794D+306D +307AD+244A+268A+251A+250A+249A+248A+857FA+856F+263F+264F.
2LP033	=265A+266A+267A+271A+273A+R128+619D+R186+R185+695C+658C+681C+804C.
2LP034	=265A+266A+267A+271A+273A+R127+274A+275AC+276C+310C.
2LP035	=283C+282C+281C+279C+278C+277C+276C+275AC+274A+R127+273A+271A+267A+266A +265A.
2LP036	=1427B+R430+R419+1362D+1485D+1361D+1360D+1359D+1349D+1340D+1339D+1335D +1334D+1333D+298D+297D+305D+794D+793CD+283C+282C+281C+279C+278C+277C +276C+275AC+274A+R127+273A+271A+267A+266A+265A.
2LP037	=1427B+R430+R419+1362D+1485D+1361D+1360D+1359D+1349D+1340D+1339D+1335D +1334D+1333D+298D+297D+305D+794D+793CD+283C+282C+281C+279C+278C+277C +276C+275AC+274A+R127+273A+271A+267A+266A+265A.
2LP040	=265A+266A+267A+271A+273A+R127+274A+275AC+276C+277C+278C+279C+281C+402C +292C+293C+1336F+1337F+1338FC+1339C+1340C+1349C+1350C+1351C+1352C+1370CD +1364D+1365D+1366D+1367D+R410+R404+1312B+1311B+1310B.
2LP041	=283C+282C+281C+279C+278C+277C+276C+275AC+274A+R127+273A+271A+267A+266A +265A.
2LP060	=1345D+1344D+1343D+R424+1342D+1339D+1335D+1334D+1333D+298D+297D+305D+794D +306D+307AD+244A+268A+251A+250A+249A+248A+857FA+856F+263F+264F.
2LP061	=265A+266A+267A+271A+273A+R128+619D+R186+R185+695C+658C+681C+804C.
2LP086	=283C+282C+281C+279C+278C+277C+276C+275AC+274A+R127+273A+271A+267A+266A +265A.
2NB012	=1427B+R430+1399B+1398B+1402B+1375CB+1374C+1373C+1372C+620D+621D+622D +623D+624D+625D+R131+244A+268A+251A+250A+249A+248A+857FA+856F+263F.
2NB013	=1427B+R430+1399B+1398B+1402B+1375CB+1374C+1373C+1372C+620D+621D+622D +623D+624D+625D+R131+244A+268A+251A+250A+249A+248A+857FA+856F+263F.
2NB014	=1427B+R430+1399B+1398B+1402B+1375CB+1374C+1373C+1372C+620D+621D+622D +623D+624D+625D+R131+244A+268A+251A+250A+249A+248A+857FA+856F+263F.
2NB017	=1310B+1311B+1312B+R404+R410+1367D+1366D+1365D+1364D+1370CD+1352C+1351C +1350C+1349C+1340C+1339C+1338FC+1337F+1336F+293C+292C+402C+281C +279C+278C+277C+276C+275AC+274A+R127+273A+271A+267A+266A+265A+264A+262A.
2NB018	=1310B+1311B+1312B+R404+R410+1367D+1366D+1365D+1364D+1370CD+1352C+1351C +1350C+1349C+1340C+1339C+1338FC+1337F+1336F+293C+292C+402C+281C+279C +278C+277C+276C+275AC+274A+R127+273A+271A+267A+266A+265A+264A+262A.
2NB019	=1303B+1302B+1301B+1307B+R401+R407+1336F+293C+292C+402C+281C+279C+278C +277C+276C+275AC+274A+R127+273A+271A+267A+266A+265A+264A.
2NB020	=1303B+1302B+1301B+1307B+R401+R407+1336F+293C+292C+402C+281C+279C+278C +277C+276C+275AC+274A+R127+273A+271A+267A+266A+265A+264A.
2NB021	=263F+856F+857FA+248A+249A+250A+251A+268A+244A+307AD+306D+793CD+284C+833C +294C+295C+296C+297C+298C+1333C+1334C+1335C+1339C+1340C+1341C+R422+1390B +1374B+1375B+1376B+1388B.
2NB023	=263F+856F+857FA+248A+249A+250A+251A+268A+244A+307AD+306D+793CD+284C+833C +294C+295C+296C+297C+298C+1333C+1334C+1335C+1339C+1340C+1341C+R422+1390B +1374B+1375B+1376B+1388B.

Table E.2 Cable to Cable Routing Point Equations (Continued)

Cable	Routing
2NB025	=263F+856F+857FA+248A+249A+250A+251A+268A+244A+307AD+306D+793CD+284C+833C +294C+295C+296C+297C+298C+1333C+1334C+1335C+1339C+1340C+1341C+R422+1390B +1374B+1375B+1376B+1388B.
2NB027	=263F+856F+857FA+248A+249A+250A+251A+268A+244A+307AD+306D+793CD+284C+833C +294C+295C+296C+297C+298C+1333C+1334C+1335C+1339C+1340C+1341C+R422+1390B +1374B+1375B+1376B+1388B.
2NB029	=263F+856F+857FA+248A+249A+250A+251A+268A+244A+307AD+306D+793CD+284C+833C +294C+295C+296C+297C+298C+1333C+1334C+1335C+1339C+1340C+1341C+R422+1390B +1374B+1375B+1376B+1388B.
2NB031	=263F+856F+857FA+248A+249A+250A+251A+268A+244A+307AD+306D+793CD+284C+833C +294C+295C+296C+297C+298C+1333C+1334C+1335C+1339C+1340C+1341C+R422+1390B +1374B+1375B+1376B+1388B.
2NB033	=263F+856F+857FA+248A+249A+250A+251A+268A+244A+307AD+306D+793CD+284C+833C +294C+295C+296C+297C+298C+1333C+1334C+1335C+1339C+1340C+1341C+R422+1390B +1374B+1375B+1376B+1388B.
2NB035	=264F+265F+858F+863F+860F+861F+862FA+R131+625D+624D+627D+R192+688E+687E +686CE+667C+666C+665C+664C+663C+662C+661C+660C+691C+672C.
2NB036	=264F+265F+858F+863F+860F+861F+862FA+R131+625D+624D+627D+R192+688E+687E +686CE+667C+666C+665C+664C+663C+662C+661C+660C+691C+672C.
2NB037	=264F+265F+858F+863F+860F+861F+862FA+R131+625D+624D+627D+R192+688E+687E +686CE+667C+666C+665C+664C+663C+662C+661C+660C+691C+672C.
2NB038	=264F+265F+858F+863F+860F+861F+862FA+R131+625D+624D+627D+R192+688E+687E +686CE+667C+666C+665C+664C+663C+662C+661C+660C+691C+672C.
2NB039	=264F+265F+858F+863F+860F+861F+862FA+R131+625D+624D+627D+R192+688E+687E +686CE+667C+666C+665C+664C+663C+662C+661C+660C+691C+672C.
2NB040	=264A+265A+266A+267A+270A+269A+268A+244A+R131+625D+R190+R189+689C+688C +687C+685C+684C+678C+677C+676C+675C+674C+673C+672C.
2NB041	=264A+265A+266A+267A+270A+269A+268A+244A+R131+625D+R190+R189+689C+688C +687C+685C+684C+678C+677C+676C+675C+674C+673C+672C.
2NB042	=264A+265A+266A+267A+270A+269A+268A+244A+R131+625D+R190+R189+689C+688C +687C+685C+684C+678C+677C+676C+675C+674C+673C+672C.
2NB044	=310C+276C+275AC+274A+R127+273A+271A+267A+266A+265A+264A.
2NB045	=444B+443B+426B+R166+571D+570D+583D+584D+585D+586D+587D+588D.
2NB046	=444B+443B+426B+R166+571D+570D+583D+584D+585D+586D.
2NB047	=1119B+1120B+R339+1077D+1076D+1075D+1074D+1073D+1072D+1071D+1070D+1181D +1086BD+1057B+1087B+1088B+1098B+572D+R166+426B+443B.
2NB048	=1119B+1120B+R339+1077D+1076D+1075D+1074D+1073D+1072D+1071D+1070D+1181D +1086BD+1057B+1087B+1088B+1098B+572D+R166+426B+443B.
2NB049	=1120B+R339+1077D+1076D+1075D+1074D+1073D+1072D+1071D+1070D+1181D+1086BD +1057B+1087B+1088B+1098B+572D+R166+426B+443B.
2NB050	=1120B+R339+1077D+1076D+1075D+1074D+1073D+1072D+1071D+1070D+1181D+1086BD +1057B+1087B+1088B+1098B+572D+R166+426B+443B.
2NB051	=1120B+R339+1077D+1076D+1075D+1074D+1073D+1072D+1071D+1070D+1181D+1086BD +1057B+1087B+1088B+1098B+572D+R166+426B+443B.

Table E.2 Cable to Cable Routing Point Equations (Continued)

Cable	Routing
2NB052	=1011B+1010B+1009B+1008B+1005B+1004B+R301+R304+1046B+1045B+1047B+1044B +1043B+1042B+1041B+1040B+1039B+1038B+1037B+1026B+453F+R173+454F+455F +456F+446B+444B.
2NB053	=1011B+1010B+1009B+1008B+1005B+1004B+R301+R304+1046B+1045B+1047B+1044B +1043B+1042B+1041B+1040B+1039B+1038B+1037B+1026B+453F+R173+454F+455F +456F+446B+444B.
2NB054	=1011B+1010B+1009B+1008B+1005B+1004B+R301+R304+1046B+1045B+1047B+1044B +1043B+1042B+1041B+1040B+1039B+1038B+1037B+1026B+453F+R173+454F+455F +456F+446B+444B.
2NB055	=1011B+1010B+1009B+1008B+1005B+1004B+R301+R304+1046B+1045B+1047B+1044B +1043B+1042B+1041B+1040B+1039B+1038B+1037B+1026B+453F+R173+454F+455F +456F+446B+444B.
2NB056	=456G+455G+454G+R165+572C+1068D+1069D+1181D+1070D+1071D+1085D.
2NB058	=456G+455G+454G+R165+572C+1068D+1069D+1181D+1070D+1071D+1085D.
2NB060	=456G+455G+454G+R165+572C+1068D+1069D+1181D+1070D+1071D+1085D.
2NB062	=456G+455G+454G+R165+572C+1068D+1069D+1181D+1070D+1071D+1085D.
2NB064	=444B+445B+420B+419B+479B+480B+481B+R162+483B+494B.
2NB070	=456G+455G+454G+R165+572C+1068D+1069D+1181D+1070D+1071D+1085D.
2NB071	=456G+455G+454G+R165+572C+1068D+1069D+1181D+1070D+1071D+1085D.
2NB074	=858F+863F+860F+861F+862FA+R131+625D+624D+627D+R192+688E+687E+686CE+667C +666C.
2NB075	=858F+863F+860F+861F+862FA+R131+625D+624D+627D+R192+688E+687E+686CE.
2NB077	=456G+451G+452G+R167+581D+580D+579D+578D+577D+604D.
2NB085	=1427B+R430+1399B+1398B+1402B+1375CB+1374C+1373C+1372C+620D+621D+622D +623D+624D+625D+R131+244A+268A+251A+250A+249A+248A+857FA+856F+263F.
2NB087	=1427B+R430+1399B+1398B+1402B+1375CB+1374C+1373C+1372C+620D+621D+622D +623D+624D+R131+244A+268A+251A+250A+249A+248A+857FA+856F+263F.
2NB135	=456G+455G+454G+R165+572C+1068D+1069D+1181D+1070D+1071D+1085D.
2NB138	=456G+455G+454G+R165+572C+1068D+1069D+1181D+1070D+1071D+1085D.
2NB140	=456G+455G+454G+R165+572C+1068D+1069D+1181D+1070D+1071D+1085D.
2NB143	=456G+455G+454G+R165+572C+1068D+1069D+1181D+1070D+1071D+1085D.
2NB145	=456G+455G+454G+R165+572C+1068D+1069D+1181D+1070D+1071D+1085D.
2NB148	=456G+455G+454G+R165+572C+1068D+1069D+1181D+1070D+1071D+1085D.
2NB150	=456G+455G+454G+R165+572C+1068D+1069D+1181D+1070D+1071D+1085D.
2NB153	=456G+455G+454G+R165+572C+1068D+1069D+1181D+1070D+1071D+1085D.
2NB155	=444B+443B+425B+R178+605D+593D+594D+595D+596D+597D.
2NB156	=444B+443B+425B+R178+605D+593D+594D+595D+596D+597D.
2NB157	=444B+443B+425B+R178+605D+593D+594D+595D+596D+597D.
2NB158	=266A+267A+271A+273A+R127+274A+275AC+276C+277C+278C+279C+281C+402C+292C +293C+1336F+1337F+1338FC+1339C+1340C+1341C+R422+1390B+1373B.
2NB159	=266A+267A+271A+273A+R127+274A+275AC+276C+277C+278C+279C+281C+402C+292C +293C+1336F+1337F+1338FC+1339C+1340C+1341C+R422+1390B+1373B.
2NB160	=858F+863F+860F+861F+862FA+307AD+306D+793CD+283C+282C+402C+292C+293C +1336F+1337F+1338FC+1339C+1340C+1341C+R422+1390B+1373B.

Table E.2 Cable to Cable Routing Point Equations (Continued)

Cable	Routing
2NB161	858F+863F+860F+861F+862FA+307AD+306D+793CD+283C+282C+402C+292C+293C +1336F+1338FC+1339C+1340C+1341C+R422+1390B+1373B.
2NB162	858F+863F+860F+861F+862FA+307AD+306D+793CD+283C+282C+402C+292C+293C +1336F+1338FC+1339C+1340C+1341C+R422+1390B+1373B.
2NB163	858F+863F+860F+861F+862FA+307AD+306D+793CD+283C+282C+402C+292C+293C +1336F+1338FC+1339C+1340C+1341C+R422+1390B+1373B.
2NB164	858F+863F+860F+861F+862FA+307AD+306D+793CD+283C+282C+402C+292C+293C +1336F+1338FC+1339C+1340C+1341C+R422+1390B+1373B.
2NB165	858F+863F+860F+861F+862FA+307AD+306D+793CD+283C+282C+402C+292C+293C +1336F+1338FC+1339C+1340C+1341C+R422+1390B+1373B.
2NB166	858F+863F+860F+861F+862FA+R131+625D+624D+627D+R192+688E+687E+686CE+694C +676C+675C+674C+673C+672C.
2NB167	858F+863F+860F+861F+862FA+R131+625D+624D+627D+R192+688E+687E+686CE+694C +676C+675C+674C+673C+672C.
2NB168	858F+863F+860F+861F+862FA+R131+625D+624D+627D+R192+688E+687E+686CE+694C +676C+675C+674C+673C+672C.
2NB169	858F+863F+860F+861F+862FA+R131+625D+624D+627D+R192+688E+687E+686CE+694C +676C+675C+674C+673C+672C.
2NB170	858F+863F+860F+861F+862FA+R131+625D+624D+627D+R192+688E+687E+686CE+694C +676C+675C+674C+673C+672C.
2NB171	858F+863F+860F+861F+862FA+R131+625D+624D+627D+R192+688E+687E+686CE+694C +676C+675C+674C+673C+672C.
2NB172	858F+863F+860F+861F+862FA+R131+625D+624D+627D+R192+688E+687E+686CE+694C +676C+675C+674C+673C+672C.
2NB173	858F+863F+860F+861F+862FA+R131+625D+624D+627D+R192+688E+687E+686CE+694C +676C+675C+674C+673C+672C.
2NB201	173C+172C+171C+191CD+R124+192D+R125+342B+344B+345B+497B+328B+327B+326B +784B+325B+324B+323B+2111B+R612+2110BC+2075C+2074C+2107C+2061BC +504B+505B.
2NB202	173C+172C+171C+191CD+R124+192D+R125+342B+344B+345B+346B+R155+548F+547F +560F+561F+601F+600F+593F.
2NB204	172C+171C+191CD+R124+192D+R125+342B+344B+345B+497B+328B+327B+326B+784B +325B+324B+323B+2111B+R612+2110BC+2075C+2074C+2107C+2061BC+504B+505B.
2NB205	172C+171C+191CD+R124+192D+R125+342B+344B+345B+346B+R155+548F+547F+560F +561F+601F+600F+593F.
2NB220	672C+673C+674C+675C+676C.
2NB225	308C+309C+802C+402C+281C+279C+278C+277C+276C+275AC+274A+R127+273A+271A +267F+266F+265F+264F+263F+856F+857FA.
2NB242	490B+489B+488B+487B+486B+485B+484B+483B+R162+481B+480B+479B+418B+417B +416B+415B.
2NB243	490B+489B+488B+487B+486B+485B+484B+483B+R162+481B+480B+479B+419B+420B +R179+606C+588C+587C+599C+593C+594C+595C+596C+597C.

Table E.2 Cable to Cable Routing Point Equations (Continued)

Cable	Routing
2NB245	=490B+489B+488B+487B+486B+485B+484B+483B+R162+481B+480B+479B+418B+417B +416B+415B.
2NB246	=490B+489B+488B+487B+486B+485B+484B+483B+R162+481B+480B+479B+419B+420B +R179+606C+588C+587C+599C+593C+594C+595C+596C+597C.
2NB360	=1407F+1401F+R433+1401B+1400B+1403B+1402B+1395B+1375B+1374B+1390B+R422 +1341C+1340C+1339C+1338FC+1337F.
2NB361	=1408F+1411F+R435+1411B+1414B+1413B+1379B+1378B+1377B+1376B+1375B+1374B +1373B+1372B+620C+621C+622C+623C+624C+R189+689C+688C+687C+685C+684C+683C +682C+804C.
2NB363	=308C+309C+802C+292C+293C+1336F.
2NB367	=308C+309C+802C+402C+281C+279C+278C+277C+276C+275AC+274A+R127+R128+619D +R186+R185+695C+658C+681C+672C.
2NB376	=672C+673C+674C+675C+676C.
2NB581	=444B+443B+426B+R166+571D+570D+569D+590D+591D+592D+593D+594D+595D+596D +597D.
2NB582	=444B+443B+426B+R166+571D+570D+569D+590D+591D+592D+593D+594D+595D+596D +597D.
2NB583	=444B+443B+426B+R166+571D+570D+569D+590D+591D+592D+593D+594D+595D+596D +597D.
2NB584	=444B+443B+426B+R166+571D+570D+569D+590D+591D+592D+593D+594D+595D+596D +597D.
2NB585	=444B+443B+426B+R166+571D+570D+569D+590D+591D+592D+593D+594D+595D+596D +597D.
2NB631	=2009D+2008D+2007D+R583+2007B+2006B+2005B+2021B+2014B+2013B+2083C+2082C +2081C+2080C.
2NB632	=2009D+2008D+2007D+R583+2007B+2006B+2005B+2021B+2014B+2013B+2012B+2011B +2010B+511B+556B+557BG+524G+523EG+543E+598E+597E+596E+595E+594E+593E +592E.
2NB761	=1364D+1370CD+1352C+1351C+1350C+1349C+1340C+1339C+1335C+1334C+1333C+298C +297C+296C+295C+294C+833C+284C+793CD+306D+307AD+244A+268A+269A+270A+267F +266F.
2NB769	=308C+309C+802C+402C+281C+279C+278C+277C+276C+275AC+274A+R127+273A+271A +267A+266A.
2NB797	=445B+446B+447B+R168+582C+1101F+1091F+R324+1129B+1124B+1125B+1131B+1113B +1114B+1115B+1116B+1117B+1118B.
2NB798	=445B+446B+447B+R168+582C+1101F+1091F+R324+1129B+1124B+1125B+1131B+1113B +1114B+1115B+1116B+1117B+1118B.
2NB799	=445B+446B+447B+R168+582C+1101F+1091F+R324+1129B+1124B+1125B+1131B+1113B +1114B+1115B+1116B+1117B+1118B.
2NB800	=445B+446B+447B+R168+582C+1101F+1091F+R324+1129B+1124B+1125B+1131B+1113B +1114B+1115B+1116B+1117B+1118B.
2NB801	=445B+446B+447B+R168+582C+1101F+1091F+R324+1129B+1124B+1125B+1131B+1113B +1114B+1115B+1116B+1117B+1118B.

Table E.2 Cable to Cable Routing Point Equations (Continued)

Cable	Routing
2NB802	=445B+446B+447B+R168+582C+1101F+1091F+R324+1129B+1124B+1125B+1131B+1113B +1114B+1115B+1116B+1117B+1118B.
2NB803	=445B+446B+447B+R168+582C+1101F+1091F+R324+1129B+1124B+1125B+1131B+1113B +1114B+1115B+1116B+1117B+1118B.
2NB826	=445B+444B.
2NB827	=445B+444B.
2NB881	=R386+1265B.
2NB882	=1566B+1558B+1559B+1560B+R497+1578B+1577B+1576B+1575B+1574B+1573B+1585B +1584B.
2NB884	=R386+1265B+1264B.
2NB885	=1566B+1558B+1559B+1560B+R497+1578B+1577B+1576B+1575B+1574B+1573B+1586B.
2NB887	=R386+1265B.
2NB888	=1566B+1558B+1559B+1560B+R497+1578B+1577B+1576B+1575B+1574B+1573B+1585B +1584B+1583B+1582B.
2NB890	=R386+1265B.
2NB891	=1566B+1558B+1559B+1560B+R497+1578B+1577B+1576B+1575B+1574B+1573B+1585B +1584B+1583B+1582B.
2NB893	=R386+1265B+1264B.
2NB894	=1566B+1558B+1559B+1560B+R497+1578B+1577B+1576B+1575B+1574B+1573B+1586B +1587B+1588B.
2NB896	=R386+1265B.
2NB897	=1566B+1558B+1559B+1560B+R497+1578B+1577B+1576B+1575B+1574B+1573B+1585B +1584B.
2NB899	=R386+1265B+1264B.
2NB900	=1566B+1558B+1559B+1560B+R497+1578B+1577B+1576B+1575B+1574B+1573B+1586B.
2PC010	=/OMEGA.
2PC012	=814G+813G+812G+811G+810G+809G+808G+807G+805G.
2PC013	=832F+831F.
2PC015	=814H+813H+812H+811H+810H+809H+808H+807H+805H+835H.
2PC016	=829E+828E+827E+826E+825E+824E+822E.
2PC017	=865G+813G+812G+811G+810G+809G+808G+807G+805G.
2PC018	=829F+828F+827F+826F+825F+824F+822F+832F+831F.
2PC019	=814H+813H+812H+811H+810H+809H+808H+807H+805H+835H.
2PC020	=/OMEGA.
2PC021	=814G+813G+812G+811G+810G+809G+808G+807G+805G.
2PC022	=832F+831F.
2PC023	=814H+813H+812H+811H+810H+809H+808H+807H+805H+835H.
2PC024	=822E+824E+825E+826E+827E+828E+829E+830E.
2PC025	=805G+807G+808G+809G+810G+811G+812G+813G.
2PC026	=831F+832F+822F+824F+825F+826F+827F+828F+829F+830F.
2PC027	=835H+805H+807H+808H+809H+810H+811H+812H+813H.
2PC028	=822E+824E+825E+826E+827E+828E+829E+830E.
2PC029	=805G+807G+808G+809G+810G+811G+812G+813G.

Table E.2 Cable to Cable Routing Point Equations (Continued)

Cable	Routing
2PC030	=831F+832F+822F+824F+825F+826F+827F+828F+829F+830F.
2PC031	=835H+805H+807H+808H+809H+810H+811H+812H+813H.
2PC032	=266F.
2PC032	=266F.
2PC033	=266F.
2PC040	=/OMEGA.
2PC041	=/OMEGA.
2PC083	=446B+447B+R168+R196+581C+580C+589C+588C.
2PC084	=587C+588C.
2PC086	=858F+863F+860F+861F+862FA+R131+625D+624D+627D+R192+688E+687E+686CE+667C +666C.
2PC087	=667C+666C.
2PC088	=446B+456F+455F+454F+R173+453F+1026B+1037B+1038B+1039B+1040B+1041B+1042B +1043B+1044B+1047B+1045B+1046B+R304+R301+1004B+1005B+1008B+1009B+1010B +1011B.
2PC089	=446B+447B+R168+R196+581C+580C+579C+578C+577C+576C+575C.
2PC092	=266A+267A+271A+273A+R127+274A+275AC+276C+277C+278C+279C+281C+402C+292C +293C+1336F+R407+R401+1307B+1301B+1302B+1303B.
2PC093	=858F+863F+860F+861F+862FA+R131+625D+624D+627D+R192+688E+687E+686CE+694C +676C+675C+674C+673C+691C.
2PC094	=858F+863F+860F+861F+862FA+R131+625D+624D+627D+R192+688E+687E+686CE.
2PC095	=667C+666C.
2PC097	=266F+267F+271A+273A+R128+619D+R186+618C+617C+616C+615C+614C+1391B+R427 +1446B+1447B+1448B+1442B+1445B+R443+1418B+1419B+1420B+1421B+1422B+1423B +1428B+1431B+1432B+1433B+1434B.
2PC118	=594D+593D+592D+591D+590D+569D+570D+571D+R166+426B+443B+444B.
2PC119	=672C+673C+674C+675C+676C+694C+686CE+687E+688E+R192+627D+624D+625D+R131 +862FA+861F+860F+863F+858F.
2PC122	=829E+828E+827E+826E+825E+824E+822E.
2PC123	=813G+812G+811G+810G+809G+808G+807G+805G.
2PC130	=/OMEGA.
2PC131	=814G+813G+812G+811G+810G+809G+808G+807G+805G.
2PC132	=832F+831F.
2PC133	=814H+813H+811H+810H+809H+808H+807H+805H+835H.
2PC134	=310C+276C+275AC+274A+R127+273A+271A+267F+266F.
2PC135	=266F+267F+271A+273A+R128+619D+R186+R185+695C+658C+681C+804C.
2PC138	=494B+483B+R162+481B+480B+479B+419B+420B+445B.
2PC139	=446B+447B+R168+R196+581C+580C+579C+578C+577C+604C+597C.
2PC142	=830F+829F+828F+827F+826F+825F+824F+822F+832F+831F.
2PC143	=806H+805H+835H.
2RD010	=284A+833A+294A+295A+296A+297A+298A+1333A+1334A+1335A+1338AE+1337E+1336E +R406+R400+1307A+1301A.
2RD014	=283C+282C+281C+279C+278C+277C+276C+275AC+274A+R127+R128+619D+R186+R185 +695C+658C+681C+672C+673C+674C+675C.

Table E.2 Cable to Cable Routing Point Equations (Continued)

Cable	Routing
2RD018	=487A+486A+485A+484A+483A+482A+471A+470A+469A+468A+467A+466A+454A+R172 +453A+1026A+1037A+1038A+1039A+1040A+1041A+1042A+1043A+1044A+1045A+1046A +R303+R300+1004A+1005A.
2RD022	=487B+486B+485B+484B+483B+R162+481B+480B+479B+419B+420B+445B+446B+447B +R168+581C+580C+579C+578C+577C+604C+596C+595C+594C.
2RD027	=1408F+1411F+R435+1411B+1409B+1410B+R437+1425B+1424B+1428B+1431B+1432B +1433B+1434B.
2RD028	=1407F+1401F+R433+1401B+1400B+1403B+1402B+1395B+1375B+1374B+1373B+1372B +620C+621C+622C+623C+624C+R189+689C+688C+687C+686CE+694C+676C+675C.
2RD037	=1434B+1435B+R440+1384B+1383B+1382B+1381B+1380B+1379B+1378B+1377B+1376B +1395B+1375CB+1374C+1373C+1372C+620D+621D+622D+623D+627D+R192+688E+687E +686CE+694C+676C+675C+674C.
2RD040	=/OMEGA.
2RD041	=/OMEGA.
2RD049	=595D+594D+593D+605D+R178+438B+439B+440B.
2RH010	=284A+833A+294A+295A+296A+297A+298A+1333A+1334A+1335A+1338AE+1337E+1336E +R406+R400+1307A+1302A+1303A.
2RH013	=283C+282C+281C+279C+278C+277C+276C+275AC+274A+R127+R128+619D+R186+R185 +695C+658C+681C.
2RH014	=283C+282C+281C+279C+278C+277C+276C+275AC+274A+R127+R128+619D+R186+R185 +695C+658C+681C.
2RH016	=488A+487A+486A+485A+484A+483A+482A+471A+470A+469A+468A+467A+466A+454A +R172+453A+1026A+1037A+1038A+1039A+1040A+1041A+1042A+1043A+1044A+1045A +1046A+R303+R300+1004A+1005A+1006A+1007A+1013A+1014A+1012A.
2RH019	=487B+486B+485B+484B+483B+R162+481B+480B+479B+419B+420B+445B+446B+447B +R168+R196+581C+580C+579C+578C+577C+604C+597C.
2RH020	=433B+434B+435B+449G+450G+787G+451G+452G+R167+581D+580D+579D+578D+577D +576D+575D+574D+573D+560D.
2RH022	=488A+487A+486A+485A+484A+483A+482A+471A+470A+469A+468A+467A+466A+454A +R172+453A+1026A+1037A+1038A+1039A+1040A+1041A+1042A+1043A+1044A+1045A +1046A+R303+R300+1004A+1005A+1006A+1007A.
2RH025	=799BD+474D+473D+482D+480D+458D+503BD+420B+R179+606C+589C+579C+578C+577C +576C+575C+574C+573C+560C.
2RH026	=799BD+474D+473D+482D+480D+458D+503BD+420B+445B+444B+443B.
2RH028	=1345D+1344D+1343D+R424+1342D+1340D+1349D+1359D+1360D+1361D+1485D+1362D +R419+1399B+1398B+1402B+1395B+1375B+1374B+1390B+R422+1341C+1340C+1339C +1338FC+1337F+R407+R401+1307B.
2RH029	=1345D+1344D+1343D+R424+1342D+1340D+1349D+1359D+1360D+1361D+1485D+1362D +R419+1399B+1398B+1402B+1395B+1375B+1374B+1390B+R422+1341C+1340C+1339C +1338FC+1337F+R407+R401+1307B.
2RH031	=1345D+1344D+1343D+R424+1342D+1340D+1349D+1359D+1360D+1361D+1485D+1362D +R419+1399B+1398B+1402B+1375CB+1374C+1373C+1372C+620D+621D+622D+623D +624D +R189+689C+688C+687C+685C+684C+678C+677C+676C+675C+674C+673C+672C.

Table E.2 Cable to Cable Routing Point Equations (Continued)

Cable	Routing
2RH032	=1035E+1033E+R321+1033B+1029B+1028B+1027B+1037B+1038B+1039B+1040B+1041B +1042B+1043B+1044B+1047B+1045B+1046B+R304+R301+1004B+1005B.
2RH033	=1035E+1033E+R321+1033B+1029B+1028B+1027B+1037B+1038B+1039B+1040B+1041B +1042B+1043B+1044B+1047B+1045B+1046B+R304+R301+1004B+1005B.
2RH035	=433B+424B+R178+605D+593D+594D+595D+596D+597D+598D.
2RH037	=1096B+1087B+1057B+1086BD+1181D+1070D+1071D+1072D+1073D+1074D+1075D+1076D +1077D+R307+R304+R301+1004B+1005B+1006B.
2RH039	=1096B+1087B+1057B+1058B+1065B+1066B+R314+1036B+1027B+1026B+453F+R173 +454F+455F+456F+446B+444B+443B+425B+R178+605D+593D+594D+595D+596D+597D +598D.
2RH041	=1345D+1344D+1343D+R424+1342D+1340D+1349D+1359D+1360D.
2RH042	=1345D+1344D+1343D+R424+1342D+1339D+1335D+1334D+1333D+298D+297D+305D+794D +793CD+283C+282C+281C+279C+278C+277C+276C+275AC+274A+R127+R128+619D+R186 +R185+695C+658C+681C+804C.
2RH045	=1035E+1033E+R321+1033B+1029B+1028B+1027B+1037B+1038B+1039B+1040B+1041B +1042B+1043B.
2RH046	=433B+424B+425B+426B+R166+571D+570D+569D+568D+602D+603D+597D+598D.
2RH047	=793CD+306D+307AD+862FA+861F+860F+863F+858F+265F.
2RH048	=1345B+1344B+R423+1343B+1340B+1349B+1359B+1360B.
2RH049	=1345D+1344D+1343D+R424+1342D+1340D+1349D+1359D+1360D.
2RH049	=1345D+1344D+1343D+R424+1342D+1340D+1349D+1359D+1360D.
2RH050	=1345D+1344D+1343D+R424+1342D+1339D+1335D+1334D+1333D+298D+297D+305D+794D +306D+307AD+244A+268A+251A+250A+249A+248A+857FA+856F+263F+264F.
2RH051	=265F+858F+863F+860F+861F+862FA+R131+625D+624D+627D+R192+688E+687E+686CE +694C+676C+675C+674C+673C+672C+804C.
2RH051	=265F+858F+863F+860F+861F+862FA+R131+625D+624D+627D+R192+688E+687E+686CE +694C+676C+675C+674C+673C+672C+804C.
2RH052	=1035D+1034D+1033D+R320+1033A+1029A+1028A+1027A+1037A+1038A+1039A+1040A +1041A+1042A+1043A+1044A+1045A+1046A+R303+1016A+1017A+1019A+1020A+1021A +1023A+1024A+1025A.
2RH053	=1035E+1033E+R321+1033B+1029B+1028B+1027B+1037B+1038B+1039B+1040B+1041B +1042B+1043B+1044B+1047B+1045B+1046B+R304+1016B+1017B+1019B+1020B+1021B +1023B+1024B.
2RH054	=433B+424B+425B+443B.
2RH055	=443B+444B+445B+R179+606C+589C+579C+578C+577C+576C+575C+574C+573C+560C.
2RH057	=1345D+1344D+1343D+R424+1342D+1340D+1349D+1359D+1360D+1361D+1485D+1362D +R419+1399B+1398B+1402B+1395B+1375B+1374B+1390B+R422+1341C+1340C+1339C +1338FC+1337F+R407+1314B+1315B+1316B.
2RH058	=1345D+1344D+1343D+R424+1342D+1340D+1349D+1359D+1360D+1361D+1485D+1362D +R419+1399B+1398B+1402B+1375CB+1374C+1373C+1372C+620D+621D+622D+623D +624D+R189+689C+688C+687C+685C+684C+678C+677C+676C+675C+674C+673C+672C.
2RH061	=1035E+1033E+R321+1033B+1029B+1028B+1027B+1037B+1038B+1039B+1040B+1041B +1042B+1043B+1044B+1047B+1045B+1046B+R304+1016B+1017B+1019B+1020B+1021B +1023B+1024B.

Table E.2 Cable to Cable Routing Point Equations (Continued)

Cable	Routing
2RH062	=433B+424B+R178+605D+593D+594D+595D+596D+597D+598D.
2RH072	=1345D+1344D+1343D+R424+1342D+1340D+1349D+1359D+1368D+1352D+1353D+1354D +1371D+1365D+1366D+1367D+R410+R404+1312B+1311B+1310B+1309B+1308B.
2RH073	=1345D+1344D+1343D+R424+1342D+1340D+1349D+1359D+1368D+1352D+1353D+1354D +1371D+1365D+1366D+1367D+R410+R404+1312B+1311B+1310B+1309B+1308B.
2RH074	=1345D+1344D+1343D+R424+1342D+1340D+1349D+1359D+1360D+1361D+1485D+1362D +R419+1399B+1398B+1402B+1375CB+1374C+1373C+1372C+620D+621D+622D+623D +624D+R189+689C+688C+687C+685C+684C+678C+677C+676C+675C+674C+673C+672C.
2RH076	=1035D+1034D+1033D+R320+1033A+1029A+1028A+1027A+1037A+1038A+1039A+1040A +1041A+1042A+1043A+1044A+1045A+1046A+R303+R300+1004A+1005A+1006A+1007A +1013A+1014A+1011A+1015A.
2RH077	=1035E+1033E+R321+1033B+1029B+1028B+1027B+1037B+1038B+1039B+1040B+1041B +1042B+1043B+1044B+1047B+1045B+1046B+R304+R301+1004B+1005B+1008B+1009B.
2RH078	=433B+434B+435B+449G+450G+787G+451G+452G+R167+581D+580D+579D+578D+577D +576D+575D+574D+573D+560D.
2RH104	=1345B+1344B+R423+1343B+1340B+1349B+1359B+1360B.
2RH105	=1345D+1344D+1343D+R424+1342D+1340D+1349D+1359D+1360D.
2RH106	=1345D+1344D+1343D+R424+1342D+1339D+1335D+1334D+1333D+298D+297D+305D+794D +306D+307AD+244A+268A+269A+270A+267A+266A+265A.
2RH107	=265A+266A+267A+271A+273A+R128+619D+R186+R185+695C+658C+681C+804C.
2RH108	=1035D+1034D+1033D+R320+1033A+1029A+1028A+1027A+1037A+1038A+1039A+1040A +1041A+1042A+1043A+1044A.
2RH109	=1035E+1033E+R321+1033B+1029B+1028B+1027B+1037B+1038B+1039B+1040B+1041B +1042B+1043B+1044B.
2RH110	=433B+434B+435B+449G+450G+444B+443B.
2RH111	=443B+444B+445B+R179+606C+589C+579C+578C+577C+576C+575C+574C+573C+560C.
2RH112	=1345B+1344B+R423+1343B+1340B+1349B+1359B+1360B+1361B+1485B+1362B+R418 +1397A+1396A+1395A+1375A+1374A+1390A+R421+1341A+1340A+1339A+1338AE+1337E +1336E+R406+R400+1307A+1302A+1303A.
2RH113	=1345D+1344D+1343D+R424+1342D+1340D+1349D+1359D+1360D+1361D+1485D+1362D +R419+1399B+1398B+1402B+1395B+1375B+1374B+1390B+R422+1341C+1340C+1339C +1338FC+1337F+R407+R401+1307B+1301B+1302B+1303B.
2RH114	=247A+857FA+856F+263F+264F+265F+858F+863F+860F+861F+862FA+R131+625D+624D +627D+R192+688E+687E+686CE+667C+666C+665C+664C+663C+662C+661C+660C+691C +672C+804C.
2RH115	=1035D+1034D+1033D+R320+1033A+1029A+1028A+1027A+1037A+1038A+1039A+1040A +1041A+1042A+1043A+1044A+1045A+1046A+R303+R300+1004A+1005A+1006A+1007A +1013A+1014A+1012A.
2RH116	=1035E+1033E+R321+1033B+1029B+1028B+1027B+1037B+1038B+1039B+1040B+1041B +1042B+1043B+1044B+1047B+1045B+1046B+R304+R301+1004B+1005B+1008B+1009B +1010B+1011B+1012B.
2RH117	=433B+434B+435B+449G+450G+787G+451G+452G+R167+581D+580D+579D+578D+577D +576D+575D+574D+573D+560D.

Table E.2 Cable to Cable Routing Point Equations (Continued)

Cable	Routing
2RH118	=1345D+1344D+1343D+R424+1342D+1340D+1349D+1359D+1360D+1361D+1362D+R419 +R430+1427B+1421B+1422B+1423B+1428B.
2RH119	=1345D+1344D+1343D+R424+1342D+1340D+1349D+1359D+1360D+1361D+1362D+R419 +R430+1427B+1421B+1422B+1423B+1428B.
2RH120	=1345D+1344D+1343D+R424+1342D+1339D+1335D+1334D+1333D+298D+297D+305D+794D +306D+307AD+244A+268A+251A+250A+249A+248A+857FA+856F+263F+264F.
2RH121	=265F+858F+863F+860F+861F+862FA+R131+625D+624D+627D+R192+688E+687E+686CE +694C+676C+675C+674C+673C+672C+804C.
2RH122	=1035E+1033E+R321+1033B+1029B+1028B+1036B+R314+R333+1105B+1104B+1131B +1125B+1124B+1129B.
2RH123	=1035E+1033E+R321+1033B+1029B+1028B+1036B+R314+R333+1105B+1104B+1131B +1125B+1124B+1129B.
2RH124	=433B+434B+435B+449G+450G+444B+443B.
2RH125	=443B+444B+445B+R179+606C+589C+579C+578C+577C+576C+575C+574C+573C+560C.
2RH126	=1345D+1344D+1343D+R424+1342D+1340D+1349D+1359D+1360D+1361D+1362D+R419 +R430+1427B+1421B+1422B+1423B+1428B.
2RH127	=1345D+1344D+1343D+R424+1342D+1340D+1349D+1359D+1360D+1361D+1362D+R419 +R430+1427B+1421B+1422B+1423B+1428B.
2RH128	=1345D+1344D+1343D+R424+1342D+1339D+1335D+1334D+1333D+298D+297D+305D+794D +306D+307AD+244A+268A+251A+250A+249A+248A+857FA+856F+263F+264F.
2RH129	=265F+858F+863F+860F+861F+862FA+R131+625D+624D+627D+R192+688E+687E+686CE +694C+676C+675C+674C+673C+672C+804C.
2RH130	=1035E+1033E+R321+1033B+1029B+1028B+1036B+R314+R333+1105B+1104B+1131B +1125B+1124B+1129B.
2RH131	=1035E+1033E+R321+1033B+1029B+1028B+1036B+R314+R333+1105B+1104B+1131B +1125B+1124B+1129B.
2RH132	=1035E+1033E+R321+1033B+1029B+1028B+1036B+R314+1066B+1065B+1058B+1057B +1087B+1088B+1098B+572D+R166+426B+443B.
2RH133	=443B+425B+R178+605D+593D+594D+595D+596D+597D+598D.
2RH135	=1345D+1344D+1343D+R424+1342D+1340D+1349D+1359D.
2RH136	=1345D+1344D+1343D+R424+1342D+1339D+1335D+1334D+1333D+298D+297D+305D+794D +306D+307AD+244A+268A+269A+270A+267A+266A+265A.
2RH137	=265A+266A+267A+271A+273A+R128+619D+R186+R185+695C+658C+681C+804C.
2RH139	=1035E+1033E+R321+1033B+1029B+1028B+1027B+1037B+1038B+1039B+1040B+1041B +1042B+1043B.
2RH140	=443B+424B+425B+443B.
2RH141	=443B+425B+R178+605D+593D+594D+595D+596D+597D+598D.
2RH142	=1345B+1344B+1343B+R423+1343B+1340B+1349B+1359B+1360B+1361B+1485B+1362B +R418+1397A+1396A+1395A+1375A+1374A.
2RH143	=1345D+1344D+1343D+R424+1342D+1340D+1349D+1359D+1360D+1361D+1485D+1362D +R419+1399B+1398B+1402B+1395B+1375B+1374B+1373B.
2RH144	=1345D+1344D+1345D+R424+1342D+1339D+1335D+1334D+1333D+298D+297D+305D+794D +306D+307AD+244A+268A+269A+270A+267F+266F.

Table E.2 Cable to Cable Routing Point Equations (Continued)

Cable	Routing
2RH145	=858F+863F+860F+861F+862FA+R131+625D+624D+627D+R192+688E+687E+686CE+694C +676C+675C+674C+673C+672C.
2RH146	=1345B+1344B+R423+1343B+1340B+1349B+1359B+1360B+1361B+1485B+1362B+R418 +1397A+1396A+1395A+1376A+1377A+1378A+1379A+1380A+1381A+1382A+1385A.
2RH147	=1345D+1344D+1343D+R424+1342D+1340D+1349D+1359D+1368D+1352D+1353D+1354D +1355D+1356D+1357D+1358D+R416+1384B+1383B.
2RH148	=247A+857FA+856F+263F+264F+265F.
2RH149	=858F+863F+860F+861F+862FA+R131+625D+624D+627D+R192+688E+687E+686CE+694C +676C+675C+674C+673C+672C.
2RH150	=1345B+1344B+R423+1343B+1340B+1349B+1359B+1360B+1361B+1362B+R418+R429 +1427A+1421A+1422A+1423A+1428A+1431A+1432A+1433A+1434A.
2RH151	=1345D+1344D+R424+1342D+1340D+1349D+1359D+1360D+1361D+1362D+R419+R430 +1427B+1421B+1422B+1423B+1428B+1431B+1432B+1433B+1434B.
2RH152	=1345D+1344D+1343D+R424+1342D+1339D+1335D+1334D+1333D+298D+297D+305D+794D +306D+307AD+244A+268A+251A+250A+249A+248A+857FA+856F+263F+264F.
2RH153	=265F+858F+863F+860F+861F+862FA+R131+625D+624D+627D+R192+688E+687E+686CE +694C+676C+675C+674C+673C+672C+804C.
2RH154	=1034D+1033D+R320+1033A+1029A+1028A+1036A+R313+R332+1105A+1104A+1103A.
2RH155	=1035E+1033E+R321+1033B+1029B+1028B+1036B+R314+R333+1105B+1104B+1131B +1125B+1124B+1129B.
2RH156	=433B+424B+425B+443B.
2RH157	=443B+425B+R178+605D+593D+594D+595D+596D+597D.
2RH158	=1096A+1087A+1057A+1058A+1065A+1066A+R332+1105A+1104A+1103A.
2RH159	=1096B+1087B+1057B+1058B+1065B+1066B+R333+1105B+1104B+1131B+1125B+1124B +1129B.
2RH160	=1097B+1096B+1087B+1057B+1058B+1065B+1066B+R333+1105B+1104B+1131B+1125B +1124B+1129B+R324+1091F+1101F+582C+R196+581C+580C+589C+606C+R179+445B +444B+443B.
2RH161	=443B+444B+446B+447B+R168+581C+580C+579C+578C+577C+604C+597C+598C.
2RH162	=1035D+1034D+1033D+R320+1033A+1029A+1028A+1036A+R313+1066A+1065A+1059A +1060A+1061A+1062A+1078A+1079A+1074A+1084A.
2RH163	=1255A.
2RH164	=1035E+1033E+R321+1033B+1029B+1028B+1036B+R314+1066B+1065B+1059B+1060B +1061B+1062B+1078B+1079BD+1074D+1084D.
2RH165	=1255B.
2RH166	=1385A.
2RH167	=1385B.
2RH168	=247A+857FA+856F+263F+264F+265F.
2RH169	=858F+863F+860F+861F+862FA+R131+625D+624D+627D+R192+688E+687E+686CE+694C +676C+675C+674C+673C+672C.
2RH174	=1439E+1437E+R449+1436BE+1496B+1432B+1433B+1435B+R440+1384B+1386B+1383B +1381B+1380B+1379B+1378B+1377B+1376B+1375B+1374B+1373B.
2RH175	=1439E+1437E+R449+1436BE+1496B+1432B+1433B+1435B+R440+1384B+1386B+1383B +1381B+1380B+1379B+1378B+1377B+1376B+1375B+1374B+1373B.

Table E.2 Cable to Cable Routing Point Equations (Continued)

Cable	Routing
2RH176	=1386B+1385B+1383B+1384B+R416+1358D+1357D+1356D+1355D+1354D+1353D+1352D +1368D+1359D+1349D+1340D+1339D+1335D+1334D+1333D+298D+297D+305D+794D +306D+307AD+244A+268A+269A+270A+267F+266F.
2RH177	=858F+863F+860F+861F+862FA+R131+625D+624D+627D+R192+688E+687E+686CE+694C +676C+675C+674C+673C+672C.
2RH186	=304B+795AB+284A+285A+R120+286A+287A+288A+289A+R134+290A+R108+134A+136A +137A.
2RH190	=304D+303D+794D+793CD+283C+282C+281C+279C+278C+277C+276C+275AC+274A+R127 +R128+619D+R186+R185+695C+658C+681C.
2RH191	=301B+302B+303B+795AB+284A+285A+R120+286A+287A+288A+289A+R134+290A+R108 +134A+136A.
2RH195	=301D+302D+794D+793CD+283C+282C+281C+279C+278C+277C+276C+275AC+274A+R127 +R128+619D+R186+R185+695C+658C+681C.
2RH196	=478E+788AE+491A+492A+R176+493A+153A+154A+155A+R118+R112.
2RH200	=478F+788BF+491B+490B+489B+488B+487B+486B+485B+484B+483B+R162+481B+480B +479B+437B+436B+435B+434B+433B.
2RH201	=476E+477E+478E+788AE+491A+492A+R176+493A+153A+154A+155A+R118+R112.
2RH204	=433B+434B+435B+436B+437B+419B+420B+445B+446B+456F+455F+454F+R173+453F +1026B+1027B+1028B+1029B+1033B+R321+1033E+1035E.
2RH205	=475F+476F+477F+478F+788BF+491B+490B+489B+488B+487B+486B+485B+484B+483B +R162+481B+480B+479B+437B+436B+435B+434B+433B.
2RH215	=1035E+1033E+R321+1033B+1029B+1028B+1036B+R314+1066B+1065B+1058B+1057B.
2RH216	=1035E+1033E+R321+1033B+1029B+1028B+1027B+1026B+453F+R173+454F+455F+456F +446B+444B+443B.
2RH217	=443B+425B+R178+605D+593D+594D+595D+596D+597D+598D.
2RH231	=1096B+1087B+1057B+1058B+1065B+1066B+R314+1036B+1027B+1037B+1038B+1039B +1040B+1041B+1042B+1043B.
2RH232	=1096B+1088B+1098B+572D+R166+426B+425B+424B+443B.
2RH233	=443B+425B+R178+605D+593D+594D+595D+596D+597D+598D.
2RH234	=433B+424B+425B+443B+444B.
2RH235	=444B+443B+425B+R178+605D+593D+594D+595D+596D+597D+598D.
2RH236	=433B+424B+425B+426B+R166+572D+1098B+1088B+1087B+1057B+1058B+1065B+1066B +R314+1036B+1028B+1029B+1033B+R321+1033E+1035E.
2RH237	=433B+424B+425B+426B+R166+572D+1098B+1088B+1087B+1057B+1058B+1065B+1066B +R314+1036B+1028B+1029B+1033B+R321+1033E+1035E.
2RH255	=443B+444B+787G+456G+455G+454G+R165+572C+1068D+1069D+1086BD+1058B+1065B +1066B+R333+1105B+1104B+1131B+1125B+1124B+1129B.
2RH256	=443B+444B+787G+456G+455G+454G+R165+572C+1068D+1069D+1086BD+1058B+1065B +1066B+R333+1105B+1104B+1131B+1125B+1124B+1129B.
2RH257	=443B+R178+605D+593D+594D+595D+596D+597D.
2RH258	=443B+R178+605D+593D+594D+595D+596D+597D.
2RH259	=443B+426B+R166+572D+1098B+1088B+1087B+1057B+1086BD+1181D+1070D+1071D +1072D+1073D+1074D+1075D+1076D+1077D+R339+1120B+1119B.

Table E.2 Cable to Cable Routing Point Equations (Continued)

Cable	Routing
2RH268	=433B+434B+435B+436B+437B+419B+420B+R179+606C+589C+580C+581C+R196+582C +1101F+1091F+R324+1129B+1124B+1125B+1131B+1104B+1105B+R333+R314+1036B +1028B+1029B+1033B+R321+1033E+1035E.
2RH275	=265F+858F+863F+860F+861F+862FA+R131+625D+624D+623D+622D+621D+620D+1372C +1373C+1374C+1375CB+1402B+1398B+1399B+R430+1427B+1421B+1422B+1423B+1428B +1431B+1432B+1433B+1434B.
2RH276	=265A+266A+267A+271A+273A+R128+619D+R186+R185+695C+658C+681C+804C.
2RH277	=265A+266A+267A+271A+273A+R128+619D+R186+R185+695C+658C+681C+804C.
2RH281	=265A+266A+267A+271A+273A+R127+274A+275AC+276C+277C+278C+279C+281C.
2RH293	=443B+426B+R166+572D+1098B+1088B+1087B+1057B+1086BD+1181D+1070D+1071D +1072D+1073D+1074D+1075D+1076D+1077D+R339+1120B.
2RH304	=433B+424B+425B+443B.
2RH332	=433B+434B+435B+436B+437B+419B+420B+445B+446B+456F+455F+454F+R173+453F +1026B+1027B+1028B+1029B+1033B+R321+1033E+1035E.
2RH333	=247A+248A+249A+250A+251A+268A+244A+307AD+306D+794D+305D+297D+298D+1333D +1334D+1335D+1339D+1342D+R424+1343D+1344D+1345D.
2RH334	=172A+171A+170A+190AB+180B+189B+168B+167B+166B+314B+R110+134B+137B+138B.
2RH335	=172C+171C+170C+190CD+180D+189D+168D+167D+166D+314D+R111+134D+137D+138D.
2RH336	=/OMEGA.
2RH337	=172C+171C+170C+190CD+180D+189D+168D+167D+166D+314D+R111+134D+137D+138D.
2RH339	=172C+171C+170C+190CD+180D+189D+168D+167D+166D+314D+R111+134D+137D+138D.
2RH340	=172C+171C+170C+190CD+180D+189D+168D+167D+166D+314D+R111+134D+137D+138D.
2RH341	=172C+171C+170C+190CD+180D+189D+168D+167D+166D+314D+R111+134D+137D+138D.
2RH342	=118C+R102+118A+114A+115A+116A+117A+1721A+1720A+1719A+1718A+1717A+1716A +1726A+R528+1751A+R549+1885A+1823A+1822A+1821A+1820A+1819A+1818A+177A +176A+175A+174A+173A+172A+171A+170A+190AB+180B+189B+168B+167B+166B+314B +R110+134B+136B.
2RH343	=118D+R103+118B+114B+115B+116B+117B+1721BE+1720E+1719E+1718E+1717E+1726E +R530+1751D+R547+1884N+1883N+1851N+1850N+1873N+1862N+1861N+1860N+1859BN +222B+221B+199B+198B+R126+194BG+R133+186D+185D+184D+183D+182D+181D+180D +189D+168D+167D+166D+314D+R111+134D+136D+135D.
2RH344	=118D+R103+118B+114B+115B+116B+117B+1721BE+1720E+1719E+1718E+1717E+1726E +R530+1751D+R547+1884N+1883N+1851N+1850N+1873N+1862N+1861N+1860N+1859BN +222B+221B+199B+198B+R126+194BG+R133+186D+185D+184D+183D+182D+181D+180D +189D+168D+167D+166D+314D+R111+134D+136D+135D.
2RH346	=119D+118D+R103+118B+114B+115B+116B+117B+1721BE+1720E+1719E+1718E+1717E +1726E+R530+1751D+R547+1884N+1883N+1851N+1850N+1873N+1862N+1861N+1860N +1859BN+222B+221B+199B+198B+R126+194BG+R133+186D+185D+184D+183D+182D +181D+180D+189D+168D+167D+166D+314D+R111+134D+136D+135D.
2RH347	=/OMEGA.
2RH348	=119D+118D+R103+118B+114B+115B+116B+117B+1721BE+1720E+1719E+1718E+1717E +1726E+R530+1751D+R547+1884N+1883N+1851N+1850N+1873N+1862N+1861N+1860N +1859BN+222B+221B+199B+198B+R126+194BG+R133+186D+185D+184D+183D+182D +181D+180D+189D+168D+167D+166D+314D+R111+134D+136D+135D.

Table E.2 Cable to Cable Routing Point Equations (Continued)

Cable	Routing
2RH349	=119D+118D+R103+118B+114B+115B+116B+117B+1721BE+1720E+1719E+1718E+1717E +1726E+R530+1751D+R547+1884N+1883N+1851N+1850N+1873N+1862N+1861N+1860N +1859BN+222B+221B+199B+198B+R126+194BG+R133+186D+185D+184D+183D+182D +181D+180D+189D+168D+167D+166D+314D+R111+134D+136D+135D.
2RH350	=1035E+1033E+R321+1033B+1029B+1028B+1027B+1026B+453F+R173+454F+455F+456F +446B+445B+420B+419B+437B+436B+435B+434B+433B.
2RH351	=1035E+1033E+R321+1033B+1029B+1028B+1027B+1026B+453F+R173+454F+455F+456F +446B+445B+420B+419B+437B+436B+435B+434B+433B.
2RH374	=433B+424B+425B+426B+R166+572D+1098B+1088B+1087B+1057B+1058B+1065B+1066B +R314+1036B+1028B+1029B+1033B+R321+1033E+1035E.
2RH375	=247A+248A+249A+250A+251A+269A+270A+271A+273A+R127+274A+275AC+276C+277C +278C+279C+281C+282C+283C+793CD+794D+305D+297D+298D+1333D+1334D+1335D +1339D+1342D+R424+1343D+1344D+1345D.
2RH376	=433B+424B+425B+426B+R166+572D+1098B+1088B+1087B+1057B+1058B+1065B+1066B +R314+1036B+1028B+1029B+1033B+R321+1033B+R321+1033E+1035E.
2RH377	=433B+424B+425B+426B+R166+572D+1098B+1088B+1087B+1057B+1058B+1065B+1066B +R314+1036B+1028B+1029B+1033B+R321+1033E+1035E.
2RH378	=247A+248A+249A+250A+251A+268A+244A+R131+625D+624D+623D+622D+621D+620D +1372C+1373C+1374C+1375CB+1402B+1403B+1404B+1405B+1413B+1380B+1381B +1382B+1385B+1386B.
2RH379	=433B+424B+R178+605D+593D+594D+595D+596D+597D+598D.
2RH407	=283C+282C+281C+279C+278C+277C+276C+275AC+274A+R127+273A+271A+267A+266A +265A.
2RH408	=487B+486B+485B+484B+483B+R162+481B+480B+479B+437B+436B+435B+434B+433B.
2RH414	=433B+434B+435B+436B+437B+479B+480B+481B+R162+483B+484B+485B+486B+487B.
2RH415	=598D+597D+596D+595D+594D+593D+605D+R178+424B+433B.
2RH416	=487B+486B+485B+484B+483B+R162+481B+480B+479B+419B+420B+R179+606C+588C +587C+599C+593C+594C+595C+596C+597C+598C.
2RH424	=443B+444B+445B+420B+419B+479B+480B+481B+R162+483B+484B+485B+486B+487B +488B.
2RH425	=443B+444B+445B+420B+419B+479B+480B+481B+R162+483B+484B+485B+486B+487B +488B.
2RH426	=443B+444B+445B+420B+419B+479B+480B+481B+R162+483B+484B+485B+486B+487B +488B.
2RH431	=443B+444B+446B+456F+455F+454F+R173+453F+1026B+1027B+1028B+1029B+1033B +R321+1033E+1035E.
2RH432	=443B+444B+446B+456F+455F+454F+R173+453F+1026B+1027B+1028B+1029B+1033B +R321+1033E+1035E.
2RH433	=443B+444B+446B+456F+455F+454F+R173+453F+1026B+1027B+1028B+1029B+1033B +R321+1033E+1035E.
2RH434	=443B+444B+446B+456F+455F+454F+R173+453F+1026B+1027B+1028B+1029B+1033B +R321+1033E+1035E.
2RH435	=265A+266A+267A+271A+273A+R127+274A+275AC+276C+277C+278C+279C+281C+282C +283C+284C.

Table E.2 Cable to Cable Routing Point Equations (Continued)

Cable	Routing
2RH439	=264F+263F+856F+857FA+248A+249A+250A+251A+268A+244A+307AD+306D+794D+305D +297D+298D+1333D+1334D+1335D+1339D+1342D+R424+1343D+1344D+1345D.
2RH440	=264F+263F+856F+857FA+248A+249A+250A+251A+268A+244A+307AD+306D+794D+305D +297D+298D+1333D+1334D+1335D+1339D+1342D+R424+1343D+1344D+1345D.
2RH441	=264F+263F+856F+857FA+248A+249A+250A+251A+268A+244A+307AD+306D+794D+305D +297D+298D+1333D+1334D+1335D+1339D+1342D+R424+1343D+1344D+1345D.
2RH442	=264F+263F+856F+857FA+248A+249A+250A+251A+268A+244A+307AD+306D+794D+305D +297D+298D+1333D+1334D+1335D+1339D+1342D+R424+1343D+1344D+1345D.
2RH445	=478F+477F+476F+475F+797F+473F+482F+480F+458F+459F+457F+446B+444B+443B +425B+424B+433B.
2RH446	=475F+797F+473F+482F+480F+458F+459F+457F+446B+444B+443B+425B+424B+433B.
2RH613	=1345D+1344D+1343D+R424+1342D+1339D+1335D+1334D+1333D+298D+297D+305D+794D +306D+307AD+244A+268A+251A+250A+249A+248A+857FA+856F+263F+264F.
2RH614	=1035E+1033E+R321+1033B+1029B+1028B+1027B+1026B+453F+R173+454F+455F+456F +446B+444B+443B.
2RH649	=788BF+491B+490B+489B+488B+487B+486B+485B+484B+483B+R162+481B+480B+479B +437B+436B+435B+434B+433B.
2RH654	=433B+424B+R178+605D+593D+594D+595D+596D+597D+598D.
2RH655	=476F+475F+797F+473F+482F+480F+458F+459F+457F+446B+444B+443B+425B+424B +433B.
2RH656	=433B+424B+R178+605D+593D+594D+595D+596D+597D+598D.
2RH726	=1437E+R449+1436BE+1496B+1432B+1433B+1435B+R440+1384B+1383B.
2RI018	=1096B+1087B+1057B+1086BD+1181D+1070D+1071D+1072D+1073D+1084D.
2RI019	=1254B+1253B+1252B+R386+1266B+1267B+1268B+1269B+1270B.
2RI020	=443B+425B+424B+433B.
2RI021	=443B+425B+R178+605D+593D+594D+595D+596D+597D.
2RI027	=1328A+1329A+1330A+R403+1312A.
2RI028	=1328B+1329B+1331B+1332B+R404+1312B.
2RI029	=247A+857FA+856F+263F.
2RI030	=264F+265F+858F+863F+860F+861F+862FA+R131+625D+624D+627D+R192+688E+687E +686CE+667C+666C+665C+664C+663C+662C+661C+660C+691C+672C+804C.
2RI032	=1327B+1328B.
2RI033	=247A+857FA+856F+263F.
2RI034	=264F+265F+858F+863F+860F+861F+862FA+R131+625D+624D+627D+R192+688E+687E +686CE+667C+666C+665C+664C+663C+662C+661C+660C+691C+672C+804C.
2RI035	=1327A+1328A+1329A+1331A+1332A+R409+R412+1410A+1409A+1414A+1413A+1379A +1378A+1377A+1376A+1375A+1374A.
2RI036	=1327B+1328B+1329B+1331B+1332B+R410+R413+1410B+1409B+1414B+1413B+1379B +1378B+1377B+1376B+1375B+1374B+1373B.
2RI037	=247A+857FA+856F+263F.
2RI038	=264F+265F+858F+863F+860F+861F+862FA+R131+625D+624D+627D+R192+688E+687E +686CE+667C+666C+665C+664C+663C+662C+661C+660C+691C+672C+804C.
2RI041	=433B+434B+435B+436B+437B+419B+420B+445B+446B+456F+455F+454F+R173+453F +1026B+1027B+1036B+R314+1066B+1065B+1058B+1057B+1087B+1096B.

Table E.2 Cable to Cable Routing Point Equations (Continued)

Cable	Routing
2RI042	=310C+276C+275AC+274A+R127+273A+271A+270A+269A+251A+250A+249A+248A.
2RI044	=1327B+1328B.
2RI045	=247A+248A+249A+250A+251A+269A+270A+267A+266A+265A+264A.
2RI046	=264A+265A+266A+267A+270A+269A+268A+244A+R131+625D+R190+R189+689C+688C +687C+685C+684C+678C+677C+676C+675C+674C+673C+672C+804C.
2RI047	=1327B+1328B+1329B+1331B+1332B+R404+1312B+1311B+1310B.
2RI048	=1327B+1328B+1329B+1331B+1332B+R404+1312B+1311B+1310B.
2RI049	=247A+248A+249A+250A+251A+269A+270A+267A+266A+265A+264A.
2RI050	=264F+265F+858F+863F+860F+861F+862FA+R131+625D+624D+627D+R192+688E+687E +686CE+667C+666C+665C+664C+663C+662C+661C+660C+691C+672C+804C.
2RI055	=1328B+1329B+1331B+1332B+R404+1312B+1311B+1310B+1309B+1308B.
2RI056	=1328B+1329B+1331B+1332B+R404+1312B+1311B+1310B+1309B+1308B.
2RI057	=247A+857FA+856F+263F+264F+265F+858F+863F+860F+861F+862FA+R131+625D+624D +627D+R192+688E+687E+686CE+667C+666C+665C+664C+663C+662C+661C+660C+691C +672C.
2RI059	=247A+248A+249A+250A+251A+268A+244A+307AD+306D+794D+305D+297D+298D+1333D +1334D+1335D+1339D+1340D+1349D+1359D+1368D+1352D+1353D+1354D+1371D+1365D +1366D+1367D+R410+1332B+1331B+1329B+1328B+1326B.
2RI060	=247A+248A+249A+250A+251A+268A+244A+307AD+306D+794D+305D+297D+298D+1333D +1334D+1335D+1339D+1340D+1349D+1359D+1368D+1352D+1353D+1354D+1371D+1365D +1366D+1367D+R410+1332B+1331B+1329B+1328B+1326B.
2RI061	=247A+248A+249A+250A+251A+268A+244A+307AD+306D+794D+305D+297D+298D+1333D +1334D+1335D+1339D+1340D+1349D+1359D+1368D+1352D+1353D+1354D+1371D+1365D +1366D+1367D+R410+1332B+1331B+1329B+1328B+1326B.
2RI062	=247A+248A+249A+250A+251A+268A+244A+307AD+306D+794D+305D+297D+298D+1333D +1334D+1335D+1339D+1340D+1349D+1359D+1368D+1352D+1353D+1354D+1371D+1365D +1366D+1367D+R410+1332B+1331B+1329B+1328B+1326B.
2RI064	=1327B+1328B.
2RI065	=247A+857FA+856F+263F.
2RI066	=264F+265F+858F+863F+860F+861F+862FA+R131+625D+624D+627D+R192+688E+687E +686CE+667C+666C+665C+664C+663C+662C+661C+660C+691C+672C+804C.
2RI068	=1327B+1328B+1329B+1331B+1332B+R404+1312B.
2RI069	=247A+857FA+856F+263F+264F+265F+858F+863F+860F+861F+862FA+R131+625D+624D +627D+R192+688E+687E+686CE+667C+666C+665C+664C+663C+662C+661C+660C+691C +672C+804C.
2RI070	=247A+248A+249A+250A+251A+268A+244A+307AD+306D+794D+305D+297D+298D+1333D +1334D+1335D+1339D+1340D+1349D+1359D+1368D+1352D+1353D+1354D+1371D+1365D +1366D+1367D+R410+1332B+1331B+1329B+1328B+1326B.
2RI074	=1327B+1328B+1325B+1324B+1323B+1322B.
2RI075	=247A+857FA+856F+263F+264F+265F+858F+863F+860F+861F+862FA+R131+625D+624D +627D+R192+688E+687E+686CE+667C+666C+665C+664C+663C+662C+661C+660C+691C +672C+804C.

Table E.2 Cable to Cable Routing Point Equations (Continued)

Cable	Routing
2RI080	=1312B+R404+R410+R413+1410B+1409B+1414B+1413B+1379B+1378B+1377B+1376B +1375B+1374B+1373B+1372B+620C+621C+622C+623C+624C+R189+689C+688C+687C +685C+684C+678C+677C+676C+675C+674C+673C+672C+804C.
2RI081	=1312B+R404+R410+1367D+1366D+1365D+1364D+1363D+1485D+1361D+1360D+1359D +1349D+1340D+1339D+1335D+1334D+1333D+298D+297D+305D+794D+306D+307AD+244A +268A+269A+270A+267A+266A+265A+264A.
2RI082	=1312B+R404+R410+R413+1410B+1409B+1414B+1413B+1379B+1378B+1377B+1376B +1375B+1374B+1373B+1372B+620C+621C+622C+623C+624C+R189+689C+688C+687C +685C+684C+678C+677C+676C+675C+674C+673C+672C+804C.
2RI083	=1312B+R404+R410+1367D+1366D+1365D+1364D+1363D+1485D+1361D+1360D+1359D +1349D+1340D+1339D+1335D+1334D+1333D+298D+297D+305D+794D+306D+307AD+244A +268A+251A+250A+249A+248A+247A+246A.
2RI084	=247A+248A+249A+250A+251A+268A+244A+307AD+306D+794D+305D+297D+298D+1333D +1334D+1335D+1339D+1340D+1349D+1359D+1368D+1352D+1353D+1354D+1371D+1365D +1366D+1367D+R410+1332B+1331B+1329B+1328B+1326B.
2RI085	=247A+248A+249A+250A+251A+268A+244A+307AD+306D+794D+305D+297D+298D+1333D +1334D+1335D+1339D+1340D+1349D+1359D+1368D+1352D+1353D+1354D+1371D+1365D +1366D+1367D+R410+1332B+1331B+1329B+1328B+1326B.
2RI086	=804C+672C+691C+660C+661C+662C+663C+664C+665C+666C+667C+686CE+687E+688E +R192+627D+624D+625D+R131+862FA+861F+860F+863F+858F+265F+264F+263F+856F +857FA.
2RI088	=804C+672C+691C+660C+661C+662C+663C+664C+665C+666C+667C+686CE+687E+688E +R192+627D+624D+625D+R131+862FA+861F+860F+863F+858F+265F+264F.
2RI096	=247A+248A+249A+250A+251A+268A+244A+307AD+306D+793CD+284C+283C+833C+294C +295C+296C+297C+298C+1333C+1334C+1335C+1339C+1340C+1349C+1350C+1351C +1352C+1370CD+1364D+1365D+1366D+1367D+R410+1332B+1331B+1329B+1328B.
2RI097	=247A+248A+249A+250A+251A+268A+244A+307AD+306D+793CD+284C+283C+833C+294C +295C+296C+297C+298C+1333C+1334C+1335C+1339C+1340C+1349C+1350C+1351C +1352C+1370CD+1364D+1365D+1366D+1367D+R410+1332B+1331B+1329B+1328B.
2RI099	=1097B+1096B+1087B+1057B+1058B+1065B+1066B+R333+1105B+1104B+1131B+1125B +1124B+1129B+R324+1091F+582C+R196+581C+580C+589C+606C+R179+420B+419B +437B+436B+435B+434B+433B.
2RI100	=443B+426B+R166+572D+1098B+1096B+1087B+1057B+1086BD+1181D+1070D+1071D +1072D+1073D+1074D+1075D+1076D+1077D+R307+R304+R301+1004B.
2RI101	=443B+426B+R166+572D+1098B+1096B+1087B+1057B+1086BD+1181D+1070D+1071D +1072D+1073D+1074D+1075D+1076D+1077D+R307+R304+R301+1004B.
2RI102	=443B+426B+R166+572D+1098B+1088B+1087B+1086BD+1181D+1070D+1071D+1072D +1073D+1074D+1075D+1076D+1077D+R339+1120B+1119B.
2RI103	=443B+426B+R166+572D+1098B+1088B+1087B+1086BD+1181D+1070D+1071D+1072D +1073D+1074D+1075D+1076D+1077D+R339+1120B.
2RI104	=264A+265A+266A+267A+271A+273A+R127+274A+275AC+276C+277C+278C+279C+281C +282C+283C+793CD+794D+305D+297D+298D+1333D+1334D+1335D+1339D+1340D+1349D +1359D+1360D+1361D+1485D+1363D+1364D+1365D+1366D+1367D+R410+R404+1312B +1311B.

Table E.2 Cable to Cable Routing Point Equations (Continued)

Cable	Routing
2RI106	=264F+265F+858F+863F+860F+861F+862FA+R131+625D+624D+627D+R192+688E+687E +686CE+667C+666C+665C+664C+663C+662C+661C+660C+691C+672C+804C.
2RI107	=264A+265A+266A+267A+271A+273A+R127+274A+275AC+276C+277C+278C+279C+281C +282C+283C+793CD+794D+305D+297D+298D+1333D+1334D+1335D+1339D+1340D+1349D +1359D+1360D+1361D+1485D+1362D+R419+R430+1427B.
2RI109	=264F+265F+858F+863F+860F+861F+862FA+R131+625D+624D+627D+R192+688E+687E +686CE+667C+666C+665C+664C+663C+662C+661C+660C.
2RI110	=264A+265A+266A+267A+271A+273A+R127+274A+275AC+276C+277C+278C+279C+281C +282C+283C+793CD+794D+305D+297D+298D+1333D+1334D+1335D+1339D+1340D+1349D +1359D+1360D+1361D+1485D+1363D+1364D+1365D+1366D+1367D+R410+R404+1312B.
2RI112	=1328B+1329B+1331B+1332B+R410+1367D+1366D+1365D+1364D+1370CD+1352C+1351C +1350C+1349C+1340C+1339C+1335C+1334C+1333C+298C+297C+296C+295C+294C+833C +283C+284C+793CD+306D+307AD+244A+268A+251A+250A+249A+248A+247A.
2RI114	=1096B+1087B+1057B+1058B+1065B+1066B+R314+1036B+1027B+1026B+453F+R173 +454F+455F+456F+446B+445B+420B+419B+437B+436B+435B+434B+433B.
2RI116	=/OMEGA.
2RI127	=1096B+1087B+1057B+1086BD+1181D+1070D+1071D+1072D+1073D+1074D+1075D+1076D +1077D+R307+R304.
2RI130	=1311C+1312C+R405+R411+R414+1410D+1409D+1408D+1412D+1404D+1403D+1402D +1395D+1375D+1374D+1373D+1372D+620E+621E+622E+624E+R130+245C+244C+268C +251C+250C+249C+248C+247C.
2RI131	=248C+249C+250C+251C+269C+270C+273C+R129+R187+695A+658A+681A.
2RI132	=246C+247C+248C.
2RI133	=681A+658A+695A+R187+R129+273C+270C+269C+251C+250C+249C+248C+247C+246C.
2RI134	=247C+248C+249C+250C+251C+269C+270C+273C+R129+618E+616E+615E+614E+1391D +1392D+1393D+1396D+1402D+1403D+1404D+1412D+1408D+1409D+1410D+R414+R411 +R405+1312C.
2RI135	=246C+247C+248C+249C+250C+251C+269C+270C+273C+R129+R187+695A+658A+681A.
2RI136	=247C+248C+249C+250C+251C+269C+270C+273C+R129+618E+616E+615E+614E+1391D +1392D+1393D+1396D+1402D+1403D+1404D+1412D+1408D+1409D+1410D+R414+R411 +R405+1312C.
2RI138	=1311C+1312C+R405+R411+R414+1410D+1409D+1408D+1412D+1404D+1403D+1402D +1395D+1375D+1374D+1373D+1372D+620E+621E+622E+624E+R130+245C+244C+268C +251C+250C+249C+248C.
2RI139	=248C+249C+250C+251C+269C+270C+273C+R129+R187+695A+658A+681A.
2RI147	=1328B+1325B+1324B+1323B+1322B.
2RI148	=247A+857FA+856F+263F.
2RI150	=433B+425B+R178+605D+593D+594D+595D+596D+597D+598D.
2RI151	=433B+424B+425B+443B.
2RI157	=264A+265A+266A+267A+271A+273A+R127+274A+275AC+276C+310C.
2RI161	=264A+265A+266A+267A+270A+269A+268A+244A+307AD+306D+794D+305D+297D+298D +1333D+1334D+1335D+1339D+1340D+1349D+1359D+1360D+1361D+1485D+1363D+1364D +1365D+1366D+1367D+R410+R404+1312B+1311B.

Table E.2 Cable to Cable Routing Point Equations (Continued)

Cable	Routing
2RI174	=443B+425B+424B+434B+435B+436B+437B+479B+480B+481B+R162+483B+494B.
2RI175	=443B+425B+R178+605D+593D+594D+595D+596D+604D+576D+575D.
2RI176	=598D+597D+596D+595D+594D+593D+605D+R178+425B+443B.
2RI181	=1437E+R449+1436BE+1496B+1432B+1433B+1435B+R440+1384B+1383B.
2RI182	=1439E+1437E+R449+1436BE+1496B+1432B+1433B+1435B+R440+R416+1358D+1357D +1356D+1355D+1371D+1364D+1370CD+1352C+1351C+1350C+1349C+1340C+1339C +1335C+1334C+1333C+298C+297C+296C+295C+294C+833C+284C+793CD+306D+307AD +244A+268A+251A+250A+249A+248A+247A.
2RI183	=247A+857FA+856F+263F.
2RI184	=264F+265F+858F+863F+860F+861F+862FA+R131+625D+624D+627D+R192+688E+687E +686CE+667C+666C+665C+664C+663C+662C+661C+660C+691C+672C+804C.
2RI185	=1311C+1312C+R405+R411+R414+1410D+1409D+1408D+1412D+1404D+1403D+1402D +1395D+1375D+1374D+1373D+1372D+620E+621E+622E+624E+R130+245C+244C+268C +251C+250C+249C+248C.
2RI186	=248C+249C+250C+251C+269C+270C+273C+R129+R187+695A+657A+656A+655A+654A +653A+652A+650A.
2RI187	=247A+857FA+856F+263F.
2RI194	=433B+424B+425B+443B.
2RI196	=264F+265F+858F+863F+860F+861F+862FA+R131+625D+624D+627D+R192+688E+687E +686CE+667C+666C+665C+664C+663C+662C+661C+660C+691C+672C+804C.
2RI198	=1439E+1437E+R449+1436BE+1496B+1432B+1433B+1435B+R440+R416+1358D+1357D +1356D+1355D+1371D+1364D+1370CD+1352C+1351C+1350C+1349C+1340C+1339C +1335C+1334C+1333C+298C+297C+296C+295C+294C+833C+284C+793CD+306D+307AD +244A+268A+251A+250A+249A+248A+247A.
2RI240	=433B+424B+425B+443B.
2RI252	=247A+248A+249A+250A+251A+268A+244A+R131+625D+R190+R189+689C+688C+687C +685C+684C+678C+677C+676C+675C+674C+673C+672C+804C.
2RI255	=247A+857FA+856F+263F.
2RI256	=433B+424B+425B+443B.
2RI257	=263F+856F+857FA+247A.
2RI268	=247A.
2RI269	=263F+856F+857FA+247A.
2RI280	=804C+672C+673C+674C+675C+676C+677C+678C+684C+685C+687C+688C+689C+R189 +R190+625D+R131+862FA+861F+860F+863F+257A+263A+264A+265A.
2RI281	=264A+265A.
2RI282	=804C+672C+673C+674C+675C+676C+677C+678C+684C+685C+687C+688C+689C+R189 +R190+625D+R131+862FA+861F+860F+863F+858F+265F+264F.
2RI283	=804C+672C+673C+674C+675C+676C+677C+678C+684C+685C+687C+688C+689C+R189 +R190+625D+R131+862FA+861F+860F+863F+257A+263A+264A+265A.
2RI284	=264A+265A.
2RP054	=/OMEGA.
2RP056	=/OMEGA.
2RP058	=831F+832F.

Table E.2 Cable to Cable Routing Point Equations (Continued)

Cable	Routing
2RP060	=831F+832F.
2RP062	=805G+807G+808G+809G+810G+811G+812G+813G+814G.
2RP064	=805G+807G+808G+809G+810G+811G+812G+813G+814G.
2RP066	=835H+805H+807H+808H+809H+810H+811H+812H+813H+814H.
2RP068	=835H+805H+807H+808H+809H+810H+811H+812H+813H+814H.
2RP070	=822E+824E+825E+826E+827E+828E.
2RP070	=822E+824E+825E+826E+827E+828E.
2RP071	=831F+832F+822F+824F+825F+826F+827F+828F.
2RP071	=831F+832F+822F+824F+825F+826F+827F+828F.
2RP072	=805G+807G.
2RP072	=805G+807G.
2RP073	=835H+805H+807H.
2RP073	=835H+805H+807H.
2RP093	=309A+802A+402A+282A+283A.
2RP094	=/OMEGA.
2RP097	=489A+488A+487A+486A+485A.
2RP098	=/OMEGA.
2RP102	=616C+617C+618C+R186+619D+R128+273A+271A+267F+266F.
2RP103	=616C+617C+618C+R185+695C+658C+659C+660C+661C+662C+663C+664C+665C.
2RP109	=484B+483B+R162+481B+480B+479B+419B+420B+R179+606C+588C+587C.
2RP113	=484B+483B+R162+481B+480B+479B+419B+420B+445B.
2RP590	=/OMEGA.
2RP592	=/OMEGA.
2RP593	=/OMEGA.
2RP595	=/OMEGA.
2RR017	=278C+277C+276C+275AC+274A+R127+R128+619D+R186+R185+695C+658C+681C+672C +673C.
2RR025	=484B+483B+R162+481B+480B+479B+437B+436B+435B+434B+424B+R178+605D+593D +594D+595D+596D.
2RR086	=248A+249A+250A+251A+269A+270A+271A+273A+274A+275AC+276C+277C+278C+279C +281C+402C+292C+293C+1336F+1337F+1338FC+1339C+1340C+1350C+1351C+1352C +1370CD+1364D+1365D+1366D+1367D+R413+R437+1425B+1424B+1428B+1431B+1432B +1433B+1434B.
2RR087	=248A+249A+250A+251A+269A+270A+271A+273A+R127+274A+275AC+276C+277C+278C +279C+281C+402C+292C+293C+1336F+1337F+1338FC+1339C+1340C+1350C+1351C +1352C+1370CD+1364D+1365D+1366D+1367D+R413+R437+1425B+1424B+1423B+1422B +1421B.
2RR247	=673C+674C+675C+676C+677C+678C+684C+685C+687C+688C+689C+R189+R190+625D +R131+244A+268A+251A+250A+249A+248A.
2RR251	=596C+604C+577C+578C+579C+589C+606C+R179+420B+441B.
2RR273	=1122C+1115C+1114C+1113C+1130C+1104C+1105C+R334+1066C+1065C+1058C+1086C +1069C+1088C+1089C+1090C+1100C+582A+R197+581A+580A+579A+578A+577A+576A +575A+574A+573A+560A+543A+522A+628A+629A+630A+631A.

Table E.2 Cable to Cable Routing Point Equations (Continued)

Cable	Routing
2RR297	=441B+420B+445B+446B+447B+R168+582C+1101F+1091F+R324+1129B+1124B+1125B +1131B+1113B+1114B+1115B+1116B+1117B+1118B.
2RR298	=441B+420B+445B+446B+447B+R168+582C+1101F+1091F+R324+1129B+1124B+1125B +1131B+1113B+1114B+1115B+1116B+1117B+1118B+1119B.
2RR329	=1371D+1364D+1363D+1362D+R419+1399B+1398B+1402B+1395B+1375B+1374B+1373B +1372B+620C+621C+622C+623C+624C+R189+689C+688C+687C+685C+684C+683C+803C +699C.
2RT028	=1437E+R449+1436BE+1496B+1431B+1428B+1423B+1422B+1421B+1420B+1419B.
2RT029	=1437E+R449+1436BE+1496B+1431B+1428B+1423B+1422B+1421B+1420B+1419B.
2RT030	=1386B+1385B+1383B+1384B+R416+1358D+1357D+1356D+1355D+1354D+1353D+1352D +1368D+1359D+1349D+1340D+1339D+1335D+1334D+1333D+298D+297D+305D+794D +306D+307AD+244A+268A+269A+270A+267F+266F.
2RT031	=858F+863F+860F+861F+862FA+R131+625D+624D+627D+R192+688E+687E+686CE+694C +676C+675C+674C+673C.
2SA010	=179B+180B+181B+182B+183B+184B+185B+175B+176B+177B+1818B+1819B+1820B +1821B+1822B+1823B+1824B+1825B+1826B+1894B+1895B+1914B+1915B.
2SA011	=180D+181D+R124+192D+R125+342B+344B+345B+346B+R150+549E+548E+547E+560E +561E+562E+781E.
2SA012	=180D+181D+R124+192D+R125+342B+344B+345B+346B+R150+549E+548E+547E+560E +561E+562E+563E.
2SA015	=179D+180D+181D+182D+183D+184D+185D+186D+R133+187D+188D+1836D+1837D+1838D +1839D+1840D+1841CD+1827C+1894F+1895F+1914F+1915F.
2SA017	=/OMEGA.
2SA035	=/OMEGA.
2SA036	=/OMEGA.
2SA037	=/OMEGA.
2SA038	=1915F+1914F+1895F+1894F+1827F+1828F+1829F+1830F+1831F+1832F+1833F+1834F +1835F+1902F+1901F.
2SA050	=781F+562F+540F+R159+374CD+414C+410C+390C+403C.
2SA051	=1915F+1914F+1895F+1894F+1827F+1841F+1840F+1839F+1838F+1837F+1836F+188F +187F+195BF+215B+214B+213B+234B+233B+232B.
2SC010	=1407E+1401E+R432+1401A+1400A+1404A+1405A+1414A+1409A+1410A+R436+R445 +R468+1483A+1482A+1481A+1480A+1479A.
2SC012	=1407F+1401F+R433+1401B+1400B+1403B+1402B+1395B+1375B+1374B+1373B+1372B +620C+621C+622C+623C+624C+R189+689C+688C+687C+685C+684C+678C+677C+676C +675C+674C.
2SC018	=1096A+1087A+1057A+1058A+1059A+1060A+1061A+1062A+1063A+1064A+R335+R346 +R367+1172A+1173A+1174A+1175A.
2SC020	=1096B+1088B+1098B+572D+571D+570D+569D+590D+591D+592D+593D+594D+595D.
2SC023	=595A+594A+593A+592A+591A+590A+569A+570A+571A+R194+572A+1056C+1057C+1058C +1059C+1060C+1061C+1062C+1063C+1064C+R337+R348+R369+1172C+1173C+1174C +1175C.
2SC024	=1407E+1401E+R432+1401A+1400A+1404A+1405A+1414A+1409A+1410A+R436+R445 +R468+1483A+1482A+1481A+1480A+1479A.

Table E.2 Cable to Cable Routing Point Equations (Continued)

Cable	Routing
2SC025	=1407F+1401F+R433+1401B+1400B+1404B+1405B+1414B+1409B+1410B+R437+R446 +R469+1483B+1482B+1481B+1480B+1479B.
2SC028	=1407F+1401F+R433+1401B+1400B+1404B+1405B+1414B+1409B+1410B+R437+R446 +R469+1483B+1482B+1481B+1480B+1479B.
2SC029	=1407F+1401F+R433+1401B+1400B+1404B+1405B+1414B+1409B+1410B+R437+R446 +R469+1483B+1482B+1481B+1480B+1479B.
2SC030	=1407F+1401F+R433+1401B+1400B+1404B+1405B+1414B+1409B+1410B+R437+R446 +R469+1483B+1482B+1481B+1480B+1479B.
2SC031	=1096B+1087B+1057B+1058B+1059B+1060B+1061B+1062B+1063B+1064B+R336+R347 +R368+R394+1172B+1173B+1174B.
2SC032	=1096B+1087B+1057B+1058B+1059B+1060B+1061B+1062B+1063B+1064B+R336+R347 +R368+R394+1172B+1173B+1174B.
2SC033	=1096B+1087B+1057B+1058B+1059B+1060B+1061B+1062B+1063B+1064B+R336+R347 +R368+R394+1172B+1173B.
2SC039	=1407F+1401F+R433+1401B+1400B+1403B+1402B+1395B+1375B+1374B+1373B+1372B +620C+621C+622C+623C+624C+R189+689C+688C+687C+685C+684C+678C+677C+676C +675C+674C.
2SC040	=1096B+1088B+1098B+572D+571D+570D+569D+590D+591D+592D+593D+594D+595D.
2SC041	=1479B+1480B+1481B+1482B+1483B+R469+R446+1425B+1424B+1423B+1422B+1421B +1420B+1426B+R428+1394C+1393C+1392C+1391C+614D+615D+616D+617D+626DF+627F +R191+692C+691C+673C+674C+675C.
2SC042	=/OMEGA.
2SC043	=1173B+1172B+R394+R368+R347+R336+1064B+1063B+1062B+1061B+1060B+1059B +1058B+1086BD+1069D+1068D+572C+R195+571C+570C+569C+590C+591C+592C+593C +594C+595C.
2SC044	=1175B+1174B.
2SC046	=1407F+1401F+R433+1401B+1400B+1403B+1402B+1395B+1375B+1374B+1373B+1372B +620C+621C+622C+623C+624C+R189+689C+688C+687C+685C+684C+678C+677C+676C +675C+674C.
2SC047	=1096B+1088B+1098B+572D+571D+570D+569D+590D+591D+592D+593D+594D+595D.
2SC050	=1479C+1480C+1481C+1482C+1483C+R470+R447+R438+1410D+1409D+1408D+1412D +1404D+1403D+1402D+1396D+1393D+1392D+1391D+614E+615E+616E+618E+R187+695A +658A+659A+660A+661A+662A+693A+675A.
2VD010	=309A+802A+402A+281A+279A+278A+277A.
2VD012	=492A+R176+493A+153A+154A+155A+R118+156A+157A+162A+163A+R116+322A.
2VD013	=492B+R177+493B+153B+154B+155B+R119+156B+157B+162B+163B+R117+322B.
2VD014	=125A+126A+127A+128A+130A+131A+132A+R106+144A+145A+146A+147A+R114+318A.
2VD015	=125B+126B+127B+128B+130B+131B+132B+R107+144B+145B+146B+147B+R115+318B.
2VD035	=322B+R117+163B+162B+158B+160B.
2VD036	=/OMEGA.
2VD037	=R119+156B+157B+162B+163B+R117+322B.
2VD039	=318B+R115+147B+146B+145B+144B+R107+132B+131B+130B+128B+127B+123B+124B.
2VD040	=318B+R115+147B.

Table E.2 Cable to Cable Routing Point Equations (Continued)

Cable	Routing
2VD041	=318B+R115+147B+146B+145B.
2VD053	=309C+802C+402C+281C+279C+278C+277C+276C+275AC+274A+R127+273A+271A+270A +258A+257A+256A+255A+254A+253A+252A.
2VD059	=492B+R177+493B+153B+154B+155B+R119+156B+157B+162B+163B+R117+322B.
2VD062	=/OMEGA.
2VD063	=/OMEGA.
2VD064	=/OMEGA.
2VD065	=125B+126B+127B+128B+130B+131B+132B+R107+144B+145B+146B+147B+R115+318B.
2VD068	=/OMEGA.
2VD069	=/OMEGA.
2VD070	=/OMEGA.
2VD077	=309C+802C+402C+281C+279C+278C+277C+276C+275AC+274A+R127+273A+271A+270A +258A+257A+256A+255A+254A+253A+252A.
2VD121	=/OMEGA.
2VD122	=/OMEGA.
2VD123	=R111.
2VD124	=R111.
2VD125	=/OMEGA.
2VD126	=/OMEGA.
2VD130	=/OMEGA.
2VD131	=/OMEGA.
2VD133	=/OMEGA.
2VD150	=/OMEGA.
2VD152	=/OMEGA.
2VD153	=/OMEGA.
2VD154	=/OMEGA.
2VD155	=/OMEGA.
2VD156	=/OMEGA.
2VD157	=/OMEGA.
2VD158	=/OMEGA.
2VD159	=/OMEGA.
2VD160	=/OMEGA.
2VD162	=/OMEGA.
2VD164	=/OMEGA.
2VD165	=/OMEGA.
2VD166	=/OMEGA.
2VD167	=/OMEGA.
2VD168	=/OMEGA.
2VD169	=/OMEGA.
2VD170	=/OMEGA.
2VD171	=/OMEGA.
2VD172	=/OMEGA.
2VD173	=/OMEGA.

Table E.2 Cable to Cable Routing Point Equations (Continued)

Cable	Routing
2VD180	=/OMEGA.
2VD181	=/OMEGA.
2VD182	=/OMEGA.
2VD185	=/OMEGA.
2VD186	=/OMEGA.
2VD187	=/OMEGA.
2VD188	=/OMEGA.
2VD189	=/OMEGA.
2VD190	=/OMEGA.
2VD191	=/OMEGA.
2VQ047	=1096B+1087B+1057B+1058B+1065B+1066B+R333+R344+1143B+1142B+1135B+1134B.
2VQ048	=1096B+1087B+1057B+1058B+1065B+1066B+R333+R344+1143B+1142B+1135B+1134B.
2VQ049	=1096B+1088B+1098B+572D+571D+570D+569D+568D+567D+566D.
2VQ053	=1407F+1401F+R433+1401B+1400B+1403B+1398B+1399B+R430+1427B+1420B+1419B +1418B+R443+1445B+1442B+1443B+1444B+R459.
2VQ054	=1407F+1401F+R433+1401B+1400B+1403B+1398B+1399B+R430+1427B+1420B+1419B +1418B+R443+1445B+1442B+1443B+1444B+R459.
2VQ055	=1408F+1411F+R435+1411B+1414B+1413B+1379B+1378B+1377B+1376B+1375B+1374B +1373B+1372B+620C+621C+622C+623C+624C+R189+688C+687C+685C+684C+683C+803C +700C.
2VQ084	=1407F+1401F+R433+1401B+1400B+1403B+1398B+1399B+R430+1427B+1420B+1419B +1418B+R443+1445B+1441B.
2VQ085	=1407F+1401F+R433+1401B+1400B+1403B+1398B+1399B+R430+1427B+1420B+1419B +1418B+R443+1445B+1441B.
2VQ086	=1407F+1401F+R433+1401B+1400B+1403B+1402B+1395B+1375B+1374B+1373B+1372B +620C+621C+622C+623C+624C+R189+689C+688C+687C+685C+684C+683C+803C+700C.
2VQ136	=566C+567C+568C+569C+583C+584C+585C+586C+587C+588C+606C+R179+445B.
2VQ138	=700C+803C+683C+678C+677C+694C+686CE+687E+688E+R192+627D+624D+625D+R131 +862FA+861F+860F+863F+858F+266F.
2VQ154	=1097B+1096B+1088B+1098B+572D+R166+426B+443B+444B.
2VQ156	=1408F+1411F+R435+1411B+1414B+1405B+1404B+1403B+1402B+1375CB+1374C+1373C +1372C+620D+621D+622D+623D+624D+625D+R131+244A+268A+269A+270A+267A+266A.
2VY010	=1345B+1344B+R423+1343B+1339B+1335B+1334B+1333B+298B+297B+305B+303B+795AB +283A+282A+402A+292A+293A+R406+1314A+1316A+1317A+1318A+1319A.
2VY011	=1344D+1343D+R424+1342D+1339D+1338FC+1337F+R407+1314B.
2VY012	=1034D+1033D+R320+1033A+1029A+1028A+1027A+1037A+1038A+1039A+1040A+1041A +1042A+1043A+1044A+1045A+1046A+R303+1016A+1017A+1019A+1020A+1021A.
2VY013	=1035E+1034E+1033E+R321+1033B+1029B+1028B+1027B+1037B+1038B+1039B+1040B +1041B+1042B+1043B+1044B+1045B+1046B+R304+1016B+1017B+1022B.
2VY016	=1344B+R423+1343B+1340B+1349B+1359B+1360B+1361B+1485B+1363B+1370AB+1352A +1351A+1350A+1349A+1340A+1339A+1338AE+1337E+1336E+R406+1314A+1316A+1317A +1318A+1319A+1497A.

Table E.2 Cable to Cable Routing Point Equations (Continued)

Cable	Routing
2VY017	=1344D+1343D+R424+1342D+1340D+1349D+1359D+1360D+1361D+1485D+1363D+13
	+1365D+1366D+1367D+R410+1332B+1331B+1329B+1325B+1324B.
2VY018	=120A+1003A+1002A+1001A+1000A.
2VY019	=120B+1003B+1002B+1001B+1000B.
2VY044	=1314B+R401+1307B+1301B+1302B.
2VY045	=1314B+R407+1336F+293C+292C+402C+282C+283C.
2VY046	=1022B+1017B+1016B+R301+1004B+1005B+1008B+1009B+1010B+1011B.
2VY047	=1022B+1017B+1016B+R304+1046B+1045B+1047B+1044B+1043B+1042B+1041B+1(
	+1039B+1038B+1037B+1026B+453F+R173+454F+455F+456F+457F+459F+458F+4
	+482F+473F+797F+475F+476F+477F+478F+788BF+491B+490B+489B+488B.
2VY048	=1022B+1017B+1016B+R304+1046B+1045B+1047B+1044B+1043B+1042B+1041B+1
	+1039B+1038B+1037B+1026B+453F+R173+454F+455F+456F+457F+459F+458F+4
	+482F+473F+797F+475F+476F+477F+478F+788BF+491B+490B+489B+488B.
2VY049	=1324B+1325B+1329B+1331B+1332B+R404+1312B.
2VY050	=1324B+1325B+1329B+1331B+R410+1367D+1366D+1365D+1364D+1370CD+1352C+
	+1350C+1349C+1340C+1339C+1335C+1334C+1333C+298C+297C+296C+295C+294
	+284C+283C.
2VY051	=1324B+1325B+1329B+1331B+1332B+R404+1312B.
2VY052	=1000B+1001B.
2VY053	=1000B+1001B+1002B+1003B+120B+125B+126B+123B+124B.
2VY077	=1324B+1325B+1329B+1331B+1332B+R410+R413+1410B+1409B+1414B+1413B+1
	+1381B+1382B.
2VY102	=1344D+1343D+R424+1342D+1340D+1349D+1359D+1360D+1361D+1485D+1362D+
	+1399B+1398B+1402B+1395B+1375B+1374B+1390B+R422+1341C+1340C+1339C
	+1337F+R407+1314B.
2VY103	=1035E+1033E+R321+1033B+1029B+1028B+1027B+1037B+1038B+1039B+1040B+
	+1042B+1043B+1044B+1047B+1045B+1046B+R304+1016B+1017B+1022B.
2VY104	=1344D+1343D+R424+1342D+1340D+1349D+1359D+1360D+1361D+1485D+1363D+
	+1365D+1366D+1367D+R410+1332B+1331B+1329B+1325B+1324B.
2WR010	=1451A+1450A+R461+1465A.
2WR011	=247A+857FA+856F+263F+264F+265F+858F+863F+860F+861F+862FA+R131+62
	+627D+R192+688E+687E+686CE+694C+677C+678C+683C+803C+699C+T36.
2WR013	=1144D+R360+1162A+1155A+1154A+1153A+1163A+R357+1140A.
2WR014	=1146E+1144E+R361+1162B+1154B+1153B+1152B+1151B+1150B+R347+R336+1
	+1063B+1062B+1061B+1060B+1059B+1058B+1057B+1087B+1088B+1098B+572
	+570D+569D+568D+567D+783D+782D+781D.
2WR015	=1146E+1144E+R361+1162B+1154B+1153B+1152B+1151B+1150B+R347+R336+1
	+1063B+1062B+1061B+1060B+1059B+1058B+1057B+1087B+1088B+1098B+57
	+570D+569D+568D+567D+566D+565D+564D+563D.
2WR033	=1451B+1450B+R462+1465B+1466B+1467B+1468B+1469B+R446+R437+1410B+
	+1414B+1413B+1379B+1378B+1377B+1376B+1375B+1374B+1373B+1372B+62
	+622C+623C+624C+R190+625D+R131+244A+268A+251A+250A+249A+248A+24

Table E.2 Cable to Cable Routing Point Equations (Concluded)

Cable	Routing
2WR034	=1451B+1450B+R462+1465B+1466B+1467B+1468B+1469B+R446+R437+1410B+1409B +1414B+1413B+1379B+1378B+1377B+1376B+1375B+1374B+1373B+1372B+620C+621C +622C+623C+624C+R190+625D+R131+244A+268A+251A+250A+249A+248A+247A.
2WS010	=189B+168B+167B+166B+165B+164B+1979B+1980B+1981B+1986B+R578+62A+63A+68A +70A.
2WS011	=180D+179D+178D+R123+340B+R137+536F+535F+534F+621F+533F+528F+527F+526F +525F+524F+547F+560F+561F+562F+781F.
2WS012	=179D+178D+R123+340B+R137+536F+535F+534F+621F+533F+528F+527F+526F+525F +524F+547F+560F+561F+562F+563F.
2WS013	=335A+336A+337A+338A+R140+512A+508A+507A+506A+505A+504A+2061AB+2060B +2059B+2058B+2057B+2056B+2104B+R581+1989B+1984B+1983B+1982B+1986B+R578 +62A+63A.
2WS014	=341B+R139+530E+529E+528E+527E+526E+525E+524E+547E+560E+561E+562E+781E.
2WS015	=341B+R139+530E+529E+528E+527E+526E+525E+524E+547E+560E+561E+562E+563E.
2WS016	=1082B+1081B+1080B+1079BD+1075D+1076D+1077D+R307+1046B+1045B+1047B.
2WS019	=180B+189B+168B+167B+166B+165B+164B+1979B+1980B+1981B+1986B+R578+62A+63A +68A+70A+71A+73A.
2WS020	=180D+179D+178D+R123+340B+R137+536F+535F+534F+621F+533F+528F+527F+526F +525F+524F+547F+560F+561F+562F+563F.
2WS021	=180D+179D+178D+R123+340B+R137+536F+535F+534F+621F+533F+528F+527F+526F +525F+524F+547F+560F+561F+562F+781F.
2WS042	=2008D+2007D+R555+1853C+1852CG+1851G+1850G+1849G+1848G+1871G+R543+366C +365C+349C+R158+R159+540F+562F+781F.
2WS094	=1082B+1081B+1080B+1078B+1062B+1061B+1060B+1059B+1065B+1066B+R314+1036B +1027B+1037B+1038B+1039B+1040B+1041B+1042B+1043B+1044B.
2WS095	=1082B+1081B+1080B+1079BD+1074D+1073D+1072D+1071D+1070D+1181D+1069D+1068D +572C+R195+571C+570C+569C+568C+567C+783C+782C.
2WS101	=2009D+2008D+2007D+R555+1853C+1828C+1827C+1826C+1825C+1824C+1823C.
2WS102	=2009D+2007D+R555+1853C+1852CG+1851G+1850G+1849G+1848G+1871G+R543+366C +365C+349C+R158+R159+540F+562F+781F.
2WT010	=1891D+1886D+R550+1886B+1825B+1826B+1894B+1895B+1896B+1897B+1899B+R557 +2139A.
2WT011	=1891E+1889E+R552+1889C+1826C+1827C+1828C+1853C+R555+R583+2007B+2006B +2005B+2021B+2014B+2013B+2012B+2011B+2010B+511B+556B+557BG+524G+523EG +543E+561E+562E+781E.
2WT013	=2144D+2143D+2147D+R591+2147A+2140A.
2WT014	=2144E+2143E+2142E+2141E+2146E+R588+R590+2179B+2158B+2159B+2164B+2165B +2166B+2171B+2020B+2019B+2021B+2014B+2013B+2012B+2011B+2010B+511B+556B +557BG+524G+523EG+543E+561E+562E+781E.
2WT025	=2206E+2204E+R629+2204B+2203B+1756B+1783B+1784B+1785B+1786B+1787B+1802B +R532+1912F+1911F.
2WT026	=2206D+2204D+R628+2204A+2203A+1756A+1783A+1784A+1785A+1786A+1787A+1802A +R531+1913B+1912B+1911B.

Table E.3 Cable Routing Points to Location Mapping

Routing Pt	Location	Routing Pt	Location	Routing Pt	Location	Routing Pt	Location
1000A	LOC-3I1	1016C	LOC-3H1	1029A	LOC-3G-1	1043A	LOC-3G-1
1000B	LOC-3I1	1017A	LOC-3H1	1029B	LOC-3G-1	1043B	LOC-3G-1
1001A	LOC-3I2	1017B	LOC-3H1	1029C	LOC-3G-1	1043C	LOC-3G-1
1001B	LOC-3I2	1017C	LOC-3H1	102A	LOC-4E2-1	1044A	LOC-3G-1
1002A	LOC-3I2	1018A	LOC-3H1	1030A	LOC-3G-1	1044B	LOC-3G-1
1002B	LOC-3I2	1018B	LOC-3H1	1030B	LOC-3G-1	1044C	LOC-3G-1
1003A	LOC-3I2	1018C	LOC-3H1	1031A	LOC-3G-1	1045A	LOC-3G-1
1003B	LOC-3I2	1019A	LOC-3H1	1031B	LOC-3G-1	1045B	LOC-3G-1
1004A	LOC-3I1	1019B	LOC-3H1	1032A	LOC-3G-1	1045C	LOC-3G-1
1004B	LOC-3I1	1019C	LOC-3H1	1032B	LOC-3G-1	1046A	LOC-3G-1
1004C	LOC-3I1	101E	LOC-4F3	1033A	LOC-3G-1	1046B	LOC-3G-1
1005A	LOC-3I1	1020A	LOC-3H1	1033B	LOC-3G-1	1046C	LOC-3G-1
1005B	LOC-3I1	1020B	LOC-3H1	1033D	LOC-3G-1	1047B	LOC-3G-1
1005C	LOC-3I1	1020C	LOC-3H1	1033E	LOC-3G-1	1047C	LOC-3G-1
1006A	LOC-3I1	1021A	LOC-3H1	1034D	LOC-3G-1	1048B	LOC-3G-1
1006B	LOC-3I1	1021B	LOC-3H1	1034E	LOC-3G-1	1049C	LOC-3G-1
1006C	LOC-3I1	1021C	LOC-3H1	1035D	LOC-3G-1	1049D	LOC-3G-1
1007A	LOC-3I1	1022A	LOC-3H3	1035E	LOC-3G-1	104A	LOC-6E
1008B	LOC-3I1	1022B	LOC-3H3	1036A	LOC-3G-1	104B	LOC-6E
1008C	LOC-3I1	1022C	LOC-3H3	1036B	LOC-3G-1	1050A	LOC-3G-3
1009B	LOC-3I3	1023A	LOC-3H3	1036C	LOC-3G-1	1050B	LOC-3G-3
1009C	LOC-3I3	1023B	LOC-3H3	1037A	LOC-3G-1	1051A	LOC-3G-1
100E	LOC-4F3	1023C	LOC-3H3	1037B	LOC-3G-1	1051B	LOC-3G-1
1010B	LOC-3I3	1024A	LOC-3H3	1038A	LOC-3G-1	1052A	LOC-3G-1
1010C	LOC-3I3	1024B	LOC-3H3	1038B	LOC-3G-1	1053A	LOC-3G-1
1011A	LOC-3I3	1024C	LOC-3H3	1039A	LOC-3G-1	1053B	LOC-3G-1
1011B	LOC-3I3	1025A	LOC-3H3	1039B	LOC-3G-1	1054A	LOC-3G-1
1011C	LOC-3I3	1025B	LOC-3H3	103A	LOC-4E2-1	1054B	LOC-3G-1
1012A	LOC-3I3	1025C	LOC-3H3	1040A	LOC-3G-1	1055R	LOC-3G-3
1012B	LOC-3I3	1026A	LOC-3G-1	1040B	LOC-3G-1	1056C	LOC-3F-2
1012C	LOC-3I3	1026B	LOC-3G-1	1040C	LOC-3G-1	1057A	LOC-3F-2
1013A	LOC-3I3	1027A	LOC-3G-1	1041A	LOC-3G-1	1057B	LOC-3F-2
1014A	LOC-3I3	1027B	LOC-3G-1	1041B	LOC-3G-1	1057C	LOC-3F-2
1015A	LOC-3I3	1028A	LOC-3G-1	1042A	LOC-3G-1	1058A	LOC-3F-2
1016A	LOC-3H1	1028B	LOC-3G-1	1042B	LOC-3G-1	1058B	LOC-3F-2
1016B	LOC-3H1	1028C	LOC-3G-1	1042C	LOC-3G-1	1058C	LOC-3F-2

Table E.3 Cable Routing Points to Location Mapping (Continued)

Routing Pt	Location	Routing Pt	Location	Routing Pt	Location	Routing Pt	Location
1059A	LOC-3F-2	1070C	LOC-3F-2	1082B	LOC-3F-1	109A	LOC-6E
1059B	LOC-3F-2	1070D	LOC-3F-2	1083A	LOC-3F-1	109B	LOC-6E
1059C	LOC-3F-2	1071A	LOC-3F-2	1083B	LOC-3F-1	1100C	LOC-3F-2
105A	LOC-6E	1071C	LOC-3F-2	1084A	LOC-3F-1	1101F	LOC-3F-2
105B	LOC-6E	1071D	LOC-3F-2	1084D	LOC-3F-1	1102B	LOC-3F-2
1060A	LOC-3F-2	1072A	LOC-3F-2	1085A	LOC-3F-2	1103A	LOC-3E
1060B	LOC-3F-2	1072C	LOC-3F-2	1085C	LOC-3F-2	1104A	LOC-3E
1060C	LOC-3F-2	1072D	LOC-3F-2	1085D	LOC-3F-2	1104B	LOC-3E
1061A	LOC-3F-1	1073A	LOC-3F-1	1086A	LOC-3F-2	1104C	LOC-3E
1061B	LOC-3F-1	1073C	LOC-3F-1	1086BD	LOC-3F-2	1105A	LOC-3E
1061C	LOC-3F-1	1073D	LOC-3F-1	1086C	LOC-3F-2	1105B	LOC-3E
1062A	LOC-3F-1	1074A	LOC-3F-1	1087A	LOC-3F-2	1105C	LOC-3E
1062B	LOC-3F-1	1074C	LOC-3F-1	1087B	LOC-3F-2	1106A	LOC-3E
1062C	LOC-3F-1	1074D	LOC-3F-1	1088A	LOC-3F-2	1106B	LOC-3E
1063A	LOC-3F-1	1075A	LOC-3F-1	1088B	LOC-3F-2	1106C	LOC-3E
1063B	LOC-3F-1	1075C	LOC-3F-1	1088C	LOC-3F-2	1107A	LOC-3E
1063C	LOC-3F-1	1075D	LOC-3F-1	1089C	LOC-3F-2	1107B	LOC-3E
1064A	LOC-3F-1	1076A	LOC-3F-1	108A	LOC-6E	1107C	LOC-3E
1064B	LOC-3F-1	1076C	LOC-3F-1	108B	LOC-6E	1108A	LOC-3E
1064C	LOC-3F-1	1076D	LOC-3F-1	1090C	LOC-3F-2	1108B	LOC-3E
1065A	LOC-3F-2	1077A	LOC-3F-1	1091F	LOC-3F-2	1108C	LOC-3E
1065B	LOC-3F-2	1077C	LOC-3F-1	1092B	LOC-3F-2	1109A	LOC-3E
1065C	LOC-3F-2	1077D	LOC-3F-1	1092C	LOC-3F-2	1109B	LOC-3E
1066A	LOC-3F-2	1078A	LOC-3F-1	1093B	LOC-3F-2	1109C	LOC-3E
1066B	LOC-3F-2	1078B	LOC-3F-1	1093C	LOC-3F-2	110A	LOC-6E
1066C	LOC-3F-2	1078C	LOC-3F-1	1094A	LOC-3F-2	110B	LOC-6E
1067A	LOC-3F-1	1079A	LOC-3F-1	1094B	LOC-3F-2	1110A	LOC-3E
1067B	LOC-3F-1	1079BD	LOC-3F-1	1095A	LOC-3F-2	1110B	LOC-3E
1067C	LOC-3F-1	1079C	LOC-3F-1	1095B	LOC-3F-2	1110C	LOC-3E
1068D	LOC-3F-2	107A	LOC-6E	1096A	LOC-3F-2	1111A	LOC-3E
1069A	LOC-3F-2	107B	LOC-6E	1096B	LOC-3F-2	1111B	LOC-3E
1069C	LOC-3F-2	1080A	LOC-3F-1	1097A	LOC-3F-2	1111C	LOC-3E
1069D	LOC-3F-2	1080B	LOC-3F-1	1097B	LOC-3F-2	1112A	LOC-3E
106A	LOC-6E	1081A	LOC-3F-1	1097E	LOC-3F-2	1112B	LOC-3E
106B	LOC-6E	1081B	LOC-3F-1	1098B	LOC-3F-2	1112C	LOC-3E
1070A	LOC-3F-2	1082A	LOC-3F-1	1099A	LOC-3F-2	1113A	LOC-3E

Table E.3 Cable Routing Points to Location Mapping (Continued)

Routing Pt	Location	Routing Pt	Location	Routing Pt	Location	Routing Pt	Location
1113B	LOC-3E	112A	LOC-6E	1144E	LOC-3D	1158B	LOC-3D
1113C	LOC-3E	112B	LOC-6E	1145D	LOC-3D	1158C	LOC-3D
1114A	LOC-3E	1130A	LOC-3E	1145E	LOC-3D	1159A	LOC-3D
1114B	LOC-3E	1130C	LOC-3E	1146D	LOC-3D	1159B	LOC-3D
1114C	LOC-3E	1131A	LOC-3E	1146E	LOC-3D	1159C	LOC-3D
1115A	LOC-3E	1131B	LOC-3E	1147D	LOC-3D	115A	LOC-6E
1115B	LOC-3E	1131C	LOC-3E	1147E	LOC-3D	115B	LOC-6E
1115C	LOC-3E	1132C	LOC-3E	1148D	LOC-3D	1160A	LOC-3D
1116A	LOC-3E	1133R	LOC-3E	1148E	LOC-3D	1160B	LOC-3D
1116B	LOC-3E	1134A	LOC-3D	1149D	LOC-3D	1161A	LOC-3D
1116C	LOC-3E	1134B	LOC-3D	1149E	LOC-3D	1161B	LOC-3D
1117B	LOC-3E	1135A	LOC-3D	114A	LOC-6E	1162A	LOC-3D
1117C	LOC-3E	1135B	LOC-3D	114B	LOC-6E	1162B	LOC-3D
1118B	LOC-3E	1136A	LOC-3D	1150A	LOC-3D	1163A	LOC-3D
1118C	LOC-3E	1136B	LOC-3D	1150B	LOC-3D	1163B	LOC-3D
1119A	LOC-3E	1137A	LOC-3D	1150C	LOC-3D	1163C	LOC-3D
1119B	LOC-3E	1137B	LOC-3D	1151A	LOC-3D	1164A	LOC-3C-2
1119C	LOC-3E	1137C	LOC-3D	1151B	LOC-3D	1164B	LOC-3C-2
111A	LOC-6E	1138A	LOC-3D	1151C	LOC-3D	1164C	LOC-3C-2
111B	LOC-6E	1138B	LOC-3D	1152A	LOC-3D	1165A	LOC-3C-2
1120A	LOC-3E	1138C	LOC-3D	1152B	LOC-3D	1165B	LOC-3C-2
1120B	LOC-3E	1139A	LOC-3D	1152C	LOC-3D	1165C	LOC-3C-2
1120C	LOC-3E	1139B	LOC-3D	1153A	LOC-3D	1166A	LOC-3C-5
1121A	LOC-3E	1139C	LOC-3D	1153B	LOC-3D	1166B	LOC-3C-5
1121B	LOC-3E	113A	LOC-6E	1153C	LOC-3D	1166C	LOC-3C-5
1121C	LOC-3E	113B	LOC-6E	1154A	LOC-3D	1167A	LOC-3C-2
1122C	LOC-3E	1140A	LOC-3D	1154B	LOC-3D	1167B	LOC-3C-2
1123B	LOC-3E	1140B	LOC-3D	1154C	LOC-3D	1167C	LOC-3C-2
1124A	LOC-3E	1140C	LOC-3D	1155A	LOC-3D	1168A	LOC-3B2-1
1124B	LOC-3E	1141A	LOC-3D	1155B	LOC-3D	1168B	LOC-3B2-1
1125B	LOC-3E	1142A	LOC-3D	1155C	LOC-3D	1168C	LOC-3B2-1
1126A	LOC-3E	1142B	LOC-3D	1156A	LOC-3D	1169A	LOC-3B2-1
1126B	LOC-3E	1143A	LOC-3D	1156B	LOC-3D	1169B	LOC-3B2-1
1127B	LOC-3E	1143B	LOC-3D	1157A	LOC-3D	1169C	LOC-3B2-1
1128B	LOC-3E	1143C	LOC-3D	1157B	LOC-3D	116A	LOC-6E
1129B	LOC-3E	1144D	LOC-3D	1158A	LOC-3D	116B	LOC-6E

Table E.3 Cable Routing Points to Location Mapping (Continued)

Routing Pt	Location	Routing Pt	Location	Routing Pt	Location	Routing Pt	Location
116D	LOC-6E	1181C	LOC-3F-2	1253A	LOC-3J	1270C	LOC-3J
1170A	LOC-3B2-1	1181D	LOC-3F-2	1253B	LOC-3J	1271B	LOC-3J
1170B	LOC-3B2-1	1182R	LOC-3D	1253C	LOC-3J	1271C	LOC-3J
1170C	LOC-3B2-1	1183R	LOC-3B1	1254A	LOC-3J	127A	LOC-5D2
1171A	LOC-3B2-1	1184D	LOC-3B1	1254B	LOC-3J	127B	LOC-5D2
1171B	LOC-3B2-1	1185B	LOC-3G-1	1254C	LOC-3J	128A	LOC-5D2
1171C	LOC-3B2-1	1186B	LOC-3E	1255A	LOC-3J	128B	LOC-5D2
1172A	LOC-3B1	1187A	LOC-3E	1255B	LOC-3J	129B	LOC-5D2
1172B	LOC-3B1	1187B	LOC-3E	1255C	LOC-3J	1300A	LOC-3I1
1172C	LOC-3B1	1187C	LOC-3E	1256C	LOC-3J	1300B	LOC-3I1
1172D	LOC-3B1	1188A	LOC-3B2-1	1256D	LOC-3J	1301A	LOC-3I5
1173A	LOC-3B1	1188B	LOC-3B2-1	1257C	LOC-3J	1301B	LOC-3I5
1173B	LOC-3B1	118A	LOC-6E	1258C	LOC-3J	1302A	LOC-3I5
1173C	LOC-3B1	118B	LOC-6E	1259C	LOC-3J	1302B	LOC-3I5
1174A	LOC-3B1	118C	LOC-6E	125A	LOC-5D2	1303A	LOC-3I5
1174B	LOC-3B1	118D	LOC-6E	125B	LOC-5D2	1303B	LOC-3I5
1174C	LOC-3B1	119C	LOC-6E	1260C	LOC-3J	1303C	LOC-3I5
1175A	LOC-3B1	119D	LOC-6E	1261C	LOC-3J	1304A	LOC-3I5
1175B	LOC-3B1	120A	LOC-5D2	1262C	LOC-3J	1304B	LOC-3I5
1175C	LOC-3B1	120B	LOC-5D2	1263B	LOC-3J	1304C	LOC-3I5
1176A	LOC-3B1	121A	LOC-5D2	1263C	LOC-3J	1305A	LOC-3I5
1176B	LOC-3B1	121B	LOC-5D2	1264B	LOC-3J	1305B	LOC-3I5
1176C	LOC-3B1	122B	LOC-5D2	1264C	LOC-3J	1305C	LOC-3I5
1177A	LOC-3B1	123A	LOC-5D2	1265B	LOC-3J	1306C	LOC-3I5
1177B	LOC-3B1	123B	LOC-5D2	1265C	LOC-3J	1307A	LOC-3I5
1178A	LOC-3B1	124A	LOC-5D2	1266B	LOC-3J	1307B	LOC-3I5
1178B	LOC-3B1	124B	LOC-5D2	1266C	LOC-3J	1308A	LOC-3I1
1179A	LOC-3B1	1250A	LOC-3J	1267B	LOC-3J	1308B	LOC-3I1
1179B	LOC-3B1	1250B	LOC-3J	1267C	LOC-3J	1308C	LOC-3I1
117A	LOC-6E	1250C	LOC-3J	1268B	LOC-3J	1309A	LOC-3I4
117B	LOC-6E	1251A	LOC-3J	1268C	LOC-3J	1309B	LOC-3I4
117D	LOC-6E	1251B	LOC-3J	1269B	LOC-3J	1309C	LOC-3I4
1180A	LOC-3B1	1251C	LOC-3J	1269C	LOC-3J	130A	LOC-8C3
1180B	LOC-3B1	1252A	LOC-3J	126A	LOC-5D2	130B	LOC-8C3
1180C	LOC-3B1	1252B	LOC-3J	126B	LOC-5D2	1310A	LOC-3I4
1181A	LOC-3F-2	1252C	LOC-3J	1270B	LOC-3J	1310B	LOC-3I4

Table E.3 Cable Routing Points to Location Mapping (Continued)

Routing Pt	Location	Routing Pt	Location	Routing Pt	Location	Routing Pt	Location
1310C	LOC-3I4	1323C	LOC-3H1	1336F	LOC-3G-1	134C	LOC-8C5
1311A	LOC-3I4	1324A	LOC-3H4	1337E	LOC-3G-1	134D	LOC-8C5
1311B	LOC-3I4	1324B	LOC-3H4	1337F	LOC-3G-1	1350A	LOC-3G-1
1311C	LOC-3I4	1324C	LOC-3H4	1338AE	LOC-3G-1	1350C	LOC-3G-1
1312A	LOC-3I4	1325A	LOC-3H4	1338FC	LOC-3G-1	1350R	LOC-3G-1
1312B	LOC-3I4	1325B	LOC-3H4	1339A	LOC-3G-1	1351A	LOC-3G-1
1312C	LOC-3I4	1325C	LOC-3H4	1339B	LOC-3G-1	1351C	LOC-3G-1
1313A	LOC-3I4	1326A	LOC-3H4	1339C	LOC-3G-1	1351R	LOC-3G-1
1313B	LOC-3I4	1326B	LOC-3H4	1339D	LOC-3G-1	1352A	LOC-3G-1
1313C	LOC-3I4	1327A	LOC-3H4	133A	LOC-8C3	1352B	LOC-3G-1
1314A	LOC-3H5	1327B	LOC-3H4	133B	LOC-8C3	1352C	LOC-3G-1
1314B	LOC-3H5	1328A	LOC-3H4	133C	LOC-8C3	1352D	LOC-3G-1
1315A	LOC-3H5	1328B	LOC-3H4	133D	LOC-8C3	1352E	LOC-3G-1
1315B	LOC-3H5	1329A	LOC-3H4	1340A	LOC-3G-1	1353B	LOC-3G-1
1316A	LOC-3H5	1329B	LOC-3H4	1340B	LOC-3G-1	1353D	LOC-3G-1
1316B	LOC-3H5	132A	LOC-8C3	1340C	LOC-3G-1	1353E	LOC-3G-1
1317A	LOC-3H5	132B	LOC-8C3	1340D	LOC-3G-1	1353R	LOC-3G-1
1317B	LOC-3H5	1330A	LOC-3H4	1341A	LOC-3G-1	1354B	LOC-3G-1
1317C	LOC-3H5	1331A	LOC-3H4	1341C	LOC-3G-1	1354D	LOC-3G-1
1318A	LOC-3H5	1331B	LOC-3H4	1342D	LOC-3G-1	1354E	LOC-3G-1
1318B	LOC-3H5	1332A	LOC-3H4	1343B	LOC-3G-1	1354R	LOC-3G-1
1318C	LOC-3H5	1332B	LOC-3H4	1343D	LOC-3G-1	1355B	LOC-3G-1
1319A	LOC-3H5	1332C	LOC-3H4	1344B	LOC-3G-1	1355D	LOC-3G-1
1319B	LOC-3H5	1333A	LOC-3G-1	1344D	LOC-3G-1	1355E	LOC-3G-1
1319C	LOC-3H5	1333B	LOC-3G-1	1345B	LOC-3G-1	1355R	LOC-3G-1
131A	LOC-8C3	1333C	LOC-3G-1	1345D	LOC-3G-1	1356B	LOC-3G-1
131B	LOC-8C3	1333D	LOC-3G-1	1346B	LOC-3G-1	1356D	LOC-3G-1
1320C	LOC-3H5	1334A	LOC-3G-1	1346D	LOC-3G-1	1356E	LOC-3G-1
1321A	LOC-3H1	1334B	LOC-3G-1	1347R	LOC-3G-1	1357B	LOC-3G-1
1321B	LOC-3H1	1334C	LOC-3G-1	1348R	LOC-3G-1	1357D	LOC-3G-1
1321C	LOC-3H1	1334D	LOC-3G-1	1349A	LOC-3G-1	1357E	LOC-3G-1
1322A	LOC-3H1	1335A	LOC-3G-1	1349B	LOC-3G-1	1358D	LOC-3G-1
1322B	LOC-3H1	1335B	LOC-3G-1	1349C	LOC-3G-1	1358E	LOC-3G-1
1322C	LOC-3H1	1335C	LOC-3G-1	1349D	LOC-3G-1	1359B	LOC-3G-1
1323A	LOC-3H1	1335D	LOC-3G-1	134A	LOC-8C5	1359D	LOC-3G-1
1323B	LOC-3H1	1336E	LOC-3G-1	134B	LOC-8C5	135A	LOC-8C5

Table E.3 Cable Routing Points to Location Mapping (Continued)

Routing Pt	Location	Routing Pt	Location	Routing Pt	Location	Routing Pt	Location
135B	LOC-8C5	1370CD	LOC-3G-1	1381A	LOC-3F-1	1395B	LOC-3F-1
135C	LOC-8C5	1371B	LOC-3G-1	1381B	LOC-3F-1	1395D	LOC-3F-1
135D	LOC-8C5	1371D	LOC-3G-1	1381D	LOC-3F-1	1396A	LOC-3F-1
1360B	LOC-3G-1	1371E	LOC-3G-1	1382A	LOC-3F-1	1396D	LOC-3F-1
1360D	LOC-3G-1	1371R	LOC-3G-1	1382B	LOC-3F-1	1397A	LOC-3F-1
1360E	LOC-3G-1	1372B	LOC-3F-1	1382D	LOC-3F-1	1398B	LOC-3F-1
1361B	LOC-3G-1	1372C	LOC-3F-1	1383A	LOC-3F-1	1398D	LOC-3F-1
1361D	LOC-3G-1	1372D	LOC-3F-1	1383B	LOC-3F-1	1399B	LOC-3F-1
1361E	LOC-3G-1	1373B	LOC-3F-1	1384A	LOC-3F-1	1399D	LOC-3F-1
1362B	LOC-3G-1	1373C	LOC-3F-1	1384B	LOC-3F-1	139A	LOC-8C4
1362D	LOC-3G-1	1373D	LOC-3F-1	1384D	LOC-3F-1	139B	LOC-8C4
1362E	LOC-3G-1	1374A	LOC-3F-1	1385A	LOC-3F-1	1400A	LOC-3F-1
1363B	LOC-3G-1	1374B	LOC-3F-1	1385B	LOC-3F-1	1400B	LOC-3F-1
1363D	LOC-3G-1	1374C	LOC-3F-1	1386A	LOC-3F-1	1401A	LOC-3F-1
1363E	LOC-3G-1	1374D	LOC-3F-1	1386B	LOC-3F-1	1401B	LOC-3F-1
1364B	LOC-3G-1	1375A	LOC-3F-1	1386D	LOC-3F-1	1401E	LOC-3F-1
1364D	LOC-3G-1	1375B	LOC-3F-1	1387A	LOC-3F-1	1401F	LOC-3F-1
1364E	LOC-3G-1	1375CB	LOC-3F-1	1387B	LOC-3F-1	1402A	LOC-3F-1
1365B	LOC-3G-1	1375D	LOC-3F-1	1388A	LOC-3F-1	1402B	LOC-3F-1
1365D	LOC-3G-1	1376A	LOC-3F-1	1388B	LOC-3F-1	1402D	LOC-3F-1
1365E	LOC-3G-1	1376B	LOC-3F-1	1389D	LOC-3F-1	1403A	LOC-3F-1
1366B	LOC-3G-1	1376D	LOC-3F-1	138A	LOC-8C5	1403B	LOC-3F-1
1366D	LOC-3G-1	1377A	LOC-3F-1	138B	LOC-8C5	1403D	LOC-3F-1
1366E	LOC-3G-1	1377B	LOC-3F-1	138C	LOC-8C5	1404A	LOC-3F-1
1367B	LOC-3G-1	1377D	LOC-3F-1	138D	LOC-8C5	1404B	LOC-3F-1
1367D	LOC-3G-1	1378A	LOC-3F-1	1390A	LOC-3F-1	1404D	LOC-3F-1
1367E	LOC-3G-1	1378B	LOC-3F-1	1390B	LOC-3F-1	1405A	LOC-3F-1
1368B	LOC-3G-1	1378D	LOC-3F-1	1391B	LOC-3F-1	1405B	LOC-3F-1
1368D	LOC-3G-1	1379A	LOC-3F-1	1391C	LOC-3F-1	1405D	LOC-3F-1
1368E	LOC-3G-1	1379B	LOC-3F-1	1391D	LOC-3F-1	1406E	LOC-3F-1
1369E	LOC-3G-1	137A	LOC-8C5	1392C	LOC-3F-1	1406F	LOC-3F-1
136A	LOC-8C5	137B	LOC-8C5	1392D	LOC-3F-1	1407E	LOC-3F-1
136B	LOC-8C5	137C	LOC-8C5	1393C	LOC-3F-1	1407F	LOC-3F-1
136C	LOC-8C5	137D	LOC-8C5	1393D	LOC-3F-1	1408D	LOC-3F-1
136D	LOC-8C5	1380A	LOC-3F-1	1394C	LOC-3F-1	1408E	LOC-3F-1
1370AB	LOC-3G-1	1380B	LOC-3F-1	1395A	LOC-3F-1	1408F	LOC-3F-1

Table E.3 Cable Routing Points to Location Mapping (Continued)

Routing Pt	Location	Routing Pt	Location	Routing Pt	Location	Routing Pt	Location
1409A	LOC-3F-1	1420C	LOC-3E	1433B	LOC-3E	1449A	LOC-3D
1409B	LOC-3F-1	1421A	LOC-3E	1433C	LOC-3E	144A	LOC-8B1
1409D	LOC-3F-1	1421B	LOC-3E	1434A	LOC-3E	144B	LOC-8B1
1409E	LOC-3F-1	1421C	LOC-3E	1434B	LOC-3E	1450A	LOC-3D
1409F	LOC-3F-1	1422A	LOC-3E	1435A	LOC-3E	1450B	LOC-3D
140A	LOC-8C4	1422B	LOC-3E	1435B	LOC-3E	1451A	LOC-3D
140B	LOC-8C4	1422C	LOC-3E	1435C	LOC-3E	1451B	LOC-3D
1410A	LOC-3F-1	1423A	LOC-3E	1436AD	LOC-3E	1452D	LOC-3D
1410B	LOC-3F-1	1423B	LOC-3E	1436BE	LOC-3E	1452E	LOC-3D
1410D	LOC-3F-1	1423C	LOC-3E	1437D	LOC-3E	1453D	LOC-3D
1411A	LOC-3F-1	1424A	LOC-3E	1437E	LOC-3E	1453E	LOC-3D
1411B	LOC-3F-1	1424B	LOC-3E	1438D	LOC-3E	1454D	LOC-3D
1411E	LOC-3F-1	1424C	LOC-3E	1438E	LOC-3E	1454E	LOC-3D
1411F	LOC-3F-1	1425A	LOC-3E	1439D	LOC-3E	1455B	LOC-3C-2
1412A	LOC-3F-1	1425B	LOC-3E	1439E	LOC-3E	1456A	LOC-3C-2
1412B	LOC-3F-1	1425C	LOC-3E	143A	LOC-8C4	1456B	LOC-3C-2
1412D	LOC-3F-1	1426B	LOC-3E	143B	LOC-8C4	1456C	LOC-3C-2
1413A	LOC-3F-1	1427A	LOC-3E	1440R	LOC-3E	1457A	LOC-3C-2
1413B	LOC-3F-1	1427B	LOC-3E	1441A	LOC-3D	1457B	LOC-3C-2
1413D	LOC-3F-1	1427C	LOC-3E	1441B	LOC-3D	1457C	LOC-3C-2
1414A	LOC-3F-1	1428A	LOC-3E	1441C	LOC-3D	1458A	LOC-3C-2
1414B	LOC-3F-1	1428B	LOC-3E	1442A	LOC-3D	1458B	LOC-3C-2
1414D	LOC-3F-1	1428C	LOC-3E	1442B	LOC-3D	1459A	LOC-3C-2
1415D	LOC-3F-1	1429A	LOC-3E	1442C	LOC-3D	1459B	LOC-3C-2
1416D	LOC-3F-1	1429B	LOC-3E	1443A	LOC-3D	1459C	LOC-3C-3
1417C	LOC-3E	142A	LOC-8C4	1443B	LOC-3D	145A	LOC-8B1
1418A	LOC-3E	142B	LOC-8C4	1443C	LOC-3D	145B	LOC-8B1
1418B	LOC-3E	1430A	LOC-3E	1444A	LOC-3D	1460A	LOC-3C-2
1418C	LOC-3E	1430B	LOC-3E	1444B	LOC-3D	1460B	LOC-3C-2
1419A	LOC-3E	1431A	LOC-3E	1444C	LOC-3D	1460C	LOC-3C-2
1419B	LOC-3E	1431B	LOC-3E	1445A	LOC-3D	1461A	LOC-3D
1419C	LOC-3E	1431C	LOC-3E	1445B	LOC-3D	1461B	LOC-3D
141A	LOC-8C4	1432A	LOC-3E	1445C	LOC-3D	1461C	LOC-3D
141B	LOC-8C4	1432B	LOC-3E	1446B	LOC-3D	1462A	LOC-3D
1420A	LOC-3E	1432C	LOC-3E	1447B	LOC-3D	1462B	LOC-3D
1420B	LOC-3E	1433A	LOC-3E	1448B	LOC-3D	1462C	LOC-3D

Table E.3 Cable Routing Points to Location Mapping (Continued)

Routing Pt	Location	Routing Pt	Location	Routing Pt	Location	Routing Pt	Location
1463A	LOC-3D	1474C	LOC-3B2-1	1485D	LOC-3G-1	1551D	LOC-3J
1463B	LOC-3D	1475A	LOC-3B2-5	1485E	LOC-3G-1	1553B	LOC-3J
1463C	LOC-3D	1475B	LOC-3B2-5	1486R	LOC-3E	1553C	LOC-3J
1464A	LOC-3D	1475C	LOC-3B2-5	1487R	LOC-3E	1555A	LOC-3J
1464B	LOC-3D	1476A	LOC-3B2-5	1488R	LOC-3D	1555B	LOC-3J
1464C	LOC-3D	1476B	LOC-3B2-5	1489B	LOC-3D	1555C	LOC-3J
1465A	LOC-3D	1476C	LOC-3B2-5	148A	LOC-8B1	1556A	LOC-3J
1465B	LOC-3D	1477A	LOC-3B2-5	148B	LOC-8B1	1556B	LOC-3J
1466A	LOC-3D	1477B	LOC-3B2-5	1490B	LOC-3D	1556C	LOC-3J
1466B	LOC-3D	1477C	LOC-3B2-5	1491B	LOC-3D	1557A	LOC-3J
1466C	LOC-3D	1478A	LOC-3B2-5	1492B	LOC-3D	1557B	LOC-3J
1467A	LOC-3D	1478B	LOC-3B2-5	1493A	LOC-3I6	1557C	LOC-3J
1467B	LOC-3D	1478C	LOC-3B2-5	1493B	LOC-3I6	1558A	LOC-3J
1467C	LOC-3D	1479A	LOC-3B1	1493C	LOC-3I6	1558B	LOC-3J
1468A	LOC-3D	1479B	LOC-3B1	1494D	LOC-3G-1	1558C	LOC-3J
1468B	LOC-3D	1479C	LOC-3B1	1495B	LOC-3E	1559A	LOC-3J
1468C	LOC-3D	147A	LOC-8B1	1495E	LOC-3E	1559B	LOC-3J
1469A	LOC-3D	147B	LOC-8B1	1496A	LOC-3E	1559C	LOC-3J
1469B	LOC-3D	1480A	LOC-3B1	1496B	LOC-3E	155A	LOC-5C11-4
1469C	LOC-3D	1480B	LOC-3B1	1497A	LOC-3H1	155B	LOC-5C11-4
146A	LOC-8B1	1480C	LOC-3B1	1497B	LOC-3H1	1560A	LOC-3J
146B	LOC-8B1	1481A	LOC-3B1	1497C	LOC-3H1	1560B	LOC-3J
1470A	LOC-3D	1481B	LOC-3B1	1498C	LOC-3E	1560C	LOC-3J
1470B	LOC-3D	1481C	LOC-3B1	149A	LOC-8B1	1561B	LOC-3J
1470C	LOC-3D	1482A	LOC-3B1	149B	LOC-8B1	1561C	LOC-3J
1471A	LOC-3D	1482B	LOC-3B1	150A	LOC-8B1	1562A	LOC-3J
1471B	LOC-3D	1482C	LOC-3B1	150B	LOC-8B1	1562B	LOC-3J
1471C	LOC-3D	1483A	LOC-3B1	151A	LOC-8B1	1562C	LOC-3J
1472A	LOC-3D	1483B	LOC-3B1	151B	LOC-8B1	1563A	LOC-3J
1472B	LOC-3D	1483C	LOC-3B1	152A	LOC-8B1	1563B	LOC-3J
1472C	LOC-3D	1483D	LOC-3B1	152B	LOC-8B1	1563C	LOC-3J
1473A	LOC-3B2-1	1483E	LOC-3B1	153A	LOC-5C11-4	1564A	LOC-3J
1473B	LOC-3B2-1	1484A	LOC-3B1	153B	LOC-5C11-4	1564B	LOC-3J
1473C	LOC-3B2-1	1484B	LOC-3B1	154A	LOC-5C11-4	1564C	LOC-3J
1474A	LOC-3B2-1	1484C	LOC-3B1	154B	LOC-5C11-4	1565C	LOC-3J
1474B	LOC-3B2-1	1485B	LOC-3G-1	1550D	LOC-3J	1566A	LOC-3J

Table E.3 Cable Routing Points to Location Mapping (Continued)

Routing Pt	Location	Routing Pt	Location	Routing Pt	Location	Routing Pt	Location
1566B	LOC-3J	1588B	LOC-3J	1613D	LOC-3E	164A	LOC-5C11-5
1567A	LOC-3J	1589B	LOC-3J	1613E	LOC-3E	164B	LOC-5C11-5
1567B	LOC-3J	158A	LOC-8B2	1614A	LOC-3E	164C	LOC-5C11-5
1568C	LOC-3J	158B	LOC-8B2	1614B	LOC-3E	164D	LOC-5C11-5
1569C	LOC-3J	1590B	LOC-3J	1615A	LOC-3E	1655B	LOC-OG
156A	LOC-8B2	1591B	LOC-3J	1615B	LOC-3E	1656D	LOC-OG
156B	LOC-8B2	159A	LOC-8B2	1616A	LOC-3E	1656E	LOC-OG
1570C	LOC-3J	159B	LOC-8B2	1616B	LOC-3E	1657D	LOC-OG
1571C	LOC-3J	1600D	LOC-3E	1617A	LOC-3E	1657E	LOC-OG
1572B	LOC-3J	1600E	LOC-3E	1617B	LOC-3E	1658D	LOC-OG
1572C	LOC-3J	1601D	LOC-3E	1618A	LOC-3E	1658E	LOC-OG
1573B	LOC-3J	1601E	LOC-3E	1618B	LOC-3E	1659D	LOC-OG
1573C	LOC-3J	1602D	LOC-3E	1619A	LOC-3E	1659E	LOC-OG
1574B	LOC-3J	1602E	LOC-3E	1619B	LOC-3E	165A	LOC-5C11-5
1574C	LOC-3J	1603D	LOC-3E	161A	LOC-8B2	165B	LOC-5C11-5
1575B	LOC-3J	1603E	LOC-3E	161B	LOC-8B2	165C	LOC-5C11-5
1575C	LOC-3J	1604D	LOC-3E	1620A	LOC-3E	165D	LOC-5C11-5
1576B	LOC-3J	1604E	LOC-3E	1620B	LOC-3E	1663D	LOC-OG
1576C	LOC-3J	1605D	LOC-3E	1621D	LOC-3E	1663E	LOC-OG
1577B	LOC-3J	1605E	LOC-3E	1621E	LOC-3E	1665D	LOC-OG
1577C	LOC-3J	1606D	LOC-3E	1622D	LOC-3E	1665E	LOC-OG
1578B	LOC-3J	1606E	LOC-3E	1622E	LOC-3E	1666D	LOC-OG
1578C	LOC-3J	1607D	LOC-3E	1623D	LOC-3E	1666E	LOC-OG
1579B	LOC-3J	1607E	LOC-3E	1623E	LOC-3E	166A	LOC-5C11-4
1579C	LOC-3J	1608D	LOC-3E	1624D	LOC-3E	166B	LOC-5C11-4
157A	LOC-8B2	1608E	LOC-3E	1624E	LOC-3E	166C	LOC-5C11-4
157B	LOC-8B2	1609D	LOC-3E	1625D	LOC-3E	166D	LOC-5C11-4
1580B	LOC-3J	1609E	LOC-3E	1625E	LOC-3E	167A	LOC-5C11-4
1580C	LOC-3J	160A	LOC-8B2	1626D	LOC-3E	167B	LOC-5C11-4
1581C	LOC-3J	160B	LOC-8B2	1626E	LOC-3E	167C	LOC-5C11-4
1582B	LOC-3J	1610D	LOC-3E	1627D	LOC-3E	167D	LOC-5C11-4
1583B	LOC-3J	1610E	LOC-3E	1627E	LOC-3E	168A	LOC-5C11-4
1584B	LOC-3J	1611D	LOC-3E	162A	LOC-8B2	168B	LOC-5C11-4
1585B	LOC-3J	1611E	LOC-3E	162B	LOC-8B2	168C	LOC-5C11-4
1586B	LOC-3J	1612D	LOC-3E	163A	LOC-8B2	168D	LOC-5C11-4
1587B	LOC-3J	1612E	LOC-3E	163B	LOC-8B2	169A	LOC-5C11-4

Table E.3 Cable Routing Points to Location Mapping (Continued)

Routing Pt	Location	Routing Pt	Location	Routing Pt	Location	Routing Pt	Location
169C	LOC-5C11-4	1713D	LOC-6E	1725A	LOC-6E	1736B	LOC-6E
1700A	LOC-6E	1714A	LOC-6E	1725D	LOC-6E	1737A	LOC-6E
1700B	LOC-6E	1714B	LOC-6E	1725E	LOC-6E	1737B	LOC-6E
1701A	LOC-6E	1714C	LOC-6E	1726A	LOC-6E	1737D	LOC-6E
1701B	LOC-6E	1714D	LOC-6E	1726B	LOC-6E	1738A	LOC-5E2
1702A	LOC-6E	1715A	LOC-6E	1726C	LOC-6E	1738B	LOC-5E2
1702B	LOC-6E	1715C	LOC-6E	1726D	LOC-6E	1738D	LOC-5E2
1703A	LOC-6E	1715D	LOC-6E	1726E	LOC-6E	1739A	LOC-5E2
1703B	LOC-6E	1716A	LOC-6E	1727A	LOC-6E	1739B	LOC-5E2
1704A	LOC-6E	1717A	LOC-6E	1727C	LOC-6E	1739D	LOC-5E2
1704B	LOC-6E	1717D	LOC-6E	1727D	LOC-6E	173A	LOC-5C11-4
1705A	LOC-6E	1717E	LOC-6E	1728A	LOC-6E	173C	LOC-5C11-4
1705B	LOC-6E	1718A	LOC-6E	1728C	LOC-6E	1740A	LOC-5E2
1706A	LOC-6E	1718D	LOC-6E	1728D	LOC-6E	1740B	LOC-5E2
1706B	LOC-6E	1718E	LOC-6E	1729A	LOC-6E	1741A	LOC-5E2
1707A	LOC-6E	1719A	LOC-6E	1729B	LOC-6E	1741B	LOC-5E2
1707B	LOC-6E	1719D	LOC-6E	1729D	LOC-6E	1741D	LOC-5E2
1708A	LOC-6E	1719E	LOC-6E	172A	LOC-5C11-4	1742A	LOC-5E2
1708B	LOC-6E	171A	LOC-5C11-4	172C	LOC-5C11-4	1742B	LOC-5E2
1708C	LOC-6E	171C	LOC-5C11-4	1730A	LOC-6E	1742D	LOC-5E2
1709A	LOC-6E	1720A	LOC-6E	1730B	LOC-6E	1742E	LOC-5E2
1709B	LOC-6E	1720D	LOC-6E	1730D	LOC-6E	1742F	LOC-5E2
1709D	LOC-6E	1720E	LOC-6E	1731A	LOC-6E	1743A	LOC-5E2
170A	LOC-5C11-4	1721A	LOC-6E	1731B	LOC-6E	1743B	LOC-5E2
170C	LOC-5C11-4	1721B	LOC-6E	1731D	LOC-6E	1743D	LOC-5E2
1710A	LOC-6E	1721BE	LOC-6E	1732A	LOC-6E	1743E	LOC-5E2
1710B	LOC-6E	1721D	LOC-6E	1732B	LOC-6E	1743F	LOC-5E2
1710E	LOC-6E	1722A	LOC-6E	1732D	LOC-6E	1744A	LOC-5E2
1710F	LOC-6E	1722D	LOC-6E	1733A	LOC-6E	1744B	LOC-5E2
1711E	LOC-6E	1722E	LOC-6E	1733B	LOC-6E	1744D	LOC-5E2
1711F	LOC-6E	1723A	LOC-6E	1733D	LOC-6E	1745A	LOC-5E2
1712E	LOC-6E	1723D	LOC-6E	1734A	LOC-6E	1745B	LOC-5E2
1712F	LOC-6E	1723E	LOC-6E	1734B	LOC-6E	1745D	LOC-5E2
1713A	LOC-6E	1724A	LOC-6E	1735A	LOC-6E	1746A	LOC-5E2
1713B	LOC-6E	1724D	LOC-6E	1735B	LOC-6E	1746B	LOC-5E2
1713C	LOC-6E	1724E	LOC-6E	1736A	LOC-6E	1747A	LOC-5E2

Table E.3 Cable Routing Points to Location Mapping (Continued)

Routing Pt	Location	Routing Pt	Location	Routing Pt	Location	Routing Pt	Location
1747B	LOC-5E2	175A	LOC-5C11-4	1772C	LOC-6D	1784B	LOC-6D
1748A	LOC-5E2	175B	LOC-5C11-4	1773A	LOC-6D	1784C	LOC-6D
1748B	LOC-5E2	175C	LOC-5C11-4	1773B	LOC-6D	1785A	LOC-6D
1749A	LOC-5E2	1760A	LOC-6D	1773C	LOC-6D	1785B	LOC-6D
1749B	LOC-5E2	1760B	LOC-6D	1774A	LOC-6D	1786A	LOC-6D
1749E	LOC-5E2	1760C	LOC-6D	1774B	LOC-6D	1786B	LOC-6D
1749F	LOC-5E2	1761A	LOC-6D	1774C	LOC-6D	1787A	LOC-6D
174A	LOC-5C11-4	1761B	LOC-6D	1775A	LOC-6D	1787B	LOC-6D
174C	LOC-5C11-4	1761C	LOC-6D	1775B	LOC-6D	1788A	LOC-6D
1750A	LOC-5E2	1762A	LOC-6D	1775C	LOC-6D	1788B	LOC-6D
1750B	LOC-5E2	1762B	LOC-6D	1776A	LOC-6D	1789A	LOC-5D4
1750D	LOC-5E2	1763A	LOC-6D	1776B	LOC-6D	1789B	LOC-5D4
1751A	LOC-6D	1763B	LOC-6D	1776C	LOC-6D	178D	LOC-5C11-4
1751B	LOC-6D	1764A	LOC-6D	1777A	LOC-6D	1790A	LOC-5D4
1751D	LOC-6D	1764B	LOC-6D	1777B	LOC-6D	1790B	LOC-5D4
1752A	LOC-6D	1764C	LOC-6D	1777C	LOC-6D	1791A	LOC-5D4
1752B	LOC-6D	1765A	LOC-6D	1778A	LOC-6D	1791B	LOC-5D4
1753A	LOC-6D	1765B	LOC-6D	1778B	LOC-6D	1791C	LOC-5D4
1753B	LOC-6D	1765C	LOC-6D	1778C	LOC-6D	1792A	LOC-5D4
1754A	LOC-6D	1766A	LOC-6D	1779A	LOC-5D4	1792B	LOC-5D4
1754B	LOC-6D	1766B	LOC-6D	1779B	LOC-5D4	1792C	LOC-5D4
1755A	LOC-6D	1766C	LOC-6D	1779C	LOC-5D4	1793A	LOC-5D4
1755B	LOC-6D	1767B	LOC-6D	177A	LOC-5C11	1793B	LOC-5D4
1755C	LOC-6D	1767C	LOC-6D	177B	LOC-5C11	1793C	LOC-5D4
1756A	LOC-6D	1768C	LOC-6D	177C	LOC-5C11	1794A	LOC-5D4
1756B	LOC-6D	1769B	LOC-6D	1780A	LOC-5D4	1794B	LOC-5D4
1756C	LOC-6D	1769C	LOC-6D	1780B	LOC-5D4	1794C	LOC-5D4
1757A	LOC-6D	176A	LOC-5C11	1780C	LOC-5D4	1795A	LOC-5D4
1757B	LOC-6D	176B	LOC-5C11	1781A	LOC-5D4	1795B	LOC-5D4
1757C	LOC-6D	176C	LOC-5C11	1781B	LOC-5D4	1795C	LOC-5D4
1758A	LOC-6D	1770B	LOC-6D	1782A	LOC-5D4	1796A	LOC-5D4
1758B	LOC-6D	1770C	LOC-6D	1782B	LOC-5D4	1796B	LOC-5D4
1758C	LOC-6D	1771A	LOC-6D	1783A	LOC-6D	1796C	LOC-5D4
1759A	LOC-6D	1771B	LOC-6D	1783B	LOC-6D	1797A	LOC-5D4
1759B	LOC-6D	1772A	LOC-6D	1783C	LOC-6D	1797B	LOC-5D4
1759C	LOC-6D	1772B	LOC-6D	1784A	LOC-6D	1798A	LOC-6D

Table E.3 Cable Routing Points to Location Mapping (Continued)

Routing Pt	Location	Routing Pt	Location	Routing Pt	Location	Routing Pt	Location
1798B	LOC-6D	1815B	LOC-5D4	1826J	LOC-5C11	1839D	LOC-5C11
1799A	LOC-6D	1815C	LOC-5D4	1827B	LOC-5C11	1839E	LOC-5C11
1799B	LOC-6D	1816A	LOC-5D4	1827C	LOC-5C11	1839F	LOC-5C11
179B	LOC-5C11-4	1816B	LOC-5D4	1827F	LOC-5C11	183B	LOC-5C11-4
179D	LOC-5C11-4	1816C	LOC-5D4	1827J	LOC-5C11	183D	LOC-5C11-4
1800A	LOC-6D	1817A	LOC-5D4	1828B	LOC-5C11	1840D	LOC-5C11
1800B	LOC-6D	1817B	LOC-5D4	1828C	LOC-5C11	1840E	LOC-5C11
1801A	LOC-6D	1817C	LOC-5D4	1828F	LOC-5C11	1840F	LOC-5C11
1801B	LOC-6D	1818A	LOC-5C11	1829B	LOC-5C11	1841BE	LOC-5C11
1802A	LOC-6D	1818B	LOC-5C11	1829F	LOC-5C11	1841CD	LOC-5C11
1802B	LOC-6D	1818C	LOC-5C11	1829L	LOC-5C11	1841F	LOC-5C11
1802C	LOC-6D	1819A	LOC-5C11	182B	LOC-5C11-4	1842DK	LOC-5C11
1803A	LOC-6D	1819B	LOC-5C11	182D	LOC-5C11-4	1843K	LOC-5C11
1803B	LOC-6D	1819C	LOC-5C11	1830B	LOC-5C11	1844J	LOC-5C11
1803C	LOC-6D	181B	LOC-5C11-4	1830F	LOC-5C11	1844K	LOC-5C11
1804A	LOC-5D4	181D	LOC-5C11-4	1830L	LOC-5C11	1845J	LOC-5C11
1804B	LOC-5D4	1820A	LOC-5C11	1831B	LOC-5C11	1845K	LOC-5C11
1805A	LOC-5D4	1820B	LOC-5C11	1831F	LOC-5C11	1846BH	LOC-5C11
1805B	LOC-5D4	1820C	LOC-5C11	1831L	LOC-5C11	1846DJ	LOC-5C11
1806C	LOC-5D4	1821A	LOC-5C11	1832B	LOC-5C11	1847G	LOC-5C11
1807A	LOC-5D4	1821B	LOC-5C11	1832F	LOC-5C11	1847H	LOC-5C11
1807B	LOC-5D4	1821C	LOC-5C11	1833B	LOC-5C11	1847J	LOC-5C11
1808A	LOC-5D4	1822A	LOC-5C11	1833F	LOC-5C11	1848G	LOC-5C11
1808B	LOC-5D4	1822B	LOC-5C11	1834B	LOC-5C11	1848H	LOC-5C11
1809A	LOC-5D4	1822C	LOC-5C11	1834F	LOC-5C11	1848J	LOC-5C11
1809B	LOC-5D4	1823A	LOC-5C11	1835B	LOC-5C11	1849G	LOC-5C11
180B	LOC-5C11-4	1823B	LOC-5C11	1835F	LOC-5C11	1849H	LOC-5C11
180D	LOC-5C11-4	1823C	LOC-5C11	1836D	LOC-5C11	1849J	LOC-5C11
1810C	LOC-5D4	1823P	LOC-5C11	1836E	LOC-5C11	1849K	LOC-5C11
1811C	LOC-5D4	1824B	LOC-5C11	1836F	LOC-5C11	184B	LOC-5C11-4
1812C	LOC-5D4	1824C	LOC-5C11	1837D	LOC-5C11	184D	LOC-5C11-4
1813C	LOC-5D4	1825B	LOC-5C11	1837E	LOC-5C11	1850G	LOC-5C11
1814A	LOC-5D4	1825C	LOC-5C11	1837F	LOC-5C11	1850H	LOC-5C11
1814B	LOC-5D4	1826B	LOC-5C11	1838D	LOC-5C11	1850N	LOC-5C11
1814C	LOC-5D4	1826C	LOC-5C11	1838E	LOC-5C11	1851G	LOC-5C11
1815A	LOC-5D4	1826F	LOC-5C11	1838F	LOC-5C11	1851H	LOC-5C11

Table E.3 Cable Routing Points to Location Mapping (Continued)

Routing Pt	Location	Routing Pt	Location	Routing Pt	Location	Routing Pt	Location
1851N	LOC-5C11	1865L	LOC-5C11	1886D	LOC-5C11	1900F	LOC-5C11
1852CG	LOC-5C11	1865M	LOC-5C11	1887J	LOC-5C11	1901B	LOC-5C11
1852H	LOC-5C11	1865P	LOC-5C11	1888C	LOC-5C11	1901F	LOC-5C11
1852M	LOC-5C11	1866L	LOC-5C11	1889C	LOC-5C11	1902B	LOC-5C11
1853C	LOC-5C11	1867F	LOC-5C11	1889E	LOC-5C11	1902F	LOC-5C11
1853H	LOC-5C11	1867L	LOC-5C11	188D	LOC-5C11	1903B	LOC-5C11
1853M	LOC-5C11	1868BP	LOC-5C11	188E	LOC-5C11	1903H	LOC-5C11
1854C	LOC-5C11	1869P	LOC-5C11	188F	LOC-5C11	1903J	LOC-5C11
1854H	LOC-5C11	186D	LOC-5C11-4	1890C	LOC-5C11	1903M	LOC-5C11
1854M	LOC-5C11	186E	LOC-5C11-4	1891D	LOC-5C11	1904B	LOC-5C11
1855C	LOC-5C11	186F	LOC-5C11-4	1891E	LOC-5C11	1904H	LOC-5C11
1855H	LOC-5C11	1870M	LOC-5C11	1892D	LOC-5C11	1904J	LOC-5C11
1855M	LOC-5C11	1870P	LOC-5C11	1893B	LOC-5C11	1904M	LOC-5C11
1856C	LOC-5C11	1871G	LOC-5C11	1893F	LOC-5C11	1905B	LOC-5C11
1856H	LOC-5C11	1872H	LOC-5C11	1893L	LOC-5C11	1905H	LOC-5C11
1856L	LOC-5C11	1873N	LOC-5C11	1894B	LOC-5C11	1905J	LOC-5C11
1856M	LOC-5C11	1874J	LOC-5C11	1894F	LOC-5C11	1905M	LOC-5C11
1857C	LOC-5C11	1874K	LOC-5C11	1894J	LOC-5C11	1906B	LOC-5C11
1857H	LOC-5C11	1875J	LOC-5C11	1895B	LOC-5C11	1906H	LOC-5C11
1857M	LOC-5C11	1875K	LOC-5C11	1895F	LOC-5C11	1906J	LOC-5C11
1858H	LOC-5C11	1876J	LOC-5C11	1895J	LOC-5C11	1907B	LOC-5C11
1858M	LOC-5C11	1876K	LOC-5C11	1896B	LOC-5C11	1907H	LOC-5C11
1859BN	LOC-5C11	1877J	LOC-5C11	1896F	LOC-5C11	1907J	LOC-5C11
185B	LOC-5C11-4	1877K	LOC-5C11	1896J	LOC-5C11	1908H	LOC-5C11
185D	LOC-5C11-4	1878K	LOC-5C11	1897B	LOC-5C11	1909B	LOC-5C11
1860N	LOC-5C11	1879K	LOC-5C11	1897F	LOC-5C11	1909F	LOC-5C11
1861L	LOC-5C11	187D	LOC-5C11	1897J	LOC-5C11	1909J	LOC-5C11
1861N	LOC-5C11	187E	LOC-5C11	1897K	LOC-5C11	190AB	LOC-5C11-4
1862L	LOC-5C11	187F	LOC-5C11	1898FM	LOC-5C11	190CD	LOC-5C11-4
1862N	LOC-5C11	1880M	LOC-5C11	1898J	LOC-5C11	1910B	LOC-5C11
1863L	LOC-5C11	1881P	LOC-5C11	1899B	LOC-5C11	1910F	LOC-5C11
1863M	LOC-5C11	1882P	LOC-5C11	1899F	LOC-5C11	1910J	LOC-5C11
1863P	LOC-5C11	1883N	LOC-5C11	1899J	LOC-5C11	1911B	LOC-5C11
1864L	LOC-5C11	1884N	LOC-5C11	189B	LOC-5C11-4	1911F	LOC-5C11
1864M	LOC-5C11	1885A	LOC-5C11	189D	LOC-5C11-4	1911J	LOC-5C11
1864P	LOC-5C11	1886B	LOC-5C11	1900B	LOC-5C11	1912B	LOC-5C11

Table E.3 Cable Routing Points to Location Mapping (Continued)

Routing Pt	Location	Routing Pt	Location	Routing Pt	Location	Routing Pt	Location
1912F	LOC-5C11	1929B	LOC-5B2	1945C	LOC-5B2	1959A	LOC-5C11-6
1913B	LOC-5C11	1929F	LOC-5B2	1945K	LOC-5B2	1959C	LOC-5C11-6
1914B	LOC-5C11	192D	LOC-5C11-4	1946A	LOC-5B2	195BF	LOC-5C11
1914F	LOC-5C11	1930B	LOC-5B2	1946C	LOC-5B2	1960A	LOC-5C11-6
1914K	LOC-5C11	1930F	LOC-5B2	1946K	LOC-5B2	1960C	LOC-5C11-6
1915B	LOC-5C11	1931B	LOC-5B2	1947A	LOC-5B2	1961A	LOC-5C11-6
1915F	LOC-5C11	1931F	LOC-5B2	1947C	LOC-5B2	1961C	LOC-5C11-6
1915K	LOC-5C11	1932B	LOC-5B2	1947K	LOC-5B2	1962K	LOC-5B2
1916B	LOC-5C11	1932F	LOC-5B2	1948A	LOC-5B2	1963K	LOC-5B2
1916F	LOC-5C11	1933B	LOC-5C11-6	1948C	LOC-5B2	1964F	LOC-5B2
1916K	LOC-5C11	1933F	LOC-5C11-6	1948K	LOC-5B2	1964K	LOC-5B2
1917B	LOC-5C11	1934B	LOC-5C11-6	1949A	LOC-5B2	1965F	LOC-5B2
1917F	LOC-5C11	1934F	LOC-5C11-6	1949C	LOC-5B2	1965K	LOC-5B2
1917K	LOC-5C11	1935B	LOC-5C11-6	1949K	LOC-5B2	1966B	LOC-5B2
1918B	LOC-5C11	1935F	LOC-5C11-6	194BG	LOC-5C11	1966F	LOC-5B2
1918F	LOC-5C11	1936B	LOC-5C11-6	1950A	LOC-5B2	1967B	LOC-5B2
1919B	LOC-5B2	1936F	LOC-5C11-6	1950C	LOC-5B2	1967F	LOC-5B2
1919F	LOC-5B2	1937B	LOC-5C11-6	1950K	LOC-5B2	1968K	LOC-5B2
191CD	LOC-5C11-4	1937F	LOC-5C11-6	1951A	LOC-5B2	1969K	LOC-5B2
1920B	LOC-5B2	1938B	LOC-5C11-6	1951C	LOC-5B2	196B	LOC-5C11
1920F	LOC-5B2	1938F	LOC-5C11-6	1951K	LOC-5B2	196D	LOC-5C11
1921B	LOC-5B2	1939B	LOC-5C11-6	1952A	LOC-5B2	1970K	LOC-5B2
1922B	LOC-5B2	1939F	LOC-5C11-6	1952C	LOC-5B2	1971F	LOC-5B2
1922F	LOC-5B2	193G	LOC-5C11-4	1952K	LOC-5B2	1972F	LOC-5B2
1923B	LOC-5B2	1940B	LOC-5C11-6	1953A	LOC-5B2	1973A	LOC-5C11-6
1923F	LOC-5B2	1940F	LOC-5C11-6	1953C	LOC-5B2	1973C	LOC-5C11-6
1924B	LOC-5B2	1941B	LOC-5C11-6	1954A	LOC-5B2	1974A	LOC-5C11-6
1924F	LOC-5B2	1941F	LOC-5C11-6	1954C	LOC-5B2	1974B	LOC-5C11-6
1925B	LOC-5B2	1942K	LOC-5B2	1955A	LOC-5C11-6	1974C	LOC-5C11-6
1925F	LOC-5B2	1943A	LOC-5B2	1955C	LOC-5C11-6	1974D	LOC-5C11-6
1926B	LOC-5B2	1943C	LOC-5B2	1956A	LOC-5C11-6	1975B	LOC-5C11-6
1926F	LOC-5B2	1943K	LOC-5B2	1956C	LOC-5C11-6	1975D	LOC-5C11-6
1927B	LOC-5B2	1944A	LOC-5B2	1957A	LOC-5C11-6	1976B	LOC-5C11-6
1927F	LOC-5B2	1944C	LOC-5B2	1957C	LOC-5C11-6	1976D	LOC-5C11-6
1928B	LOC-5B2	1944K	LOC-5B2	1958A	LOC-5C11-6	1977B	LOC-5C11-6
1928F	LOC-5B2	1945A	LOC-5B2	1958C	LOC-5C11-6	1977F	LOC-5C11-6

Table E.3 Cable Routing Points to Location Mapping (Continued)

Routing Pt	Location	Routing Pt	Location	Routing Pt	Location	Routing Pt	Location
1978B	LOC-5C11-6	1996A	LOC-5B2	2005D	LOC-5B4	2015A	LOC-5B2
1978F	LOC-5C11-6	1996B	LOC-5B2	2006A	LOC-5B4	2015B	LOC-5B2
1979B	LOC-5C11-5	1996C	LOC-5B2	2006B	LOC-5B4	2015C	LOC-5B2
1979D	LOC-5C11-5	1996D	LOC-5B2	2007A	LOC-5B4	2015D	LOC-5B2
197B	LOC-5C11	1997A	LOC-5B2	2007B	LOC-5B4	2016A	LOC-5B2
197D	LOC-5C11	1997B	LOC-5B2	2007C	LOC-5B4	2016B	LOC-5B2
1980B	LOC-5C11-5	1997C	LOC-5B2	2007D	LOC-5B4	2016C	LOC-5B2
1980D	LOC-5C11-5	1997D	LOC-5B2	2008A	LOC-5B4	2016D	LOC-5B2
1981B	LOC-5C11-5	1998A	LOC-5B2	2008B	LOC-5B4	2017B	LOC-5B2
1981D	LOC-5C11-5	1998B	LOC-5B2	2008C	LOC-5B4	2017C	LOC-5B2
1982B	LOC-5C11-5	1998C	LOC-5B2	2008D	LOC-5B4	2017D	LOC-5B2
1982D	LOC-5C11-5	1998D	LOC-5B2	2009B	LOC-5B4	2018A	LOC-5B2
1983B	LOC-5C11-5	1999A	LOC-5B2	2009C	LOC-5B4	2018B	LOC-5B2
1983D	LOC-5C11-5	1999B	LOC-5B2	2009D	LOC-5B4	2018C	LOC-5B2
1984B	LOC-5C11-5	1999D	LOC-5B2	200B	LOC-5C11	2018D	LOC-5B2
1984D	LOC-5C11-5	199B	LOC-5C11	200D	LOC-5C11	2019A	LOC-5B2
1985B	LOC-5C11-5	199D	LOC-5C11	2010A	LOC-5B2	2019B	LOC-5B2
1985D	LOC-5C11-5	2000A	LOC-5B3	2010B	LOC-5B2	2019C	LOC-5B2
1986B	LOC-5C11-5	2000C	LOC-5B3	2010C	LOC-5B2	2019D	LOC-5B2
1987D	LOC-5C11-5	2001B	LOC-5B3	2010D	LOC-5B2	201B	LOC-5C11
1988D	LOC-5C11-5	2001D	LOC-5B3	2011A	LOC-5B2	2020A	LOC-5B2
1989B	LOC-5C11-5	2002A	LOC-5B3	2011B	LOC-5B2	2020B	LOC-5B2
1989D	LOC-5C11-5	2002B	LOC-5B3	2011C	LOC-5B2	2020C	LOC-5B2
198B	LOC-5C11	2002C	LOC-5B3	2011D	LOC-5B2	2020D	LOC-5B2
1990A	LOC-5C11-5	2002D	LOC-5B3	2012A	LOC-5B2	2021A	LOC-5B2
1990C	LOC-5C11-5	2003A	LOC-5B4	2012B	LOC-5B2	2021B	LOC-5B2
1991A	LOC-5C11-5	2003B	LOC-5B4	2012C	LOC-5B2	2021C	LOC-5B2
1991C	LOC-5C11-5	2003C	LOC-5B4	2012D	LOC-5B2	2022D	LOC-5B2
1992A	LOC-5C11-5	2003D	LOC-5B4	2013A	LOC-5B2	2023D	LOC-5B2
1992C	LOC-5C11-5	2004A	LOC-5B4	2013B	LOC-5B2	2024A	LOC-5B2
1993A	LOC-5C11-5	2004B	LOC-5B4	2013C	LOC-5B2	2024B	LOC-5B2
1993C	LOC-5C11-5	2004C	LOC-5B4	2013D	LOC-5B2	2024C	LOC-5B2
1994A	LOC-5C11-5	2004D	LOC-5B4	2014A	LOC-5B2	2024D	LOC-5B2
1994C	LOC-5C11-5	2005A	LOC-5B4	2014B	LOC-5B2	2025A	LOC-5B2
1995A	LOC-5C11-5	2005B	LOC-5B4	2014C	LOC-5B2	2025C	LOC-5B2
1995C	LOC-5C11-5	2005C	LOC-5B4	2014D	LOC-5B2	2025D	LOC-5B2

Table E.3 Cable Routing Points to Location Mapping (Continued)

Routing Pt	Location	Routing Pt	Location	Routing Pt	Location	Routing Pt	Location
2026A	LOC-5B2	2037B	LOC-5B6	2046B	LOC-5B6	2055E	LOC-5B6
2026C	LOC-5B2	2037C	LOC-5B6	2046C	LOC-5B6	2056B	LOC-5B6
2026D	LOC-5B2	2037D	LOC-5B6	2046D	LOC-5B6	2056C	LOC-5B6
2027A	LOC-5B2	2038A	LOC-5B6	2047B	LOC-5B6	2056D	LOC-5B6
2027C	LOC-5B2	2038B	LOC-5B6	2047D	LOC-5B6	2056E	LOC-5B6
2027D	LOC-5B2	2038C	LOC-5B6	2048B	LOC-5B6	2057B	LOC-5B6
2028A	LOC-5B2	2038D	LOC-5B6	2048C	LOC-5B6	2057C	LOC-5B6
2028C	LOC-5B2	2039A	LOC-5B6	2048D	LOC-5B6	2057D	LOC-5B6
2028D	LOC-5B2	2039B	LOC-5B6	2049B	LOC-5B6	2057E	LOC-5B6
2029A	LOC-5B2	2039C	LOC-5B6	2049C	LOC-5B6	2058B	LOC-5B6
2029C	LOC-5B2	2039D	LOC-5B6	2049D	LOC-5B6	2058C	LOC-5B6
2029D	LOC-5B2	203B	LOC-5C11	204B	LOC-4F3	2058D	LOC-5B6
202B	LOC-5C11	203D	LOC-5C11	204D	LOC-4F3	2058E	LOC-5B6
202D	LOC-5C11	2040A	LOC-5B6	2050B	LOC-5B6	2059B	LOC-5B6
2030A	LOC-5B2	2040B	LOC-5B6	2050C	LOC-5B6	2059C	LOC-5B6
2030C	LOC-5B2	2040C	LOC-5B6	2050D	LOC-5B6	2059D	LOC-5B6
2030D	LOC-5B2	2040D	LOC-5B6	2050E	LOC-5B6	2059E	LOC-5B6
2031A	LOC-5B2	2041A	LOC-5B6	2051B	LOC-5B6	205B	LOC-4F3
2031C	LOC-5B2	2041B	LOC-5B6	2051C	LOC-5B6	205D	LOC-4F3
2031D	LOC-5B2	2041C	LOC-5B6	2051D	LOC-5B6	2060B	LOC-5B6
2032A	LOC-5B2	2041D	LOC-5B6	2051E	LOC-5B6	2060C	LOC-5B6
2032C	LOC-5B2	2042A	LOC-5B6	2052B	LOC-5B6	2060D	LOC-5B6
2032D	LOC-5B2	2042B	LOC-5B6	2052C	LOC-5B6	2060E	LOC-5B6
2033A	LOC-5B2	2042C	LOC-5B6	2052D	LOC-5B6	2061AB	LOC-5B6
2033C	LOC-5B2	2042D	LOC-5B6	2052E	LOC-5B6	2061BC	LOC-5B6
2033D	LOC-5B2	2043A	LOC-5B6	2053B	LOC-5B6	2061CD	LOC-5B6
2034A	LOC-5B2	2043B	LOC-5B6	2053C	LOC-5B6	2061DE	LOC-5B6
2034C	LOC-5B2	2043C	LOC-5B6	2053D	LOC-5B6	2063B	LOC-5B6
2034D	LOC-5B2	2043D	LOC-5B6	2053E	LOC-5B6	2063D	LOC-5B6
2035A	LOC-5B2	2044B	LOC-5B6	2054B	LOC-5B6	2064B	LOC-5B6
2035C	LOC-5B2	2044D	LOC-5B6	2054C	LOC-5B6	2064C	LOC-5B6
2035D	LOC-5B2	2045A	LOC-5B6	2054D	LOC-5B6	2064D	LOC-5B6
2036A	LOC-5B6	2045B	LOC-5B6	2054E	LOC-5B6	2065B	LOC-5B6
2036C	LOC-5B6	2045C	LOC-5B6	2055B	LOC-5B6	2065C	LOC-5B6
2036D	LOC-5B6	2045D	LOC-5B6	2055C	LOC-5B6	2065D	LOC-5B6
2037A	LOC-5B6	2046A	LOC-5B6	2055D	LOC-5B6	2066B	LOC-5B6

Table E.3 Cable Routing Points to Location Mapping (Continued)

Routing Pt	Location	Routing Pt	Location	Routing Pt	Location	Routing Pt	Location
2066C	LOC-5B6	2074E	LOC-5B6	2088E	LOC-5B8	209D	LOC-4F3
2066D	LOC-5B6	2075B	LOC-5B2	2089C	LOC-5B6	2100B	LOC-5B6
2066E	LOC-5B6	2075C	LOC-5B2	2089E	LOC-5B6	2100C	LOC-5B6
2067B	LOC-5B6	2075D	LOC-5B2	208B	LOC-4F3	2101B	LOC-5B6
2067C	LOC-5B6	2075E	LOC-5B2	208D	LOC-4F3	2101C	LOC-5B6
2067D	LOC-5B6	2076B	LOC-5B2	2090C	LOC-5B6	2101E	LOC-5B6
2067E	LOC-5B6	2076C	LOC-5B2	2090E	LOC-5B6	2101F	LOC-5B6
2068B	LOC-5B6	2077B	LOC-5B2	2091C	LOC-5B6	2102E	LOC-5B6
2068C	LOC-5B6	2077C	LOC-5B2	2091CD	LOC-5B6	2102F	LOC-5B6
2068D	LOC-5B6	2078B	LOC-5B2	2091E	LOC-5B6	2103E	LOC-5B6
2068E	LOC-5B6	2078C	LOC-5B2	2092B	LOC-5B6	2103F	LOC-5B6
2069B	LOC-5B6	2079B	LOC-5B2	2092C	LOC-5B6	2104B	LOC-5B6
2069C	LOC-5B6	2079C	LOC-5B2	2092D	LOC-5B6	2104C	LOC-5B6
2069D	LOC-5B6	207B	LOC-4F3	2092E	LOC-5B6	2104D	LOC-5B6
2069E	LOC-5B6	207D	LOC-4F3	2093A	LOC-5B6	2105B	LOC-5B6
206B	LOC-4F3	2080B	LOC-5B2	2093B	LOC-5B6	2105D	LOC-5B6
206D	LOC-4F3	2080C	LOC-5B2	2093C	LOC-5B6	2105F	LOC-5B6
2070B	LOC-5B6	2080D	LOC-5B2	2093D	LOC-5B6	2105G	LOC-5B6
2070C	LOC-5B6	2081B	LOC-5B2	2094B	LOC-5B6	2106F	LOC-5B6
2070D	LOC-5B6	2081C	LOC-5B2	2094CD	LOC-5B6	2106G	LOC-5B6
2070E	LOC-5B6	2081D	LOC-5B2	2095B	LOC-5B6	2107B	LOC-5B6
2071B	LOC-5B6	2082B	LOC-5B2	2095CD	LOC-5B6	2107C	LOC-5B6
2071C	LOC-5B6	2082C	LOC-5B2	2095E	LOC-5B6	2107D	LOC-5B6
2071D	LOC-5B6	2082D	LOC-5B2	2095F	LOC-5B6	2107E	LOC-5B6
2071E	LOC-5B6	2083AB	LOC-5B2	2096E	LOC-5B6	2108B	LOC-5B6
2072B	LOC-5B6	2083C	LOC-5B2	2096F	LOC-5B6	2108C	LOC-5B6
2072C	LOC-5B6	2083D	LOC-5B2	2097E	LOC-5B6	2109B	LOC-5B6
2072D	LOC-5B6	2084C	LOC-5B6	2097F	LOC-5B6	2109C	LOC-5B6
2072E	LOC-5B6	2084E	LOC-5B6	2098A	LOC-5B6	210B	LOC-4F3
2073B	LOC-5B6	2085C	LOC-5B6	2098B	LOC-5B6	210D	LOC-4F3
2073C	LOC-5B6	2085E	LOC-5B6	2098C	LOC-5B6	2110AB	LOC-5B2
2073D	LOC-5B6	2086C	LOC-5B6	2098D	LOC-5B6	2110BC	LOC-5B2
2073E	LOC-5B6	2086E	LOC-5B6	2099B	LOC-5B6	2110CD	LOC-5B2
2074B	LOC-5B6	2087C	LOC-5B6	2099C	LOC-5B6	2110DE	LOC-5B2
2074C	LOC-5B6	2087E	LOC-5B6	2099D	LOC-5B6	2111A	LOC-5B2
2074D	LOC-5B6	2088C	LOC-5B8	209B	LOC-4F3	2111B	LOC-5B2

Table E.3 Cable Routing Points to Location Mapping (Continued)

Routing Pt	Location	Routing Pt	Location	Routing Pt	Location	Routing Pt	Location
2111C	LOC-5B2	2120C	LOC-5B6	2141E	LOC-5B4	2152A	LOC-5A3-5
2111D	LOC-5B2	2120D	LOC-5B6	2142A	LOC-5B4	2152B	LOC-5A3-5
2112C	LOC-5B2	2120E	LOC-5B6	2142B	LOC-5B4	2152C	LOC-5A3-5
2113A	LOC-5B6	2121C	LOC-5B6	2142D	LOC-5B4	2153A	LOC-5A3-5
2113B	LOC-5B6	2121E	LOC-5B6	2142E	LOC-5B4	2153B	LOC-5A3-5
2113C	LOC-5B6	2122C	LOC-5B6	2143A	LOC-5B4	2153C	LOC-5A3-5
2113D	LOC-5B6	2123E	LOC-5B6	2143B	LOC-5B4	2154A	LOC-5A3-5
2113E	LOC-5B6	2124C	LOC-5B4	2143D	LOC-5B4	2154B	LOC-5A3-5
2114A	LOC-5B6	2125C	LOC-5B4	2143E	LOC-5B4	2154C	LOC-5A3-5
2114B	LOC-5B6	2126C	LOC-5B4	2144A	LOC-5B4	2155A	LOC-5A3-5
2114C	LOC-5B6	2127C	LOC-5B4	2144B	LOC-5B4	2155B	LOC-5A3-5
2114D	LOC-5B6	2128C	LOC-5B4	2144D	LOC-5B4	2155C	LOC-5A3-5
2114E	LOC-5B6	2129C	LOC-5B4	2144E	LOC-5B4	2156A	LOC-5A3-5
2115AB	LOC-5B6	212B	LOC-4F3	2145B	LOC-5B4	2156B	LOC-5A3-5
2115B	LOC-5B6	212D	LOC-4F3	2146A	LOC-5B4	2156C	LOC-5A3-5
2115CD	LOC-5B6	2130B	LOC-5B4	2146B	LOC-5B4	2157A	LOC-5A3-5
2115D	LOC-5B6	2131B	LOC-5B4	2146D	LOC-5B4	2157B	LOC-5A3-5
2115E	LOC-5B6	2132A	LOC-5B4	2146E	LOC-5B4	2158A	LOC-5A3-5
2115F	LOC-5B6	2132B	LOC-5B4	2147A	LOC-5B4	2158B	LOC-5A3-5
2115G	LOC-5B6	2133B	LOC-5B4	2147B	LOC-5B4	2159A	LOC-5A3-5
2116B	LOC-5B6	2134B	LOC-5B4	2147D	LOC-5B4	2159B	LOC-5A3-5
2116D	LOC-5B6	2135B	LOC-5B4	2147E	LOC-5B4	215B	LOC-4F3
2116E	LOC-5B6	2136A	LOC-5B4	2148A	LOC-5A3-5	215D	LOC-4F3
2116F	LOC-5B6	2136B	LOC-5B4	2148B	LOC-5A3-5	2160A	LOC-5A3-5
2116G	LOC-5B6	2137A	LOC-5B4	2148C	LOC-5A3-5	2160B	LOC-5A3-5
2117B	LOC-5B6	2137B	LOC-5B4	2149A	LOC-5A3-5	2161A	LOC-5B4
2117D	LOC-5B6	2138A	LOC-5B4	2149B	LOC-5A3-5	2161B	LOC-5B4
2117E	LOC-5B6	2138B	LOC-5B4	2149C	LOC-5A3-5	2162A	LOC-5B4
2117F	LOC-5B6	2139A	LOC-5B4	214B	LOC-4F3	2162B	LOC-5B4
2117G	LOC-5B6	213B	LOC-4F3	214D	LOC-4F3	2163A	LOC-5A3-5
2118E	LOC-5B6	213D	LOC-4F3	2150A	LOC-5A3-5	2163B	LOC-5A3-5
2119B	LOC-5B6	2140A	LOC-5B4	2150B	LOC-5A3-5	2164A	LOC-5A3-5
2119D	LOC-5B6	2140B	LOC-5B4	2150C	LOC-5A3-5	2164B	LOC-5A3-5
211B	LOC-4F3	2141A	LOC-5B4	2151A	LOC-5A3-5	2165A	LOC-5A3-5
211D	LOC-4F3	2141B	LOC-5B4	2151B	LOC-5A3-5	2165B	LOC-5A3-5
2120B	LOC-5B6	2141D	LOC-5B4	2151C	LOC-5A3-5	2165C	LOC-5A3-5

Table E.3 Cable Routing Points to Location Mapping (Continued)

Routing Pt	Location	Routing Pt	Location	Routing Pt	Location	Routing Pt	Location
2166A	LOC-5A3-5	217D	LOC-5C11	219D	LOC-5C11	2219B	LOC-6E
2166B	LOC-5A3-5	2180A	LOC-5A3-5	2200A	LOC-5B6	221B	LOC-5C11
2166C	LOC-5A3-5	2180B	LOC-5A3-5	2201A	LOC-5B6	2221AB	LOC-5C11-6
2166D	LOC-5A3-5	2181A	LOC-5A3-2	2201B	LOC-5B6	2222H	LOC-5C11
2167A	LOC-5A3-5	2181B	LOC-5A3-2	2201C	LOC-5B6	2222M	LOC-5C11
2167B	LOC-5A3-5	2182A	LOC-5A3-5	2201D	LOC-5B6	222B	LOC-5C11
2168A	LOC-5A3-1	2182B	LOC-5A3-3	2202CE	LOC-6E	223D	LOC-5C11
2168B	LOC-5A3-1	2183A	LOC-5A3-3	2203A	LOC-6D	224B	LOC-4F3
2169B	LOC-5A3-1	2183B	LOC-5A3-3	2203B	LOC-6D	224D	LOC-4F3
216B	LOC-5C11	2186B	LOC-5B6	2204A	LOC-6D	225B	LOC-4F3
216D	LOC-5C11	2187C	LOC-6E	2204B	LOC-6D	225D	LOC-4F3
2170C	LOC-5A3-5	2188C	LOC-6E	2204D	LOC-6D	226B	LOC-4F3
2170D	LOC-5A3-5	2189C	LOC-6E	2204E	LOC-6D	226D	LOC-4F3
2171A	LOC-5A3-5	218B	LOC-5C11	2205D	LOC-6D	227B	LOC-4F3
2171B	LOC-5A3-5	218D	LOC-5C11	2205E	LOC-6D	227D	LOC-4F3
2171C	LOC-5A3-5	2190C	LOC-6E	2206D	LOC-6D	228B	LOC-4F3
2171D	LOC-5A3-5	2191BC	LOC-6E	2206E	LOC-6D	228D	LOC-4F3
2172A	LOC-5A3-1	2192BC	LOC-6E	2207A	LOC-5C11-6	2296A	LOC-5B3
2172B	LOC-5A3-1	2193A	LOC-5A3-5	2207C	LOC-5C11-6	2297B	LOC-5A3
2173B	LOC-5A3-1	2193B	LOC-5A3-5	2208C	LOC-5B6	229B	LOC-4F3
2173C	LOC-5A3-1	2193C	LOC-5A3-5	2209C	LOC-5B2	229D	LOC-4F3
2173D	LOC-5A3-1	2194A	LOC-5A3-5	220B	LOC-5C11	230B	LOC-4F3
2174C	LOC-5A3-1	2194B	LOC-5A3-5	2210A	LOC-6D	230D	LOC-4F3
2174D	LOC-5A3-1	2194C	LOC-5A3-5	2210B	LOC-6D	231B	LOC-4F3
2175BD	LOC-5A3-1	2195A	LOC-5B4	2211A	LOC-6D	231D	LOC-4F3
2176B	LOC-5A3-5	2195B	LOC-5B4	2211B	LOC-6D	232B	LOC-4F3
2176C	LOC-5A3-5	2197B	LOC-5B6	2212E	LOC-5C11-5	232D	LOC-4F3
2177A	LOC-5A3-5	2197C	LOC-5B6	2213E	LOC-5C11-5	233B	LOC-4F3
2177B	LOC-5A3-5	2197D	LOC-5B6	2214B	LOC-5C11-5	233D	LOC-4F3
2177D	LOC-5A3-5	2198A	LOC-6E	2214E	LOC-5C11-5	234B	LOC-4F3
2177E	LOC-5A3-5	2198B	LOC-6E	2215E	LOC-5C11-5	234D	LOC-4F3
2178D	LOC-5A3-5	2199A	LOC-6E	2216B	LOC-5C11-5	235B	LOC-4F3
2178E	LOC-5A3-5	2199B	LOC-6E	2216D	LOC-5C11-5	235D	LOC-4F3
2179A	LOC-5A3-5	2199E	LOC-6E	2217A	LOC-6E	236B	LOC-4F3
2179B	LOC-5A3-5	2199F	LOC-6E	2218A	LOC-6E	236D	LOC-4F3
217B	LOC-5C11	219B	LOC-5C11	2218B	LOC-6E	237B	LOC-4F3

Table E.3 Cable Routing Points to Location Mapping (Continued)

Routing Pt	Location	Routing Pt	Location	Routing Pt	Location	Routing Pt	Location
237D	LOC-4F3	2414B	LOC-9A	243C	LOC-4F3	261A	LOC-4F3
238B	LOC-4F3	2415A	LOC-9A	2440A	LOC-6E	261C	LOC-4F3
238D	LOC-4F3	2415B	LOC-9A	2440B	LOC-6E	2620A	LOC-5B2
239B	LOC-4F3	2416A	LOC-9A	244A	LOC-4F3	262A	LOC-4F3
239D	LOC-4F3	2416B	LOC-9A	244C	LOC-4F3	262C	LOC-4F3
2400A	LOC-9A	2417A	LOC-9A	245C	LOC-4F3	262F	LOC-4F3
2400B	LOC-9A	2417B	LOC-9A	246A	LOC-4F3	263A	LOC-4F3
2401A	LOC-9A	2418A	LOC-9A	246C	LOC-4F3	263C	LOC-4F3
2401B	LOC-9A	2418B	LOC-9A	247A	LOC-4F3	263F	LOC-4F3
2402A	LOC-9A	2419A	LOC-9A	247C	LOC-4F3	264A	LOC-4F3
2402B	LOC-9A	2419B	LOC-9A	248A	LOC-4F3	264C	LOC-4F3
2403A	LOC-9A	241A	LOC-4F3	248C	LOC-4F3	264F	LOC-4F3
2403B	LOC-9A	241C	LOC-4F3	249A	LOC-4F3	265A	LOC-4F3
2404A	LOC-9A	2420AB	LOC-5B6	249C	LOC-4F3	265C	LOC-4F3
2404B	LOC-9A	2420BC	LOC-5B6	250A	LOC-4F3	265F	LOC-4F3
2405A	LOC-9A	2421A	LOC-9A	250C	LOC-4F3	266A	LOC-4F3
2405B	LOC-9A	2421B	LOC-9A	251A	LOC-4F3	266C	LOC-4F3
2406A	LOC-9A	2422A	LOC-9A	251C	LOC-4F3	266F	LOC-4F3
2406B	LOC-9A	2422B	LOC-9A	252A	LOC-4F3	267A	LOC-4F3
2407A	LOC-9A	2423A	LOC-9A	252C	LOC-4F3	267C	LOC-4F3
2407B	LOC-9A	2423B	LOC-9A	253A	LOC-4F3	267F	LOC-4F3
2408A	LOC-9A	2424B	LOC-9A	253C	LOC-4F3	268A	LOC-4F3
2408B	LOC-9A	242A	LOC-4F3	254A	LOC-4F3	268C	LOC-4F3
2409A	LOC-9A	242C	LOC-4F3	254C	LOC-4F3	269A	LOC-4F3
2409B	LOC-9A	2434B	LOC-5B4	255A	LOC-4F3	269C	LOC-4F3
240A	LOC-4F3	2435A	LOC-5A3-5	255C	LOC-4F3	270A	LOC-4F3
240C	LOC-4F3	2435B	LOC-5A3-5	256A	LOC-4F3	270C	LOC-4F3
2410A	LOC-9A	2436A	LOC-5A3-4	256C	LOC-4F3	271A	LOC-4F3
2410B	LOC-9A	2436B	LOC-5A3-4	257A	LOC-4F3	272B	LOC-4F3
2411A	LOC-9A	2437A	LOC-5A3-4	257C	LOC-4F3	273A	LOC-4F3
2411B	LOC-9A	2437B	LOC-5A3-4	258A	LOC-4F3	273B	LOC-4F3
2412A	LOC-9A	2438A	LOC-5A3-4	258C	LOC-4F3	273C	LOC-4F3
2412B	LOC-9A	2438B	LOC-5A3-4	259A	LOC-4F3	274A	LOC-4F2
2413A	LOC-9A	2439E	LOC-6E	259C	LOC-4F3	274B	LOC-4F2
2413B	LOC-9A	2439F	LOC-6E	260A	LOC-4F3	275AC	LOC-4F2
2414A	LOC-9A	243A	LOC-4F3	260C	LOC-4F3	275BD	LOC-4F2

Table E.3 Cable Routing Points to Location Mapping (Continued)

Routing Pt	Location	Routing Pt	Location	Routing Pt	Location	Routing Pt	Location
276A	LOC-4F2	290A	LOC-5C11-4	305D	LOC-4F2	324B	LOC-5B10
276B	LOC-4F2	290C	LOC-5C11-4	306D	LOC-4F2	324C	LOC-5B10
276C	LOC-4F2	291R	LOC-4F2	307AD	LOC-4F2	324D	LOC-5B10
276D	LOC-4F2	292A	LOC-4F2	308A	LOC-4F2	325A	LOC-5B10
277A	LOC-4F2	292C	LOC-4F2	308C	LOC-4F2	325B	LOC-5B10
277C	LOC-4F2	292R	LOC-4F2	309A	LOC-4F2	325C	LOC-5B10
277D	LOC-4F2	293A	LOC-4F2	309C	LOC-4F2	325D	LOC-5B10
278A	LOC-4F2	293C	LOC-4F2	310A	LOC-4F2	326A	LOC-5B13-2
278B	LOC-4F2	293R	LOC-4F2	310C	LOC-4F2	326B	LOC-5B13-2
278C	LOC-4F2	294A	LOC-4F2	311B	LOC-4F2	326C	LOC-5B13-2
278D	LOC-4F2	294C	LOC-4F2	311D	LOC-4F2	326D	LOC-5B13-2
279A	LOC-4F2	295A	LOC-4F2	312B	LOC-4F2	327A	LOC-5B13-2
279B	LOC-4F2	295C	LOC-4F2	312D	LOC-4F2	327B	LOC-5B13-2
279C	LOC-4F2	296A	LOC-4F2	313BE	LOC-5C11-4	327C	LOC-5B13-2
279D	LOC-4F2	296C	LOC-4F2	313DF	LOC-5C11-4	327D	LOC-5B13-2
279R	LOC-4F2	297A	LOC-4F2	314B	LOC-5C11-5	328A	LOC-5B13-2
280B	LOC-4F2	297B	LOC-4F2	314D	LOC-5C11-5	328B	LOC-5B13-2
280D	LOC-4F2	297C	LOC-4F2	315A	LOC-8A1	328C	LOC-5B13-2
281A	LOC-4F2	297D	LOC-4F2	315B	LOC-8A1	328D	LOC-5B13-2
281C	LOC-4F2	298A	LOC-4F2	316A	LOC-8A1	329A	LOC-5B13-2
282A	LOC-4F2	298B	LOC-4F2	316B	LOC-8A1	329B	LOC-5B13-2
282C	LOC-4F2	298C	LOC-4F2	318A	LOC-8A1	329C	LOC-5B13-2
283A	LOC-4F2	298D	LOC-4F2	318B	LOC-8A1	329D	LOC-5B13-2
283C	LOC-4F2	299A	LOC-4F2	319A	LOC-8A2	330B	LOC-5B13-2
284A	LOC-4F2	299C	LOC-4F2	319B	LOC-8A2	330C	LOC-5B13-2
284C	LOC-4F2	300A	LOC-4F2	320A	LOC-8A2	330D	LOC-5B13-2
285A	LOC-4F2	300C	LOC-4F2	320B	LOC-8A2	331C	LOC-5B13-2
285C	LOC-4F2	301B	LOC-4F2	321A	LOC-8A2	331D	LOC-5B13-2
286A	LOC-4F2	301D	LOC-4F2	321B	LOC-8A2	332D	LOC-5B13-2
286C	LOC-4F2	302B	LOC-4F2	322A	LOC-8A2	333A	LOC-5B13-2
287A	LOC-5C11-4	302D	LOC-4F2	322B	LOC-8A2	333B	LOC-5B13-2
287C	LOC-5C11-4	303B	LOC-4F2	323A	LOC-5B10	334A	LOC-5B13-2
288A	LOC-5C11-4	303D	LOC-4F2	323B	LOC-5B10	334B	LOC-5B13-2
288C	LOC-5C11-4	304B	LOC-4F2	323C	LOC-5B10	335A	LOC-5B13-2
289A	LOC-5C11-4	304D	LOC-4F2	323D	LOC-5B10	335B	LOC-5B13-2
289C	LOC-5C11-4	305B	LOC-4F2	324A	LOC-5B10	336A	LOC-5B13-2

Table E.3 Cable Routing Points to Location Mapping (Continued)

Routing Pt	Location	Routing Pt	Location	Routing Pt	Location	Routing Pt	Location
336B	LOC-5B13-2	353F	LOC-5B13-2	368E	LOC-5B13-2	388G	LOC-4E2-1
337A	LOC-5B13-2	354D	LOC-5B13-2	368F	LOC-5B13-2	389D	LOC-4E2-1
337B	LOC-5B13-2	354E	LOC-5B13-2	369D	LOC-5B13-2	389G	LOC-4E2-1
338A	LOC-5B13-2	354F	LOC-5B13-2	369E	LOC-5B13-2	390C	LOC-4E2-1
338B	LOC-5B13-2	354G	LOC-5B13-2	369F	LOC-5B13-2	390D	LOC-4E2-1
339B	LOC-5B13-2	355DG	LOC-5B13-2	369H	LOC-5B13-2	390G	LOC-4E2-1
340A	LOC-5B13-2	356G	LOC-5B13-2	370D	LOC-5B13-2	391C	LOC-4E2-1
340B	LOC-5B13-2	356H	LOC-5B13-2	371D	LOC-5B13-2	392C	LOC-4E2-1
341A	LOC-5B13-2	357G	LOC-5B13-2	371G	LOC-5B13-2	393C	LOC-4E2-1
341B	LOC-5B13-2	357H	LOC-5B13-2	372D	LOC-5B13-3	394D	LOC-4E2-1
342B	LOC-5B13-2	358G	LOC-5B13-2	372G	LOC-5B13-3	394G	LOC-4E2-1
343BF	LOC-5B13-2	358H	LOC-5B13-2	373D	LOC-5B13-2	395D	LOC-4E2-1
344B	LOC-5B13-2	359G	LOC-5B13-2	374CD	LOC-5B13-2	395G	LOC-4E2-1
344F	LOC-5B13-2	359H	LOC-5B13-2	375D	LOC-5B13-2	396D	LOC-4E2-1
345B	LOC-5B13-2	360H	LOC-5B13-2	376D	LOC-5B13-2	396G	LOC-4E2-1
345F	LOC-5B13-2	361G	LOC-5B13-2	377D	LOC-5B13-2	397D	LOC-4E2-1
346B	LOC-5B13-2	362H	LOC-5B13-2	378D	LOC-5B13-2	397G	LOC-4E2-1
346C	LOC-5B13-2	363G	LOC-5B13-2	379D	LOC-5B13-2	398D	LOC-4E2-1
347A	LOC-5B13-2	364G	LOC-5B13-2	379GH	LOC-5B13-2	398G	LOC-4E2-1
347B	LOC-5B13-2	365A	LOC-5B13-2	380D	LOC-4E2-1	399D	LOC-4E2-1
347C	LOC-5B13-2	365B	LOC-5B13-2	380G	LOC-4E2-1	399G	LOC-4E2-1
348A	LOC-5B13-2	365C	LOC-5B13-2	381D	LOC-4E2-1	400D	LOC-4E2-1
348B	LOC-5B13-2	366A	LOC-5B13-3	381G	LOC-4E2-1	400G	LOC-4E2-1
348C	LOC-5B13-2	366B	LOC-5B13-3	382D	LOC-4E2-1	401C	LOC-4E2-1
349A	LOC-5B13-2	366C	LOC-5B13-3	382G	LOC-4E2-1	401D	LOC-4E2-1
349B	LOC-5B13-2	366D	LOC-5B3	383D	LOC-4E2-1	401G	LOC-4E2-1
349C	LOC-5B13-2	366E	LOC-5B13-3	383G	LOC-4E2-1	402A	LOC-4F2
350A	LOC-5B13-2	366F	LOC-5B13-3	384D	LOC-4E2-1	402C	LOC-4F2
350B	LOC-5B13-2	366G	LOC-5B3	384G	LOC-4E2-1	402R	LOC-4F2
350C	LOC-5B13-2	366H	LOC-5B3	385D	LOC-4E2-1	403C	LOC-4E2-1
351F	LOC-5B13-2	367D	LOC-5B13-2	385G	LOC-4E2-1	403D	LOC-4E2-1
352D	LOC-5B13-2	367E	LOC-5B13-2	386D	LOC-4E2-1	403G	LOC-4E2-1
352E	LOC-5B13-2	367F	LOC-5B13-2	386G	LOC-4E2-1	404D	LOC-4E2-2
352F	LOC-5B13-2	367G	LOC-5B13-2	387D	LOC-4E2-1	404G	LOC-4E2-2
353D	LOC-5B13-2	367H	LOC-5B13-2	387G	LOC-4E2-1	405D	LOC-4E2-2
353E	LOC-5B13-2	368D	LOC-5B13-2	388D	LOC-4E2-1	405G	LOC-4E2-2

Table E.3 Cable Routing Points to Location Mapping (Continued)

Routing Pt	Location	Routing Pt	Location	Routing Pt	Location	Routing Pt	Location
406D	LOC-4E2-2	423J	LOC-4E2-2	442J	LOC-4E2-1	462D	LOC-4E4
406G	LOC-4E2-2	424B	LOC-4E2-1	443B	LOC-4E2-1	463B	LOC-4E4
407D	LOC-4E2-1	424J	LOC-4E2-1	443J	LOC-4E2-1	463D	LOC-4E4
407G	LOC-4E2-1	425B	LOC-4E2-1	444B	LOC-4E2-1	464E	LOC-4E4
408D	LOC-4E2-1	425J	LOC-4E2-1	444J	LOC-4E2-1	465E	LOC-4E4
408G	LOC-4E2-1	426B	LOC-4E4	445B	LOC-4E2-1	466A	LOC-4E4
409C	LOC-4E2-1	427B	LOC-4E2-1	445J	LOC-4E2-1	467A	LOC-4E4
409D	LOC-4E2-1	427J	LOC-4E2-1	446B	LOC-4E2-1	467E	LOC-4E4
409G	LOC-4E2-1	428B	LOC-4E2-1	447B	LOC-4E2-1	468A	LOC-4E4
410C	LOC-4E2-2	428J	LOC-4E2-1	448G	LOC-4E2-2	468C	LOC-4E4
410D	LOC-4E2-2	429B	LOC-4E2-1	449G	LOC-4E2-1	468E	LOC-4E4
410G	LOC-4E2-2	429J	LOC-4E2-1	450G	LOC-4E2-1	469A	LOC-4E4
411D	LOC-4E2-2	430B	LOC-4E2-2	451G	LOC-4E4	469C	LOC-4E4
411G	LOC-4E2-2	430J	LOC-4E2-2	452C	LOC-4E4	469E	LOC-4E4
412D	LOC-4E2-2	431B	LOC-4E2-2	452G	LOC-4E4	469R	LOC-4E4
413D	LOC-4E2-2	431J	LOC-4E2-2	453A	LOC-4E4	470A	LOC-4E4
413G	LOC-4E2-2	432B	LOC-4E2-1	453F	LOC-4E4	470C	LOC-4E4
414C	LOC-4E2-2	432J	LOC-4E2-1	454A	LOC-4E4	470E	LOC-4E4
414D	LOC-4E2-2	433B	LOC-4E2-1	454F	LOC-4E4	470R	LOC-4E4
414G	LOC-4E2-2	433J	LOC-4E2-1	454G	LOC-4E4	471A	LOC-4E4
415B	LOC-4E2-1	434B	LOC-4E2-1	455F	LOC-4E4	471C	LOC-4E4
415J	LOC-4E2-1	434J	LOC-4E2-1	455G	LOC-4E4	471E	LOC-4E4
416B	LOC-4E2-1	435B	LOC-4E2-1	456F	LOC-4E2-1	471R	LOC-4E4
416J	LOC-4E2-1	435J	LOC-4E2-1	456G	LOC-4E2-1	472C	LOC-4E4
417B	LOC-4E2-2	436B	LOC-4E2-1	457F	LOC-4E2-1	472E	LOC-4E4
417J	LOC-4E2-2	436J	LOC-4E2-1	458B	LOC-4E2-1	473C	LOC-4E4
418B	LOC-4E2-2	437B	LOC-4E2-1	458D	LOC-4E2-1	473D	LOC-4E4
418J	LOC-4E2-2	437J	LOC-4E2-1	458F	LOC-4E2-1	473E	LOC-4E4
419B	LOC-4E2-1	438B	LOC-4E2-1	459B	LOC-4E2-1	473F	LOC-4E4
419J	LOC-4E2-1	438J	LOC-4E2-1	459D	LOC-4E2-1	474CA	LOC-4E4
420B	LOC-4E2-1	439B	LOC-4E2-1	459F	LOC-4E2-1	474D	LOC-4E4
420J	LOC-4E2-1	439J	LOC-4E2-1	460B	LOC-4E2-1	475E	LOC-4E4
421J	LOC-4E4	440B	LOC-4E2-1	460D	LOC-4E2-1	475F	LOC-4E4
422B	LOC-4E2-2	440J	LOC-4E2-1	461D	LOC-4E4	476E	LOC-4E4
422J	LOC-4E2-2	441B	LOC-4E2-1	462B	LOC-4E4	476F	LOC-4E4
423B	LOC-4E2-2	441J	LOC-4E2-1	462C	LOC-4E4	477E	LOC-4E4

Table E.3 Cable Routing Points to Location Mapping (Continued)

Routing Pt	Location	Routing Pt	Location	Routing Pt	Location	Routing Pt	Location
477F	LOC-4E4	491B	LOC-4E4	507C	LOC-5A2	517A	LOC-5A4
478E	LOC-4E4	492A	LOC-4E4	507D	LOC-5A2	517B	LOC-5A4
478F	LOC-4E4	492B	LOC-4E4	508A	LOC-5A4	518A	LOC-5A4
479B	LOC-4E2-1	493A	LOC-4E4	508B	LOC-5A4	519B	LOC-4D2
480B	LOC-4E4	493B	LOC-4E4	508C	LOC-5A4	519E	LOC-4D2
480D	LOC-4E4	494A	LOC-4E4	508D	LOC-5A4	519F	LOC-4D2
480F	LOC-4E4	494B	LOC-4E4	509A	LOC-5A4	520B	LOC-5A4
481B	LOC-4E4	495H	LOC-4E4	509B	LOC-5A4	520E	LOC-5A4
482A	LOC-4E4	496AG	LOC-5B13-2	509C	LOC-5A4	520F	LOC-5A4
482D	LOC-4E4	496BH	LOC-5B13-2	509D	LOC-5A4	521F	LOC-5A4
482F	LOC-4E4	497A	LOC-5B13-2	510A	LOC-5A4	522A	LOC-5A4
483A	LOC-4E4	497B	LOC-5B13-2	510B	LOC-5A4	522B	LOC-5A4
483B	LOC-4E4	497C	LOC-5B13-2	510C	LOC-5A4	522C	LOC-5A4
483G	LOC-4E4	498AG	LOC-5B13-2	510D	LOC-5A4	523EG	LOC-5A4
483H	LOC-4E4	498CH	LOC-5B13-2	511A	LOC-5A4	523FH	LOC-5A4
483R	LOC-4E4	499G	LOC-4E4	511B	LOC-5A4	524B	LOC-5A4
484A	LOC-4E4	499H	LOC-4E4	511C	LOC-5A4	524E	LOC-5A4
484B	LOC-4E4	500G	LOC-4E4	511D	LOC-5A4	524F	LOC-5A4
484G	LOC-4E4	500H	LOC-4E4	512A	LOC-5A4	524G	LOC-5A4
484H	LOC-4E4	501G	LOC-4E4	512B	LOC-5A4	524H	LOC-5A4
484R	LOC-4E4	501H	LOC-4E4	513A	LOC-5A4	525E	LOC-5A4
485A	LOC-4E4	503BD	LOC-4E2-1	513B	LOC-5A4	525F	LOC-5A4
485B	LOC-4E4	504A	LOC-5A2	513C	LOC-5A4	526B	LOC-5A4
485G	LOC-4E4	504B	LOC-5A2	513D	LOC-5A4	526E	LOC-5A4
485H	LOC-4E4	504C	LOC-5A2	514A	LOC-5A4	526F	LOC-5A4
486A	LOC-4E4	504D	LOC-5A2	514B	LOC-5A4	527B	LOC-5A4
486B	LOC-4E4	505A	LOC-5A2	514C	LOC-5A4	527E	LOC-5A4
487A	LOC-4E4	505B	LOC-5A2	514D	LOC-5A4	527F	LOC-5A4
487B	LOC-4E4	505C	LOC-5A2	514E	LOC-5A4	528B	LOC-4D4
488A	LOC-4E4	505D	LOC-5A2	515A	LOC-5A4	528E	LOC-4D4
488B	LOC-4E4	506A	LOC-5A2	515B	LOC-5A4	528F	LOC-4D4
489A	LOC-4E4	506B	LOC-5A2	515C	LOC-5A4	529A	LOC-4D4
489B	LOC-4E4	506C	LOC-5A2	515D	LOC-5A4	529E	LOC-4D4
490A	LOC-4E4	506D	LOC-5A2	516A	LOC-5A4	530A	LOC-4D4
490B	LOC-4E4	507A	LOC-5A2	516B	LOC-5A4	530E	LOC-4D4
491A	LOC-4E4	507B	LOC-5A2	516C	LOC-5A4	531A	LOC-4D4

Table E.3 Cable Routing Points to Location Mapping (Continued)

Routing Pt	Location	Routing Pt	Location	Routing Pt	Location	Routing Pt	Location
531E	LOC-4D4	547F	LOC-4D2	562E	LOC-4D2	568E	LOC-4D2
532A	LOC-4D4	548B	LOC-5A4	562F	LOC-4D2	568F	LOC-4D2
532B	LOC-4D4	548E	LOC-5A4	563A	LOC-4D2	569A	LOC-4D2
532F	LOC-4D4	548F	LOC-5A4	563B	LOC-4D2	569B	LOC-4D2
533F	LOC-4D4	549B	LOC-5A4	563C	LOC-4D2	569C	LOC-4D2
534F	LOC-4D4	549E	LOC-5A4	563D	LOC-4D2	569D	LOC-4D2
535A	LOC-4D4	550B	LOC-5A4	563E	LOC-4D2	569E	LOC-4D2
535F	LOC-4D4	551B	LOC-5A4	563F	LOC-4D2	569F	LOC-4D2
536A	LOC-4D4	552E	LOC-5A4	564A	LOC-4D2	570A	LOC-4D2
536F	LOC-4D4	553E	LOC-5A4	564B	LOC-4D2	570C	LOC-4D2
537B	LOC-5A4	554E	LOC-5A4	564C	LOC-4D2	570D	LOC-4D2
537E	LOC-5A4	555E	LOC-5A4	564D	LOC-4D2	571A	LOC-4D2
537F	LOC-5A4	556B	LOC-5A4	564E	LOC-4D2	571C	LOC-4D2
538B	LOC-5A4	556C	LOC-5A4	564F	LOC-4D2	571D	LOC-4D2
538E	LOC-5A4	556D	LOC-5A4	565A	LOC-4D2	572A	LOC-4D2
539B	LOC-5A4	557BG	LOC-5A4	565B	LOC-4D2	572C	LOC-4D2
540B	LOC-4D2	557CH	LOC-5A4	565C	LOC-4D2	572D	LOC-4D2
540E	LOC-4D2	558D	LOC-5A4	565D	LOC-4D2	573A	LOC-4D2
540F	LOC-4D2	558DA	LOC-5A4	565E	LOC-4D2	573B	LOC-4D2
541B	LOC-5A4	559D	LOC-5A4	565F	LOC-4D2	573C	LOC-4D2
541D	LOC-5A4	560A	LOC-4D2	566A	LOC-4D2	573D	LOC-4D2
541E	LOC-5A4	560B	LOC-4D2	566B	LOC-4D2	573E	LOC-4D2
542B	LOC-5A4	560C	LOC-4D2	566C	LOC-4D2	573F	LOC-4D2
543A	LOC-4D2	560D	LOC-4D2	566D	LOC-4D2	574A	LOC-4D2
543B	LOC-4D2	560E	LOC-4D2	566E	LOC-4D2	574B	LOC-4D2
543C	LOC-4D2	560F	LOC-4D2	566F	LOC-4D2	574C	LOC-4D2
543E	LOC-4D2	561A	LOC-4D2	567A	LOC-4D2	574D	LOC-4D2
543F	LOC-4D2	561B	LOC-4D2	567B	LOC-4D2	574E	LOC-4D2
544B	LOC-5A4	561C	LOC-4D2	567C	LOC-4D2	574F	LOC-4D2
544E	LOC-5A4	561D	LOC-4D2	567D	LOC-4D2	575A	LOC-4D2
544F	LOC-5A4	561E	LOC-4D2	567E	LOC-4D2	575B	LOC-4D2
545B	LOC-5A4	561F	LOC-4D2	567F	LOC-4D2	575C	LOC-4D2
545E	LOC-5A4	562A	LOC-4D2	568A	LOC-4D2	575D	LOC-4D2
546B	LOC-5A4	562B	LOC-4D2	568B	LOC-4D2	575E	LOC-4D2
547B	LOC-4D2	562C	LOC-4D2	568C	LOC-4D2	575F	LOC-4D2
547E	LOC-4D2	562D	LOC-4D2	568D	LOC-4D2	576A	LOC-4D2

Table E.3 Cable Routing Points to Location Mapping (Continued)

Routing Pt	Location	Routing Pt	Location	Routing Pt	Location	Routing Pt	Location
576B	LOC-4D2	583E	LOC-4D2	589E	LOC-4D2	595E	LOC-4D2
576C	LOC-4D2	583F	LOC-4D2	589F	LOC-4D2	595F	LOC-4D2
576D	LOC-4D2	584A	LOC-4D2	590A	LOC-4D2	596A	LOC-4D2
576E	LOC-4D2	584B	LOC-4D2	590B	LOC-4D2	596B	LOC-4D2
576F	LOC-4D2	584C	LOC-4D2	590C	LOC-4D2	596C	LOC-4D2
577A	LOC-4D2	584D	LOC-4D2	590D	LOC-4D2	596D	LOC-4D2
577B	LOC-4D2	584E	LOC-4D2	590E	LOC-4D2	596E	LOC-4D2
577C	LOC-4D2	584F	LOC-4D2	590F	LOC-4D2	596F	LOC-4D2
577D	LOC-4D2	585A	LOC-4D2	591A	LOC-4D2	597A	LOC-4D2
577E	LOC-4D2	585B	LOC-4D2	591B	LOC-4D2	597B	LOC-4D2
577F	LOC-4D2	585C	LOC-4D2	591C	LOC-4D2	597C	LOC-4D2
578A	LOC-4D2	585D	LOC-4D2	591D	LOC-4D2	597D	LOC-4D2
578B	LOC-4D2	585E	LOC-4D2	591E	LOC-4D2	597E	LOC-4D2
578C	LOC-4D2	585F	LOC-4D2	591F	LOC-4D2	597F	LOC-4D2
578D	LOC-4D2	586A	LOC-4D2	592A	LOC-4D2	598A	LOC-4D2
578E	LOC-4D2	586B	LOC-4D2	592B	LOC-4D2	598B	LOC-4D2
578F	LOC-4D2	586C	LOC-4D2	592C	LOC-4D2	598C	LOC-4D2
579A	LOC-4D2	586D	LOC-4D2	592D	LOC-4D2	598D	LOC-4D2
579B	LOC-4D2	586E	LOC-4D2	592E	LOC-4D2	598E	LOC-4D2
579C	LOC-4D2	586F	LOC-4D2	592F	LOC-4D2	598F	LOC-4D2
579D	LOC-4D2	587A	LOC-4D2	593A	LOC-4D2	599A	LOC-4D2
579E	LOC-4D2	587B	LOC-4D2	593B	LOC-4D2	599B	LOC-4D2
579F	LOC-4D2	587C	LOC-4D2	593C	LOC-4D2	599C	LOC-4D2
580A	LOC-4D2	587D	LOC-4D2	593D	LOC-4D2	599D	LOC-4D2
580C	LOC-4D2	587E	LOC-4D2	593E	LOC-4D2	599E	LOC-4D2
580D	LOC-4D2	587F	LOC-4D2	593F	LOC-4D2	599F	LOC-4D2
581A	LOC-4D2	588A	LOC-4D2	594A	LOC-4D2	600B	LOC-4D2
581C	LOC-4D2	588B	LOC-4D2	594B	LOC-4D2	600E	LOC-4D2
581D	LOC-4D2	588C	LOC-4D2	594C	LOC-4D2	600F	LOC-4D2
582A	LOC-4D2	588D	LOC-4D2	594D	LOC-4D2	601B	LOC-4D2
582C	LOC-4D2	588E	LOC-4D2	594E	LOC-4D2	601E	LOC-4D2
582D	LOC-4D2	588F	LOC-4D2	594F	LOC-4D2	601F	LOC-4D2
583A	LOC-4D2	589A	LOC-4D2	595A	LOC-4D2	602A	LOC-4D2
583B	LOC-4D2	589B	LOC-4D2	595B	LOC-4D2	602B	LOC-4D2
583C	LOC-4D2	589C	LOC-4D2	595C	LOC-4D2	602C	LOC-4D2
583D	LOC-4D2	589D	LOC-4D2	595D	LOC-4D2	602D	LOC-4D2

Table E.3 Cable Routing Points to Location Mapping (Continued)

Routing Pt	Location	Routing Pt	Location	Routing Pt	Location	Routing Pt	Location
602E	LOC-4D2	616E	LOC-4D4	630A	LOC-5A4	659A	LOC-4C1
602F	LOC-4D2	617C	LOC-4D4	631A	LOC-4C4	659B	LOC-4C1
603A	LOC-4D2	617D	LOC-4D4	63A	LOC-LSH	659C	LOC-4C1
603B	LOC-4D2	618C	LOC-4D4	63B	LOC-LSH	659D	LOC-4C1
603C	LOC-4D2	618D	LOC-4D4	641A	LOC-4C3	65A	LOC-LSH
603D	LOC-4D2	618E	LOC-4D4	641B	LOC-4C3	65B	LOC-LSH
603E	LOC-4D2	619D	LOC-4D4	642A	LOC-4C3	660A	LOC-4C1
603F	LOC-4D2	61B	LOC-LSH	642B	LOC-4C3	660B	LOC-4C1
604A	LOC-4D2	620C	LOC-4D4	643A	LOC-4C3	660C	LOC-4C1
604B	LOC-4D2	620D	LOC-4D4	643B	LOC-4C3	660D	LOC-4C1
604C	LOC-4D2	620E	LOC-4D4	644B	LOC-4C3	661A	LOC-4C1
604D	LOC-4D2	621C	LOC-4D4	645B	LOC-4C3	661B	LOC-4C1
604E	LOC-4D2	621D	LOC-4D4	646BD	LOC-4C3	661C	LOC-4C1
604F	LOC-4D2	621E	LOC-4D4	648D	LOC-4C5	661D	LOC-4C1
605D	LOC-4D2	621F	LOC-4D4	64B	LOC-LSH	662A	LOC-4C1
606C	LOC-4D2	622C	LOC-4D4	650A	LOC-4C4	662B	LOC-4C1
607E	LOC-4D2	622D	LOC-4D4	652A	LOC-4C4	662C	LOC-4C1
608A	LOC-4D2	622E	LOC-4D4	653A	LOC-4C4	662D	LOC-4C1
609A	LOC-4D2	623C	LOC-4D4	654A	LOC-4C1	663A	LOC-4C1
610A	LOC-4D2	623D	LOC-4D4	654B	LOC-4C1	663B	LOC-4C1
612A	LOC-4D2	624C	LOC-4D4	654C	LOC-4C1	663C	LOC-4C1
612B	LOC-4D2	624D	LOC-4D4	654D	LOC-4C1	663D	LOC-4C1
612C	LOC-4D2	624E	LOC-4D4	655A	LOC-4C3	664A	LOC-4C1
612E	LOC-4D2	625D	LOC-4D4	655B	LOC-4C5	664B	LOC-4C1
613A	LOC-4D2	626DF	LOC-4D4	655C	LOC-4C5	664C	LOC-4C1
613B	LOC-4D2	627D	LOC-4D4	655D	LOC-4C3	664D	LOC-4C1
613C	LOC-4D2	627F	LOC-4D4	656A	LOC-4C5	665A	LOC-4C1
613E	LOC-4D2	628A	LOC-5A4	656CD	LOC-4C5	665B	LOC-4C1
614C	LOC-4D4	628B	LOC-5A4	657A	LOC-4C1	665C	LOC-4C1
614D	LOC-4D4	628C	LOC-5A4	657B	LOC-4C1	665D	LOC-4C1
614E	LOC-4D4	628F	LOC-5A4	657C	LOC-4C1	666A	LOC-4C1
615C	LOC-4D4	629A	LOC-5A4	657D	LOC-4C1	666B	LOC-4C1
615D	LOC-4D4	629B	LOC-5A4	658A	LOC-4C1	666C	LOC-4C1
615E	LOC-4D4	629C	LOC-5A4	658B	LOC-4C1	666D	LOC-4C1
616C	LOC-4D4	629F	LOC-5A4	658C	LOC-4C1	667A	LOC-4C1
616D	LOC-4D4	62A	LOC-LSH	658D	LOC-4C1	667B	LOC-4C1

Table E.3 Cable Routing Points to Location Mapping (Continued)

Routing Pt	Location	Routing Pt	Location	Routing Pt	Location	Routing Pt	Location
667C	LOC-4C1	676D	LOC-4C1	688C	LOC-4C1	707E	LOC-4B-1
667D	LOC-4C1	677A	LOC-4C1	688E	LOC-4C1	708C	LOC-4B-1
668A	LOC-4C1	677B	LOC-4C1	689A	LOC-4C1	708D	LOC-4B-1
668B	LOC-4C1	677C	LOC-4C1	689C	LOC-4C1	708E	LOC-4B-1
668C	LOC-4C1	677D	LOC-4C1	68A	LOC-LSH	709C	LOC-4B-1
668D	LOC-4C1	678A	LOC-4C1	68B	LOC-LSH	709D	LOC-4B-1
669A	LOC-4C1	678B	LOC-4C1	690A	LOC-4C1	709E	LOC-4B-1
669B	LOC-4C1	678C	LOC-4C1	691C	LOC-4C1	70A	LOC-LSH
669C	LOC-4C1	678D	LOC-4C1	692C	LOC-4C1	70B	LOC-LSH
669D	LOC-4C1	679A	LOC-4C1	693A	LOC-4C1	710C	LOC-4B-1
66A	LOC-LSH	679B	LOC-4C1	694C	LOC-4C1	710D	LOC-4B-1
670A	LOC-4C1	679C	LOC-4C1	695A	LOC-4C1	710E	LOC-4B-1
670B	LOC-4C1	679D	LOC-4C1	695C	LOC-4C1	711C	LOC-4B-1
670C	LOC-4C1	67A	LOC-LSH	698C	LOC-4C1	711D	LOC-4B-1
670D	LOC-4C1	67B	LOC-LSH	699C	LOC-4C1	712C	LOC-4B-1
671A	LOC-4C1	680A	LOC-4C1	69A	LOC-LSH	712D	LOC-4B-1
671C	LOC-4C1	680C	LOC-4C1	700C	LOC-4C1	713C	LOC-4B-1
672A	LOC-4C1	681A	LOC-4C1	701A	LOC-4C3	713D	LOC-4B-1
672B	LOC-4C1	681B	LOC-4C1	701B	LOC-4C3	713F	LOC-4B-1
672C	LOC-4C1	681C	LOC-4C1	702A	LOC-4C3	713G	LOC-4B-1
672D	LOC-4C1	681D	LOC-4C1	702B	LOC-4C3	714C	LOC-4B-1
673A	LOC-4C1	682A	LOC-4C1	702C	LOC-4C3	714D	LOC-4B-1
673B	LOC-4C1	682C	LOC-4C1	703A	LOC-4C3	715F	LOC-4B-1
673C	LOC-4C1	683A	LOC-4C1	703B	LOC-4C3	715G	LOC-4B-1
673D	LOC-4C1	683C	LOC-4C1	703C	LOC-4C3	716F	LOC-4B-1
674A	LOC-4C1	684A	LOC-4C1	704CE	LOC-4B-1	716G	LOC-4B-1
674B	LOC-4C1	684B	LOC-4C1	704DF	LOC-4B-1	717F	LOC-4B-1
674C	LOC-4C1	684C	LOC-4C1	704EG	LOC-4B-1	717G	LOC-4B-1
674D	LOC-4C1	684D	LOC-4C1	705C	LOC-4B-1	718C	LOC-4B-1
675A	LOC-4C1	685A	LOC-4C1	705D	LOC-4B-1	718D	LOC-4B-1
675B	LOC-4C1	685C	LOC-4C1	705E	LOC-4B-1	718F	LOC-4B-1
675C	LOC-4C1	686CE	LOC-4C1	706C	LOC-4B-1	718G	LOC-4B-1
675D	LOC-4C1	687A	LOC-4C1	706D	LOC-4B-1	719C	LOC-4B-1
676A	LOC-4C1	687C	LOC-4C1	706E	LOC-4B-1	719D	LOC-4B-1
676B	LOC-4C1	687E	LOC-4C1	707C	LOC-4B-1	719E	LOC-4B-1
676C	LOC-4C1	688A	LOC-4C1	707D	LOC-4B-1	71A	LOC-LSH

Table E.3 Cable Routing Points to Location Mapping (Continued)

Routing Pt	Location	Routing Pt	Location	Routing Pt	Location	Routing Pt	Location
71B	LOC-LSH	736D	LOC-4B-1	748B	LOC-4A-3	761A	LOC-4A-2
720C	LOC-4B-1	737C	LOC-4B-1	748C	LOC-4A-3	761D	LOC-4A-2
720D	LOC-4B-1	737D	LOC-4B-1	748D	LOC-4A-3	762A	LOC-4A-2
721C	LOC-4B-1	738C	LOC-4B-1	749A	LOC-4A-3	762D	LOC-4A-2
721D	LOC-4B-1	738D	LOC-4B-1	749B	LOC-4A-3	763A	LOC-4A-2
722C	LOC-4B-1	739C	LOC-4B-1	749C	LOC-4A-3	763B	LOC-4A-2
722D	LOC-4B-1	739D	LOC-4B-1	749D	LOC-4A-3	764A	LOC-4A-2
723C	LOC-4B-1	73A	LOC-LSH	74A	LOC-LSH	764B	LOC-4A-2
723D	LOC-4B-1	73B	LOC-LSH	74B	LOC-LSH	765A	LOC-4A-2
723E	LOC-4B-1	740B	LOC-4A-2	750A	LOC-4A-3	765B	LOC-4A-2
724C	LOC-4B-1	740C	LOC-4A-2	750B	LOC-4A-3	766A	LOC-4A-2
724D	LOC-4B-1	741A	LOC-4A-2	750C	LOC-4A-3	766B	LOC-4A-2
725C	LOC-4B-1	741B	LOC-4A-2	750D	LOC-4A-3	767A	LOC-4A-6
725D	LOC-4B-1	741C	LOC-4A-2	751A	LOC-4A-4	767D	LOC-4A-6
726C	LOC-4B-1	742A	LOC-4A-2	751B	LOC-4A-4	768A	LOC-4A-6
726D	LOC-4B-1	742B	LOC-4A-2	751C	LOC-4A-4	768D	LOC-4A-6
727A	LOC-4B-1	742C	LOC-4A-2	751D	LOC-4A-4	769A	LOC-4A-7
727B	LOC-4B-1	743A	LOC-4A-2	752B	LOC-4A-4	769D	LOC-4A-7
728A	LOC-4B-1	743B	LOC-4A-2	752C	LOC-4A-4	76B	LOC-LSH
728B	LOC-4B-1	743C	LOC-4A-2	753B	LOC-4A-5	770A	LOC-4A-7
729C	LOC-4B-4	744A	LOC-4A-2	753C	LOC-4A-5	770D	LOC-4A-7
729D	LOC-4B-4	744B	LOC-4A-2	754B	LOC-4A-5	771A	LOC-4A-7
72A	LOC-LSH	744C	LOC-4A-2	754C	LOC-4A-5	771D	LOC-4A-7
730C	LOC-4B-1	745A	LOC-4A-2	755B	LOC-4A-5	772B	LOC-4A-2
730D	LOC-4B-1	745B	LOC-4A-2	755C	LOC-4A-5	772C	LOC-4A-2
731C	LOC-4B-1	745C	LOC-4A-2	756B	LOC-4A-5	773B	LOC-4A-2
731D	LOC-4B-1	745D	LOC-4A-2	756C	LOC-4A-5	773C	LOC-4A-2
732C	LOC-4B-1	746A	LOC-4A-3	757B	LOC-4A-5	774B	LOC-4A-2
732D	LOC-4B-1	746B	LOC-4A-3	757C	LOC-4A-5	774C	LOC-4A-2
733C	LOC-4B-1	746C	LOC-4A-3	758B	LOC-4A-5	775B	LOC-4A-2
733D	LOC-4B-1	746D	LOC-4A-3	758C	LOC-4A-5	775C	LOC-4A-2
734C	LOC-4B-1	747A	LOC-4A-3	759B	LOC-4A-5	776B	LOC-4A-2
734D	LOC-4B-1	747B	LOC-4A-3	759C	LOC-4A-5	776C	LOC-4A-2
735C	LOC-4B-1	747C	LOC-4A-3	75A	LOC-LSH	777B	LOC-4A-2
735D	LOC-4B-1	747D	LOC-4A-3	760A	LOC-4A-2	777C	LOC-4A-2
736C	LOC-4B-1	748A	LOC-4A-3	760D	LOC-4A-2	777F	LOC-4A-2

Table E.3 Cable Routing Points to Location Mapping (Continued)

Routing Pt	Location	Routing Pt	Location	Routing Pt	Location	Routing Pt	Location
778F	LOC-4A-2	789B	LOC-6E	810H	LOC-4D2	831F	LOC-4C1
779B	LOC-4F3	78A	LOC-LSH	811G	LOC-4D2	832E	LOC-4C1
779D	LOC-4F3	78B	LOC-LSH	811H	LOC-4D2	832F	LOC-4C1
77A	LOC-LSH	790A	LOC-6E	812G	LOC-4D2	833A	LOC-4F2
77B	LOC-LSH	790B	LOC-6E	812H	LOC-4D2	833C	LOC-4F2
780B	LOC-4E4	791A	LOC-6E	813G	LOC-4D2	834C	LOC-4F2
780D	LOC-4E4	791B	LOC-6E	813H	LOC-4D2	835G	LOC-4D2
781A	LOC-4D2	792A	LOC-4F2	814G	LOC-4D2	835H	LOC-4D2
781B	LOC-4D2	792C	LOC-4F2	814H	LOC-4D2	840B	LOC-4A-2
781C	LOC-4D2	793CD	LOC-4F2	815E	LOC-4C3	841B	LOC-4A-2
781D	LOC-4D2	794D	LOC-4F2	816E	LOC-4C3	841E	LOC-4A-2
781E	LOC-4D2	795AB	LOC-4F2	817E	LOC-4C3	842B	LOC-4A-2
781F	LOC-4D2	796A	LOC-4E4	818E	LOC-4C3	842E	LOC-4A-2
782A	LOC-4D2	796B	LOC-4E4	819E	LOC-4C3	843B	LOC-4A-2
782B	LOC-4D2	797E	LOC-4E4	820B	LOC-5D2	843E	LOC-4A-2
782C	LOC-4D2	797F	LOC-4E4	821A	LOC-5D2	844B	LOC-4A-2
782D	LOC-4D2	798E	LOC-4E4	821B	LOC-5D2	844E	LOC-4A-2
782E	LOC-4D2	799A	LOC-4E4	822E	LOC-4C1	845B	LOC-4A-2
782F	LOC-4D2	799BD	LOC-4E4	822F	LOC-4C1	845E	LOC-4A-2
783A	LOC-4D2	800AE	LOC-4E4	823E	LOC-4C1	846B	LOC-4A-2
783B	LOC-4D2	801A	LOC-4F2	823F	LOC-4C1	847AB	LOC-4A-2
783C	LOC-4D2	802A	LOC-4F2	824E	LOC-4C1	848A	LOC-4A-7
783D	LOC-4D2	802C	LOC-4F2	824F	LOC-4C1	849A	LOC-4A-7
783E	LOC-4D2	803C	LOC-4C1	825E	LOC-4C1	850A	LOC-4A-7
783F	LOC-4D2	804C	LOC-4C1	825F	LOC-4C1	851D	LOC-4A-2
784A	LOC-5B13-2	805G	LOC-4D2	826E	LOC-4C1	852F	LOC-4D4
784B	LOC-5B13-2	805H	LOC-4D2	826F	LOC-4C1	852G	LOC-4D4
784C	LOC-5B13-2	806G	LOC-4D2	827E	LOC-4C1	854G	LOC-4E4
784D	LOC-5B13-2	806H	LOC-4D2	827F	LOC-4C1	855A	LOC-5B10
785B	LOC-4C5	807G	LOC-4D2	828E	LOC-4C1	856F	LOC-4F3
786B	LOC-4C5	807H	LOC-4D2	828F	LOC-4C1	857FA	LOC-4F3
786CD	LOC-4C5	808G	LOC-4D2	829E	LOC-4C1	858F	LOC-4F3
787G	LOC-4E2-1	808H	LOC-4D2	829F	LOC-4C1	860F	LOC-4F3
788AE	LOC-4E4	809G	LOC-4D2	830E	LOC-4C1	861F	LOC-4F3
788BF	LOC-4E4	809H	LOC-4D2	830F	LOC-4C1	862FA	LOC-4F3
789A	LOC-6E	810G	LOC-4D2	831E	LOC-4C1	863D	LOC-4E2-1

Table E.3 Cable Routing Points to Location Mapping (Continued)

Routing Pt	Location	Routing Pt	Location	Routing Pt	Location	Routing Pt	Location
863F	LOC-4F3	R115	LOC-8A1	R136	LOC-4D4	R155	LOC-5B13-2
864BE	LOC-4A-2	R115	LOC-8B1	R137	LOC-4E4	R155	LOC-5A4
865G	LOC-4D2	R116	LOC-8A2	R137	LOC-4D4	R156	LOC-5B13-2
866A	LOC-5A4	R116	LOC-8B2	R138	LOC-4D4	R157	LOC-5B13-2
867BE	LOC-4C5	R117	LOC-8A2	R138	LOC-4E4	R157	LOC-5A4
868E	LOC-4C3	R117	LOC-8B2	R139	LOC-4D4	R158	LOC-5B13-2
869E	LOC-4C3	R118	LOC-8B2	R139	LOC-4E4	R159	LOC-5A4
879A	LOC-6E	R119	LOC-8B2	R140	LOC-5B13-2	R159	LOC-5B13-2
879B	LOC-6E	R120	LOC-4F2	R140	LOC-5A4	R160	LOC-5B13-2
879D	LOC-6E	R121	LOC-4F2	R141	LOC-5B13-2	R161	LOC-5A4
879F	LOC-4A-2	R122	LOC-5C11-4	R141	LOC-5A4	R161	LOC-5B13-2
FANC	LOC-6D	R122	LOC-5B13-2	R142	LOC-5A4	R162	LOC-4E4
R100	LOC-6E	R123	LOC-5C11-4	R142	LOC-5B13-2	R163	LOC-4E4
R101	LOC-6E	R123	LOC-5B13-2	R143	LOC-5A4	R164	LOC-4D2
R102	LOC-6E	R124	LOC-5C11-4	R143	LOC-5B13-2	R164	LOC-4E4
R103	LOC-6E	R125	LOC-5B13-2	R144	LOC-5A4	R165	LOC-4E4
R104	LOC-8C3	R125	LOC-5C11-4	R144	LOC-5B13-2	R165	LOC-4D2
R105	LOC-8C3	R126	LOC-5C11	R145	LOC-5B13-2	R166	LOC-4D2
R106	LOC-8B1	R127	LOC-4F3	R145	LOC-5A4	R166	LOC-4E4
R106	LOC-8C3	R128	LOC-4D4	R146	LOC-5B13-2	R167	LOC-4E4
R107	LOC-8C3	R128	LOC-4F3	R146	LOC-5A4	R167	LOC-4D2
R107	LOC-8B1	R128	LOC-4E4-1	R147	LOC-5A4	R168	LOC-4E4
R108	LOC-8C5	R129	LOC-4F3	R147	LOC-5B13-2	R168	LOC-4D2
R108	LOC-5C11-4	R129	LOC-4E4-1	R148	LOC-5B13-2	R169	LOC-4D2
R109	LOC-5C11-4	R129	LOC-4D4	R148	LOC-5A4	R169	LOC-4E4
R109	LOC-8C5	R130	LOC-4E4-1	R149	LOC-5A4	R170	LOC-4E4
R110	LOC-5C11-5	R130	LOC-4F3	R149	LOC-5B13-2	R171	LOC-4E4
R110	LOC-8C5	R130	LOC-4D4	R150	LOC-5B13-2	R172	LOC-4E4
R111	LOC-5C11-5	R131	LOC-4E4-1	R150	LOC-5A4	R173	LOC-4E4
R111	LOC-8C5	R131	LOC-4F3	R151	LOC-5A4	R174	LOC-4E4
R112	LOC-8B2	R131	LOC-4D4	R151	LOC-5B13-2	R175	LOC-4E4
R112	LOC-8C4	R132	LOC-5C11-4	R152	LOC-5A4	R176	LOC-4E4
R113	LOC-8C4	R133	LOC-5C11-4	R152	LOC-5B13-2	R177	LOC-4E4
R113	LOC-8B2	R134	LOC-5C11-4	R153	LOC-5A4	R178	LOC-4D2
R114	LOC-8A1	R135	LOC-5C11-4	R153	LOC-5B13-2	R178	LOC-4E2-1
R114	LOC-8B1	R136	LOC-4E4	R154	LOC-5B13-2	R179	LOC-4D2

Table E.3 Cable Routing Points to Location Mapping (Continued)

Routing Pt	Location	Routing Pt	Location	Routing Pt	Location	Routing Pt	Location
R179	LOC-4E2-1	R202	LOC-4B-1	R226	LOC-4A-2	R311	LOC-3G-1
R180	LOC-4C3	R203	LOC-4C3	R227	LOC-4A-2	R312	LOC-3G-1
R180	LOC-4D4	R203	LOC-4B-1	R228	LOC-4A-2	R313	LOC-3F-2
R181	LOC-4C3	R204	LOC-4B-1	R229	LOC-4A-2	R313	LOC-3G-1
R181	LOC-4D4	R204	LOC-4C3	R230	LOC-4A-2	R314	LOC-3F-2
R182	LOC-4C3	R205	LOC-4B-1	R231	LOC-5D2	R314	LOC-3G-1
R182	LOC-4D4	R205	LOC-4C3	R232	LOC-4F2	R315	LOC-3F-2
R183	LOC-4C3	R206	LOC-4B-1	R233	LOC-4A-2	R315	LOC-3G-1
R183	LOC-4D4	R206	LOC-4A-2	R234	LOC-4A-2	R316	LOC-3F-2
R184	LOC-4D4	R207	LOC-4A-2	R235	LOC-4A-2	R316	LOC-3G-1
R184	LOC-4C3	R207	LOC-4B-1	R236	LOC-4D4	R317	LOC-3G-1
R185	LOC-4C1	R208	LOC-4A-2	R237	LOC-4E2-1	R317	LOC-3F-2
R185	LOC-4D4	R208	LOC-4B-1	R238	LOC-4E4	R318	LOC-3G-1
R186	LOC-4D4	R209	LOC-4B-1	R239	LOC-5B10	R318	LOC-3F-2
R187	LOC-4D4	R209	LOC-4A-2	R240	LOC-5A4	R319	LOC-3G-1
R187	LOC-4C1	R210	LOC-4B-1	R240	LOC-4C3	R319	LOC-3F-2
R188	LOC-4D4	R210	LOC-4A-2	R300	LOC-3I1	R320	LOC-3G-1
R188	LOC-4C1	R211	LOC-4B-1	R300	LOC-3H1	R321	LOC-3G-1
R189	LOC-4C1	R212	LOC-4B-1	R301	LOC-3I1	R322	LOC-3G-3
R189	LOC-4D4	R213	LOC-4B-1	R301	LOC-3H1	R322	LOC-3F-2
R190	LOC-4D4	R214	LOC-4B-1	R302	LOC-3H1	R322	LOC-3E
R191	LOC-4D4	R215	LOC-4A-7	R302	LOC-3I1	R323	LOC-3E
R191	LOC-4C1	R215	LOC-4B-1	R303	LOC-3G-1	R323	LOC-3F-2
R192	LOC-4C1	R216	LOC-4B-1	R303	LOC-3H1	R324	LOC-3E
R192	LOC-4D4	R216	LOC-4A-7	R304	LOC-3G-1	R324	LOC-3F-2
R193	LOC-4D2	R217	LOC-4B-1	R304	LOC-3H1	R325	LOC-3F-2
R194	LOC-4D2	R218	LOC-4B-1	R305	LOC-3H1	R326	LOC-3F-2
R195	LOC-4D2	R219	LOC-4B-4	R305	LOC-3G-1	R327	LOC-3E
R196	LOC-4D2	R220	LOC-4B-4	R306	LOC-3G-1	R327	LOC-3F-2
R197	LOC-4D2	R221	LOC-4B-1	R306	LOC-3F-1	R328	LOC-3E
R198	LOC-5A4	R221	LOC-4A-5	R307	LOC-3G-1	R328	LOC-3F-2
R199	LOC-5A4	R222	LOC-4B-1	R307	LOC-3F-1	R329	LOC-3F-1
R200	LOC-5A4	R222	LOC-4A-5	R308	LOC-3G-1	R330	LOC-3F-1
R201	LOC-4B-1	R223	LOC-4A-6	R308	LOC-3F-1	R331	LOC-3F-1
R201	LOC-4C3	R224	LOC-4A-6	R309	LOC-3G-1	R332	LOC-3F-2
R202	LOC-4C3	R225	LOC-4A-2	R310	LOC-3G-1	R332	LOC-3E

Table E.3 Cable Routing Points to Location Mapping (Continued)

Routing Pt	Location	Routing Pt	Location	Routing Pt	Location	Routing Pt	Location
R333	LOC-3F-2	R351	LOC-3E	R374	LOC-3B1	R410	LOC-3H4
R333	LOC-3E	R351	LOC-3D	R385	LOC-3J	R411	LOC-3H4
R334	LOC-3F-2	R352	LOC-3C-2	R386	LOC-3J	R411	LOC-3G-1
R334	LOC-3E	R352	LOC-3D	R387	LOC-3J	R412	LOC-3F-1
R335	LOC-3E	R353	LOC-3D	R388	LOC-3J	R412	LOC-3G-1
R335	LOC-3F-1	R353	LOC-3C-2	R389	LOC-3J	R413	LOC-3F-1
R336	LOC-3E	R354	LOC-3D	R390	LOC-3J	R413	LOC-3G-1
R336	LOC-3F-1	R354	LOC-3C-2	R391	LOC-3J	R414	LOC-3F-1
R337	LOC-3F-1	R355	LOC-3D	R392	LOC-3E	R414	LOC-3G-1
R337	LOC-3E	R356	LOC-3D	R392	LOC-3D	R415	LOC-3F-1
R338	LOC-3F-1	R357	LOC-3D	R393	LOC-3B1	R415	LOC-3G-1
R338	LOC-3E	R358	LOC-3D	R393	LOC-3D	R416	LOC-3F-1
R339	LOC-3E	R359	LOC-3D	R394	LOC-3B1	R416	LOC-3G-1
R339	LOC-3F-1	R360	LOC-3D	R395	LOC-3G-1	R417	LOC-3F-1
R340	LOC-3E	R361	LOC-3D	R396	LOC-3E	R417	LOC-3G-1
R340	LOC-3F-1	R362	LOC-3D	R400	LOC-3I5	R418	LOC-3G-1
R341	LOC-3E	R363	LOC-3D	R400	LOC-3H5	R418	LOC-3F-1
R341	LOC-3D	R364	LOC-3B2-1	R401	LOC-3I5	R419	LOC-3G-1
R342	LOC-3D	R364	LOC-3C-2	R401	LOC-3H5	R419	LOC-3F-1
R342	LOC-3E	R365	LOC-3B2-1	R402	LOC-3I5	R420	LOC-3F-1
R343	LOC-3E	R366	LOC-3B2-1	R402	LOC-3H5	R420	LOC-3G-1
R343	LOC-3D	R366	LOC-3C-2	R403	LOC-3I4	R421	LOC-3F-1
R344	LOC-3E	R367	LOC-3D	R403	LOC-3H4	R421	LOC-3G-1
R344	LOC-3D	R367	LOC-3B1	R404	LOC-3H4	R422	LOC-3F-1
R345	LOC-3D	R368	LOC-3C-2	R404	LOC-3I4	R422	LOC-3G-1
R345	LOC-3E	R368	LOC-3B1	R405	LOC-3I4	R423	LOC-3G-1
R346	LOC-3E	R368	LOC-3D	R405	LOC-3H4	R424	LOC-3G-1
R346	LOC-3D	R369	LOC-3B1	R406	LOC-3G-1	R425	LOC-3G-1
R347	LOC-3E	R369	LOC-3D	R406	LOC-3H5	R426	LOC-3E
R347	LOC-3D	R370	LOC-3B1	R407	LOC-3G-1	R426	LOC-3G-1
R348	LOC-3D	R370	LOC-3D	R407	LOC-3H5	R426	LOC-3F-1
R348	LOC-3E	R371	LOC-3D	R408	LOC-3H5	R427	LOC-3F-1
R349	LOC-3E	R371	LOC-3B1	R408	LOC-3G-1	R427	LOC-3E
R349	LOC-3D	R372	LOC-3D	R409	LOC-3G-1	R427	LOC-3D
R350	LOC-3D	R372	LOC-3B1	R409	LOC-3H4	R428	LOC-3F-1
R350	LOC-3E	R373	LOC-3B1	R410	LOC-3G-1	R428	LOC-3E

Table E.3 Cable Routing Points to Location Mapping (Continued)

Routing Pt	Location	Routing Pt	Location	Routing Pt	Location	Routing Pt	Location
R429	LOC-3E	R450	LOC-3E	R472	LOC-3B1	R522	LOC-6D
R429	LOC-3F-1	R450	LOC-3D	R472	LOC-3D	R523	LOC-6D
R430	LOC-3F-1	R451	LOC-3D	R473	LOC-3B1	R524	LOC-6D
R430	LOC-3E	R451	LOC-3E	R473	LOC-3D	R525	LOC-6D
R431	LOC-3E	R452	LOC-3D	R475	LOC-3B1	R526	LOC-6D
R431	LOC-3F-1	R452	LOC-3E	R476	LOC-3B1	R527	LOC-6D
R432	LOC-3F-1	R453	LOC-3D	R477	LOC-3D	R528	LOC-6D
R433	LOC-3F-1	R453	LOC-3C-2	R477	LOC-3E	R529	LOC-6D
R434	LOC-3F-1	R454	LOC-3D	R478	LOC-3D	R530	LOC-6D
R435	LOC-3F-1	R454	LOC-3C-2	R479	LOC-3G-1	R531	LOC-6D
R436	LOC-3F-1	R455	LOC-3D	R480	LOC-3E	R531	LOC-5C11
R436	LOC-3E	R455	LOC-3C-2	R481	LOC-3E	R532	LOC-6D
R437	LOC-3F-1	R456	LOC-3D	R495	LOC-3J	R532	LOC-5C11
R437	LOC-3E	R456	LOC-3C-2	R496	LOC-3J	R533	LOC-6D
R438	LOC-3F-1	R457	LOC-3D	R497	LOC-3J	R533	LOC-5C11
R438	LOC-3E	R458	LOC-3D	R498	LOC-3J	R534	LOC-5D4
R439	LOC-3F-1	R459	LOC-3D	R499	LOC-3J	R535	LOC-5D4
R439	LOC-3E	R460	LOC-3D	R510	LOC-6E	R536	LOC-5D4
R440	LOC-3E	R461	LOC-3D	R511	LOC-6E	R537	LOC-5D4
R440	LOC-3F-1	R462	LOC-3D	R512	LOC-6E	R538	LOC-5D4
R441	LOC-3E	R463	LOC-3D	R513	LOC-6E	R539	LOC-5B3
R441	LOC-3F-1	R464	LOC-3D	R514	LOC-5E2	R539	LOC-5C11
R442	LOC-3E	R465	LOC-3C-2	R515	LOC-5E2	R540	LOC-5C11
R442	LOC-3D	R465	LOC-3B2-5	R516	LOC-5E2	R540	LOC-5B3
R443	LOC-3E	R466	LOC-3C-2	R516	LOC-5D4	R541	LOC-5B3
R443	LOC-3D	R466	LOC-3B2-5	R517	LOC-5E2	R541	LOC-5C11
R444	LOC-3E	R467	LOC-3B2-5	R517	LOC-5D4	R542	LOC-5C11
R444	LOC-3D	R467	LOC-3C-2	R518	LOC-5E2	R542	LOC-5B3
R445	LOC-3E	R468	LOC-3D	R518	LOC-5D4	R543	LOC-5B3
R445	LOC-3D	R468	LOC-3B1	R519	LOC-5E2	R543	LOC-5C11
R446	LOC-3E	R469	LOC-3D	R519	LOC-5D4	R544	LOC-5B3
R446	LOC-3D	R469	LOC-3B1	R520	LOC-5D4	R544	LOC-5C11
R447	LOC-3E	R470	LOC-3B1	R520	LOC-5E2	R545	LOC-5C11
R447	LOC-3D	R470	LOC-3D	R521	LOC-6D	R545	LOC-5B3
R448	LOC-3E	R471	LOC-3B1	R521	LOC-5C11	R546	LOC-5C11
R449	LOC-3E	R471	LOC-3D	R522	LOC-5C11	R546	LOC-5B3

Table E.3 Cable Routing Points to Location Mapping (Concluded)

Routing Pt	Location	Routing Pt	Location	Routing Pt	Location	Routing Pt	Location
R547	LOC-5C11	R574	LOC-5C11-6	R601	LOC-5B6	R672	LOC-6E
R548	LOC-5C11	R574	LOC-5B6	R603	LOC-5A3-5	R675	LOC-5B4
R549	LOC-5C11	R575	LOC-5B6	R603	LOC-5B6	R676	LOC-6E
R550	LOC-5C11	R575	LOC-5C11-6	R604	LOC-5B6	R677	LOC-6E
R551	LOC-5C11	R576	LOC-5C11-6	R604	LOC-5A3-5	R82	LOC-LSH
R552	LOC-5C11	R576	LOC-5B6	R605	LOC-5A3-5	R83	LOC-LSH
R554	LOC-5B4	R577	LOC-5C11-6	R605	LOC-5B6	T35	LOC-4C1
R554	LOC-5C11	R577	LOC-5B6	R606	LOC-5B6	T36	LOC-4C1
R555	LOC-5C11	R578	LOC-5C11-5	R607	LOC-5B6	T37C	LOC-4C1
R555	LOC-5B4	R579	LOC-5C11-5	R608	LOC-5B6	T37K	LOC-4C1
R556	LOC-5B4	R580	LOC-5C11-5	R609	LOC-5B6		
R556	LOC-5C11	R581	LOC-5B6	R610	LOC-5B6		
R557	LOC-5C11	R581	LOC-5C11-5	R611	LOC-5B6		
R557	LOC-5B4	R582	LOC-5B4	R612	LOC-5B2		
R558	LOC-5B4	R583	LOC-5B4	R613	LOC-5B2		
R558	LOC-5C11	R584	LOC-5B4	R614	LOC-5B2		
R559	LOC-5C11	R584	LOC-5A3-5	R615	LOC-5B2		
R559	LOC-5B4	R585	LOC-5A3-5	R616	LOC-5B3		
R560	LOC-5B2	R585	LOC-5B4	R616	LOC-5A3		
R561	LOC-5B2	R586	LOC-5B4	R617	LOC-5A3-5		
R562	LOC-5B2	R587	LOC-5B4	R618	LOC-5A3-5		
R563	LOC-5B2	R588	LOC-5B4	R619	LOC-5A3-1		
R564	LOC-5B2	R589	LOC-5B4	R620	LOC-5A3-1		
R565	LOC-5B2	R589	LOC-5A3-5	R621	LOC-5A3-1		
R566	LOC-5B2	R590	LOC-5A3-5	R622	LOC-5A3-1		
R567	LOC-5B2	R590	LOC-5B4	R623	LOC-5A3-1		
R568	LOC-5B6	R591	LOC-5B4	R624	LOC-5B6		
R568	LOC-5C11-6	R592	LOC-5B4	R624	LOC-5C11-5		
R569	LOC-5C11-6	R593	LOC-5B6	R625	LOC-5A3-1		
R569	LOC-5B6	R594	LOC-5B6	R626	LOC-5C11		
R570	LOC-5C11-6	R595	LOC-5B6	R627	LOC-5B6		
R571	LOC-5C11-6	R596	LOC-5B6	R628	LOC-6D		
R572	LOC-5B6	R597	LOC-5B6	R629	LOC-6D		
R572	LOC-5C11-6	R598	LOC-5B6	R658	LOC-5A3		
R573	LOC-5B6	R599	LOC-5B6	R658	LOC-5B3		
R573	LOC-5C11-6	R600	LOC-5B6	R671	LOC-5C11-5		

Table E.4

Component to Location and Associated Cable Transformation

Component	Transformation
12C2BAAX-AOO-LFO	=12C2BAAX-AOOLFOX+LOC-4E4.
12C2CAAX-AOO-LFO	=12C2CAAX-AOOLFOX+LOC-4E4.
12N016A-OOO-FSL	=12N016A-OOOFSLX.
12N016A-OOO-LFO	=12N016A-OOOLFOX+LOC-3I5+2NB019.
12N016B-OOO-FSL	=12N016B-OOOFSLX.
12N016B-OOO-LFO	=12N016B-OOOLFOX+LOC-3I3+2NB052.
12N016C-OOO-FSL	=12N016C-OOOFSLX.
12N016C-OOO-LFO	=12N016C-OOOLFOX+LOC-3I3+2NB054.
12N019A-OOO-FSL	=12N019A-OOOFSLX.
12N019A-OOO-LFO	=12N019A-OOOLFOX+LOC-3I5+2NB020.
12N019B-OOO-FSL	=12N019B-OOOFSLX.
12N019B-OOO-LFO	=12N019B-OOOLFOX+LOC-3I3+2NB053.
12N019C-OOO-FSL	=12N019C-OOOFSLX.
12N019C-OOO-LFO	=12N019C-OOOLFOX+LOC-3I3+2NB055.
12N413AX-OOO-FSL	=12N413AX-OOOFSLX.
12N413AX-OOO-LFO	=12N413AX-OOOLFOX+LOC-3E+2RH275.
12N413BX-OOO-FSL	=12N413BX-OOOFSLX.
12N413BX-OOO-LFO	=12N413BX-OOOLFOX+LOC-3E+2RH255.
12N413CX-OOO-FSL	=12N413CX-OOOFSLX.
12N413CX-OOO-LFO	=12N413CX-OOOLFOX+LOC-3E+2RH256.
1E132Y2-480-LPW	=1E132Y2-480LPWX+LOC-5C11-10.
1E135X2A-480-LPW	=1E135X2A-480LPWX+LOC-4F1.
1E141XA-480-LPW	=1E141XA-480LPWX+LOC-5C11-10+1SA010.
1E142XB-480-LPW	=1E142XB-480LPWX+LOC-5B13-1+1SA013.
1E211F5A-FUS-LF	=1E211F5A-FUSLFX+LOC-4E2-1.
1E211F6A-FUS-LF	=1E211F6A-FUSLFX+LOC-4E2-1.
1E211XA-125-LF	=1E211XA-125LFX+LOC-4F2.
1E211XB2-BCO	=1E211XB2BCOX+LOC-4F2+2FW113.
1E211YA-125-LF	=1E211YA-125LFX+LOC-4F2.
1E211YB8-BCO	=1E211YB8BCOX+LOC-4F2+2RI042.
1E212B24-BCO	=1E212B24BCOX+LOC-4E4+2AP460.
1E212F5B-FUS-LF	=1E212F5B-FUSLFX+LOC-4E2-1.
1E212F6B-FUS-LF	=1E212F6B-FUSLFX+LOC-4E2-1.
1E212XB-125-LF	=1E212XB-125LFX+LOC-4E4.
1E212XB1-BCO	=1E212XB1BCOX+LOC-4E4+2FW129.
1E212XB2-BCO	=1E212XB2BCOX+LOC-4E4+2FW198.
1E212YB-125-LF	=1E212YB-125LFX+LOC-4E4.
1E213C-125-LF	=1E213C-125LFX+LOC-5D2.
1E221XA-250-LF	=1E221XA-250LFX+LOC-4F2.
1E221YA-250-LF	=1E221YA-250LFX+LOC-3H4.
1E2332A-480-LF	=1E2332A-480LFX+LOC-3F-1.
1E2332A-V-UUM	=1E2332A-VUUMX.

Table E.4 (Continued)

Component to Location and Associated Cable Transformation

Component	Transformation
1E233A-480-LF	=1E233A-480LFX+LOC-4B-1.
1E233A-V-UUM	=1E233A-VUUMX.
1E233TX-TFM-LF	=1E233TX-TFMLFX+LOC-3D.
1E243C-416-LF	=1E243C-416LFX+LOC-5D2.
1E243C-V-UUM	=1E243C-VUUMX.
1E34X1B-480-LF	=1E34X1B-480LFX+LOC-3D.
1E34X1B-V-UUM	=1E34X1B-VUUMX.
1E34X2B-480-LF	=1E34X2B-480LFX+LOC-3F-1.
1E34X2B-V-UUM	=1E34X2B-VUUMX.
1E34XB-480-LF	=1E34XB-480LFX+LOC-3D.
1E34XB-V-UUM	=1E34XB-VUUMX.
1E35X1A-480-LF	=1E35X1A-480LFX+LOC-3E.
1E35X1A-V-UUM	=1E35X1A-VUUMX.
1E35X2A-480-LF	=1E35X2A-480LFX+LOC-4F2.
1E35X2A-V-UUM	=1E35X2A-VUUMX.
1E35X3A-480-LF	=1E35X3A-480LFX+LOC-4F2.
1E35X3A-V-UUM	=1E35X3A-VUUMX.
1E35XA-480-LF	=1E35XA-480LFX+LOC-4F2.
1E35XA-V-UUM	=1E35XA-VUUMX.
1E35Y1A-480-LF	=1E35Y1A-480LFX+LOC-3F-1.
1E35Y1A-V-UUM	=1E35Y1A-VUUMX.
1E35Y2A-480-LF	=1E35Y2A-480LFX+LOC-3G-1.
1E35Y2A-V-UUM	=1E35Y2A-VUUMX.
1E35YA-480-LF	=1E35YA-480LFX+LOC-4F2.
1E35YA-V-UUM	=1E35YA-VUUMX.
1E36X2B-480-LF	=1E36X2B-480LFX+LOC-4E4.
1E36X2B-V-UUM	=1E36X2B-VUUMX.
1E36X3B-480-LF	=1E36X3B-480LFX+LOC-4E4.
1E36X3B-V-UUM	=1E36X3B-VUUMX.
1E36XB-480-LF	=1E36XB-480LFX+LOC-4E4.
1E36XB-V-UUM	=1E36XB-VUUMX.
1E36Y1B-480-LF	=1E36Y1B-480LFX+LOC-3G-1.
1E36Y1B-V-UUM	=1E36Y1B-VUUMX.
1E36Y2B-480-LF	=1E36Y2B-480LFX+LOC-3F-2.
1E36Y2B-V-UUM	=1E36Y2B-VUUMX.
1E36Y3B-480-LF	=1E36Y3B-480LFX+LOC-5B6.
1E36Y3B-V-UUM	=1E36Y3B-VUUMX.
1E36YB-480-LF	=1E36YB-480LFX+LOC-4E4.
1E36YB-V-UUM	=1E36YB-VUUMX.
1E413ABXCPF-LFCO	=1E413ABXCPFLFCOX+LOC-4F2.
1E41YA-416-LF	=1E41YA-416LFX+LOC-4F2.
1E41YA-V-UUM	=1E41YA-VUUMX.

Table E.4 (Continued)

Component to Location and Associated Cable Transformation

Component	Transformation
1E41YAAX-ACD-LFO	=1E41YAAX-ACDLFOX+LOC-4F2.
1E42YB-416-LF	=1E42YB-416LFX+LOC-4E4.
1E42YB-V-UUM	=1E42YB-VUUMX.
1E42YBBX-ACD-LFO	=1E42YBBX-ACDLFOX+LOC-4E4.
1E431C-480-LF	=1E431C-480LFX+LOC-5D2.
1E431C-V-UUM	=1E431C-VUUMX.
1E4327NX-ROO-LFO	=1E4327NX-ROOLFOX+LOC-5D2.
1E4327NXCP2-LFOC	=1E4327NXCP2LFOCX+LOC-5D2.
1E4327NXCP2-LFOO	=1E4327NXCP2LFOOX+LOC-5D2.
1E4327NY-ROO-LFO	=1E4327NY-ROOLFOX+LOC-5D2.
1E4327NYCP2-LFOC	=1E4327NYCP2LFOCX+LOC-5D2.
1E4327NYCP2-LFOO	=1E4327NYCP2LFOOX+LOC-5D2.
1E4327SX-ROO-LFO	=1E4327SX-ROOLFOX+LOC-5D2.
1E4327SXCP3-LFOO	=1E4327SXCP3LFOOX+LOC-5D2.
1E4327SXCP9-LFOO	=1E4327SXCP9LFOOX+LOC-5D2.
1E4327SY-ROO-LFO	=1E4327SY-ROOLFOX+LOC-5D2.
1E4327SYCP3-LFOO	=1E4327SYCP3LFOOX+LOC-5D2.
1E4327SYCP9-LFOO	=1E4327SYCP9LFOOX+LOC-5D2.
1E433AAX-AOO-LFO	=1E433AAX-AOOLFOX+LOC-5D2.
1E4362S1-ROO-LFO	=1E4362S1-ROOLFOX+LOC-5D2.
1E4362S1CP1-LFOO	=1E4362S1CP1LFOOX+LOC-5D2.
1E4362S2-ROO-LFO	=1E4362S2-ROOLFOX+LOC-5D2.
1E4362S2CP1-LFOO	=1E4362S2CP1LFOOX+LOC-5D2.
1EAP037A-UVO-LFO	=1EAP037A-UVOLFOX+LOC-4F2.
1EAP037B-UVO-LFO	=1EAP037B-UVOLFOX+LOC-4F2.
1EAP039-UVO-LFO	=1EAP039-UVOLFOX+LOC-4E4.
1EAP040A-UVO-LFO	=1EAP040A-UVOLFOX+LOC-4E4.
1EAP040B-UVO-LFO	=1EAP040B-UVOLFOX+LOC-4E4.
1EAP245A-DVO-LFO	=1EAP245A-DVOLFOX+LOC-5D2.
1EAP245B-DVO-LFO	=1EAP245B-DVOLFOX+LOC-5D2.
1EAP251-UVO-LFO	=1EAP251-UVOLFOX+LOC-4F2.
1EAP270-DVC-LFC	=1EAP270-DVCLFCX+LOC-4F2+LOC-4C1+LOC-4E2-2.
1EAP270-DVO-LFO	=1EAP270-DVOLFOX+LOC-4F2+LOC-4C1+LOC-4E2-2.
1EAP271-DVC-LFC	=1EAP271-DVCLFCX+LOC-4E4+LOC-4C1+LOC-4E2-1.
1EAP271-DVO-LFO	=1EAP271-DVOLFOX+LOC-4E4+LOC-4C1+LOC-4E2-1.
1EAP272-DVC-LFC	=1EAP272-DVCLFCX+LOC-5D2+2HP280.
1EAP272-DVO-LFO	=1EAP272-DVOLFOX+LOC-5D2+2HP280.
1EB1311X-BCO	=1EB1311XBCOX+LOC-8B1+2HP173.
1EB1312X-BCO	=1EB1312XBCOX+LOC-8B1.
1EB1313X-BCO	=1EB1313XBCOX+LOC-8B1.
1EB1315X-BCO	=1EB1315XBCOX+LOC-8B1.
1EB1611-BCO	=1EB1611BCOX.

Table E.4 (Continued)

Component to Location and Associated Cable Transformation

Component	Transformation
1EB16211-BCO	=1EB16211BCOX+LOC-4F2+2AP474.
1EB16212-BCO	=1EB16212BCOX+LOC-4E4+2AP476.
1EB18212-BCO	=1EB18212BCOX+LOC-4E4+2AP477.
1EB1X24X-BCO	=1EB1X24XBCOX+LOC-4F2+2AP056.
1EB1Y13X-BCO	=1EB1Y13XBCOX+LOC-4F2+2DG086.
1EB1Y1X-BCO	=1EB1Y1XBCOX+LOC-4F2+2LP034.
1EB1Y22X-BCO	=1EB1Y22XBCOX+LOC-4F2+2AP110.
1EB20211-BCO	=1EB20211BCOX+LOC-4F2+2AP475.
1EB211XX-BCO-LF	=1EB211XX-BCOLFX+LOC-4F2.
1EB211YX-BCO-LF	=1EB211YX-BCOLFX+LOC-4F2.
1EB212XX-BCO-LF	=1EB212XX-BCOLFX+LOC-4E4.
1EB212YX-BCO-LF	=1EB212YX-BCOLFX+LOC-4E4.
1EB221XX-BCO-LF	=1EB221XX-BCOLFX+LOC-4F2.
1EB221YX-BCO-LF	=1EB221YX-BCOLFX+LOC-4F2+2DC027+2DC028.
1EB233A-B-UUM	=1EB233A-BUUMX.
1EB233A-BCC-AS	=1EB233A-BCCASX+LOC-4F2+LOC-4C1+LOC-3D+2AP157+2AP158+2AP188.
1EB233A-BCC-LF	=1EB233A-BCCLFX+LOC-4F2.
1EB233A-BCO-AS	=1EB233A-BCOASX+LOC-4F2+LOC-4C1+LOC-3D+2AP157+2AP158+2AP188.
1EB233A-BCO-LF	=1EB233A-BCOLFX+LOC-4F2+2AP155.
1EB234B-B-UUM	=1EB234B-BUUMX.
1EB234B-BCC-CC	=1EB234B-BCCCCX+LOC-4E4+LOC-3D+LOC-OG+LOC-4C1+2AP200+2AP201 +2AP163+2AP162.
1EB234B-BCC-LF	=1EB234B-BCCLFX+LOC-4E4.
1EB234B-BCO-CC	=1EB234B-BCOCCX+LOC-4E4+LOC-3D+LOC-OG+LOC-4C1+2AP200+2AP201 +2AP163+2AP162.
1EB234B-BCO-LF	=1EB234B-BCOLFX+LOC-4E4+2AP160+2AP161.
1EB235A-B-UUM	=1EB235A-BUUMX.
1EB235A-BCO-AS	=1EB235A-BCOASX+LOC-4F2+LOC-4C1+2AP204+2AP205+2AP167+2AP166.
1EB235A-BCO-LF	=1EB235A-BCOLFX+LOC-4F2+2AP164+2AP165.
1EB235XA-B-UUM	=1EB235XA-BUUMX.
1EB235XA-BCO-CC	=1EB235XA-BCOCCX+LOC-4F2+LOC-4C1+2AP244+2AP245.
1EB235XA-BCO-LF	=1EB235XA-BCOLFX+LOC-4F2+2AP164.
1EB235YA-B-UUM	=1EB235YA-BUUMX.
1EB235YA-BCO-CC	=1EB235YA-BCOCCX+LOC-4F2+LOC-4C1+2AP249+2AP248.
1EB235YA-BCO-LF	=1EB235YA-BCOLFX+LOC-4F2+2AP165.
1EB236B-B-UUM	=1EB236B-BUUMX.
1EB236B-BCO-AS	=1EB236B-BCOASX+LOC-4E4+LOC-4C1+2AP246+2AP247+2AP171+2AP170.
1EB236B-BCO-LF	=1EB236B-BCOLFX+LOC-4E4+2AP168+2AP169.
1EB241Y1-FUS-LF	=1EB241Y1-FUSLFX+LOC-4F2.
1EB241Y2-FUS-LF	=1EB241Y2-FUSLFX+LOC-4F2.
1EB241Y3-FUS-LF	=1EB241Y3-FUSLFX+LOC-4F2.
1EB241Y4-FUS-LF	=1EB241Y4-FUSLFX+LOC-4F2.

Table E.4 (Continued)

Component to Location and Associated Cable Transformation

Component	Transformation
1EB242Y1-FUS-LF	=1EB242Y1-FUSLFX+LOC-4E4.
1EB242Y2-FUS-LF	=1EB242Y2-FUSLFX+LOC-4E4.
1EB242Y3-FUS-LF	=1EB242Y3-FUSLFX+LOC-4E4.
1EB242Y4-FUS-LF	=1EB242Y4-FUSLFX+LOC-4E4.
1EB2431X-FUS-LFO	=1EB2431X-FUSLFOX+LOC-5D2.
1EB2431Y-FUS-LFO	=1EB2431Y-FUSLFOX+LOC-5D2.
1EB2432X-FUS-LFO	=1EB2432X-FUSLFOX+LOC-5D2.
1EB2432Y-FUS-LFO	=1EB2432Y-FUSLFOX+LOC-5D2.
1EB2AX-BCO-LF	=1EB2AX-BCOLFX+LOC-4F2+2DC040.
1EB2BX-BCO-LF	=1EB2BX-BCOLFX+LOC-4E4+2DC045.
1EB2X-BCO-LF	=1EB2X-BCOLFX+LOC-4F2+2DC017.
1EB2X03X-BCO	=1EB2X03XBCOX+LOC-4E4+2EH097.
1EB2X24X-BCO	=1EB2X24XBCOX+LOC-4E4+2AP460.
1EB2Y14X-BCO	=1EB2Y14XBCOX+LOC-4E4+2DG078.
1EB2Y22X-BCO	=1EB2Y22XBCOX+LOC-4E4+2AP184.
1EB2Y4X-BCO	=1EB2Y4XBCOX+LOC-4E4+2RH174.
1EB332X-B-UUM	=1EB332X-BUUMX.
1EB332X-BCO-LF	=1EB332X-BCOLFX+LOC-3D+2AP312.
1EB34X1B-B-UUM	=1EB34X1B-BUUMX.
1EB34X1B-BCO-LF	=1EB34X1B-BCOLFX+LOC-3D+2AP320.
1EB34X2B-B-UUM	=1EB34X2B-BUUMX.
1EB34X2B-BCO-LF	=1EB34X2B-BCOLFX+LOC-3D+2AP321.
1EB35X1X-B-UUM	=1EB35X1X-BUUMX.
1EB35X1X-BCO-LF	=1EB35X1X-BCOLFX+LOC-4F2+2AP317.
1EB35X2X-B-UUM	=1EB35X2X-BUUMX.
1EB35X2X-BCO-LF	=1EB35X2X-BCOLFX+LOC-4F2+2AP318.
1EB35X3X-B-UUM	=1EB35X3X-BUUMX.
1EB35X3X-BCO-LF	=1EB35X3X-BCOLFX+LOC-4F2+2AP319.
1EB35Y1X-B-UUM	=1EB35Y1X-BUUMX.
1EB35Y1X-BCO-LF	=1EB35Y1X-BCOLFX+LOC-4F2+2AP315.
1EB35Y2X-B-UUM	=1EB35Y2X-BUUMX.
1EB35Y2X-BCO-LF	=1EB35Y2X-BCOLFX+LOC-4F2+2AP316.
1EB36X2X-B-UUM	=1EB36X2X-BUUMX.
1EB36X2X-BCO-LF	=1EB36X2X-BCOLFX+LOC-4E4+2AP332.
1EB36X3X-B-UUM	=1EB36X3X-BUUMX.
1EB36X3X-BCO-LF	=1EB36X3X-BCOLFX+LOC-4E4+2AP333.
1EB36XB-B-UUM	=1EB36XB-BUUMX.
1EB36XB-BCO-CC	=1EB36XB-BCOCCX+LOC-4E4+LOC-4C1+2AP251+2AP252.
1EB36XB-BCO-LF	=1EB36XB-BCOLFX+LOC-4E4+2AP168.
1EB36Y1X-B-UUM	=1EB36Y1X-BUUMX.
1EB36Y1X-BCO-LF	=1EB36Y1X-BCOLFX+LOC-4E4+2AP328.
1EB36Y2X-B-UUM	=1EB36Y2X-BUUMX.

Table E.4 (Continued)

Component to Location and Associated Cable Transformation

Component	Transformation
1EB36Y2X-BCO-LF	=1EB36Y2X-BCOLFX+LOC-4E4+2AP330.
1EB36Y3X-B-UUM	=1EB36Y3X-BUUMX.
1EB36Y3X-BCO-CC	=1EB36Y3X-BCOCCX.
1EB36Y3X-BCO-LF	=1EB36Y3X-BCOLFX+LOC-4E4+2AP381.
1EB36YB-B-UUM	=1EB36YB-BUUMX.
1EB36YB-BCO-CC	=1EB36YB-BCOCCX+LOC-4E4+LOC-4C1+2AP255+2AP256.
1EB36YB-BCO-LF	=1EB36YB-BCOLFX+LOC-4E4+2AP169.
1EB411A-BCC-CC	=1EB411A-BCCCCX+LOC-5C11-4+2AP088+2AP089+2AP093+2AP086 +2AP507+2AP094+2AP087.
1EB411A-BCC-LF	=1EB411A-BCCLFX+LOC-5C11-4.
1EB412A-BCC-CC	=1EB412A-BCCCCX+LOC-4F2+LOC-4C1+2AP099+2AP105+2AP098+2AP560 +2AP562+2AP097.
1EB412A-BCC-LF	=1EB412A-BCCLFX+LOC-4F2.
1EB412A-BCO-CC	=1EB412A-BCOCCX+LOC-4F2+LOC-4C1+2AP099+2AP105+2AP098+2AP560 +2AP562+2AP097.
1EB412A-BCO-LF	=1EB412A-BCOLFX+LOC-4F2.
1EB413A-B-UUM	=1EB413A-BUUMX.
1EB413A-BOO-CC	=1EB413A-BOOCCX+LOC-4F2+LOC-4C1+LOC-4E2-2+LOC-7B3+2DG069 +2DG070+2DG121+2DG119+2DG075+2DG053+2DG120+2DG212.
1EB413A-BOO-LF	=1EB413A-BOOLFX+LOC-4F2.
1EB415A-B-UUM	=1EB415A-BUUMX.
1EB415A-BCC-CC	=1EB415A-BCCCCX+LOC-4F2+LOC-4C1+2AP104.
1EB415A-BCC-LF	=1EB415A-BCCLFX+LOC-4F2.
1EB415A-BOC-CC	=1EB415A-BOCCCX+LOC-4F2+LOC-4C1+2AP104.
1EB415A-BOC-LF	=1EB415A-BOCLFX+LOC-4F2.
1EB415A-BOO-CC	=1EB415A-BOOCCX+LOC-4F2+LOC-4C1+2AP104.
1EB415A-BOO-LF	=1EB415A-BOOLFX+LOC-4F2.
1EB422B-BCC-CC	=1EB422B-BCCCCX+LOC-4E4+LOC-4C1+2AP125+2AP122+2AP124+2AP563 +2AP565+2AP564+2AP123.
1EB422B-BCC-LF	=1EB422B-BCCLFX+LOC-4E4.
1EB422B-BCO-CC	=1EB422B-BCOCCX+LOC-4E4+LOC-4C1+2AP125+2AP122+2AP124+2AP563 +2AP565+2AP564+2AP123.
1EB422B-BCO-LF	=1EB422B-BCOLFX+LOC-4E4.
1EB423B-B-UUM	=1EB423B-BUUMX.
1EB423B-BOO-CC	=1EB423B-BOOCCX+LOC-4E4+LOC-4C1+LOC-4E2-1+LOC-8B2+2DG024 +2DG124+2DG088+2DG123+2DG127+2DG210+2DG010.
1EB423B-BOO-LF	=1EB423B-BOOLFX+LOC-4E4.
1EB425B-B-UUM	=1EB425B-BUUMX.
1EB425B-BCC-CC	=1EB425B-BCCCCX+LOC-4E4+LOC-4C1+2AP133.
1EB425B-BCC-LF	=1EB425B-BCCLFX+LOC-4E4.
1EB425B-BCO-CC	=1EB425B-BCOCCX+LOC-4E4+LOC-4C1+2AP133.
1EB425B-BCO-LF	=1EB425B-BCOLFX+LOC-4E4.

Table E.4 (Continued)

Component to Location and Associated Cable Transformation

Component	Transformation
1EB431X-BCO-LF	=1EB431X-BCOLFX+LOC-5D2+2DC074.
1EB432C-BCC-CC	=1EB432C-BCCCCX+LOC-5D2+LOC-4C1+LOC-8B1+2HP163+2HP157+2HP158 +2HP156+2HP161+2HP172.
1EB432C-BCC-LF	=1EB432C-BCCLFX+LOC-5D2.
1EB432C-BCO-CC	=1EB432C-BCOCCX+LOC-5D2+LOC-4C1+LOC-8B1+2HP163+2HP157+2HP158 +2HP156+2HP161+2HP172.
1EB432C-BCO-LF	=1EB432C-BCOLFX+LOC-5D2.
1EB433C-B-UUM	=1EB433C-BUUMX.
1EB433C-BOO-CC	=1EB433C-BOOCCX+LOC-5D2+LOC-4C1+LOC-8B1+2HP170+2HP171+2HP167 +2HP168+2HP169.
1EB433C-BOO-LF	=1EB433C-BOOLFX+LOC-5D2.
1EB43C-B-UUM	=1EB43C-BUUMX.
1EB43C-BCO-AS	=1EB43C-BCOASX+LOC-5D2+LOC-4C1+2HP078.
1EB43C-BCO-LF	=1EB43C-BCOLFX+LOC-5D2+2HP043.
1EB6Y3F1-BCO	=1EB6Y3F1BCOX+LOC-5B6+2EH011+2EH099.
1EBAT2AX-ZBT-LF	=1EBAT2AX-ZBTLFX+LOC-5C11-4+2DC030+2DC031.
1EBAT2BX-ZBT-LF	=1EBAT2BX-ZBTLFX+LOC-4E4+2DC032+2DC033.
1EBAT2CX-ZBT-LF	=1EBAT2CX-ZBTLFX+LOC-5D2+2DC046.
1EBAT2X-ZBT-LF	=1EBAT2X-ZBTLFX+LOC-4F2+2DC010+2DC011.
1EBD32332-BCO	=1EBD32332BCOX+LOC-3F-1+2IN010.
1EBD434X2-BCO	=1EBD434X2BCOX+LOC-3F-1+2IN012.
1EDC2A-250-LF	=1EDC2A-250LFX+LOC-4F2.
1EDC2AA-125-LF	=1EDC2AA-125LFX+LOC-4F2.
1EDC2BB-125-LF	=1EDC2BB-125LFX+LOC-4E4.
1EDC2DEP-FROP-4	=1EDC2DEP-FROP4X.
1EF1211-FUS-LF	=1EF1211-FUSLFX+LOC-4F2.
1EF1212-FUS-LF	=1EF1212-FUSLFX+LOC-4E4.
1EF2211-FUS-LF	=1EF2211-FUSLFX+LOC-4F2.
1EF2212-FUS-LF	=1EF2212-FUSLFX+LOC-4E4.
1EF3211-FUS-LF	=1EF3211-FUSLFX+LOC-4F2.
1EF3212-FUS-LF	=1EF3212-FUSLFX+LOC-4E4.
1EF4211-FUS-LF	=1EF4211-FUSLFX+LOC-4F2.
1EF4212-FUS-LF	=1EF4212-FUSLFX+LOC-4E4.
1EG0EX-QCO-OE	=1EG0EX-QCOOEX+LOC-4C1.
1EG0EXCPN-LFCO	=1EG0EXCPNLFCOX+LOC-4C1.
1EG0K98A-ROO-LFO	=1EG0K98A-ROOLFOX+LOC-4E2-2.
1EG0K98ACP1-LFOO	=1EG0K98ACP1LFOOX+LOC-4E2-2.
1EGAK117CP3-LFCO	=1EGAK117CP3LFCOX+LOC-4E2-1.
1EGAK98B-ROO-LFO	=1EGAK98B-ROOLFOX+LOC-4E2-1.
1EGAK98BCP1-LFOO	=1EGAK98BCP1LFOOX+LOC-4E2-1.
1EK18A1BCP6-LFOO	=1EK18A1BCP6LFOOX+LOC-7B3.
1EK18ABCP6-LFOO	=1EK18ABCP6LFOOX+LOC-8B2.

Table E.4 (Continued)

Component to Location and Associated Cable Transformation

Component	Transformation
1EK18ARC-ROO-LFO	=1EK18ARC-ROOLFOX+LOC-8B2.
1ER3C2A-REC-LF	=1ER3C2A-RECLFX+LOC-4F2+2DC014.
1EREC23C-REC-LF	=1EREC23C-RECLFX+LOC-5D2+2DC044.
1EREC2AA-REC-LF	=1EREC2AA-RECLFX+LOC-4F2+2DC036.
1EREC2BB-REC-LF	=1EREC2BB-RECLFX+LOC-4E4+2DC041.
1ET235YX-TFM-LF	=1ET235YX-TFMLFX+LOC-4F2+2AP165.
1ET236XX-TFM-LF	=1ET236XX-TFMLFX+LOC-4E4+2AP168.
1ET236YX-TFM-LF	=1ET236YX-TFMLFX+LOC-4E4+2AP169.
1ET243X-TFM-LF	=1ET243X-TFMLFX+LOC-5D2+2HP134.
1ET34XB-TFM-LF	=1ET34XB-TFMLFX+LOC-3D.
1ET35XX-TFM-LF	=1ET35XX-TFMLFX+LOC-4F2.
213CB16-BCO	=213CB16BCOX+LOC-8B1+2HP086.
21N001-OOO-FSL	=21N001-OOOFSLX.
21N001-OOO-LFO	=21N001-OOOLFOX+LOC-3I4+2NB018.
21N009-OOO-FSL	=21N009-OOOFSLX.
21N009-OOO-LFO	=21N009-OOOLFOX+LOC-3I4+2NB017.
21N015AX-OCO-FSL	=21N015AX-OCOFSLX.
21N015AX-OCO-LFO	=21N015AX-OCOLFOX+LOC-5B4.
21N015BX-OCO-FSL	=21N015BX-OCOFSLX.
21N015BX-OCO-LFO	=21N015BX-OCOLFOX+LOC-5B4.
21N015CX-OCO-FSL	=21N015CX-OCOFSLX.
21N015CX-OCO-LFO	=21N015CX-OCOLFOX+LOC-5B3.
21N015DX-OCO-FSL	=21N015DX-OCOFSLX.
21N015DX-OCO-LFO	=21N015DX-OCOLFOX+LOC-5B3.
21N024AX-OCO-FSL	=21N024AX-OCOFSLX.
21N024AX-OCO-LFO	=21N024AX-OCOLFOX+LOC-3E+2RP056.
21N024BX-OCO-FSL	=21N024BX-OCOFSLX.
21N024BX-OCO-LFO	=21N024BX-OCOLFOX+LOC-3E+2RP060.
21N024CX-OCO-FSL	=21N024CX-OCOFSLX.
21N024CX-OCO-LFO	=21N024CX-OCOLFOX+LOC-3E+2RP064.
21N024DX-OCO-FSL	=21N024DX-OCOFSLX.
21N024DX-OCO-LFO	=21N024DX-OCOLFOX+LOC-3E+2RP068.
21N026AX-OCO-FSL	=21N026AX-OCOFSLX.
21N026AX-OCO-LFO	=21N026AX-OCOLFOX+LOC-3E.
21N026BX-OCO-FSL	=21N026BX-OCOFSLX.
21N026BX-OCO-LFO	=21N026BX-OCOLFOX+LOC-3E.
21N026CX-OCO-FSL	=21N026CX-OCOFSLX.
21N026CX-OCO-LFO	=21N026CX-OCOLFOX+LOC-3E.
21N026DX-OCO-FSL	=21N026DX-OCOFSLX.
21N026DX-OCO-LFO	=21N026DX-OCOLFOX+LOC-3E.
21N031A-OOO-FSL	=21N031A-OOOFSLX.
21N031A-OOO-LFO	=21N031A-OOOLFOX+LOC-3E+2HP096.

Table E.4 (Continued)

Component to Location and Associated Cable Transformation

Component	Transformation
21N031B-000-FSL	=21N031B-000FSLX.
21N031B-000-LFO	=21N031B-000LFOX+LOC-3E+2HP101.
21N031C-000-FSL	=21N031C-000FSLX.
21N031C-000-LFO	=21N031C-000LFOX+LOC-3E+2HP097.
21N031D-000-FSL	=21N031D-000FSLX.
21N031D-000-LFO	=21N031D-000LFOX+LOC-3E+2HP102.
21N037A-LSC-FSL	=21N037A-LSCFSLX.
21N037A-LSC-LFC	=21N037A-LSCLFCX+LOC-3E+2LP036.
21N037A-000-FSL	=21N037A-000FSLX.
21N037A-000-LFO	=21N037A-000LFOX+LOC-3E.
21N037B-LSC-FSL	=21N037B-LSCFSLX.
21N037B-LSC-LFC	=21N037B-LSCLFCX+LOC-3E+2RH259.
21N037B-000-FSL	=21N037B-000FSLX.
21N037B-000-LFO	=21N037B-000LFOX+LOC-3E.
21N037C-LSC-FSL	=21N037C-LSCFSLX.
21N037C-LSC-LFC	=21N037C-LSCLFCX+LOC-3E+2LP036.
21N037C-000-FSL	=21N037C-000FSLX.
21N037C-000-LFO	=21N037C-000LFOX+LOC-3E.
21N037D-LSC-FSL	=21N037D-LSCFSLX.
21N037D-LSC-LFC	=21N037D-LSCLFCX+LOC-3E+2RH259.
21N037D-000-FSL	=21N037D-000FSLX.
21N037D-000-LFO	=21N037D-000LFOX+LOC-3E.
21N038A-000-FSL	=21N038A-000FSLX.
21N038A-000-LFO	=21N038A-000LFOX+LOC-3E+2NB014.
21N038B-000-FSL	=21N038B-000FSLX.
21N038B-000-LFO	=21N038B-000LFOX+LOC-3E+2NB049.
21N047A-000-FSL	=21N047A-000FSLX.
21N047A-000-LFO	=21N047A-000LFOX+LOC-3E+2HP094.
21N047B-000-FSL	=21N047B-000FSLX.
21N047B-000-LFO	=21N047B-000LFOX+LOC-3E+2HP099.
21N047C-000-FSL	=21N047C-000FSLX.
21N047C-000-LFO	=21N047C-000LFOX+LOC-3E+2HP095.
21N047D-000-FSL	=21N047D-000FSLX.
21N047D-000-LFO	=21N047D-000LFOX+LOC-3E+2HP100.
21N048A-000-FSL	=21N048A-000FSLX.
21N048A-000-LFO	=21N048A-000LFOX+LOC-3E.
21N048A-PSC-FSL	=21N048A-PSCFSLX.
21N048A-PSC-LFC	=21N048A-PSCLFCX+LOC-3E+2LP036.
21N048B-000-FSL	=21N048B-000FSLX.
21N048B-000-LFO	=21N048B-000LFOX+LOC-3E.
21N048B-PSC-FSL	=21N048B-PSCFSLX.
21N048B-PSC-LFC	=21N048B-PSCLFCX+LOC-3E+2RH293.

Table E.4 (Continued)

Component to Location and Associated Cable Transformation

Component	Transformation
21N048C-OOO-FSL	=21N048C-OOOFSLX.
21N048C-OOO-LFO	=21N048C-OOOLFOX+LOC-3E.
21N048C-PSC-FSL	=21N048C-PSCFSLX.
21N048C-PSC-LFC	=21N048C-PSCLFCX+LOC-3E+2LP036.
21N048D-OOO-FSL	=21N048D-OOOFSLX.
21N048D-OOO-LFO	=21N048D-OOOLFOX+LOC-3E.
21N048D-PSC-FSL	=21N048D-PSCFSLX.
21N048D-PSC-LFC	=21N048D-PSCLFCX+LOC-3E+2RH293.
21N056AX-OCO-FSL	=21N056AX-OCOFSLX.
21N056AX-OCO-LFO	=21N056AX-OCOLFOX+LOC-5A3-5+2PC028.
21N056BX-OCO-FSL	=21N056BX-OCOFSLX.
21N056BX-OCO-LFO	=21N056BX-OCOLFOX+LOC-5A3-5+2PC030.
21N056CX-OCO-FSL	=21N056CX-OCOFSLX.
21N056CX-OCO-LFO	=21N056CX-OCOLFOX+LOC-5A3-10+2PC029.
21N056DX-OCO-FSL	=21N056DX-OCOFSLX.
21N056DX-OCO-LFO	=21N056DX-OCOLFOX+LOC-5A3-10+2PC031.
21N413-OOO-FSL	=21N413-OOOFSLX.
21N413-OOO-LFO	=21N413-OOOLFOX+LOC-3E+2LP040.
21N413A-OOO-FSL	=21N413A-OOOFSLX.
21N413A-OOO-LFO	=21N413A-OOOLFOX+LOC-3E+2LP040.
21N413BX-OOO-FSL	=21N413BX-OOOFSLX.
21N413BX-OOO-LFO	=21N413BX-OOOLFOX+LOC-3E.
21N413C-OOO-FSL	=21N413C-OOOFSLX.
21N413C-OOO-LFO	=21N413C-OOOLFOX+LOC-3I4+2LP040.
21N413DX-OOO-FSL	=21N413DX-OOOFSLX.
21N413DX-OOO-LFO	=21N413DX-OOOLFOX+LOC-3E.
22C1AAX-AOO-LFO	=22C1AAX-AOOLFOX+LOC-5D2.
22N048D-OOO-FSL	=22N048D-OOOFSLX.
22N048D-OOO-LFO	=22N048D-OOOLFOX+LOC-3E.
2431B6DX-B-UUM	=2431B6DX-BUUMX.
2431B6DX-BCO-LF	=2431B6DX-BCOLFX+LOC-5D2+2VD065.
27AP251CP3-LFOC	=27AP251CP3LFOCX+LOC-4F2.
27AP251CP3-LFOO	=27AP251CP3LFOOX+LOC-4F2.
2C11C001A-BCO-CC	=2C11C001A-BCOCCX+LOC-4F2+LOC-4C1+LOC-3I2+2RD014.
2C11C001A-BCO-LF	=2C11C001A-BCOLFX+LOC-4F2+2RD010.
2C11C001A-PMS-LF	=2C11C001A-PMSLFX+LOC-3I2.
2C11C001B-B-UUM	=2C11C001B-BUUMX.
2C11C001B-BOO-CC	=2C11C001B-BOOCCX+LOC-4E4+LOC-4C1+LOC-3I2+2RD022.
2C11C001B-BOO-LF	=2C11C001B-BOOLFX+LOC-4E4+2RD018.
2C11C001B-P-UUM	=2C11C001B-PUUMX.
2C11C001B-PMS-LF	=2C11C001B-PMSLFX+LOC-3I2.
2C11D002A-STR-LF	=2C11D002A-STRLFX.

Table E.4 (Continued)

Component to Location and Associated Cable Transformation

Component	Transformation
2C11D002B-STR-LF	=2C11D002B-STRLFX.
2C11D003A-FIL-LF	=2C11D003A-FILLFX.
2C11D003B-FIL-LF	=2C11D003B-FILLFX.
2C11D010-FIL-LF	=2C11D010-FILLFX.
2C11D300-FIL-LF	=2C11D300-FILLFX.
2C11F001A-RCO-LF	=2C11F001A-RCOLFX.
2C11F001B-RCO-LF	=2C11F001B-RCOLFX.
2C11F002A-NOC-CC	=2C11F002A-NOCCCX+LOC-3E+LOC-4C1+2RD040+2RD037+2RD049.
2C11F002A-NOC-LF	=2C11F002A-NOCLFX+LOC-3E.
2C11F002B-NCC-CC	=2C11F002B-NCCCCX+LOC-3E+LOC-4C1+2RD041+2RD037+2RD049.
2C11F002B-NCC-LF	=2C11F002B-NCCLFX+LOC-3E.
2C11F003-VOC-CC	=2C11F003-VOCCCX+LOC-3E+LOC-3F-1+LOC-4C1+2RD027+2RD028.
2C11F003-VOC-LF	=2C11F003-VOCLFX.
2C11F004-XCC-LF	=2C11F004-XCCLFX.
2C11F013A-XOC-LF	=2C11F013A-XOCLFX.
2C11F013B-XCC-LF	=2C11F013B-XCCLFX.
2C11F014A-COC-LF	=2C11F014A-COCLFX.
2C11F014B-CCC-LF	=2C11F014B-CCCLFX.
2C11F020A-XOC-LF	=2C11F020A-XOCLFX.
2C11F020B-XCC-LF	=2C11F020B-XCCLFX.
2C11F021A-XOC-LF	=2C11F021A-XOCLFX.
2C11F021B-XCC-LF	=2C11F021B-XCCLFX.
2C11F046A-XOC-LF	=2C11F046A-XOCLFX.
2C11F046B-XCC-LF	=2C11F046B-XCCLFX.
2C11F047A-XOC-LF	=2C11F047A-XOCLFX.
2C11F047B-XCC-LF	=2C11F047B-XCCLFX.
2C11F060-XOC-LF	=2C11F060-XOCLFX.
2C11F061-XOC-LF	=2C11F061-XOCLFX.
2C11F114-XOC-LF	=2C11F114-XOCLFX.
2C11F115-XOC-LF	=2C11F115-XOCLFX.
2C11F116-XCC-LF	=2C11F116-XCCLFX.
2C11F117-XCC-LF	=2C11F117-XCCLFX.
2C34K10-LFO	=2C34K10LFOX+LOC-4E2-1.
2C34K1AM1R1-LFOO	=2C34K1AM1R1LFOOX+LOC-4E2-1.
2C34K2AM1R1-LFOO	=2C34K2AM1R1LFOOX+LOC-4E2-1.
2C34K655-CND-LFO	=2C34K655-CNDLFOX+LOC-4E2-1.
2C34K659-CND-LFO	=2C34K659-CNDLFOX+LOC-4E2-1+2FW195+2FW196+2FW197+2FW202 +2FW203+2FW204+2FW205+2FW206+2FW207.
2C34R602-CAL-LFO	=2C34R602-CALLFOX+LOC-4E2-1.
2CD112X-XOC-LF	=2CD112X-XOCLFX.
2CY01AX-XCC-LF	=2CY01AX-XCCLFX.
2CY028X-XCC-LF	=2CY028X-XCCLFX.

Table E.4 (Continued)

Component to Location and Associated Cable Transformation

Component	Transformation
2DG01PK18CA-LFOO	=2DG01PK18CALFOOX+LOC-8B2.
2DG01PSC-OOO-LFO	=2DG01PSC-OOOLFOX+LOC-8B2.
2DG1PK18-ROO-LFO	=2DG1PK18-ROOLFOX+LOC-8B2.
2HSFW032-Q-OE-O	=2HSFW032-Q-OEOX+LOC-4C1.
2HSFW032-QOO-LFO	=2HSFW032-QOOLFOX+LOC-4C1.
2HSFW03233T-LFCO	=2HSFW03233TLFCOX+LOC-4C1.
2IA042X-XOC-LF	=2IA042X-XOCLFX.
2PSFW086-OOO-LFO	=2PSFW086-OOOLFOX+LOC-5A2-1.
2PSFW087-OOO-LFO	=2PSFW087-OOOLFOX+LOC-5A2-2.
2PSFW167-OCO-FSL	=2PSFW167-OCOFSLX.
2PSFW167-OCO-LFO	=2PSFW167-OCOLFOX+LOC-5B10+2FW230.
2VQ034B-B-UUM	=2VQ034B-BUUMX.
2VQ034B-BCO-LF	=2VQ034B-BCOLFX+LOC-3F-2+2VQ047.
2VQ034B-V-UUM	=2VQ034B-VUUMX.
2VQ034B-VCC-CC	=2VQ034B-VCCCCX+LOC-3D+LOC-4C1+LOC-3F-2+LOC-4E2-1+2VQ049 +2VQ136+2VQ154+2VQ048.
2VQ034B-VCC-LF	=2VQ034B-VCCLFX+LOC-3D.
2VQ036A-B-UUM	=2VQ036A-BUUMX.
2VQ036A-BCO-LF	=2VQ036A-BCOLFX+LOC-3F-1+2VQ053.
2VQ036A-V-UUM	=2VQ036A-VUUMX.
2VQ036A-VCC-CC	=2VQ036A-VCCCCX+LOC-3D+LOC-3F-1+LOC-4C1+2VQ054+2VQ055+2VQ138 +2VQ156.
2VQ036A-VCC-LF	=2VQ036A-VCCLFX+LOC-3D.
2VQ041A-B-UUM	=2VQ041A-BUUMX.
2VQ041A-BCO-LF	=2VQ041A-BCOLFX+LOC-3F-1+2VQ084.
2VQ041A-V-UUM	=2VQ041A-VUUMX.
2VQ041A-VCC-CC	=2VQ041A-VCCCCX+LOC-4B-1+LOC-3F-1+LOC-4C1+LOC-3F-1+2VQ085 +2VQ086.
2VQ041A-VCC-LF	=2VQ041A-VCCLFX+LOC-4B-1.
2WR001A-COC-LF	=2WR001A-COCLFX.
2WR001B-COC-LF	=2WR001B-COCLFX.
2WR002A-XOC-LF	=2WR002A-XOCLFX.
2WR002B-XOC-LF	=2WR002B-XOCLFX.
2WR003A-XOC-LF	=2WR003A-XOCLFX.
2WR003B-XOC-LF	=2WR003B-XOCLFX.
2WR004A-XOC-LF	=2WR004A-XOCLFX.
2WR004B-XOC-LF	=2WR004B-XOCLFX.
2WR01AA-HTX-LFB	=2WR01AA-HTXLFBX.
2WR01AA-HTX-LFI	=2WR01AA-HTXLFIX.
2WR01AB-HTX-LFB	=2WR01AB-HTXLFBX.
2WR01AB-HTX-LFI	=2WR01AB-HTXLFIX.

Table E.4 (Continued)

Component to Location and Associated Cable Transformation

Component	Transformation
2WR01PA-BCO-CC	=2WR01PA-BCOCCX+LOC-3D+LOC-4E2-1+LOC-4C1+2WR033+2WR034 +2WR011.
2WR01PA-BCO-LF	=2WR01PA-BCOLFX+LOC-3D+2WR010.
2WR01PA-PMS-FR	=2WR01PA-PMSFRX+LOC-3D.
2WR01PB-BCO-CC	=2WR01PB-BCOCCX+LOC-3D+LOC-4C1+2WR014+2WR015.
2WR01PB-BCO-LF	=2WR01PB-BCOLFX+LOC-3D+2WR013.
2WR01PB-PMS-FR	=2WR01PB-PMSFRX+LOC-3D.
2WR01TX-TNK-LF	=2WR01TX-TNKLFX.
2WR02MA-STR-LF	=2WR02MA-STRLFX.
2WR02MB-STR-LF	=2WR02MB-STRLFX.
2WR041A-XOC-LF	=2WR041A-XOCLFX.
2WR041B-XOC-LF	=2WR041B-XOCLFX.
2WR042A-XOC-LF	=2WR042A-XOCLFX.
2WR042B-XOC-LF	=2WR042B-XOCLFX.
2WR043A-XOC-LF	=2WR043A-XOCLFX.
2WR043B-XOC-LF	=2WR043B-XOCLFX.
2WR06MA-STR-LF	=2WR06MA-STRLFX.
2WR06MB-STR-LF	=2WR06MB-STRLFX.
2WR06MC-STR-LF	=2WR06MC-STRLFX.
2WR06MD-STR-LF	=2WR06MD-STRLFX.
2WR094X-XOC-LF	=2WR094X-XOCLFX.
2WR096X-XCO-LF	=2WR096X-XCOLFX.
2WR166A-SOC-LF	=2WR166A-SOCLFX+LOC-3E+2IN016.
2WR166B-SOC-LF	=2WR166B-SOCLFX+LOC-3E+2IN019.
2WR167A-RCO-LF	=2WR167A-RCOLFX.
2WR167B-RCO-LF	=2WR167B-RCOLFX.
2WR168A-POC-LF	=2WR168A-POCLFX+LOC-3E.
2WR168B-POC-LF	=2WR168B-POCLFX+LOC-3E.
2WR169A-XOC-LF	=2WR169A-XOCLFX.
2WR169B-XOC-LF	=2WR169B-XOCLFX.
2WR174A-XOC-LF	=2WR174A-XOCLFX.
2WR174B-XOC-LF	=2WR174B-XOCLFX.
2WR178X-XOC-LF	=2WR178X-XOCLFX.
2WR193A-XOC-LF	=2WR193A-XOCLFX.
2WR193B-XOC-LF	=2WR193B-XOCLFX.
2WR220A-COC-LF	=2WR220A-COCLFX.
2WR220B-COC-LF	=2WR220B-COCLFX.
2WRPS01-PIP-LFR	=2WRPS01-PIPLFRX.
31N007B-OOC-FSL	=31N007B-OOCFSLX.
31N007B-OOC-LFC	=31N007B-OOCLFCX+LOC-3I4+2RI100.
31N008AX-OCO-FSL	=31N008AX-OCOFSLX.
31N008AX-OCO-LFO	=31N008AX-OCOLFOX+LOC-3G-1.

Table E.4 (Continued)

Component to Location and Associated Cable Transformation

Component	Transformation
31N008BX-OCO-FSL	=31N008BX-OCOFSLX.
31N008BX-OCO-LFO	=31N008BX-OCOLFOX+LOC-3G-1.
31N008CX-OCO-FSL	=31N008CX-OCOFSLX.
31N008CX-OCO-LFO	=31N008CX-OCOLFOX+LOC-3G-1.
31N008DX-OCO-FSL	=31N008DX-OCOFSLX.
31N008DX-OCO-LFO	=31N008DX-OCOLFOX+LOC-3G-1.
31N009AX-OCO-FSL	=31N009AX-OCOFSLX.
31N009AX-OCO-LFO	=31N009AX-OCOLFOX+LOC-3G-1.
31N009BX-OCO-FSL	=31N009BX-OCOFSLX.
31N009BX-OCO-LFO	=31N009BX-OCOLFOX+LOC-3G-1.
31N009CX-OCO-FSL	=31N009CX-OCOFSLX.
31N009CX-OCO-LFO	=31N009CX-OCOLFOX+LOC-3G-1.
31N009DX-OCO-FSL	=31N009DX-OCOFSLX.
31N009DX-OCO-LFO	=31N009DX-OCOLFOX+LOC-3G-1.
31N010AX-OCO-FSL	=31N010AX-OCOFSLX.
31N010AX-OCO-LFO	=31N010AX-OCOLFOX+LOC-3G-1.
31N010BX-OCO-FSL	=31N010BX-OCOFSLX.
31N010BX-OCO-LFO	=31N010BX-OCOLFOX+LOC-3G-1.
31N010CX-OCO-FSL	=31N010CX-OCOFSLX.
31N010CX-OCO-LFO	=31N010CX-OCOLFOX+LOC-3G-1.
31N010DX-OCO-FSL	=31N010DX-OCOFSLX.
31N010DX-OCO-LFO	=31N010DX-OCOLFOX+LOC-3G-1.
31N011AX-OCO-FSL	=31N011AX-OCOFSLX.
31N011AX-OCO-LFO	=31N011AX-OCOLFOX+LOC-3G-1.
31N011BX-OCO-FSL	=31N011BX-OCOFSLX.
31N011BX-OCO-LFO	=31N011BX-OCOLFOX+LOC-3G-1.
31N011CX-OCO-FSL	=31N011CX-OCOFSLX.
31N011CX-OCO-LFO	=31N011CX-OCOLFOX+LOC-3G-1.
31N011DX-OCO-FSL	=31N011DX-OCOFSLX.
31N011DX-OCO-LFO	=31N011DX-OCOLFOX+LOC-3G-1.
31N012AX-OOO-FSL	=31N012AX-OOOFSLX.
31N012AX-OOO-LFO	=31N012AX-OOOLFOX+LOC-3I5.
31N012BX-OOO-FSL	=31N012BX-OOOFSLX.
31N012BX-OOO-LFO	=31N012BX-OOOLFOX+LOC-3I3.
31N013A-OOC-FSL	=31N013A-OOCFSLX.
31N013A-OOC-LFC	=31N013A-OOCLFCX+LOC-3I4+2RI161.
31N013B-OOC-FSL	=31N013B-OOCFSLX.
31N013B-OOC-LFC	=31N013B-OOCLFCX+LOC-3I4+2RI101.
31N022A-OOC-FSL	=31N022A-OOCFSLX.
31N022A-OOC-LFC	=31N022A-OOCLFCX+LOC-3I4+2RI161.
31N022B-OOC-FSL	=31N022B-OOCFSLX.
31N022B-OOC-LFC	=31N022B-OOCLFCX+LOC-3I4+2RI100.

Table E.4 (Continued)

Component to Location and Associated Cable Transformation

Component	Transformation
31N022C-OOC-FSL	=31N022C-OOCFSLX.
31N022C-OOC-LFC	=31N022C-OOCLFCX+LOC-3I4+2RI161.
31N022D-OOC-FSL	=31N022D-OOCFSLX.
31N022D-OOC-LFC	=31N022D-OOCLFCX+LOC-3I4+2RI100.
31N601B-OOC-LFC	=31N601B-OOCLFCX+LOC-3I4+LOC-4C1.
31N602A-OOC-LFC	=31N602A-OOCLFCX+LOC-3I4+LOC-4C1.
31N602B-OOC-LFC	=31N602B-OOCLFCX+LOC-3I4+LOC-4C1.
31N603A-OOC-LFC	=31N603A-OOCLFCX+LOC-3I4+LOC-4C1.
31N604AX-OCO-LFO	=31N604AX-OCOLFOX+LOC-4C1+LOC-3K.
31N604BX-OCO-LFO	=31N604BX-OCOLFOX+LOC-4C1+LOC-3K.
31N604CX-OCO-LFO	=31N604CX-OCOLFOX+LOC-4C1+LOC-3K.
31N604DX-OCO-LFO	=31N604DX-OCOLFOX+LOC-4C1+LOC-3K.
31N608AX-OCO-LFO	=31N608AX-OCOLFOX+LOC-4C1+LOC-3I4.
31N608BX-OCO-LFO	=31N608BX-OCOLFOX+LOC-3I4+LOC-4C1.
31N608CX-OCO-LFO	=31N608CX-OCOLFOX+LOC-4C1+LOC-3I4.
31N608DX-OCO-LFO	=31N608DX-OCOLFOX+LOC-3I4+LOC-4C1.
31N612A-OOC-LFC	=31N612A-OOCLFCX+LOC-3K+LOC-4C1.
31N612B-OOC-LFC	=31N612B-OOCLFCX+LOC-3K+LOC-4C1.
31N613A-OOC-LFC	=31N613A-OOCLFCX+LOC-3K+LOC-4C1.
31N613B-OOC-LFC	=31N613B-OOCLFCX+LOC-3K+LOC-4C1.
31N614AX-OCO-LFO	=31N614AX-OCOLFOX+LOC-4C1+LOC-3I4.
31N614BX-OCO-LFO	=31N614BX-OCOLFOX+LOC-3I4+LOC-4C1.
31N614CX-OCO-LFO	=31N614CX-OCOLFOX+LOC-4C1+LOC-3I4.
31N614DX-OCO-LFO	=31N614DX-OCOLFOX+LOC-3I4+LOC-4C1.
31N615AX-OCO-LFO	=31N615AX-OCOLFOX+LOC-4C1+LOC-3K.
31N615BX-OCO-LFO	=31N615BX-OCOLFOX+LOC-4C1+LOC-3K.
31N615CX-OCO-LFO	=31N615CX-OCOLFOX+LOC-4C1+LOC-3K.
31N615DX-OCO-LFO	=31N615DX-OCOLFOX+LOC-4C1+LOC-3K.
33N018AX-OOO-FSL	=33N018AX-OOOFSLX.
33N018AX-OOO-LFO	=33N018AX-OOOLFOX+LOC-3I5.
33N018BX-OOO-FSL	=33N018BX-OOOFSLX.
33N018BX-OOO-LFO	=33N018BX-OOOLFOX+LOC-3I3.
34R601A3-CND-LFO	=34R601A3-CNDLFOX+LOC-4E2-1.
34R601B3-CND-LFO	=34R601B3-CNDLFOX+LOC-4E2-1.
36X2BD3X-B-UUM	=36X2BD3X-BUUMX.
36X2BD3X-BCO-LF	=36X2BD3X-BCOLFX+LOC-4E4+2VD059.
51N012A-OOC-FSL	=51N012A-OOCFSLX.
51N012A-OOC-LFC	=51N012A-OOCLFCX+LOC-3I4+2RI104.
51N012B-OOC-FSL	=51N012B-OOCFSLX.
51N012B-OOC-LFC	=51N012B-OOCLFCX+LOC-3I4+2RI100.
51N012C-OOC-FSL	=51N012C-OOCFSLX.
51N012C-OOC-LFC	=51N012C-OOCLFCX+LOC-3I4+2RI104.

Table E.4 (Continued)

Component to Location and Associated Cable Transformation

Component	Transformation
51N012D-OOC-FSL	=51N012D-OOCFSLX.
51N012D-OOC-LFC	=51N012D-OOCLFCX+LOC-3I4+2RI100.
9AFPE19X-CPC-LFC	=9AFPE19X-CPCLFCX+LOC-8B1.
9AGPE19X-CPC-LFC	=9AGPE19X-CPCLFCX+LOC-8B2.
ADARK10A-ROO-LFO	=ADARK10A-ROOLFOX+LOC-4E2-2.
ADARK10B-ROO-LFO	=ADARK10B-ROOLFOX+LOC-4E2-1.
ADARK12A-ROO-LFO	=ADARK12A-ROOLFOX+LOC-4E2-2.
ADARK12B-ROO-LFO	=ADARK12B-ROOLFOX+LOC-4E2-1.
ADARK2A-ROO-LFO	=ADARK2A-ROOLFOX+LOC-4E2-2+2NB085.
ADARK2B-ROO-LFO	=ADARK2B-ROOLFOX+LOC-4E2-1+2NB050.
ADARK35A-ROO-LFO	=ADARK35A-ROOLFOX+LOC-4E2-2.
ADARK35B-ROO-LFO	=ADARK35B-ROOLFOX+LOC-4E2-1.
ADARK36A-ROO-LFO	=ADARK36A-ROOLFOX+LOC-4E2-2.
ADARK36B-ROO-LFO	=ADARK36B-ROOLFOX+LOC-4E2-1.
ADARK37A-ROO-LFO	=ADARK37A-ROOLFOX+LOC-4E2-2.
ADARK37B-ROO-LFO	=ADARK37B-ROOLFOX+LOC-4E2-1.
ADARK38A-ROO-LFO	=ADARK38A-ROOLFOX+LOC-4E2-2+2NB012.
ADARK38B-ROO-LFO	=ADARK38B-ROOLFOX+LOC-4E2-1+2NB047.
ADARK39A-ROO-LFO	=ADARK39A-ROOLFOX+LOC-4E2-2+2NB013.
ADARK39B-ROO-LFO	=ADARK39B-ROOLFOX+LOC-4E2-1+2NB048.
ADARK3A-ROO-LFO	=ADARK3A-ROOLFOX+LOC-4E2-2+2NB087.
ADARK3B-ROO-LFO	=ADARK3B-ROOLFOX+LOC-4E2-1+2NB051.
ADARK4A-ROO-LFO	=ADARK4A-ROOLFOX+LOC-4E2-2.
ADARK4B-ROO-LFO	=ADARK4B-ROOLFOX+LOC-4E2-1.
ADARK6A-ROO-LFO	=ADARK6A-ROOLFOX+LOC-4E2-2.
ADARK6B-ROO-LFO	=ADARK6B-ROOLFOX+LOC-4E2-1.
ADARK7A-ROO-LFO	=ADARK7A-ROOLFOX+LOC-4E2-2.
ADARK7B-ROO-LFO	=ADARK7B-ROOLFOX+LOC-4E2-1.
ADARK8A-ROO-LFO	=ADARK8A-ROOLFOX+LOC-4E2-2.
ADARK8B-ROO-LFO	=ADARK8B-ROOLFOX+LOC-4E2-1.
ADARK9A-ROO-LFO	=ADARK9A-ROOLFOX+LOC-4E2-2.
ADARK9B-ROO-LFO	=ADARK9B-ROOLFOX+LOC-4E2-1.
ADMS26A-QCO-LFO	=ADMS26A-QCOLFOX+LOC-4C1.
ADMS26B-QCO-LFO	=ADMS26B-QCOLFOX+LOC-4C1.
ADMS31A-QCO-LFO	=ADMS31A-QCOLFOX+LOC-4C1+2NB042.
ADMS31B-QCO-LFO	=ADMS31B-QCOLFOX+LOC-4C1+2NB077.
ADSAC13C-CCC-LF	=ADSAC13C-CCCLFX.
ADSAC13C-TNK-LF	=ADSAC13C-TNKLFX.
ADSAC13D-CCC-LF	=ADSAC13D-CCCLFX.
ADSAC13D-TNK-LF	=ADSAC13D-TNKLFX.
ADSAC13E-CCC-LF	=ADSAC13E-CCCLFX.
ADSAC13E-TNK-LF	=ADSAC13E-TNKLFX.

Table E.4 (Continued)

Component to Location and Associated Cable Transformation

Component	Transformation
ADSAC13R-CCC-LF	=ADSAC13R-CCCLFX.
ADSAC13R-TNK-LF	=ADSAC13R-TNKLFX.
ADSAC13S-CCC-LF	=ADSAC13S-CCCLFX.
ADSAC13S-TNK-LF	=ADSAC13S-TNKLFX.
ADSAC13U-CCC-LF	=ADSAC13U-CCCLFX.
ADSAC13U-TNK-LF	=ADSAC13U-TNKLFX.
ADSAC13V-CCC-LF	=ADSAC13V-CCCLFX.
ADSAC13V-TNK-LF	=ADSAC13V-TNKLFX.
ADSACT-15-UUM	=ADSACT-15UUMX.
ADSACT-16-UUM	=ADSACT-16UUMX.
ADSACT-17-UUM	=ADSACT-17UUMX.
ADSACT-18-UUM	=ADSACT-18UUMX.
ADSACT-IA-TE001	=ADSACT-IATE001X.
ADSACT-IA-TE002	=ADSACT-IATE002X.
ADSACT-IB-TE001	=ADSACT-IBTE001X.
ADSACT-IB-TE002	=ADSACT-IBTE002X.
ADSACT-RE001-A	=ADSACT-RE001AX.
ADSACT-RE001-B	=ADSACT-RE001BX.
ADSACT-RE002-A	=ADSACT-RE002AX.
ADSACT-RE002-B	=ADSACT-RE002BX.
ADSACT-RUM-15	=ADSACT-RUM15X.
ADSACT-RUM-16	=ADSACT-RUM16X.
ADSACT-RUM-17	=ADSACT-RUM17X.
ADSACT-RUM-18	=ADSACT-RUM18X.
ADSACTCB-BCO	=ADSACTCBBCOX+LOC-4E4+2NB064.
ADSB211A-BCO	=ADSB211ABCOX+LOC-4F2+2NB044.
ADSB212B-BCO	=ADSB212BBCOX+LOC-4E4+2NB064.
ADSF13C-RCC-LFP	=ADSF13C-RCCLFPX.
ADSF13CA-CKT-RUM	=ADSF13CA-CKTRUMX.
ADSF13CA-CKT-UUM	=ADSF13CA-CKTUUMX.
ADSF13CA-SCC-LF	=ADSF13CA-SCCLFX+LOC-3J+2NB882+2NB021+2NB035.
ADSF13CB-CKT-RUM	=ADSF13CB-CKTRUMX.
ADSF13CB-CKT-UUM	=ADSF13CB-CKTUUMX.
ADSF13CB-SCC-LF	=ADSF13CB-SCCLFX+LOC-3J+2NB881+2NB056+2NB826+2NB797.
ADSF13D-RCC-LFP	=ADSF13D-RCCLFPX.
ADSF13DA-CKT-RUM	=ADSF13DA-CKTRUMX.
ADSF13DA-CKT-UUM	=ADSF13DA-CKTUUMX.
ADSF13DA-SCC-LF	=ADSF13DA-SCCLFX+LOC-3J+2NB885+2NB023+2NB036.
ADSF13DB-CKT-RUM	=ADSF13DB-CKTRUMX.
ADSF13DB-CKT-UUM	=ADSF13DB-CKTUUMX.
ADSF13DB-SCC-LF	=ADSF13DB-SCCLFX+LOC-3J+2NB884+2NB060+2NB827+2NB798.
ADSF13E-RCC-LFP	=ADSF13E-RCCLFPX.

Table E.4 (Continued)

Component to Location and Associated Cable Transformation

Component	Transformation
ADSF13EA-CKT-RUM	=ADSF13EA-CKTRUMX.
ADSF13EA-CKT-UUM	=ADSF13EA-CKTUUMX.
ADSF13EA-SCC-LF	=ADSF13EA-SCCLFX+LOC-3J+2NB888+2NB025+2NB037.
ADSF13EB-CKT-RUM	=ADSF13EB-CKTRUMX.
ADSF13EB-CKT-UUM	=ADSF13EB-CKTUUMX.
ADSF13EB-SCC-LF	=ADSF13EB-SCCLFX+LOC-3J+2NB887+2NB062+2NB826+2NB799.
ADSF13R-RCC-LFP	=ADSF13R-RCCLFPX.
ADSF13RA-CKT-RUM	=ADSF13RA-CKTRUMX.
ADSF13RA-CKT-UUM	=ADSF13RA-CKTUUMX.
ADSF13RA-SCC-LF	=ADSF13RA-SCCLFX+LOC-3J+2NB891+2NB027+2NB038.
ADSF13RB-CKT-RUM	=ADSF13RB-CKTRUMX.
ADSF13RB-CKT-UUM	=ADSF13RB-CKTUUMX.
ADSF13RB-SCC-LF	=ADSF13RB-SCCLFX+LOC-3J+2NB890+2NB064+2NB827+2NB800.
ADSF13S-RCC-LFP	=ADSF13S-RCCLFPX.
ADSF13SA-CKT-RUM	=ADSF13SA-CKTRUMX.
ADSF13SA-CKT-UUM	=ADSF13SA-CKTUUMX.
ADSF13SA-SCC-LF	=ADSF13SA-SCCLFX+LOC-3J+2NB894+2NB029+2NB039.
ADSF13SB-CKT-RUM	=ADSF13SB-CKTRUMX.
ADSF13SB-CKT-UUM	=ADSF13SB-CKTUUMX.
ADSF13SB-SCC-LF	=ADSF13SB-SCCLFX+LOC-3J+2NB893+2NB070+2NB826+2NB801.
ADSF13U-RCC-LFP	=ADSF13U-RCCLFPX.
ADSF13UA-CKT-RUM	=ADSF13UA-CKTRUMX.
ADSF13UA-CKT-UUM	=ADSF13UA-CKTUUMX.
ADSF13UA-SCC-LF	=ADSF13UA-SCCLFX+LOC-3J+2NB897+2NB031+2NB040.
ADSF13UB-CKT-RUM	=ADSF13UB-CKTRUMX.
ADSF13UB-CKT-UUM	=ADSF13UB-CKTUUMX.
ADSF13UB-SCC-LF	=ADSF13UB-SCCLFX+LOC-3J+2NB896+2NB058+2NB827+2NB802.
ADSF13V-RCC-LFP	=ADSF13V-RCCLFPX.
ADSF13VA-CKT-RUM	=ADSF13VA-CKTRUMX.
ADSF13VA-CKT-UUM	=ADSF13VA-CKTUUMX.
ADSF13VA-SCC-LF	=ADSF13VA-SCCLFX+LOC-3J+2NB900+2NB033+2NB041.
ADSF13VB-CKT-RUM	=ADSF13VB-CKTRUMX.
ADSF13VB-CKT-UUM	=ADSF13VB-CKTUUMX.
ADSF13VB-SCC-LF	=ADSF13VB-SCCLFX+LOC-3J+2NB899+2NB071+2NB826+2NB803.
ADSFU01A-FUS-LF	=ADSFU01A-FUSLFX+LOC-4E2-2.
ADSFU02A-FUS-LF	=ADSFU02A-FUSLFX+LOC-4E2-2.
ADSFU10BX-FUS-LF	=ADSFU10BX-FUSLFX+LOC-4E2-1.
ADSFU11AX-FUS-LF	=ADSFU11AX-FUSLFX+LOC-4E2-2.
ADSFU11BX-FUS-LF	=ADSFU11BX-FUSLFX+LOC-4E2-1.
ADSFU12AX-FUS-LF	=ADSFU12AX-FUSLFX+LOC-4E2-2.
ADSFU12BX-FUS-LF	=ADSFU12BX-FUSLFX+LOC-4E2-1.
ADSFU13BX-FUS-LF	=ADSFU13BX-FUSLFX+LOC-4E2-1.

Table E.4 (Continued)

Component to Location and Associated Cable Transformation

Component	Transformation
ADSFU14BX-FUS-LF	=ADSFU14BX-FUSLFX+LOC-4E2-1.
ADSFU15AX-FUS-LF	=ADSFU15AX-FUSLFX+LOC-4E2-2.
ADSFU15BX-FUS-LF	=ADSFU15BX-FUSLFX+LOC-4E2-1.
ADSFU16AX-FUS-LF	=ADSFU16AX-FUSLFX+LOC-4E2-2.
ADSFU16BX-FUS-LF	=ADSFU16BX-FUSLFX+LOC-4E2-1.
ADSFU19X-FUS-LF	=ADSFU19X-FUSLFX+LOC-4E2-2.
ADSFU1B-FUS-LF	=ADSFU1B-FUSLFX+LOC-4E2-1.
ADSFU20X-FUS-LF	=ADSFU20X-FUSLFX+LOC-4E2-2.
ADSFU23X-FUS-LF	=ADSFU23X-FUSLFX+LOC-4E2-2.
ADSFU24X-FUS-LF	=ADSFU24X-FUSLFX+LOC-4E2-2.
ADSFU27X-FUS-LF	=ADSFU27X-FUSLFX+LOC-4E2-2.
ADSFU28X-FUS-LF	=ADSFU28X-FUSLFX+LOC-4E2-2.
ADSFU2B-FUS-LF	=ADSFU2B-FUSLFX+LOC-4E2-1.
ADSFU3AX-FUS-LF	=ADSFU3AX-FUSLFX+LOC-4E2-2.
ADSFU3BX-FUS-LF	=ADSFU3BX-FUSLFX+LOC-4E2-1.
ADSFU4AX-FUS-LF	=ADSFU4AX-FUSLFX+LOC-4E2-2.
ADSFU4BX-FUS-LF	=ADSFU4BX-FUSLFX+LOC-4E2-1.
ADSFU5BX-FUS-LF	=ADSFU5BX-FUSLFX+LOC-4E2-1.
ADSFU6BX-FUS-LF	=ADSFU6BX-FUSLFX+LOC-4E2-1.
ADSFU7AX-FUS-LF	=ADSFU7AX-FUSLFX+LOC-4E2-2.
ADSFU7BX-FUS-LF	=ADSFU7BX-FUSLFX+LOC-4E2-1.
ADSFU8AX-FUS-LF	=ADSFU8AX-FUSLFX+LOC-4E2-2.
ADSFU8BX-FUS-LF	=ADSFU8BX-FUSLFX+LOC-4E2-1.
ADSFU9BX-FUS-LF	=ADSFU9BX-FUSLFX+LOC-4E2-1.
ADSIN1CB-BCO	=ADSIN1CBBCOX+LOC-4F2+2NB044.
ADSK10ACP1-LFOO	=ADSK10ACP1LFOOX+LOC-4E2-2.
ADSK10BCP1-LFOO	=ADSK10BCP1LFOOX+LOC-4E2-1.
ADSK12ACP1-LFOO	=ADSK12ACP1LFOOX+LOC-4E2-2.
ADSK12BCP1-LFOO	=ADSK12BCP1LFOOX+LOC-4E2-1.
ADSK2ACP3-LFOO	=ADSK2ACP3LFOOX+LOC-4E2-2.
ADSK2BCP3-LFOO	=ADSK2BCP3LFOOX+LOC-4E2-1.
ADSK33ACP3-LFCO	=ADSK33ACP3LFCOX+LOC-4E2-2.
ADSK33BCP3-LFCO	=ADSK33BCP3LFCOX+LOC-4E2-1.
ADSK34ACP3-LFCO	=ADSK34ACP3LFCOX+LOC-4E2-2.
ADSK34BCP3-LFCO	=ADSK34BCP3LFCOX+LOC-4E2-1.
ADSK35ACPM1-LFOO	=ADSK35ACPM1LFOOX+LOC-4E2-2.
ADSK35BCPM1-LFOO	=ADSK35BCPM1LFOOX+LOC-4E2-1.
ADSK36ACPM1-LFOO	=ADSK36ACPM1LFOOX+LOC-4E2-2.
ADSK36BCPM1-LFOO	=ADSK36BCPM1LFOOX+LOC-4E2-1.
ADSK37ACPM1-LFOO	=ADSK37ACPM1LFOOX+LOC-4E2-2.
ADSK37BCPM1-LFOO	=ADSK37BCPM1LFOOX+LOC-4E2-1.
ADSK38ACPM1-LFOO	=ADSK38ACPM1LFOOX+LOC-4E2-2.

Table E.4 (Continued)

Component to Location and Associated Cable Transformation

Component	Transformation
ADSK38ACPM2-LFOO	=ADSK38ACPM2LFOOX+LOC-4E2-2.
ADSK38BCPM1-LFOO	=ADSK38BCPM1LFOOX+LOC-4E2-1.
ADSK38BCPM2-LFOO	=ADSK38BCPM2LFOOX+LOC-4E2-1.
ADSK39ACPM1-LFOO	=ADSK39ACPM1LFOOX+LOC-4E2-2.
ADSK39ACPM2-LFOO	=ADSK39ACPM2LFOOX+LOC-4E2-2.
ADSK39BCPM1-LFOO	=ADSK39BCPM1LFOOX+LOC-4E2-1.
ADSK39BCPM2-LFOO	=ADSK39BCPM2LFOOX+LOC-4E2-1.
ADSK3ACP3-LFOO	=ADSK3ACP3LFOOX+LOC-4E2-2.
ADSK3BCP3-LFOO	=ADSK3BCP3LFOOX+LOC-4E2-1.
ADSK4ACP1-LFOO	=ADSK4ACP1LFOOX+LOC-4E2-2.
ADSK4ACP3-LFOO	=ADSK4ACP3LFOOX+LOC-4E2-2.
ADSK4ACP5-LFOO	=ADSK4ACP5LFOOX+LOC-4E2-2.
ADSK4ACP7-LFOO	=ADSK4ACP7LFOOX+LOC-4E2-2.
ADSK4BCP1-LFOO	=ADSK4BCP1LFOOX+LOC-4E2-1.
ADSK4BCP3-LFOO	=ADSK4BCP3LFOOX+LOC-4E2-1.
ADSK4BCP5-LFOO	=ADSK4BCP5LFOOX+LOC-4E2-1.
ADSK4BCP7-LFOO	=ADSK4BCP7LFOOX+LOC-4E2-1.
ADSK6ACP1-LFOO	=ADSK6ACP1LFOOX+LOC-4E2-2.
ADSK6ACP3-LFOO	=ADSK6ACP3LFOOX+LOC-4E2-2.
ADSK6ACP5-LFOO	=ADSK6ACP5LFOOX+LOC-4E2-2.
ADSK6BCP1-LFOO	=ADSK6BCP1LFOOX+LOC-4E2-1.
ADSK6BCP3-LFOO	=ADSK6BCP3LFOOX+LOC-4E2-1.
ADSK6BCP5-LFOO	=ADSK6BCP5LFOOX+LOC-4E2-1.
ADSK7ACP1-LFOO	=ADSK7ACP1LFOOX+LOC-4E2-2.
ADSK7ACP3-LFOO	=ADSK7ACP3LFOOX+LOC-4E2-2.
ADSK7ACP5-LFOO	=ADSK7ACP5LFOOX+LOC-4E2-2.
ADSK7ACP7-LFOO	=ADSK7ACP7LFOOX+LOC-4E2-2.
ADSK7BCP1-LFOO	=ADSK7BCP1LFOOX+LOC-4E2-1.
ADSK7BCP3-LFOO	=ADSK7BCP3LFOOX+LOC-4E2-1.
ADSK7BCP5-LFOO	=ADSK7BCP5LFOOX+LOC-4E2-1.
ADSK7BCP7-LFOO	=ADSK7BCP7LFOOX+LOC-4E2-1.
ADSK8ACP1-LFOO	=ADSK8ACP1LFOOX+LOC-4E2-2.
ADSK8ACP3-LFOO	=ADSK8ACP3LFOOX+LOC-4E2-2.
ADSK8ACP5-LFOO	=ADSK8ACP5LFOOX+LOC-4E2-2.
ADSK8BCP1-LFOO	=ADSK8BCP1LFOOX+LOC-4E2-1.
ADSK8BCP3-LFOO	=ADSK8BCP3LFOOX+LOC-4E2-1.
ADSK8BCP5-LFOO	=ADSK8BCP5LFOOX+LOC-4E2-1.
ADSK9ACP1-LFOO	=ADSK9ACP1LFOOX+LOC-4E2-2.
ADSK9BCP1-LFOO	=ADSK9BCP1LFOOX+LOC-4E2-1.
ADSMINIT-QOO-OE	=ADSMINIT-QOOOEX+LOC-4C1.
ADSMS32A-QOO-LFO	=ADSMS32A-QOOLFOX+LOC-4C1+2NB042.
ADSMS32B-QOO-LFO	=ADSMS32B-QOOLFOX+LOC-4C1+2NB077.

Table E.4 (Continued)

Component to Location and Associated Cable Transformation

Component	Transformation
ADSMS33A-QOO-LFO	=ADSMS33A-QOOLFOX+LOC-4C1+2NB042.
ADSMS33B-QOO-LFO	=ADSMS33B-QOOLFOX+LOC-4C1+2NB077.
AP037ACP5-LFOC	=AP037ACP5LFOCX+LOC-4F2.
AP037ACP5-LFOO	=AP037ACP5LFOOX+LOC-4F2.
AP037BCP5-LFOC	=AP037BCP5LFOCX+LOC-4F2.
AP037BCP5-LFOO	=AP037BCP5LFOOX+LOC-4F2.
AP037X1CP1-LFOC	=AP037X1CP1LFOCX+LOC-4F2.
AP037X1CP9-LFOC	=AP037X1CP9LFOCX+LOC-4F2.
AP037X2-ROO-LFO	=AP037X2-ROOLFOX+LOC-4F2.
AP037X2CP1-LFOC	=AP037X2CP1LFOCX+LOC-4F2.
AP037X2CP7-LFOC	=AP037X2CP7LFOCX+LOC-4F2.
AP037X2CP7-LFOO	=AP037X2CP7LFOOX+LOC-4F2.
AP037X3-ROO-LFO	=AP037X3-ROOLFOX+LOC-4F2.
AP037X3CP1-LFOO	=AP037X3CP1LFOOX+LOC-4F2.
AP037X3CP7-LFOO	=AP037X3CP7LFOOX+LOC-4F2.
AP037X4CP1-LFCO	=AP037X4CP1LFCOX+LOC-4F2.
AP037X4CP2-LFCO	=AP037X4CP2LFCOX+LOC-4F2.
AP039CP5-LFOC	=AP039CP5LFOCX+LOC-4E4.
AP039CP5-LFOO	=AP039CP5LFOOX+LOC-4E4.
AP039X1CP3-LFOC	=AP039X1CP3LFOCX+LOC-4E4.
AP039X2-ROO-LFO	=AP039X2-ROOLFOX+LOC-4E4.
AP039X2CP4-LFOC	=AP039X2CP4LFOCX+LOC-4E4.
AP039X2CP4-LFOO	=AP039X2CP4LFOOX+LOC-4E4.
AP040ACP5-LFOC	=AP040ACP5LFOCX+LOC-4E4.
AP040ACP5-LFOO	=AP040ACP5LFOOX+LOC-4E4.
AP040BCP5-LFOC	=AP040BCP5LFOCX+LOC-4E4.
AP040BCP5-LFOO	=AP040BCP5LFOOX+LOC-4E4.
AP040X1CP1-LFOC	=AP040X1CP1LFOCX+LOC-4E4.
AP040X1CP9-LFOC	=AP040X1CP9LFOCX+LOC-4E4.
AP040X2-ROO-LFO	=AP040X2-ROOLFOX+LOC-4E4.
AP040X2CP1-LFOC	=AP040X2CP1LFOCX+LOC-4E4.
AP040X2CP7-LFOO	=AP040X2CP7LFOOX+LOC-4E4.
AP040X3-ROO-LFO	=AP040X3-ROOLFOX+LOC-4E4.
AP040X3CP3-LFOO	=AP040X3CP3LFOOX+LOC-4E4.
AP040X3CP7-LFOO	=AP040X3CP7LFOOX+LOC-4E4.
AP040X4CP1-LFCO	=AP040X4CP1LFCOX+LOC-4E4.
AP041ACP3-LFOO	=AP041ACP3LFOOX+LOC-5D2.
AP041BCP3-LFOO	=AP041BCP3LFOOX+LOC-5D2.
AP245ACP3-LFOC	=AP245ACP3LFOCX+LOC-5D2.
AP245ACP3-LFOO	=AP245ACP3LFOOX+LOC-5D2.
AP245BCP3-LFOC	=AP245BCP3LFOCX+LOC-5D2.
AP245BCP3-LFOO	=AP245BCP3LFOOX+LOC-5D2.

Table E.4 (Continued)

Component to Location and Associated Cable Transformation

Component	Transformation
AP251X1CP3-LFOC	=AP251X1CP3LFOCX+LOC-4F2.
AP251X2-ROO-LFO	=AP251X2-ROOLFOX+LOC-4F2.
AP251X2CP4-LFOC	=AP251X2CP4LFOCX+LOC-4F2.
AP251X2CP4-LFOO	=AP251X2CP4LFOOX+LOC-4F2.
AP270X3CP1-LFOC	=AP270X3CP1LFOCX+LOC-4F2.
AP270X3CP1-LFOO	=AP270X3CP1LFOOX+LOC-4F2.
AP270X3CP2-LFOC	=AP270X3CP2LFOCX+LOC-4F2.
AP270X3CP2-LFOO	=AP270X3CP2LFOOX+LOC-4F2.
AP271X3CP1-LFOC	=AP271X3CP1LFOCX+LOC-4E4.
AP271X3CP1-LFOO	=AP271X3CP1LFOOX+LOC-4E4.
AP271X3CP2-LFOC	=AP271X3CP2LFOCX+LOC-4E4.
AP271X3CP2-LFOO	=AP271X3CP2LFOOX+LOC-4E4.
AP272X3CP1-LFOC	=AP272X3CP1LFOCX+LOC-5D2.
AP272X3CP1-LFOO	=AP272X3CP1LFOOX+LOC-5D2.
AP272X3CP2-LFOC	=AP272X3CP2LFOCX+LOC-5D2.
AP272X3CP2-LFOO	=AP272X3CP2LFOOX+LOC-5D2.
AT-TA11-RNB09-1	=AT-TA11-RNB091X.
AT-TB11-RNB09-1	=AT-TB11-RNB091X.
ATW-TA12-TNB04	=ATW-TA12TNB04X.
ATW-TA15-RNB09-1	=ATW-TA15-RNB091X.
ATW-TB12-TNB04	=ATW-TB12TNB04X.
ATW-TB15-RNB09-1	=ATW-TB15-RNB091X.
ATW-TWA8-TNB04	=ATW-TWA8TNB04X.
ATW-TWB8-TNB04	=ATW-TWB8TNB04X.
B135XC5X-BCO-LF	=B135XC5X-BCOLFX+LOC-4F1.
B21A001A-LFR	=B21A001ALFRX+LOC-3J.
B21A001B-LFR	=B21A001BLFRX+LOC-3J.
B21A001C-LFR	=B21A001CLFRX+LOC-3J.
B21A001D-LFR	=B21A001DLFRX+LOC-3J.
B21A002A-LFR	=B21A002ALFRX+LOC-3K.
B21A002B-LFR	=B21A002BLFRX+LOC-3K.
B21A002C-LFR	=B21A002CLFRX+LOC-3K.
B21A002D-LFR	=B21A002DLFRX+LOC-3K.
B235XC5X-BCO-LF	=B235XC5X-BCOLFX+LOC-4F2+2VD053.
BATT-CM	=BATTCMX.
CODG001-XOC-LF	=CODG001-XOCLFX.
CODG002-CCC-LF	=CODG002-CCCLFX.
CODG003-XOC-LF	=CODG003-XOCLFX.
CODG004-XOC-LF	=CODG004-XOCLFX.
CODG005-XOC-LF	=CODG005-XOCLFX.
CODG006-XOC-LF	=CODG006-XOCLFX.
CODG007-XOC-LF	=CODG007-XOCLFX.

Table E.4 (Continued)

Component to Location and Associated Cable Transformation

Component	Transformation
C0DG009-RUM-O	=C0DG009-RUMOX.
C0DG009-V-UUM	=C0DG009-VUUMX.
C0DG009-VCC-CC	=C0DG009-VCCCCX+LOC-7C6+LOC-5C11-10.
C0DG009-VCC-LF	=C0DG009-VCCLFX+LOC-7C6.
C0DG019-XOC-LF	=C0DG019-XOCLFX.
C0DG01F-BF-CC	=C0DG01F-BFCCX+LOC-7C6+LOC-5C11-10.
C0DG01F-PLG-LF	=C0DG01F-PLGLFX.
C0DG01F-RUM-O	=C0DG01F-RUMOX.
C0DG01F-S-UUM	=C0DG01F-SUUMX.
C0DG01P-P-UUM	=C0DG01P-PUUMX.
C0DG01P-PMS-CC	=C0DG01P-PMSCCX+LOC-4F2+LOC-4C1+LOC-7C6+2DG032+2DG031.
C0DG01P-PMS-LF	=C0DG01P-PMSLFX+LOC-7C6.
C0DG020-XOC-LF	=C0DG020-XOCLFX.
C0DG023-XOC-LF	=C0DG023-XOCLFX.
C0DG024-XOC-LF	=C0DG024-XOCLFX.
C0DG027-XOC-LF	=C0DG027-XOCLFX.
C0DG028-XOC-LF	=C0DG028-XOCLFX.
C0DG032-XOC-LF	=C0DG032-XOCLFX.
C0DG035-V-UUM	=C0DG035-VUUMX.
C0DG035-VOC-CC	=C0DG035-VOCCCX+LOC-3H4+LOC-3F-1+LOC-4C1+2DG161+2DG162.
C0DG035-VOC-LF	=C0DG035-VOCLFX+LOC-3H4.
C0DG036-CCC-LF	=C0DG036-CCCLFX.
C2DG01F-BF-CC	=C2DG01F-BFCCX+LOC-6E+LOC-8C4+2DG101+2DG102+2DG100.
C2DG01F-PLG-LF	=C2DG01F-PLGLFX.
C2DG01F-RUM-O	=C2DG01F-RUMOX.
C2DG01F-S-UUM	=C2DG01F-SUUMX.
C2DG01P-P-UUM	=C2DG01P-PUUMX.
C2DG01P-PMS-CC	=C2DG01P-PMSCCX+LOC-4E4+LOC-4C1+LOC-8B2+LOC-3H1+LOC-8C4 +2DG013+2DG014.
C2DG01P-PMS-LF	=C2DG01P-PMSLFX+LOC-8C4.
C2DGF001-XOC-LF	=C2DGF001-XOCLFX.
C2DGF002-CCC-LF	=C2DGF002-CCCLFX.
C2DGF003-XOC-LF	=C2DGF003-XOCLFX.
C2DGF004-XOC-LF	=C2DGF004-XOCLFX.
C2DGF005-XOC-LF	=C2DGF005-XOCLFX.
C2DGF006-XOC-LF	=C2DGF006-XOCLFX.
C2DGF007-XOC-LF	=C2DGF007-XOCLFX.
C2DGF008-XOC-LF	=C2DGF008-XOCLFX.
C2DGF009-XOC-LF	=C2DGF009-XOCLFX.
C2DGF011-RUM-O	=C2DGF011-RUMOX.
C2DGF011-V-UUM	=C2DGF011-VUUMX.
C2DGF011-VCC-CC	=C2DGF011-VCCCCX+LOC-8C4+LOC-6E+2DG103+2DG106.

Table E.4 (Continued)

Component to Location and Associated Cable Transformation

Component	Transformation
C2DGF011-VCC-LF	=C2DGF011-VCCLFX+LOC-8C4.
C2DGF017-XOC-LF	=C2DGF017-XOCLFX.
C34K102B1B2-LFOO	=C34K102B1B2LFOOX+LOC-4E2-1.
C34K624A-CND-LFO	=C34K624A-CNDLFOX+LOC-4E2-1.
C34K624B-CND-LFO	=C34K624B-CNDLFOX+LOC-4E2-1.
C34K624C-CND-LFO	=C34K624C-CNDLFOX+LOC-4E2-1.
C34K625A-CAL-LFO	=C34K625A-CALLFOX+LOC-4E2-1.
C34K625B-CAL-LFO	=C34K625B-CALLFOX+LOC-4E2-1.
C34K625C-CAL-LFO	=C34K625C-CALLFOX+LOC-4E2-1.
C34K627A-CND-LFO	=C34K627A-CNDLFOX+LOC-4E2-1.
C34K627B-CND-LFO	=C34K627B-CNDLFOX+LOC-4E2-1.
C34K627C-CND-LFO	=C34K627C-CNDLFOX+LOC-4E2-1.
C34K653A-CND-LFO	=C34K653A-CNDLFOX+LOC-4E2-1.
C34K653B-CND-LFO	=C34K653B-CNDLFOX+LOC-4E2-1.
C34K653C-CND-LFO	=C34K653C-CNDLFOX+LOC-4E2-1.
C34N004A-OCO-FSL	=C34N004A-OCOFSLX.
C34N004A-OCO-LFO	=C34N004A-OCOLFOX+LOC-3E.
C34N004B-OCO-FSL	=C34N004B-OCOFSLX.
C34N004B-OCO-LFO	=C34N004B-OCOLFOX+LOC-3E.
C34N004C-OCO-FSL	=C34N004C-OCOFSLX.
C34N004C-OCO-LFO	=C34N004C-OCOLFOX+LOC-3E.
C34R601A-Q-OE-O	=C34R601A-Q-OEOX+LOC-4E2-1.
C34R601B-Q-OE-O	=C34R601B-Q-OEOX+LOC-4E2-1.
C34R6021-CAL-LFO	=C34R6021-CALLFOX+LOC-4E2-1.
C34R6022-CAL-LFO	=C34R6022-CALLFOX+LOC-4E2-1.
C34R6023-CND-LFO	=C34R6023-CNDLFOX+LOC-4E2-1.
CBS0008X-XOC-LF	=CBS0008X-XOCLFX.
CBS001AX-COC-LF	=CBS001AX-COCLFX.
CBS001BX-COC-LF	=CBS001BX-COCLFX.
CBS001CX-COC-LF	=CBS001CX-COCLFX.
CBS001DX-CCC-LF	=CBS001DX-CCCLFX.
CBS002AX-XOC-LF	=CBS002AX-XOCLFX.
CBS002BX-XOC-LF	=CBS002BX-XOCLFX.
CBS002CX-XOC-LF	=CBS002CX-XOCLFX.
CBS002DX-XOC-LF	=CBS002DX-XOCLFX.
CBS003AX-XOC-LF	=CBS003AX-XOCLFX.
CBS003BX-XOC-LF	=CBS003BX-XOCLFX.
CBS005AD-VOC-CC	=CBS005AD-VOCCCX+LOC-5B6+LOC-4C1+LOC-5D4+LOC-5E2+2CB012 +2CB017+2CB013+2CB011.
CBS005AD-VOC-LF	=CBS005AD-VOCLFX+LOC-5E2.
CBS005BD-VOC-CC	=CBS005BD-VOCCCX+LOC-5B6+LOC-4C1+LOC-5D4+LOC-5E2+2CB021 +2CB025+2CB020+2CB019.

Table E.4 (Continued)

Component to Location and Associated Cable Transformation

Component	Transformation
CBS005BD-VOC-LF	=CBS005BD-VOCLFX+LOC-5E2.
CBS005CE-VOC-CC	=CBS005CE-VOCCCX+LOC-5D4+LOC-4C1+LOC-5D4+LOC-5E2+2CB029 +2CB033+2CB028+2CB027.
CBS005CE-VOC-LF	=CBS005CE-VOCLFX+LOC-5E2.
CBS006AD-VOC-CC	=CBS006AD-VOCCCX+LOC-5B6+LOC-4C1+LOC-5D4+LOC-5B2+2CB092 +2CB093+2CB016+2CB015.
CBS006AD-VOC-LF	=CBS006AD-VOCLFX+LOC-5B2.
CBS006BD-VOC-CC	=CBS006BD-VOCCCX+LOC-5B6+LOC-4C1+LOC-5D4+LOC-5B2+2CB094 +2CB095+2CB024+2CB023.
CBS006BD-VOC-LF	=CBS006BD-VOCLFX+LOC-5B2.
CBS006CE-VOC-CC	=CBS006CE-VOCCCX+LOC-5D4+LOC-4C1+LOC-5D4+LOC-5B2+2CB096 +2CB097+2CB098+2CB031+2CB032.
CBS006CE-VOC-LF	=CBS006CE-VOCLFX+LOC-5B2.
CBS018DX-N-UUM	=CBS018DX-NUUMX.
CBS018DX-RUM-Y	=CBS018DX-RUMYX.
CBS01AAX-HTX-LFB	=CBS01AAX-HTXLFBX.
CBS01ABX-HTX-LFB	=CBS01ABX-HTXLFBX.
CBS01ACX-HTX-LFB	=CBS01ACX-HTXLFBX.
CBS01PAA-PUM-LF	=CBS01PAA-PUMLFX+LOC-5E2.
CBS01PBB-PUM-LF	=CBS01PBB-PUMLFX+LOC-5E2.
CBS01PCA-PUM-LF	=CBS01PCA-PUMLFX+LOC-5E2.
CBS01PDB-P-UUM	=CBS01PDB-PUUMX.
CBS01PDB-PUM-LF	=CBS01PDB-PUMLFX+LOC-5E2.
CBS01PDB-RUM-X	=CBS01PDB-RUMXX.
CBS02AAX-HTX-LFB	=CBS02AAX-HTXLFBX.
CBS02ABX-HTX-LFB	=CBS02ABX-HTXLFBX.
CBS02ACX-HTX-LFB	=CBS02ACX-HTXLFBX.
CBS03AAX-HTX-LFB	=CBS03AAX-HTXLFBX.
CBS03ABX-HTX-LFB	=CBS03ABX-HTXLFBX.
CBS03ACX-HTX-LFB	=CBS03ACX-HTXLFBX.
CBS04AAX-HTX-LFB	=CBS04AAX-HTXLFBX.
CBS04ABX-HTX-LFB	=CBS04ABX-HTXLFBX.
CBS04ACX-HTX-LFB	=CBS04ACX-HTXLFBX.
CBS05AAX-HTX-LFB	=CBS05AAX-HTXLFBX.
CBS05ABX-HTX-LFB	=CBS05ABX-HTXLFBX.
CBS05ACX-HTX-LFB	=CBS05ACX-HTXLFBX.
CC002SC-000-LFO	=CC002SC-000LFOX+LOC-8B1.
CC01AAX-A00-LFO	=CC01AAX-A00LFOX+LOC-4F2.
CCB0DG1F-B-UUM	=CCB0DG1F-BUUMX.
CCB0DG1F-BCO-LF	=CCB0DG1F-BCOLFX+LOC-5C11-10.
CCB0DG1F-RUM-0	=CCB0DG1F-RUM0X.
CCB0DG1P-B-UUM	=CCB0DG1P-BUUMX.

Table E.4 (Continued)

Component to Location and Associated Cable Transformation

Component	Transformation
CCB0DG1P-BCO-LF	=CCB0DG1P-BCOLFX+LOC-4F2+2DG028.
CCB2DG1P-B-UUM	=CCB2DG1P-BUUMX.
CCB2DG1P-BCO-LF	=CCB2DG1P-BCOLFX+LOC-4E4+2DG012.
CCBC002-B-UUM	=CCBC002-BUUMX.
CCBC002-BCO-LF	=CCBC002-BCOLFX+LOC-5D2+2HP015.
CCBC300A-B-UUM	=CCBC300A-BUUMX.
CCBC300A-BCO-LF	=CCBC300A-BCOLFX+LOC-4F2+2RH186.
CCBC300B-B-UUM	=CCBC300B-BUUMX.
CCBC300B-BCO-LF	=CCBC300B-BCOLFX+LOC-4F2+2RH191.
CCBC300C-B-UUM	=CCBC300C-BUUMX.
CCBC300C-BCO-LF	=CCBC300C-BCOLFX+LOC-4E4+2RH196.
CCBC300D-B-UUM	=CCBC300D-BUUMX.
CCBC300D-BCO-LF	=CCBC300D-BCOLFX+LOC-4E4+2RH201.
CCBD300-B-UUM	=CCBD300-BUUMX.
CCBD300-BCO-LF	=CCBD300-BCOLFX+LOC-6E+2HP070.
CCBD300-RUM-0	=CCBD300-RUM0X.
CCBD300A-B-UUM	=CCBD300A-BUUMX.
CCBD300A-BCO-LF	=CCBD300A-BCOLFX+LOC-5C11-4+2RH334.
CCBD300A-RUM-0	=CCBD300A-RUM0X.
CCBD300B-B-UUM	=CCBD300B-BUUMX.
CCBD300B-BCO-LF	=CCBD300B-BCOLFX+LOC-6E+2RH342.
CCBD300B-RUM-0	=CCBD300B-RUM0X.
CCBDG009-B-UUM	=CCBDG009-BUUMX.
CCBDG009-BCO-LF	=CCBDG009-BCOLFX+LOC-5C11-10.
CCBDG009-RUM-0	=CCBDG009-RUM0X.
CCBF068A-B-UUM	=CCBF068A-BUUMX.
CCBF068A-BCO-LF	=CCBF068A-BCOLFX+LOC-3G-1+2RH072.
CCBF319-B-UUM	=CCBF319-BUUMX.
CCBF319-BCO-LF	=CCBF319-BCOLFX+LOC-6E+2HP073.
CCBF319-RUM-0	=CCBF319-RUM0X.
CCBF336A-B-UUM	=CCBF336A-BUUMX.
CCBF336A-BCO-LF	=CCBF336A-BCOLFX+LOC-5C11-4+2RH340.
CCBF336A-RUM-0	=CCBF336A-RUM0X.
CCBF336B-B-UUM	=CCBF336B-BUUMX.
CCBF336B-BCO-LF	=CCBF336B-BCOLFX+LOC-6E+2RH348.
CCBF336B-RUM-0	=CCBF336B-RUM0X.
CDS0001F-PIP-LFR	=CDS0001F-PIPLFRX.
CDS0004F-PIP-LFR	=CDS0004F-PIPLFRX.
CDS0005F-PIP-LFR	=CDS0005F-PIPLFRX.
CDS0006F-PIP-LFR	=CDS0006F-PIPLFRX.
CDS0007F-PIP-LFR	=CDS0007F-PIPLFRX.
CDS0008F-PIP-LFR	=CDS0008F-PIPLFRX.

Table E.4 (Continued)

Component to Location and Associated Cable Transformation

Component	Transformation
CDS0009F-PIP-LFR	=CDS0009F-PIPLFRX.
CDS0010F-PIP-LFR	=CDS0010F-PIPLFRX.
CDS0011F-PIP-LFR	=CDS0011F-PIPLFRX.
CDS0012F-PIP-LFR	=CDS0012F-PIPLFRX.
CDS0013F-PIP-LFR	=CDS0013F-PIPLFRX.
CDS0014F-PIP-LFR	=CDS0014F-PIPLFRX.
CDS0015X-NCO-LF	=CDS0015X-NCOLFX+LOC-5D4+2CD057.
CDS001AX-XOC-LF	=CDS001AX-XOCLFX.
CDS001BX-XOC-LF	=CDS001BX-XOCLFX.
CDS001CX-XOC-LF	=CDS001CX-XOCLFX.
CDS001DX-XOC-LF	=CDS001DX-XOCLFX.
CDS0022X-XOC-LF	=CDS0022X-XOCLFX.
CDS0023X-NCC-LF	=CDS0023X-NCCLFX+LOC-5D4+2CD059.
CDS0024X-XOC-LF	=CDS0024X-XOCLFX.
CDS002AX-XOC-LF	=CDS002AX-XOCLFX.
CDS002BX-XOC-LF	=CDS002BX-XOCLFX.
CDS002CX-XOC-LF	=CDS002CX-XOCLFX.
CDS002DX-XOC-LF	=CDS002DX-XOCLFX.
CDS003AX-COC-LF	=CDS003AX-COCLFX.
CDS003BX-COC-LF	=CDS003BX-COCLFX.
CDS003CX-COC-LF	=CDS003CX-COCLFX.
CDS003DX-CCC-LF	=CDS003DX-CCCLFX.
CDS0050X-QCO-LFO	=CDS0050X-QCOLFOX+LOC-4C1.
CDS006AX-XOC-LF	=CDS006AX-XOCLFX.
CDS007AX-XOC-LF	=CDS007AX-XOCLFX.
CDS008AX-XOC-LF	=CDS008AX-XOCLFX.
CDS009AX-XOC-LF	=CDS009AX-XOCLFX.
CDS011AX-XOC-LF	=CDS011AX-XOCLFX.
CDS011BX-XOC-LF	=CDS011BX-XOCLFX.
CDS012AX-XOC-LF	=CDS012AX-XOCLFX.
CDS012BX-XOC-LF	=CDS012BX-XOCLFX.
CDS013AX-XOC-LF	=CDS013AX-XOCLFX.
CDS013BX-XOC-LF	=CDS013BX-XOCLFX.
CDS013CX-XOC-LF	=CDS013CX-XOCLFX.
CDS013DX-XOC-LF	=CDS013DX-XOCLFX.
CDS01CAX-HTX-LFB	=CDS01CAX-HTXLFBX.
CDS01DAX-DEM-LFB	=CDS01DAX-DEMLFBX.
CDS01DAX-DEM-LFR	=CDS01DAX-DEMLFRX.
CDS01DBX-DEM-LFB	=CDS01DBX-DEMLFBX.
CDS01DBX-DEM-LFR	=CDS01DBX-DEMLFRX.
CDS01DCX-DEM-LFB	=CDS01DCX-DEMLFBX.
CDS01DCX-DEM-LFR	=CDS01DCX-DEMLFRX.

Table E.4 (Continued)

Component to Location and Associated Cable Transformation

Component	Transformation
CDS01DDX-DEM-LFB	=CDS01DDX-DEMLFBX.
CDS01DDX-DEM-LFR	=CDS01DDX-DEMLFRX.
CDS01DEX-DEM-LFB	=CDS01DEX-DEMLFBX.
CDS01DEX-DEM-LFR	=CDS01DEX-DEMLFRX.
CDS01DFX-DEM-LFB	=CDS01DFX-DEMLFBX.
CDS01DFX-DEM-LFR	=CDS01DFX-DEMLFRX.
CDS01PAA-PUM-LF	=CDS01PAA-PUMLFX+LOC-5E2.
CDS01PBB-PUM-LF	=CDS01PBB-PUMLFX+LOC-5E2.
CDS01PCA-PUM-LF	=CDS01PCA-PUMLFX+LOC-5E2.
CDS01PDB-P-UUM	=CDS01PDB-PUUMX.
CDS01PDB-PUM-LF	=CDS01PDB-PUMLFX+LOC-5E2.
CDS01PDB-RUM-X	=CDS01PDB-RUMXX.
CDS01SAX-HTX-LFB	=CDS01SAX-HTXLFBX.
CDS035AD-VOC-CC	=CDS035AD-VOCCCX+LOC-6D+LOC-5C11+2CD112+2CD110.
CDS035AD-VOC-LF	=CDS035AD-VOCLFX+LOC-5C11.
CDS035BD-VOC-CC	=CDS035BD-VOCCCX+LOC-6D+LOC-5C11+2CD115+2CD113.
CDS035BD-VOC-LF	=CDS035BD-VOCLFX+LOC-5C11.
CDS035CD-VOC-CC	=CDS035CD-VOCCCX+LOC-6D+LOC-5C11+2CD118+2CD116.
CDS035CD-VOC-LF	=CDS035CD-VOCLFX+LOC-5C11.
CDS035DE-VOC-CC	=CDS035DE-VOCCCX+LOC-5C11+LOC-6D+2CD120+2CD122.
CDS035DE-VOC-LF	=CDS035DE-VOCLFX+LOC-5C11.
CDS035EE-VOC-CC	=CDS035EE-VOCCCX+LOC-5C11+LOC-6D+2CD123+2CD125.
CDS035EE-VOC-LF	=CDS035EE-VOCLFX+LOC-5C11.
CDS035FE-VOC-CC	=CDS035FE-VOCCCX+LOC-5C11+LOC-6D+2CD126+2CD128.
CDS035FE-VOC-LF	=CDS035FE-VOCLFX+LOC-5C11.
CDS036AD-VOC-CC	=CDS036AD-VOCCCX+LOC-6D+LOC-5C11+2CD133+2CD135.
CDS036AD-VOC-LF	=CDS036AD-VOCLFX+LOC-5C11.
CDS036BD-VOC-CC	=CDS036BD-VOCCCX+LOC-6D+LOC-5C11+2CD136+2CD138.
CDS036BD-VOC-LF	=CDS036BD-VOCLFX+LOC-5C11.
CDS036CD-VOC-CC	=CDS036CD-VOCCCX+LOC-6D+LOC-5C11+2CD140+2CD142.
CDS036CD-VOC-LF	=CDS036CD-VOCLFX+LOC-5C11.
CDS036DE-VOC-CC	=CDS036DE-VOCCCX+LOC-5C11+LOC-6D+2CD143+2CD145.
CDS036DE-VOC-LF	=CDS036DE-VOCLFX+LOC-5C11.
CDS036EE-VOC-CC	=CDS036EE-VOCCCX+LOC-5C11+LOC-6D+2CD146+2CD148.
CDS036EE-VOC-LF	=CDS036EE-VOCLFX+LOC-5C11.
CDS036FE-VOC-CC	=CDS036FE-VOCCCX+LOC-5C11+LOC-6D+2CD149+2CD151.
CDS036FE-VOC-LF	=CDS036FE-VOCLFX+LOC-5C11.
CDSAH3AX-FIL-LFB	=CDSAH3AX-FILLFBX.
CDSAH3AX-FIL-LFR	=CDSAH3AX-FILLFRX.
CDSAH3BX-FIL-LFB	=CDSAH3BX-FILLFBX.
CDSAH3BX-FIL-LFR	=CDSAH3BX-FILLFRX.
CDSAH3CX-FIL-LFB	=CDSAH3CX-FILLFBX.

Table E.4 (Continued)

Component to Location and Associated Cable Transformation

Component	Transformation
CDSAH3CX-FIL-LFR	=CDSAH3CX-FILLFRX.
CDSAH3DX-FIL-LFB	=CDSAH3DX-FILLFBX.
CDSAH3DX-FIL-LFR	=CDSAH3DX-FILLFRX.
CDSAH3EX-FIL-LFB	=CDSAH3EX-FILLFBX.
CDSAH3EX-FIL-LFR	=CDSAH3EX-FILLFRX.
CDSAH3FX-FIL-LFB	=CDSAH3FX-FILLFBX.
CDSAH3FX-FIL-LFR	=CDSAH3FX-FILLFRX.
CDSB01PA-BCO-CC	=CDSB01PA-BCOCCX+LOC-4F2+LOC-4C1+LOC-5D4+2CD011+2CD012.
CDSB01PA-BCO-LF	=CDSB01PA-BCOLFX+LOC-4F2+2CD010.
CDSB01PB-BCO-CC	=CDSB01PB-BCOCCX+LOC-4E4+LOC-4C1+LOC-5D4+2CD020+2CD019.
CDSB01PB-BCO-LF	=CDSB01PB-BCOLFX+LOC-4E4+2CD018.
CDSB01PC-BCO-CC	=CDSB01PC-BCOCCX+LOC-4F2+LOC-4C1+LOC-5D4+2CD027+2CD028.
CDSB01PC-BCO-LF	=CDSB01PC-BCOLFX+LOC-4F2+2CD026.
CDSB01PD-B-UUM	=CDSB01PD-BUUMX.
CDSB01PD-BOO-CC	=CDSB01PD-BOOCCX+LOC-4E4+LOC-4C1+LOC-5D4+2CD035+2CD036.
CDSB01PD-BOO-LF	=CDSB01PD-BOOLFX+LOC-4E4+2CD034.
CDSB02AX-HTX-LFB	=CDSB02AX-HTXLFBX.
CDSB02BX-H-UUM	=CDSB02BX-HUUMX.
CDSB02BX-HTX-LFB	=CDSB02BX-HTXLFBX.
CDSB02BX-RUM-X	=CDSB02BX-RUMXX.
CDSB02BX-RUM-Y	=CDSB02BX-RUMYX.
CDSBNPSH-BCO	=CDSBNPSHBCOX+LOC-5D4+2CD055.
CDSF004X-FUS-LF	=CDSF004X-FUSLFX+LOC-4E4.
CDSFNPSH-FUS-LF	=CDSFNPSH-FUSLFX+LOC-5D4.
CDSM1PAA-MOT-LF	=CDSM1PAA-MOTLFX+LOC-5E2.
CDSM1PAA-SSC-LF	=CDSM1PAA-SSCLFX+LOC-5E2.
CDSM1PBB-MOT-LF	=CDSM1PBB-MOTLFX+LOC-5E2.
CDSM1PBB-SSC-LF	=CDSM1PBB-SSCLFX+LOC-5E2.
CDSM1PCA-MOT-LF	=CDSM1PCA-MOTLFX+LOC-5E2.
CDSM1PCA-SSC-LF	=CDSM1PCA-SSCLFX+LOC-5E2.
CDSM1PDB-M-UUM	=CDSM1PDB-MUUMX.
CDSM1PDB-MOT-LF	=CDSM1PDB-MOTLFX+LOC-5E2.
CDSM1PDB-SSC-LF	=CDSM1PDB-SSCLFX+LOC-5E2.
CIK66X20-LFO	=CIK66X20LFOX+LOC-4E2-1+2PC139.
CIK66X20K35-LFCO	=CIK66X20K35LFCOX+LOC-4E2-1.
CIK67X20-LFO	=CIK67X20LFOX+LOC-4E2-2+2PC135.
CIS-1A06-LIPC1-A	=CIS-1A06-LIPC1AX.
CIS-1A06-TLIPC1	=CIS-1A06TLIPC1X.
CIS-1A07-LIPC1-A	=CIS-1A07-LIPC1AX.
CIS-1A07-TLIPC1	=CIS-1A07TLIPC1X.
CIS-1B06-LIPC1-A	=CIS-1B06-LIPC1AX.
CIS-1B06-TLIPC1	=CIS-1B06TLIPC1X.

Table E.4 (Continued)

Component to Location and Associated Cable Transformation

Component	Transformation
CIS-1B07-LIPC1-A	=CIS-1B07-LIPC1AX.
CIS-1B07-TLIPC1	=CIS-1B07TLIPC1X.
CIS4K4AA-R-TTPR5	=CIS4K4AA-RTTPR5X.
CISAF11A-FUS-LF	=CISAF11A-FUSLFX+LOC-4C1.
CISAF1AA-FUS-LF	=CISAF1AA-FUSLFX+LOC-4C1.
CISAF3AA-FUS-LF	=CISAF3AA-FUSLFX+LOC-4C1.
CISAF4A-FUS-LF	=CISAF4A-FUSLFX+LOC-4C1.
CISAF60A-FUS-LF	=CISAF60A-FUSLFX+LOC-4C1.
CISAF63A-FUS-LF	=CISAF63A-FUSLFX+LOC-4C1.
CISAF6AA-FUS-LF	=CISAF6AA-FUSLFX+LOC-4C1.
CISAK10A-LFO	=CISAK10ALFOX+LOC-4C1.
CISAK10A-R-TTPR3	=CISAK10A-RTTPR3X.
CISAK10AK7A-LFCO	=CISAK10AK7ALFCOX+LOC-4C1.
CISAK1AA-LFO	=CISAK1AALFOX+LOC-4C1+2PC020+2PC130.
CISAK1AAK7A-LFCO	=CISAK1AAK7ALFCOX+LOC-4C1.
CISAK35A-LFO	=CISAK35ALFOX+LOC-4C1+2PC122.
CISAK35AK7A-LFCO	=CISAK35AK7ALFCOX+LOC-4C1.
CISAK3AA-LFO	=CISAK3AALFOX+LOC-4C1+2PC010.
CISAK3AA-R-TTPR4	=CISAK3AA-RTTPR4X.
CISAK3AAK7A-LFCO	=CISAK3AAK7ALFCOX+LOC-4C1.
CISAK4AA-LFO	=CISAK4AALFOX+LOC-4C1+2PC024.
CISAK4AAK7A-LFCO	=CISAK4AAK7ALFCOX+LOC-4C1.
CISAK7AA-LFO	=CISAK7AALFOX+LOC-4C1+2PC016.
CISAK7AAK7A-LFCO	=CISAK7AAK7ALFCOX+LOC-4C1.
CISAK7AMSIV-LFCO	=CISAK7AMSIVLFCOX+LOC-4C1.
CISAK8AA-LFO	=CISAK8AALFOX+LOC-4C1.
CISAK8AA-R-TTPR2	=CISAK8AA-RTTPR2X.
CISAK8AAK7A-LFCO	=CISAK8AAK7ALFCOX+LOC-4C1.
CISATIKI-BCO	=CISATIKIBCOX+LOC-4E4+2PC138.
CISB30AA-BCO	=CISB30AABCOX+LOC-3F-1+2IN024.
CISB30AB-BCO	=CISB30ABBCOX+LOC-4E4+2IN020.
CISBAQK1-BCO	=CISBAQK1BCOX+LOC-4F2+2PC134.
CISBF11B-FUS-LF	=CISBF11B-FUSLFX+LOC-4C1.
CISBF1BB-FUS-LF	=CISBF1BB-FUSLFX+LOC-4C1.
CISBF3BB-FUS-LF	=CISBF3BB-FUSLFX+LOC-4C1.
CISBF4B-FUS-LF	=CISBF4B-FUSLFX+LOC-4C1.
CISBF60B-FUS-LF	=CISBF60B-FUSLFX+LOC-4C1.
CISBF63B-FUS-LF	=CISBF63B-FUSLFX+LOC-4C1.
CISBF6BB-FUS-LF	=CISBF6BB-FUSLFX+LOC-4C1.
CISBK10B-LFO	=CISBK10BLFOX+LOC-4C1.
CISBK10B-R-TTPR3	=CISBK10B-RTTPR3X.
CISBK10BK7B-LFCO	=CISBK10BK7BLFCOX+LOC-4C1.

Table E.4 (Continued)

Component to Location and Associated Cable Transformation

Component	Transformation
CISBK1BB-LFO	=CISBK1BBLFOX+LOC-4C1+2PC132+2PC022.
CISBK1BBK7B-LFCO	=CISBK1BBK7BLFCOX+LOC-4C1.
CISBK35B-LFO	=CISBK35BLFOX+LOC-4C1+2PC142.
CISBK35BCP9-LFCO	=CISBK35BCP9LFCOX+LOC-4C1.
CISBK35BK7B-LFCO	=CISBK35BK7BLFCOX+LOC-4C1.
CISBK3BB-LFO	=CISBK3BBLFOX+LOC-4C1+2PC013.
CISBK3BB-R-TTPR4	=CISBK3BB-RTTPR4X.
CISBK3BBK7B-LFCO	=CISBK3BBK7BLFCOX+LOC-4C1.
CISBK4BB-LFO	=CISBK4BBLFOX+LOC-4C1+2PC026.
CISBK4BB-R-TTPR5	=CISBK4BB-RTTPR5X.
CISBK4BBK7B-LFCO	=CISBK4BBK7BLFCOX+LOC-4C1.
CISBK7BB-LFO	=CISBK7BBLFOX+LOC-4C1+2PC018.
CISBK7BBK7B-LFCO	=CISBK7BBK7BLFCOX+LOC-4C1.
CISBK7BMSIV-LFCO	=CISBK7BMSIVLFCOX+LOC-4C1.
CISBK8BB-LFO	=CISBK8BBLFOX+LOC-4C1.
CISBK8BB-R-TTPR2	=CISBK8BB-RTTPR2X.
CISBK8BBK7B-LFCO	=CISBK8BBK7BLFCOX+LOC-4C1.
CISCF11C-FUS-LF	=CISCF11C-FUSLFX+LOC-4C1.
CISCF1CA-FUS-LF	=CISCF1CA-FUSLFX+LOC-4C1.
CISCF3CA-FUS-LF	=CISCF3CA-FUSLFX+LOC-4C1.
CISCF4CA-FUS-LF	=CISCF4CA-FUSLFX+LOC-4C1.
CISCF60C-FUS-LF	=CISCF60C-FUSLFX+LOC-4C1.
CISCF63C-FUS-LF	=CISCF63C-FUSLFX+LOC-4C1.
CISCF6CA-FUS-LF	=CISCF6CA-FUSLFX+LOC-4C1.
CISCK10C-LFO	=CISCK10CLFOX+LOC-4C1.
CISCK10C-R-TTPR3	=CISCK10C-RTTPR3X.
CISCK10CK7C-LFCO	=CISCK10CK7CLFCOX+LOC-4C1.
CISCK1CA-LFO	=CISCK1CALFOX+LOC-4C1+2PC021+2PC131.
CISCK1CAK7C-LFCO	=CISCK1CAK7CLFCOX+LOC-4C1.
CISCK35C-LFO	=CISCK35CLFOX+LOC-4C1+2PC123.
CISCK35CK7C-LFCO	=CISCK35CK7CLFCOX+LOC-4C1.
CISCK3CA-LFO	=CISCK3CALFOX+LOC-4C1+2PC012.
CISCK3CA-R-TTPR4	=CISCK3CA-RTTPR4X.
CISCK3CAK7C-LFCO	=CISCK3CAK7CLFCOX+LOC-4C1.
CISCK4CA-LFO	=CISCK4CALFOX+LOC-4C1+2PC025.
CISCK4CA-R-TTPR5	=CISCK4CA-RTTPR5X.
CISCK4CAK7C-LFCO	=CISCK4CAK7CLFCOX+LOC-4C1.
CISCK66B-RCO-LFO	=CISCK66B-RCOLFOX+LOC-4E2-1+2PC083+2PC084.
CISCK79A-RCO-LFO	=CISCK79A-RCOLFOX+LOC-4E2-2+2PC086+2PC087.
CISCK7CA-LFO	=CISCK7CALFOX+LOC-4C1+2PC017.
CISCK7CAK7C-LFCO	=CISCK7CAK7CLFCOX+LOC-4C1.
CISCK7CMSIV-LFCO	=CISCK7CMSIVLFCOX+LOC-4C1.

Table E.4 (Continued)

Component to Location and Associated Cable Transformation

Component	Transformation
CISCK8CA-LFO	=CISCK8CALFOX+LOC-4C1.
CISCK8CA-R-TTPR2	=CISCK8CA-RTTPR2X.
CISCK8CAK7C-LFCO	=CISCK8CAK7CLFCOX+LOC-4C1.
CISCS25A-QCO-LFO	=CISCS25A-QCOLFOX+LOC-4C1.
CISCS25B-QCO-LFO	=CISCS25B-QCOLFOX+LOC-4C1.
CISCS25C-QCO-LFO	=CISCS25C-QCOLFOX+LOC-4C1.
CISCS25D-QCO-LFO	=CISCS25D-QCOLFOX+LOC-4C1.
CISCT066X7B-LFCO	=CISCT066X7BLFCOX+LOC-4E2-1+LOC-4C1.
CISCT10K1AA-LFCO	=CISCT10K1AALFCOX+LOC-4C1.
CISCT10K1BA-LFCO	=CISCT10K1BALFCOX+LOC-4C1.
CISCT10K1CB-LFCO	=CISCT10K1CBLFCOX+LOC-4C1.
CISCT10K1DB-LFCO	=CISCT10K1DBLFCOX+LOC-4C1.
CISCT10K4AA-LFCO	=CISCT10K4AALFCOX+LOC-4C1.
CISCT10K4BA-LFCO	=CISCT10K4BALFCOX+LOC-4C1.
CISCT10K4CB-LFCO	=CISCT10K4CBLFCOX+LOC-4C1.
CISCT10K4DB-LFCO	=CISCT10K4DBLFCOX+LOC-4C1.
CISCT1S80BA-LFCO	=CISCT1S80BALFCOX+LOC-4C1.
CISCT1S80DB-LFCO	=CISCT1S80DBLFCOX+LOC-4C1.
CISCT20K66B-LFCO	=CISCT20K66BLFCOX+LOC-4E2-1.
CISCT20K79A-LFCO	=CISCT20K79ALFCOX+LOC-4E2-2.
CISCT2S80AA-LFCO	=CISCT2S80AALFCOX+LOC-4C1.
CISCT2S80CB-LFCO	=CISCT2S80CBLFCOX+LOC-4C1.
CISCTA0K66B-LFCO	=CISCTA0K66BLFCOX+LOC-4E2-1.
CISCTA0K67A-LFCO	=CISCTA0K67ALFCOX+LOC-4E2-2.
CISCTA66X1B-LFCO	=CISCTA66X1BLFCOX+LOC-4E2-1.
CISCTA66X7B-LFCO	=CISCTA66X7BLFCOX+LOC-4E2-1+LOC-4C1.
CISCTA67X1A-LFCO	=CISCTA67X1ALFCOX+LOC-4E2-2.
CISCTA67X8A-LFCO	=CISCTA67X8ALFCOX+LOC-4E2-2.
CISCTAK35BA-LFCO	=CISCTAK35BALFCOX+LOC-4C1.
CISCTAK35DB-LFCO	=CISCTAK35DBLFCOX+LOC-4C1.
CISDF11D-FUS-LF	=CISDF11D-FUSLFX+LOC-4C1.
CISDF1DB-FUS-LF	=CISDF1DB-FUSLFX+LOC-4C1.
CISDF3DB-FUS-LF	=CISDF3DB-FUSLFX+LOC-4C1.
CISDF4D-FUS-LF	=CISDF4D-FUSLFX+LOC-4C1.
CISDF60D-FUS-LF	=CISDF60D-FUSLFX+LOC-4C1.
CISDF63D-FUS-LF	=CISDF63D-FUSLFX+LOC-4C1.
CISDF6DB-FUS-LF	=CISDF6DB-FUSLFX+LOC-4C1.
CISDK10D-LFO	=CISDK10DLFOX+LOC-4C1.
CISDK10D-R-TTPR3	=CISDK10D-RTTPR3X.
CISDK10DK7D-LFCO	=CISDK10DK7DLFCOX+LOC-4C1.
CISDK1DB-LFO	=CISDK1DBLFOX+LOC-4C1+2PC023+2PC133.
CISDK1DBK7D-LFCO	=CISDK1DBK7DLFCOX+LOC-4C1.

Table E.4 (Continued)

Component to Location and Associated Cable Transformation

Component	Transformation
CISDK35D-LFO	=CISDK35DLFOX+LOC-4C1+2PC143.
CISDK35DCP9-LFCO	=CISDK35DCP9LFCOX+LOC-4C1.
CISDK35DK7D-LFCO	=CISDK35DK7DLFCOX+LOC-4C1.
CISDK3DB-LFO	=CISDK3DBLFOX+LOC-4C1+2PC015.
CISDK3DB-R-TTPR4	=CISDK3DB-RTTPR4X.
CISDK3DBK7D-LFCO	=CISDK3DBK7DLFCOX+LOC-4C1.
CISDK4DB-LFO	=CISDK4DBLFOX+LOC-4C1+2PC027.
CISDK4DB-R-TTPR5	=CISDK4DB-RTTPR5X.
CISDK4DBK7D-LFCO	=CISDK4DBK7DLFCOX+LOC-4C1.
CISDK7DB-LFO	=CISDK7DBLFOX+LOC-4C1+2PC019.
CISDK7DBK7D-LFCO	=CISDK7DBK7DLFCOX+LOC-4C1.
CISDK7DMSIV-LFCO	=CISDK7DMSIVLFCOX+LOC-4C1.
CISDK8DB-LFO	=CISDK8DBLFOX+LOC-4C1.
CISDK8DB-R-TTPR2	=CISDK8DB-RTTPR2X.
CISDK8DBK7D-LFCO	=CISDK8DBK7DLFCOX+LOC-4C1.
CISF10AB-FUS-LF	=CISF10AB-FUSLFX+LOC-4E2-1.
CISFS13B-FUS-LF	=CISFS13B-FUSLFX+LOC-4C1.
CISFS15B-FUS-LF	=CISFS15B-FUSLFX+LOC-4C1.
CISFS1AA-FUS-LF	=CISFS1AA-FUSLFX+LOC-4E2-2.
CISFS1BB-FUS-LF	=CISFS1BB-FUSLFX+LOC-4E2-1.
CISFS35A-FUS-LF	=CISFS35A-FUSLFX+LOC-4C1.
CISFS36B-FUS-LF	=CISFS36B-FUSLFX+LOC-4E2-1.
CISFS37A-FUS-LF	=CISFS37A-FUSLFX+LOC-4E2-2.
CISFS4AA-FUS-LF	=CISFS4AA-FUSLFX+LOC-4C1.
CISFS4BB-FUS-LF	=CISFS4BB-FUSLFX+LOC-4C1.
CISFS4CA-FUS-LF	=CISFS4CA-FUSLFX+LOC-4C1.
CISFS4DB-FUS-LF	=CISFS4DB-FUSLFX+LOC-4C1.
CISFSF4A-FUS-LF	=CISFSF4A-FUSLFX+LOC-4E2-2.
CISFSF4B-FUS-LF	=CISFSF4B-FUSLFX+LOC-4E2-1.
CISFSF7A-FUS-LF	=CISFSF7A-FUSLFX+LOC-4E2-2.
CISFU3A-FUS-LF	=CISFU3A-FUSLFX+LOC-4E2-2.
CISFU3B-FUS-LF	=CISFU3B-FUSLFX+LOC-4E2-1.
CISN02AA-OCO-FSL	=CISN02AA-OCOFSLX.
CISN02AA-OCO-LFO	=CISN02AA-OCOLFOX+LOC-3E+2RP054.
CISN02BB-OCO-FSL	=CISN02BB-OCOFSLX.
CISN02BB-OCO-LFO	=CISN02BB-OCOLFOX+LOC-3E+2RP058.
CISN02CA-OCO-FSL	=CISN02CA-OCOFSLX.
CISN02CA-OCO-LFO	=CISN02CA-OCOLFOX+LOC-3E+2RP062.
CISN02DB-OCO-FSL	=CISN02DB-OCOFSLX.
CISN02DB-OCO-LFO	=CISN02DB-OCOLFOX+LOC-3E+2RP066.
CISREL001AB-LFO	=CISREL001ABLFOX+LOC-3E+2IN023+2IN021.
CISREL001BA-LFO	=CISREL001BALFOX+LOC-3E+2IN022+2IN027.

Table E.4 (Continued)

Component to Location and Associated Cable Transformation

Component	Transformation
CISRELOK4AA-LFO	=CISRELOK4AALFOX+LOC-4C1.
CISRELOK4BB-LFO	=CISRELOK4BBLFOX+LOC-4C1.
CISRELOK4CA-LFO	=CISRELOK4CALFOX+LOC-4C1.
CISRELOK4DB-LFO	=CISRELOK4DBLFOX+LOC-4C1.
CISRELOK67A-LFO	=CISRELOK67ALFOX+LOC-4C1+2PC086+2PC087.
CISREL66X1B-LFO	=CISREL66X1BLFOX+LOC-4E2-1+2PC040+2PC041.
CISREL66X7B-LFO	=CISREL66X7BLFOX+LOC-4E2-1+2PC040+2PC041.
CISREL67X1A-LFO	=CISREL67X1ALFOX+LOC-4E2-2+2PC032+2PC033.
CISREL67X8A-LFO	=CISREL67X8ALFOX+LOC-4E2-2+2PC032+2PC033.
CISRELN017B-LFO	=CISRELN017BLFOX+LOC-3E+2IN039+2IN021.
CISRLAOK66B-LFO	=CISRLAOK66BLFOX+LOC-4E2-1+2PC083+2PC084.
CK67X20K35B-LFCO	=CK67X20K35BLFCOX+LOC-4E2-2.
CLA0001F-PIP-LFR	=CLA0001F-PIPLFRX.
CLA001AA-HTX-LFB	=CLA001AA-HTXLFBX.
CLA001AA-HTX-LFI	=CLA001AA-HTXLFIX.
CLA003TA-TNK-LF	=CLA003TA-TNKLFX.
CLA03PDD-M-UUM	=CLA03PDD-MUUMX.
CLA03PDD-PMS-CC	=CLA03PDD-PMSCCX+LOC-5E2+LOC-4C1+2CD158+2CD159.
CLA03PDD-PMS-LF	=CLA03PDD-PMSLFX+LOC-5E2.
CLA115AX-COC-LF	=CLA115AX-COCLFX.
CLA115BX-COC-LF	=CLA115BX-COCLFX.
CLA115CX-COC-LF	=CLA115CX-COCLFX.
CLA115DX-COC-LF	=CLA115DX-COCLFX.
CLA116AX-COC-LF	=CLA116AX-COCLFX.
CLA116BX-COC-LF	=CLA116BX-COCLFX.
CLA116CX-COC-LF	=CLA116CX-COCLFX.
CLA116DX-COC-LF	=CLA116DX-COCLFX.
CLACV1AX-COC-LF	=CLACV1AX-COCLFX.
CLACV2DX-COC-LF	=CLACV2DX-COCLFX.
CLB0001F-PIP-LFR	=CLB0001F-PIPLFRX.
CLB001AB-HTX-LFB	=CLB001AB-HTXLFBX.
CLB001AB-HTX-LFI	=CLB001AB-HTXLFIX.
CLB003TB-TNK-LF	=CLB003TB-TNKLFX.
CLBCV1BX-COC-LF	=CLBCV1BX-COCLFX.
CLC0001F-PIP-LFR	=CLC0001F-PIPLFRX.
CLC001AC-HTX-LFB	=CLC001AC-HTXLFBX.
CLC001AC-HTX-LFI	=CLC001AC-HTXLFIX.
CLC003TC-TNK-LF	=CLC003TC-TNKLFX.
CLCCV1CX-COC-LF	=CLCCV1CX-COCLFX.
CLD0001F-PIP-LFR	=CLD0001F-PIPLFRX.
CLD001AD-H-UUM	=CLD001AD-HUUMX.
CLD001AD-HTX-LFB	=CLD001AD-HTXLFBX.

Table E.4 (Continued)

Component to Location and Associated Cable Transformation

Component	Transformation
CLD001AD-HTX-LFI	=CLD001AD-HTXLFIX.
CLD003TD-TNK-LF	=CLD003TD-TNKLFX.
CLDCV1DX-COC-LF	=CLDCV1DX-COCLFX.
CRD-REALIGN-OE	=CRD-REALIGNOEX+LOC-3E+LOC-3I2+LOC-5E2.
CRDFUF1X-FUS-LF	=CRDFUF1X-FUSLFX+LOC-4C1.
CRDPS01-PIP-LFR	=CRDPS01-PIPLFRX.
CSC02K18-ROO-LFO	=CSC02K18-ROOLFOX+LOC-8B1.
CSC02K18CP5-LFOO	=CSC02K18CP5LFOOX+LOC-8B1.
CSCB068X-B-UUM	=CSCB068X-BUUMX.
CSCB068X-BCO-LF	=CSCB068X-BCOLFX+LOC-3G-1+2RH076.
CSCBF11-B-UUM	=CSCBF11-BUUMX.
CSCBF11-RUM-0	=CSCBF11-RUM0X.
CSCC002-P-UUM	=CSCC002-PUUMX.
CSCC002-PMS-CC	=CSCC002-PMSCCX+LOC-5D2+LOC-4C1+LOC-8B1+2HP017+2HP016 +2HP067.
CSCC002-PMS-LF	=CSCC002-PMSLFX+LOC-8C3.
CSCC300A-P-UUM	=CSCC300A-PUUMX.
CSCC300A-PMS-CC	=CSCC300A-PMSCCX+LOC-4F2+LOC-4C1+2RH190.
CSCC300A-PMS-LF	=CSCC300A-PMSLFX+LOC-8C5.
CSCC300B-P-UUM	=CSCC300B-PUUMX.
CSCC300B-PMS-CC	=CSCC300B-PMSCCX+LOC-4F2+LOC-4C1+2RH195.
CSCC300B-PMS-LF	=CSCC300B-PMSLFX+LOC-8C5.
CSCC300C-P-UUM	=CSCC300C-PUUMX.
CSCC300C-PMS-CC	=CSCC300C-PMSCCX+LOC-4E4+LOC-4E2-1+LOC-4C1+2RH200+2RH654 +2RH415+2RH649+2RH445.
CSCC300C-PMS-LF	=CSCC300C-PMSLFX+LOC-8C4.
CSCC300D-P-UUM	=CSCC300D-PUUMX.
CSCC300D-PMS-CC	=CSCC300D-PMSCCX+LOC-4E4+LOC-4E2-1+LOC-4C1+2RH205+2RH655 +2RH379+2RH656+2RH446.
CSCC300D-PMS-LF	=CSCC300D-PMSLFX+LOC-8C4.
CSCCBDGF-B-UUM	=CSCCBDGF-BUUMX.
CSCCBDGF-BCO-LF	=CSCCBDGF-BCOLFX+LOC-6E+2DG107.
CSCCBDGF-RUM-0	=CSCCBDGF-RUM0X.
CSCCBF11-BCO-LF	=CSCCBF11-BCOLFX+LOC-6E+2DG105.
CSCD300-BF-CC	=CSCD300-BFCCX+LOC-6E+LOC-8C3+2HP071.
CSCD300-PLG-LF	=CSCD300-PLGLFX.
CSCD300-RUM-0	=CSCD300-RUM0X.
CSCD300-S-UUM	=CSCD300-SUUMX.
CSCD300A-BF-CC	=CSCD300A-BFCCX+LOC-8C5+LOC-5C11-4+2RH335+2RH336+2RH339.
CSCD300A-PLG-LF	=CSCD300A-PLGLFX.
CSCD300A-RUM-0	=CSCD300A-RUM0X.
CSCD300A-S-UUM	=CSCD300A-SUUMX.

Table E.4 (Continued)

Component to Location and Associated Cable Transformation

Component	Transformation
CSCD300B-BF-CC	=CSCD300B-BFCCX+LOC-6E+LOC-8C4+2RH343+2RH344+2RH347.
CSCD300B-PLG-LF	=CSCD300B-PLGLFX.
CSCD300B-RUM-O	=CSCD300B-RUMOX.
CSCD300B-S-UUM	=CSCD300B-SUUMX.
CSCF008A-V-UUM	=CSCF008A-VUUMX.
CSCF014A-XOC-LF	=CSCF014A-XOCLFX.
CSCF014B-XOC-LF	=CSCF014B-XOCLFX.
CSCF028-CCC-LF	=CSCF028-CCCLFX.
CSCF068A-VCC-CC	=CSCF068A-VCCCCX+LOC-3H1+LOC-3G-1+LOC-4C1+2RH074+2RH073 +2RH613.
CSCF068A-VCC-LF	=CSCF068A-VCCLFX+LOC-3H1.
CSCF068B-V-UUM	=CSCF068B-VUUMX.
CSCF068B-VCC-CC	=CSCF068B-VCCCCX+LOC-3H3+LOC-3G-1+LOC-4E2-1+LOC-4C1+2RH078 +2RH077+2RH614.
CSCF068B-VCC-LF	=CSCF068B-VCCLFX+LOC-3H3.
CSCF310-XOC-LF	=CSCF310-XOCLFX.
CSCF311-XOC-LF	=CSCF311-XOCLFX.
CSCF312-XOC-LF	=CSCF312-XOCLFX.
CSCF313-XOC-LF	=CSCF313-XOCLFX.
CSCF314-XOC-LF	=CSCF314-XOCLFX.
CSCF315-XOC-LF	=CSCF315-XOCLFX.
CSCF316-XOC-LF	=CSCF316-XOCLFX.
CSCF317-XOC-LF	=CSCF317-XOCLFX.
CSCF319-RUM-O	=CSCF319-RUMOX.
CSCF319-V-UUM	=CSCF319-VUUMX.
CSCF319-VCC-CC	=CSCF319-VCCCCX+LOC-8C3+LOC-6E+2HP072+2HP074+2HP076+2HP075.
CSCF319-VCC-LF	=CSCF319-VCCLFX+LOC-8C3.
CSCF325-XOC-LF	=CSCF325-XOCLFX.
CSCF330A-XOC-LF	=CSCF330A-XOCLFX.
CSCF330B-XOC-LF	=CSCF330B-XOCLFX.
CSCF330C-XOC-LF	=CSCF330C-XOCLFX.
CSCF330D-XOC-LF	=CSCF330D-XOCLFX.
CSCF331A-CCC-LF	=CSCF331A-CCCLFX.
CSCF331B-CCC-LF	=CSCF331B-CCCLFX.
CSCF331C-CCC-LF	=CSCF331C-CCCLFX.
CSCF331D-CCC-LF	=CSCF331D-CCCLFX.
CSCF332A-XOC-LF	=CSCF332A-XOCLFX.
CSCF332B-XOC-LF	=CSCF332B-XOCLFX.
CSCF332C-XOC-LF	=CSCF332C-XOCLFX.
CSCF332D-XOC-LF	=CSCF332D-XOCLFX.
CSCF336A-RUM-O	=CSCF336A-RUMOX.
CSCF336A-V-UUM	=CSCF336A-VUUMX.

Table E.4 (Continued)

Component to Location and Associated Cable Transformation

Component	Transformation
CSCF336A-VCC-CC	=CSCF336A-VCCCCX+LOC-8C5+LOC-5C11-4+2RH337+2RH341.
CSCF336A-VCC-LF	=CSCF336A-VCCLFX+LOC-8C5.
CSCF336B-RUM-0	=CSCF336B-RUM0X.
CSCF336B-V-UUM	=CSCF336B-VUUMX.
CSCF336B-VCC-CC	=CSCF336B-VCCCCX+LOC-8C4+LOC-6E+2RH346+2RH349.
CSCF336B-VCC-LF	=CSCF336B-VCCLFX+LOC-8C4.
CSCPS001-PIP-LFR	=CSCPS001-PIPLFRX.
CSCPS002-PIP-LFR	=CSCPS002-PIPLFRX.
CSCPS003-PIP-LFR	=CSCPS003-PIPLFRX.
CSCPS005-PIP-LFR	=CSCPS005-PIPLFRX.
CSCPS006-PIP-LFR	=CSCPS006-PIPLFRX.
CSCPS007-PIP-LFR	=CSCPS007-PIPLFRX.
CSCPS008-PIP-LFR	=CSCPS008-PIPLFRX.
CSCPS010-PIP-LFR	=CSCPS010-PIPLFRX.
CSCPS011-PIP-LFR	=CSCPS011-PIPLFRX.
CSCPS012-PIP-LFR	=CSCPS012-PIPLFRX.
CSCPS013-PIP-LFR	=CSCPS013-PIPLFRX.
CSCPS014-PIP-LFR	=CSCPS014-PIPLFRX.
CSCPS015-PIP-LFR	=CSCPS015-PIPLFRX.
CSCPS017-PIP-LFR	=CSCPS017-PIPLFRX.
CSCPS018-PIP-LFR	=CSCPS018-PIPLFRX.
CSCPS019-PIP-LFR	=CSCPS019-PIPLFRX.
CSCPS024-PIP-LFR	=CSCPS024-PIPLFRX.
CSS10HDA-HEDR-R	=CSS10HDA-HEDRRX.
CSS10HDB-HEDR-R	=CSS10HDB-HEDRRX.
CSS16A7A-PIP-LFR	=CSS16A7A-PIPLFRX.
CSS16A7B-PIP-LFR	=CSS16A7B-PIPLFRX.
CSS16B7A-PIP-LFR	=CSS16B7A-PIPLFRX.
CSS16B7B-PIP-LFR	=CSS16B7B-PIPLFRX.
CSSB01AX-B-UUM	=CSSB01AX-BUUMX.
CSSB01AX-BCO-LF	=CSSB01AX-BCOLFX+LOC-3G-1+2RH118.
CSSB01BX-B-UUM	=CSSB01BX-BUUMX.
CSSB01BX-BCO-LF	=CSSB01BX-BCOLFX+LOC-3G-1+2RH122.
CSSB02AX-B-UUM	=CSSB02AX-BUUMX.
CSSB02AX-BCO-LF	=CSSB02AX-BCOLFX+LOC-3G-1+2RH126.
CSSB02BX-B-UUM	=CSSB02BX-BUUMX.
CSSB02BX-BCO-LF	=CSSB02BX-BCOLFX+LOC-3G-1+2RH130.
CSSF16AA-V-UUM	=CSSF16AA-VUUMX.
CSSF16AA-VCC-CC	=CSSF16AA-VCCCCX+LOC-3G-1+LOC-4C1+LOC-4E2-2+LOC-3E+2RH119 +2RH120+2RH121+2RH441.
CSSF16AA-VCC-LF	=CSSF16AA-VCCLFX+LOC-3E.

Table E.4 (Continued)

Component to Location and Associated Cable Transformation

Component	Transformation
CSSF16AA-VCO-CC	=CSSF16AA-VCOCCX+LOC-3G-1+LOC-4C1+LOC-4E2-2+LOC-3E+2RH119 +2RH120+2RH121+2RH441.
CSSF16AA-VCO-LF	=CSSF16AA-VCOLFX+LOC-3E.
CSSF16BB-V-UUM	=CSSF16BB-VUUMX.
CSSF16BB-VCC-CC	=CSSF16BB-VCCCCX+LOC-3G-1+LOC-4C1+LOC-4E2-1+LOC-3E+2RH123 +2RH351+2RH124+2RH125+2RH433.
CSSF16BB-VCC-LF	=CSSF16BB-VCCLFX+LOC-3E.
CSSF16BB-VCO-CC	=CSSF16BB-VCOCCX+LOC-3G-1+LOC-4C1+LOC-4E2-1+LOC-3E+2RH123 +2RH351+2RH124+2RH125+2RH433.
CSSF16BB-VCO-LF	=CSSF16BB-VCOLFX+LOC-3E.
CSSF17AA-V-UUM	=CSSF17AA-VUUMX.
CSSF17AA-VCC-CC	=CSSF17AA-VCCCCX+LOC-3G-1+LOC-4C1+LOC-4E2-2+LOC-3E+2RH127 +2RH128+2RH129+2RH442.
CSSF17AA-VCC-LF	=CSSF17AA-VCCLFX+LOC-3E.
CSSF17AA-VCO-CC	=CSSF17AA-VCOCCX+LOC-3G-1+LOC-4C1+LOC-4E2-2+LOC-3E+2RH127 +2RH128+2RH129+2RH442.
CSSF17AA-VCO-LF	=CSSF17AA-VCOLFX+LOC-3E.
CSSF17BB-V-UUM	=CSSF17BB-VUUMX.
CSSF17BB-VCC-CC	=CSSF17BB-VCCCCX+LOC-3G-1+LOC-4C1+LOC-4E2-1+LOC-3E+2RH131 +2RH132+2RH133+2RH434.
CSSF17BB-VCC-LF	=CSSF17BB-VCCLFX+LOC-3E.
CSSF17BB-VCO-CC	=CSSF17BB-VCOCCX+LOC-3G-1+LOC-4C1+LOC-4E2-1+LOC-3E+2RH131 +2RH132+2RH133+2RH434.
CSSF17BB-VCO-LF	=CSSF17BB-VCOLFX+LOC-3E.
CST-TNK	=CSTTNKX.
CSTF302X-XOC-LF	=CSTF302X-XOCLFX.
CWS000B1-PIP-LFR	=CWS000B1-PIPLFRX.
CWS000B2-PIP-LFR	=CWS000B2-PIPLFRX.
CWS000B3-PIP-LFR	=CWS000B3-PIPLFRX.
CWS000C1-PIP-LFR	=CWS000C1-PIPLFRX.
CWS000D1-PIP-LFR	=CWS000D1-PIPLFRX.
CWS000D2-PIP-LFR	=CWS000D2-PIPLFRX.
CWS006AA-VOC-CC	=CWS006AA-VOCCCX+LOC-LSH+2CW023+2CW066+2CW010+2CW024+2CW067 +2CW073+2CW074.
CWS006AA-VOC-LF	=CWS006AA-VOCLFX+LOC-LSH.
CWS006BB-VOC-CC	=CWS006BB-VOCCCX+LOC-LSH+2CW026+2CW014+2CW027+2CW075.
CWS006BB-VOC-LF	=CWS006BB-VOCLFX+LOC-LSH.
CWS006CA-VOC-CC	=CWS006CA-VOCCCX+LOC-LSH+2CW029+2CW018+2CW030+2CW078.
CWS006CA-VOC-LF	=CWS006CA-VOCLFX+LOC-LSH.
CWS007AD-VOC-CC	=CWS007AD-VOCCCX+LOC-5B2+LOC-4C1+LOC-5E2+2CW032+2CW033.
CWS007AD-VOC-LF	=CWS007AD-VOCLFX+LOC-5B2.
CWS007BE-VOC-CC	=CWS007BE-VOCCCX+LOC-5B2+LOC-4C1+LOC-5D4+2CW035+2CW036.

Table E.4 (Continued)

Component to Location and Associated Cable Transformation

Component	Transformation
CWS007BE-VOC-LF	=CWS007BE-VOCLFX+LOC-5B2.
CWS007CD-VOC-CC	=CWS007CD-VOCCCX+LOC-5B2+LOC-4C1+LOC-5E2+2CW038+2CW039.
CWS007CD-VOC-LF	=CWS007CD-VOCLFX+LOC-5B2.
CWS007DE-VOC-CC	=CWS007DE-VOCCCX+LOC-5B2+LOC-4C1+LOC-5D4+2CW041+2CW042.
CWS007DE-VOC-LF	=CWS007DE-VOCLFX+LOC-5B2.
CWS01PAA-ESF-CC	=CWS01PAA-ESFCCX+LOC-LSH+2CW203+2CW2042.
CWS01PAA-PMS-CC	=CWS01PAA-PMSCCX+LOC-LSH+LOC-4C1+LOC-5C11-4+2CW013+2CW053 +2CW0542CW055+2CW056+2CW100+2CW200+2CW201+2CW202+2CW205.
CWS01PAA-PMS-LF	=CWS01PAA-PMSLFX+LOC-LSH.
CWS01PBB-ESF-CC	=CWS01PBB-ESFCCX+LOC-LSH+2CW213+2CW214.
CWS01PBB-PMS-CC	=CWS01PBB-PMSCCX+LOC-LSH+LOC-4C1+LOC-5B13-2+2CW210+2CW211 +2CW212+2CW101+2CW017+2CW206.
CWS01PBB-PMS-LF	=CWS01PBB-PMSLFX+LOC-LSH.
CWS01PCA-ESF-CC	=CWS01PCA-ESFCCX+LOC-LSH+2CW223+2CW224.
CWS01PCA-PMS-CC	=CWS01PCA-PMSCCX+LOC-LSH+LOC-4C1+LOC-5C11-4+2CW220+2CW221 +2CW222+2CW021.
CWS01PCA-PMS-LF	=CWS01PCA-PMSLFX+LOC-LSH.
CWSB01PA-BCO-CC	=CWSB01PA-BCOCCX+LOC-5C11-4+LOC-LSH+2CW012.
CWSB01PA-BCO-LF	=CWSB01PA-BCOLFX+LOC-5C11-4+2CW011.
CWSB01PB-BCO-CC	=CWSB01PB-BCOCCX+LOC-5B13-2+LOC-LSH+2CW016.
CWSB01PB-BCO-LF	=CWSB01PB-BCOLFX+LOC-5B13-2+2CW015.
CWSB01PC-BCO-CC	=CWSB01PC-BCOCCX+LOC-LSH+LOC-5C11-4+2CW020.
CWSB01PC-BCO-LF	=CWSB01PC-BCOLFX+LOC-LSH+2CW019.
CYS0001X-XOC-LF	=CYS0001X-XOCLFX.
CYS0002X-XOC-LF	=CYS0002X-XOCLFX.
CYS012AX-XOC-LF	=CYS012AX-XOCLFX.
CYS012BX-XOC-LF	=CYS012BX-XOCLFX.
CYS013AX-CCC-LF	=CYS013AX-CCCLFX.
CYS013BX-CCC-LF	=CYS013BX-CCCLFX.
CYS014AX-XOC-LF	=CYS014AX-XOCLFX.
CYS014BX-XOC-LF	=CYS014BX-XOCLFX.
CYS02PAD-PMS-LF	=CYS02PAD-PMSLFX+LOC-5D4.
CYS02PBE-PMS-LF	=CYS02PBE-PMSLFX+LOC-5D4.
CYSCB2PA-BOO-CC	=CYSCB2PA-BOOCCX+LOC-5E2+LOC-4C1+2CY011+2CY012.
CYSCB2PA-BOO-LF	=CYSCB2PA-BOOLFX+LOC-5E2+2CY010.
CYSCB2PB-BOO-CC	=CYSCB2PB-BOOCCX+LOC-5D4+LOC-4C1+2CY015+2CY013.
CYSCB2PB-BOO-LF	=CYSCB2PB-BOOLFX+LOC-5D4+2CY014.
CYSF02PA-FUS-LF	=CYSF02PA-FUSLFX+LOC-5E2.
CYSF02PB-FUS-LF	=CYSF02PB-FUSLFX+LOC-5D4.
CYST02PA-TFM-LF	=CYST02PA-TFMLFX+LOC-5E2.
CYST02PB-TFM-LF	=CYST02PB-TFMLFX+LOC-5D4.
DOV-MOD-COM-CC	=DOV-MOD-COMCCX+LOC-4F2+LOC-4F1+LOC-7A3+LOC-4C1+LOC-7B3.

Table E.4 (Continued)

Component to Location and Associated Cable Transformation

Component	Transformation
D0VB101X-BCO-LF	=D0VB101X-BCOLFX+LOC-4F1.
D0VB102X-BCO-LF	=D0VB102X-BCOLFX+LOC-4F1.
D0VB201X-B-UUM	=D0VB201X-BUUMX.
D0VB201X-BCO-LF	=D0VB201X-BCOLFX+LOC-4F2+2VD010.
D0VB201X-RUM-0	=D0VB201X-RUM0X.
D0VB202X-BCO-LF	=D0VB202X-BCOLFX+LOC-4F2.
D0VMODCOM-CC-UUM	=D0VMODCOM-CCUUMX.
D0VMODCOM-RUM-0	=D0VMODCOM-RUM0X.
DAV-MOD-COM-CC	=DAV-MOD-COMCCX+LOC-4E4+LOC-8A2+LOC-4C1+LOC-8B1+LOC-8A1 +2VD062+2VD063+2VD064.
DAVB001X-B-UUM	=DAVB001X-BUUMX.
DAVB001X-BCO-LF	=DAVB001X-BCOLFX+LOC-4E4+2VD012.
DAVB002X-BCO-LF	=DAVB002X-BCOLFX+LOC-4E4.
DAVMODCOM-CC-UUM	=DAVMODCOM-CCUUMX.
DG-CM	=DGCMX.
DG0-G-UUM	=DG0-GUUMX.
DG0-GEN-CC	=DG0-GENCCX+LOC-7B3+LOC-4F2+LOC-4E2-2+LOC-4C1+2DG052+2DG213 +2DG090+2DG091.
DG0-GEN-LF	=DG0-GENLFX+LOC-7B3.
DG0MOD-RUM-0	=DG0MOD-RUM0X.
DG0V01CA-F-UUM	=DG0V01CA-FUUMX.
DG0V01CA-FMS-CC	=DG0V01CA-FMSCCX+LOC-7A3+LOC-7B3+LOC-4F2+2VD077.
DG0V01CA-FMS-LF	=DG0V01CA-FMSLFX+LOC-7A3.
DG0V01CA-RUM-0	=DG0V01CA-RUM0X.
DG0V01FX-KLN-LFB	=DG0V01FX-KLNLFBX.
DG0V01YA-M-UUM	=DG0V01YA-MUUMX.
DG0V01YA-MCC-LF	=DG0V01YA-MCCLFX+LOC-7A3.
DG0V02YA-M-UUM	=DG0V02YA-MUUMX.
DG0V02YA-MOO-LF	=DG0V02YA-MOOLFX+LOC-7A3.
DG0V03YA-M-UUM	=DG0V03YA-MUUMX.
DG0V03YA-MCC-LF	=DG0V03YA-MCCLFX+LOC-7A3.
DG0V40YA-EOC-LF	=DG0V40YA-EOCLFX+LOC-7B3.
DG0V41YA-EOC-LF	=DG0V41YA-EOCLFX+LOC-7B3.
DG0XCP3X-CPC-LFC	=DG0XCP3X-CPCLFCX+LOC-7B3.
DG0XCP4X-CPC-LFC	=DG0XCP4X-CPCLFCX+LOC-7B3.
DG0XCP5X-CPC-LFC	=DG0XCP5X-CPCLFCX+LOC-7B3.
DG0XCP6X-CPC-LFC	=DG0XCP6X-CPCLFCX+LOC-7B3.
DG2A-G-UUM	=DG2A-GUUMX.

Table E.4 (Continued)

Component to Location and Associated Cable Transformation

Component	Transformation
DG2A-GEN-CC	=DG2A-GENCCX+LOC-8B2+LOC-4C1+LOC-4E4+LOC-4E2-1+2DG065+2DG066 +2DG063+2DG064+2DG149+2DG150+2DG151+2DG152+2DG153+2DG154 +2DG155+2DG156+2DG157+2DG158+2DG082+2DG083+2DG011+2DG211 +2DG141+2DG142+2DG164+2DG015+2DG147+2DG145+2DG146+2DG148 +2DG048+2DG049+2DG143+2DG144+2DG038+2DG054+2DG029+2DG014 +2DG047+2DG055+2DG039+2DG023+2DG021.
DG2A-GEN-LF	=DG2A-GENLFX+LOC-8B2.
DG2B-G-UUM	=DG2B-GUUMX.
DG2B-GEN-CC	=DG2B-GENCCX+LOC-8B1+LOC-5D2+LOC-4C1+2HP193+2HP192+2HP191 +2HP190+2HP189+2HP181+2HP182+2HP183+2HP184+2HP185+2HP186 +2HP187+2HP188+2HP194+2HP195+2HP196+2HP197+2HP198+2HP199 +2HP200+2HP201+2HP202+2HP203+2HP204+2HP205+2HP206+2HP207 +2HP208+2HP209.
DG2B-GEN-LF	=DG2B-GENLFX+LOC-8B1.
DG2V02FX-KLN-LFB	=DG2V02FX-KLNLFBX.
DG2V03CB-F-UUM	=DG2V03CB-FUUMX.
DG2V03CB-FMS-CC	=DG2V03CB-FMSCCX+LOC-8A1+LOC-8A2+LOC-4E4+LOC-8B1+LOC-8B2 +2VD013+2VD035+2VD036+2VD037.
DG2V03CB-FMS-LF	=DG2V03CB-FMSLFX+LOC-8A1.
DG2V09YB-M-UUM	=DG2V09YB-MUUMX.
DG2V09YB-MCC-LF	=DG2V09YB-MCCLFX+LOC-8A1.
DG2V10YB-M-UUM	=DG2V10YB-MUUMX.
DG2V10YB-MOO-LF	=DG2V10YB-MOOLFX+LOC-8A1.
DG2V11YB-M-UUM	=DG2V11YB-MUUMX.
DG2V11YB-MCC-LF	=DG2V11YB-MCCLFX+LOC-8A1.
DG2V43YB-EOC-LF	=DG2V43YB-EOCLFX+LOC-8B1+2VD125+2VD126+2VD164+2VD165+2VD166 +2VD167+2VD162+2VD168+2VD169+2VD170+2VD171.
DG2V44YB-EOC-LF	=DG2V44YB-EOCLFX+LOC-8B1+2VD125+2VD126+2VD122+2VD133+2VD172 +2VD185+2VD186+2VD191+2VD173+2VD187+2VD188+2VD189+2VD190.
DG2XCP3X-CPC-LFC	=DG2XCP3X-CPCLFCX+LOC-8B1.
DG2XCP4X-CPC-LFC	=DG2XCP4X-CPCLFCX+LOC-8B1.
DG2XCP5X-CPC-LFC	=DG2XCP5X-CPCLFCX+LOC-8B1.
DGCOOL-CM	=DGCOOLCMX.
DGHV01CC-F-UUM	=DGHV01CC-FUUMX.
DGHV01CC-FMS-CC	=DGHV01CC-FMSCCX+LOC-8A2+LOC-5D2+LOC-8B2+LOC-5C11-10+2VD015 +2VD039+2VD040+2VD041.
DGHV01CC-FMS-LF	=DGHV01CC-FMSLFX+LOC-8A2.
DGHV01FX-KLN-LFB	=DGHV01FX-KLNLFBX.
DGHV01YC-M-UUM	=DGHV01YC-MUUMX.
DGHV01YC-MCC-LF	=DGHV01YC-MCCLFX+LOC-8A2.
DGHV02YC-M-UUM	=DGHV02YC-MUUMX.
DGHV02YC-MOO-LF	=DGHV02YC-MOOLFX+LOC-8A2.

Table E.4 (Continued)

Component to Location and Associated Cable Transformation

Component	Transformation
DGHV03YC-M-UUM	=DGHV03YC-MUUMX.
DGHV03YC-MCC-LF	=DGHV03YC-MCCLFX+LOC-8A2.
DGHV40YC-EOC-LF	=DGHV40YC-EOCLFX+LOC-8B2+2VD130+2VD152+2VD153+2VD154+2VD155 +2VD150+2VD156+2VD157+2VD158+2VD159+2VD121+2VD123+2VD124 +2VD180.
DGHV41YC-EOC-LF	=DGHV41YC-EOCLFX+LOC-8B2+2VD131+2VD181+2VD182+2VD160+2VD121 +2VD123+2VD124+2VD180.
DGOF13X-FUS-LF	=DGOF13X-FUSLFX+LOC-7B3.
DGOF14X-FUS-LF	=DGOF14X-FUSLFX+LOC-7B3.
DHV-MOD-COM-CC	=DHV-MOD-COMCCX+LOC-5D2+LOC-8A2+LOC-4C1+LOC-8B2+2VD068 +2VD069+2VD070.
DHVB001X-B-UUM	=DHVB001X-BUUMX.
DHVB001X-BCO-LF	=DHVB001X-BCOLFX+LOC-5D2+2VD014.
DHVB002X-BCO-LF	=DHVB002X-BCOLFX+LOC-5D2.
DHVMODCOM-CC-UUM	=DHVMODCOM-CCUUMX.
DPS-AIR-NEEDED	=DPS-AIRNEEDEDX.
DPS001AB-NOC-LF	=DPS001AB-NOCLFX+LOC-3E.
DPS001BA-NOC-LF	=DPS001BA-NOCLFX+LOC-3E.
DPS004AA-SOC-CC	=DPS004AA-SOCCCX+LOC-3E+2IN053.
DPS004AA-SOC-LF	=DPS004AA-SOCLFX+LOC-3E.
DPS004AX-XOC-LF	=DPS004AX-XOCLFX.
DPS004BB-SOC-CC	=DPS004BB-SOCCCX+LOC-3E+2IN055.
DPS004BB-SOC-LF	=DPS004BB-SOCLFX+LOC-3E.
DPS004BX-XOC-LF	=DPS004BX-XOCLFX.
DPS005AX-XOC-LF	=DPS005AX-XOCLFX.
DPS005BX-XOC-LF	=DPS005BX-XOCLFX.
DPS006AX-XOC-LF	=DPS006AX-XOCLFX.
DPS006BX-XOC-LF	=DPS006BX-XOCLFX.
DPS008AX-RCO-LFM	=DPS008AX-RCOLFMX.
DPS008BX-RCO-LFM	=DPS008BX-RCOLFMX.
DPS011AX-XOC-LF	=DPS011AX-XOCLFX.
DPS011BX-XOC-LF	=DPS011BX-XOCLFX.
DPS012AX-XOC-LF	=DPS012AX-XOCLFX.
DPS012BX-XOC-LF	=DPS012BX-XOCLFX.
DPS019AX-RCO-LFM	=DPS019AX-RCOLFMX.
DPS019BX-RCO-LFM	=DPS019BX-RCOLFMX.
DPS01CAA-EMS-CC	=DPS01CAA-EMSCCX+LOC-3E+LOC-3F-1+2IN014+2IN015+2IN011+2IN040 +2IN042.
DPS01CAA-EMS-LF	=DPS01CAA-EMSLFX+LOC-3E.
DPS024AX-COC-LF	=DPS024AX-COCLFX.
DPS024BX-COC-LF	=DPS024BX-COCLFX.
DPS024CX-COC-LF	=DPS024CX-COCLFX.

Table E.4 (Continued)

Component to Location and Associated Cable Transformation

Component	Transformation
DPS024DX-COC-LF	=DPS024DX-COCLFX.
DPS03DAA-DOC-LF	=DPS03DAA-DOCLFX+LOC-3E.
DPS03DBB-DOC-LF	=DPS03DBB-DOCLFX+LOC-3E.
DPS04AAX-HTX-LFI	=DPS04AAX-HTXLFIX.
DPS04ABX-HTX-LFI	=DPS04ABX-HTXLFIX.
DPS061AX-RCO-LFM	=DPS061AX-RCOLFMX.
DPS061BX-RCO-LFM	=DPS061BX-RCOLFMX.
DPS06EAX-FAC-LF	=DPS06EAX-FACLFX.
DPS06FBX-FAC-LF	=DPS06FBX-FACLFX.
DPS072AX-COC-LF	=DPS072AX-COCLFX.
DPS072BX-COC-LF	=DPS072BX-COCLFX.
DPS09TAX-NBT-LF	=DPS09TAX-NBTLFX+LOC-3E.
DPS09TBX-NBT-LF	=DPS09TBX-NBTLFX+LOC-3E.
DPS09TCX-NBT-LF	=DPS09TCX-NBTLFX+LOC-3E.
DPS09TDX-NBT-LF	=DPS09TDX-NBTLFX+LOC-3E.
DPS09TEX-NBT-LF	=DPS09TEX-NBTLFX+LOC-3E.
DPS09TFX-NBT-LF	=DPS09TFX-NBTLFX+LOC-3E.
DPS09TGX-NBT-LF	=DPS09TGX-NBTLFX+LOC-3E.
DPS09THX-NBT-LF	=DPS09THX-NBTLFX+LOC-3E.
DPS12FAX-FAC-LF	=DPS12FAX-FACLFX.
DPS2735X2-BCO	=DPS2735X2BCOX+LOC-4F2.
DPS9MA1X-XOC-LF	=DPS9MA1X-XOCLFX.
DPS9MA2X-XOC-LF	=DPS9MA2X-XOCLFX.
DPS9MB1X-XOC-LF	=DPS9MB1X-XOCLFX.
DPS9MB2X-XOC-LF	=DPS9MB2X-XOCLFX.
DPS9TAVX-XOC-LF	=DPS9TAVX-XOCLFX.
DPS9TBVX-XOC-LF	=DPS9TBVX-XOCLFX.
DPS9TCVX-XOC-LF	=DPS9TCVX-XOCLFX.
DPS9TDVX-XOC-LF	=DPS9TDVX-XOCLFX.
DPS9TEVX-XOC-LF	=DPS9TEVX-XOCLFX.
DPS9TFVX-XOC-LF	=DPS9TFVX-XOCLFX.
DPS9TGVX-XOC-LF	=DPS9TGVX-XOCLFX.
DPS9THVX-XOC-LF	=DPS9THVX-XOCLFX.
DPSB16AA-BCO	=DPSB16AABCOX+LOC-3F-1+2IN052.
DPSB20AB-BCO	=DPSB20ABBCOX+LOC-3F-1+2IN054.
DPSCAAAB-HTX-LFR	=DPSCAAAB-HTXLFRX.
DPSCCFNX-HF-NBBN	=DPSCCFNX-HFNBBNX.
DPSCCFSX-HF-NBBS	=DPSCCFSX-HFNBBSX.
DPSE136X2-BCO	=DPSE136X2BCOX+LOC-4E4.
DPSFS15A-FUS-LF	=DPSFS15A-FUSLFX+LOC-3F-1.
DPSFS15B-FUS-LF	=DPSFS15B-FUSLFX+LOC-3F-1.
DPSN002X-XOC-LF	=DPSN002X-XOCLFX.

Table E.4 (Continued)

Component to Location and Associated Cable Transformation

Component	Transformation
DPSN003X-XOC-LF	=DPSN003X-XOCLFX.
DPSN007X-XOC-LF	=DPSN007X-XOCLFX.
DPSN008X-COC-LF	=DPSN008X-COCLFX.
DPSN009X-XOC-LF	=DPSN009X-XOCLFX.
DPSN010X-COC-LF	=DPSN010X-COCLFX.
DPSN014X-XOC-LF	=DPSN014X-XOCLFX.
DPSN015X-POC-LF	=DPSN015X-POCLFX+LOC-3E.
DPSN016X-XOC-LF	=DPSN016X-XOCLFX.
DPSN017B-NOC-LF	=DPSN017B-NOCLFX+LOC-3E.
DPSN018X-COC-LF	=DPSN018X-COCLFX.
DPSN02TX-NAR-LF	=DPSN02TX-NARLFX.
DPSN035X-POC-LF	=DPSN035X-POCLFX+LOC-3E.
DPSN038X-POC-LF	=DPSN038X-POCLFX+LOC-3E.
DPSN043X-COC-LF	=DPSN043X-COCLFX.
DPSN044X-COC-LF	=DPSN044X-COCLFX.
DPSN045X-RCO-LFM	=DPSN045X-RCOLFMX.
DPSN046X-RCO-LFM	=DPSN046X-RCOLFMX.
DPSN049X-COC-LF	=DPSN049X-COCLFX.
DPSN04MX-FAC-LF	=DPSN04MX-FACLFX.
DPSN050X-XOC-LF	=DPSN050X-XOCLFX.
DPSN051X-COC-LF	=DPSN051X-COCLFX.
DPSN052X-XOC-LF	=DPSN052X-XOCLFX.
DPSN089X-XOC-LF	=DPSN089X-XOCLFX.
DPSN090X-XOC-LF	=DPSN090X-XOCLFX.
DPSN0CBB-EMS-CC	=DPSN0CBB-EMSCCX+LOC-3E+LOC-3F-1+2IN017+2IN018+2IN013.
DPSN0CBB-EMS-LF	=DPSN0CBB-EMSLFX+LOC-3E.
DPSN119X-XOC-LF	=DPSN119X-XOCLFX.
DPSN128X-XOC-LF	=DPSN128X-XOCLFX.
DPSPSIN1-PIP-LFR	=DPSPSIN1-PIPLFRX.
DPSPSIN2-PIP-LFR	=DPSPSIN2-PIPLFRX.
DPSPSIN6-PIP-LFR	=DPSPSIN6-PIPLFRX.
DPSPSN10-PIP-LFR	=DPSPSN10-PIPLFRX.
DPSPSN14-PIP-LFR	=DPSPSN14-PIPLFRX.
DPSPSN15-PIP-LFR	=DPSPSN15-PIPLFRX.
DPSPSN16-PIP-LFR	=DPSPSN16-PIPLFRX.
DWPF100-SOC-LF	=DWPF100-SOCLFX+LOC-3E+2IN047+2IN082+2IN080.
DWPF101-SOC-LF	=DWPF101-SOCLFX+LOC-3E+2IN051+2IN083+2IN081.
DWPF29X-XOC-LF	=DWPF29X-XOCLFX.
DWPF30X-XOC-LF	=DWPF30X-XOCLFX.
DWPPS001-PIP-LFR	=DWPPS001-PIPLFRX.
DWPPS002-PIP-LFR	=DWPPS002-PIPLFRX.
DWPPS003-PIP-LFR	=DWPPS003-PIPLFRX.

Table E.4 (Continued)

Component to Location and Associated Cable Transformation

Component	Transformation
DWPPS004-PIP-LFR	=DWPPS004-PIPLFRX.
DWPPS005-PIP-LFR	=DWPPS005-PIPLFRX.
DWPPS006-PIP-LFR	=DWPPS006-PIPLFRX.
DWPPS007-PIP-LFR	=DWPPS007-PIPLFRX.
DWPPS008-PIP-LFR	=DWPPS008-PIPLFRX.
DWPPS009-PIP-LFR	=DWPPS009-PIPLFRX.
ECHBYCON-LOG-LFO	=ECHBYCON-LOGLFOX+LOC-4E2-1+LOC-5B6+LOC-4C1+2EH135+2EH137.
EE-C0DG01F-PLG	=EE-C0DG01FPLGX.
EE-C2DG01F-PLG	=EE-C2DG01FPLGX.
EE-CSCD300-PLG	=EE-CSCD300PLGX.
EE-CSCD300A-PLG	=EE-CSCD300APLGX.
EE-CSCD300B-PLG	=EE-CSCD300BPLGX.
EE-CST-LVL	=EE-CSTLVLX.
EE-LOCA-RECIRCA	=EE-LOCARECIRCAX.
EE-LOCA-RECIRCB	=EE-LOCARECIRCBX.
EE-MDC-DPS-A-RU	=EE-MDC-DPS-ARUX.
EE-MDC-DPS-B-RU	=EE-MDC-DPS-BRUX.
EE-MDC-IAS-AB-R	=EE-MDC-IAS-ABRX.
EE-MDC-IAS-AC-R	=EE-MDC-IAS-ACRX.
EE-MDC-IAS-CB-R	=EE-MDC-IAS-CBRX.
EE-MDP-PSW-AB-R	=EE-MDP-PSW-ABRX.
EE-MDP-PSW-BC-R	=EE-MDP-PSW-BCRX.
EE-MDP-PSW-CA-R	=EE-MDP-PSW-CARX.
EE-OP-ERROR	=EE-OPERRORX+LOC-4C1.
EHC000A1-PIP-LFR	=EHC000A1-PIPLFRX.
EHC000A2-PIP-LFR	=EHC000A2-PIPLFRX.
EHC000B1-PIP-LFR	=EHC000B1-PIPLFRX.
EHCBHFPA-BCO	=EHCBHFPABCOX+LOC-5C11+2EH100.
EHCBHFPB-BOO	=EHCBHFPBBOOX+LOC-5B4+2EH105.
EHCCVA1X-COC-LF	=EHCCVA1X-COCLFX.
EHCCVA2X-CCC-LF	=EHCCVA2X-CCCLFX.
EHCF0212X-FUS-LF	=EHCF0212X-FUSLFX+LOC-4E2-1.
EHCF6Y3X-FUS-LF	=EHCF6Y3X-FUSLFX+LOC-4E2-1.
EHCHFPAD-PMS-CC	=EHCHFPAD-PMSCCX+LOC-5C11+LOC-5C11-3+2EH101+2EH102+2EH103.
EHCHFPAD-PMS-LF	=EHCHFPAD-PMSLFX+LOC-5C11-3.
EHCHFPBE-PMS-AS	=EHCHFPBE-PMSASX+LOC-5B4.
EHCHFPBE-PMS-CC	=EHCHFPBE-PMSCCX+LOC-5B4+LOC-5C11-3+2EH106+2EH107+2EH108.
EHCHFPBE-PMS-LF	=EHCHFPBE-PMSLFX+LOC-5C11-3.
EHCPRCON-LOG-LFO	=EHCPRCON-LOGLFOX+LOC-4E2-1+LOC-5B6+LOC-4C1+2EH136+2EH138.
EHCSVALV1-SOC-LF	=EHCSVALV1-SOCLFX+LOC-5B2.
EHCSVALV2-SOC-LF	=EHCSVALV2-SOCLFX+LOC-5B2.
EHCSVALV3-SOC-LF	=EHCSVALV3-SOCLFX+LOC-5B2.

Table E.4 (Continued)

Component to Location and Associated Cable Transformation

Component	Transformation
EHCSVALV4-SOC-LF	=EHCSVALV4-SOCLFX+LOC-5B2.
EHCSVALV5-SOC-LF	=EHCSVALV5-SOCLFX+LOC-5B2.
ES275X-1-LFCO	=ES275X-1LFCOX+LOC-5D2.
ES275Y-1-LFCO	=ES275Y-1LFCOX+LOC-5D2.
FAULT-SJAE	=FAULTSJAEX+LOC-5A3-1+LOC-5A3-4+LOC-5B2.
FAULT-TGSS	=FAULTTGSSX+LOC-5A3-9+LOC-5A3-10+LOC-5A2-1+LOC-5A2-2+LOC-5B2.
FCSB35X3-BCO	=FCSB35X3BCOX+LOC-4F2+2NB225.
FCSF0004-FUS-LF	=FCSF0004-FUSLFX+LOC-4E2-1.
FCSF001A-FUS-LF	=FCSF001A-FUSLFX+LOC-4E2-1.
FCSF007A-FUS-LF	=FCSF007A-FUSLFX+LOC-4E2-1.
FCSF009A-FUS-LF	=FCSF009A-FUSLFX+LOC-4E2-1.
FCSK13M2R2-LFOO	=FCSK13M2R2LFOOX+LOC-4E2-1.
FCSK13M3R3-LFOO	=FCSK13M3R3LFOOX+LOC-4E2-1.
FCSK13R1M1-LFOO	=FCSK13R1M1LFOOX+LOC-4E2-1.
FCSK15A-LFO	=FCSK15ALFOX+LOC-4E2-1.
FCSK15AM2T2-LFOO	=FCSK15AM2T2LFOOX+LOC-4E2-1.
FCSK15AR3M3-LFCO	=FCSK15AR3M3LFCOX+LOC-4E2-1.
FCSK15B-LFO	=FCSK15BLFOX+LOC-4E2-1.
FCSK15BM2T2-LFOO	=FCSK15BM2T2LFOOX+LOC-4E2-1.
FCSK15BR3M3-LFCO	=FCSK15BR3M3LFCOX+LOC-4E2-1.
FCSK1BM4T4-LFCC	=FCSK1BM4T4LFCCX+LOC-4E2-1.
FCSK1CT1M1-LFOO	=FCSK1CT1M1LFOOX+LOC-4E2-1.
FCSK2BM4T4-LFCC	=FCSK2BM4T4LFCCX+LOC-4E2-1.
FCSK2CT1M1-LFOO	=FCSK2CT1M1LFOOX+LOC-4E2-1.
FCSK4AR4M4-LFOO	=FCSK4AR4M4LFOOX+LOC-4E2-1.
FCSK4BR4M4-LFOO	=FCSK4BR4M4LFOOX+LOC-4E2-1.
FCSK7A-LFO	=FCSK7ALFOX+LOC-4E2-1.
FCSK7AR1M1-LFOC	=FCSK7AR1M1LFOCX+LOC-4E2-1.
FCSK7AR2M2-LFOC	=FCSK7AR2M2LFOCX+LOC-4E2-1.
FCSK7AR3M3-LFOC	=FCSK7AR3M3LFOCX+LOC-4E2-1.
FCSK7AR4M4-LFOC	=FCSK7AR4M4LFOCX+LOC-4E2-1.
FCSK7B-LFO	=FCSK7BLFOX+LOC-4E2-1.
FCSK7BR1M1-LFOC	=FCSK7BR1M1LFOCX+LOC-4E2-1.
FCSK7BR2M2-LFOC	=FCSK7BR2M2LFOCX+LOC-4E2-1.
FCSK7BR3M3-LFOC	=FCSK7BR3M3LFOCX+LOC-4E2-1.
FCSK7BR4M4-LFOC	=FCSK7BR4M4LFOCX+LOC-4E2-1.
FCSK7C-LFO	=FCSK7CLFOX+LOC-4E2-1.
FCSK7CR1M1-LFOC	=FCSK7CR1M1LFOCX+LOC-4E2-1.
FCSK7CR2M2-LFOC	=FCSK7CR2M2LFOCX+LOC-4E2-1.
FCSK7CR3M3-LFOC	=FCSK7CR3M3LFOCX+LOC-4E2-1.
FCSK7CR4M4-LFOC	=FCSK7CR4M4LFOCX+LOC-4E2-1.
FCSK7D-LFO	=FCSK7DLFOX+LOC-4E2-1.

Table E.4 (Continued)

Component to Location and Associated Cable Transformation

Component	Transformation
FCSK7DM4T4-LFCO	=FCSK7DM4T4LFCOX+LOC-4E2-1.
FCSK7DR1M1-LFOC	=FCSK7DR1M1LFOCX+LOC-4E2-1.
FCSK7DR2M2-LFOC	=FCSK7DR2M2LFOCX+LOC-4E2-1.
FCSK7E-LFO	=FCSK7ELFOX+LOC-4E2-1.
FCSK7EM4T4-LFCO	=FCSK7EM4T4LFCOX+LOC-4E2-1.
FCSK7ER1M1-LFOC	=FCSK7ER1M1LFOCX+LOC-4E2-1.
FCSK7ER2M2-LFOC	=FCSK7ER2M2LFOCX+LOC-4E2-1.
FCSK7F-LFO	=FCSK7FLFOX+LOC-4E2-1.
FCSK7FM4T4-LFCO	=FCSK7FM4T4LFCOX+LOC-4E2-1.
FCSK7FR1M1-LFOC	=FCSK7FR1M1LFOCX+LOC-4E2-1.
FCSK7FR2M2-LFOC	=FCSK7FR2M2LFOCX+LOC-4E2-1.
FCSS2-Q-OE-O	=FCSS2-Q-OEOX+LOC-4C1.
FCSS2-QOO-LFO	=FCSS2-QOOLFOX+LOC-4C1.
FCST35X3-TFM-LF	=FCST35X3-TFMLFX+LOC-4F2.
FLOW-CSS-A7A	=FLOW-CSSA7AX.
FLOW-CSS-B7A	=FLOW-CSSB7AX.
FLOW-RHR-A1	=FLOW-RHRA1X.
FLOW-RHR-A3	=FLOW-RHRA3X.
FLOW-RHR-B1	=FLOW-RHRB1X.
FLOW-RHR-B3	=FLOW-RHRB3X.
FLOW-SCS-A1A	=FLOW-SCSA1AX.
FLOW-SCS-A6B	=FLOW-SCSA6BX.
FLOW-SCS-B1A	=FLOW-SCSB1AX.
FLOW-SCS-B6A	=FLOW-SCSB6AX.
FLOW-SCS-C1A	=FLOW-SCSC1AX.
FLOW-SPC-A5X	=FLOW-SPCA5XX.
FLOW-SPC-B5X	=FLOW-SPCB5XX.
G2BXCP3X-CPC-LFC	=G2BXCP3X-CPCLFCX+LOC-8B2.
G2BXCP4X-CPC-LFC	=G2BXCP4X-CPCLFCX+LOC-8B2.
G2BXCP5X-CPC-LFC	=G2BXCP5X-CPCLFCX+LOC-8B2.
HACTCPF1-FUS-LF	=HACTCPF1-FUSLFX+LOC-5D2.
HACTCPF2-FUS-LF	=HACTCPF2-FUSLFX+LOC-5D2.
HACTK11-ROO-LFO	=HACTK11-ROOLFOX+LOC-5D2.
HACTK11CP4-LFCC	=HACTK11CP4LFCCX+LOC-5D2.
HACTK12CP1-LFOC	=HACTK12CP1LFOCX+LOC-5D2.
HACTK13CP1-LFOC	=HACTK13CP1LFOCX+LOC-5D2.
HACTK13CP3-LFOC	=HACTK13CP3LFOCX+LOC-5D2.
HACTK13CP5-LFCO	=HACTK13CP5LFCOX+LOC-5D2.
HACTK14CP1-LFOC	=HACTK14CP1LFOCX+LOC-5D2.
HACTK14CP4-LFCO	=HACTK14CP4LFCOX+LOC-5D2.
HACTK15-ROO-LFO	=HACTK15-ROOLFOX+LOC-5D2.
HACTK15CP1-LFOO	=HACTK15CP1LFOOX+LOC-5D2.

Table E.4 (Continued)

Component to Location and Associated Cable Transformation

Component	Transformation
HACTK16-ROO-LFO	=HACTK16-ROOLFOX+LOC-5D2.
HACTK16CP1-LFOO	=HACTK16CP1LFOOX+LOC-5D2.
HACTK17-ROO-LFO	=HACTK17-ROOLFOX+LOC-5D2.
HACTK17CP1-LFOO	=HACTK17CP1LFOOX+LOC-5D2.
HACTK17CP5-LFOO	=HACTK17CP5LFOOX+LOC-5D2.
HACTK18-ROO-LFO	=HACTK18-ROOLFOX+LOC-5D2.
HACTK18CP1-LFOO	=HACTK18CP1LFOOX+LOC-5D2.
HACTK18CP5-LFOO	=HACTK18CP5LFOOX+LOC-5D2.
HACTK22CP1-LFOC	=HACTK22CP1LFOCX+LOC-5D2.
HACTK24-ROO-LFO	=HACTK24-ROOLFOX+LOC-5D2.
HACTK24CP1-LFOO	=HACTK24CP1LFOOX+LOC-5D2.
HACTK2CP1-LFOC	=HACTK2CP1LFOCX+LOC-5D2.
HACTK3-ROO-LFO	=HACTK3-ROOLFOX+LOC-5D2.
HACTK3-ROO-LFO	=HACTK3-ROOLFOX+LOC-5D2.
HACTK30CP1-LFOC	=HACTK30CP1LFOCX+LOC-5D2.
HACTK30CP3-LFCO	=HACTK30CP3LFCOX+LOC-5D2.
HACTK31-ROO-LFO	=HACTK31-ROOLFOX+LOC-5D2.
HACTK31CP1-LFOO	=HACTK31CP1LFOOX+LOC-5D2.
HACTK32CPM1-LFCO	=HACTK32CPM1LFCOX+LOC-5D2.
HACTK32CPM2-LFOC	=HACTK32CPM2LFOCX+LOC-5D2.
HACTK3CP7-LFOO	=HACTK3CP7LFOOX+LOC-5D2.
HACTK3CP9-LFOO	=HACTK3CP9LFOOX+LOC-5D2.
HACTK5-ROO-LFO	=HACTK5-ROOLFOX+LOC-5D2.
HACTK5CP1-LFOO	=HACTK5CP1LFOOX+LOC-5D2.
HACTK6-ROO-LFO	=HACTK6-ROOLFOX+LOC-5D2.
HACTK6CP1-LFOO	=HACTK6CP1LFOOX+LOC-5D2.
HACTK7-ROO-LFO	=HACTK7-ROOLFOX+LOC-5D2.
HACTK7CP1-LFOO	=HACTK7CP1LFOOX+LOC-5D2.
HACTK7CP5-LFOO	=HACTK7CP5LFOOX+LOC-5D2.
HACTK8-ROO-LFO	=HACTK8-ROOLFOX+LOC-5D2.
HACTK8CP1-LFOO	=HACTK8CP1LFOOX+LOC-5D2.
HACTK8CP5-LFOO	=HACTK8CP5LFOOX+LOC-5D2.
HACTK9-ROO-LFO	=HACTK9-ROOLFOX+LOC-5D2+2HP089.
HACTK9CP7-LFOO	=HACTK9CP7LFOOX+LOC-5D2.
HAN100A-OOC-FSL	=HAN100A-OOCFSLX.
HAN100A-OOC-LFC	=HAN100A-OOCLFCX+LOC-3E+2HP093.
HAN100B-OOC-FSL	=HAN100B-OOCFSLX.
HAN100B-OOC-LFC	=HAN100B-OOCLFCX+LOC-3E+2HP098.
HC001CB-B-UUM	=HC001CB-BUUMX.
HC001CB-BCO-LF	=HC001CB-BCOLFX+LOC-5D2+2HP010.
HC01CSRT-QOC-LF	=HC01CSRT-QOCLFX+LOC-4C1+2HP092.
HC01K14-ROO-LFO	=HC01K14-ROOLFOX+LOC-5D2+2HP280.

Table E.4 (Continued)

Component to Location and Associated Cable Transformation

Component	Transformation
HC01K14CP1-LFOO	=HC01K14CP1LFOOX+LOC-5D2.
HC01K15CP1-LFOC	=HC01K15CP1LFOCX+LOC-5D2.
HC01K15CP3-LFCO	=HC01K15CP3LFCOX+LOC-5D2.
HCS-RESET-QOC-LF	=HCS-RESET-QOCLFX+LOC-4C1.
HCSC001C-P-UUM	=HCSC001C-PUUMX.
HCSC001C-PMS-CS	=HCSC001C-PMSCSX+LOC-5D2+LOC-4C1+2HP013+2HP141+2HP012+2HP014.
HCSC001C-PMS-LF	=HCSC001C-PMSLFX+LOC-3I2.
HCSC001C-RD001-A	=HCSC001C-RD001AX.
HCSD001X-STR	=HCSD001XSTRX.
HCSF001C-V-UUM	=HCSF001C-VUUMX.
HCSF001C-VOC-CS	=HCSF001C-VOCCSX+LOC-5D2+LOC-4C1+LOC-3I1+2HP019+2HP047 +2HP020+2HP139.
HCSF001C-VOC-LF	=HCSF001C-VOCLFX+LOC-3I1.
HCSF002X-CCC-LF	=HCSF002X-CCCLFX.
HCSF004C-V-UUM	=HCSF004C-VUUMX.
HCSF004C-VCC-CS	=HCSF004C-VCCCSX+LOC-5D2+LOC-4C1+LOC-3E+2HP022+2HP023+2HP048.
HCSF004C-VCC-LF	=HCSF004C-VCCLFX+LOC-3E.
HCSF005X-CCC-LF	=HCSF005X-CCCLFX.
HCSF010C-VCO-CS	=HCSF010C-VCOCSX+LOC-5D2+LOC-4C1+LOC-3H1+2HP049+2HP026 +2HP250+2HP025.
HCSF010C-VCO-LF	=HCSF010C-VCOLFX+LOC-3H1.
HCSF011C-VCO-CS	=HCSF011C-VCOCSX+LOC-5D2+LOC-4C1+LOC-3H1+2HP050+2HP252 +2HP029+2HP030.
HCSF011C-VCO-LF	=HCSF011C-VCOLFX+LOC-3H1.
HCSF015C-V-UUM	=HCSF015C-VUUMX.
HCSF015C-VCC-CS	=HCSF015C-VCCCSX+LOC-5D2+LOC-4C1+LOC-3I1+LOC-3H1+LOC-3H2 +2HP052+2HP255+2HP037+2HP117+2HP036.
HCSF015C-VCC-LF	=HCSF015C-VCCLFX+LOC-3I1.
HCSF016X-CCC-LF	=HCSF016X-CCCLFX.
HCSF023C-VCO-CS	=HCSF023C-VCOCSX+LOC-5D2+LOC-4C1+LOC-3H1+2HP039+2HP053 +2HP040+2HP256.
HCSF023C-VCO-LF	=HCSF023C-VCOLFX+LOC-3H1.
HCSF024X-CCC-LF	=HCSF024X-CCCLFX.
HCSF038X-XOC-LF	=HCSF038X-XOCLFX.
HCSFU011-FUS-LF	=HCSFU011-FUSLFX+LOC-8B1.
HCSN001A-OOO-FSL	=HCSN001A-OOOFSLX.
HCSN001A-OOO-LFO	=HCSN001A-OOOLFOX+LOC-OUTSIDE+2HP081.
HCSN001B-OOO-FSL	=HCSN001B-OOOFSLX.
HCSN001B-OOO-LFO	=HCSN001B-OOOLFOX+LOC-OUTSIDE+2HP082.
HCSPS001-PIP-LFR	=HCSPS001-PIPLFRX.
HCSPS002-PIP-LFR	=HCSPS002-PIPLFRX.
HCSPS003-PIP-LFR	=HCSPS003-PIPLFRX.

Table E.4 (Continued)

Component to Location and Associated Cable Transformation

Component	Transformation
HCSPS004-PIP-LFR	=HCSPS004-PIPLFRX.
HCSPS005-PIP-LFR	=HCSPS005-PIPLFRX.
HCSPS006-PIP-LFR	=HCSPS006-PIPLFRX.
HF001CCB-BCO	=HF001CCBBCOX+LOC-5D2.
HF004CB-B-UUM	=HF004CB-BUUMX.
HF004CB-BCO-LF	=HF004CB-BCOLFX+LOC-5D2+2HP021.
HF015CB-B-UUM	=HF015CB-BUUMX.
HF015CB-BCO-LF	=HF015CB-BCOLFX+LOC-5D2+2HP035.
HF04CSC-QOC-LF	=HF04CSC-QOCLFX+LOC-4C1.
HF100LS-LFCO	=HF100LSLFCOX+LOC-3H1.
HF110LS-LFCO	=HF110LSLFCOX+LOC-3H2.
HF15CSC-LFOC	=HF15CSCLFOCX+LOC-4C1.
HF150LS-LFOC	=HF150LSLFOCX+LOC-3I1.
HIGH-DWPRESSURE	=HIGHDWPRESSUREX.
HPCV01PA-NOC-CC	=HPCV01PA-NOCCCX+LOC-4C1+LOC-4E2-2+LOC-5A3-10+LOC-5A2-1 +2FW110+2FW111+2FW114+2FW115+2FW117+2FW118+2FW121+2FW122 +2FW123+2FW163+2FW182+2FW183+2FW186+2FW190+2FW191+2FW240 +2FW241+2FW242+2FW330+2FW331+2FW332+2FW333+2FW334+2FW335 +2FW337+2FW338+2FW339+2FW350+2FW353+2FW360+2FW363.
HPCV01PA-NOC-LF	=HPCV01PA-NOCLFX+LOC-5A2-1.
HPCV01PB-NOC-CC	=HPCV01PB-NOCCCX+LOC-4C1+LOC-4E2-2+LOC-5A2-2+LOC-5A3-10 +2FW126+2FW127+2FW130+2FW131+2FW133+2FW134+2FW137+2FW138 +2FW139+2FW164+2FW184+2FW185+2FW187+2FW192+2FW193+2FW245 +2FW246+2FW340+2FW341+2FW342+2FW343+2FW344+2FW345+2FW347 +2FW348+2FW349+2FW354+2FW358+2FW361+2FW363.
HPCV01PB-NOC-LF	=HPCV01PB-NOCLFX+LOC-5A2-2.
IAS001AX-XOC-LF	=IAS001AX-XOCLFX.
IAS001BX-XOC-LF	=IAS001BX-XOCLFX.
IAS001CX-XOC-LF	=IAS001CX-XOCLFX.
IAS002AX-XOC-LF	=IAS002AX-XOCLFX.
IAS002BX-XOC-LF	=IAS002BX-XOCLFX.
IAS002CX-XOC-LF	=IAS002CX-XOCLFX.
IAS003AX-COC-LF	=IAS003AX-COCLFX.
IAS003BX-COC-LF	=IAS003BX-COCLFX.
IAS003CX-COC-LF	=IAS003CX-COCLFX.
IAS004AX-NOC-LF	=IAS004AX-NOCLFX+LOC-5C11.
IAS004BX-NOC-LF	=IAS004BX-NOCLFX+LOC-5C11.
IAS004CX-NOC-LF	=IAS004CX-NOCLFX+LOC-5C11.
IAS008CX-COC-LF	=IAS008CX-COCLFX.
IAS009AX-XOC-LF	=IAS009AX-XOCLFX.
IAS009BX-XOC-LF	=IAS009BX-XOCLFX.
IAS009CX-XOC-LF	=IAS009CX-XOCLFX.

Table E.4 (Continued)

Component to Location and Associated Cable Transformation

Component	Transformation
IAS010AX-XOC-LF	=IAS010AX-XOCLFX.
IAS010BX-XOC-LF	=IAS010BX-XOCLFX.
IAS011AX-COC-LF	=IAS011AX-COCLFX.
IAS011BX-COC-LF	=IAS011BX-COCLFX.
IAS011CX-XOC-LF	=IAS011CX-XOCLFX.
IAS012AX-RCO-LFM	=IAS012AX-RCOLFMX.
IAS012BX-RCO-LFM	=IAS012BX-RCOLFMX.
IAS012CX-RCO-LFM	=IAS012CX-RCOLFMX.
IAS012X-XOC-LF	=IAS012X-XOCLFX.
IAS017CX-RCO-LFM	=IAS017CX-RCOLFMX.
IAS01CAX-EMS-CC	=IAS01CAX-EMSCCX+LOC-5C11+LOC-4C1+LOC-5C11-10+1SA012+1SA011 +1SA015+1SA017+1SA038+1SA036+1SA050+1SA051+1SA037+1SA035.
IAS01CAX-EMS-LF	=IAS01CAX-EMSLFX+LOC-5C11.
IAS01CBA-EMS-CC	=IAS01CBA-EMSCCX+LOC-5C11+LOC-5C11-4+LOC-4C1+2SA012+2SA011 +2SA015+2SA051+2SA036+2SA037+2SA038+2SA050.
IAS01CBA-EMS-LF	=IAS01CBA-EMSLFX+LOC-5C11.
IAS01CBA-HTX-LFR	=IAS01CBA-HTXLFRX.
IAS01CCX-EMS-CC	=IAS01CCX-EMSCCX+LOC-5C11+LOC-4C1+LOC-5B13-1+1SA014+1SA031 +1SA032+1SA040+1SA041+1SA042+1SA049+1SA024+1SA043+1SA016.
IAS01CCX-EMS-LF	=IAS01CCX-EMSLFX+LOC-5C11.
IAS01DAX-TNK-LF	=IAS01DAX-TNKLFX.
IAS01DBX-TNK-LF	=IAS01DBX-TNKLFX.
IAS01DCX-TNK-LF	=IAS01DCX-TNKLFX.
IAS020AX-XOC-LF	=IAS020AX-XOCLFX.
IAS020BX-XOC-LF	=IAS020BX-XOCLFX.
IAS029AX-COC-LF	=IAS029AX-COCLFX.
IAS029BX-COC-LF	=IAS029BX-COCLFX.
IAS029CX-COC-LF	=IAS029CX-COCLFX.
IAS029DX-COC-LF	=IAS029DX-COCLFX.
IAS02DAX-DOC-LF	=IAS02DAX-DOCLFX+LOC-6D.
IAS02DBX-DOC-LF	=IAS02DBX-DOCLFX+LOC-6D.
IAS02DCX-DOC-LF	=IAS02DCX-DOCLFX+LOC-6D.
IAS032CX-XOC-LF	=IAS032CX-XOCLFX.
IAS053AX-RCO-LFM	=IAS053AX-RCOLFMX.
IAS053BX-RCO-LFM	=IAS053BX-RCOLFMX.
IAS05MCX-FAC-LF	=IAS05MCX-FACLFX.
IAS062BX-XOC-LF	=IAS062BX-XOCLFX.
IAS065AX-XOC-LF	=IAS065AX-XOCLFX.
IAS06MAX-FAC-LF	=IAS06MAX-FACLFX.
IAS06MBX-FAC-LF	=IAS06MBX-FACLFX.
IAS101DX-TNK-LF	=IAS101DX-TNKLFX.
IAS1054X-RCO-LFM	=IAS1054X-RCOLFMX.

Table E.4 (Continued)

Component to Location and Associated Cable Transformation

Component	Transformation
IAS121X-XOC-LF	=IAS121X-XOCLFX.
IAS201DX-TNK-LF	=IAS201DX-TNKLFX.
IAS2054X-RCO-LFM	=IAS2054X-RCOLFMX.
IAS999AX-XOC-LF	=IAS999AX-XOCLFX.
IAS999BX-XOC-LF	=IAS999BX-XOCLFX.
IASA009X-XOC-LF	=IASA009X-XOCLFX.
IASA010X-XOC-LF	=IASA010X-XOCLFX.
IASB15AA-BCO	=IASB15AABCOX+LOC-5C11-4+2SA010.
IASPSIA0-PIP-LFR	=IASPSIA0-PIPLFRX.
IASPSIA6-PIP-LFR	=IASPSIA6-PIPLFRX.
IASPSIA7-PIP-LFR	=IASPSIA7-PIPLFRX.
IASPSIA8-PIP-LFR	=IASPSIA8-PIPLFRX.
K7022AA1-OCO-LFO	=K7022AA1-OCOLFOX+LOC-4C1+LOC-3K+2RP070.
K7022BB1-OCO-LFO	=K7022BB1-OCOLFOX+LOC-4C1+LOC-3K+2RP071.
K7022CA2-OCO-LFO	=K7022CA2-OCOLFOX+LOC-4C1+LOC-3K+2RP072.
K7022DB2-OCO-LFO	=K7022DB2-OCOLFOX+LOC-4C1+LOC-3K+2RP073.
K7322AA1-OCO-LFO	=K7322AA1-OCOLFOX+LOC-4C1+LOC-3K+2RP070.
K7322BB1-OCO-LFO	=K7322BB1-OCOLFOX+LOC-4C1+LOC-3K+2RP071.
K7322CA2-OCO-LFO	=K7322CA2-OCOLFOX+LOC-4C1+LOC-3K+2RP072.
K7322DB2-OCO-LFO	=K7322DB2-OCOLFOX+LOC-4C1+LOC-3K+2RP073.
LA109ARC-ROO-LFO	=LA109ARC-ROOLFOX+LOC-4E2-2.
LA109BRC-ROO-LFO	=LA109BRC-ROOLFOX+LOC-4E2-1.
LA42ALSX-LCO-LFO	=LA42ALSX-LCOLFOX+LOC-3G-1+2RH440.
LA42BLSX-LCO-LFO	=LA42BLSX-LCOLFOX+LOC-3G-1+2RH432.
LAF15X-FUS-LFO	=LAF15X-FUSLFOX+LOC-4E2-1.
LAF16X-FUS-LFO	=LAF16X-FUSLFOX+LOC-4E2-2.
LAF34X-FUS-LFO	=LAF34X-FUSLFOX+LOC-4E2-1.
LAF35X-FUS-LFO	=LAF35X-FUSLFOX+LOC-4E2-2.
LAF6AX-FUS-LFO	=LAF6AX-FUSLFOX+LOC-4C1.
LAF6BX-FUS-LFO	=LAF6BX-FUSLFOX+LOC-4C1.
LAF6CX-FUS-LFO	=LAF6CX-FUSLFOX+LOC-4C1.
LAF6DX-FUS-LFO	=LAF6DX-FUSLFOX+LOC-4C1.
LAF8AX-FUS-LFO	=LAF8AX-FUSLFOX+LOC-4E2-1.
LAF8BX-FUS-LFO	=LAF8BX-FUSLFOX+LOC-4E2-2.
LAK105AA-ROO-LFO	=LAK105AA-ROOLFOX+LOC-4E2-2+2RH275.
LAK105AACP1-LFOO	=LAK105AACP1LFOOX+LOC-4E2-2.
LAK105BB-ROO-LFO	=LAK105BB-ROOLFOX+LOC-4E2-1+2RH255.
LAK105BBCP1-LFOO	=LAK105BBCP1LFOOX+LOC-4E2-1.
LAK105CB-ROO-LFO	=LAK105CB-ROOLFOX+LOC-4E2-1+2RH256.
LAK105CBCP1-LFOO	=LAK105CBCP1LFOOX+LOC-4E2-1.
LAK109ARCP1-LFOO	=LAK109ARCP1LFOOX+LOC-4E2-2.
LAK109ARCP3-LFOO	=LAK109ARCP3LFOOX+LOC-4E2-2.

Table E.4 (Continued)

Component to Location and Associated Cable Transformation

Component	Transformation
LAK109BRCP1-LFOO	=LAK109BRCP1LFOOX+LOC-4E2-1.
LAK109BRCP3-LFOO	=LAK109BRCP3LFOOX+LOC-4E2-1.
LAK10ACP3-LFOO	=LAK10ACP3LFOOX+LOC-4E2-2.
LAK10ACP7-LFOO	=LAK10ACP7LFOOX+LOC-4E2-2.
LAK10ACP9-LFOC	=LAK10ACP9LFOCX+LOC-4E2-2.
LAK10ACP9-LFOO	=LAK10ACP9LFOOX+LOC-4E2-2.
LAK10BB-ROO-LFO	=LAK10BB-ROOLFOX+LOC-4E2-1+2RH255.
LAK10BBCP1-LFOO	=LAK10BBCP1LFOOX+LOC-4E2-1.
LAK10BBCP2-LFOO	=LAK10BBCP2LFOOX+LOC-4E2-1.
LAK10RCA-ROO-LFO	=LAK10RCA-ROOLFOX+LOC-4E2-2+2LP033.
LAK14ARC-RCO-LFO	=LAK14ARC-RCOLFOX+LOC-4E2-2+2RH440.
LAK14ARCCP1-LFCO	=LAK14ARCCP1LFCOX+LOC-4E2-2.
LAK14ARCCP3-LFCO	=LAK14ARCCP3LFCOX+LOC-4E2-2.
LAK14BRC-RCO-LFO	=LAK14BRC-RCOLFOX+LOC-4E2-1+2RH432.
LAK14BRCCP1-LFCO	=LAK14BRCCP1LFCOX+LOC-4E2-1.
LAK14BRCCP3-LFCO	=LAK14BRCCP3LFCOX+LOC-4E2-1+2RH432.
LAK18ACP1-LFOO	=LAK18ACP1LFOOX+LOC-4E2-2.
LAK18ARA-ROO-LFO	=LAK18ARA-ROOLFOX+LOC-4E2-2.
LAK18ARC-ROO-LFO	=LAK18ARC-ROOLFOX+LOC-7B3.
LAK18BCP1-LFOO	=LAK18BCP1LFOOX+LOC-4E2-1.
LAK18BRB-ROO-LFO	=LAK18BRB-ROOLFOX+LOC-4E2-1.
LAK19AACP1-LFOC	=LAK19AACP1LFOCX+LOC-4E2-2.
LAK19BBCP1-LFOC	=LAK19BBCP1LFOCX+LOC-4E2-1.
LAK21BCP1-LFOO	=LAK21BCP1LFOOX+LOC-4E2-1.
LAK21BRB-ROO-LFO	=LAK21BRB-ROOLFOX+LOC-4E2-1.
LAK23AACP1-LFOO	=LAK23AACP1LFOOX+LOC-4E2-2.
LAK23ARC-ROO-LFO	=LAK23ARC-ROOLFOX+LOC-4E2-2.
LAK23BBCP1-LFOO	=LAK23BBCP1LFOOX+LOC-4E2-1.
LAK23BRC-ROO-LFO	=LAK23BRC-ROOLFOX+LOC-4E2-1.
LAK24ACP3-LFCO	=LAK24ACP3LFCOX+LOC-4E2-2.
LAK24BCP3-LFCO	=LAK24BCP3LFCOX+LOC-4E2-1.
LAK25CBR-ROO-LFO	=LAK25CBR-ROOLFOX+LOC-4E2-1.
LAK25XCP1-LFOO	=LAK25XCP1LFOOX+LOC-4E2-1.
LAK26CBCP3-LFCO	=LAK26CBCP3LFCOX+LOC-4E2-1.
LAK27XCP4-LFCO	=LAK27XCP4LFCOX+LOC-4E2-1.
LAK28ACXCP4-LFCO	=LAK28ACXCP4LFCOX+LOC-4E2-2.
LAK28BXCP4-LFCO	=LAK28BXCP4LFCOX+LOC-4E2-1.
LAK29RCXCP5-LFOO	=LAK29RCXCP5LFOOX+LOC-4E2-1.
LAK2ARCA-RCO-LFO	=LAK2ARCA-RCOLFOX+LOC-4E2-2+2RH281.
LAK2ARCXCP1-LFCO	=LAK2ARCXCP1LFCOX+LOC-4E2-2.
LAK2BRCB-RCO-LFO	=LAK2BRCB-RCOLFOX+LOC-4E2-1+2RH424.
LAK2BRCXCP1-LFCO	=LAK2BRCXCP1LFCOX+LOC-4E2-1.

Table E.4 (Continued)

Component to Location and Associated Cable Transformation

Component	Transformation
LAK2RCA-ROO-LFO	=LAK2RCA-ROOLFOX+LOC-4E2-2+2LP037.
LAK2RCACP1-LFOO	=LAK2RCACP1LFOOX+LOC-4E2-2.
LAK30RCX-ROO-LFO	=LAK30RCX-ROOLFOX+LOC-4E2-2+2PC086+2PC087.
LAK30RCXCP5-LFOO	=LAK30RCXCP5LFOOX+LOC-4E2-2.
LAK3ARCA-RCO-LFO	=LAK3ARCA-RCOLFOX+LOC-4E2-2+2RH435.
LAK3ARCACP5-LFCO	=LAK3ARCACP5LFCOX+LOC-4E2-2.
LAK3ARCXCP1-LFCO	=LAK3ARCXCP1LFCOX+LOC-4E2-2.
LAK3BRCB-RCO-LFO	=LAK3BRCB-RCOLFOX+LOC-4E2-1+2RH425.
LAK3BRCBCP3-LFCO	=LAK3BRCBCP3LFCOX+LOC-4E2-1.
LAK3BRCBCP5-LFCO	=LAK3BRCBCP5LFCOX+LOC-4E2-1.
LAK3BRCBCP7-LFCO	=LAK3BRCBCP7LFCOX+LOC-4E2-1.
LAK3BRCXCP1-LFCO	=LAK3BRCXCP1LFCOX+LOC-4E2-1.
LAK3RCA-ROO-LFO	=LAK3RCA-ROOLFOX+LOC-4E2-2+2LP037.
LAK3RCACP1-LFOO	=LAK3RCACP1LFOOX+LOC-4E2-2.
LAK4ARCXCP1-LFCO	=LAK4ARCXCP1LFCOX+LOC-4C1.
LAK4BRCXCP1-LFCO	=LAK4BRCXCP1LFCOX+LOC-4C1.
LAK4BRCXCP4-LFOC	=LAK4BRCXCP4LFOCX+LOC-4C1.
LAK4RCA-ROO-LFO	=LAK4RCA-ROOLFOX+LOC-4E2-2+2LP036.
LAK4RCACP1-LFOO	=LAK4RCACP1LFOOX+LOC-4E2-2.
LAK4RCACP5-LFOO	=LAK4RCACP5LFOOX+LOC-4E2-2.
LAK4RCACP7-LFOC	=LAK4RCACP7LFOCX+LOC-4E2-2.
LAK58ARC-ROO-LFO	=LAK58ARC-ROOLFOX+LOC-4E2-2.
LAK58ARXCP1-LFOO	=LAK58ARXCP1LFOOX+LOC-4E2-2.
LAK58ARXCP3-LFOO	=LAK58ARXCP3LFOOX+LOC-4E2-2.
LAK58BRC-ROO-LFO	=LAK58BRC-ROOLFOX+LOC-4E2-1.
LAK58BRXCP1-LFOO	=LAK58BRXCP1LFOOX+LOC-4E2-1.
LAK58BRXCP3-LFOO	=LAK58BRXCP3LFOOX+LOC-4E2-1.
LAK5RCA-ROO-LFO	=LAK5RCA-ROOLFOX+LOC-4E2-2+2LP036.
LAK5RCACP1-LFOO	=LAK5RCACP1LFOOX+LOC-4E2-2.
LAK5RCACP5-LFOO	=LAK5RCACP5LFOOX+LOC-4E2-2.
LAK5RCACP7-LFOC	=LAK5RCACP7LFOCX+LOC-4E2-2.
LAK5RCAP1-LFOO	=LAK5RCAP1LFOOX+LOC-4E2-2.
LAK5RCB-ROO-LFO	=LAK5RCB-ROOLFOX+LOC-4E2-1+2RH293.
LAK5RCBCP1-LFOO	=LAK5RCBCP1LFOOX+LOC-4E2-1.
LAK5RCBCP3-LFOO	=LAK5RCBCP3LFOOX+LOC-4E2-1.
LAK5RCBCP5-LFOC	=LAK5RCBCP5LFOCX+LOC-4E2-1.
LAK68RCX-ROO-LFO	=LAK68RCX-ROOLFOX+LOC-4E2-1+2PC118.
LAK68RCXCM3-LFOO	=LAK68RCXCM3LFOOX+LOC-4E2-1.
LAK68RXCPM2-LFOO	=LAK68RXCPM2LFOOX+LOC-4E2-1.
LAK69RCX-ROO-LFO	=LAK69RCX-ROOLFOX+LOC-4E2-2+2PC119.
LAK69RCXCM3-LFOO	=LAK69RCXCM3LFOOX+LOC-4E2-2.
LAK69RXCPM2-LFOO	=LAK69RXCPM2LFOOX+LOC-4E2-2.

Table E.4 (Continued)

Component to Location and Associated Cable Transformation

Component	Transformation
LAK6ARCX-RCO-LFO	=LAK6ARCX-RCOLFOX+LOC-4C1.
LAK6ARCXCP7-LFCO	=LAK6ARCXCP7LFCOX+LOC-4C1.
LAK6BRCX-RCO-LFO	=LAK6BRCX-RCOLFOX+LOC-4C1.
LAK6BRCXCP7-LFCO	=LAK6BRCXCP7LFCOX+LOC-4C1.
LAK6CRCX-RCO-LFO	=LAK6CRCX-RCOLFOX+LOC-4C1.
LAK6CRCXCP7-LFCO	=LAK6CRCXCP7LFCOX+LOC-4C1.
LAK6DRCX-RCO-LFO	=LAK6DRCX-RCOLFOX+LOC-4C1.
LAK6DRCXCP7-LFCO	=LAK6DRCXCP7LFCOX+LOC-4C1.
LAK6RCB-ROO-LFO	=LAK6RCB-ROOLFOX+LOC-4E2-1+2RH293.
LAK6RCBCP1-LFOO	=LAK6RCBCP1LFOOX+LOC-4E2-1.
LAK6RCBCP3-LFOO	=LAK6RCBCP3LFOOX+LOC-4E2-1.
LAK6RCBCP5-LFOC	=LAK6RCBCP5LFOCX+LOC-4E2-1.
LAK70ACXCP1-LFOO	=LAK70ACXCP1LFOOX+LOC-4E2-2.
LAK70ARA-ROO-LFO	=LAK70ARA-ROOLFOX+LOC-4E2-2.
LAK70BCXCP1-LFOO	=LAK70BCXCP1LFOOX+LOC-4E2-1.
LAK70BRB-ROO-LFO	=LAK70BRB-ROOLFOX+LOC-4E2-1.
LAK74RCX-ROO-LFO	=LAK74RCX-ROOLFOX+LOC-4E2-2+2PC092+2PC093.
LAK74RCXCM3-LFOO	=LAK74RCXCM3LFOOX+LOC-4E2-2.
LAK74RXCPM2-LFOO	=LAK74RXCPM2LFOOX+LOC-4E2-2.
LAK75RCXCP5-LFOO	=LAK75RCXCP5LFOOX+LOC-4E2-2.
LAK75RCXCP7-LFOO	=LAK75RCXCP7LFOOX+LOC-4E2-2.
LAK77RCX-ROO-LFO	=LAK77RCX-ROOLFOX+LOC-4E2-1+2PC088+2PC089.
LAK77RCXCM3-LFOO	=LAK77RCXCM3LFOOX+LOC-4E2-1.
LAK77RXCPM2-LFOO	=LAK77RXCPM2LFOOX+LOC-4E2-1.
LAK7RCB-ROO-LFO	=LAK7RCB-ROOLFOX+LOC-4E2-1+2RH259.
LAK7RCBCP1-LFOO	=LAK7RCBCP1LFOOX+LOC-4E2-1.
LAK8RCB-ROO-LFO	=LAK8RCB-ROOLFOX+LOC-4E2-1+2RH259.
LAK8RCBCP1-LFOO	=LAK8RCBCP1LFOOX+LOC-4E2-1.
LAK93ACP3-LFCC	=LAK93ACP3LFCCX+LOC-4E2-2.
LAK93ARC-ROO-LFO	=LAK93ARC-ROOLFOX+LOC-4E2-2.
LAK93BCP3-LFCC	=LAK93BCP3LFCCX+LOC-4E2-1.
LAK93BRC-ROO-LFO	=LAK93BRC-ROOLFOX+LOC-4E2-1.
LAK94BCP7-LFOO	=LAK94BCP7LFOOX+LOC-4E2-1.
LAK94BCP9-LFOO	=LAK94BCP9LFOOX+LOC-4E2-1.
LAK94BXCP1-LFOO	=LAK94BXCP1LFOOX+LOC-4E2-1.
LAK95ACP1-LFOC	=LAK95ACP1LFOCX+LOC-4E2-2.
LAK95BCP1-LFOC	=LAK95BCP1LFOCX+LOC-4E2-1.
LAK9ACP1-LFOC	=LAK9ACP1LFOCX+LOC-4E2-2.
LAK9ACP3-LFOO	=LAK9ACP3LFOOX+LOC-4E2-2.
LAK9ACP5-LFOO	=LAK9ACP5LFOOX+LOC-4E2-2.
LAK9ARCA-ROO-LFO	=LAK9ARCA-ROOLFOX+LOC-4E2-2.
LAK9BCP1-LFOC	=LAK9BCP1LFOCX+LOC-4E2-1.

Table E.4 (Continued)

Component to Location and Associated Cable Transformation

Component	Transformation
LAK9BCP3-LFOO	=LAK9BCP3LFOOX+LOC-4E2-1.
LAK9BRCB-ROO-LFO	=LAK9BRCB-ROOLFOX+LOC-4E2-1.
LAKS10ACP3-LFOC	=LAKS10ACP3LFOCX+LOC-4C1.
LAKS10BCP3-LFOC	=LAKS10BCP3LFOCX+LOC-4C1.
LAKS10CCP3-LFOC	=LAKS10CCP3LFOCX+LOC-4C1.
LAKS3AXCP2-LFOC	=LAKS3AXCP2LFOCX+LOC-4C1.
LAKS3BXCP2-LFOC	=LAKS3BXCP2LFOCX+LOC-4C1.
LAS12AX-CSO-LFO	=LAS12AX-CSOLFOX+LOC-4C1.
LAS12BX-CSO-LFO	=LAS12BX-CSOLFOX+LOC-4C1.
LAS32X-QOO-LFO	=LAS32X-QOOLFOX+LOC-4C1+2PC118.
LAS33X-QOO-LFO	=LAS33X-QOOLFOX+LOC-4C1+2PC119.
LAS3CXCP2-LFOC	=LAS3CXCP2LFOCX+LOC-4C1.
LAS43AX-QCO-LFO	=LAS43AX-QCOLFOX+LOC-4E2-2.
LAS43BX-QCO-LFO	=LAS43BX-QCOLFOX+LOC-4E2-1.
LAS44AX-QCO-LFO	=LAS44AX-QCOLFOX+LOC-4E2-2.
LAS44BX-QCO-LFO	=LAS44BX-QCOLFOX+LOC-4E2-1.
LAS79AX-QCO-LFO	=LAS79AX-QCOLFOX+LOC-4C1.
LAS79BX-QCO-LFO	=LAS79BX-QCOLFOX+LOC-4C1.
LAS79CX-QCO-LFO	=LAS79CX-QCOLFOX+LOC-4C1.
LAS79DX-QCO-LFO	=LAS79DX-QCOLFOX+LOC-4C1.
LAVF4AX-LSC-LFC	=LAVF4AX-LSCLFCX+LOC-3G-1+2RH439.
LAVF4BX-LSC-LFC	=LAVF4BX-LSCLFCX+LOC-3G-1+2RH431.
LCA12XRC-ROO-LFO	=LCA12XRC-ROOLFOX+LOC-7B3.
LCI012A7-PIP-LFR	=LCI012A7-PIPLFRX.
LCI012B7-PIP-LFR	=LCI012B7-PIPLFRX.
LCI012C2-PIP-LFR	=LCI012C2-PIPLFRX.
LCI018C1-PIP-LFR	=LCI018C1-PIPLFRX.
LCI301CX-STR	=LCI301CXSTRX.
LCIB01AX-B-UUM	=LCIB01AX-BUUMX.
LCIB01AX-BCO-LF	=LCIB01AX-BCOLFX+LOC-3G-1+2RH150.
LCIB01BX-B-UUM	=LCIB01BX-BUUMX.
LCIB01BX-BCO-LF	=LCIB01BX-BCOLFX+LOC-3G-1+2RH154.
LCIB01CX-B-UUM	=LCIB01CX-BUUMX.
LCIB01CX-BCO-LF	=LCIB01CX-BCOLFX+LOC-3F-2+2RH158.
LCIB02CB-B-UUM	=LCIB02CB-BUUMX.
LCIB02CB-BOO-CC	=LCIB02CB-BOOCCX+LOC-4E4+LOC-4E2-1+LOC-4C1+2RH025+2RH416 +2RH026.
LCIB02CB-BOO-LF	=LCIB02CB-BOOLFX+LOC-4E4+2RH022.
LCIC02CB-P-NDUUM	=LCIC02CB-PNDUUMX.
LCIC02CB-P-UUM	=LCIC02CB-PUUMX.
LCIC02CB-PMS-LF	=LCIC02CB-PMSLFX+LOC-3I3.
LCIC02CB-RUM-1	=LCIC02CB-RUM1X.

Table E.4 (Continued)

Component to Location and Associated Cable Transformation

Component	Transformation
LCIF04CB-VOC-CC	=LCIF04CB-VOCCCX+LOC-3F-2+LOC-4C1+LOC-3I1+2RH037+2RH039.
LCIF04CB-VOC-LF	=LCIF04CB-VOCLFX+LOC-3I1.
LCIF21CB-VCO-CC	=LCIF21CB-VCOCCX+LOC-3G-1+LOC-4E2-1+LOC-4C1+LOC-3F-1+2RH215 +2RH216+2RH217.
LCIF21CB-VCO-LF	=LCIF21CB-VCOLFX+LOC-3F-1.
LCIF31CX-CCC-LF	=LCIF31CX-CCCLFX.
LCIF41AX-CCC-LF	=LCIF41AX-CCCLFX.
LCIF41BX-CCC-LF	=LCIF41BX-CCCLFX.
LCIF41CX-CCC-LF	=LCIF41CX-CCCLFX.
LCIF42AA-V-UUM	=LCIF42AA-VUUMX.
LCIF42AA-VCC-CC	=LCIF42AA-VCCCCX+LOC-3G-1+LOC-4C1+LOC-4E2-2+LOC-3E+2RH151 +2RH152+2RH153.
LCIF42AA-VCC-LF	=LCIF42AA-VCCLFX+LOC-3E.
LCIF42AA-VCO-CC	=LCIF42AA-VCOCCX+LOC-3E+LOC-4C1+LOC-4E2-2+LOC-3G-1+2RH151 +2RH152+2RH153.
LCIF42AA-VCO-LF	=LCIF42AA-VCOLFX+LOC-3E.
LCIF42BB-V-UUM	=LCIF42BB-VUUMX.
LCIF42BB-VCC-CC	=LCIF42BB-VCCCCX+LOC-3G-1+LOC-4C1+LOC-4E2-1+LOC-3E+2RH155 +2RH376+2RH156+2RH157.
LCIF42BB-VCC-LF	=LCIF42BB-VCCLFX+LOC-3E.
LCIF42BB-VCO-CC	=LCIF42BB-VCOCCX+LOC-3E+LOC-4E2-1+LOC-4C1+LOC-3G-1+2RH155 +2RH376+2RH156+2RH157.
LCIF42BB-VCO-LF	=LCIF42BB-VCOLFX+LOC-3E.
LCIF42CB-V-UUM	=LCIF42CB-VUUMX.
LCIF42CB-VCC-CC	=LCIF42CB-VCCCCX+LOC-3F-2+LOC-4C1+LOC-4E2-1+LOC-3E+2RH159 +2RH160+2RH161.
LCIF42CB-VCC-LF	=LCIF42CB-VCCLFX+LOC-3E.
LCIF64CB-RUM-1	=LCIF64CB-RUM1X.
LCIF64CB-V-UUM	=LCIF64CB-VUUMX.
LCIF88CX-R-UUM	=LCIF88CX-RUUMX.
LCIF88CX-RUM-1	=LCIF88CX-RUM1X.
LCIF92AX-XOC-LF	=LCIF92AX-XOCLFX.
LCIF92BX-XOC-LF	=LCIF92BX-XOCLFX.
LCIF92CX-XOC-LF	=LCIF92CX-XOCLFX.
LCIF98CX-XOC-LF	=LCIF98CX-XOCLFX.
LCIFUC1X-FUS-LF	=LCIFUC1X-FUSLFX+LOC-4E4.
LCIFUC2X-FUS-LF	=LCIFUC2X-FUSLFX+LOC-4E4.
LCIV4CXX-LSC-LFC	=LCIV4CXX-LSCLFCX+LOC-3F-2.
LCS012S2-PIP-LFR	=LCS012S2-PIPLFRX.
LCS024S1-PIP-LFR	=LCS024S1-PIPLFRX.
LCSA12CXCP5-LFOO	=LCSA12CXCP5LFOOX+LOC-7B3.
LCSA12XCP2-LFOO	=LCSA12XCP2LFOOX+LOC-7B3.

Table E.4 (Continued)

Component to Location and Associated Cable Transformation

Component	Transformation
LCSB001X-B-UUM	=LCSB001X-BUUMX.
LCSB001X-BCO-LF	=LCSB001X-BCOLFX+LOC-3G-1+2LP022.
LCSB002A-B-UUM	=LCSB002A-BUUMX.
LCSB002A-BOO-CC	=LCSB002A-BOOCCX+LOC-4F2+LOC-4C1+LOC-4E2-2+LOC-7B3+2LP012 +2LP013+2LP041+2LP086.
LCSB002A-BOO-LF	=LCSB002A-BOOLFX+LOC-4F2+2LP010.
LCSC001A-P-UUM	=LCSC001A-PUUMX.
LCSC001A-PMS-LF	=LCSC001A-PMSLFX+LOC-3I4.
LCSC002A-P-UUM	=LCSC002A-PUUMX.
LCSC002A-P-UUM	=LCSC002A-PUUMX.
LCSC002A-RUM-1	=LCSC002A-RUM1X.
LCSD302X-STR	=LCSD302XSTRX.
LCSF001A-VOC-CC	=LCSF001A-VOCCCX+LOC-3G-1+LOC-4C1+LOC-3I1+2LP023+2LP021 +2LP061+2LP060+2LP020.
LCSF001A-VOC-LF	=LCSF001A-VOCLFX+LOC-3I1.
LCSF003X-CCC-LF	=LCSF003X-CCCLFX.
LCSF005A-V-UUM	=LCSF005A-VUUMX.
LCSF005A-VCC-CC	=LCSF005A-VCCCCX+LOC-3G-1+LOC-4C1+LOC-4E2-2+LOC-3E+2LP023 +2LP024+2LP025.
LCSF005A-VCC-LF	=LCSF005A-VCCLFX+LOC-3E.
LCSF006X-CCC-LF	=LCSF006X-CCCLFX.
LCSF012A-VCO-CC	=LCSF012A-VCOCCX+LOC-3G-1+LOC-4C1+LOC-4E2-2+LOC-3G-1+2LP027 +2LP029+2LP028.
LCSF012A-VCO-LF	=LCSF012A-VCOLFX+LOC-3G-1.
LCSF051X-XOC-LF	=LCSF051X-XOCLFX.
LCSFUP1X-FUS-LF	=LCSFUP1X-FUSLFX+LOC-4F2.
LCSFUP2X-FUS-LF	=LCSFUP2X-FUSLFX+LOC-4F2.
LCSGCP2-LFOC	=LCSGCP2LFOCX+LOC-4C1.
LCSK12ACP1-LFOO	=LCSK12ACP1LFOOX+LOC-4E2-2.
LCSK12AR-ROO-LFO	=LCSK12AR-ROOLFOX+LOC-4E2-2+2LP033.
LCSK12CXCP2-LFOO	=LCSK12CXCP2LFOOX+LOC-4E2-2.
LCSK13ACP4-LFCO	=LCSK13ACP4LFCOX+LOC-4E2-2.
LCSK14ACP1-LFOO	=LCSK14ACP1LFOOX+LOC-4E2-2.
LCSK1ACP1-LFCO	=LCSK1ACP1LFCOX+LOC-4E2-2.
LCSK1ACP8-LFOO	=LCSK1ACP8LFOOX+LOC-4E2-2.
LCSK1ARC-RCO-LFO	=LCSK1ARC-RCOLFOX+LOC-4E2-2+2LP035.
LCSS13X-QCO-LFO	=LCSS13X-QCOLFOX+LOC-4E2-2.
LDSA235A-TFM-LF	=LDSA235A-TFMLFX+LOC-4F2.
LDSAF2AA-FUS-LF	=LDSAF2AA-FUSLFX+LOC-4C1.
LDSAK3AA-LFO	=LDSAK3AALFOX+LOC-4C1.
LDSAK3AA-R-TTPR1	=LDSAK3AA-RTTPR1X.
LDSAK3AAK7A-LFCO	=LDSAK3AAK7ALFCOX+LOC-4C1.

Table E.4 (Continued)

Component to Location and Associated Cable Transformation

Component	Transformation
LDSAK3CA-LFO	=LDSAK3CALFOX+LOC-4C1.
LDSAK3CA-R-TTPR1	=LDSAK3CA-RTTPR1X.
LDSAK3CAK7C-LFCO	=LDSAK3CAK7CLFCOX+LOC-4C1.
LDSB236B-TFM-LF	=LDSB236B-TFMLFX+LOC-4E4.
LDSBF2BB-FUS-LF	=LDSBF2BB-FUSLFX+LOC-4C1.
LDSBK3BB-LFO	=LDSBK3BBLFOX+LOC-4C1.
LDSBK3BB-R-TTPR1	=LDSBK3BB-RTTPR1X.
LDSBK3BBK7B-LFCO	=LDSBK3BBK7BLFCOX+LOC-4C1.
LDSBK3DB-LFO	=LDSBK3DBLFOX+LOC-4C1.
LDSBK3DB-R-TTPR1	=LDSBK3DB-RTTPR1X.
LDSBK3DBK7D-LFCO	=LDSBK3DBK7DLFCOX+LOC-4C1.
LDSK91AA-LFO	=LDSK91AALFOX+LOC-4C1.
LDSK9AAK3A-LFCO	=LDSK9AAK3ALFCOX+LOC-4C1.
LDSK9AAK3C-LFCO	=LDSK9AAK3CLFCOX+LOC-4C1.
LDSK9BB-LFO	=LDSK9BBLFOX+LOC-4C1.
LDSK9BBK3B-LFCO	=LDSK9BBK3BLFCOX+LOC-4C1.
LDSK9BBK3D-LFCO	=LDSK9BBK3DLFCOX+LOC-4C1.
LF42ALSX-LSO-LFO	=LF42ALSX-LSOLFOX+LOC-4F2.
LF42BLSX-LSO-LFO	=LF42BLSX-LSOLFOX+LOC-3G-1.
LF5K14AR-ROO-LFO	=LF5K14AR-ROOLFOX+LOC-4E2-2+2LP033.
LF5K15ACP4-LFCO	=LF5K15ACP4LFCOX+LOC-4E2-2.
LF5K20ACP1-LFOO	=LF5K20ACP1LFOOX+LOC-4E2-2.
LF5K20ACP2-LFOO	=LF5K20ACP2LFOOX+LOC-4E2-2.
LF5K20AR-ROO-LFO	=LF5K20AR-ROOLFOX+LOC-4E2-2+2LP040.
LF5K8ACP1-LFOO	=LF5K8ACP1LFOOX+LOC-4E2-2.
LF5K8AR-ROO-LFO	=LF5K8AR-ROOLFOX+LOC-4E2-2+2LP040.
LF5S2XCP4-LFOC	=LF5S2XCP4LFOCX+LOC-4C1.
LICCD026-ASL-FSL	=LICCD026-ASLFSLX.
LICCD026-CAL-LFO	=LICCD026-CALLFOX+LOC-5D4+2CD085.
LICCD028-ASL-FSL	=LICCD028-ASLFSLX.
LICCD028-CAL-LFO	=LICCD028-CALLFOX+LOC-5D4+2CD085.
LK109ARCCP7-LFCO	=LK109ARCCP7LFCOX+LOC-4E2-2.
LK109BRCCP7-LFCO	=LK109BRCCP7LFCOX+LOC-4E2-1.
LK10ARCX-RCO-LFO	=LK10ARCX-RCOLFOX+LOC-4C1.
LK10ARCXCM1-LFCO	=LK10ARCXCM1LFCOX+LOC-4C1.
LK10BRCX-RCO-LFO	=LK10BRCX-RCOLFOX+LOC-4C1.
LK10BRCXCM1-LFCO	=LK10BRCXCM1LFCOX+LOC-4C1.
LK29RCX-ROO-LFO	=LK29RCX-ROOLFOX+LOC-4E2-1+2PC083+2PC084.
LK29RCXCP1-LFOO	=LK29RCXCP1LFOOX+LOC-4E2-1.
LK4ARCX-RCO-LFO	=LK4ARCX-RCOLFOX+LOC-4C1.
LK4BRCX-RCO-LFO	=LK4BRCX-RCOLFOX+LOC-4C1+2RI175.
LK59ARCCP1-LFOO	=LK59ARCCP1LFOOX+LOC-4E2-2.

Table E.4 (Continued)

Component to Location and Associated Cable Transformation

Component	Transformation
LK59ARCX-ROO-LFO	=LK59ARCX-ROOLFOX+LOC-4E2-2.
LK59BRCCP1-LFOO	=LK59BRCCP1LFOOX+LOC-4E2-1.
LK59BRCX-ROO-LFO	=LK59BRCX-ROOLFOX+LOC-4E2-1.
LK75RCX-ROO-LFO	=LK75RCX-ROOLFOX+LOC-4E2-2+2PC086+2PC087.
LK75RCXCP1-LFOO	=LK75RCXCP1LFOOX+LOC-4E2-2.
LLOCA-IE	=LLOCAIEX.
LOSP-IE	=LOSPIEX.
LPCI-CM	=LPCICMX.
LPSFU1X-FUS-LF	=LPSFU1X-FUSLFX+LOC-4E2-2.
LPSFU2X-FUS-LF	=LPSFU2X-FUSLFX+LOC-4E2-2.
MC-TCW01PAD-TRS	=MC-TCW01PADTRSX.
MC-TCW01PBE-TRS	=MC-TCW01PBETRSX.
MFS-RESET-OE	=MFS-RESETOEX+LOC-4C1.
MFW0001F-PIP-LFR	=MFW0001F-PIPLFRX.
MFW0002F-PIP-LFR	=MFW0002F-PIPLFRX.
MFW0002X-CCC-LF	=MFW0002X-CCCLFX.
MFW0003F-PIP-LFR	=MFW0003F-PIPLFRX.
MFW0003X-XOC-LF	=MFW0003X-XOCLFX.
MFW0004X-XOC-LF	=MFW0004X-XOCLFX.
MFW0005X-N-UUM	=MFW0005X-NUUMX.
MFW0005X-NCC-LF	=MFW0005X-NCCLFX+LOC-5B2.
MFW0018A-VCO-CC	=MFW0018A-VCOCCX+LOC-4C1+LOC-5C11-4+LOC-5C10+2FW215+2FW210 +2FW217.
MFW0018A-VCO-LF	=MFW0018A-VCOLFX+LOC-5C10.
MFW001AX-COC-LF	=MFW001AX-COCLFX.
MFW001BX-COC-LF	=MFW001BX-COCLFX.
MFW0022D-V-OE-O	=MFW0022D-V-OEOX+LOC-4C1.
MFW0022D-VCC-CC	=MFW0022D-VCCCCX+LOC-5A3-10+LOC-4C1+LOC-5B2+2FW047+2FW046.
MFW0022D-VCC-LF	=MFW0022D-VCCLFX+LOC-5B2.
MFW0023X-CCC-LF	=MFW0023X-CCCLFX.
MFW0026A-VCO-CC	=MFW0026A-VCOCCX+LOC-4C1+LOC-5C11-5+LOC-5C10+2FW218+2FW220.
MFW0026A-VCO-LF	=MFW0026A-VCOLFX+LOC-5C10.
MFW00M1-PIP-LFR	=MFW00M1-PIPLFRX.
MFW010AE-VOC-CC	=MFW010AE-VOCCCX+LOC-4C1+LOC-5C11-4+LOC-5A2-1+2FW016+2FW017.
MFW010AE-VOC-LF	=MFW010AE-VOCLFX+LOC-5A2-1.
MFW010BB-VOC-CC	=MFW010BB-VOCCCX+LOC-4C1+LOC-5C11-4+LOC-5A2-2+2FW021+2FW022.
MFW010BB-VOC-LF	=MFW010BB-VOCLFX+LOC-5A2-2.
MFW014AE-VOC-CC	=MFW014AE-VOCCCX+LOC-4C1+LOC-5C11-4+LOC-5C10+LOC-6D+2FW027 +2FW028.
MFW014AE-VOC-LF	=MFW014AE-VOCLFX+LOC-5C10.
MFW014BB-VOC-CC	=MFW014BB-VOCCCX+LOC-4C1+LOC-5C11-4+LOC-5C10+LOC-6D+2FW035 +2FW036.

Table E.4 (Continued)

Component to Location and Associated Cable Transformation

Component	Transformation
MFW014BB-VOC-LF	=MFW014BB-VOCLFX+LOC-5C10.
MFW015AE-VOC-CC	=MFW015AE-VOCCCX+LOC-4C1+LOC-5C11-4+LOC-5C10+LOC-6D+2FW032 +2FW034.
MFW015AE-VOC-LF	=MFW015AE-VOCLFX+LOC-5C10.
MFW015BB-VOC-CC	=MFW015BB-VOCCCX+LOC-4C1+LOC-5C11-4+LOC-5C10+LOC-6D+2FW039 +2FW042+2FW040.
MFW015BB-VOC-LF	=MFW015BB-VOCLFX+LOC-5C10.
MFW01AAX-HTX-LFB	=MFW01AAX-HTXLFBX.
MFW01ABX-HTX-LFB	=MFW01ABX-HTXLFBX.
MFW01PAX-PTS-LF	=MFW01PAX-PTSLFX+LOC-5A2-1.
MFW01PBX-PTS-LF	=MFW01PBX-PTSLFX+LOC-5A2-2.
MFW01PCE-M-UUM	=MFW01PCE-MUUMX.
MFW01PCE-PMS-LF	=MFW01PCE-PMSLFX+LOC-5B10.
MFWB001E-B-UUM	=MFWB001E-BUUMX.
MFWB001E-BOO-CC	=MFWB001E-BOOCCX+LOC-4C1+LOC-4E2-1+LOC-4E4+2FW013+2FW011 +2FW012+2FW014+2FW234+2FW194+2FW188+2FW281.
MFWB001E-BOO-LF	=MFWB001E-BOOLFX+LOC-4E4+2FW010.
MFWB002D-BCO	=MFWB002DBCOX+LOC-5A3-10+LOC-5B2+2FW048.
MFWB01F1-FUS-LF	=MFWB01F1-FUSLFX+LOC-5A3-10.
MFWB01F6-FUS-LF	=MFWB01F6-FUSLFX+LOC-5A3-10.
MFWF001E-FUS-LF	=MFWF001E-FUSLFX+LOC-4E4.
MFWF10AX-COC-LF	=MFWF10AX-COCLFX.
MFWF10BX-COC-LF	=MFWF10BX-COCLFX.
MFWF11AX-XOC-LF	=MFWF11AX-XOCLFX.
MFWF11BX-XOC-LF	=MFWF11BX-XOCLFX.
MFWF32AX-COC-LF	=MFWF32AX-COCLFX.
MFWF32BX-COC-LF	=MFWF32BX-COCLFX.
MFWF65AA-VOC-CC	=MFWF65AA-VOCCCX+LOC-4C1+LOC-3F-1+LOC-4E2-2+LOC-3K+2NB360 +2NB361+2NB761+2NB220.
MFWF65AA-VOC-LF	=MFWF65AA-VOCLFX+LOC-3K.
MFWF65BA-VOC-CC	=MFWF65BA-VOCCCX+LOC-4C1+LOC-4F2+LOC-4E2-2+LOC-3K+2NB363 +2NB367+2NB376+2NB769.
MFWF65BA-VOC-LF	=MFWF65BA-VOCLFX+LOC-3K.
MLO0001F-PIP-LFR	=MLO0001F-PIPLFRX.
MLO001TC-TNK-LF	=MLO001TC-TNKLFX.
MLO03PCB-M-UUM	=MLO03PCB-MUUMX.
MLO03PCB-PMS-CC	=MLO03PCB-PMSCCX+LOC-4C1+LOC-5B6+LOC-5B10+2FW226+2FW227 +2FW225.
MLO03PCB-PMS-LF	=MLO03PCB-PMSLFX+LOC-5B10.
MLOCA-IE	=MLOCAIEX.
MLOCV1CX-COC-LF	=MLOCV1CX-COCLFX.
MLOCV2CX-COC-LF	=MLOCV2CX-COCLFX.

Table E.4 (Continued)

Component to Location and Associated Cable Transformation

Component	Transformation
MODESWTCH-C-OE-O	=MODESWTCH-C-OEOX+LOC-4C1.
MODSWTCH-QCO-LFO	=MODSWTCH-QCOLFOX+LOC-4C1.
MSIVCS1A-QCO-LFO	=MSIVCS1A-QCOLFOX+LOC-4C1.
MSIVCS1B-QCO-LFO	=MSIVCS1B-QCOLFOX+LOC-4C1.
MSIVCS1C-QCO-LFO	=MSIVCS1C-QCOLFOX+LOC-4C1.
MSIVCS1D-QCO-LFO	=MSIVCS1D-QCOLFOX+LOC-4C1.
MSIVCS2A-QCO-LFO	=MSIVCS2A-QCOLFOX+LOC-4C1.
MSIVCS2B-QCO-LFO	=MSIVCS2B-QCOLFOX+LOC-4C1.
MSIVCS2C-QCO-LFO	=MSIVCS2C-QCOLFOX+LOC-4C1.
MSIVCS2D-QCO-LFO	=MSIVCS2D-QCOLFOX+LOC-4C1.
MSIVK14B-LFO	=MSIVK14BLFOX+LOC-4E2-1+2NB046.
MSIVK14B1A2-LFCO	=MSIVK14B1A2LFCOX+LOC-4E2-1.
MSIVK14B1B2-LFCO	=MSIVK14B1B2LFCOX+LOC-4E2-1.
MSIVK14B1C2-LFCO	=MSIVK14B1C2LFCOX+LOC-4E2-1.
MSIVK14B1D2-LFCO	=MSIVK14B1D2LFCOX+LOC-4E2-1.
MSIVK16A-LFO	=MSIVK16ALFOX+LOC-4E2-2+2NB074.
MSIVK16A2A2-LFCO	=MSIVK16A2A2LFCOX+LOC-4E2-2.
MSIVK16A2B2-LFCO	=MSIVK16A2B2LFCOX+LOC-4E2-2.
MSIVK16A2C2-LFCO	=MSIVK16A2C2LFCOX+LOC-4E2-2.
MSIVK16A2D2-LFCO	=MSIVK16A2D2LFCOX+LOC-4E2-2.
MSIVK51A-LFO	=MSIVK51ALFOX+LOC-4E2-1+2NB045.
MSIVK51A1A1-LFCO	=MSIVK51A1A1LFCOX+LOC-4E2-1.
MSIVK51A1B1-LFCO	=MSIVK51A1B1LFCOX+LOC-4E2-1.
MSIVK51A1C1-LFCO	=MSIVK51A1C1LFCOX+LOC-4E2-1.
MSIVK51A1D1-LFCO	=MSIVK51A1D1LFCOX+LOC-4E2-1.
MSIVK52B-LFO	=MSIVK52BLFOX+LOC-4E2-2+2NB075.
MSIVK52B2A1-LFCO	=MSIVK52B2A1LFCOX+LOC-4E2-2.
MSIVK52B2B1-LFCO	=MSIVK52B2B1LFCOX+LOC-4E2-2.
MSIVK52B2C1-LFCO	=MSIVK52B2C1LFCOX+LOC-4E2-2.
MSIVK52B2D1-LFCO	=MSIVK52B2D1LFCOX+LOC-4E2-2.
MSS0001P-PIP-LFR	=MSS0001P-PIPLFRX.
MSS0002P-PIP-LFR	=MSS0002P-PIPLFRX.
MSS0003P-PIP-LFR	=MSS0003P-PIPLFRX.
MSS0004P-PIP-LFR	=MSS0004P-PIPLFRX.
MSS0005P-PIP-LFR	=MSS0005P-PIPLFRX.
MSS0006P-PIP-LFR	=MSS0006P-PIPLFRX.
MSS000C6-PIP-LFR	=MSS000C6-PIPLFRX.
MSS000C7-PIP-LFR	=MSS000C7-PIPLFRX.
MSS000E1-PIP-LFR	=MSS000E1-PIPLFRX.
MSS000F2-PIP-LFR	=MSS000F2-PIPLFRX.
MSS418AB-VOC-CC	=MSS418AB-VOCCCX+LOC-5B2+LOC-4E4+LOC-4C1+LOC-4E2-1+2NB245 +2NB246.

Table E.4 (Continued)

Component to Location and Associated Cable Transformation

Component	Transformation
MSS418AB-VOC-LF	=MSS418AB-VOCLFX+LOC-5B2.
MSS418BB-VOC-CC	=MSS418BB-VOCCCX+LOC-5B2+LOC-4E4+LOC-4C1+LOC-4E2-1+2NB242 +2NB243.
MSS418BB-VOC-LF	=MSS418BB-VOCLFX+LOC-5B2.
MSS422AE-VOC-CC	=MSS422AE-VOCCCX+LOC-5A2-1+LOC-5C11-4+LOC-4C1+2NB201+2NB202.
MSS422AE-VOC-LF	=MSS422AE-VOCLFX+LOC-5A2-1.
MSS422BB-VOC-CC	=MSS422BB-VOCCCX+LOC-5A2-2+LOC-5C11-4+LOC-4C1+2NB204+2NB205.
MSS422BB-VOC-LF	=MSS422BB-VOCLFX+LOC-5A2-2.
MSSCONDR-TNK-LF	=MSSCONDR-TNKLFX.
MSSF10AA-FUS-LF	=MSSF10AA-FUSLFX+LOC-4E2-1.
MSSF10BB-FUS-LF	=MSSF10BB-FUSLFX+LOC-4E2-2.
MSSF12AB-FUS-LF	=MSSF12AB-FUSLFX+LOC-4E2-1.
MSSF12BA-FUS-LF	=MSSF12BA-FUSLFX+LOC-4E2-2.
MSSF22AB-NOC-LF	=MSSF22AB-NOCLFX+LOC-3J.
MSSF22BB-NOC-LF	=MSSF22BB-NOCLFX+LOC-3J.
MSSF22CB-NOC-LF	=MSSF22CB-NOCLFX+LOC-3J.
MSSF22DB-NOC-LF	=MSSF22DB-NOCLFX+LOC-3J.
MSSF28AA-NOC-LF	=MSSF28AA-NOCLFX+LOC-3K.
MSSF28BA-NOC-LF	=MSSF28BA-NOCLFX+LOC-3K.
MSSF28CA-NOC-LF	=MSSF28CA-NOCLFX+LOC-3K.
MSSF28DA-NOC-LF	=MSSF28DA-NOCLFX+LOC-3K.
MSSF488D-VCO-CC	=MSSF488D-VCOCCX+LOC-5B2+LOC-5B4+LOC-4C1+2NB631+2NB632.
MSSF488D-VCO-LF	=MSSF488D-VCOLFX+LOC-5B2.
MSSPV01X-NCC-LF	=MSSPV01X-NCCLFX+LOC-5B2.
MSSPV02X-NCC-LF	=MSSPV02X-NCCLFX+LOC-5B2.
MSSPV03X-NCC-LF	=MSSPV03X-NCCLFX+LOC-5B2.
MSSPV04X-NCC-LF	=MSSPV04X-NCCLFX+LOC-5B2.
MSSPV05X-NCC-LF	=MSSPV05X-NCCLFX+LOC-5B2.
MSSS01A1-SED-LF	=MSSS01A1-SEDLFX+LOC-3J+2NB135+2NB138+2NB581.
MSSS01A2-SED-LF	=MSSS01A2-SEDLFX+LOC-3J+2NB135+2NB138+2NB582.
MSSS01AB-SOC-LF	=MSSS01AB-SOCLFX+LOC-3J.
MSSS01B1-SED-LF	=MSSS01B1-SEDLFX+LOC-3J+2NB140+2NB143+2NB583.
MSSS01B2-SED-LF	=MSSS01B2-SEDLFX+LOC-3J+2NB140+2NB143+2NB155.
MSSS01BB-SOC-LF	=MSSS01BB-SOCLFX+LOC-3J.
MSSS01C1-SED-LF	=MSSS01C1-SEDLFX+LOC-3J+2NB145+2NB148+2NB156.
MSSS01C2-SED-LF	=MSSS01C2-SEDLFX+LOC-3J+2NB145+2NB148+2NB584.
MSSS01CB-SOC-LF	=MSSS01CB-SOCLFX+LOC-3J.
MSSS01D1-SED-LF	=MSSS01D1-SEDLFX+LOC-3J+2NB150+2NB153+2NB585.
MSSS01D2-SED-LF	=MSSS01D2-SEDLFX+LOC-3J+2NB150+2NB153+2NB157.
MSSS01DB-SOC-LF	=MSSS01DB-SOCLFX+LOC-3J.
MSSS02A1-SED-LF	=MSSS02A1-SEDLFX+LOC-3K+2NB158+2NB159+2NB169.
MSSS02A2-SED-LF	=MSSS02A2-SEDLFX+LOC-3K+2NB158+2NB159+2NB170.

Table E.4 (Continued)

Component to Location and Associated Cable Transformation

Component	Transformation
MSSS02AA-SOC-LF	=MSSS02AA-SOCLFX+LOC-3K.
MSSS02B1-SED-LF	=MSSS02B1-SEDLFX+LOC-3K+2NB160+2NB161+2NB171.
MSSS02B2-SED-LF	=MSSS02B2-SEDLFX+LOC-3K+2NB160+2NB161+2NB166.
MSSS02BA-SOC-LF	=MSSS02BA-SOCLFX+LOC-3K.
MSSS02C1-SED-LF	=MSSS02C1-SEDLFX+LOC-3K+2NB162+2NB163+2NB167.
MSSS02C2-SED-LF	=MSSS02C2-SEDLFX+LOC-3K+2NB162+2NB163+2NB172.
MSSS02CA-SOC-LF	=MSSS02CA-SOCLFX+LOC-3K.
MSSS02D1-SED-LF	=MSSS02D1-SEDLFX+LOC-3K+2NB164+2NB165+2NB173.
MSSS02D2-SED-LF	=MSSS02D2-SEDLFX+LOC-3K+2NB164+2NB165+2NB168.
MSSS02DA-SOC-LF	=MSSS02DA-SOCLFX+LOC-3K.
NE1F512X-FUS-LF	=NE1F512X-FUSLFX+LOC-4F2.
NE231AD-480-LF	=NE231AD-480LFX+LOC-5C11.
NE231AD-V-UUM	=NE231AD-VUUMX.
NE232AE-480-LF	=NE232AE-480LFX+LOC-5B4.
NE232AE-V-UUM	=NE232AE-VUUMX.
NE251D-690-LF	=NE251D-690LFX+LOC-4F2.
NE252E-690-LF	=NE252E-690LFX+LOC-4E4.
NE252E-V-UUM	=NE252E-VUUMX.
NE2F512X-FUS-LF	=NE2F512X-FUSLFX+LOC-4F2.
NE31A1D-480-LF	=NE31A1D-480LFX+LOC-6D.
NE31A1D-V-UUM	=NE31A1D-VUUMX.
NE31A2D-480-LF	=NE31A2D-480LFX+LOC-5B4.
NE31A2D-V-UUM	=NE31A2D-VUUMX.
NE31A3D-480-LF	=NE31A3D-480LFX+LOC-6E.
NE31A3D-V-UUM	=NE31A3D-VUUMX.
NE31B1D-480-LF	=NE31B1D-480LFX+LOC-5E2.
NE31B1D-V-UUM	=NE31B1D-VUUMX.
NE31B3D-480-LF	=NE31B3D-480LFX+LOC-5A3-10.
NE31B3D-V-UUM	=NE31B3D-VUUMX.
NE31BD-480-LF	=NE31BD-480LFX+LOC-5B6.
NE31BD-V-UUM	=NE31BD-VUUMX.
NE31Y1A-480-LF	=NE31Y1A-480LFX+LOC-LSH.
NE31Y1A-V-UUM	=NE31Y1A-VUUMX.
NE31YA-480-LF	=NE31YA-480LFX+LOC-5B6.
NE31YA-V-UUM	=NE31YA-VUUMX.
NE32A1E-480-LF	=NE32A1E-480LFX+LOC-5C11.
NE32A1E-V-UUM	=NE32A1E-VUUMX.
NE32B1E-480-LF	=NE32B1E-480LFX+LOC-5C11-4.
NE32B1E-V-UUM	=NE32B1E-VUUMX.
NE32B3E-480-LF	=NE32B3E-480LFX+LOC-5D4.
NE32B3E-TFM-LF	=NE32B3E-TFMLFX+LOC-5D4.
NE32B3E-V-UUM	=NE32B3E-VUUMX.

Table E.4 (Continued)

Component to Location and Associated Cable Transformation

Component	Transformation
NE32BE-480-LF	=NE32BE-480LFX+LOC-5B6.
NE32BE-V-UUM	=NE32BE-VUUMX.
NE32Y1B-480-LF	=NE32Y1B-480LFX+LOC-LSH.
NE32Y1B-V-UUM	=NE32Y1B-VUUMX.
NE32Y2B-480-LF	=NE32Y2B-480LFX+LOC-5C11-4.
NE32Y2B-V-UUM	=NE32Y2B-VUUMX.
NE32YB-480-LF	=NE32YB-480LFX+LOC-5A3-10.
NE32YB-V-UUM	=NE32YB-VUUMX.
NE33B1D-480-LF	=NE33B1D-480LFX+LOC-5A3-5.
NE33B1D-V-UUM	=NE33B1D-VUUMX.
NE33B2D-480-LF	=NE33B2D-480LFX+LOC-6D.
NE33B2D-V-UUM	=NE33B2D-VUUMX.
NE33BD-480-LF	=NE33BD-480LFX+LOC-5A3-5.
NE33BD-V-UUM	=NE33BD-VUUMX.
NE41XA-416-LF	=NE41XA-416LFX+LOC-5C11-4.
NE41XA-V-UUM	=NE41XA-VUUMX.
NE42XB-416-LF	=NE42XB-416LFX+LOC-5B13-2.
NEB231A-B-UUM	=NEB231A-BUUMX.
NEB231A-BCO-AS	=NEB231A-BCOASX+LOC-5C11-4+LOC-4A-2+LOC-5B6+LOC-4C1+2AP447 +2AP448+2AP147+2AP146.
NEB231A-BCO-LF	=NEB231A-BCOLFX+LOC-5C11-4+2AP145.
NEB231D-B-UUM	=NEB231D-BUUMX.
NEB231D-BCO-AS	=NEB231D-BCOASX+LOC-4F2+LOC-5C11+LOC-5B6+LOC-4C1+2AP478 +2AP479+2AP141+2AP142.
NEB231D-BCO-LF	=NEB231D-BCOLFX+LOC-4F2+2AP140+2AP149.
NEB232B-B-UUM	=NEB232B-BUUMX.
NEB232B-BCO-AS	=NEB232B-BCOASX+LOC-5B13-2+LOC-4B-1+LOC-5A3-10+LOC-4C1 +2AP156+2AP159+2AP153+2AP152.
NEB232B-BCO-LF	=NEB232B-BCOLFX+LOC-5B13-2+2AP151.
NEB232BB-B-UUM	=NEB232BB-BUUMX.
NEB232BB-BCO-AS	=NEB232BB-BCOASX+LOC-4E4+LOC-5B4+LOC-5B6+LOC-4C1+2AP462 +2AP463+2AP232+2AP191+2AP192.
NEB232BB-BCO-LF	=NEB232BB-BCOLFX+LOC-4E4+2AP189+2AP190.
NEB233D-B-UUM	=NEB233D-BUUMX.
NEB233D-BCO-AS	=NEB233D-BCOASX+LOC-4F2+LOC-4B-1+LOC-5A3-5+LOC-4C1+2AP210 +2AP209+2AP466+2AP467.
NEB233D-BCO-LF	=NEB233D-BCOLFX+LOC-4F2+2AP211+2AP212.
NEB2Y218X-BCO	=NEB2Y218XBCOX+LOC-5C11-4.
NEB31A1X-B-UUM	=NEB31A1X-BUUMX.
NEB31A1X-BCO-LF	=NEB31A1X-BCOLFX+LOC-5C11.
NEB31A2X-B-UUM	=NEB31A2X-BUUMX.
NEB31A2X-BCO-LF	=NEB31A2X-BCOLFX+LOC-5C11+2AP286.

Table E.4 (Continued)

Component to Location and Associated Cable Transformation

Component	Transformation
NEB31A3X-B-UUM	=NEB31A3X-BUUMX.
NEB31A3X-BCO-LF	=NEB31A3X-BCOLFX+LOC-5C11.
NEB31B1X-B-UUM	=NEB31B1X-BUUMX.
NEB31B1X-BCO-LF	=NEB31B1X-BCOLFX+LOC-5B6.
NEB31B3X-B-UUM	=NEB31B3X-BUUMX.
NEB31B3X-BCO-LF	=NEB31B3X-BCOLFX+LOC-5B6+2AP307.
NEB31Y1A-B-UUM	=NEB31Y1A-BUUMX.
NEB31Y1A-BCO-LF	=NEB31Y1A-BCOLFX+LOC-5B6+2AP297.
NEB32A1X-B-UUM	=NEB32A1X-BUUMX.
NEB32A1X-BCO-LF	=NEB32A1X-BCOLFX+LOC-5B4.
NEB32B1X-B-UUM	=NEB32B1X-BUUMX.
NEB32B1X-BCO-LF	=NEB32B1X-BCOLFX+LOC-5B6+2AP305.
NEB32B3X-B-UUM	=NEB32B3X-BUUMX.
NEB32B3X-BCO-LF	=NEB32B3X-BCOLFX+LOC-5B6.
NEB32Y1X-B-UUM	=NEB32Y1X-BUUMX.
NEB32Y1X-BCO-LF	=NEB32Y1X-BCOLFX+LOC-5A3-10.
NEB32Y2X-B-UUM	=NEB32Y2X-BUUMX.
NEB32Y2X-BCO-LF	=NEB32Y2X-BCOLFX+LOC-5A3-10+2AP288.
NEB33B1X-B-UUM	=NEB33B1X-BUUMX.
NEB33B1X-BCO-LF	=NEB33B1X-BCOLFX+LOC-5A3-5+2AP301.
NEB33B2X-B-UUM	=NEB33B2X-BUUMX.
NEB33B2X-BCO-LF	=NEB33B2X-BCOLFX+LOC-5A3-5+2AP424.
NEB512D-BOO-CC	=NEB512D-BOOCCX+LOC-4F2+LOC-4C1+2AP065+2AP054+2AP064+2AP063.
NEB512D-BOO-LF	=NEB512D-BOOLFX+LOC-4F2.
NEB512D1-B-UUM	=NEB512D1-BUUMX.
NEB522E-BCO-CC	=NEB522E-BCOCCX+LOC-4E4+LOC-4C1+2AP084+2AP083+2AP082+2AP506 +2AP081.
NEB522E-BCO-LF	=NEB522E-BCOLFX+LOC-4E4.
NET231A-TFM-LF	=NET231A-TFMLFX+LOC-5B6.
NET231AX-TFM-LF	=NET231AX-TFMLFX+LOC-5C11.
NET231BX-TFM-LF	=NET231BX-TFMLFX+LOC-5B6.
NET232AX-TFM-LF	=NET232AX-TFMLFX+LOC-5B4.
NET232BX-TFM-LF	=NET232BX-TFMLFX+LOC-5B6.
NET232YX-TFM-LF	=NET232YX-TFMLFX+LOC-5A3-10.
NET33BD-TFM-LF	=NET33BD-TFMLFX+LOC-5A3-5.
NEVB001X-B-UUM	=NEVB001X-BUUMX.
NEVB001X-BCO-LF	=NEVB001X-BCOLFX+LOC-3G-1+2VY016.
NEVDCT0A-DCT-LFR	=NEVDCT0A-DCTLFRX.
NEVY04AX-A-UUM	=NEVY04AX-AUUMX.
NEVY04AX-ACX-LFI	=NEVY04AX-ACXLFIX.
NEVY04CA-F-UUM	=NEVY04CA-FUUMX.

Table E.4 (Continued)

Component to Location and Associated Cable Transformation

Component	Transformation
NEVY04CA-FMS-CC	=NEVY04CA-FMSCCX+LOC-3G-1+LOC-3H4+LOC-3H1+LOC-3I4+LOC-3F-1 +LOC-4F2+2VY049+2VY104+2VY017+2VY050+2VY051+2VY077.
NEVY04CA-FMS-LF	=NEVY04CA-FMSLFX+LOC-3H1.
NLOSP	=NLOSPX.
NOFLOW-A1A	=NOFLOWA1AX.
NOFLOW-B1A	=NOFLOWB1AX.
NOFLOW-CSS-A7A	=NOFLOW-CSSA7AX.
NOFLOW-CSS-B7A	=NOFLOW-CSSB7AX.
NOFLOW-LCI-A7	=NOFLOW-LCIA7X.
NOFLOW-LCI-B7	=NOFLOW-LCIB7X.
NOFLOW-RHR-A1	=NOFLOW-RHRA1X.
NOFLOW-RHR-A3	=NOFLOW-RHRA3X.
NOFLOW-RHR-B1	=NOFLOW-RHRB1X.
NOFLOW-RHR-B3	=NOFLOW-RHRB3X.
NOFLOW-SCS-A6B	=NOFLOW-SCSA6BX.
NOFLOW-SCS-B6A	=NOFLOW-SCSB6AX.
NOFLOW-SPC-A5X	=NOFLOW-SPCA5XX.
NOFLOW-SPC-B5X	=NOFLOW-SPCB5XX.
NOHIGH-DWPRESS	=NOHIGHDWPRESSX.
NORXLEVEL-LOW	=NORXLEVELLOWX.
NPSH-X-LFO	=NPSH-XLFOX+LOC-5D4+2CD045.
NPSHNPSH-X-LFOO	=NPSHNPSH-XLFOOX+LOC-5D4.
NPSHXCDM1PD-LFOO	=NPSHXCDM1PDLFOOX+LOC-5D4.
NWVB001X-B-UUM	=NWVB001X-BUUMX.
NWVB001X-BCO-LF	=NWVB001X-BCOLFX+LOC-3G-1+2VY010.
NWVDCT0A-DCT-LFR	=NWVDCT0A-DCTLFRX.
NWVY01AX-A-UUM	=NWVY01AX-AUUMX.
NWVY01AX-ACX-LFI	=NWVY01AX-ACXLFIX.
NWVY01CA-F-UUM	=NWVY01CA-FUUMX.
NWVY01CA-FMS-CC	=NWVY01CA-FMSCCX+LOC-3G-1+LOC-3H1+LOC-4F2+LOC-3H5+2VY011 +2VY102+2VY044+2VY045.
NWVY01CA-FMS-LF	=NWVY01CA-FMSLFX+LOC-3H1.
OE-HCSF015C-FTO	=OE-HCSF015CFTOX+LOC-4C1.
OPERFAIL-VENT-OE	=OPERFAIL-VENTOEX+LOC-4C1.
OPERR-INITCSS	=OPERRINITCSSX+LOC-4C1.
OPERR-INITSCS	=OPERRINITSCSX+LOC-4C1.
OPERR-INITSPC	=OPERRINITSPCX+LOC-4C1.
OPFAILS-REOPEN	=OPFAILSREOPENX+LOC-4C1.
OPFAILSCDS-OE	=OPFAILSCDSOEX+LOC-4C1.
OPTURNSOFF-TURB	=OPTURNSOFFTURBX+LOC-4C1.
PC02AAAX-AOO-LFO	=PC02AAAX-AOOLFOX+LOC-4F2.
PS15XA-LFO	=PS15XALFOX+LOC-5A3-10+2FW250+2FW251+2FW252.

Table E.4 (Continued)

Component to Location and Associated Cable Transformation

Component	Transformation
PS15XA12-LFCC	=PS15XA12LFCCX+LOC-5A3-10.
PS15XAB-BCO	=PS15XABBCOX+LOC-4F2.
PS15XB-LFO	=PS15XBLFOX+LOC-5A3-10+2FW257+2FW255+2FW256.
PS15XB12-LFCC	=PS15XB12LFCCX+LOC-5A3-10.
PS15XBB-BCO	=PS15XBBBCOX+LOC-4E4.
PSFW167X-LFO	=PSFW167XLFOX+LOC-5A3-10+2FW230.
PSLCB039-OCO-FSL	=PSLCB039-OCOFSLX.
PSLCB039-OCO-LFO	=PSLCB039-OCOLFOX+LOC-5C11-5.
PSLCB39X-LFO	=PSLCB39XLFOX+LOC-5A3-10.
PSLCB39X112-LFCO	=PSLCB39X112LFCOX+LOC-5A3-10.
PSLCB39X12-LFOC	=PSLCB39X12LFOCX+LOC-5A3-10.
PSLCB39X56-LFOC	=PSLCB39X56LFOCX+LOC-5A3-10.
PSLCB39X910-LFOC	=PSLCB39X910LFOCX+LOC-5A3-10.
PSLFW167X12-LFOC	=PSLFW167X12LFOCX+LOC-5A3-10.
PSLFW167X34-LFCO	=PSLFW167X34LFCOX+LOC-5A3-10.
PSTCO149-OCO-FSL	=PSTCO149-OCOFSLX.
PSTCO149-OCO-LFO	=PSTCO149-OCOLFOX+LOC-5B3.
PSTLO026-OCO-FSL	=PSTLO026-OCOFSLX.
PSTLO026-OCO-LFO	=PSTLO026-OCOLFOX+LOC-5B3.
PSTLO027-OCO-FSL	=PSTLO027-OCOFSLX.
PSTLO027-OCO-LFO	=PSTLO027-OCOLFOX+LOC-5B3.
PSTLO25A-OCO-FSL	=PSTLO25A-OCOFSLX.
PSTLO25A-OCO-LFO	=PSTLO25A-OCOLFOX+LOC-5B3.
PSTLO25B-OCO-FSL	=PSTLO25B-OCOFSLX.
PSTLO25B-OCO-LFO	=PSTLO25B-OCOLFOX+LOC-5B3.
PSW001AX-XOC-LF	=PSW001AX-XOCLFX.
PSW001BX-XOC-LF	=PSW001BX-XOCLFX.
PSW001SX-XOC-LF	=PSW001SX-XOCLFX.
PSW002AX-XOC-LF	=PSW002AX-XOCLFX.
PSW002BX-XOC-LF	=PSW002BX-XOCLFX.
PSW002SX-XOC-LF	=PSW002SX-XOCLFX.
PSW003AX-COC-LF	=PSW003AX-COCLFX.
PSW003BX-COC-LF	=PSW003BX-COCLFX.
PSW003SX-COC-LF	=PSW003SX-COCLFX.
PSW004XX-XOC-LF	=PSW004XX-XOCLFX.
PSW005XX-XOC-LF	=PSW005XX-XOCLFX.
PSW007BX-XOC-LF	=PSW007BX-XOCLFX.
PSW01FBX-STX-LF	=PSW01FBX-STXLFX.
PSW01PAA-PMS-FR	=PSW01PAA-PMSFRX+LOC-LSH.
PSW01PBB-PMS-FR	=PSW01PBB-PMSFRX+LOC-LSH.
PSW01PSA-PMS-FR	=PSW01PSA-PMSFRX+LOC-LSH.
PSW025DX-VOC-CA	=PSW025DX-VOCCAX+LOC-5B4+LOC-4C1+2WS042.

Table E.4 (Continued)

Component to Location and Associated Cable Transformation

Component	Transformation
PSW025DX-VOC-LF	=PSW025DX-VOCLFX+LOC-5B4.
PSW026AX-XOC-LF	=PSW026AX-XOCLFX.
PSW027AX-XOC-LF	=PSW027AX-XOCLFX.
PSW028XX-XOC-LF	=PSW028XX-XOCLFX.
PSW029X-NOC-AS	=PSW029X-NOCASX+LOC-5D5.
PSW029X-NOC-LF	=PSW029X-NOCLFX+LOC-5D5.
PSW030XX-XOC-LF	=PSW030XX-XOCLFX.
PSW032AX-XOC-LF	=PSW032AX-XOCLFX.
PSW033AX-XOC-LF	=PSW033AX-XOCLFX.
PSW034XX-XOC-LF	=PSW034XX-XOCLFX.
PSW035X-NOC-AS	=PSW035X-NOCASX+LOC-5D5.
PSW035X-NOC-LF	=PSW035X-NOCLFX+LOC-5D5.
PSW036XX-XOC-LF	=PSW036XX-XOCLFX.
PSW085AX-XOC-LF	=PSW085AX-XOCLFX.
PSW085BX-XOC-LF	=PSW085BX-XOCLFX.
PSW086AX-XOC-LF	=PSW086AX-XOCLFX.
PSW086BX-XOC-LF	=PSW086BX-XOCLFX.
PSW087AX-NOC-AS	=PSW087AX-NOCASX+LOC-3D.
PSW087AX-NOC-LF	=PSW087AX-NOCLFX+LOC-3D.
PSW087BX-NOC-AS	=PSW087BX-NOCASX+LOC-3D.
PSW087BX-NOC-LF	=PSW087BX-NOCLFX+LOC-3D.
PSW088AX-XOC-LF	=PSW088AX-XOCLFX.
PSW088BX-XOC-LF	=PSW088BX-XOCLFX.
PSW114-XOC-LF	=PSW114-XOCLFX.
PSW175-VOC-CC	=PSW175-VOCCCX+LOC-3G-1+LOC-4C1+LOC-3F-1+2WS095+2WS094 +2WS016.
PSW175-VOC-LF	=PSW175-VOCLFX+LOC-3G-1.
PSW191DX-VOC-CA	=PSW191DX-VOCCAX+LOC-5C11+LOC-4C1+2WS102+2WS101.
PSW191DX-VOC-LF	=PSW191DX-VOCLFX+LOC-5C11.
PSW216XX-XOC-LF	=PSW216XX-XOCLFX.
PSW217XX-XOC-LF	=PSW217XX-XOCLFX.
PSWBP1AA-BCO-CC	=PSWBP1AA-BCOCCX+LOC-5C11-4+LOC-4C1+LOC-4F2+2WS011+2WS012.
PSWBP1AA-BCO-LF	=PSWBP1AA-BCOLFX+LOC-4F2+2WS010.
PSWBP2BB-BCO-CC	=PSWBP2BB-BCOCCX+LOC-5B13-2+LOC-4C1+LOC-4E4+2WS014+2WS015.
PSWBP2BB-BCO-LF	=PSWBP2BB-BCOLFX+LOC-4E4+2WS013.
PSWBP3CA-BCO-CC	=PSWBP3CA-BCOCCX+LOC-5C11-4+LOC-4C1+LOC-4F2+2WS021+2WS020.
PSWBP3CA-BCO-LF	=PSWBP3CA-BCOLFX+LOC-4F2+2WS019.
PSWPSWI2-PIP-LFR	=PSWPSWI2-PIPLFRX.
PSWPSWI3-PIP-LFR	=PSWPSWI3-PIPLFRX.
PSWPSWI4-PIP-LFR	=PSWPSWI4-PIPLFRX.
PSWPSWI5-PIP-LFR	=PSWPSWI5-PIPLFRX.
PSWPSWI6-PIP-LFR	=PSWPSWI6-PIPLFRX.

Table E.4 (Continued)

Component to Location and Associated Cable Transformation

Component	Transformation
PTCB040-ASP-FSL	=PTCB040-ASPFSLX.
PTCB040-ASP-LFO	=PTCB040-ASPLFOX+LOC-5C11-5+2CB082.
RACN101A-OOC-FSL	=RACN101A-OOCFSLX.
RACN101A-OOC-LFC	=RACN101A-OOCLFCX+LOC-3E+2RI107.
RACN101B-OOC-FSL	=RACN101B-OOCFSLX.
RACN101B-OOC-LFC	=RACN101B-OOCLFCX+LOC-3E+2RI103.
RACTCSN-QOC-LF	=RACTCSN-QOCLFX+LOC-4C1.
RACTK15CP1-LFOC	=RACTK15CP1LFOCX+LOC-4E2-2+2RI109.
RACTK15CP3-LFOC	=RACTK15CP3LFOCX+LOC-4E2-2+2RI109.
RACTK17-ROO-LFO	=RACTK17-ROOLFOX+LOC-4E2-2.
RACTK17CP1-LFOO	=RACTK17CP1LFOOX+LOC-4E2-2.
RACTK18CPM1-LFCO	=RACTK18CPM1LFCOX+LOC-4E2-2.
RACTK18CPT1-LFOC	=RACTK18CPT1LFOCX+LOC-4E2-2.
RACTK2-ROO-LFO	=RACTK2-ROOLFOX+LOC-4E2-2+2RI107.
RACTK20CP3-LFCO	=RACTK20CP3LFCOX+LOC-4E2-2.
RACTK20CP5-LFOC	=RACTK20CP5LFOCX+LOC-4E2-2.
RACTK23CP1-LFCO	=RACTK23CP1LFCOX+LOC-4E2-2.
RACTK29CP1-LFOC	=RACTK29CP1LFOCX+LOC-4E2-2.
RACTK2ACP1-LFOC	=RACTK2ACP1LFOCX+LOC-4C1.
RACTK2BCP1-LFOC	=RACTK2BCP1LFOCX+LOC-4C1.
RACTK2CP3-LFOO	=RACTK2CP3LFOOX+LOC-4E2-2.
RACTK2CP5-LFOO	=RACTK2CP5LFOOX+LOC-4E2-2.
RACTK3-ROO-LFO	=RACTK3-ROOLFOX+LOC-4E2-2+2RI107.
RACTK32CPM1-LFOC	=RACTK32CPM1LFOCX+LOC-4E2-1.
RACTK33CP1-LFOC	=RACTK33CP1LFOCX+LOC-4E2-1+2RI175.
RACTK33CP3-LFOC	=RACTK33CP3LFOCX+LOC-4E2-1+2RI175.
RACTK39CP1-LFOC	=RACTK39CP1LFOCX+LOC-4E2-1.
RACTK3CP7-LFOO	=RACTK3CP7LFOOX+LOC-4E2-2.
RACTK40CP1-LFCO	=RACTK40CP1LFCOX+LOC-4E2-2.
RACTK40CP3-LFOC	=RACTK40CP3LFOCX+LOC-4E2-2.
RACTK47CPM1-LFOC	=RACTK47CPM1LFOCX+LOC-4E2-2.
RACTK48CPM1-LFOC	=RACTK48CPM1LFOCX+LOC-4E2-1.
RACTK5-ROO-LFO	=RACTK5-ROOLFOX+LOC-4E2-2.
RACTK51-ROO-LFO	=RACTK51-ROOLFOX+LOC-4E2-1+2RI102.
RACTK51CP1-LFOO	=RACTK51CP1LFOOX+LOC-4E2-1.
RACTK52-ROO-LFO	=RACTK52-ROOLFOX+LOC-4E2-1+2RI102.
RACTK52CP1-LFOO	=RACTK52CP1LFOOX+LOC-4E2-1.
RACTK53CP1-LFOC	=RACTK53CP1LFOCX+LOC-4E2-1.
RACTK54CP1-LFOC	=RACTK54CP1LFOCX+LOC-4E2-2.
RACTK54CP3-LFOC	=RACTK54CP3LFOCX+LOC-4E2-2.
RACTK55CP1-LFOC	=RACTK55CP1LFOCX+LOC-4E2-2.
RACTK55CP3-LFOC	=RACTK55CP3LFOCX+LOC-4E2-2.

Table E.4 (Continued)

Component to Location and Associated Cable Transformation

Component	Transformation
RACTK56CP3-LFOC	=RACTK56CP3LFOCX+LOC-4E2-2.
RACTK57CP1-LFOC	=RACTK57CP1LFOCX+LOC-4E2-1.
RACTK57CP3-LFOC	=RACTK57CP3LFOCX+LOC-4E2-1.
RACTK58CP1-LFOC	=RACTK58CP1LFOCX+LOC-4E2-1.
RACTK58CP3-LFOC	=RACTK58CP3LFOCX+LOC-4E2-1.
RACTK59CP3-LFOC	=RACTK59CP3LFOCX+LOC-4E2-1.
RACTK5CP7-LFOO	=RACTK5CP7LFOOX+LOC-4E2-2.
RACTK5CPB-LFOC	=RACTK5CPBLFOCX+LOC-4E2-2.
RACTK75CP1-LFOC	=RACTK75CP1LFOCX+LOC-4E2-2.
RACTK75CP5-LFCO	=RACTK75CP5LFCOX+LOC-4E2-2.
RACTS160-QOC-LF	=RACTS160-QOCLFX+LOC-4C1+2RI106.
RACTS230-QOC-LF	=RACTS230-QOCLFX+LOC-4C1.
RACTS250-QOC-LF	=RACTS250-QOCLFX+LOC-4C1+2RI176.
RAN035A-OOO-FSL	=RAN035A-OOOFSLX.
RAN035A-OOO-LFO	=RAN035A-OOOLFOX+LOC-OUTSIDE+2RI281+2RI280+2RI282.
RAN035B-OOO-FSL	=RAN035B-OOOFSLX.
RAN035B-OOO-LFO	=RAN035B-OOOLFOX+LOC-OUTSIDE+2RI283+2RI284+2RI282.
RC1FU021-FUS-LF	=RC1FU021-FUSLFX+LOC-4E2-1.
RCIACTCA-BCO	=RCIACTCABCOX+LOC-4F2+2RI157.
RCIACTCB-BCO	=RCIACTCBBCOX+LOC-4E4+2RI174.
RCIC-SYS-OP	=RCIC-SYSOPX.
RCIC001X-P-UUM	=RCIC001X-PUUMX.
RCIC001X-PTO001	=RCIC001XPTO001X.
RCIC001X-RO001-0	=RCIC001X-RO0010X.
RCIC001X-TDP-LF	=RCIC001X-TDPLFX+LOC-3I4.
RCICBF13-B-UUM	=RCICBF13-BUUMX.
RCICBF13-BCO-LF	=RCICBF13-BCOLFX+LOC-3H4+2RI035.
RCICRMCOOL-FLAG	=RCICRMCOOLFLAGX.
RCID001X-STR	=RCID001XSTRX.
RCIF008C-V-UUM	=RCIF008C-VUUMX.
RCIF008C-VOC-CR	=RCIF008C-VOCCRX+LOC-3E+LOC-4E2-1+LOC-4E2-2+LOC-4C1+LOC-3F-1 +2RI181+2RI182+2RI198+2RI257+2RI184+2RI183.
RCIF008C-VOC-LF	=RCIF008C-VOCLFX+LOC-3F-1.
RCIF010C-V-UUM	=RCIF010C-VUUMX.
RCIF010C-VOC-CR	=RCIF010C-VOCCRX+LOC-3H4+LOC-4E2-1+LOC-4E2-2+LOC-4C1+2RI032 +2RI060+2RI033+2RI034.
RCIF010C-VOC-LF	=RCIF010C-VOCLFX+LOC-3H4.
RCIF011X-CCC-LF	=RCIF011X-CCCLFX.
RCIF012X-XOC-LF	=RCIF012X-XOCLFX.
RCIF013C-V-UUM	=RCIF013C-VUUMX.
RCIF013C-VCC-CR	=RCIF013C-VCCCRX+LOC-3H4+LOC-4E2-2+LOC-4C1+LOC-4E2-1 +LOC-3F-1+2RI036+2RI061+2RI037+2RI038.

Table E.4 (Continued)

Component to Location and Associated Cable Transformation

Component	Transformation
RCIF013C-VCC-LF	=RCIF013C-VCCLFX+LOC-3F-1.
RCIF016X-XOC-LF	=RCIF016X-XOCLFX.
RCIF022C-VCO-CR	=RCIF022C-VCOCRX+LOC-3H4+LOC-4E2-2+LOC-4C1+LOC-4E2-1+2RI044 +2RI062+2RI045+2RI046.
RCIF022C-VCO-LF	=RCIF022C-VCOLFX+LOC-3H4.
RCIF030X-CCC-LF	=RCIF030X-CCCLFX.
RCIF031C-V-UUM	=RCIF031C-VUUMX.
RCIF031C-VCC-CR	=RCIF031C-VCCCRX+LOC-3H4+LOC-4E2-2+LOC-4C1+LOC-4E2-1+LOC-3I1 +2RI056+2RI084+2RI057.
RCIF031C-VCC-LF	=RCIF031C-VCCLFX+LOC-3I1.
RCIF040X-CCC-LF	=RCIF040X-CCCLFX.
RCIF045C-V-UUM	=RCIF045C-VUUMX.
RCIF045C-VCC-CR	=RCIF045C-VCCCRX+LOC-3H4+LOC-4E2-1+LOC-4C1+LOC-4E2-2+LOC-3I4 +2RI028+2RI110+2RI059+2RI030+2RI029.
RCIF045C-VCC-LF	=RCIF045C-VCCLFX+LOC-3I4.
RCIF046C-V-UUM	=RCIF046C-VUUMX.
RCIF046C-VCC-CR	=RCIF046C-VCCCRX+LOC-3H4+LOC-4E2-2+LOC-4C1+LOC-4E2-1+LOC-3I4 +2RI048+2RI070+2RI049+2RI050.
RCIF046C-VCC-LF	=RCIF046C-VCCLFX+LOC-3I4.
RCIF059C-VCO-CR	=RCIF059C-VCOCRX+LOC-3H4+LOC-4E2-2+LOC-4C1+LOC-4E2-1+2RI064 +2RI085+2RI065+2RI066.
RCIF059C-VCO-LF	=RCIF059C-VCOLFX+LOC-3H4.
RCIF063C-VOC-CR	=RCIF063C-VOCCRX+LOC-3F-2+LOC-4E2-1+LOC-4C1+LOC-3J+2RI019 +2RI018+2RI041+2RI020+2RI240+2RI194+2RI021+2RI099.
RCIF063C-VOC-LF	=RCIF063C-VOCLFX+LOC-3J.
RCIF065X-CCC-LF	=RCIF065X-CCCLFX.
RCIF066X-CCC-LF	=RCIF066X-CCCLFX.
RCIF068C-V-UUM	=RCIF068C-VUUMX.
RCIF068C-VOC-CR	=RCIF068C-VOCCRX+LOC-3H4+LOC-4E2-1+LOC-4C1+LOC-3H1+2RI074 +2RI097+2RI075+2RI252.
RCIF068C-VOC-LF	=RCIF068C-VOCLFX+LOC-3H1.
RCIF080C-V-UUM	=RCIF080C-VUUMX.
RCIF080C-VOC-CR	=RCIF080C-VOCCRX+LOC-3H4+LOC-4E2-1+LOC-4C1+LOC-4E2-2+LOC-3H1 +2RI147+2RI112+2RI255+2RI148.
RCIF080C-VOC-LF	=RCIF080C-VOCLFX+LOC-3H1.
RCIF082X-CCC-LF	=RCIF082X-CCCLFX.
RCIF084X-CCC-LF	=RCIF084X-CCCLFX.
RCIF086C-V-UUM	=RCIF086C-VUUMX.
RCIF086C-VOC-CR	=RCIF086C-VOCCRX+LOC-3F-2+LOC-4E2-1+LOC-4C1+LOC-3H1+2RI127 +2RI114+2RI151+2RI150+2RI256.
RCIF086C-VOC-LF	=RCIF086C-VOCLFX+LOC-3H1.
RCIFU001-FUS-LF	=RCIFU001-FUSLFX+LOC-4E2-2.

Table E.4 (Continued)

Component to Location and Associated Cable Transformation

Component	Transformation
RCIFU002-FUS-LF	=RCIFU002-FUSLFX+LOC-4E2-2.
RCIFU022-FUS-LF	=RCIFU022-FUSLFX+LOC-4E2-1.
RCIPS001-PIP-LFR	=RCIPS001-PIPLFRX.
RCIPS002-PIP-LFR	=RCIPS002-PIPLFRX.
RCIPS003-PIP-LFR	=RCIPS003-PIPLFRX.
RCIPS004-PIP-LFR	=RCIPS004-PIPLFRX.
RCIPS005-PIP-LFR	=RCIPS005-PIPLFRX.
RCIPS007-PIP-LFR	=RCIPS007-PIPLFRX.
RCIPS008-PIP-LFR	=RCIPS008-PIPLFRX.
RCIPS009-PIP-LFR	=RCIPS009-PIPLFRX.
RCIPS010-PIP-LFR	=RCIPS010-PIPLFRX.
RCIPS011-PIP-LFR	=RCIPS011-PIPLFRX.
RCIPS013-PIP-LFR	=RCIPS013-PIPLFRX.
RCIRD001	=RCIRD001X+LOC-3I4.
RCITTTC-VOC-CR	=RCITTTC-VOCCRX+LOC-3I4+LOC-4C1+LOC-4E2-1+LOC-3H4+2RI068 +2RI096+2RI069.
RCITTTC-VOC-LF	=RCITTTC-VOCLFX+LOC-3I4.
RF031CCB-B-UUM	=RF031CCB-BUUMX.
RF031CCB-BCO-LF	=RF031CCB-BCOLFX+LOC-3H4+2RI055.
RF045CCB-B-UUM	=RF045CCB-BUUMX.
RF045CCB-BCO-LF	=RF045CCB-BCOLFX+LOC-3H4+2RI027.
RF046CB-B-UUM	=RF046CB-BUUMX.
RF046CB-BCO-LF	=RF046CB-BCOLFX+LOC-3H4+2RI047.
RF08XOX-AOO-LFO	=RF08XOX-AOOLFOX+LOC-3I4.
RF31S100-QOC-LF	=RF31S100-QOCLFX+LOC-4C1+2RI196.
RF45LSC-LFOC	=RF45LSCLFOCX+LOC-3I4.
RF45XOX-AOO-LFO	=RF45XOX-AOOLFOX+LOC-3F-1.
RF68LSC-LFOC	=RF68LSCLFOCX+LOC-3H1.
RHR10DA3-PIP-LFR	=RHR10DA3-PIPLFRX.
RHR10DB3-PIP-LFR	=RHR10DB3-PIPLFRX.
RHR301AX-STR	=RHR301AXSTRX.
RHR301BX-STR	=RHR301BXSTRX.
RHRAPIPE-PIP-LFR	=RHRAPIPE-PIPLFRX.
RHRB01AA-B-UUM	=RHRB01AA-BUUMX.
RHRB01AA-BOO-CC	=RHRB01AA-BOOCCX+LOC-4F2+LOC-4E2-2+LOC-4C1+2RH013+2RH014 +2RH047+2RH407.
RHRB01AA-BOO-LF	=RHRB01AA-BOOLFX+LOC-4F2+2RH010.
RHRB01BB-B-UUM	=RHRB01BB-BUUMX.
RHRB01BB-BOO-CC	=RHRB01BB-BOOCCX+LOC-4E2-1+LOC-4C1+LOC-4E4+2RH414+2RH304 +2RH426+2RH020+2RH408+2RH019.
RHRB01BB-BOO-LF	=RHRB01BB-BOOLFX+LOC-4E4+2RH016.
RHRB03AX-B-UUM	=RHRB03AX-BUUMX.

Table E.4 (Continued)

Component to Location and Associated Cable Transformation

Component	Transformation
RHRB03AX-BCO-LF	=RHRB03AX-BCOLFX+LOC-3G-1+2RH048.
RHRB03BX-B-UUM	=RHRB03BX-BUUMX.
RHRB03BX-BCO-LF	=RHRB03BX-BCOLFX+LOC-3G-1+2RH052.
RHRB04AX-B-UUM	=RHRB04AX-BUUMX.
RHRB04AX-BCO-LF	=RHRB04AX-BCOLFX+LOC-3G-1+2RH028.
RHRB04BX-B-UUM	=RHRB04BX-BUUMX.
RHRB04BX-BCO-LF	=RHRB04BX-BCOLFX+LOC-3G-1+2RH032.
RHRB05AX-B-UUM	=RHRB05AX-BUUMX.
RHRB05AX-BCO-LF	=RHRB05AX-BCOLFX+LOC-3G-1+2RH104.
RHRB05BX-B-UUM	=RHRB05BX-BUUMX.
RHRB05BX-BCO-LF	=RHRB05BX-BCOLFX+LOC-3G-1+2RH108.
RHRBPIPE-PIP-LFR	=RHRBPIPE-PIPLFRX.
RHRC003B-P-UUM	=RHRC003B-PUUMX.
RHRC003B-RUM-1	=RHRC003B-RUM1X.
RHRC02AA-P-NDUUM	=RHRC02AA-PNDUUMX.
RHRC02AA-P-UUM	=RHRC02AA-PUUMX.
RHRC02AA-PMS-LF	=RHRC02AA-PMSLFX+LOC-3I5.
RHRC02AA-RUM-1	=RHRC02AA-RUM1X.
RHRC02BB-P-NDUUM	=RHRC02BB-PNDUUMX.
RHRC02BB-P-UUM	=RHRC02BB-PUUMX.
RHRC02BB-PMS-LF	=RHRC02BB-PMSLFX+LOC-3I3.
RHRC02BB-RUM-1	=RHRC02BB-RUM1X.
RHRF03AA-VOC-CC	=RHRF03AA-VOCCCX+LOC-3G-1+LOC-4C1+LOC-3H5+2RH057+2RH058.
RHRF03AA-VOC-LF	=RHRF03AA-VOCLFX+LOC-3H5.
RHRF03BB-VOC-CC	=RHRF03BB-VOCCCX+LOC-3G-1+LOC-4C1+LOC-4E2-1+LOC-3H3+2RH061 +2RH062+2RH268.
RHRF03BB-VOC-LF	=RHRF03BB-VOCLFX+LOC-3H3.
RHRF04AA-V-UUM	=RHRF04AA-VUUMX.
RHRF04AA-VCO-CC	=RHRF04AA-VCOCCX+LOC-3I1+LOC-3G-1+LOC-4C1+LOC-4E2-2+2RH029 +2RH031.
RHRF04AA-VCO-LF	=RHRF04AA-VCOLFX+LOC-3I1.
RHRF04AA-VOC-CC	=RHRF04AA-VOCCCX+LOC-3G-1+LOC-4C1+LOC-3I1+LOC-4E2-2+2RH029 +2RH031.
RHRF04AA-VOC-LF	=RHRF04AA-VOCLFX+LOC-3I1.
RHRF04AA-VOO-CC	=RHRF04AA-VOOCCX+LOC-3I1+LOC-3G-1+LOC-4C1+LOC-4E2-2+2RH029 +2RH031.
RHRF04AA-VOO-LF	=RHRF04AA-VOOLFX+LOC-3I1.
RHRF04BB-V-UUM	=RHRF04BB-VUUMX.
RHRF04BB-VCO-CC	=RHRF04BB-VCOCCX+LOC-3I1+LOC-3G-1+LOC-4E2-1+LOC-4C1+2RH033 +2RH204+2RH035.
RHRF04BB-VCO-LF	=RHRF04BB-VCOLFX+LOC-3I1.

Table E.4 (Continued)

Component to Location and Associated Cable Transformation

Component	Transformation
RHRF04BB-VOC-CC	=RHRF04BB-VOCCCX+LOC-3G-1+LOC-4C1+LOC-4E2-1+LOC-3I1+2RH033 +2RH204+2RH035.
RHRF04BB-VOC-LF	=RHRF04BB-VOCLFX+LOC-3I1.
RHRF04BB-VOO-CC	=RHRF04BB-VOOCCX+LOC-3I1+LOC-3G-1+LOC-4E2-1+LOC-4C1+2RH033 +2RH204+2RH035.
RHRF04BB-VOO-LF	=RHRF04BB-VOOLFX+LOC-3I1.
RHRF24AA-V-UUM	=RHRF24AA-VUUMX.
RHRF24AA-VCC-CC	=RHRF24AA-VCCCCX+LOC-3G-1+LOC-4E2-2+LOC-4C1+LOC-3G-2+2RH105 +2RH106+2RH107.
RHRF24AA-VCC-LF	=RHRF24AA-VCCLFX+LOC-3G-2.
RHRF24AA-VCO-CC	=RHRF24AA-VCOCCX+LOC-3G-1+LOC-4E2-2+LOC-4C1+LOC-3G-2+2RH105 +2RH106+2RH107.
RHRF24AA-VCO-LF	=RHRF24AA-VCOLFX+LOC-3G-2.
RHRF24BB-V-UUM	=RHRF24BB-VUUMX.
RHRF24BB-VCC-CC	=RHRF24BB-VCCCCX+LOC-3G-1+LOC-4E2-1+LOC-4C1+LOC-3G-4+2RH109 +2RH332+2RH110+2RH111.
RHRF24BB-VCC-LF	=RHRF24BB-VCCLFX+LOC-3G-4.
RHRF24BB-VCO-CC	=RHRF24BB-VCOCCX+LOC-3G-1+LOC-4E2-1+LOC-4C1+LOC-3G-4+2RH109 +2RH332+2RH110+2RH111.
RHRF24BB-VCO-LF	=RHRF24BB-VCOLFX+LOC-3G-4.
RHRF27AA-VCO-CC	=RHRF27AA-VCOCCX+LOC-3G-1+LOC-4E2-2+LOC-4C1+LOC-3G-2+2RH135 +2RH136+2RH137.
RHRF27AA-VCO-LF	=RHRF27AA-VCOLFX+LOC-3G-2.
RHRF27BB-VCO-CC	=RHRF27BB-VCOCCX+LOC-3G-4+LOC-4E2-1+LOC-4C1+2RH139+2RH374 +2RH140+2RH141.
RHRF27BB-VCO-LF	=RHRF27BB-VCOLFX+LOC-3G-4.
RHRF31AX-CCC-LF	=RHRF31AX-CCCLFX.
RHRF31BX-CCC-LF	=RHRF31BX-CCCLFX.
RHRF47AA-RUM-1	=RHRF47AA-RUM1X.
RHRF47AA-V-UUM	=RHRF47AA-VUUMX.
RHRF47AA-VOC-CC	=RHRF47AA-VOCCCX+LOC-3G-1+LOC-4C1+LOC-3G-2+2RH041+2RH042.
RHRF47AA-VOC-LF	=RHRF47AA-VOCLFX+LOC-3G-2.
RHRF47BB-RUM-1	=RHRF47BB-RUM1X.
RHRF47BB-V-UUM	=RHRF47BB-VUUMX.
RHRF47BB-VOC-CC	=RHRF47BB-VOCCCX+LOC-3G-1+LOC-4C1+LOC-4E2-1+LOC-3G-4+2RH045 +2RH236+2RH046.
RHRF47BB-VOC-LF	=RHRF47BB-VOCLFX+LOC-3G-4.
RHRF48AA-V-UUM	=RHRF48AA-VUUMX.
RHRF48AA-VOC-CC	=RHRF48AA-VOCCCX+LOC-3G-1+LOC-4E2-2+LOC-4C1+LOC-3G-2+2RH049 +2RH050+2RH051.
RHRF48AA-VOC-LF	=RHRF48AA-VOCLFX+LOC-3G-2.

Table E.4 (Continued)

Component to Location and Associated Cable Transformation

Component	Transformation
RHRF48AA-VOO-CC	=RHRF48AA-VOOCCX+LOC-3G-1+LOC-4E2-2+LOC-4C1+LOC-3G-2+2RH049 +2RH050+2RH051.
RHRF48AA-VOO-LF	=RHRF48AA-VOOLFX+LOC-3G-2.
RHRF48BB-V-UUM	=RHRF48BB-VUUMX.
RHRF48BB-VOC-CC	=RHRF48BB-VOCCCX+LOC-3G-1+LOC-4E2-1+LOC-4C1+LOC-3H3+2RH053 +2RH237+2RH054+2RH055.
RHRF48BB-VOC-LF	=RHRF48BB-VOCLFX+LOC-3H3.
RHRF48BB-VOO-CC	=RHRF48BB-VOOCCX+LOC-3G-1+LOC-4E2-1+LOC-4C1+LOC-3H3+2RH053 +2RH237+2RH054+2RH055.
RHRF48BB-VOO-LF	=RHRF48BB-VOOLFX+LOC-3H3.
RHRF51AA-N-UUM	=RHRF51AA-NUUMX.
RHRF51AA-RUM-1	=RHRF51AA-RUM1X.
RHRF51BB-N-UUM	=RHRF51BB-NUUMX.
RHRF51BB-RUM-1	=RHRF51BB-RUM1X.
RHRF55AX-R-UUM	=RHRF55AX-RUUMX.
RHRF55AX-RUM-1	=RHRF55AX-RUM1X.
RHRF55BX-R-UUM	=RHRF55BX-RUUMX.
RHRF55BX-RUM-1	=RHRF55BX-RUM1X.
RHRF60AA-RUM-1	=RHRF60AA-RUM1X.
RHRF60AA-S-UUM	=RHRF60AA-SUUMX.
RHRF60BB-RUM-1	=RHRF60BB-RUM1X.
RHRF60BB-S-UUM	=RHRF60BB-SUUMX.
RHRF64AA-RUM-1	=RHRF64AA-RUM1X.
RHRF64AA-V-UUM	=RHRF64AA-VUUMX.
RHRF64BB-RUM-1	=RHRF64BB-RUM1X.
RHRF64BB-V-UUM	=RHRF64BB-VUUMX.
RHRF65AA-N-UUM	=RHRF65AA-NUUMX.
RHRF65AA-RUM-1	=RHRF65AA-RUM1X.
RHRF65BB-N-UUM	=RHRF65BB-NUUMX.
RHRF65BB-RUM-1	=RHRF65BB-RUM1X.
RHRF74AA-RUM-1	=RHRF74AA-RUM1X.
RHRF74AA-V-UUM	=RHRF74AA-VUUMX.
RHRF74BB-RUM-1	=RHRF74BB-RUM1X.
RHRF74BB-V-UUM	=RHRF74BB-VUUMX.
RHRF87AA-RUM-1	=RHRF87AA-RUM1X.
RHRF87AA-V-UUM	=RHRF87AA-VUUMX.
RHRF87AA-VCO-LF	=RHRF87AA-VCOLFX+LOC-3G-2.
RHRF87BB-RUM-1	=RHRF87BB-RUM1X.
RHRF87BB-V-UUM	=RHRF87BB-VUUMX.
RHRF87BB-VCO-CC	=RHRF87BB-VCOCCX+LOC-3F-2+LOC-4E2-1+LOC-4C1+LOC-3G-4+2RH231 +2RH232+2RH233.
RHRF87BB-VCO-LF	=RHRF87BB-VCOLFX+LOC-3G-4.

Table E.4 (Continued)

Component to Location and Associated Cable Transformation

Component	Transformation
RHRF88AX-R-UUM	=RHRF88AX-RUUMX.
RHRF88AX-RUM-1	=RHRF88AX-RUM1X.
RHRF88BX-R-UUM	=RHRF88BX-RUUMX.
RHRF88BX-RUM-1	=RHRF88BX-RUM1X.
RHRF98AX-XOC-LF	=RHRF98AX-XOCLFX.
RHRF98BX-XOC-LF	=RHRF98BX-XOCLFX.
RHRFU1AX-FUS-LF	=RHRFU1AX-FUSLFX+LOC-4E2-2+2RH276+2RH277.
RHRFU1BX-FUS-LF	=RHRFU1BX-FUSLFX+LOC-4E2-1+2RH257+2RH258.
RHRFU2AX-FUS-LF	=RHRFU2AX-FUSLFX+LOC-4E2-2.
RHRFU2BX-FUS-LF	=RHRFU2BX-FUSLFX+LOC-4E2-1.
RHRFUB1X-FUS-LF	=RHRFUB1X-FUSLFX+LOC-4E2-1.
RHRFUB2X-FUS-LF	=RHRFUB2X-FUSLFX+LOC-4E2-1.
RHRFUP1X-FUS-LF	=RHRFUP1X-FUSLFX+LOC-4E2-1.
RHRFUP2X-FUS-LF	=RHRFUP2X-FUSLFX+LOC-4E2-1.
RHRH01AX-H-UUM	=RHRH01AX-HUUMX.
RHRH01AX-HTX-LFB	=RHRH01AX-HTXLFBX.
RHRH01AX-HTX-LFI	=RHRH01AX-HTXLFIX.
RHRH01AX-RUM-1	=RHRH01AX-RUM1X.
RHRH01BX-H-UUM	=RHRH01BX-HUUMX.
RHRH01BX-HTX-LFB	=RHRH01BX-HTXLFBX.
RHRH01BX-HTX-LFI	=RHRH01BX-HTXLFIX.
RHRH01BX-RUM-1	=RHRH01BX-RUM1X.
RLOSP	=RLOSPX.
RPSA1F7A-FUS-LF	=RPSA1F7A-FUSLFX+LOC-4C1.
RPSA1K7A-LFO	=RPSA1K7ALFOX+LOC-4C1.
RPSA1K7AK8A-LFCO	=RPSA1K7AK8ALFCOX+LOC-4C1.
RPSA2F7C-FUS-LF	=RPSA2F7C-FUSLFX+LOC-4C1.
RPSA2K7C-LFO	=RPSA2K7CLFOX+LOC-4C1.
RPSA2K7CK8C-LFCO	=RPSA2K7CK8CLFCOX+LOC-4C1.
RPSB01AX-BCO	=RPSB01AXBCOX+LOC-4D4.
RPSB01BX-BCO	=RPSB01BXBCOX+LOC-4D4.
RPSB02AX-BCO	=RPSB02AXBCOX+LOC-4D4+2RP103.
RPSB02BX-BCO	=RPSB02BXBCOX+LOC-4D4+2RP109.
RPSB07AX-BCO	=RPSB07AXBCOX+LOC-4D4+2RP102.
RPSB07BX-BCO	=RPSB07BXBCOX+LOC-4D4+2RP113.
RPSB1F7B-FUS-LF	=RPSB1F7B-FUSLFX+LOC-4C1.
RPSB1K7B-LFO	=RPSB1K7BLFOX+LOC-4C1.
RPSB1K7BK8B-LFCO	=RPSB1K7BK8BLFCOX+LOC-4C1.
RPSB2F7D-FUS-LF	=RPSB2F7D-FUSLFX+LOC-4C1.
RPSB2K7D-LFO	=RPSB2K7DLFOX+LOC-4C1.
RPSB2K7DK8D-LFCO	=RPSB2K7DK8DLFCOX+LOC-4C1.
RPSBF35B-FUS-LF	=RPSBF35B-FUSLFX+LOC-4C1.

Table E.4 (Continued)

Component to Location and Associated Cable Transformation

Component	Transformation
RPSBUSA-120-LF	=RPSBUSA-120LFX+LOC-4D4+2RP590+2RP593+2RP094.
RPSBUSA-MGN-LF	=RPSBUSA-MGNLFX+LOC-4D4.
RPSBUSB-120-LF	=RPSBUSB-120LFX+LOC-4D4+2RP592+2RP595+2RP098.
RPSBUSB-MGN-LF	=RPSBUSB-MGNLFX+LOC-4D4.
RPSCBBSA-BCO	=RPSCBBSABCOX+LOC-4F2+2RP093.
RPSCBBSB-BCO	=RPSCBBSBBCOX+LOC-4E4+2RP097.
RPSF35BX-FUS-LFO	=RPSF35BX-FUSLFOX.
RPTB03AA-BCC-CC	=RPTB03AA-BCCCCX+LOC-4F2.
RPTB03AA-BCC-LF	=RPTB03AA-BCCLFX+LOC-4F2.
RPTB03BB-BCC-CC	=RPTB03BB-BCCCCX+LOC-4E4.
RPTB03BB-BCC-LF	=RPTB03BB-BCCLFX+LOC-4E4.
RTTTLSC-LFOC	=RTTTLSCLFOCX+LOC-3I4.
RWCB001X-B-UUM	=RWCB001X-BUUMX.
RWCB001X-BCO-LF	=RWCB001X-BCOLFX+LOC-3E+2RT028.
RWCF004X-VOO-CC	=RWCF004X-VOOCCX+LOC-4C1+LOC-4E2-2+LOC-3E+2RT030+2RT031 +2PC094+2RT029+2PC095+2PC097.
RWCF004X-VOO-LF	=RWCF004X-VOOLFX+LOC-3E.
SA31LSX-LSO-LFO	=SA31LSX-LSOLFOX+LOC-3B1.
SAK27RCX-RCC-LFO	=SAK27RCX-RCCLFOX+LOC-4E2-2.
SAK27RCXCP3-LFOO	=SAK27RCXCP3LFOOX+LOC-4E2-2.
SAK2ARCX-RCO-LFO	=SAK2ARCX-RCOLFOX+LOC-4C1.
SAK2ARCXCM1-LFOO	=SAK2ARCXCM1LFOOX+LOC-4C1.
SAK2BRCX-RCO-LFO	=SAK2BRCX-RCOLFOX+LOC-4C1.
SAK2BRCXCM1-LFOO	=SAK2BRCXCM1LFOOX+LOC-4C1.
SAK3ARCX-RCO-LFO	=SAK3ARCX-RCOLFOX+LOC-4C1.
SAK3BRCX-RCO-LFO	=SAK3BRCX-RCOLFOX+LOC-4C1.
SAK5ARCX-RCO-LFO	=SAK5ARCX-RCOLFOX+LOC-4C1.
SAK5ARCXCM1-LFOO	=SAK5ARCXCM1LFOOX+LOC-4C1.
SAK5BRCX-RCO-LFO	=SAK5BRCX-RCOLFOX+LOC-4C1.
SAK5BRCXCM1-LFOO	=SAK5BRCXCM1LFOOX+LOC-4C1.
SAK6ARCX-RCO-LFO	=SAK6ARCX-RCOLFOX+LOC-4C1.
SAK6ARCXCM3-LFOO	=SAK6ARCXCM3LFOOX+LOC-4C1.
SAK6BRCX-RCO-LFO	=SAK6BRCX-RCOLFOX+LOC-4C1.
SAK6BRCXCM3-LFOO	=SAK6BRCXCM3LFOOX+LOC-4C1.
SAMS1X-CSO-LFO	=SAMS1X-CSOLFOX+LOC-4C1.
SAMS1XCP11A-LFOO	=SAMS1XCP11ALFOOX+LOC-4C1.
SAMS1XCP11B-LFOO	=SAMS1XCP11BLFOOX+LOC-4C1.
SAMS1XCP7AX-LFOO	=SAMS1XCP7AXLFOOX+LOC-4C1.
SAMS1XCP7BX-LFOO	=SAMS1XCP7BXLFOOX+LOC-4C1.
SCS020AB-PIP-LFR	=SCS020AB-PIPLFRX.
SCS06DA6-PIP-LFR	=SCS06DA6-PIPLFRX.
SCS12A6B-PIP-LFR	=SCS12A6B-PIPLFRX.

Table E.4 (Continued)

Component to Location and Associated Cable Transformation

Component	Transformation
SCS12B6A-PIP-LFR	=SCS12B6A-PIPLFRX.
SCS1820T-PIP-LFR	=SCS1820T-PIPLFRX.
SCSB01AX-B-UUM	=SCSB01AX-BUUMX.
SCSB01AX-BCO-LF	=SCSB01AX-BCOLFX+LOC-3G-1+2RH142.
SCSB01BX-B-UUM	=SCSB01BX-BUUMX.
SCSB01BX-BCO-LF	=SCSB01BX-BCOLFX+LOC-3F-1+2RH146.
SCSB02AX-B-UUM	=SCSB02AX-BUUMX.
SCSB02AX-BCO-LF	=SCSB02AX-BCOLFX+LOC-3G-1+2RH112.
SCSB02BX-B-UUM	=SCSB02BX-BUUMX.
SCSB02BX-BCO-LF	=SCSB02BX-BCOLFX+LOC-3G-1+2RH115.
SCSB03XX-B-UUM	=SCSB03XX-BUUMX.
SCSB03XX-BOO-LF	=SCSB03XX-BOOLFX+LOC-3E+2RH166.
SCSB04XX-B-UUM	=SCSB04XX-BUUMX.
SCSB04XX-BCO-LF	=SCSB04XX-BCOLFX+LOC-3G-1+2RH162+2RH163.
SCSB05XX-B-UUM	=SCSB05XX-BUUMX.
SCSB05XX-BCO-LF	=SCSB05XX-BCOLFX+LOC-3G-1.
SCSF008A-V-UUM	=SCSF008A-VUUMX.
SCSF008A-VCC-CC	=SCSF008A-VCCCCX+LOC-3E+LOC-4C1+LOC-4E2-1+LOC-4E2-2+LOC-3F-1 +2RH726+2RH167+2RH378+2RH169+2RH168.
SCSF008A-VCC-LF	=SCSF008A-VCCLFX+LOC-3F-1.
SCSF009B-VCC-CC	=SCSF009B-VCCCCX+LOC-3J+LOC-3G-1+LOC-4E2-1+LOC-4C1+2RH165 +2RH164+2RH377+2RH235+2RH234.
SCSF009B-VCC-LF	=SCSF009B-VCCLFX+LOC-3J.
SCSF020X-XOC-LF	=SCSF020X-XOCLFX.
SCSF06AA-DENER	=SCSF06AADENERX.
SCSF06AA-RUM-1	=SCSF06AA-RUM1X.
SCSF06AA-V-NDUUM	=SCSF06AA-VNDUUMX.
SCSF06AA-V-UUM	=SCSF06AA-VUUMX.
SCSF06AA-V-UUM	=SCSF06AA-VUUMX.
SCSF06AA-VCC-CC	=SCSF06AA-VCCCCX+LOC-3I5+LOC-3G-1+LOC-4E2-1+LOC-4C1+2RH113 +2RH333+2RH114.
SCSF06AA-VCC-LF	=SCSF06AA-VCCLFX+LOC-3I5.
SCSF06AA-VCO-CC	=SCSF06AA-VCOCCX+LOC-3G-1+LOC-4E2-1+LOC-4C1+LOC-3I5+2RH113 +2RH333+2RH114.
SCSF06AA-VCO-LF	=SCSF06AA-VCOLFX+LOC-3I5.
SCSF06BB-DENER	=SCSF06BBDENERX.
SCSF06BB-RUM-1	=SCSF06BB-RUM1X.
SCSF06BB-V-NDUUM	=SCSF06BB-VNDUUMX.
SCSF06BB-V-UUM	=SCSF06BB-VUUMX.
SCSF06BB-V-UUM	=SCSF06BB-VUUMX.
SCSF06BB-VCC-CC	=SCSF06BB-VCCCCX+LOC-3I3+LOC-3G-1+LOC-4E2-1+LOC-4C1+2RH116 +2RH350+2RH117.

Table E.4 (Continued)

Component to Location and Associated Cable Transformation

Component	Transformation
SCSF06BB-VCC-LF	=SCSF06BB-VCCLFX+LOC-3I3.
SCSF06BB-VCO-CC	=SCSF06BB-VCOCCX+LOC-3G-1+LOC-4E2-1+LOC-4C1+LOC-3I3+2RH116 +2RH350+2RH117.
SCSF06BB-VCO-LF	=SCSF06BB-VCOLFX+LOC-3I3.
SCSF23AA-VCO-CC	=SCSF23AA-VCOCCX+LOC-3E+LOC-4E2-2+LOC-4C1+LOC-3F-1+2RH175 +2RH176+2RH177.
SCSF23AA-VCO-LF	=SCSF23AA-VCOLFX+LOC-3F-1.
SCSF50AX-CCC-LF	=SCSF50AX-CCCLFX.
SCSF50BX-CCC-LF	=SCSF50BX-CCCLFX.
SCSF53AA-V-UUM	=SCSF53AA-VUUMX.
SCSF53AA-VCC-CC	=SCSF53AA-VCCCCX+LOC-3G-1+LOC-4E2-2+LOC-4C1+LOC-3F-1+2RH143 +2RH144+2RH145.
SCSF53AA-VCC-LF	=SCSF53AA-VCCLFX+LOC-3F-1.
SCSF53AA-VCO-CC	=SCSF53AA-VCOCCX+LOC-3G-1+LOC-4E2-2+LOC-4C1+LOC-3F-1+2RH143 +2RH144+2RH145.
SCSF53AA-VCO-LF	=SCSF53AA-VCOLFX+LOC-3F-1.
SCSF53BB-V-UUM	=SCSF53BB-VUUMX.
SCSF53BB-VCC-CC	=SCSF53BB-VCCCCX+LOC-3G-1+LOC-4E2-1+LOC-4E2-2+LOC-4C1 +LOC-3F-1+2RH147+2RH375+2RH148+2RH149.
SCSF53BB-VCC-LF	=SCSF53BB-VCCLFX+LOC-3F-1.
SCSF53BB-VCO-CC	=SCSF53BB-VCOCCX+LOC-3G-1+LOC-4E2-2+LOC-4C1+LOC-4E2-1 +LOC-3F-1+2RH147+2RH375+2RH148+2RH149.
SCSF53BB-VCO-LF	=SCSF53BB-VCOLFX+LOC-3F-1.
SCSF67CX-XCO-LF	=SCSF67CX-XCOLFX.
SCSF67CX-XCO-OE	=SCSF67CX-XCOOEX.
SCSF90AX-XOC-LF	=SCSF90AX-XOCLFX.
SCSF90BX-XOC-LF	=SCSF90BX-XOCLFX.
SEVB001X-B-UUM	=SEVB001X-BUUMX.
SEVB001X-BCO-LF	=SEVB001X-BCOLFX+LOC-3G-1+2VY012.
SEVDCT0A-DCT-LFR	=SEVDCT0A-DCTLFRX.
SEVY03AX-A-UUM	=SEVY03AX-AUUMX.
SEVY03AX-ACX-LFI	=SEVY03AX-ACXLFIX.
SEVY03CB-F-UUM	=SEVY03CB-FUUMX.
SEVY03CB-FMS-CC	=SEVY03CB-FMSCCX+LOC-3G-1+LOC-3H1+LOC-4E4+LOC-3H3+2VY013 +2VY103+2VY047+2VY046+2VY048.
SEVY03CB-FMS-LF	=SEVY03CB-FMSLFX+LOC-3H1.
SF1ALSX-LSO-LFO	=SF1ALSX-LSOLFOX+LOC-3B1-1.
SF1BLSX-LSO-LFO	=SF1BLSX-LSOLFOX+LOC-3B1-1.
SLC0000X-QOO-OE	=SLC0000X-QOOOEX+LOC-4C1.
SLCA001X-T-UUM	=SLCA001X-TUUMX.
SLCA001X-TNK-HTR	=SLCA001X-TNKHTRX.
SLCA001X-TNK-LF	=SLCA001X-TNKLFX.

Table E.4 (Continued)

Component to Location and Associated Cable Transformation

Component	Transformation
SLCB001X-B-UUM	=SLCB001X-BUUMX.
SLCB001X-BCO-LF	=SLCB001X-BCOLFX+LOC-3F-1+2SC010.
SLCB002X-B-UUM	=SLCB002X-BUUMX.
SLCB002X-BCO-LF	=SLCB002X-BCOLFX+LOC-3F-2+2SC018.
SLCB003X-B-UUM	=SLCB003X-BUUMX.
SLCB003X-BCO-LF	=SLCB003X-BCOLFX+LOC-3F-1+2SC028.
SLCB003X-RUM-O	=SLCB003X-RUMOX.
SLCB004X-B-UUM	=SLCB004X-BUUMX.
SLCB004X-BCO-LF	=SLCB004X-BCOLFX+LOC-3F-2+2SC031.
SLCB004X-RUM-O	=SLCB004X-RUMOX.
SLCB005X-B-UUM	=SLCB005X-BUUMX.
SLCB005X-BCO-LF	=SLCB005X-BCOLFX+LOC-3D.
SLCB006X-B-UUM	=SLCB006X-BUUMX.
SLCB006X-BCO-LF	=SLCB006X-BCOLFX+LOC-3F-1+2SC024.
SLCC001A-P-TO001	=SLCC001A-PTO001X.
SLCC001A-P-UUM	=SLCC001A-PUUMX.
SLCC001A-PMS-CC	=SLCC001A-PMSCCX+LOC-4C1+LOC-3F-1+LOC-3B1-1+2SC012.
SLCC001A-PMS-LF	=SLCC001A-PMSLFX+LOC-3B1-1.
SLCC001A-RO001-1	=SLCC001A-RO0011X.
SLCC001A-RO001-2	=SLCC001A-RO0012X.
SLCC001A-RO001-3	=SLCC001A-RO0013X.
SLCC001A-RO00105	=SLCC001ARO00105X.
SLCC001B-P-UUM	=SLCC001B-PUUMX.
SLCC001B-PMS-CC	=SLCC001B-PMSCCX+LOC-4C1+LOC-3F-2+LOC-3B1-1+2SC020.
SLCC001B-PMS-LF	=SLCC001B-PMSLFX+LOC-3B1-1.
SLCC001B-QOO-OE	=SLCC001B-QOOOEX+LOC-4C1.
SLCF001A-VCC-CC	=SLCF001A-VCCCCX+LOC-4C1+LOC-3B1+LOC-3F-1+LOC-3B1-1+2SC029 +2SC030+2SC039+2SC042+2SC046+2SC041.
SLCF001A-VCC-LF	=SLCF001A-VCCLFX+LOC-3B1-1.
SLCF001B-VCC-CC	=SLCF001B-VCCCCX+LOC-4C1+LOC-3B1+LOC-3F-2+LOC-3B1-1+2SC032 +2SC033+2SC040+2SC044+2SC047+2SC043.
SLCF001B-VCC-LF	=SLCF001B-VCCLFX+LOC-3B1-1.
SLCF002A-XOC-LF	=SLCF002A-XOCLFX.
SLCF002B-XOC-LF	=SLCF002B-XOCLFX.
SLCF003A-XOC-LF	=SLCF003A-XOCLFX.
SLCF003B-XOC-LF	=SLCF003B-XOCLFX.
SLCF004A-VCC-CC	=SLCF004A-VCCCCX+LOC-4C1+LOC-3B1-1+2SC050.
SLCF004A-VCC-LF	=SLCF004A-VCCLFX+LOC-3B1-1.
SLCF004B-VCC-CC	=SLCF004B-VCCCCX+LOC-4C1+LOC-3B1-1+2SC023.
SLCF004B-VCC-LF	=SLCF004B-VCCLFX+LOC-3B1-1.
SLCF006X-CCC-LF	=SLCF006X-CCCLFX.
SLCF007X-CCC-LF	=SLCF007X-CCCLFX.

Table E.4 (Continued)

Component to Location and Associated Cable Transformation

Component	Transformation
SLCF008X-XOC-LF	=SLCF008X-XOCLFX.
SLCF015X-XCO-LF	=SLCF015X-XCOLFX.
SLCF016A-XCO-LF	=SLCF016A-XCOLFX.
SLCF017A-XCO-LF	=SLCF017A-XCOLFX.
SLCF029A-R-UUM	=SLCF029A-RUUMX.
SLCF029A-RCO-LFM	=SLCF029A-RCOLFMX.
SLCF029B-R-UUM	=SLCF029B-RUUMX.
SLCF029B-RCO-LFM	=SLCF029B-RCOLFMX.
SLCF031X-XCO-LF	=SLCF031X-XCOLFX.
SLCF033A-CCC-LF	=SLCF033A-CCCLFX.
SLCF033B-CCC-LF	=SLCF033B-CCCLFX.
SLCF304X-XCO-LF	=SLCF304X-XCOLFX.
SLCF306X-XCO-LF	=SLCF306X-XCOLFX.
SLCPSC02-PIP-HTR	=SLCPSC02-PIPHTRX.
SLCPSC02-PIP-LFB	=SLCPSC02-PIPLFBX.
SLCPSC02-PIP-LFR	=SLCPSC02-PIPLFRX.
SLCPSC03-PIP-LFR	=SLCPSC03-PIPLFRX.
SLCPSCD1-PIP-LFR	=SLCPSCD1-PIPLFRX.
SLCPSCM1-PIP-LFR	=SLCPSCM1-PIPLFRX.
SLCPSCM2-PIP-LFR	=SLCPSCM2-PIPLFRX.
SLCPSCM3-PIP-LFR	=SLCPSCM3-PIPLFRX.
SLCS4AEX-RUM-0	=SLCS4AEX-RUM0X.
SLCS4AEX-V-UUM	=SLCS4AEX-VUUMX.
SLCS4AHX-RUM-0	=SLCS4AHX-RUM0X.
SLCS4AHX-V-UUM	=SLCS4AHX-VUUMX.
SLOCA-IE	=SLOCAIEX.
SPC18A5X-PIP-LFR	=SPC18A5X-PIPLFRX.
SPC18B5X-PIP-LFR	=SPC18B5X-PIPLFRX.
SWVB001X-B-UUM	=SWVB001X-BUUMX.
SWVB001X-BCO-LF	=SWVB001X-BCOLFX+LOC-5D2+2VY018.
SWVDCT0A-DCT-LFR	=SWVDCT0A-DCTLFRX.
SWVY02AX-A-UUM	=SWVY02AX-AUUMX.
SWVY02AX-ACX-LFI	=SWVY02AX-ACXLFIX.
SWVY02CC-F-UUM	=SWVY02CC-FUUMX.
SWVY02CC-FMS-CC	=SWVY02CC-FMSCCX+LOC-5D2+LOC-3H1+LOC-3H2+2VY019+2VY052 +2VY053.
SWVY02CC-FMS-LF	=SWVY02CC-FMSLFX+LOC-3H1.
SY-CCWE-IAS01CAX	=SY-CCWEIAS01CAXX+LOC-5C11+LOC-5B4+LOC-LSH.
SY-CCWE-IAS01CCX	=SY-CCWEIAS01CCXX+LOC-5C11+LOC-5B4+LOC-LSH.
SY-CCWP-GLANDWAT	=SY-CCWPGLANDWATX.
SY-LUBE-IAS01CAX	=SY-LUBEIAS01CAXX+LOC-5C11+LOC-5B4+LOC-LSH.
SY-LUBE-IAS01CCX	=SY-LUBEIAS01CCXX+LOC-5C11+LOC-5B4+LOC-LSH.

Table E.4 (Continued)

Component to Location and Associated Cable Transformation

Component	Transformation
SY-PHPN-IAS004AX	=SY-PHPNIAS004AXX+LOC-5C11.
SY-PHPN-IAS004BX	=SY-PHPNIAS004BXX+LOC-5C11.
SY-PHPN-IAS004CX	=SY-PHPNIAS004CXX+LOC-5C11.
SY-REGP-RCIC001X	=SY-REGPRCIC001XX+LOC-4C1+LOC-4E2-2+LOC-4E2-1+LOC-3I4+2RI080 +2RI082+2RI081+2RI132+2RI268+2RI133+2RI088+2RI134+2RI136 +2RI104+2RI186+2RI185+2RI138+2RI139+2RI116+2RI269+2RI042 +2RI086+2RI083+2RI135+2RI130+2RI131+2RI187.
SYS-VLVS-P-TD001	=SYS-VLVS-PTD001X.
T1-IE	=T1IEX.
T101-IE	=T101IEX.
T102-IE	=T102IEX.
T11-IE	=T11IEX.
T12-IE	=T12IEX.
T13-IE	=T13IEX.
T14-IE	=T14IEX.
T15A-IE	=T15AIEX.
T15B-IE	=T15BIEX.
T2-IE	=T2IEX.
T3-IE	=T3IEX.
T4-IE	=T4IEX.
T5-IE	=T5IEX.
T5CDS50PERCENT	=T5CDS50PERCENTX.
T5MFS50PERCENT	=T5MFS50PERCENTX.
T7-IE	=T7IEX.
T9A-IE	=T9AIEX.
T9B-IE	=T9BIEX.
TCO0001X-PIP-LFR	=TCO0001X-PIPLFRX.
TCO0049X-CCC-LF	=TCO0049X-CCCLFX.
TCO0050X-CCC-LF	=TCO0050X-CCCLFX.
TCO011PB-M-UUM	=TCO011PB-MUUMX.
TCO011PB-PMS-CC	=TCO011PB-PMSCCX+LOC-5B3+LOC-5B4+LOC-4C1+2FW222+2FW223.
TCO011PB-PMS-LF	=TCO011PB-PMSLFX+LOC-5B3.
TCOB011P-B-UUM	=TCOB011P-BUUMX.
TCOB011P-BOO-CC	=TCOB011P-BOOCCX.
TCOB011P-BOO-LF	=TCOB011P-BOOLFX+LOC-5B6+2FW221.
TCW001AX-COC-LF	=TCW001AX-COCLFX.
TCW001BX-COC-LF	=TCW001BX-COCLFX.
TCW002AX-XOC-LF	=TCW002AX-XOCLFX.
TCW002BX-XOC-LF	=TCW002BX-XOCLFX.
TCW005AX-XOC-LF	=TCW005AX-XOCLFX.
TCW006AX-XOC-LF	=TCW006AX-XOCLFX.
TCW007AX-XOC-LF	=TCW007AX-XOCLFX.

Table E.4 (Continued)

Component to Location and Associated Cable Transformation

Component	Transformation
TCW007BX-XOC-LF	=TCW007BX-XOCLFX.
TCW019AX-XOC-LF	=TCW019AX-XOCLFX.
TCW019BX-XOC-LF	=TCW019BX-XOCLFX.
TCW019CX-XOC-LF	=TCW019CX-XOCLFX.
TCW019DX-XOC-LF	=TCW019DX-XOCLFX.
TCW01AAX-HTX-LFB	=TCW01AAX-HTXLFBX.
TCW01AAX-HTX-LFI	=TCW01AAX-HTXLFIX.
TCW01PAD-PMS-FR	=TCW01PAD-PMSFRX+LOC-5B4.
TCW01PBE-PMS-FR	=TCW01PBE-PMSFRX+LOC-5B4.
TCW01TXX-TNK-LF	=TCW01TXX-TNKLFX.
TCW029XX-XOC-LF	=TCW029XX-XOCLFX.
TCW02AXX-HTX-LFB	=TCW02AXX-HTXLFBX.
TCW02AXX-HTX-LFI	=TCW02AXX-HTXLFIX.
TCW02PXD-PMS-FR	=TCW02PXD-PMSFRX+LOC-5C11.
TCW030XX-XOC-LF	=TCW030XX-XOCLFX.
TCW031XX-XOC-LF	=TCW031XX-XOCLFX.
TCW032XX-XOC-LF	=TCW032XX-XOCLFX.
TCW034XD-SOC-LF	=TCW034XD-SOCLFX+LOC-5C11+2SA035.
TCW035XX-XOC-LF	=TCW035XX-XOCLFX.
TCW057XX-XCO-LF	=TCW057XX-XCOLFX.
TCW058XX-XOC-LF	=TCW058XX-XOCLFX.
TCW087XX-POC-LF	=TCW087XX-POCLFX+LOC-5C11.
TCW088XX-XOC-LF	=TCW088XX-XOCLFX.
TCW106XX-XOC-LF	=TCW106XX-XOCLFX.
TCW107XX-XOC-LF	=TCW107XX-XOCLFX.
TCW129AX-XOC-LF	=TCW129AX-XOCLFX.
TCW129BX-XOC-LF	=TCW129BX-XOCLFX.
TCW129CX-XOC-LF	=TCW129CX-XOCLFX.
TCW129DX-XOC-LF	=TCW129DX-XOCLFX.
TCW156XD-SOC-LF	=TCW156XD-SOCLFX+LOC-5C11+2SA017.
TCW162XX-XOC-LF	=TCW162XX-XOCLFX.
TCW163XX-COC-LF	=TCW163XX-COCLFX.
TCW164XX-XOC-LF	=TCW164XX-XOCLFX.
TCW165XX-XOC-LF	=TCW165XX-XOCLFX.
TCW170XX-FOC-LF	=TCW170XX-FOCLFX+LOC-5C11.
TCW171XX-FOC-LF	=TCW171XX-FOCLFX+LOC-5C11.
TCWBP1AD-BCO-AS	=TCWBP1AD-BCOASX+LOC-5C11+LOC-4C1+2WT011.
TCWBP1AD-BCO-LF	=TCWBP1AD-BCOLFX+LOC-5C11+2WT010.
TCWBP2BE-BCO-AS	=TCWBP2BE-BCOASX+LOC-5B4+LOC-4C1+2WT014.
TCWBP2BE-BCO-LF	=TCWBP2BE-BCOLFX+LOC-5B4+2WT013.
TCWBP3XD-BCO-AS	=TCWBP3XD-BCOASX+LOC-6D+LOC-5C11+2WT025.
TCWBP3XD-BCO-LF	=TCWBP3XD-BCOLFX+LOC-6D+2WT026.

Table E.4 (Continued)

Component to Location and Associated Cable Transformation

Component	Transformation
TCWPSTA5-PIP-LFR	=TCWPSTA5-PIPLFRX.
TCWPSTB2-PIP-LFR	=TCWPSTB2-PIPLFRX.
TCWPSTIA-PIP-LFR	=TCWPSTIA-PIPLFRX.
TCWPSTOA-PIP-LFR	=TCWPSTOA-PIPLFRX.
TDRFP-T-OE-O	=TDRFP-T-OEOX+LOC-4C1.
TFS030AA-FUS-LF	=TFS030AA-FUSLFX+LOC-4F2.
TFS030BB-FUS-LF	=TFS030BB-FUSLFX+LOC-4E4.
TFS031AA-FUS-LF	=TFS031AA-FUSLFX+LOC-4F2.
TFS031BB-FUS-LF	=TFS031BB-FUSLFX+LOC-4E4.
TFS110AA-FUS-LF	=TFS110AA-FUSLFX+LOC-4C1.
TFS110BB-FUS-LF	=TFS110BB-FUSLFX+LOC-4C1.
TFS210AA-FUS-LF	=TFS210AA-FUSLFX+LOC-4C1.
TFS210BB-FUS-LF	=TFS210BB-FUSLFX+LOC-4C1.
TFS310AA-FUS-LF	=TFS310AA-FUSLFX+LOC-4F2.
TFS310BB-FUS-LF	=TFS310BB-FUSLFX+LOC-4E4.
TFS410AA-FUS-LF	=TFS410AA-FUSLFX+LOC-4F2.
TFS410BB-FUS-LF	=TFS410BB-FUSLFX+LOC-4E4.
TLO0001X-PIP-LFR	=TLO0001X-PIPLFRX.
TLO0041X-CCC-LF	=TLO0041X-CCCLFX.
TLO0042X-CCC-LF	=TLO0042X-CCCLFX.
TLO0043X-CCC-LF	=TLO0043X-CCCLFX.
TLO0044X-CCC-LF	=TLO0044X-CCCLFX.
TLO0054X-XOC-LF	=TLO0054X-XOCLFX.
TLO0056X-NOC-LF	=TLO0056X-NOCLFX+LOC-5A2-1.
TLO0057X-NOC-LF	=TLO0057X-NOCLFX+LOC-5A2-1.
TLO0058X-NOC-LF	=TLO0058X-NOCLFX+LOC-5A2-2.
TLO0059X-NOC-LF	=TLO0059X-NOCLFX+LOC-5A2-2.
TLO0060X-XOC-LF	=TLO0060X-XOCLFX.
TLO0061X-XOC-LF	=TLO0061X-XOCLFX.
TLO009PA-M-UUM	=TLO009PA-MUUMX.
TLO009PA-PMS-CC	=TLO009PA-PMSCCX+LOC-5B3+LOC-4E4+LOC-4C1.
TLO009PA-PMS-LF	=TLO009PA-PMSLFX+LOC-5B3.
TLO010PB-M-UUM	=TLO010PB-MUUMX.
TLO010PB-PMS-CC	=TLO010PB-PMSCCX+LOC-5B3+LOC-5B6+LOC-4C1.
TLO010PB-PMS-LF	=TLO010PB-PMSLFX+LOC-5B3.
TLOB009P-B-UUM	=TLOB009P-BUUMX.
TLOB009P-BOO-CC	=TLOB009P-BOOCCX.
TLOB009P-BOO-LF	=TLOB009P-BOOLFX+LOC-4F2.
TLOB010P-B-UUM	=TLOB010P-BUUMX.
TLOB010P-BOO-CC	=TLOB010P-BOOCCX.
TLOB010P-BOO-LF	=TLOB010P-BOOLFX+LOC-5B6.
TLOTANK-TNK-LF	=TLOTANK-TNKLFX.

Table E.4 (Continued)

Component to Location and Associated Cable Transformation

Component	Transformation
TLSN36AA-ASL-FSL	=TLSN36AA-ASLFSLX.
TLSN36AA-ASL-LFO	=TLSN36AA-ASLLFOX+LOC-3E.
TLSN36BB-ASL-FSL	=TLSN36BB-ASLFSLX.
TLSN36BB-ASL-LFO	=TLSN36BB-ASLLFOX+LOC-3E.
TLSN36CA-ASL-FSL	=TLSN36CA-ASLFSLX.
TLSN36CA-ASL-LFO	=TLSN36CA-ASLLFOX+LOC-3E.
TLSN36CB-ASL-FSL	=TLSN36CB-ASLFSLX.
TLSN36CB-ASL-LFO	=TLSN36CB-ASLLFOX+LOC-3E.
TOC01AAX-HTX-LFB	=TOC01AAX-HTXLFBX.
TOC01AAX-HTX-LFI	=TOC01AAX-HTXLFIX.
TPSN45AA-ASP-FSL	=TPSN45AA-ASPFSLX.
TPSN45AA-ASP-LFO	=TPSN45AA-ASPLFOX+LOC-3E.
TPSN45BB-ASP-FSL	=TPSN45BB-ASPFSLX.
TPSN45BB-ASP-LFO	=TPSN45BB-ASPLFOX+LOC-3E.
TPSN45CA-ASP-FSL	=TPSN45CA-ASPFSLX.
TPSN45CA-ASP-LFO	=TPSN45CA-ASPLFOX+LOC-3E.
TPSN45CB-ASP-FSL	=TPSN45CB-ASPFSLX.
TPSN45CB-ASP-LFO	=TPSN45CB-ASPLFOX+LOC-3E.
TR135XD2-TFM-LF	=TR135XD2-TFMLFX+LOC-4F1.
TR235XD2-TFM-LF	=TR235XD2-TFMLFX+LOC-4F2.
TR2431E2-TFM-LF	=TR2431E2-TFMLFX+LOC-5D2.
TR36X2E2-TFM-LF	=TR36X2E2-TFMLFX+LOC-4E4.
TRL101AA-ROO-LFO	=TRL101AA-ROOLFOX+LOC-4E2-1+2RR087.
TRL101AACM1-LFOO	=TRL101AACM1LFOOX+LOC-4E2-1.
TRL101BB-ROO-LFO	=TRL101BB-ROOLFOX+LOC-4E2-1+2RR298.
TRL101BBCM1-LFOO	=TRL101BBCM1LFOOX+LOC-4E2-1.
TRL101CA-ROO-LFO	=TRL101CA-ROOLFOX+LOC-4E2-1+2RR086.
TRL101CACM1-LFOO	=TRL101CACM1LFOOX+LOC-4E2-1.
TRL101CB-ROO-LFO	=TRL101CB-ROOLFOX+LOC-4E2-1+2RR297.
TRL101CBCM1-LFOO	=TRL101CBCM1LFOOX+LOC-4E2-1.
TRL147AA-ROO-LFO	=TRL147AA-ROOLFOX+LOC-4E2-1+LOC-3F-1+LOC-3D+2RR017+2RR247 +2RR273.
TRL147AACM3-LFOO	=TRL147AACM3LFOOX+LOC-4E2-1.
TRL147BB-ROO-LFO	=TRL147BB-ROOLFOX+LOC-4E2-1+LOC-3G-1+LOC-4E4+LOC-3B1+2RR025 +2RR251+2RR329.
TRL147BBCM3-LFOO	=TRL147BBCM3LFOOX+LOC-4E2-1.
TRLAU2AA-ROO-LFO	=TRLAU2AA-ROOLFOX+LOC-4C1.
TRLAU2AACP3-LFOO	=TRLAU2AACP3LFOOX+LOC-4C1.
TRLAU2BB-ROO-LFO	=TRLAU2BB-ROOLFOX+LOC-4C1.
TRLAU2BBCP3-LFOO	=TRLAU2BBCP3LFOOX+LOC-4C1.
TRN-A-SCSMODE	=TRN-ASCSMODEX.
TRN-AORB-SCSMODE	=TRN-AORBSCSMODEX.

Table E.4 (Concluded)

Component to Location and Associated Cable Transformation

Component	Transformation
TRN-B-SCSMODE	=TRN-BSCSMODEX.
TS112AXCP3-LFCO	=TS112AXCP3LFCOX+LOC-4E2-1.
TS112AXCP7-LFCO	=TS112AXCP7LFCOX+LOC-4E2-1.
TS112BXCP3-LFCO	=TS112BXCP3LFCOX+LOC-4E2-1.
TS112BXCP7-LFCO	=TS112BXCP7LFCOX+LOC-4E2-1.
UUFWNPSH-CAL-LFO	=UUFWNPSH-CALLFOX+LOC-5D4.
ZSCD028X-ASO-LFO	=ZSCD028X-ASOLFOX+LOC-5D4+2CD053.

APPENDIX F

TEMAC Code Output

F.0 INTRODUCTION

This appendix is composed of computer output from the TEMAC code and contains the following information for each individual fire scenario analyzed and for the global calculation (which combines all the accident scenarios together and calculates a total core damage frequency from fire initiators): (1) descriptive statistics for the distribution of the frequency of the accident, (2) risk reduction statistics for each event contributing to the accident (i.e., if an event can not occur by how much is the accident frequency reduced), (3) risk increase statistics for each event contributing to the accident (i.e., if an event is certain to occur by how much is the accident frequency increased), (4) the uncertainty importance of each event contributing to the accident (i.e., how much does the uncertainty in the failure data for an event contribute to the uncertainty in the accident frequency), and (5) a listing of the cut sets for each scenario with point estimates using mean values for the cut set frequencies and a cumulative total percentage of the accident frequency explained by the cut sets up to that point.

The five events LAMDA-TB, -CSR, -AUX, -CR, and -SVGR represent fire initiating events. Technically one should not perform the risk increase calculation for initiating events since they are not probabilities but frequencies and can have values greater than 1.0. They are included in the risk increase calculations due to an error in labeling the event names in the TEMAC input. They should all start with "IE-". This error is corrected in Volume 2 of this report which presents the integrated results. The error has no effect on the calculation in this instance because the frequencies are less than 1.0.

The order of the tables is:

Calculation	Page
Global Calculation	F-3
Fire Scenario AA	F-37
Fire Scenario AC	F-44
Fire Scenario CR	F-57
Fire Scenario E-S2	F-62
Fire Scenario E-S3	F-68
Fire Scenario N	F-73
Fire Scenario P	F-86
Fire Scenario S-AA	F-105
Fire Scenario S-W	F-112
Fire Scenario T	F-125
Fire Scenario W1	F-133
Fire Scenario W2	F-146
Fire Scenario Y1	F-159
Fire Scenario Y2	F-172
Fire Scenario Z	F-185

TOTAL FIRE SEQUENCE

TOP EVENT FIRETOT CONTAINS 197 EVENTS IN 1337 CUT SETS

THE FREQUENCY OF TOP EVENT FIRETOT IS 3.38E-05

DESCRIPTIVE STATISTICS FOR THE FREQUENCY OF TOP EVENT FIRETOT

N	400
MEAN	3.21E-05
STD DEV	1.72E-04
LOWER 5%	1.32E-07
LOWER 25%	5.88E-07
MEDIAN	1.99E-06
UPPER 25%	7.10E-06
UPPER 5%	5.94E-05

90% UNCERTAINTY INTERVAL FOR TOP EVENT FREQUENCY (INNERMOST BRACKETS DENOTE INTERQUARTILE RANGE, ASTERISK DENOTES MEDIAN, N DENOTES NOMINAL VALUE AND M DENOTES MEAN)

NOMENCLATURE:

PD = PARTIAL DERIVATIVE

TEF = FREQUENCY OF THE TOP EVENT

EV(J) = PROBABILITY OF EVENT J FOR BASE EVENTS
= FREQUENCY OF EVENT J FOR INITIATING EVENTS

MEASURES:

1. FOR BASE EVENTS AND INITIATING EVENTS:

RISK REDUCTION = PD x EV(J)
= TEF - TEF(EVALUATED WITH EV(J) = 0)

2. FOR BASE EVENTS ONLY:

RISK INCREASE = PD - RISK REDUCTION
= PD x (1 - EV(J))
= TEF(EVALUATED WITH EV(J) = 1) - TEF

TOTAL FIRE SEQUENCE
RISK REDUCTION BY BASE EVENT (WITH ASSOCIATED UNCERTAINTY INTERVALS)

BASE EVENT	OCCUR	PROB	(RANK)	RISK REDUCTION	(RANK)	LOWER 5%	UPPER 5%
R-OP-1	1	6.40E-02	(40.5)	2.18E-05	(2.0)	6.18E-14	3.67E-06
LAMBDA-CR	1	3.40E-03	(60.0)	2.18E-05	(2.0)	6.18E-14	3.67E-06
FR	1	1.00E-01	(35.0)	2.18E-05	(2.0)	6.18E-14	3.67E-06
FS2	827	3.00E-01	(25.5)	9.32E-06	(4.0)	6.04E-08	4.21E-05
SUR-002-L	650	1.60E-01	(29.0)	8.80E-06	(5.0)	0.00E+00	4.31E-05
LAMBDA-SVGR	468	1.40E-02	(53.0)	7.90E-06	(6.0)	0.00E+00	3.07E-05
CONT-LEAK	1298	7.50E-01	(23.0)	7.81E-06	(7.0)	0.00E+00	4.31E-05
Q6TG	114	9.80E-01	(12.5)	3.77E-06	(8.5)	0.00E+00	1.35E-05
FA6	114	1.80E-01	(27.0)	3.77E-06	(8.5)	0.00E+00	1.35E-05
LAMBDA-AUX	719	5.40E-02	(43.0)	3.37E-06	(10.0)	5.23E-08	1.79E-05
SUR-007-V	18	8.70E-02	(36.0)	2.74E-06	(11.0)	8.39E-08	9.83E-06
Q8TG	120	9.50E-01	(16.5)	2.74E-06	(12.5)	0.00E+00	7.90E-06
FA7	120	1.30E-01	(31.0)	2.74E-06	(12.5)	0.00E+00	7.90E-06
FAT	53	6.80E-02	(39.0)	2.25E-06	(15.0)	4.48E-08	7.78E-06
FA5	53	8.40E-01	(20.0)	2.25E-06	(15.0)	4.48E-08	7.78E-06
Q4TG	53	8.20E-01	(22.0)	2.25E-06	(15.0)	4.48E-08	7.78E-06
FR1	234	1.00E-02	(54.5)	1.40E-06	(17.0)	0.00E+00	3.73E-06
RHRH01BX-HTX-LFB	15	6.20E-03	(56.5)	1.05E-06	(18.0)	2.60E-09	4.16E-06
RHRH01AX-HTX-LFB	16	6.20E-03	(56.5)	7.24E-07	(19.0)	0.00E+00	3.18E-06
Q7TG	120	9.50E-01	(16.5)	7.01E-07	(20.0)	0.00E+00	1.91E-06
Q5TG	114	9.80E-01	(12.5)	6.98E-07	(21.0)	0.00E+00	1.87E-06
FS1	35	1.70E-01	(28.0)	6.40E-07	(24.0)	9.51E-09	2.53E-06
FAE	35	3.80E-03	(59.0)	6.40E-07	(24.0)	9.51E-09	2.53E-06
LAMBDA-TB	35	3.70E-02	(46.0)	6.40E-07	(24.0)	9.51E-09	2.53E-06
FA1	35	3.00E-01	(25.5)	6.40E-07	(24.0)	9.51E-09	2.53E-06
Q1TG	35	8.30E-01	(21.0)	6.40E-07	(24.0)	9.51E-09	2.53E-06
SCSF06BB-DENER	51	1.00E+00	(5.0)	5.99E-07	(27.0)		
C2DG01P-P-UUM	15	3.00E-03	(65.5)	5.07E-07	(29.5)	1.27E-09	1.72E-06
RHRC003B-P-UUM	15	3.00E-03	(65.5)	5.07E-07	(29.5)	1.16E-09	1.82E-06
RHRC02BB-P-NDUUM	15	3.00E-03	(65.5)	5.07E-07	(29.5)	1.27E-09	1.72E-06
RHRC02BB-P-UUM	15	3.00E-03	(65.5)	5.07E-07	(29.5)	1.16E-09	1.82E-06
SCSF06AA-DENER	40	1.00E+00	(5.0)	4.55E-07	(32.0)		
FAAC	120	1.60E-03	(85.0)	4.51E-07	(33.5)	0.00E+00	2.79E-06
Q11TG	120	9.90E-01	(10.5)	4.51E-07	(33.5)	0.00E+00	2.79E-06
FAP	240	6.00E-02	(42.0)	4.34E-07	(35.5)	0.00E+00	2.28E-06
Q3TG	240	9.70E-01	(14.5)	4.34E-07	(35.5)	0.00E+00	2.28E-06
C2DG01P-PMS-CC	15	2.50E-03	(77.0)	4.22E-07	(38.0)	1.53E-09	1.98E-06
SEVY03CB-PMS-CC	15	2.50E-03	(77.0)	4.22E-07	(38.0)	1.53E-09	1.98E-06
RHRB01BB-BOO-CC	15	2.50E-03	(77.0)	4.22E-07	(38.0)	1.53E-09	1.98E-06
LCSC002A-P-UUM	16	3.00E-03	(65.5)	3.50E-07	(40.5)	0.00E+00	1.22E-06

RHRC02AA-P-UUM	16	3.00E-03	(65.5)	3.50E-07	(40.5)	0.00E+00	1.22E-06
C0DG01P-P-UUM	8	3.00E-03	(65.5)	3.48E-07	(42.5)	0.00E+00	8.78E-07
RHRC02AA-P-NDUUM	8	3.00E-03	(65.5)	3.48E-07	(42.5)	0.00E+00	8.78E-07
SUR-027-R	648	1.80E-02	(51.0)	3.30E-07	(44.0)	0.00E+00	2.34E-06
NWVY01CA-FMS-CC	8	2.50E-03	(77.0)	2.90E-07	(46.0)	0.00E+00	7.05E-07
C0DG01P-PMS-CC	8	2.50E-03	(77.0)	2.90E-07	(46.0)	0.00E+00	7.05E-07
RHRB01AA-BOO-CC	8	2.50E-03	(77.0)	2.90E-07	(46.0)	0.00E+00	7.05E-07
FLOW-RHR-B3	42	1.00E+00	(5.0)	2.83E-07	(48.0)		
FA3	120	5.00E-02	(44.0)	2.49E-07	(49.0)	0.00E+00	1.45E-06
CSCD300B-PLG-LF	15	1.20E-03	(86.5)	2.03E-07	(50.0)	4.33E-10	6.02E-07
FAS	150	2.20E-02	(49.0)	1.97E-07	(51.5)	0.00E+00	1.67E-06
Q12TG	150	9.70E-01	(14.5)	1.97E-07	(51.5)	0.00E+00	1.67E-06
FA11	114	1.10E-01	(33.0)	1.93E-07	(53.0)	0.00E+00	1.57E-06
C2DG01P-PMS-LF	15	1.10E-03	(90.5)	1.86E-07	(54.5)	9.58E-10	7.88E-07
RHRC02BB-PMS-LF	15	1.10E-03	(90.5)	1.86E-07	(54.5)	9.58E-10	7.88E-07
FS3	120	7.00E-01	(24.0)	1.86E-07	(56.5)	0.00E+00	1.09E-06
FA4	120	1.60E-02	(52.0)	1.86E-07	(56.5)	0.00E+00	1.09E-06
RHRF48BB-VOO-CC	3	2.50E-03	(77.0)	1.65E-07	(58.0)	9.45E-10	6.86E-07
CSCD300A-PLG-LF	8	1.20E-03	(86.5)	1.39E-07	(59.0)	0.00E+00	4.35E-07
RHRC02AA-PMS-LF	16	1.10E-03	(90.5)	1.28E-07	(60.5)	0.00E+00	3.60E-07
C0DG01P-PMS-LF	16	1.10E-03	(90.5)	1.28E-07	(60.5)	0.00E+00	3.60E-07
C2DG01F-PLG-LF	15	5.80E-04	(102.0)	9.79E-08	(62.0)	1.84E-10	3.22E-07
NWVY01AX-ACX-LFI	8	8.40E-04	(95.0)	9.76E-08	(63.0)	0.00E+00	2.15E-07
FLOW-RHR-A3	32	1.00E+00	(5.0)	9.60E-08	(64.0)		
SEVY03AX-ACX-LFI	12	8.40E-04	(95.0)	8.63E-08	(65.0)	0.00E+00	2.92E-07
QWS	114	3.80E-02	(45.0)	8.61E-08	(67.5)	0.00E+00	9.25E-08
Q2TG	114	9.90E-01	(10.5)	8.61E-08	(67.5)	0.00E+00	9.25E-08
LAMBDA-CSR	114	1.00E-02	(54.5)	8.61E-08	(67.5)	0.00E+00	9.25E-08
FA2	114	1.50E-01	(30.0)	8.61E-08	(67.5)	0.00E+00	9.25E-08
CSCF068B-VCC-LF	15	5.00E-04	(112.5)	8.44E-08	(71.0)	2.47E-10	3.14E-07
RHRF48BB-VOO-LF	15	5.00E-04	(112.5)	8.44E-08	(71.0)	2.47E-10	3.14E-07
RHRB01BB-BOO-LF	15	5.00E-04	(112.5)	8.44E-08	(71.0)	2.69E-10	3.18E-07
EE-CSCD300A-PLG	8	7.20E-04	(98.5)	8.36E-08	(73.0)	0.00E+00	2.85E-07
EE-CSCD300B-PLG	12	7.20E-04	(98.5)	7.40E-08	(74.5)	0.00E+00	2.30E-07
EE-C2DG01F-PLG	12	7.20E-04	(98.5)	7.40E-08	(74.5)	0.00E+00	2.30E-07
C0DG01F-PLG-LF	8	5.80E-04	(102.0)	6.74E-08	(76.0)	0.00E+00	1.88E-07
NWVY01CA-FMS-LF	8	5.40E-04	(105.0)	6.27E-08	(77.0)	0.00E+00	2.33E-07
LPCI-PMS-CM	20	2.50E-03	(77.0)	6.02E-08	(78.5)	0.00E+00	1.31E-07
LPCI-BETA	20	1.10E-01	(33.0)	6.02E-08	(78.5)	0.00E+00	1.31E-07
RHRF48AA-VOO-LF	16	5.00E-04	(112.5)	5.84E-08	(81.0)	0.00E+00	2.06E-07
CSCF068A-VCC-LF	16	5.00E-04	(112.5)	5.84E-08	(81.0)	0.00E+00	2.06E-07
RHRB01AA-BOO-LF	16	5.00E-04	(112.5)	5.84E-08	(81.0)	0.00E+00	2.68E-07
NWVY01CA-F-UUM	8	5.00E-04	(112.5)	5.81E-08	(83.0)	0.00E+00	2.49E-07
SEVY03CB-FMS-LF	12	5.40E-04	(105.0)	5.55E-08	(84.0)	0.00E+00	2.07E-07
2DG1PK18-ROO-LFO	12	5.00E-04	(112.5)	5.14E-08	(85.5)	0.00E+00	1.66E-07
SEVY03CB-F-UUM	12	5.00E-04	(112.5)	5.14E-08	(85.5)	0.00E+00	3.02E-07
RHRF64AA-V-UUM	8	3.00E-04	(136.0)	3.48E-08	(95.0)	0.00E+00	1.49E-07

PC02AAAX-AOO-LFO	8	3.00E-04	(136.0)	3.48E-08	(95.0)	0.00E+00	1.08E-07
NWVY01AX-A-UUM	8	3.00E-04	(136.0)	3.48E-08	(95.0)	0.00E+00	8.73E-08
RHRF74AA-V-UUM	8	3.00E-04	(136.0)	3.48E-08	(95.0)	0.00E+00	1.49E-07
RHRF65AA-N-UUM	8	3.00E-04	(136.0)	3.48E-08	(95.0)	0.00E+00	1.49E-07
C0DG01F-S-UUM	8	3.00E-04	(136.0)	3.48E-08	(95.0)	0.00E+00	8.73E-08
CSCF008A-V-UUM	8	3.00E-04	(136.0)	3.48E-08	(95.0)	0.00E+00	1.49E-07
CSCD300A-S-UUM	8	3.00E-04	(136.0)	3.48E-08	(95.0)	0.00E+00	8.73E-08
RHRF88AX-R-UUM	8	3.00E-04	(136.0)	3.48E-08	(95.0)	0.00E+00	1.49E-07
SCSF06AA-V-UUM	8	3.00E-04	(136.0)	3.48E-08	(95.0)	0.00E+00	1.49E-07
RHRH01AX-H-UUM	8	3.00E-04	(136.0)	3.48E-08	(95.0)	0.00E+00	8.73E-08
RHRF51AA-N-UUM	8	3.00E-04	(136.0)	3.48E-08	(95.0)	0.00E+00	1.49E-07
RHRF48AA-V-UUM	8	3.00E-04	(136.0)	3.48E-08	(95.0)	0.00E+00	1.49E-07
RHRF47AA-V-UUM	8	3.00E-04	(136.0)	3.48E-08	(95.0)	0.00E+00	1.49E-07
RHRF60AA-S-UUM	8	3.00E-04	(136.0)	3.48E-08	(95.0)	0.00E+00	1.49E-07
RHRF87AA-V-UUM	8	3.00E-04	(136.0)	3.48E-08	(95.0)	0.00E+00	1.49E-07
RHRF55AX-R-UUM	8	3.00E-04	(136.0)	3.48E-08	(95.0)	0.00E+00	1.49E-07
LPCI-MOV-BETA	40	3.00E-02	(47.0)	3.28E-08	(104.0)	0.00E+00	7.97E-08
FA8	120	5.00E-03	(58.0)	3.19E-08	(106.0)	0.00E+00	2.03E-07
Q9TG	120	9.10E-01	(19.0)	3.19E-08	(106.0)	0.00E+00	2.03E-07
FAZ	120	8.20E-02	(37.0)	3.19E-08	(106.0)	0.00E+00	2.03E-07
C2DG01F-S-UUM	12	3.00E-04	(136.0)	3.08E-08	(116.5)	0.00E+00	9.80E-08
CSCF068B-V-UUM	12	3.00E-04	(136.0)	3.08E-08	(116.5)	0.00E+00	1.23E-07
CSCD300B-S-UUM	12	3.00E-04	(136.0)	3.08E-08	(116.5)	0.00E+00	9.80E-08
SEVY03AX-A-UUM	12	3.00E-04	(136.0)	3.08E-08	(116.5)	0.00E+00	9.80E-08
RHRF88BX-R-UUM	12	3.00E-04	(136.0)	3.08E-08	(116.5)	0.00E+00	1.23E-07
SCSF06BB-V-UUM	12	3.00E-04	(136.0)	3.08E-08	(116.5)	0.00E+00	1.23E-07
RHRH01BX-H-UUM	12	3.00E-04	(136.0)	3.08E-08	(116.5)	0.00E+00	9.80E-08
RHRF87BB-V-UUM	12	3.00E-04	(136.0)	3.08E-08	(116.5)	0.00E+00	1.23E-07
RHRF74BB-V-UUM	12	3.00E-04	(136.0)	3.08E-08	(116.5)	0.00E+00	1.23E-07
RHRF65BB-N-UUM	12	3.00E-04	(136.0)	3.08E-08	(116.5)	0.00E+00	1.23E-07
RHRF64BB-V-UUM	12	3.00E-04	(136.0)	3.08E-08	(116.5)	0.00E+00	1.23E-07
2DG01PSC-OOO-LFO	12	3.00E-04	(136.0)	3.08E-08	(116.5)	0.00E+00	9.69E-08
RHRF60BB-S-UUM	12	3.00E-04	(136.0)	3.08E-08	(116.5)	0.00E+00	1.23E-07
RHRF55BX-R-UUM	12	3.00E-04	(136.0)	3.08E-08	(116.5)	0.00E+00	1.23E-07
RHRF51BB-N-UUM	12	3.00E-04	(136.0)	3.08E-08	(116.5)	0.00E+00	1.23E-07
2DG01PK18CA-LFOO	12	3.00E-04	(136.0)	3.08E-08	(116.5)	0.00E+00	9.69E-08
RHRF48BB-V-UUM	12	3.00E-04	(136.0)	3.08E-08	(116.5)	0.00E+00	1.23E-07
RHRF47BB-V-UUM	12	3.00E-04	(136.0)	3.08E-08	(116.5)	0.00E+00	1.23E-07
1EDC2DEP-FROP-4	12	1.00E+00	(5.0)	3.01E-08	(126.0)		
NOFLOW-RHR-B1	27	1.00E+00	(5.0)	2.99E-08	(127.0)		
NOFLOW-RHR-A1	24	1.00E+00	(5.0)	2.56E-08	(128.0)		
RHR301BX-STR	15	1.10E-04	(159.5)	1.86E-08	(129.0)	4.79E-11	5.62E-08
HCSC001C-P-UUM	1	3.00E-03	(65.5)	1.79E-08	(130.5)	5.51E-11	6.09E-08
CSCC002-P-UUM	1	3.00E-03	(65.5)	1.79E-08	(130.5)	5.51E-11	6.09E-08
LPCI-MOV-CM2	20	2.50E-03	(77.0)	1.64E-08	(132.5)	0.00E+00	3.99E-08
LPCI-MOV-CM1	20	2.50E-03	(77.0)	1.64E-08	(132.5)	0.00E+00	3.99E-08
SWVY02CC-FMS-CC	1	2.50E-03	(77.0)	1.49E-08	(135.0)	5.25E-11	5.66E-08

HCSC001C-PMS-CS	1	2.50E-03 (77.0)	1.49E-08 (135.0)	5.25E-11	5.66E-08
CSCC002-PMS-CC	1	2.50E-03 (77.0)	1.49E-08 (135.0)	5.25E-11	5.66E-08
1EB236B-BCO-LF	15	7.20E-05 (185.5)	1.40E-08 (137.5)	0.00E+00	6.43E-08
1EB36YB-BCO-LF	15	7.20E-05 (185.5)	1.40E-08 (137.5)	0.00E+00	6.43E-08
RHR301AX-STR	16	1.10E-04 (159.5)	1.28E-08 (139.0)	0.00E+00	3.94E-08
RHRF98AX-XOC-LF	8	1.10E-04 (159.5)	1.28E-08 (141.5)	0.00E+00	4.38E-08
RHRF47AA-VOC-LF	8	1.10E-04 (159.5)	1.28E-08 (141.5)	0.00E+00	4.38E-08
RHRF04AA-VOC-LF	8	1.10E-04 (159.5)	1.28E-08 (141.5)	0.00E+00	4.38E-08
RHRF03AA-VOC-LF	8	1.10E-04 (159.5)	1.28E-08 (141.5)	0.00E+00	4.38E-08
C0DG002-CCC-LF	8	1.00E-04 (166.5)	1.16E-08 (144.5)	0.00E+00	4.70E-08
RHRF31AX-CCC-LF	8	1.00E-04 (166.5)	1.16E-08 (144.5)	0.00E+00	4.70E-08
RHRF98BX-XOC-LF	12	1.10E-04 (159.5)	1.13E-08 (147.5)	0.00E+00	5.29E-08
RHRF47BB-VOC-LF	12	1.10E-04 (159.5)	1.13E-08 (147.5)	0.00E+00	5.29E-08
RHRF04BB-VOC-LF	12	1.10E-04 (159.5)	1.13E-08 (147.5)	0.00E+00	5.29E-08
RHRF03BB-VOC-LF	12	1.10E-04 (159.5)	1.13E-08 (147.5)	0.00E+00	5.29E-08
RHRF31BX-CCC-LF	12	1.00E-04 (166.5)	1.03E-08 (150.5)	0.00E+00	4.66E-08
C2DGF002-CCC-LF	12	1.00E-04 (166.5)	1.03E-08 (150.5)	0.00E+00	4.66E-08
NLOSP	72	1.00E+00 (5.0)	1.01E-08 (152.0)		
1EB16211-BCO	8	8.40E-05 (172.5)	9.76E-09 (154.0)	0.00E+00	3.63E-08
CCBF068A-BCO-LF	8	8.40E-05 (172.5)	9.76E-09 (154.0)	0.00E+00	3.63E-08
CCB0DG1P-BCO-LF	8	8.40E-05 (172.5)	9.76E-09 (154.0)	0.00E+00	3.63E-08
1EB16212-BCO	12	8.40E-05 (172.5)	8.63E-09 (157.0)	0.00E+00	3.28E-08
CSCB068X-BCO-LF	12	8.40E-05 (172.5)	8.63E-09 (157.0)	0.00E+00	3.28E-08
CCB2DG1P-BCO-LF	12	8.40E-05 (172.5)	8.63E-09 (157.0)	0.00E+00	3.28E-08
1EB235A-BCO-LF	10	7.20E-05 (185.5)	8.42E-09 (159.5)	0.00E+00	3.24E-08
1EB235YA-BCO-LF	10	7.20E-05 (185.5)	8.42E-09 (159.5)	0.00E+00	3.24E-08
1EB235XA-BCO-LF	8	7.20E-05 (185.5)	8.36E-09 (163.0)	0.00E+00	3.23E-08
1EB1Y22X-BCO	8	7.20E-05 (185.5)	8.36E-09 (163.0)	0.00E+00	3.23E-08
NWVB001X-BCO-LF	8	7.20E-05 (185.5)	8.36E-09 (163.0)	0.00E+00	3.23E-08
1EB35Y2X-BCO-LF	8	7.20E-05 (185.5)	8.36E-09 (163.0)	0.00E+00	3.23E-08
1EB211YX-BCO-LF	8	7.20E-05 (185.5)	8.36E-09 (163.0)	0.00E+00	3.23E-08
1EB36Y1X-BCO-LF	12	7.20E-05 (185.5)	7.40E-09 (168.0)	0.00E+00	3.05E-08
1EB36XB-BCO-LF	12	7.20E-05 (185.5)	7.40E-09 (168.0)	0.00E+00	3.05E-08
SEVB001X-BCO-LF	12	7.20E-05 (185.5)	7.40E-09 (168.0)	0.00E+00	3.05E-08
1EB212YX-BCO-LF	12	7.20E-05 (185.5)	7.40E-09 (168.0)	0.00E+00	3.05E-08
1EB2Y22X-BCO	12	7.20E-05 (185.5)	7.40E-09 (168.0)	0.00E+00	3.05E-08
FAAA	36	6.40E-02 (40.5)	6.77E-09 (172.0)	0.00E+00	3.59E-08
Q10TG	36	9.30E-01 (18.0)	6.77E-09 (172.0)	0.00E+00	3.59E-08
FA9	36	8.00E-02 (38.0)	6.77E-09 (172.0)	0.00E+00	3.59E-08
HCSC001C-PMS-LF	1	1.10E-03 (90.5)	6.55E-09 (174.5)	4.02E-11	2.22E-08
CSCC002-PMS-LF	1	1.10E-03 (90.5)	6.55E-09 (174.5)	4.02E-11	2.22E-08
DG2A-GEN-LF-FTS	36	2.50E-02 (48.0)	5.74E-09 (176.0)	0.00E+00	3.84E-08
SWVY02AX-ACX-LFI	1	8.40E-04 (95.0)	5.00E-09 (177.0)	1.48E-11	1.39E-08
DG2A-GEN-LF-FTR	36	1.90E-02 (50.0)	4.36E-09 (178.0)	0.00E+00	2.51E-08
EE-CSCD300-PLG	1	7.20E-04 (98.5)	4.29E-09 (179.0)	1.55E-11	1.65E-08
CSCD300-PLG-LF	1	5.80E-04 (102.0)	3.45E-09 (180.0)	1.32E-11	1.26E-08
FA10	36	1.10E-01 (33.0)	3.34E-09 (181.0)	0.00E+00	2.72E-08

SWVY02CC-FMS-LF	1	5.40E-04	(105.0)	3.21E-09	(182.0)	5.60E-11	1.41E-08
EE-CST-LVL	2	1.00E+00	(5.0)	3.20E-09	(183.0)		
SWVY02CC-F-UUM	1	5.00E-04	(112.5)	2.98E-09	(185.0)	5.06E-11	1.13E-08
HCSF015C-VCC-LF	1	5.00E-04	(112.5)	2.98E-09	(185.0)	9.27E-12	8.53E-09
HCSF004C-VCC-LF	1	5.00E-04	(112.5)	2.98E-09	(185.0)	9.27E-12	8.53E-09
RHRB03AX-BCO-LF	8	2.40E-05	(196.5)	2.79E-09	(187.0)	0.00E+00	9.87E-09
OPFAIL-VENT-2H	54	2.10E-03	(84.0)	2.60E-09	(188.0)	-1.27E-08	5.42E-08
RHRB03BX-BCO-LF	12	2.40E-05	(196.5)	2.47E-09	(189.0)	0.00E+00	8.74E-09
RLOSP	1	2.10E-04	(154.0)	1.25E-09	(190.0)	1.62E-11	4.95E-09
HC001CB-BCO-LF	1	8.40E-05	(172.5)	5.00E-10	(191.5)	1.82E-12	2.01E-09
CCBC002-BCO-LF	1	8.40E-05	(172.5)	5.00E-10	(191.5)	1.82E-12	2.01E-09
SWVB001X-BCO-LF	1	7.20E-05	(185.5)	4.29E-10	(193.5)	1.53E-12	1.61E-09
1EB43C-BCO-LF	1	7.20E-05	(185.5)	4.29E-10	(193.5)	1.53E-12	1.61E-09
HCSD001X-STR	1	3.80E-05	(195.0)	2.26E-10	(195.0)	8.64E-13	8.63E-10
1EB36Y2X-BCO-LF	2	7.20E-05	(185.5)	5.34E-11	(196.5)	0.00E+00	1.91E-10
1EB35Y1X-BCO-LF	2	7.20E-05	(185.5)	5.34E-11	(196.5)	0.00E+00	1.91E-10

TOTAL FIRE SEQUENCE
RISK INCREASE BY BASE EVENT (WITH ASSOCIATED UNCERTAINTY INTERVALS)

BASE EVENT	OCCUR	PROB	(RANK)	RISK INCREASE	(RANK)	LOWER 5%	UPPER 5%
LAMBDA-CR	1	3.40E-03	(60.0)	6.38E-03	(1.0)	4.23E-04	2.23E-02
LAMBDA-SVGR	468	1.40E-02	(53.0)	5.56E-04	(2.0)	0.00E+00	4.03E-03
R-OP-1	1	6.40E-02	(40.5)	3.18E-04	(3.0)	1.63E-12	1.57E-04
FAAC	120	1.60E-03	(85.0)	2.81E-04	(4.0)	0.00E+00	2.16E-03
FR	1	1.00E-01	(35.0)	1.96E-04	(5.0)	9.66E-13	7.86E-05
1EB236B-BCO-LF	15	7.20E-05	(185.5)	1.95E-04	(6.5)	0.00E+00	1.65E-03
1EB36YB-BCO-LF	15	7.20E-05	(185.5)	1.95E-04	(6.5)	0.00E+00	1.65E-03
RHR301BX-STR	15	1.10E-04	(159.5)	1.69E-04	(8.0)	2.96E-06	7.01E-04
CSCF068B-VCC-LF	15	5.00E-04	(112.5)	1.69E-04	(10.0)	2.96E-06	7.00E-04
RHRB01BB-BOO-LF	15	5.00E-04	(112.5)	1.69E-04	(10.0)	2.96E-06	7.00E-04
RHRF48BB-VOO-LF	15	5.00E-04	(112.5)	1.69E-04	(10.0)	2.96E-06	7.00E-04
C2DG01F-PLG-LF	15	5.80E-04	(102.0)	1.69E-04	(12.0)	2.95E-06	7.00E-04
RHRC02BB-PMS-LF	15	1.10E-03	(90.5)	1.69E-04	(13.5)	2.96E-06	6.99E-04
C2DG01P-PMS-LF	15	1.10E-03	(90.5)	1.69E-04	(13.5)	2.96E-06	6.99E-04
CSCD300B-PLG-LF	15	1.20E-03	(86.5)	1.69E-04	(15.0)	2.95E-06	7.00E-04
SEVY03CB-FMS-CC	15	2.50E-03	(77.0)	1.68E-04	(17.0)	2.92E-06	6.94E-04
RHRB01BB-BOO-CC	15	2.50E-03	(77.0)	1.68E-04	(17.0)	2.92E-06	6.94E-04
C2DG01P-PMS-CC	15	2.50E-03	(77.0)	1.68E-04	(17.0)	2.92E-06	6.94E-04
RHRC02BB-P-NDUUM	15	3.00E-03	(65.5)	1.68E-04	(20.5)	2.94E-06	6.99E-04
RHRC003B-P-UUM	15	3.00E-03	(65.5)	1.68E-04	(20.5)	2.95E-06	7.00E-04
C2DG01P-P-UUM	15	3.00E-03	(65.5)	1.68E-04	(20.5)	2.94E-06	6.99E-04
RHRC02BB-P-UUM	15	3.00E-03	(65.5)	1.68E-04	(20.5)	2.95E-06	7.00E-04
FAE	35	3.80E-03	(59.0)	1.68E-04	(23.0)	3.80E-06	5.82E-04
RHRH01BX-HTX-LFB	15	6.20E-03	(56.5)	1.68E-04	(24.0)	2.95E-06	6.98E-04
FR1	234	1.00E-02	(54.5)	1.38E-04	(25.0)	0.00E+00	4.53E-04
1EB235A-BCO-LF	10	7.20E-05	(185.5)	1.17E-04	(26.5)	0.00E+00	5.36E-04
1EB235YA-BCO-LF	10	7.20E-05	(185.5)	1.17E-04	(26.5)	0.00E+00	5.36E-04
RHR301AX-STR	16	1.10E-04	(159.5)	1.17E-04	(28.0)	0.00E+00	5.34E-04
RHRF48AA-VOO-LF	16	5.00E-04	(112.5)	1.17E-04	(30.0)	0.00E+00	5.34E-04
RHRB01AA-BOO-LF	16	5.00E-04	(112.5)	1.17E-04	(30.0)	0.00E+00	5.34E-04
CSCF068A-VCC-LF	16	5.00E-04	(112.5)	1.17E-04	(30.0)	0.00E+00	5.34E-04
C0DG01P-PMS-LF	16	1.10E-03	(90.5)	1.17E-04	(32.5)	0.00E+00	5.34E-04
RHRC02AA-PMS-LF	16	1.10E-03	(90.5)	1.17E-04	(32.5)	0.00E+00	5.34E-04
LCSC002A-P-UUM	16	3.00E-03	(65.5)	1.16E-04	(34.5)	0.00E+00	5.30E-04
RHRC02AA-P-UUM	16	3.00E-03	(65.5)	1.16E-04	(34.5)	0.00E+00	5.30E-04
RHRB03AX-BCO-LF	8	2.40E-05	(196.5)	1.16E-04	(36.0)	0.00E+00	5.33E-04
1EB35Y2X-BCO-LF	8	7.20E-05	(185.5)	1.16E-04	(39.0)	0.00E+00	5.33E-04
1EB235XA-BCO-LF	8	7.20E-05	(185.5)	1.16E-04	(39.0)	0.00E+00	5.33E-04
1EB211YX-BCO-LF	8	7.20E-05	(185.5)	1.16E-04	(39.0)	0.00E+00	5.33E-04
NWVB001X-BCO-LF	8	7.20E-05	(185.5)	1.16E-04	(39.0)	0.00E+00	5.33E-04

1EB1Y22X-BCO	8	7.20E-05 (185.5)	1.16E-04 (39.0)	0.00E+00	5.33E-04
CCBF068A-BCO-LF	8	8.40E-05 (172.5)	1.16E-04 (43.0)	0.00E+00	5.33E-04
1EB16211-BCO	8	8.40E-05 (172.5)	1.16E-04 (43.0)	0.00E+00	5.33E-04
CCB0DG1P-BCO-LF	8	8.40E-05 (172.5)	1.16E-04 (43.0)	0.00E+00	5.33E-04
C0DG002-CCC-LF	8	1.00E-04 (166.5)	1.16E-04 (47.5)	0.00E+00	5.33E-04
RHRF31AX-CCC-LF	8	1.00E-04 (166.5)	1.16E-04 (47.5)	0.00E+00	5.33E-04
RHRF47AA-VOC-LF	8	1.10E-04 (159.5)	1.16E-04 (47.5)	0.00E+00	5.33E-04
RHRF04AA-VOC-LF	8	1.10E-04 (159.5)	1.16E-04 (47.5)	0.00E+00	5.33E-04
RHRF98AX-XOC-LF	8	1.10E-04 (159.5)	1.16E-04 (47.5)	0.00E+00	5.33E-04
RHRF03AA-VOC-LF	8	1.10E-04 (159.5)	1.16E-04 (47.5)	0.00E+00	5.33E-04
RHRF64AA-V-UUM	8	3.00E-04 (136.0)	1.16E-04 (59.0)	0.00E+00	5.32E-04
RHRF87AA-V-UUM	8	3.00E-04 (136.0)	1.16E-04 (59.0)	0.00E+00	5.32E-04
RHRF60AA-S-UUM	8	3.00E-04 (136.0)	1.16E-04 (59.0)	0.00E+00	5.32E-04
CSCD300A-S-UUM	8	3.00E-04 (136.0)	1.16E-04 (59.0)	0.00E+00	5.33E-04
RHRF55AX-R-UUM	8	3.00E-04 (136.0)	1.16E-04 (59.0)	0.00E+00	5.32E-04
RHRF65AA-N-UUM	8	3.00E-04 (136.0)	1.16E-04 (59.0)	0.00E+00	5.32E-04
RHRF74AA-V-UUM	8	3.00E-04 (136.0)	1.16E-04 (59.0)	0.00E+00	5.32E-04
RHRF51AA-N-UUM	8	3.00E-04 (136.0)	1.16E-04 (59.0)	0.00E+00	5.32E-04
NWVY01AX-A-UUM	8	3.00E-04 (136.0)	1.16E-04 (59.0)	0.00E+00	5.33E-04
C0DG01F-S-UUM	8	3.00E-04 (136.0)	1.16E-04 (59.0)	0.00E+00	5.33E-04
SCSF06AA-V-UUM	8	3.00E-04 (136.0)	1.16E-04 (59.0)	0.00E+00	5.32E-04
RHRF88AX-R-UUM	8	3.00E-04 (136.0)	1.16E-04 (59.0)	0.00E+00	5.32E-04
PC02AAAX-AOO-LFO	8	3.00E-04 (136.0)	1.16E-04 (59.0)	0.00E+00	5.33E-04
RHRF48AA-V-UUM	8	3.00E-04 (136.0)	1.16E-04 (59.0)	0.00E+00	5.32E-04
RHRF47AA-V-UUM	8	3.00E-04 (136.0)	1.16E-04 (59.0)	0.00E+00	5.32E-04
RHRH01AX-H-UUM	8	3.00E-04 (136.0)	1.16E-04 (59.0)	0.00E+00	5.33E-04
CSCF008A-V-UUM	8	3.00E-04 (136.0)	1.16E-04 (59.0)	0.00E+00	5.32E-04
NWVY01CA-F-UUM	8	5.00E-04 (112.5)	1.16E-04 (68.0)	0.00E+00	5.33E-04
NWVY01CA-FMS-LF	8	5.40E-04 (105.0)	1.16E-04 (69.0)	0.00E+00	5.32E-04
C0DG01F-PLG-LF	8	5.80E-04 (102.0)	1.16E-04 (70.0)	0.00E+00	5.33E-04
EE-CSCD300A-PLG	8	7.20E-04 (98.5)	1.16E-04 (71.0)	0.00E+00	5.31E-04
RHRH01AX-HTX-LFB	16	6.20E-03 (56.5)	1.16E-04 (72.0)	0.00E+00	5.32E-04
NWVY01AX-ACX-LFI	8	8.40E-04 (95.0)	1.16E-04 (73.0)	0.00E+00	5.33E-04
CSCD300A-PLG-LF	8	1.20E-03 (86.5)	1.16E-04 (74.0)	0.00E+00	5.33E-04
NWVY01CA-FMS-CC	8	2.50E-03 (77.0)	1.16E-04 (76.0)	0.00E+00	5.32E-04
C0DG01P-PMS-CC	8	2.50E-03 (77.0)	1.16E-04 (76.0)	0.00E+00	5.32E-04
RHRB01AA-BOO-CC	8	2.50E-03 (77.0)	1.16E-04 (76.0)	0.00E+00	5.32E-04
C0DG01P-P-UUM	8	3.00E-03 (65.5)	1.16E-04 (78.5)	0.00E+00	5.32E-04
RHRC02AA-P-NDUUM	8	3.00E-03 (65.5)	1.16E-04 (78.5)	0.00E+00	5.32E-04
RHRB03BX-BCO-LF	12	2.40E-05 (196.5)	1.03E-04 (80.0)	0.00E+00	4.81E-04
SEVB001X-BCO-LF	12	7.20E-05 (185.5)	1.03E-04 (83.0)	0.00E+00	4.81E-04
1EB2Y22X-BCO	12	7.20E-05 (185.5)	1.03E-04 (83.0)	0.00E+00	4.81E-04
1EB36Y1X-BCO-LF	12	7.20E-05 (185.5)	1.03E-04 (83.0)	0.00E+00	4.81E-04
1EB36XB-BCO-LF	12	7.20E-05 (185.5)	1.03E-04 (83.0)	0.00E+00	4.81E-04
1EB212YX-BCO-LF	12	7.20E-05 (185.5)	1.03E-04 (83.0)	0.00E+00	4.81E-04
1EB16212-BCO	12	8.40E-05 (172.5)	1.03E-04 (87.0)	0.00E+00	4.81E-04
CSCB068X-BCO-LF	12	8.40E-05 (172.5)	1.03E-04 (87.0)	0.00E+00	4.81E-04

CCB2DG1P-BCO-LF	12	8.40E-05 (172.5)	1.03E-04 (87.0)	0.00E+00	4.81E-04
RHRF31BX-CCC-LF	12	1.00E-04 (166.5)	1.03E-04 (91.5)	0.00E+00	4.81E-04
C2DGF002-CCC-LF	12	1.00E-04 (166.5)	1.03E-04 (91.5)	0.00E+00	4.81E-04
RHRF98BX-XOC-LF	12	1.10E-04 (159.5)	1.03E-04 (91.5)	0.00E+00	4.81E-04
RHRF47BB-VOC-LF	12	1.10E-04 (159.5)	1.03E-04 (91.5)	0.00E+00	4.81E-04
RHRF04BB-VOC-LF	12	1.10E-04 (159.5)	1.03E-04 (91.5)	0.00E+00	4.81E-04
RHRF03BB-VOC-LF	12	1.10E-04 (159.5)	1.03E-04 (91.5)	0.00E+00	4.81E-04
SCSF06BB-V-UUM	12	3.00E-04 (136.0)	1.03E-04 (103.5)	0.00E+00	4.81E-04
CSCD300B-S-UUM	12	3.00E-04 (136.0)	1.03E-04 (103.5)	0.00E+00	4.81E-04
C2DG01F-S-UUM	12	3.00E-04 (136.0)	1.03E-04 (103.5)	0.00E+00	4.81E-04
RHRF87BB-V-UUM	12	3.00E-04 (136.0)	1.03E-04 (103.5)	0.00E+00	4.81E-04
RHRF74BB-V-UUM	12	3.00E-04 (136.0)	1.03E-04 (103.5)	0.00E+00	4.81E-04
RHRF65BB-N-UUM	12	3.00E-04 (136.0)	1.03E-04 (103.5)	0.00E+00	4.81E-04
CSCF068B-V-UUM	12	3.00E-04 (136.0)	1.03E-04 (103.5)	0.00E+00	4.81E-04
SEVY03AX-A-UUM	12	3.00E-04 (136.0)	1.03E-04 (103.5)	0.00E+00	4.81E-04
2DG01PSC-OOO-LFO	12	3.00E-04 (136.0)	1.03E-04 (103.5)	0.00E+00	4.81E-04
RHRF64BB-V-UUM	12	3.00E-04 (136.0)	1.03E-04 (103.5)	0.00E+00	4.81E-04
RHRF60BB-S-UUM	12	3.00E-04 (136.0)	1.03E-04 (103.5)	0.00E+00	4.81E-04
RHRF55BX-R-UUM	12	3.00E-04 (136.0)	1.03E-04 (103.5)	0.00E+00	4.81E-04
RHRF51BB-N-UUM	12	3.00E-04 (136.0)	1.03E-04 (103.5)	0.00E+00	4.81E-04
RHRF48BB-V-UUM	12	3.00E-04 (136.0)	1.03E-04 (103.5)	0.00E+00	4.81E-04
2DG01PK18CA-LFOO	12	3.00E-04 (136.0)	1.03E-04 (103.5)	0.00E+00	4.81E-04
RHRF47BB-V-UUM	12	3.00E-04 (136.0)	1.03E-04 (103.5)	0.00E+00	4.81E-04
RHRF88BX-R-UUM	12	3.00E-04 (136.0)	1.03E-04 (103.5)	0.00E+00	4.81E-04
RHRH01BX-H-UUM	12	3.00E-04 (136.0)	1.03E-04 (103.5)	0.00E+00	4.81E-04
SEVY03CB-F-UUM	12	5.00E-04 (112.5)	1.03E-04 (113.5)	0.00E+00	4.81E-04
2DG1PK18-ROO-LFO	12	5.00E-04 (112.5)	1.03E-04 (113.5)	0.00E+00	4.81E-04
SEVY03CB-FMS-LF	12	5.40E-04 (105.0)	1.03E-04 (115.0)	0.00E+00	4.81E-04
EE-CSCD300B-PLG	12	7.20E-04 (98.5)	1.03E-04 (116.5)	0.00E+00	4.81E-04
EE-C2DG01F-PLG	12	7.20E-04 (98.5)	1.03E-04 (116.5)	0.00E+00	4.81E-04
SEVY03AX-ACX-LFI	12	8.40E-04 (95.0)	1.03E-04 (118.0)	0.00E+00	4.80E-04
RHRF48BB-VOO-CC	3	2.50E-03 (77.0)	6.59E-05 (119.0)	2.00E-06	2.33E-04
LAMBDA-AUX	719	5.40E-02 (43.0)	5.90E-05 (120.0)	1.76E-06	2.46E-04
SUR-002-L	650	1.60E-01 (29.0)	4.62E-05 (121.0)	0.00E+00	2.08E-04
FAT	53	6.80E-02 (39.0)	3.08E-05 (122.0)	9.68E-07	9.67E-05
SUR-007-V	18	8.70E-02 (36.0)	2.88E-05 (123.0)	2.22E-06	8.57E-05
LPCI-PMS-CM	20	2.50E-03 (77.0)	2.40E-05 (124.0)	0.00E+00	9.22E-05
FS2	827	3.00E-01 (25.5)	2.17E-05 (125.0)	1.51E-07	8.16E-05
FA7	120	1.30E-01 (31.0)	1.83E-05 (126.0)	0.00E+00	6.31E-05
SUR-027-R	648	1.80E-02 (51.0)	1.80E-05 (127.0)	1.21E-10	4.49E-05
FA6	114	1.80E-01 (27.0)	1.72E-05 (128.0)	0.00E+00	5.62E-05
LAMBDA-TB	35	3.70E-02 (46.0)	1.67E-05 (129.0)	5.24E-07	6.63E-05
FA4	120	1.60E-02 (52.0)	1.14E-05 (130.0)	0.00E+00	7.27E-05
FAS	150	2.20E-02 (49.0)	8.74E-06 (131.0)	0.00E+00	6.20E-05
LAMBDA-CSR	114	1.00E-02 (54.5)	8.52E-06 (132.0)	0.00E+00	5.85E-05
FAP	240	6.00E-02 (42.0)	6.80E-06 (133.0)	0.00E+00	5.56E-05
LPCI-MOV-CM2	20	2.50E-03 (77.0)	6.55E-06 (134.5)	0.00E+00	2.74E-05

LPCI-MOV-CM1	20	2.50E-03 (77.0)	6.55E-06 (134.5)	0.00E+00	2.74E-05
FA8	120	5.00E-03 (58.0)	6.34E-06 (136.0)	0.00E+00	4.34E-05
HCSD001X-STR	1	3.80E-05 (195.0)	5.95E-06 (137.0)	1.48E-07	1.94E-05
SWVB001X-BCO-LF	1	7.20E-05 (185.5)	5.95E-06 (138.5)	1.48E-07	1.94E-05
1EB43C-BCO-LF	1	7.20E-05 (185.5)	5.95E-06 (138.5)	1.48E-07	1.94E-05
HC001CB-BCO-LF	1	8.40E-05 (172.5)	5.95E-06 (140.5)	1.48E-07	1.94E-05
CCBC002-BCO-LF	1	8.40E-05 (172.5)	5.95E-06 (140.5)	1.48E-07	1.94E-05
RLOSP	1	2.10E-04 (154.0)	5.95E-06 (142.0)	1.48E-07	1.94E-05
SWVY02CC-F-UUM	1	5.00E-04 (112.5)	5.95E-06 (144.0)	1.48E-07	1.94E-05
HCSF015C-VCC-LF	1	5.00E-04 (112.5)	5.95E-06 (144.0)	1.48E-07	1.94E-05
HCSF004C-VCC-LF	1	5.00E-04 (112.5)	5.95E-06 (144.0)	1.48E-07	1.94E-05
SWVY02CC-FMS-LF	1	5.40E-04 (105.0)	5.95E-06 (146.0)	1.48E-07	1.94E-05
CSCD300-PLG-LF	1	5.80E-04 (102.0)	5.95E-06 (147.0)	1.48E-07	1.94E-05
EE-CSCD300-PLG	1	7.20E-04 (98.5)	5.95E-06 (148.0)	1.48E-07	1.94E-05
SWVY02AX-ACX-LFI	1	8.40E-04 (95.0)	5.95E-06 (149.0)	1.48E-07	1.94E-05
HCSC001C-PMS-LF	1	1.10E-03 (90.5)	5.95E-06 (150.5)	1.48E-07	1.94E-05
CSCC002-PMS-LF	1	1.10E-03 (90.5)	5.95E-06 (150.5)	1.48E-07	1.94E-05
SWVY02CC-FMS-CC	1	2.50E-03 (77.0)	5.94E-06 (153.0)	1.48E-07	1.94E-05
HCSC001C-PMS-CS	1	2.50E-03 (77.0)	5.94E-06 (153.0)	1.48E-07	1.94E-05
CSCC002-PMS-CC	1	2.50E-03 (77.0)	5.94E-06 (153.0)	1.48E-07	1.94E-05
HCSC001C-P-UUM	1	3.00E-03 (65.5)	5.93E-06 (155.5)	1.48E-07	1.94E-05
CSCC002-P-UUM	1	3.00E-03 (65.5)	5.93E-06 (155.5)	1.48E-07	1.94E-05
FA3	120	5.00E-02 (44.0)	4.72E-06 (157.0)	0.00E+00	3.11E-05
FS1	35	1.70E-01 (28.0)	3.13E-06 (158.0)	8.96E-08	1.12E-05
CONT-LEAK	1298	7.50E-01 (23.0)	2.60E-06 (159.0)	-2.34E-06	0.00E+00
QWS	114	3.80E-02 (45.0)	2.18E-06 (160.0)	0.00E+00	2.52E-06
FA11	114	1.10E-01 (33.0)	1.56E-06 (161.0)	0.00E+00	1.23E-05
FA1	35	3.00E-01 (25.5)	1.49E-06 (162.0)	2.29E-08	5.39E-06
OPFAIL-VENT-2H	54	2.10E-03 (84.0)	1.24E-06 (163.0)	-5.05E-06	2.65E-05
LPCI-MOV-BETA	40	3.00E-02 (47.0)	1.06E-06 (164.0)	0.00E+00	2.98E-06
1EB36Y2X-BCO-LF	2	7.20E-05 (185.5)	7.41E-07 (165.5)	0.00E+00	4.66E-06
1EB35Y1X-BCO-LF	2	7.20E-05 (185.5)	7.41E-07 (165.5)	0.00E+00	4.66E-06
Q4TG	53	8.20E-01 (22.0)	4.93E-07 (167.0)	1.99E-09	1.71E-06
FA2	114	1.50E-01 (30.0)	4.88E-07 (168.0)	0.00E+00	8.93E-07
LPCI-BETA	20	1.10E-01 (33.0)	4.87E-07 (169.0)	0.00E+00	1.30E-06
FA5	53	8.40E-01 (20.0)	4.28E-07 (170.0)	2.35E-09	1.73E-06
FAZ	120	8.20E-02 (37.0)	3.57E-07 (171.0)	0.00E+00	2.98E-06
DG2A-GEN-LF-FTR	36	1.90E-02 (50.0)	2.25E-07 (172.0)	0.00E+00	1.56E-06
DG2A-GEN-LF-FTS	36	2.50E-02 (48.0)	2.24E-07 (173.0)	0.00E+00	1.61E-06
Q8TG	120	9.50E-01 (16.5)	1.44E-07 (174.0)	0.00E+00	3.43E-07
Q1TG	35	8.30E-01 (21.0)	1.31E-07 (175.0)	5.22E-10	4.88E-07
FAAA	36	6.40E-02 (40.5)	9.89E-08 (176.0)	0.00E+00	4.73E-07
FS3	120	7.00E-01 (24.0)	7.95E-08 (177.0)	0.00E+00	4.26E-07
FA9	36	8.00E-02 (38.0)	7.78E-08 (178.0)	0.00E+00	4.12E-07
Q6TG	114	9.80E-01 (12.5)	7.69E-08 (179.0)	0.00E+00	1.93E-07
Q7TG	120	9.50E-01 (16.5)	3.69E-08 (180.0)	0.00E+00	8.94E-08
FA10	36	1.10E-01 (33.0)	2.70E-08 (181.0)	0.00E+00	2.12E-07

Q5TG	114	9.80E-01 (12.5)	1.42E-08 (182.0)	0.00E+00	3.43E-08
Q3TG	240	9.70E-01 (14.5)	1.34E-08 (183.0)	0.00E+00	8.62E-08
Q12TG	150	9.70E-01 (14.5)	6.08E-09 (184.0)	0.00E+00	5.34E-08
Q11TG	120	9.90E-01 (10.5)	4.56E-09 (185.0)	0.00E+00	6.69E-08
Q9TG	120	9.10E-01 (19.0)	3.15E-09 (186.0)	0.00E+00	1.33E-08
Q2TG	114	9.90E-01 (10.5)	8.69E-10 (187.0)	0.00E+00	9.36E-10
Q10TG	36	9.30E-01 (18.0)	5.09E-10 (188.0)	0.00E+00	1.62E-09
EE-CST-LVL	2	1.00E+00 (5.0)	0.00E+00 (193.0)		
NOFLOW-RHR-B1	27	1.00E+00 (5.0)	0.00E+00 (193.0)		
NOFLOW-RHR-A1	24	1.00E+00 (5.0)	0.00E+00 (193.0)		
NLOSP	72	1.00E+00 (5.0)	0.00E+00 (193.0)		
SCSF06BB-DENER	51	1.00E+00 (5.0)	0.00E+00 (193.0)		
SCSF06AA-DENER	40	1.00E+00 (5.0)	0.00E+00 (193.0)		
FLOW-RHR-B3	42	1.00E+00 (5.0)	0.00E+00 (193.0)		
FLOW-RHR-A3	32	1.00E+00 (5.0)	0.00E+00 (193.0)		
1EDC2DEP-FROP-4	12	1.00E+00 (5.0)	0.00E+00 (193.0)		

TOTAL FIRE SEQUENCE
UNCERTAINTY IMPORTANCE BY BASE EVENT

BASE EVENT	OCCUR	PROB	(RANK)	% REDUCTION IN THE UNCERTAINTY OF LOG RISK	(RANK)	Y.05/TE.05*	Y.95/TE.95*
SUR-002-L	650	1.60E-01	(29.0)	33.8	(1.0)	4.92	1.67
LAMBDA-CR	1	3.40E-03	(60.0)	17.1	(2.0)	19.75	1.88
SUR-007-V	18	8.70E-02	(36.0)	12.5	(3.0)	1.99	1.05
LAMBDA-AUX	719	5.40E-02	(43.0)	7.2	(4.0)	1.57	1.11
FAT	53	6.80E-02	(39.0)	5.1	(5.0)	1.30	1.00
C2DG01P-P-UUM	15	3.00E-03	(65.5)	4.9	(8.5)	1.35	1.01
C0DG01P-P-UUM	8	3.00E-03	(65.5)	4.9	(8.5)	1.35	1.01
CSCC002-P-UUM	1	3.00E-03	(65.5)	4.9	(8.5)	1.35	1.01
HCSC001C-P-UUM	1	3.00E-03	(65.5)	4.9	(8.5)	1.35	1.01
RHRC02BB-P-NDUUM	15	3.00E-03	(65.5)	4.9	(8.5)	1.35	1.01
RHRC02AA-P-NDUUM	8	3.00E-03	(65.5)	4.9	(8.5)	1.35	1.01
LAMBDA-SVGR	468	1.40E-02	(53.0)	3.9	(12.0)	1.11	1.63
FS2	827	3.00E-01	(25.5)	3.6	(13.0)	1.13	1.16
SUR-027-R	648	1.80E-02	(51.0)	3.5	(14.0)	1.00	0.96
RLOSP	1	2.10E-04	(154.0)	3.2	(15.0)	1.00	1.00
FAE	35	3.80E-03	(59.0)	2.8	(16.0)	1.11	1.00
RHRF04AA-VOC-LF	8	1.10E-04	(159.5)	2.8	(20.5)	1.00	1.00
RHRF04BB-VOC-LF	12	1.10E-04	(159.5)	2.8	(20.5)	1.00	1.00
RHRF03AA-VOC-LF	8	1.10E-04	(159.5)	2.8	(20.5)	1.00	1.00
RHRF98AX-XOC-LF	8	1.10E-04	(159.5)	2.8	(20.5)	1.00	1.00
RHRF98BX-XOC-LF	12	1.10E-04	(159.5)	2.8	(20.5)	1.00	1.00
RHRF47AA-VOC-LF	8	1.10E-04	(159.5)	2.8	(20.5)	1.00	1.00
RHRF47BB-VOC-LF	12	1.10E-04	(159.5)	2.8	(20.5)	1.00	1.00
RHRF03BB-VOC-LF	12	1.10E-04	(159.5)	2.8	(20.5)	1.00	1.00
LAMBDA-TB	35	3.70E-02	(46.0)	2.4	(25.0)	1.43	1.00
RHRH01BX-HTX-LFB	15	6.20E-03	(56.5)	2.4	(26.5)	1.40	1.02
RHRH01AX-HTX-LFB	16	6.20E-03	(56.5)	2.4	(26.5)	1.40	1.02
Q4TG	53	8.20E-01	(22.0)	2.4	(28.0)	1.04	1.00
FS3	120	7.00E-01	(24.0)	2.3	(29.0)	1.00	1.00
SEVY03CB-F-UUM	12	5.00E-04	(112.5)	2.2	(31.0)	1.00	1.00
SWVY02CC-F-UUM	1	5.00E-04	(112.5)	2.2	(31.0)	1.00	1.00
NWVY01CA-F-UUM	8	5.00E-04	(112.5)	2.2	(31.0)	1.00	1.00
FR1	234	1.00E-02	(54.5)	2.2	(33.0)	1.00	1.02
SWVY02AX-ACX-LFI	1	8.40E-04	(95.0)	2.1	(35.0)	1.00	1.01
SEVY03AX-ACX-LFI	12	8.40E-04	(95.0)	2.1	(35.0)	1.00	1.01
NWVY01AX-ACX-LFI	8	8.40E-04	(95.0)	2.1	(35.0)	1.00	1.01
RHRF51AA-N-UUM	8	3.00E-04	(136.0)	2.0	(48.5)	1.07	1.01
RHRF65BB-N-UUM	12	3.00E-04	(136.0)	2.0	(48.5)	1.07	1.01
RHRF55AX-R-UUM	8	3.00E-04	(136.0)	2.0	(48.5)	1.07	1.01
RHRF51BB-N-UUM	12	3.00E-04	(136.0)	2.0	(48.5)	1.07	1.01

RHRF74AA-V-UUM	8	3.00E-04	(136.0)	2.0	(48.5)	1.07	1.01
RHRF87BB-V-UUM	12	3.00E-04	(136.0)	2.0	(48.5)	1.07	1.01
CSCF008A-V-UUM	8	3.00E-04	(136.0)	2.0	(48.5)	1.07	1.01
RHRF47BB-V-UUM	12	3.00E-04	(136.0)	2.0	(48.5)	1.07	1.01
CSCF068B-V-UUM	12	3.00E-04	(136.0)	2.0	(48.5)	1.07	1.01
RHRF47AA-V-UUM	8	3.00E-04	(136.0)	2.0	(48.5)	1.07	1.01
RHRF88BX-R-UUM	12	3.00E-04	(136.0)	2.0	(48.5)	1.07	1.01
SCSF06AA-V-UUM	8	3.00E-04	(136.0)	2.0	(48.5)	1.07	1.01
RHRF87AA-V-UUM	8	3.00E-04	(136.0)	2.0	(48.5)	1.07	1.01
RHRF74BB-V-UUM	12	3.00E-04	(136.0)	2.0	(48.5)	1.07	1.01
RHRF64BB-V-UUM	12	3.00E-04	(136.0)	2.0	(48.5)	1.07	1.01
RHRF60BB-S-UUM	12	3.00E-04	(136.0)	2.0	(48.5)	1.07	1.01
RHRF55BX-R-UUM	12	3.00E-04	(136.0)	2.0	(48.5)	1.07	1.01
RHRF88AX-R-UUM	8	3.00E-04	(136.0)	2.0	(48.5)	1.07	1.01
RHRF64AA-V-UUM	8	3.00E-04	(136.0)	2.0	(48.5)	1.07	1.01
RHRF48AA-V-UUM	8	3.00E-04	(136.0)	2.0	(48.5)	1.07	1.01
RHRF65AA-N-UUM	8	3.00E-04	(136.0)	2.0	(48.5)	1.07	1.01
RHRF48BB-V-UUM	12	3.00E-04	(136.0)	2.0	(48.5)	1.07	1.01
RHRF60AA-S-UUM	8	3.00E-04	(136.0)	2.0	(48.5)	1.07	1.01
SCSF06BB-V-UUM	12	3.00E-04	(136.0)	2.0	(48.5)	1.07	1.01
CSCF068B-VCC-LF	15	5.00E-04	(112.5)	2.0	(63.5)	1.04	0.99
HCSF004C-VCC-LF	1	5.00E-04	(112.5)	2.0	(63.5)	1.04	0.99
HCSF015C-VCC-LF	1	5.00E-04	(112.5)	2.0	(63.5)	1.04	0.99
CSCF068A-VCC-LF	16	5.00E-04	(112.5)	2.0	(63.5)	1.04	0.99
RHRF48AA-VOO-LF	16	5.00E-04	(112.5)	2.0	(63.5)	1.04	0.99
RHRF48BB-VOO-LF	15	5.00E-04	(112.5)	2.0	(63.5)	1.04	0.99
FAP	240	6.00E-02	(42.0)	1.9	(67.0)	1.03	1.01
DG2A-GEN-LF-FTR	36	1.90E-02	(50.0)	1.6	(68.0)	1.00	1.00
Q8TG	120	9.50E-01	(16.5)	1.6	(69.0)	1.00	1.00
FS1	35	1.70E-01	(28.0)	1.6	(70.0)	1.31	1.00
FA10	36	1.10E-01	(33.0)	1.6	(71.0)	1.00	1.00
FAAA	36	6.40E-02	(40.5)	1.5	(72.0)	1.00	1.00
DG2A-GEN-LF-FTS	36	2.50E-02	(48.0)	1.5	(73.0)	1.00	1.00
LCSC002A-P-UUM	16	3.00E-03	(65.5)	1.5	(75.5)	1.15	1.08
RHRC003B-P-UUM	15	3.00E-03	(65.5)	1.5	(75.5)	1.15	1.08
RHRC02BB-P-UUM	15	3.00E-03	(65.5)	1.5	(75.5)	1.15	1.08
RHRC02AA-P-UUM	16	3.00E-03	(65.5)	1.5	(75.5)	1.15	1.08
RHR301AX-STR	16	1.10E-04	(159.5)	1.4	(78.5)	1.00	1.00
RHR301BX-STR	15	1.10E-04	(159.5)	1.4	(78.5)	1.00	1.00
FA1	35	3.00E-01	(25.5)	1.4	(80.0)	1.19	1.00
Q9TG	120	9.10E-01	(19.0)	1.4	(81.0)	1.00	1.00
LPCI-BETA	20	1.10E-01	(33.0)	1.3	(82.0)	1.00	1.00
C2DG01P-PMS-CC	15	2.50E-03	(77.0)	1.3	(89.0)	1.24	1.08
NWVY01CA-FMS-CC	8	2.50E-03	(77.0)	1.3	(89.0)	1.24	1.08
C0DG01P-PMS-CC	8	2.50E-03	(77.0)	1.3	(89.0)	1.24	1.08
LPCI-PMS-CM	20	2.50E-03	(77.0)	1.3	(89.0)	1.24	1.08
LPCI-MOV-CM2	20	2.50E-03	(77.0)	1.3	(89.0)	1.24	1.08

LPCI-MOV-CM1	20	2.50E-03	(77.0)	1.3	(89.0)	1.24	1.08
SWVY02CC-FMS-CC	1	2.50E-03	(77.0)	1.3	(89.0)	1.24	1.08
HCSC001C-PMS-CS	1	2.50E-03	(77.0)	1.3	(89.0)	1.24	1.08
CSCC002-PMS-CC	1	2.50E-03	(77.0)	1.3	(89.0)	1.24	1.08
SEVY03CB-FMS-CC	15	2.50E-03	(77.0)	1.3	(89.0)	1.24	1.08
RHRF48BB-VOO-CC	3	2.50E-03	(77.0)	1.3	(89.0)	1.24	1.08
RHRB01BB-BOO-CC	15	2.50E-03	(77.0)	1.3	(89.0)	1.24	1.08
RHRB01AA-BOO-CC	8	2.50E-03	(77.0)	1.3	(89.0)	1.24	1.08
C0DG002-CCC-LF	8	1.00E-04	(166.5)	1.2	(97.5)	1.00	1.00
RHRF31BX-CCC-LF	12	1.00E-04	(166.5)	1.2	(97.5)	1.00	1.00
RHRF31AX-CCC-LF	8	1.00E-04	(166.5)	1.2	(97.5)	1.00	1.00
C2DGF002-CCC-LF	12	1.00E-04	(166.5)	1.2	(97.5)	1.00	1.00
Q12TG	150	9.70E-01	(14.5)	1.2	(100.0)	1.00	1.00
NWVY01CA-FMS-LF	8	5.40E-04	(105.0)	1.2	(102.0)	1.00	1.00
SWVY02CC-FMS-LF	1	5.40E-04	(105.0)	1.2	(102.0)	1.00	1.00
SEVY03CB-FMS-LF	12	5.40E-04	(105.0)	1.2	(102.0)	1.00	1.00
Q3TG	240	9.70E-01	(14.5)	1.2	(104.0)	1.00	1.00
LAMBDA-CSR	114	1.00E-02	(54.5)	1.2	(105.0)	1.00	0.98
LPCI-MOV-BETA	40	3.00E-02	(47.0)	1.1	(106.0)	1.00	1.00
RHRB03BX-BCO-LF	12	2.40E-05	(196.5)	1.1	(107.5)	1.00	1.00
RHRB03AX-BCO-LF	8	2.40E-05	(196.5)	1.1	(107.5)	1.00	1.00
QWS	114	3.80E-02	(45.0)	1.1	(109.0)	1.00	1.00
CSCD300A-PLG-LF	8	1.20E-03	(86.5)	1.1	(110.5)	1.06	1.01
CSCD300B-PLG-LF	15	1.20E-03	(86.5)	1.1	(110.5)	1.06	1.01
Q1TG	35	8.30E-01	(21.0)	1.1	(112.0)	1.10	1.00
FA4	120	1.60E-02	(52.0)	1.0	(113.0)	1.00	1.00
Q7TG	120	9.50E-01	(16.5)	1.0	(114.0)	1.00	1.00
FR	1	1.00E-01	(35.0)	1.0	(115.0)	1.00	1.18
FA8	120	5.00E-03	(58.0)	1.0	(116.0)	1.00	1.00
EE-CSCD300B-PLG	12	7.20E-04	(98.5)	0.9	(118.5)	1.01	0.99
EE-CSCD300A-PLG	8	7.20E-04	(98.5)	0.9	(118.5)	1.01	0.99
EE-CSCD300-PLG	1	7.20E-04	(98.5)	0.9	(118.5)	1.01	0.99
EE-C2DG01F-PLG	12	7.20E-04	(98.5)	0.9	(118.5)	1.01	0.99
FA9	36	8.00E-02	(38.0)	0.9	(121.0)	1.00	1.00
C2DG01F-PLG-LF	15	5.80E-04	(102.0)	0.8	(123.0)	1.01	1.00
C0DG01F-PLG-LF	8	5.80E-04	(102.0)	0.8	(123.0)	1.01	1.00
CSCD300-PLG-LF	1	5.80E-04	(102.0)	0.8	(123.0)	1.01	1.00
FA5	53	8.40E-01	(20.0)	0.8	(125.0)	1.20	1.00
FA7	120	1.30E-01	(31.0)	0.8	(126.0)	1.00	1.06
Q5TG	114	9.80E-01	(12.5)	0.7	(127.0)	1.00	1.00
HC001CB-BCO-LF	1	8.40E-05	(172.5)	0.5	(131.5)	1.00	1.00
CSCB068X-BCO-LF	12	8.40E-05	(172.5)	0.5	(131.5)	1.00	1.00
1EB16212-BCO	12	8.40E-05	(172.5)	0.5	(131.5)	1.00	1.00
CCBF068A-BCO-LF	8	8.40E-05	(172.5)	0.5	(131.5)	1.00	1.00
1EB16211-BCO	8	8.40E-05	(172.5)	0.5	(131.5)	1.00	1.00
CCBC002-BCO-LF	1	8.40E-05	(172.5)	0.5	(131.5)	1.00	1.00
CCB2DG1P-BCO-LF	12	8.40E-05	(172.5)	0.5	(131.5)	1.00	1.00

CCB0DG1P-BCO-LF	8	8.40E-05 (172.5)	0.5	(131.5)	1.00	1.00
1EB36Y2X-BCO-LF	2	7.20E-05 (185.5)	0.5	(144.5)	1.00	1.00
1EB36Y1X-BCO-LF	12	7.20E-05 (185.5)	0.5	(144.5)	1.00	1.00
1EB235XA-BCO-LF	8	7.20E-05 (185.5)	0.5	(144.5)	1.00	1.00
1EB36XB-BCO-LF	12	7.20E-05 (185.5)	0.5	(144.5)	1.00	1.00
NWVB001X-BCO-LF	8	7.20E-05 (185.5)	0.5	(144.5)	1.00	1.00
1EB35Y2X-BCO-LF	8	7.20E-05 (185.5)	0.5	(144.5)	1.00	1.00
1EB235A-BCO-LF	10	7.20E-05 (185.5)	0.5	(144.5)	1.00	1.00
SWVB001X-BCO-LF	1	7.20E-05 (185.5)	0.5	(144.5)	1.00	1.00
1EB1Y22X-BCO	8	7.20E-05 (185.5)	0.5	(144.5)	1.00	1.00
SEVB001X-BCO-LF	12	7.20E-05 (185.5)	0.5	(144.5)	1.00	1.00
1EB35Y1X-BCO-LF	2	7.20E-05 (185.5)	0.5	(144.5)	1.00	1.00
1EB212YX-BCO-LF	12	7.20E-05 (185.5)	0.5	(144.5)	1.00	1.00
1EB2Y22X-BCO	12	7.20E-05 (185.5)	0.5	(144.5)	1.00	1.00
1EB211YX-BCO-LF	8	7.20E-05 (185.5)	0.5	(144.5)	1.00	1.00
1EB236B-BCO-LF	15	7.20E-05 (185.5)	0.5	(144.5)	1.00	1.00
1EB43C-BCO-LF	1	7.20E-05 (185.5)	0.5	(144.5)	1.00	1.00
1EB36YB-BCO-LF	15	7.20E-05 (185.5)	0.5	(144.5)	1.00	1.00
1EB235YA-BCO-LF	10	7.20E-05 (185.5)	0.5	(144.5)	1.00	1.00
HCSD001X-STR	1	3.80E-05 (195.0)	0.3	(154.0)	1.00	1.00
CONT-LEAK	1298	7.50E-01 (23.0)	0.2	(155.0)	0.95	0.90
R-OP-1	1	6.40E-02 (40.5)	0.0	(172.0)		
FA3	120	5.00E-02 (44.0)	0.0	(172.0)		
FA2	114	1.50E-01 (30.0)	0.0	(172.0)		
FA11	114	1.10E-01 (33.0)	0.0	(172.0)		
Q6TG	114	9.80E-01 (12.5)	0.0	(172.0)		
Q2TG	114	9.90E-01 (10.5)	0.0	(172.0)		
C2DG01F-S-UUM	12	3.00E-04 (136.0)	0.0	(172.0)		
Q11TG	120	9.90E-01 (10.5)	0.0	(172.0)		
Q10TG	36	9.30E-01 (18.0)	0.0	(172.0)		
PC02AAAX-AOO-LFO	8	3.00E-04 (136.0)	0.0	(172.0)		
OPFAIL-VENT-2H	54	2.10E-03 (84.0)	0.0	(172.0)		
C0DG01P-PMS-LF	16	1.10E-03 (90.5)	0.0	(172.0)		
NWVY01AX-A-UUM	8	3.00E-04 (136.0)	0.0	(172.0)		
C0DG01F-S-UUM	8	3.00E-04 (136.0)	0.0	(172.0)		
CSCD300B-S-UUM	12	3.00E-04 (136.0)	0.0	(172.0)		
SEVY03AX-A-UUM	12	3.00E-04 (136.0)	0.0	(172.0)		
CSCD300A-S-UUM	8	3.00E-04 (136.0)	0.0	(172.0)		
RHRH01BX-H-UUM	12	3.00E-04 (136.0)	0.0	(172.0)		
RHRH01AX-H-UUM	8	3.00E-04 (136.0)	0.0	(172.0)		
HCSC001C-PMS-LF	1	1.10E-03 (90.5)	0.0	(172.0)		
CSCC002-PMS-LF	1	1.10E-03 (90.5)	0.0	(172.0)		
2DG1PK18-ROO-LFO	12	5.00E-04 (112.5)	0.0	(172.0)		
2DG01PSC-OOO-LFO	12	3.00E-04 (136.0)	0.0	(172.0)		
FAZ	120	8.20E-02 (37.0)	0.0	(172.0)		
2DG01PK18CA-LFOO	12	3.00E-04 (136.0)	0.0	(172.0)		
FAS	150	2.20E-02 (49.0)	0.0	(172.0)		

FAAC	120	1.60E-03	(85.0)	0.0	(172.0)
RHRC02BB-PMS-LF	15	1.10E-03	(90.5)	0.0	(172.0)
RHRC02AA-PMS-LF	16	1.10E-03	(90.5)	0.0	(172.0)
RHRB01BB-BOO-LF	15	5.00E-04	(112.5)	0.0	(172.0)
FA6	114	1.80E-01	(27.0)	0.0	(172.0)
RHRB01AA-BOO-LF	16	5.00E-04	(112.5)	0.0	(172.0)
C2DG01P-PMS-LF	15	1.10E-03	(90.5)	0.0	(172.0)
EE-CST-LVL	2	1.00E+00	(5.0)		
NOFLOW-RHR-B1	27	1.00E+00	(5.0)		
NOFLOW-RHR-A1	24	1.00E+00	(5.0)		
NLOSP	72	1.00E+00	(5.0)		
SCSF06BB-DENER	51	1.00E+00	(5.0)		
SCSF06AA-DENER	40	1.00E+00	(5.0)		
FLOW-RHR-B3	42	1.00E+00	(5.0)		
FLOW-RHR-A3	32	1.00E+00	(5.0)		
1EDC2DEP-FROP-4	12	1.00E+00	(5.0)		

TOTAL FIRE SEQUENCE

CUT SET NUMBERS, CUT SET ORDERS, CUT SET FREQUENCIES,
CUMULATIVE NORMALIZED CUT SET FREQUENCIES AND CUT SETS
FOR TOP EVENT FIRETOT WITH TOP EVENT FREQUENCY 3.38E-05

(THE FIRST COLUMN OF NUMBERS IS THE LINE NUMBERS FOR THE FILE TEMACSETS.DNF)

2	1	3	2.18E-05	0.64468	FR	*	LAMBDA-CR	*	R-OP-1	+				
3	575	7	5.51E-07	0.66101	CONT-LEAK	*	FA6	*	FS2	*	LAMBDA-SVGR	*		
4					Q6TG	*	RHRH01AX-HTX-LFB	*	SUR-002-L	+				
5	36	7	5.17E-07	0.67632	FA1	*	FAE	*	FS1	*	LAMBDA-TB	*		
6					/OPFAIL-VENT-2H	*	Q1TG	*	SUR-007-V	+				
7	436	8	4.08E-07	0.68842	FA5	*	FAT	*	FS2	*	LAMBDA-AUX	*		
8					/OPFAIL-VENT-2H	*	Q4TG	*	RHRH01BX-HTX-LFB	*	SUR-007-V	+		
9	835	7	3.86E-07	0.69985	CONT-LEAK	*	FA7	*	FS2	*	LAMBDA-SVGR	*		
10					Q8TG	*	RHRH01BX-HTX-LFB	*	SUR-002-L	+				
11	581	7	2.67E-07	0.70775	C0DG01P-P-UUM	*	CONT-LEAK	*	FA6	*	FS2	*		
12					LAMBDA-SVGR	*	Q6TG	*	SUR-002-L	+				
13	607	8	2.67E-07	0.71565	CONT-LEAK	*	FA6	*	FS2	*	LAMBDA-SVGR	*		
14					Q6TG	*	RHRC02AA-P-UUM	*	SCSF06AA-DENER	*	SUR-002-L	+		
15	589	7	2.67E-07	0.72355	CONT-LEAK	*	FA6	*	FS2	*	LAMBDA-SVGR	*		
16					Q6TG	*	RHRC02AA-P-NDUUM	*	SUR-002-L	+				
17	586	7	2.67E-07	0.73146	CONT-LEAK	*	FA6	*	FS2	*	LAMBDA-SVGR	*		
18					LCSC002A-P-UUM	*	Q6TG	*	SUR-002-L	+				
19	602	7	2.22E-07	0.73804	C0DG01P-PMS-CC	*	CONT-LEAK	*	FA6	*	FS2	*		
20					LAMBDA-SVGR	*	Q6TG	*	SUR-002-L	+				
21	599	7	2.22E-07	0.74463	CONT-LEAK	*	FA6	*	FS2	*	LAMBDA-SVGR	*		
22					NWVY01CA-FMS-CC	*	Q6TG	*	SUR-002-L	+				
23	606	7	2.22E-07	0.75121	CONT-LEAK	*	FA6	*	FS2	*	LAMBDA-SVGR	*		
24					Q6TG	*	RHRB01AA-BOO-CC	*	SUR-002-L	+				
25	430	9	1.98E-07	0.75707	FA5	*	FAT	*	FS2	*	LAMBDA-AUX	*		
26					/OPFAIL-VENT-2H	*	Q4TG	*	RHRC02BB-P-UUM	*	SCSF06BB-DENER	*		
27					SUR-007-V	+								
28	431	8	1.98E-07	0.76292	FA5	*	FAT	*	FS2	*	LAMBDA-AUX	*		
29					/OPFAIL-VENT-2H	*	Q4TG	*	RHRC02BB-P-NDUUM	*	SUR-007-V	+		
30	437	8	1.98E-07	0.76878	C2DG01P-P-UUM	*	FA5	*	FAT	*	FS2	*		
31					LAMBDA-AUX	*	/OPFAIL-VENT-2H	*	Q4TG	*	SUR-007-V	+		
32	433	8	1.98E-07	0.77463	FA5	*	FAT	*	FS2	*	LAMBDA-AUX	*		
33					/OPFAIL-VENT-2H	*	Q4TG	*	RHRC003B-P-UUM	*	SUR-007-V	+		
34	797	7	1.87E-07	0.78016	C2DG01P-P-UUM	*	CONT-LEAK	*	FA7	*	FS2	*		
35					LAMBDA-SVGR	*	Q8TG	*	SUR-002-L	+				
36	804	7	1.87E-07	0.78570	CONT-LEAK	*	FA7	*	FS2	*	LAMBDA-SVGR	*		
37					Q8TG	*	RHRC003B-P-UUM	*	SUR-002-L	+				
38	828	7	1.87E-07	0.79123	CONT-LEAK	*	FA7	*	FS2	*	LAMBDA-SVGR	*		
39					Q8TG	*	RHRC02BB-P-NDUUM	*	SUR-002-L	+				

40	805	8	1.87E-07	0.79676	CONT-LEAK	*	FA7	*	FS2	*	LAMBDA-SVGR	*
41					Q8TG	*	RHRC02BB-P-UUM	*	SCSF06BB-DENER	*	SUR-002-L	+
42	435	8	1.65E-07	0.80164	FA5	*	FAT	*	FS2	*	LAMBDA-AUX	*
43					/OPFAIL-VENT-2H	*	Q4TG	*	SEVY03CB-FMS-CC	*	SUR-007-V	+
44	438	9	1.65E-07	0.80652	FA5	*	FAT	*	FLOW-RHR-B3	*	FS2	*
45					LAMBDA-AUX	*	/OPFAIL-VENT-2H	*	Q4TG	*	RHRF48BB-VOO-CC	*
46					SUR-007-V	+						
47	439	8	1.65E-07	0.81140	FA5	*	FAT	*	FS2	*	LAMBDA-AUX	*
48					/OPFAIL-VENT-2H	*	Q4TG	*	RHRB01BB-BOO-CC	*	SUR-007-V	+
49	428	8	1.65E-07	0.81628	C2DG01P-PMS-CC	*	FA5	*	FAT	*	FS2	*
50					LAMBDA-AUX	*	/OPFAIL-VENT-2H	*	Q4TG	*	SUR-007-V	+
51	792	7	1.56E-07	0.82089	CONT-LEAK	*	FA7	*	FS2	*	LAMBDA-SVGR	*
52					Q8TG	*	SEVY03CB-FMS-CC	*	SUR-002-L	+		
53	841	7	1.56E-07	0.82550	C2DG01P-PMS-CC	*	CONT-LEAK	*	FA7	*	FS2	*
54					LAMBDA-SVGR	*	Q8TG	*	SUR-002-L	+		
55	833	7	1.56E-07	0.83011	CONT-LEAK	*	FA7	*	FS2	*	LAMBDA-SVGR	*
56					Q8TG	*	RHRB01BB-BOO-CC	*	SUR-002-L	+		
57	612	7	1.07E-07	0.83327	CONT-LEAK	*	CSCD300A-PLG-LF	*	FA6	*	FS2	*
58					LAMBDA-SVGR	*	Q6TG	*	SUR-002-L	+		
59	461	6	1.02E-07	0.83629	CONT-LEAK	*	FR1	*	LAMBDA-SVGR	*	Q5TG	*
60					RHRH01AX-HTX-LFB	*	SUR-002-L	+				
61	715	6	9.90E-08	0.83922	CONT-LEAK	*	FR1	*	LAMBDA-SVGR	*	Q7TG	*
62					RHRH01BX-HTX-LFB	*	SUR-002-L	+				
63	579	7	9.78E-08	0.84212	C0DG01P-PMS-LF	*	CONT-LEAK	*	FA6	*	FS2	*
64					LAMBDA-SVGR	*	Q6TG	*	SUR-002-L	+		
65	563	7	9.78E-08	0.84502	CONT-LEAK	*	FA6	*	FS2	*	LAMBDA-SVGR	*
66					Q6TG	*	RHRC02AA-PMS-LF	*	SUR-002-L	+		
67	427	8	7.91E-08	0.84736	CSCD300B-PLG-LF	*	FA5	*	FAT	*	FS2	*
68					LAMBDA-AUX	*	/OPFAIL-VENT-2H	*	Q4TG	*	SUR-007-V	+
69	850	7	7.47E-08	0.84957	CONT-LEAK	*	CSCD300B-PLG-LF	*	FA7	*	FS2	*
70					LAMBDA-SVGR	*	Q8TG	*	SUR-002-L	+		
71	560	7	7.47E-08	0.85179	CONT-LEAK	*	FA6	*	FS2	*	LAMBDA-SVGR	*
72					NWVY01AX-ACX-LFI	*	Q6TG	*	SUR-002-L	+		
73	440	8	7.25E-08	0.85393	C2DG01P-PMS-LF	*	FA5	*	FAT	*	FS2	*
74					LAMBDA-AUX	*	/OPFAIL-VENT-2H	*	Q4TG	*	SUR-007-V	+
75	434	8	7.25E-08	0.85608	FA5	*	FAT	*	FS2	*	LAMBDA-AUX	*
76					/OPFAIL-VENT-2H	*	Q4TG	*	RHRC02BB-PMS-LF	*	SUR-007-V	+
77	844	7	6.85E-08	0.85811	C2DG01P-PMS-LF	*	CONT-LEAK	*	FA7	*	FS2	*
78					LAMBDA-SVGR	*	Q8TG	*	SUR-002-L	+		
79	809	7	6.85E-08	0.86014	CONT-LEAK	*	FA7	*	FS2	*	LAMBDA-SVGR	*
80					Q8TG	*	RHRC02BB-PMS-LF	*	SUR-002-L	+		
81	569	7	6.40E-08	0.86203	CONT-LEAK	*	EE-CSCD300A-PLG	*	FA6	*	FS2	*
82					LAMBDA-SVGR	*	Q6TG	*	SUR-002-L	+		
83	1074	6	6.36E-08	0.86392	CONT-LEAK	*	FAAC	*	LAMBDA-AUX	*	Q11TG	*
84					RHRH01BX-HTX-LFB	*	SUR-002-L	+				
85	819	7	5.23E-08	0.86547	CONT-LEAK	*	FA7	*	FS2	*	LAMBDA-SVGR	*
86					Q8TG	*	SEVY03AX-ACX-LFI	*	SUR-002-L	+		

87	591	7	5.16E-08	0.86700	C0DG01F-PLG-LF	*	CONT-LEAK	*	FA6	*	FS2	*
88					LAMBDA-SVGR	*	Q6TG	*	SUR-002-L	+		
89	467	6	4.94E-08	0.86846	C0DG01P-P-UUM	*	CONT-LEAK	*	FR1	*	LAMBDA-SVGR	*
90					Q5TG	*	SUR-002-L	+				
91	472	6	4.94E-08	0.86992	CONT-LEAK	*	FR1	*	LAMBDA-SVGR	*	LCSC002A-P-UUM	*
92					Q5TG	*	SUR-002-L	+				
93	493	7	4.94E-08	0.87139	CONT-LEAK	*	FR1	*	LAMBDA-SVGR	*	Q5TG	*
94					RHRC02AA-P-UUM	*	SCSF06AA-DENER	*	SUR-002-L	+		
95	475	6	4.94E-08	0.87285	CONT-LEAK	*	FR1	*	LAMBDA-SVGR	*	Q5TG	*
96					RHRC02AA-P-NDUUM	*	SUR-002-L	+				
97	597	7	4.80E-08	0.87427	CONT-LEAK	*	FA6	*	FS2	*	LAMBDA-SVGR	*
98					NWVY01CA-FMS-LF	*	Q6TG	*	SUR-002-L	+		
99	677	6	4.79E-08	0.87569	C2DG01P-P-UUM	*	CONT-LEAK	*	FR1	*	LAMBDA-SVGR	*
100					Q7TG	*	SUR-002-L	+				
101	685	7	4.79E-08	0.87711	CONT-LEAK	*	FR1	*	LAMBDA-SVGR	*	Q7TG	*
102					RHRC02BB-P-UUM	*	SCSF06BB-DENER	*	SUR-002-L	+		
103	708	6	4.79E-08	0.87853	CONT-LEAK	*	FR1	*	LAMBDA-SVGR	*	Q7TG	*
104					RHRC02BB-P-NDUUM	*	SUR-002-L	+				
105	684	6	4.79E-08	0.87995	CONT-LEAK	*	FR1	*	LAMBDA-SVGR	*	Q7TG	*
106					RHRC003B-P-UUM	*	SUR-002-L	+				
107	829	7	4.48E-08	0.88127	CONT-LEAK	*	EE-CSCD300B-PLG	*	FA7	*	FS2	*
108					LAMBDA-SVGR	*	Q8TG	*	SUR-002-L	+		
109	823	7	4.48E-08	0.88260	CONT-LEAK	*	EE-C2DG01F-PLG	*	FA7	*	FS2	*
110					LAMBDA-SVGR	*	Q8TG	*	SUR-002-L	+		
111	587	7	4.45E-08	0.88392	CONT-LEAK	*	CSCF068A-VCC-LF	*	FA6	*	FS2	*
112					LAMBDA-SVGR	*	Q6TG	*	SUR-002-L	+		
113	611	7	4.45E-08	0.88523	CONT-LEAK	*	FA6	*	FS2	*	LAMBDA-SVGR	*
114					NWVY01CA-F-UUM	*	Q6TG	*	SUR-002-L	+		
115	573	7	4.45E-08	0.88655	CONT-LEAK	*	FA6	*	FS2	*	LAMBDA-SVGR	*
116					Q6TG	*	RHRB01AA-BOO-LF	*	SUR-002-L	+		
117	600	8	4.45E-08	0.88787	CONT-LEAK	*	FA6	*	FLOW-RHR-A3	*	FS2	*
118					LAMBDA-SVGR	*	Q6TG	*	RHRF48AA-VOO-LF	*	SUR-002-L	+
119	488	6	4.12E-08	0.88909	C0DG01P-PMS-CC	*	CONT-LEAK	*	FR1	*	LAMBDA-SVGR	*
120					Q5TG	*	SUR-002-L	+				
121	485	6	4.12E-08	0.89031	CONT-LEAK	*	FR1	*	LAMBDA-SVGR	*	NWVY01CA-FMS-CC	*
122					Q5TG	*	SUR-002-L	+				
123	492	6	4.12E-08	0.89153	CONT-LEAK	*	FR1	*	LAMBDA-SVGR	*	Q5TG	*
124					RHRB01AA-BOO-CC	*	SUR-002-L	+				
125	721	6	3.99E-08	0.89271	C2DG01P-PMS-CC	*	CONT-LEAK	*	FR1	*	LAMBDA-SVGR	*
126					Q7TG	*	SUR-002-L	+				
127	713	6	3.99E-08	0.89389	CONT-LEAK	*	FR1	*	LAMBDA-SVGR	*	Q7TG	*
128					RHRB01BB-BOO-CC	*	SUR-002-L	+				
129	672	6	3.99E-08	0.89507	CONT-LEAK	*	FR1	*	LAMBDA-SVGR	*	Q7TG	*
130					SEVY03CB-FMS-CC	*	SUR-002-L	+				
131	441	8	3.82E-08	0.89621	C2DG01F-PLG-LF	*	FA5	*	FAT	*	FS2	*
132					LAMBDA-AUX	*	/OPFAIL-VENT-2H	*	Q4TG	*	SUR-007-V	+

133	799	7	3.61E-08	0.89727	C2DG01F-PLG-LF	*	CONT-LEAK	*	FA7	*	FS2	*
134					LAMBDA-SVGR	*	Q8TG	*	SUR-002-L	+		
135	165	8	3.51E-08	0.89831	CONT-LEAK	*	FA3	*	FAP	*	FS2	*
136					LAMBDA-AUX	*	Q3TG	*	RHRH01BX-HTX-LFB	*	SUR-002-L	+
137	840	7	3.36E-08	0.89931	CONT-LEAK	*	FA7	*	FS2	*	LAMBDA-SVGR	*
138					Q8TG	*	SEVY03CB-FMS-LF	*	SUR-002-L	+		
139	442	8	3.29E-08	0.90029	CSCF068B-VCC-LF	*	FA5	*	FAT	*	FS2	*
140					LAMBDA-AUX	*	/OPFAIL-VENT-2H	*	Q4TG	*	SUR-007-V	+
141	429	8	3.29E-08	0.90126	FA5	*	FAT	*	FS2	*	LAMBDA-AUX	*
142					/OPFAIL-VENT-2H	*	Q4TG	*	RHRB01BB-BOO-LF	*	SUR-007-V	+
143	432	9	3.29E-08	0.90224	FA5	*	FAT	*	FLOW-RHR-B3	*	FS2	*
144					LAMBDA-AUX	*	/OPFAIL-VENT-2H	*	Q4TG	*	RHRF48BB-VOO-LF	*
145					SUR-007-V	+						
146	830	7	3.11E-08	0.90316	CONT-LEAK	*	CSCF068B-VCC-LF	*	FA7	*	FS2	*
147					LAMBDA-SVGR	*	Q8TG	*	SUR-002-L	+		
148	794	7	3.11E-08	0.90408	2DG1PK18-ROO-LFO	*	CONT-LEAK	*	FA7	*	FS2	*
149					LAMBDA-SVGR	*	Q8TG	*	SUR-002-L	+		
150	800	8	3.11E-08	0.90500	CONT-LEAK	*	FA7	*	FLOW-RHR-B3	*	FS2	*
151					LAMBDA-SVGR	*	Q8TG	*	RHRF48BB-VOO-LF	*	SUR-002-L	+
152	818	7	3.11E-08	0.90593	CONT-LEAK	*	FA7	*	FS2	*	LAMBDA-SVGR	*
153					Q8TG	*	SEVY03CB-F-UUM	*	SUR-002-L	+		
154	801	7	3.11E-08	0.90685	CONT-LEAK	*	FA7	*	FS2	*	LAMBDA-SVGR	*
155					Q8TG	*	RHRB01BB-BOO-LF	*	SUR-002-L	+		
156	1119	6	3.08E-08	0.90776	C2DG01P-P-UUM	*	CONT-LEAK	*	FAAC	*	LAMBDA-AUX	*
157					Q11TG	*	SUR-002-L	+				
158	1101	7	3.08E-08	0.90867	CONT-LEAK	*	FAAC	*	LAMBDA-AUX	*	Q11TG	*
159					RHRC02BB-P-UUM	*	SCSF06BB-DENER	*	SUR-002-L	+		
160	1080	6	3.08E-08	0.90958	CONT-LEAK	*	FAAC	*	LAMBDA-AUX	*	Q11TG	*
161					RHRC02BB-P-NDUUM	*	SUR-002-L	+				
162	1090	6	3.08E-08	0.91050	CONT-LEAK	*	FAAC	*	LAMBDA-AUX	*	Q11TG	*
163					RHRC003B-P-UUM	*	SUR-002-L	+				
164	1241	8	2.83E-08	0.91133	CONT-LEAK	*	FA11	*	FAS	*	FS2	*
165					LAMBDA-AUX	*	Q12TG	*	RHRH01AX-HTX-LFB	*	SUR-002-L	+
166	572	7	2.67E-08	0.91213	CONT-LEAK	*	FA6	*	FS2	*	LAMBDA-SVGR	*
167					Q6TG	*	RHRH01AX-H-UUM	*	SUR-002-L	+		
168	574	7	2.67E-08	0.91292	CONT-LEAK	*	FA6	*	FS2	*	LAMBDA-SVGR	*
169					Q6TG	*	RHRF55AX-R-UUM	*	SUR-002-L	+		
170	576	8	2.67E-08	0.91371	CONT-LEAK	*	FA6	*	FS2	*	LAMBDA-SVGR	*
171					Q6TG	*	RHRF47AA-V-UUM	*	SCSF06AA-DENER	*	SUR-002-L	+
172	595	7	2.67E-08	0.91450	CONT-LEAK	*	FA6	*	FS2	*	LAMBDA-SVGR	*
173					Q6TG	*	RHRF51AA-N-UUM	*	SUR-002-L	+		
174	562	8	2.67E-08	0.91529	CONT-LEAK	*	FA6	*	FS2	*	LAMBDA-SVGR	*
175					Q6TG	*	RHRF88AX-R-UUM	*	SCSF06AA-DENER	*	SUR-002-L	+
176	598	7	2.67E-08	0.91608	CONT-LEAK	*	CSCF008A-V-UUM	*	FA6	*	FS2	*
177					LAMBDA-SVGR	*	Q6TG	*	SUR-002-L	+		
178	566	7	2.67E-08	0.91687	C0DG01F-S-UUM	*	CONT-LEAK	*	FA6	*	FS2	*
179					LAMBDA-SVGR	*	Q6TG	*	SUR-002-L	+		

180	590	7	2.67E-08	0.91766	CONT-LEAK	*	CSCD300A-S-UUM	*	FA6	*	FS2	*
181					LAMBDA-SVGR	*	Q6TG	*	SUR-002-L	+		
182	588	8	2.67E-08	0.91845	CONT-LEAK	*	FA6	*	FS2	*	LAMBDA-SVGR	*
183					Q6TG	*	RHRF64AA-V-UUM	*	SCSF06AA-DENER	*	SUR-002-L	+
184	559	7	2.67E-08	0.91924	CONT-LEAK	*	FA6	*	FS2	*	LAMBDA-SVGR	*
185					Q6TG	*	RHRF87AA-V-UUM	*	SUR-002-L	+		
186	565	7	2.67E-08	0.92003	CONT-LEAK	*	FA6	*	FS2	*	LAMBDA-SVGR	*
187					Q6TG	*	RHRF60AA-S-UUM	*	SUR-002-L	+		
188	584	7	2.67E-08	0.92082	CONT-LEAK	*	FA6	*	FS2	*	LAMBDA-SVGR	*
189					Q6TG	*	RHRF74AA-V-UUM	*	SUR-002-L	+		
190	570	7	2.67E-08	0.92161	CONT-LEAK	*	FA6	*	FS2	*	LAMBDA-SVGR	*
191					Q6TG	*	SCSF06AA-V-UUM	*	SUR-002-L	+		
192	585	7	2.67E-08	0.92240	CONT-LEAK	*	FA6	*	FS2	*	LAMBDA-SVGR	*
193					Q6TG	*	RHRF65AA-N-UUM	*	SUR-002-L	+		
194	578	7	2.67E-08	0.92319	CONT-LEAK	*	FA6	*	FS2	*	LAMBDA-SVGR	*
195					NWVY01AX-A-UUM	*	Q6TG	*	SUR-002-L	+		
196	561	7	2.67E-08	0.92398	CONT-LEAK	*	FA6	*	FS2	*	LAMBDA-SVGR	*
197					PC02AAAX-AOO-LFO	*	Q6TG	*	SUR-002-L	+		
198	593	8	2.67E-08	0.92477	CONT-LEAK	*	FA6	*	FLOW-RHR-A3	*	FS2	*
199					LAMBDA-SVGR	*	Q6TG	*	RHRF48AA-V-UUM	*	SUR-002-L	+
200	285	8	2.62E-08	0.92554	CONT-LEAK	*	FA4	*	FAP	*	FS3	*
201					LAMBDA-AUX	*	Q3TG	*	RHRH01BX-HTX-LFB	*	SUR-002-L	+
202	1127	6	2.57E-08	0.92630	CONT-LEAK	*	FAAC	*	LAMBDA-AUX	*	Q11TG	*
203					SEVY03CB-FMS-CC	*	SUR-002-L	+				
204	1121	6	2.57E-08	0.92706	CONT-LEAK	*	FAAC	*	LAMBDA-AUX	*	Q11TG	*
205					RHRB01BB-BOO-CC	*	SUR-002-L	+				
206	1078	6	2.57E-08	0.92782	C2DG01P-PMS-CC	*	CONT-LEAK	*	FAAC	*	LAMBDA-AUX	*
207					Q11TG	*	SUR-002-L	+				
208	603	8	2.44E-08	0.92855	CONT-LEAK	*	FA6	*	FS2	*	LAMBDA-SVGR	*
209					LPCI-BETA	*	LPCI-PMS-CM	*	Q6TG	*	SUR-002-L	+
210	632	7	2.07E-08	0.92916	/CONT-LEAK	*	FA6	*	FS2	*	LAMBDA-SVGR	*
211					Q6TG	*	RHRH01AX-HTX-LFB	*	SUR-027-R	+		
212	498	6	1.98E-08	0.92975	CONT-LEAK	*	CSCD300A-PLG-LF	*	FR1	*	LAMBDA-SVGR	*
213					Q5TG	*	SUR-002-L	+				
214	730	6	1.92E-08	0.93031	CONT-LEAK	*	CSCD300B-PLG-LF	*	FR1	*	LAMBDA-SVGR	*
215					Q7TG	*	SUR-002-L	+				
216	808	7	1.87E-08	0.93087	CONT-LEAK	*	CSCF068B-V-UUM	*	FA7	*	FS2	*
217					LAMBDA-SVGR	*	Q8TG	*	SUR-002-L	+		
218	832	7	1.87E-08	0.93142	2DG01PK18CA-LFOO	*	CONT-LEAK	*	FA7	*	FS2	*
219					LAMBDA-SVGR	*	Q8TG	*	SUR-002-L	+		
220	820	7	1.87E-08	0.93197	CONT-LEAK	*	CSCD300B-S-UUM	*	FA7	*	FS2	*
221					LAMBDA-SVGR	*	Q8TG	*	SUR-002-L	+		
222	825	7	1.87E-08	0.93253	C2DG01F-S-UUM	*	CONT-LEAK	*	FA7	*	FS2	*
223					LAMBDA-SVGR	*	Q8TG	*	SUR-002-L	+		
224	843	7	1.87E-08	0.93308	2DG01PSC-OOO-LFO	*	CONT-LEAK	*	FA7	*	FS2	*
225					LAMBDA-SVGR	*	Q8TG	*	SUR-002-L	+		

226	824	7	1.87E-08	0.93363	CONT-LEAK	*	FA7	*	FS2	*	LAMBDA-SVGR	*	
227					Q8TG	*	RHRF74BB-V-UUM	*	SUR-002-L	+			
228	821	8	1.87E-08	0.93419	CONT-LEAK	*	FA7	*	FLOW-RHR-B3	*	FS2	*	
229					LAMBDA-SVGR	*	Q8TG	*	RHRF48BB-V-UUM	*	SUR-002-L	+	
230	813	7	1.87E-08	0.93474	CONT-LEAK	*	FA7	*	FS2	*	LAMBDA-SVGR	*	
231					Q8TG	*	RHRF55BX-R-UUM	*	SUR-002-L	+			
232	816	8	1.87E-08	0.93529	CONT-LEAK	*	FA7	*	FS2	*	LAMBDA-SVGR	*	
233					Q8TG	*	RHRF47BB-V-UUM	*	SCSF06BB-DENER	*	SUR-002-L	+	
234	834	7	1.87E-08	0.93585	CONT-LEAK	*	FA7	*	FS2	*	LAMBDA-SVGR	*	
235					Q8TG	*	RHRF51BB-N-UUM	*	SUR-002-L	+			
236	798	7	1.87E-08	0.93640	CONT-LEAK	*	FA7	*	FS2	*	LAMBDA-SVGR	*	
237					Q8TG	*	RHRH01BX-H-UUM	*	SUR-002-L	+			
238	817	8	1.87E-08	0.93695	CONT-LEAK	*	FA7	*	FS2	*	LAMBDA-SVGR	*	
239					Q8TG	*	RHRF88BX-R-UUM	*	SCSF06BB-DENER	*	SUR-002-L	+	
240	831	8	1.87E-08	0.93751	CONT-LEAK	*	FA7	*	FS2	*	LAMBDA-SVGR	*	
241					Q8TG	*	RHRF64BB-V-UUM	*	SCSF06BB-DENER	*	SUR-002-L	+	
242	812	7	1.87E-08	0.93806	CONT-LEAK	*	FA7	*	FS2	*	LAMBDA-SVGR	*	
243					Q8TG	*	RHRF87BB-V-UUM	*	SUR-002-L	+			
244	807	7	1.87E-08	0.93861	CONT-LEAK	*	FA7	*	FS2	*	LAMBDA-SVGR	*	
245					Q8TG	*	RHRF65BB-N-UUM	*	SUR-002-L	+			
246	806	7	1.87E-08	0.93917	CONT-LEAK	*	FA7	*	FS2	*	LAMBDA-SVGR	*	
247					Q8TG	*	SCSF06BB-V-UUM	*	SUR-002-L	+			
248	814	7	1.87E-08	0.93972	CONT-LEAK	*	FA7	*	FS2	*	LAMBDA-SVGR	*	
249					Q8TG	*	SEVY03AX-A-UUM	*	SUR-002-L	+			
250	827	7	1.87E-08	0.94027	CONT-LEAK	*	FA7	*	FS2	*	LAMBDA-SVGR	*	
251					Q8TG	*	RHRF60BB-S-UUM	*	SUR-002-L	+			
252	465	6	1.81E-08	0.94081	C0DG01P-PMS-LF	*	CONT-LEAK	*	FR1	*	LAMBDA-SVGR	*	
253					Q5TG	*	SUR-002-L	+					
254	449	6	1.81E-08	0.94135	CONT-LEAK	*	FR1	*	LAMBDA-SVGR	*	Q5TG	*	
255					RHRC02AA-PMS-LF	*	SUR-002-L	+					
256	13	6	1.79E-08	0.94187	FA1	*	FAE	*	FS1	*	HCSC001C-P-UUM	*	
257					LAMBDA-TB	*	Q1TG	+					
258	6	6	1.79E-08	0.94240	CSCC002-P-UUM	*	FA1	*	FAE	*	FS1	*	
259					LAMBDA-TB	*	Q1TG	+					
260	724	6	1.76E-08	0.94292	C2DG01P-PMS-LF	*	CONT-LEAK	*	FR1	*	LAMBDA-SVGR	*	
261					Q7TG	*	SUR-002-L	+					
262	689	6	1.76E-08	0.94344	CONT-LEAK	*	FR1	*	LAMBDA-SVGR	*	Q7TG	*	
263					RHRC02BB-PMS-LF	*	SUR-002-L	+					
264	847	8	1.71E-08	0.94395	CONT-LEAK	*	FA7	*	FS2	*	LAMBDA-SVGR	*	
265					LPCI-BETA	*	LPCI-PMS-CM	*	Q8TG	*	SUR-002-L	+	
266	206	8	1.70E-08	0.94445	CONT-LEAK	*	FA3	*	FAP	*	FS2	*	
267					LAMBDA-AUX	*	Q3TG	*	RHRC02BB-P-NDUUM	*	SUR-002-L	+	
268	204	8	1.70E-08	0.94496	C2DG01P-P-UUM	*	CONT-LEAK	*	FA3	*	FAP	*	
269					FS2	*	LAMBDA-AUX	*	Q3TG	*	SUR-002-L	+	
270	182	8	1.70E-08	0.94546	CONT-LEAK	*	FA3	*	FAP	*	FS2	*	
271					LAMBDA-AUX	*	Q3TG	*	RHRC003B-P-UUM	*	SUR-002-L	+	

272	186	9	1.70E-08	0.94596	CONT-LEAK	*	FA3	*	FAP	*	FS2	*
273					LAMBDA-AUX	*	Q3TG	*	RHRC02BB-P-UUM	*	SCSF06BB-DENER	*
274					SUR-002-L	+						
275	19	6	1.49E-08	0.94640	FA1	*	FAE	*	FS1	*	LAMBDA-TB	*
276					Q1TG	*	SWVY02CC-FMS-CC	+				
277	4	6	1.49E-08	0.94684	CSCC002-PMS-CC	*	FA1	*	FAE	*	FS1	*
278					LAMBDA-TB	*	Q1TG	+				
279	11	6	1.49E-08	0.94728	FA1	*	FAE	*	FS1	*	HCSC001C-PMS-CS	*
280					LAMBDA-TB	*	Q1TG	+				
281	895	7	1.45E-08	0.94771	/CONT-LEAK	*	FA7	*	FS2	*	LAMBDA-SVGR	*
282					Q8TG	*	RHRH01BX-HTX-LFB	*	SUR-027-R	+		
283	201	8	1.41E-08	0.94813	C2DG01P-PMS-CC	*	CONT-LEAK	*	FA3	*	FAP	*
284					FS2	*	LAMBDA-AUX	*	Q3TG	*	SUR-002-L	+
285	151	8	1.41E-08	0.94855	CONT-LEAK	*	FA3	*	FAP	*	FS2	*
286					LAMBDA-AUX	*	Q3TG	*	SEVY03CB-FMS-CC	*	SUR-002-L	+
287	208	8	1.41E-08	0.94897	CONT-LEAK	*	FA3	*	FAP	*	FS2	*
288					LAMBDA-AUX	*	Q3TG	*	RHRB01BB-BOO-CC	*	SUR-002-L	+
289	446	6	1.38E-08	0.94938	CONT-LEAK	*	FR1	*	LAMBDA-SVGR	*	NWVY01AX-ACX-LFI	*
290					Q5TG	*	SUR-002-L	+				
291	1247	8	1.37E-08	0.94979	C0DG01P-P-UUM	*	CONT-LEAK	*	FA11	*	FAS	*
292					FS2	*	LAMBDA-AUX	*	Q12TG	*	SUR-002-L	+
293	1255	8	1.37E-08	0.95019	CONT-LEAK	*	FA11	*	FAS	*	FS2	*
294					LAMBDA-AUX	*	Q12TG	*	RHRC02AA-P-NDUUM	*	SUR-002-L	+
295	1252	8	1.37E-08	0.95060	CONT-LEAK	*	FA11	*	FAS	*	FS2	*
296					LAMBDA-AUX	*	LCSC002A-P-UUM	*	Q12TG	*	SUR-002-L	+
297	1273	9	1.37E-08	0.95100	CONT-LEAK	*	FA11	*	FAS	*	FS2	*
298					LAMBDA-AUX	*	Q12TG	*	RHRC02AA-P-UUM	*	SCSF06AA-DENER	*
299					SUR-002-L	+						
300	699	6	1.34E-08	0.95140	CONT-LEAK	*	FR1	*	LAMBDA-SVGR	*	Q7TG	*
301					SEVY03AX-ACX-LFI	*	SUR-002-L	+				
302	324	8	1.27E-08	0.95178	C2DG01P-P-UUM	*	CONT-LEAK	*	FA4	*	FAP	*
303					FS3	*	LAMBDA-AUX	*	Q3TG	*	SUR-002-L	+
304	326	8	1.27E-08	0.95215	CONT-LEAK	*	FA4	*	FAP	*	FS3	*
305					LAMBDA-AUX	*	Q3TG	*	RHRC02BB-P-NDUUM	*	SUR-002-L	+
306	306	9	1.27E-08	0.95253	CONT-LEAK	*	FA4	*	FAP	*	FS3	*
307					LAMBDA-AUX	*	Q3TG	*	RHRC02BB-P-UUM	*	SCSF06BB-DENER	*
308					SUR-002-L	+						
309	302	8	1.27E-08	0.95290	CONT-LEAK	*	FA4	*	FAP	*	FS3	*
310					LAMBDA-AUX	*	Q3TG	*	RHRC003B-P-UUM	*	SUR-002-L	+
311	37	8	1.26E-08	0.95327	CONT-LEAK	*	FA2	*	FS2	*	LAMBDA-CSR	*
312					Q2TG	*	QWS	*	RHRH01AX-HTX-LFB	*	SUR-002-L	+
313	1093	6	1.23E-08	0.95364	CONT-LEAK	*	CSCD300B-PLG-LF	*	FAAC	*	LAMBDA-AUX	*
314					Q11TG	*	SUR-002-L	+				
315	455	6	1.19E-08	0.95399	CONT-LEAK	*	EE-CSCD300A-PLG	*	FR1	*	LAMBDA-SVGR	*
316					Q5TG	*	SUR-002-L	+				
317	709	6	1.15E-08	0.95433	CONT-LEAK	*	EE-CSCD300B-PLG	*	FR1	*	LAMBDA-SVGR	*
318					Q7TG	*	SUR-002-L	+				

319	703	6	1.15E-08	0.95467	CONT-LEAK	*	EE-C2DG01F-PLG	*	FR1	*	LAMBDA-SVGR	*
320					Q7TG	*	SUR-002-L	+				
321	1272	8	1.14E-08	0.95501	CONT-LEAK	*	FA11	*	FAS	*	FS2	*
322					LAMBDA-AUX	*	Q12TG	*	RHRB01AA-BOO-CC	*	SUR-002-L	+
323	1268	8	1.14E-08	0.95535	C0DG01P-PMS-CC	*	CONT-LEAK	*	FA11	*	FAS	*
324					FS2	*	LAMBDA-AUX	*	Q12TG	*	SUR-002-L	+
325	1265	8	1.14E-08	0.95569	CONT-LEAK	*	FA11	*	FAS	*	FS2	*
326					LAMBDA-AUX	*	NWVY01CA-FMS-CC	*	Q12TG	*	SUR-002-L	+
327	1070	6	1.13E-08	0.95602	CONT-LEAK	*	FAAC	*	LAMBDA-AUX	*	Q11TG	*
328					RHRC02BB-PMS-LF	*	SUR-002-L	+				
329	1077	6	1.13E-08	0.95635	C2DG01P-PMS-LF	*	CONT-LEAK	*	FAAC	*	LAMBDA-AUX	*
330					Q11TG	*	SUR-002-L	+				
331	328	8	1.06E-08	0.95667	CONT-LEAK	*	FA4	*	FAP	*	FS3	*
332					LAMBDA-AUX	*	Q3TG	*	RHRB01BB-BOO-CC	*	SUR-002-L	+
333	271	8	1.06E-08	0.95698	CONT-LEAK	*	FA4	*	FAP	*	FS3	*
334					LAMBDA-AUX	*	Q3TG	*	SEVY03CB-FMS-CC	*	SUR-002-L	+
335	321	8	1.06E-08	0.95729	C2DG01P-PMS-CC	*	CONT-LEAK	*	FA4	*	FAP	*
336					FS3	*	LAMBDA-AUX	*	Q3TG	*	SUR-002-L	+
337	643	7	1.00E-08	0.95759	/CONT-LEAK	*	FA6	*	FS2	*	LAMBDA-SVGR	*
338					LCSC002A-P-UUM	*	Q6TG	*	SUR-027-R	+		
339	664	8	1.00E-08	0.95789	/CONT-LEAK	*	FA6	*	FS2	*	LAMBDA-SVGR	*
340					Q6TG	*	RHRC02AA-P-UUM	*	SCSF06AA-DENER	*	SUR-027-R	+
341	646	7	1.00E-08	0.95818	/CONT-LEAK	*	FA6	*	FS2	*	LAMBDA-SVGR	*
342					Q6TG	*	RHRC02AA-P-NDUUM	*	SUR-027-R	+		
343	638	7	1.00E-08	0.95848	C0DG01P-P-UUM	*	/CONT-LEAK	*	FA6	*	FS2	*
344					LAMBDA-SVGR	*	Q6TG	*	SUR-027-R	+		
345	582	7	9.78E-09	0.95877	CONT-LEAK	*	FA6	*	FS2	*	LAMBDA-SVGR	*
346					Q6TG	*	RHRF03AA-VOC-LF	*	SUR-002-L	+		
347	609	8	9.78E-09	0.95906	CONT-LEAK	*	FA6	*	FS2	*	LAMBDA-SVGR	*
348					NOFLOW-RHR-A1	*	Q6TG	*	RHRF04AA-VOC-LF	*	SUR-002-L	+
349	608	8	9.78E-09	0.95935	CONT-LEAK	*	FA6	*	FS2	*	LAMBDA-SVGR	*
350					NOFLOW-RHR-A1	*	Q6TG	*	RHR301AX-STR	*	SUR-002-L	+
351	610	7	9.78E-09	0.95964	CONT-LEAK	*	FA6	*	FS2	*	LAMBDA-SVGR	*
352					Q6TG	*	RHRF98AX-XOC-LF	*	SUR-002-L	+		
353	564	7	9.78E-09	0.95993	CONT-LEAK	*	FA6	*	FS2	*	LAMBDA-SVGR	*
354					Q6TG	*	RHRF47AA-VOC-LF	*	SUR-002-L	+		
355	477	6	9.55E-09	0.96021	C0DG01F-PLG-LF	*	CONT-LEAK	*	FR1	*	LAMBDA-SVGR	*
356					Q5TG	*	SUR-002-L	+				
357	679	6	9.26E-09	0.96048	C2DG01F-PLG-LF	*	CONT-LEAK	*	FR1	*	LAMBDA-SVGR	*
358					Q7TG	*	SUR-002-L	+				
359	577	7	8.89E-09	0.96075	C0DG002-CCC-LF	*	CONT-LEAK	*	FA6	*	FS2	*
360					LAMBDA-SVGR	*	Q6TG	*	SUR-002-L	+		
361	583	7	8.89E-09	0.96101	CONT-LEAK	*	FA6	*	FS2	*	LAMBDA-SVGR	*
362					Q6TG	*	RHRF31AX-CCC-LF	*	SUR-002-L	+		
363	483	6	8.89E-09	0.96127	CONT-LEAK	*	FR1	*	LAMBDA-SVGR	*	NWVY01CA-FMS-LF	*
364					Q5TG	*	SUR-002-L	+				

365	1106	6	8.62E-09	0.96153	CONT-LEAK	*	FAAC	*	LAMBDA-AUX	*	Q11TG	*	
366					SEVY03AX-ACX-LFI	*	SUR-002-L	+					
367	720	6	8.62E-09	0.96179	CONT-LEAK	*	FR1	*	LAMBDA-SVGR	*	Q7TG	*	
368					SEVY03CB-FMS-LF	*	SUR-002-L	+					
369	659	7	8.33E-09	0.96203	C0DG01P-PMS-CC	*	/CONT-LEAK	*	FA6	*	FS2	*	
370					LAMBDA-SVGR	*	Q6TG	*	SUR-027-R	+			
371	656	7	8.33E-09	0.96228	/CONT-LEAK	*	FA6	*	FS2	*	LAMBDA-SVGR	*	
372					NWVY01CA-FMS-CC	*	Q6TG	*	SUR-027-R	+			
373	663	7	8.33E-09	0.96253	/CONT-LEAK	*	FA6	*	FS2	*	LAMBDA-SVGR	*	
374					Q6TG	*	RHRB01AA-BOO-CC	*	SUR-027-R	+			
375	497	6	8.23E-09	0.96277	CONT-LEAK	*	FR1	*	LAMBDA-SVGR	*	NWVY01CA-F-UUM	*	
376					Q5TG	*	SUR-002-L	+					
377	473	6	8.23E-09	0.96301	CONT-LEAK	*	CSCF068A-VCC-LF	*	FR1	*	LAMBDA-SVGR	*	
378					Q5TG	*	SUR-002-L	+					
379	486	7	8.23E-09	0.96326	CONT-LEAK	*	FLOW-RHR-A3	*	FR1	*	LAMBDA-SVGR	*	
380					Q5TG	*	RHRF48AA-VOO-LF	*	SUR-002-L	+			
381	459	6	8.23E-09	0.96350	CONT-LEAK	*	FR1	*	LAMBDA-SVGR	*	Q5TG	*	
382					RHRB01AA-BOO-LF	*	SUR-002-L	+					
383	710	6	7.98E-09	0.96374	CONT-LEAK	*	CSCF068B-VCC-LF	*	FR1	*	LAMBDA-SVGR	*	
384					Q7TG	*	SUR-002-L	+					
385	698	6	7.98E-09	0.96397	CONT-LEAK	*	FR1	*	LAMBDA-SVGR	*	Q7TG	*	
386					SEVY03CB-F-UUM	*	SUR-002-L	+					
387	680	7	7.98E-09	0.96421	CONT-LEAK	*	FLOW-RHR-B3	*	FR1	*	LAMBDA-SVGR	*	
388					Q7TG	*	RHRF48BB-VOO-LF	*	SUR-002-L	+			
389	681	6	7.98E-09	0.96445	CONT-LEAK	*	FR1	*	LAMBDA-SVGR	*	Q7TG	*	
390					RHRB01BB-BOO-LF	*	SUR-002-L	+					
391	674	6	7.98E-09	0.96468	2DG1PK18-ROO-LFO	*	CONT-LEAK	*	FR1	*	LAMBDA-SVGR	*	
392					Q7TG	*	SUR-002-L	+					
393	568	7	7.47E-09	0.96491	CCBF068A-BCO-LF	*	CONT-LEAK	*	FA6	*	FS2	*	
394					LAMBDA-SVGR	*	Q6TG	*	SUR-002-L	+			
395	614	7	7.47E-09	0.96513	1EB16211-BCO	*	CONT-LEAK	*	FA6	*	FS2	*	
396					LAMBDA-SVGR	*	Q6TG	*	SUR-002-L	+			
397	571	7	7.47E-09	0.96535	CCB0DG1P-BCO-LF	*	CONT-LEAK	*	FA6	*	FS2	*	
398					LAMBDA-SVGR	*	Q6TG	*	SUR-002-L	+			
399	1088	7	7.39E-09	0.96557	1EDC2DEP-FROP-4	*	CONT-LEAK	*	EE-CSCD300B-PLG	*	FAAC	*	
400					LAMBDA-AUX	*	Q11TG	*	SUR-002-L	+			
401	1075	7	7.39E-09	0.96579	1EDC2DEP-FROP-4	*	CONT-LEAK	*	EE-C2DG01F-PLG	*	FAAC	*	
402					LAMBDA-AUX	*	Q11TG	*	SUR-002-L	+			
403	443	9	7.25E-09	0.96600	FA5	*	FAT	*	FS2	*	LAMBDA-AUX	*	
404					NOFLOW-RHR-B1	*	/OPFAIL-VENT-2H	*	Q4TG	*	RHR301BX-STR	*	
405					SUR-007-V	+							
406	857	7	7.00E-09	0.96621	C2DG01P-P-UUM	*	/CONT-LEAK	*	FA7	*	FS2	*	
407					LAMBDA-SVGR	*	Q8TG	*	SUR-027-R	+			
408	888	7	7.00E-09	0.96642	/CONT-LEAK	*	FA7	*	FS2	*	LAMBDA-SVGR	*	
409					Q8TG	*	RHRC02BB-P-NDUUM	*	SUR-027-R	+			
410	864	7	7.00E-09	0.96662	/CONT-LEAK	*	FA7	*	FS2	*	LAMBDA-SVGR	*	
411					Q8TG	*	RHRC003B-P-UUM	*	SUR-027-R	+			

412	865	8	7.00E-09	0.96683	/CONT-LEAK	*	FA7	*	FS2	*	LAMBDA-SVGR	*	
413					Q8TG	*	RHRC02BB-P-UUM	*	SCSF06BB-DENER	*	SUR-027-R	+	
414	803	7	6.85E-09	0.96703	CONT-LEAK	*	FA7	*	FS2	*	LAMBDA-SVGR	*	
415					Q8TG	*	RHRF47BB-VOC-LF	*	SUR-002-L	+			
416	836	8	6.85E-09	0.96724	CONT-LEAK	*	FA7	*	FS2	*	LAMBDA-SVGR	*	
417					NOFLOW-RHR-B1	*	Q8TG	*	RHR301BX-STR	*	SUR-002-L	+	
418	842	8	6.85E-09	0.96744	CONT-LEAK	*	FA7	*	FS2	*	LAMBDA-SVGR	*	
419					NOFLOW-RHR-B1	*	Q8TG	*	RHRF04BB-VOC-LF	*	SUR-002-L	+	
420	802	7	6.85E-09	0.96764	CONT-LEAK	*	FA7	*	FS2	*	LAMBDA-SVGR	*	
421					Q8TG	*	RHRF98BX-XOC-LF	*	SUR-002-L	+			
422	837	7	6.85E-09	0.96784	CONT-LEAK	*	FA7	*	FS2	*	LAMBDA-SVGR	*	
423					Q8TG	*	RHRF03BB-VOC-LF	*	SUR-002-L	+			
424	199	8	6.79E-09	0.96805	CONT-LEAK	*	CSCD300B-PLG-LF	*	FA3	*	FAP	*	
425					FS2	*	LAMBDA-AUX	*	Q3TG	*	SUR-002-L	+	
426	604	8	6.67E-09	0.96824	CONT-LEAK	*	FA6	*	FS2	*	LAMBDA-SVGR	*	
427					LPCI-MOV-BETA	*	LPCI-MOV-CM1	*	Q6TG	*	SUR-002-L	+	
428	605	8	6.67E-09	0.96844	CONT-LEAK	*	FA6	*	FS2	*	LAMBDA-SVGR	*	
429					LPCI-MOV-BETA	*	LPCI-MOV-CM2	*	Q6TG	*	SUR-002-L	+	
430	391	8	6.56E-09	0.96863	1EB36YB-BCO-LF	*	CONT-LEAK	*	FA5	*	FAT	*	
431					FS2	*	LAMBDA-AUX	*	Q4TG	*	SUR-002-L	+	
432	392	8	6.56E-09	0.96883	1EB236B-BCO-LF	*	CONT-LEAK	*	FA5	*	FAT	*	
433					FS2	*	LAMBDA-AUX	*	Q4TG	*	SUR-002-L	+	
434	12	6	6.55E-09	0.96902	FA1	*	FAE	*	FS1	*	HCSC001C-PMS-LF	*	
435					LAMBDA-TB	*	Q1TG	+					
436	5	6	6.55E-09	0.96922	CSCC002-PMS-LF	*	FA1	*	FAE	*	FS1	*	
437					LAMBDA-TB	*	Q1TG	+					
438	592	7	6.40E-09	0.96941	1EB211YX-BCO-LF	*	CONT-LEAK	*	FA6	*	FS2	*	
439					LAMBDA-SVGR	*	Q6TG	*	SUR-002-L	+			
440	580	7	6.40E-09	0.96960	1EB1Y22X-BCO	*	CONT-LEAK	*	FA6	*	FS2	*	
441					LAMBDA-SVGR	*	Q6TG	*	SUR-002-L	+			
442	558	7	6.40E-09	0.96979	1EB235XA-BCO-LF	*	CONT-LEAK	*	FA6	*	FS2	*	
443					LAMBDA-SVGR	*	Q6TG	*	SUR-002-L	+			
444	594	7	6.40E-09	0.96998	1EB235YA-BCO-LF	*	CONT-LEAK	*	FA6	*	FS2	*	
445					LAMBDA-SVGR	*	Q6TG	*	SUR-002-L	+			
446	613	7	6.40E-09	0.97017	1EB35Y2X-BCO-LF	*	CONT-LEAK	*	FA6	*	FS2	*	
447					LAMBDA-SVGR	*	Q6TG	*	SUR-002-L	+			
448	601	7	6.40E-09	0.97035	CONT-LEAK	*	FA6	*	FS2	*	LAMBDA-SVGR	*	
449					NWVB001X-BCO-LF	*	Q6TG	*	SUR-002-L	+			
450	596	7	6.40E-09	0.97054	1EB235A-BCO-LF	*	CONT-LEAK	*	FA6	*	FS2	*	
451					LAMBDA-SVGR	*	Q6TG	*	SUR-002-L	+			
452	838	7	6.22E-09	0.97073	C2DGF002-CCC-LF	*	CONT-LEAK	*	FA7	*	FS2	*	
453					LAMBDA-SVGR	*	Q8TG	*	SUR-002-L	+			
454	845	7	6.22E-09	0.97091	CONT-LEAK	*	FA7	*	FS2	*	LAMBDA-SVGR	*	
455					Q8TG	*	RHRF31BX-CCC-LF	*	SUR-002-L	+			
456	203	8	6.22E-09	0.97110	C2DG01P-PMS-LF	*	CONT-LEAK	*	FA3	*	FAP	*	
457					FS2	*	LAMBDA-AUX	*	Q3TG	*	SUR-002-L	+	

458	192	8	6.22E-09	0.97128	CONT-LEAK	*	FA3	*	FAP	*	FS2	*
459					LAMBDA-AUX	*	Q3TG	*	RHRC02BB-PMS-LF	*	SUR-002-L	+
460	46	8	6.09E-09	0.97146	C0DG01P-P-UUM	*	CONT-LEAK	*	FA2	*	FS2	*
461					LAMBDA-CSR	*	Q2TG	*	QWS	*	SUR-002-L	+
462	61	9	6.09E-09	0.97164	CONT-LEAK	*	FA2	*	FS2	*	LAMBDA-CSR	*
463					Q2TG	*	QWS	*	RHRC02AA-P-UUM	*	SCSF06AA-DENER	*
464					SUR-002-L	+						
465	91	8	6.09E-09	0.97182	CONT-LEAK	*	FA2	*	FS2	*	LAMBDA-CSR	*
466					LCSC002A-P-UUM	*	Q2TG	*	QWS	*	SUR-002-L	+
467	39	8	6.09E-09	0.97200	CONT-LEAK	*	FA2	*	FS2	*	LAMBDA-CSR	*
468					Q2TG	*	QWS	*	RHRC02AA-P-NDUUM	*	SUR-002-L	+
469	1123	6	5.95E-09	0.97218	C2DG01F-PLG-LF	*	CONT-LEAK	*	FAAC	*	LAMBDA-AUX	*
470					Q11TG	*	SUR-002-L	+				
471	893	7	5.84E-09	0.97235	/CONT-LEAK	*	FA7	*	FS2	*	LAMBDA-SVGR	*
472					Q8TG	*	RHRB01BB-BOO-CC	*	SUR-027-R	+		
473	852	7	5.84E-09	0.97253	/CONT-LEAK	*	FA7	*	FS2	*	LAMBDA-SVGR	*
474					Q8TG	*	SEVY03CB-FMS-CC	*	SUR-027-R	+		
475	901	7	5.84E-09	0.97270	C2DG01P-PMS-CC	*	/CONT-LEAK	*	FA7	*	FS2	*
476					LAMBDA-SVGR	*	Q8TG	*	SUR-027-R	+		
477	1109	6	5.54E-09	0.97286	CONT-LEAK	*	FAAC	*	LAMBDA-AUX	*	Q11TG	*
478					SEVY03CB-FMS-LF	*	SUR-002-L	+				
479	1278	8	5.48E-09	0.97303	CONT-LEAK	*	CSCD300A-PLG-LF	*	FA11	*	FAS	*
480					FS2	*	LAMBDA-AUX	*	Q12TG	*	SUR-002-L	+
481	810	7	5.23E-09	0.97318	1EB16212-BCO	*	CONT-LEAK	*	FA7	*	FS2	*
482					LAMBDA-SVGR	*	Q8TG	*	SUR-002-L	+		
483	795	7	5.23E-09	0.97334	CCB2DG1P-BCO-LF	*	CONT-LEAK	*	FA7	*	FS2	*
484					LAMBDA-SVGR	*	Q8TG	*	SUR-002-L	+		
485	846	7	5.23E-09	0.97349	CONT-LEAK	*	CSCB068X-BCO-LF	*	FA7	*	FS2	*
486					LAMBDA-SVGR	*	Q8TG	*	SUR-002-L	+		
487	1094	6	5.13E-09	0.97364	CONT-LEAK	*	FAAC	*	LAMBDA-AUX	*	Q11TG	*
488					RHRB01BB-BOO-LF	*	SUR-002-L	+				
489	1096	6	5.13E-09	0.97379	CONT-LEAK	*	CSCF068B-VCC-LF	*	FAAC	*	LAMBDA-AUX	*
490					Q11TG	*	SUR-002-L	+				
491	1084	6	5.13E-09	0.97395	2DG1PK18-ROO-LFO	*	CONT-LEAK	*	FAAC	*	LAMBDA-AUX	*
492					Q11TG	*	SUR-002-L	+				
493	1108	6	5.13E-09	0.97410	CONT-LEAK	*	FAAC	*	LAMBDA-AUX	*	Q11TG	*
494					SEVY03CB-F-UUM	*	SUR-002-L	+				
495	1076	7	5.13E-09	0.97425	CONT-LEAK	*	FAAC	*	FLOW-RHR-B3	*	LAMBDA-AUX	*
496					Q11TG	*	RHRF48BB-VOO-LF	*	SUR-002-L	+		
497	63	8	5.08E-09	0.97440	C0DG01P-PMS-CC	*	CONT-LEAK	*	FA2	*	FS2	*
498					LAMBDA-CSR	*	Q2TG	*	QWS	*	SUR-002-L	+
499	55	8	5.08E-09	0.97455	CONT-LEAK	*	FA2	*	FS2	*	LAMBDA-CSR	*
500					NWVY01CA-FMS-CC	*	Q2TG	*	QWS	*	SUR-002-L	+
501	54	8	5.08E-09	0.97470	CONT-LEAK	*	FA2	*	FS2	*	LAMBDA-CSR	*
502					Q2TG	*	QWS	*	RHRB01AA-BOO-CC	*	SUR-002-L	+
503	319	8	5.07E-09	0.97485	CONT-LEAK	*	CSCD300B-PLG-LF	*	FA4	*	FAP	*
504					FS3	*	LAMBDA-AUX	*	Q3TG	*	SUR-002-L	+

505	1229	8	5.02E-09	0.97500	CONT-LEAK	*	FA11	*	FAS	*	FS2	*
506					LAMBDA-AUX	*	Q12TG	*	RHRC02AA-PMS-LF	*	SUR-002-L	+
507	1245	8	5.02E-09	0.97515	C0DG01P-PMS-LF	*	CONT-LEAK	*	FA11	*	FAS	*
508					FS2	*	LAMBDA-AUX	*	Q12TG	*	SUR-002-L	+
509	18	6	5.00E-09	0.97530	FA1	*	FAE	*	FS1	*	LAMBDA-TB	*
510					Q1TG	*	SWVY02AX-ACX-LFI	+				
511	484	6	4.94E-09	0.97544	CONT-LEAK	*	CSCF008A-V-UUM	*	FR1	*	LAMBDA-SVGR	*
512					Q5TG	*	SUR-002-L	+				
513	451	6	4.94E-09	0.97559	CONT-LEAK	*	FR1	*	LAMBDA-SVGR	*	Q5TG	*
514					RHRF60AA-S-UUM	*	SUR-002-L	+				
515	452	6	4.94E-09	0.97574	C0DG01F-S-UUM	*	CONT-LEAK	*	FR1	*	LAMBDA-SVGR	*
516					Q5TG	*	SUR-002-L	+				
517	476	6	4.94E-09	0.97588	CONT-LEAK	*	CSCD300A-S-UUM	*	FR1	*	LAMBDA-SVGR	*
518					Q5TG	*	SUR-002-L	+				
519	464	6	4.94E-09	0.97603	CONT-LEAK	*	FR1	*	LAMBDA-SVGR	*	NWVY01AX-A-UUM	*
520					Q5TG	*	SUR-002-L	+				
521	479	7	4.94E-09	0.97618	CONT-LEAK	*	FLOW-RHR-A3	*	FR1	*	LAMBDA-SVGR	*
522					Q5TG	*	RHRF48AA-V-UUM	*	SUR-002-L	+		
523	471	6	4.94E-09	0.97632	CONT-LEAK	*	FR1	*	LAMBDA-SVGR	*	Q5TG	*
524					RHRF65AA-N-UUM	*	SUR-002-L	+				
525	447	6	4.94E-09	0.97647	CONT-LEAK	*	FR1	*	LAMBDA-SVGR	*	PC02AAAX-AOO-LFO	*
526					Q5TG	*	SUR-002-L	+				
527	460	6	4.94E-09	0.97661	CONT-LEAK	*	FR1	*	LAMBDA-SVGR	*	Q5TG	*
528					RHRF55AX-R-UUM	*	SUR-002-L	+				
529	470	6	4.94E-09	0.97676	CONT-LEAK	*	FR1	*	LAMBDA-SVGR	*	Q5TG	*
530					RHRF74AA-V-UUM	*	SUR-002-L	+				
531	456	6	4.94E-09	0.97691	CONT-LEAK	*	FR1	*	LAMBDA-SVGR	*	Q5TG	*
532					SCSF06AA-V-UUM	*	SUR-002-L	+				
533	462	7	4.94E-09	0.97705	CONT-LEAK	*	FR1	*	LAMBDA-SVGR	*	Q5TG	*
534					RHRF47AA-V-UUM	*	SCSF06AA-DENER	*	SUR-002-L	+		
535	445	6	4.94E-09	0.97720	CONT-LEAK	*	FR1	*	LAMBDA-SVGR	*	Q5TG	*
536					RHRF87AA-V-UUM	*	SUR-002-L	+				
537	458	6	4.94E-09	0.97735	CONT-LEAK	*	FR1	*	LAMBDA-SVGR	*	Q5TG	*
538					RHRH01AX-H-UUM	*	SUR-002-L	+				
539	448	7	4.94E-09	0.97749	CONT-LEAK	*	FR1	*	LAMBDA-SVGR	*	Q5TG	*
540					RHRF88AX-R-UUM	*	SCSF06AA-DENER	*	SUR-002-L	+		
541	474	7	4.94E-09	0.97764	CONT-LEAK	*	FR1	*	LAMBDA-SVGR	*	Q5TG	*
542					RHRF64AA-V-UUM	*	SCSF06AA-DENER	*	SUR-002-L	+		
543	481	6	4.94E-09	0.97779	CONT-LEAK	*	FR1	*	LAMBDA-SVGR	*	Q5TG	*
544					RHRF51AA-N-UUM	*	SUR-002-L	+				
545	723	6	4.79E-09	0.97793	2DG01PSC-OOO-LFO	*	CONT-LEAK	*	FR1	*	LAMBDA-SVGR	*
546					Q7TG	*	SUR-002-L	+				
547	701	7	4.79E-09	0.97807	CONT-LEAK	*	FLOW-RHR-B3	*	FR1	*	LAMBDA-SVGR	*
548					Q7TG	*	RHRF48BB-V-UUM	*	SUR-002-L	+		
549	692	6	4.79E-09	0.97821	CONT-LEAK	*	FR1	*	LAMBDA-SVGR	*	Q7TG	*
550					RHRF87BB-V-UUM	*	SUR-002-L	+				

551	705	6	4.79E-09	0.97835	C2DG01F-S-UUM	*	CONT-LEAK	*	FR1	*	LAMBDA-SVGR	*
552					Q7TG	*	SUR-002-L	+				
553	700	6	4.79E-09	0.97849	CONT-LEAK	*	CSCD300B-S-UUM	*	FR1	*	LAMBDA-SVGR	*
554					Q7TG	*	SUR-002-L	+				
555	712	6	4.79E-09	0.97864	2DG01PK18CA-LFOO	*	CONT-LEAK	*	FR1	*	LAMBDA-SVGR	*
556					Q7TG	*	SUR-002-L	+				
557	693	6	4.79E-09	0.97878	CONT-LEAK	*	FR1	*	LAMBDA-SVGR	*	Q7TG	*
558					RHRF55BX-R-UUM	*	SUR-002-L	+				
559	694	6	4.79E-09	0.97892	CONT-LEAK	*	FR1	*	LAMBDA-SVGR	*	Q7TG	*
560					SEVY03AX-A-UUM	*	SUR-002-L	+				
561	688	6	4.79E-09	0.97906	CONT-LEAK	*	CSCF068B-V-UUM	*	FR1	*	LAMBDA-SVGR	*
562					Q7TG	*	SUR-002-L	+				
563	696	7	4.79E-09	0.97920	CONT-LEAK	*	FR1	*	LAMBDA-SVGR	*	Q7TG	*
564					RHRF47BB-V-UUM	*	SCSF06BB-DENER	*	SUR-002-L	+		
565	714	6	4.79E-09	0.97935	CONT-LEAK	*	FR1	*	LAMBDA-SVGR	*	Q7TG	*
566					RHRF51BB-N-UUM	*	SUR-002-L	+				
567	711	7	4.79E-09	0.97949	CONT-LEAK	*	FR1	*	LAMBDA-SVGR	*	Q7TG	*
568					RHRF64BB-V-UUM	*	SCSF06BB-DENER	*	SUR-002-L	+		
569	707	6	4.79E-09	0.97963	CONT-LEAK	*	FR1	*	LAMBDA-SVGR	*	Q7TG	*
570					RHRF60BB-S-UUM	*	SUR-002-L	+				
571	704	6	4.79E-09	0.97977	CONT-LEAK	*	FR1	*	LAMBDA-SVGR	*	Q7TG	*
572					RHRF74BB-V-UUM	*	SUR-002-L	+				
573	687	6	4.79E-09	0.97991	CONT-LEAK	*	FR1	*	LAMBDA-SVGR	*	Q7TG	*
574					RHRF65BB-N-UUM	*	SUR-002-L	+				
575	686	6	4.79E-09	0.98005	CONT-LEAK	*	FR1	*	LAMBDA-SVGR	*	Q7TG	*
576					SCSF06BB-V-UUM	*	SUR-002-L	+				
577	678	6	4.79E-09	0.98020	CONT-LEAK	*	FR1	*	LAMBDA-SVGR	*	Q7TG	*
578					RHRH01BX-H-UUM	*	SUR-002-L	+				
579	697	7	4.79E-09	0.98034	CONT-LEAK	*	FR1	*	LAMBDA-SVGR	*	Q7TG	*
580					RHRF88BX-R-UUM	*	SCSF06BB-DENER	*	SUR-002-L	+		
581	163	8	4.75E-09	0.98048	CONT-LEAK	*	FA3	*	FAP	*	FS2	*
582					LAMBDA-AUX	*	Q3TG	*	SEVY03AX-ACX-LFI	*	SUR-002-L	+
583	848	8	4.67E-09	0.98062	CONT-LEAK	*	FA7	*	FS2	*	LAMBDA-SVGR	*
584					LPCI-MOV-BETA	*	LPCI-MOV-CM1	*	Q8TG	*	SUR-002-L	+
585	849	8	4.67E-09	0.98076	CONT-LEAK	*	FA7	*	FS2	*	LAMBDA-SVGR	*
586					LPCI-MOV-BETA	*	LPCI-MOV-CM2	*	Q8TG	*	SUR-002-L	+
587	312	8	4.65E-09	0.98089	CONT-LEAK	*	FA4	*	FAP	*	FS3	*
588					LAMBDA-AUX	*	Q3TG	*	RHRC02BB-PMS-LF	*	SUR-002-L	+
589	323	8	4.65E-09	0.98103	C2DG01P-PMS-LF	*	CONT-LEAK	*	FA4	*	FAP	*
590					FS3	*	LAMBDA-AUX	*	Q3TG	*	SUR-002-L	+
591	489	7	4.53E-09	0.98117	CONT-LEAK	*	FR1	*	LAMBDA-SVGR	*	LPCI-BETA	*
592					LPCI-PMS-CM	*	Q5TG	*	SUR-002-L	+		
593	923	8	4.50E-09	0.98130	CONT-LEAK	*	FA8	*	FAZ	*	FS2	*
594					LAMBDA-AUX	*	Q9TG	*	RHRH01BX-HTX-LFB	*	SUR-002-L	+
595	851	7	4.48E-09	0.98143	1EP 2YX-BCO-LF	*	CONT-LEAK	*	FA7	*	FS2	*
596					LAMBDA-SVGR	*	Q8TG	*	SUR-002-L	+		

597	839	7	4.48E-09	0.98156	1EB36YB-BCO-LF	*	CONT-LEAK	*	FA7	*	FS2	*
598					LAMBDA-SVGR	*	Q8TG	*	SUR-002-L	+		
599	826	7	4.48E-09	0.98170	1EB36XB-BCO-LF	*	CONT-LEAK	*	FA7	*	FS2	*
600					LAMBDA-SVGR	*	Q8TG	*	SUR-002-L	+		
601	811	7	4.48E-09	0.98183	1EB36Y1X-BCO-LF	*	CONT-LEAK	*	FA7	*	FS2	*
602					LAMBDA-SVGR	*	Q8TG	*	SUR-002-L	+		
603	793	7	4.48E-09	0.98196	1EB2Y22X-BCO	*	CONT-LEAK	*	FA7	*	FS2	*
604					LAMBDA-SVGR	*	Q8TG	*	SUR-002-L	+		
605	822	7	4.48E-09	0.98210	1EB236B-BCO-LF	*	CONT-LEAK	*	FA7	*	FS2	*
606					LAMBDA-SVGR	*	Q8TG	*	SUR-002-L	+		
607	796	7	4.48E-09	0.98223	CONT-LEAK	*	FA7	*	FS2	*	LAMBDA-SVGR	*
608					Q8TG	*	SEVB001X-BCO-LF	*	SUR-002-L	+		
609	727	7	4.39E-09	0.98236	CONT-LEAK	*	FR1	*	LAMBDA-SVGR	*	LPCI-BETA	*
610					LPCI-PMS-CM	*	Q7TG	*	SUR-002-L	+		
611	8	6	4.29E-09	0.98249	EE-CSCD300-PLG	*	FA1	*	FAE	*	FS1	*
612					LAMBDA-TB	*	Q1TG	+				
613	205	9	4.07E-09	0.98261	1EDC2DEP-FROP-4	*	CONT-LEAK	*	EE-C2DG01F-PLG	*	FA3	*
614					FAP	*	FS2	*	LAMBDA-AUX	*	Q3TG	*
615					SUR-002-L	+						
616	184	9	4.07E-09	0.98273	1EDC2DEP-FROP-4	*	CONT-LEAK	*	EE-CSCD300B-PLG	*	FA3	*
617					FAP	*	FS2	*	LAMBDA-AUX	*	Q3TG	*
618					SUR-002-L	+						
619	669	7	4.00E-09	0.98285	/CONT-LEAK	*	CSCD300A-PLG-LF	*	FA6	*	FS2	*
620					LAMBDA-SVGR	*	Q6TG	*	SUR-027-R	+		
621	1226	8	3.83E-09	0.98296	CONT-LEAK	*	FA11	*	FAS	*	FS2	*
622					LAMBDA-AUX	*	NWVY01AX-ACX-LFI	*	Q12TG	*	SUR-002-L	+
623	518	6	3.83E-09	0.98307	/CONT-LEAK	*	FR1	*	LAMBDA-SVGR	*	Q5TG	*
624					RHRH01AX-HTX-LFB	*	SUR-027-R	+				
625	775	6	3.71E-09	0.98318	/CONT-LEAK	*	FR1	*	LAMBDA-SVGR	*	Q7TG	*
626					RHRH01BX-HTX-LFB	*	SUR-027-R	+				
627	636	7	3.67E-09	0.98329	C0DG01P-PMS-LF	*	/CONT-LEAK	*	FA6	*	FS2	*
628					LAMBDA-SVGR	*	Q6TG	*	SUR-027-R	+		
629	620	7	3.67E-09	0.98340	/CONT-LEAK	*	FA6	*	FS2	*	LAMBDA-SVGR	*
630					Q6TG	*	RHRC02AA-PMS-LF	*	SUR-027-R	+		
631	283	8	3.55E-09	0.98350	CONT-LEAK	*	FA4	*	FAP	*	FS3	*
632					LAMBDA-AUX	*	Q3TG	*	SEVY03AX-ACX-LFI	*	SUR-002-L	+
633	7	6	3.45E-09	0.98361	CSCD300-PLG-LF	*	FA1	*	FAE	*	FS1	*
634					LAMBDA-TB	*	Q1TG	+				
635	1235	8	3.29E-09	0.98370	CONT-LEAK	*	EE-CSCD300A-PLG	*	FA11	*	FAS	*
636					FS2	*	LAMBDA-AUX	*	Q12TG	*	SUR-002-L	+
637	164	8	3.28E-09	0.98380	C2DG01F-PLG-LF	*	CONT-LEAK	*	FA3	*	FAP	*
638					FS2	*	LAMBDA-AUX	*	Q3TG	*	SUR-002-L	+
639	20	6	3.21E-09	0.98390	FA1	*	FAE	*	FS1	*	LAMBDA-TB	*
640					Q1TG	*	SWVY02CC-FMS-LF	+				
641	1087	6	3.08E-09	0.98399	CONT-LEAK	*	CSCF068B-V-UUM	*	FAAC	*	LAMBDA-AUX	*
642					Q11TG	*	SUR-002-L	+				

643	1124	6	3.08E-09	0.98408	CONT-LEAK	*	FAAC	*	LAMBDA-AUX	*	Q11TG	*
644					*RHRF87BB-V-UUM*	*	*SUR-002-L*	+				
645	1085	7	3.08E-09	0.98417	CONT-LEAK	*	FAAC	*	LAMBDA-AUX	*	Q11TG	*
646					RHRF88BX-R-UUM	*	SCSF06BB-DENER	*	SUR-002-L	+		
647	1068	6	3.08E-09	0.98426	2DG01PK18CA-LFOO	*	CONT-LEAK	*	FAAC	*	LAMBDA-AUX	*
648					Q11TG	*	SUR-002-L	+				
649	1097	6	3.08E-09	0.98435	CONT-LEAK	*	FAAC	*	LAMBDA-AUX	*	Q11TG	*
650					RHRF51BB-N-UUM	*	SUR-002-L	+				
651	1098	6	3.08E-09	0.98444	CONT-LEAK	*	FAAC	*	LAMBDA-AUX	*	Q11TG	*
652					RHRF60BB-S-UUM	*	SUR-002-L	+				
653	1116	7	3.08E-09	0.98454	CONT-LEAK	*	FAAC	*	LAMBDA-AUX	*	Q11TG	*
654					RHRF47BB-V-UUM	*	SCSF06BB-DENER	*	SUR-002-L	+		
655	1073	6	3.08E-09	0.98463	CONT-LEAK	*	FAAC	*	LAMBDA-AUX	*	Q11TG	*
656					RHRH01BX-H-UUM	*	SUR-002-L	+				
657	1095	7	3.08E-09	0.98472	CONT-LEAK	*	FAAC	*	FLOW-RHR-B3	*	LAMBDA-AUX	*
658					Q11TG	*	RHRF48BB-V-UUM	*	SUR-002-L	+		
659	1089	6	3.08E-09	0.98481	CONT-LEAK	*	FAAC	*	LAMBDA-AUX	*	Q11TG	*
660					SCSF06BB-V-UUM	*	SUR-002-L	+				
661	1069	6	3.08E-09	0.98490	CONT-LEAK	*	FAAC	*	LAMBDA-AUX	*	Q11TG	*
662					RHRF55BX-R-UUM	*	SUR-002-L	+				
663	1092	6	3.08E-09	0.98499	C2DG01F-S-UUM	*	CONT-LEAK	*	FAAC	*	LAMBDA-AUX	*
664					Q11TG	*	SUR-002-L	+				
665	1091	6	3.08E-09	0.98508	2DG01PSC-OOO-LFO	*	CONT-LEAK	*	FAAC	*	LAMBDA-AUX	*
666					Q11TG	*	SUR-002-L	+				
667	1110	6	3.08E-09	0.98517	CONT-LEAK	*	FAAC	*	LAMBDA-AUX	*	Q11TG	*
668					SEVY03AX-A-UUM	*	SUR-002-L	+				
669	1103	7	3.08E-09	0.98527	CONT-LEAK	*	FAAC	*	LAMBDA-AUX	*	Q11TG	*
670					RHRF64BB-V-UUM	*	SCSF06BB-DENER	*	SUR-002-L	+		
671	1082	6	3.08E-09	0.98536	CONT-LEAK	*	FAAC	*	LAMBDA-AUX	*	Q11TG	*
672					RHRF74BB-V-UUM	*	SUR-002-L	+				
673	1079	6	3.08E-09	0.98545	CONT-LEAK	*	CSCD300B-S-UUM	*	FAAC	*	LAMBDA-AUX	*
674					Q11TG	*	SUR-002-L	+				
675	1071	6	3.08E-09	0.98554	CONT-LEAK	*	FAAC	*	LAMBDA-AUX	*	Q11TG	*
676					RHRF65BB-N-UUM	*	SUR-002-L	+				
677	178	8	3.05E-09	0.98563	CONT-LEAK	*	FA3	*	FAP	*	FS2	*
678					LAMBDA-AUX	*	Q3TG	*	SEVY03CB-FMS-LF	*	SUR-002-L	+
679	325	9	3.04E-09	0.98572	1EDC2DEP-FROP-4	*	CONT-LEAK	*	EE-C2DG01F-PLG	*	FA4	*
680					FAP	*	FS3	*	LAMBDA-AUX	*	Q3TG	*
681					SUR-002-L	+						
682	304	9	3.04E-09	0.98581	1EDC2DEP-FROP-4	*	CONT-LEAK	*	EE-CSCD300B-PLG	*	FA4	*
683					FAP	*	FS3	*	LAMBDA-AUX	*	Q3TG	*
684					SUR-002-L	+						
685	15	6	2.98E-09	0.98590	FA1	*	FAE	*	FS1	*	HCSF004C-VCC-LF	*
686					LAMBDA-TB	*	Q1TG	+				
687	21	6	2.98E-09	0.98599	FA1	*	FAE	*	FS1	*	LAMBDA-TB	*
688					Q1TG	*	SWVY02CC-F-UUM	+				

689	16	7	2.98E-09	0.98607	EE-CST-LVL	*	FA1	*	FAE	*	FS1	*
690					HCSF015C-VCC-LF	*	LAMBDA-TB	*	Q1TG	+		
691	156	8	2.83E-09	0.98616	2DG1PK18-ROO-LFO	*	CONT-LEAK	*	FA3	*	FAP	*
692					FS2	*	LAMBDA-AUX	*	Q3TG	*	SUR-002-L	+
693	202	8	2.83E-09	0.98624	CONT-LEAK	*	FA3	*	FAP	*	FS2	*
694					LAMBDA-AUX	*	Q3TG	*	SEVY03CB-F-UUM	*	SUR-002-L	+
695	197	8	2.83E-09	0.98633	CONT-LEAK	*	CSCF068B-VCC-LF	*	FA3	*	FAP	*
696					FS2	*	LAMBDA-AUX	*	Q3TG	*	SUR-002-L	+
697	162	9	2.83E-09	0.98641	CONT-LEAK	*	FA3	*	FAP	*	FLOW-RHR-B3	*
698					FS2	*	LAMBDA-AUX	*	Q3TG	*	RHRF48BB-VOO-LF	*
699					SUR-002-L	+						
700	161	8	2.83E-09	0.98649	CONT-LEAK	*	FA3	*	FAP	*	FS2	*
701					LAMBDA-AUX	*	Q3TG	*	RHRB01BB-BOO-LF	*	SUR-002-L	+
702	1113	7	2.82E-09	0.98658	CONT-LEAK	*	FAAC	*	LAMBDA-AUX	*	LPCI-BETA	*
703					LPCI-PMS-CM	*	Q11TG	*	SUR-002-L	+		
704	910	7	2.80E-09	0.98666	/CONT-LEAK	*	CSCD300B-PLG-LF	*	FA7	*	FS2	*
705					LAMBDA-SVGR	*	Q8TG	*	SUR-027-R	+		
706	617	7	2.80E-09	0.98674	/CONT-LEAK	*	FA6	*	FS2	*	LAMBDA-SVGR	*
707					NWVY01AX-ACX-LFI	*	Q6TG	*	SUR-027-R	+		
708	1257	8	2.65E-09	0.98682	C0DG01F-PLG-LF	*	CONT-LEAK	*	FA11	*	FAS	*
709					FS2	*	LAMBDA-AUX	*	Q12TG	*	SUR-002-L	+
710	904	7	2.57E-09	0.98690	C2DG01P-PMS-LF	*	/CONT-LEAK	*	FA7	*	FS2	*
711					LAMBDA-SVGR	*	Q8TG	*	SUR-027-R	+		
712	869	7	2.57E-09	0.98697	/CONT-LEAK	*	FA7	*	FS2	*	LAMBDA-SVGR	*
713					Q8TG	*	RHRC02BB-PMS-LF	*	SUR-027-R	+		
714	1263	8	2.46E-09	0.98705	CONT-LEAK	*	FA11	*	FAS	*	FS2	*
715					LAMBDA-AUX	*	NWVY01CA-FMS-LF	*	Q12TG	*	SUR-002-L	+
716	284	8	2.45E-09	0.98712	C2DG01F-PLG-LF	*	CONT-LEAK	*	FA4	*	FAP	*
717					FS3	*	LAMBDA-AUX	*	Q3TG	*	SUR-002-L	+
718	92	8	2.44E-09	0.98719	CONT-LEAK	*	CSCD300A-PLG-LF	*	FA2	*	FS2	*
719					LAMBDA-CSR	*	Q2TG	*	QWS	*	SUR-002-L	+
720	626	7	2.40E-09	0.98726	/CONT-LEAK	*	EE-CSCD300A-PLG	*	FA6	*	FS2	*
721					LAMBDA-SVGR	*	Q6TG	*	SUR-027-R	+		
722	1134	6	2.39E-09	0.98733	/CONT-LEAK	*	FAAC	*	LAMBDA-AUX	*	Q11TG	*
723					RHRH01BX-HTX-LFB	*	SUR-027-R	+				
724	1266	9	2.28E-09	0.98740	CONT-LEAK	*	FA11	*	FAS	*	FLOW-RHR-A3	*
725					FS2	*	LAMBDA-AUX	*	Q12TG	*	RHRF48AA-VOO-LF	*
726					SUR-002-L	+						
727	1253	8	2.28E-09	0.98747	CONT-LEAK	*	CSCF068A-VCC-LF	*	FA11	*	FAS	*
728					FS2	*	LAMBDA-AUX	*	Q12TG	*	SUR-002-L	+
729	1277	8	2.28E-09	0.98754	CONT-LEAK	*	FA11	*	FAS	*	FS2	*
730					LAMBDA-AUX	*	NWVY01CA-F-UUM	*	Q12TG	*	SUR-002-L	+
731	1239	8	2.28E-09	0.98760	CONT-LEAK	*	FA11	*	FAS	*	FS2	*
732					LAMBDA-AUX	*	Q12TG	*	RHRB01AA-BOO-LF	*	SUR-002-L	+
733	298	8	2.28E-09	0.98767	CONT-LEAK	*	FA4	*	FAP	*	FS3	*
734					LAMBDA-AUX	*	Q3TG	*	SEVY03CB-FMS-LF	*	SUR-002-L	+

735	90	8	2.23E-09	0.98774	C0DG01P-PMS-LF	*	CONT-LEAK	*	FA2	*	FS2	*
736					LAMBDA-CSR	*	Q2TG	*	QWS	*	SUR-002-L	+
737	52	8	2.23E-09	0.98780	CONT-LEAK	*	FA2	*	FS2	*	LAMBDA-CSR	*
738					Q2TG	*	QWS	*	RHRC02AA-PMS-LF	*	SUR-002-L	+
739	942	8	2.18E-09	0.98787	CONT-LEAK	*	FA8	*	FAZ	*	FS2	*
740					LAMBDA-AUX	*	Q9TG	*	RHRC003B-P-UUM	*	SUR-002-L	+
741	968	9	2.18E-09	0.98793	CONT-LEAK	*	FA8	*	FAZ	*	FS2	*
742					LAMBDA-AUX	*	Q9TG	*	RHRC02BB-P-UUM	*	SCSF06BB-DENER	*
743					SUR-002-L	+						
744	917	8	2.18E-09	0.98800	CONT-LEAK	*	FA8	*	FAZ	*	FS2	*
745					LAMBDA-AUX	*	Q9TG	*	RHRC02BB-P-NDUUM	*	SUR-002-L	+
746	965	8	2.18E-09	0.98806	C2DG01P-P-UUM	*	CONT-LEAK	*	FA8	*	FAZ	*
747					FS2	*	LAMBDA-AUX	*	Q9TG	*	SUR-002-L	+
748	567	8	2.13E-09	0.98812	CONT-LEAK	*	FA6	*	FLOW-RHR-A3	*	FS2	*
749					LAMBDA-SVGR	*	Q6TG	*	RHRB03AX-BCO-LF	*	SUR-002-L	+
750	322	8	2.11E-09	0.98819	CONT-LEAK	*	FA4	*	FAP	*	FS3	*
751					LAMBDA-AUX	*	Q3TG	*	SEVY03CB-F-UUM	*	SUR-002-L	+
752	282	9	2.11E-09	0.98825	CONT-LEAK	*	FA4	*	FAP	*	FLOW-RHR-B3	*
753					FS3	*	LAMBDA-AUX	*	Q3TG	*	RHRF48BB-VOO-LF	*
754					SUR-002-L	+						
755	281	8	2.11E-09	0.98831	CONT-LEAK	*	FA4	*	FAP	*	FS3	*
756					LAMBDA-AUX	*	Q3TG	*	RHRB01BB-BOO-LF	*	SUR-002-L	+
757	317	8	2.11E-09	0.98838	CONT-LEAK	*	CSCF068B-VCC-LF	*	FA4	*	FAP	*
758					FS3	*	LAMBDA-AUX	*	Q3TG	*	SUR-002-L	+
759	276	8	2.11E-09	0.98844	2DG1PK18-ROO-LFO	*	CONT-LEAK	*	FA4	*	FAP	*
760					FS3	*	LAMBDA-AUX	*	Q3TG	*	SUR-002-L	+
761	879	7	1.96E-09	0.98850	/CONT-LEAK	*	FA7	*	FS2	*	LAMBDA-SVGR	*
762					Q8TG	*	SEVY03AX-ACX-LFI	*	SUR-027-R	+		
763	648	7	1.93E-09	0.98855	C0DG01F-PLG-LF	*	/CONT-LEAK	*	FA6	*	FS2	*
764					LAMBDA-SVGR	*	Q6TG	*	SUR-027-R	+		
765	532	6	1.85E-09	0.98861	/CONT-LEAK	*	FR1	*	LAMBDA-SVGR	*	Q5TG	*
766					RHRC02AA-P-NDUUM	*	SUR-027-R	+				
767	550	7	1.85E-09	0.98866	/CONT-LEAK	*	FR1	*	LAMBDA-SVGR	*	Q5TG	*
768					RHRC02AA-P-UUM	*	SCSF06AA-DENER	*	SUR-027-R	+		
769	529	6	1.85E-09	0.98872	/CONT-LEAK	*	FR1	*	LAMBDA-SVGR	*	LCSC002A-P-UUM	*
770					Q5TG	*	SUR-027-R	+				
771	524	6	1.85E-09	0.98877	C0DG01P-P-UUM	*	/CONT-LEAK	*	FR1	*	LAMBDA-SVGR	*
772					Q5TG	*	SUR-027-R	+				
773	957	8	1.81E-09	0.98883	CONT-LEAK	*	FA8	*	FAZ	*	FS2	*
774					LAMBDA-AUX	*	Q9TG	*	SEVY03CB-FMS-CC	*	SUR-002-L	+
775	933	8	1.81E-09	0.98888	CONT-LEAK	*	FA8	*	FAZ	*	FS2	*
776					LAMBDA-AUX	*	Q9TG	*	RHRB01BB-BOO-CC	*	SUR-002-L	+
777	922	8	1.81E-09	0.98893	C2DG01P-PMS-CC	*	CONT-LEAK	*	FA8	*	FAZ	*
778					FS2	*	LAMBDA-AUX	*	Q9TG	*	SUR-002-L	+
779	496	6	1.81E-09	0.98899	CONT-LEAK	*	FR1	*	LAMBDA-SVGR	*	Q5TG	*
780					RHRF98AX-XOC-LF	*	SUR-002-L	+				

781	494	7	1.81E-09	0.98904	CONT-LEAK	*	FR1	*	LAMBDA-SVGR	*	NOFLOW-RHR-A1	*
782					Q5TG	*	RHR301AX-STR	*	SUR-002-L	+		
783	450	6	1.81E-09	0.98909	CONT-LEAK	*	FR1	*	LAMBDA-SVGR	*	Q5TG	*
784					RHRF47AA-VOC-LF	*	SUR-002-L	+				
785	468	6	1.81E-09	0.98915	CONT-LEAK	*	FR1	*	LAMBDA-SVGR	*	Q5TG	*
786					RHRF03AA-VOC-LF	*	SUR-002-L	+				
787	495	7	1.81E-09	0.98920	CONT-LEAK	*	FR1	*	LAMBDA-SVGR	*	NOFLOW-RHR-A1	*
788					Q5TG	*	RHRF04AA-VOC-LF	*	SUR-002-L	+		
789	654	7	1.80E-09	0.98926	/CONT-LEAK	*	FA6	*	FS2	*	LAMBDA-SVGR	*
790					NWVY01CA-FMS-LF	*	Q6TG	*	SUR-027-R	+		
791	768	6	1.80E-09	0.98931	/CONT-LEAK	*	FR1	*	LAMBDA-SVGR	*	Q7TG	*
792					RHRC02BB-P-NDUUM	*	SUR-027-R	+				
793	745	7	1.80E-09	0.98936	/CONT-LEAK	*	FR1	*	LAMBDA-SVGR	*	Q7TG	*
794					RHRC02BB-P-UUM	*	SCSF06BB-DENER	*	SUR-027-R	+		
795	744	6	1.80E-09	0.98941	/CONT-LEAK	*	FR1	*	LAMBDA-SVGR	*	Q7TG	*
796					RHRC003B-P-UUM	*	SUR-027-R	+				
797	737	6	1.80E-09	0.98947	C2DG01P-P-UUM	*	/CONT-LEAK	*	FR1	*	LAMBDA-SVGR	*
798					Q7TG	*	SUR-027-R	+				
799	722	7	1.76E-09	0.98952	CONT-LEAK	*	FR1	*	LAMBDA-SVGR	*	NOFLOW-RHR-B1	*
800					Q7TG	*	RHRF04BB-VOC-LF	*	SUR-002-L	+		
801	716	7	1.76E-09	0.98957	CONT-LEAK	*	FR1	*	LAMBDA-SVGR	*	NOFLOW-RHR-B1	*
802					Q7TG	*	RHR301BX-STR	*	SUR-002-L	+		
803	683	6	1.76E-09	0.98962	CONT-LEAK	*	FR1	*	LAMBDA-SVGR	*	Q7TG	*
804					RHRF47BB-VOC-LF	*	SUR-002-L	+				
805	682	6	1.76E-09	0.98968	CONT-LEAK	*	FR1	*	LAMBDA-SVGR	*	Q7TG	*
806					RHRF98BX-XOC-LF	*	SUR-002-L	+				
807	717	6	1.76E-09	0.98973	CONT-LEAK	*	FR1	*	LAMBDA-SVGR	*	Q7TG	*
808					RHRF03BB-VOC-LF	*	SUR-002-L	+				
809	67	8	1.71E-09	0.98978	CONT-LEAK	*	FA2	*	FS2	*	LAMBDA-CSR	*
810					NWVY01AX-ACX-LFI	*	Q2TG	*	QWS	*	SUR-002-L	+
811	157	8	1.70E-09	0.98983	CONT-LEAK	*	FA3	*	FAP	*	FS2	*
812					LAMBDA-AUX	*	Q3TG	*	RHRH01BX-H-UUM	*	SUR-002-L	+
813	194	8	1.70E-09	0.98988	2DG01PSC-OOO-LFO	*	CONT-LEAK	*	FA3	*	FAP	*
814					FS2	*	LAMBDA-AUX	*	Q3TG	*	SUR-002-L	+
815	158	8	1.70E-09	0.98993	CONT-LEAK	*	FA3	*	FAP	*	FS2	*
816					LAMBDA-AUX	*	Q3TG	*	RHRF60BB-S-UUM	*	SUR-002-L	+
817	209	8	1.70E-09	0.98998	CONT-LEAK	*	FA3	*	FAP	*	FS2	*
818					LAMBDA-AUX	*	Q3TG	*	RHRF87BB-V-UUM	*	SUR-002-L	+
819	196	9	1.70E-09	0.99003	CONT-LEAK	*	FA3	*	FAP	*	FS2	*
820					LAMBDA-AUX	*	Q3TG	*	RHRF88BX-R-UUM	*	SCSF06BB-DENER	*
821					SUR-002-L	+						

Output terminated at cut sets contributing 99% of total sequence frequency.

TEMAC RUN TIME IN CPU SECONDS 5860.15

FIRE-AA SEQUENCE

TOP EVENT FIRE-AA CONTAINS 23 EVENTS IN 36 CUT SETS

THE FREQUENCY OF TOP EVENT FIRE-AA IS 6.77E-09

DESCRIPTIVE STATISTICS FOR THE FREQUENCY OF TOP EVENT FIRE-AA

N	400
MEAN	7.31E-09
STD DEV	3.29E-08
LOWER 5%	0.00E+00
LOWER 25%	0.00E+00
MEDIAN	0.00E+00
UPPER 25%	1.28E-09
UPPER 5%	3.59E-08

90% UNCERTAINTY INTERVAL FOR TOP EVENT FREQUENCY (INNERMOST BRACKETS DENOTE INTERQUARTILE RANGE, ASTERISK DENOTES MEDIAN, N DENOTES NOMINAL VALUE AND M DENOTES MEAN)

NOMENCLATURE:

PD = PARTIAL DERIVATIVE

TEF = FREQUENCY OF THE TOP EVENT

EV(J) = PROBABILITY OF EVENT J FOR BASE EVENTS
= FREQUENCY OF EVENT J FOR INITIATING EVENTS

MEASURES:

1. FOR BASE EVENTS AND INITIATING EVENTS:

RISK REDUCTION = PD x EV(J)
= TEF - TEF(EVALUATED WITH EV(J) = 0)

2. FOR BASE EVENTS ONLY:

RISK INCREASE = PD - RISK REDUCTION
= PD x (1 - EV(J))
= TEF(EVALUATED WITH EV(J) = 1) - TEF

FIRE-AA SEQUENCE
RISK REDUCTION BY BASE EVENT (WITH ASSOCIATED UNCERTAINTY INTERVALS)

BASE EVENT	OCCUR	PROB	(RANK)	RISK REDUCTION	(RANK)	LOWER 5%	UPPER 5%
NLOSP	36	1.00E+00	(2.5)	6.77E-09	(3.5)		
FS2	36	3.00E-01	(7.0)	6.77E-09	(3.5)	0.00E+00	3.59E-08
FAAA	36	6.40E-02	(10.0)	6.77E-09	(3.5)	0.00E+00	3.59E-08
Q10TG	36	9.30E-01	(5.0)	6.77E-09	(3.5)	0.00E+00	3.59E-08
FA9	36	8.00E-02	(9.0)	6.77E-09	(3.5)	0.00E+00	3.59E-08
LAMBDA-AUX	36	5.40E-02	(11.0)	6.77E-09	(3.5)	0.00E+00	3.59E-08
SUR-002-L	18	1.60E-01	(8.0)	6.52E-09	(7.0)	0.00E+00	2.92E-08
CONT-LEAK	36	7.50E-01	(6.0)	5.79E-09	(8.0)	0.00E+00	2.92E-08
DG2A-GEN-LF-FTS	18	2.50E-02	(12.0)	3.84E-09	(9.0)	0.00E+00	2.01E-08
DG2A-GEN-LF-FTR	18	1.90E-02	(13.0)	2.92E-09	(10.0)	0.00E+00	1.01E-08
RHRH01AX-HTX-LFB	4	6.20E-03	(15.0)	2.62E-09	(11.0)	0.00E+00	1.14E-08
LCSC002A-P-UUM	4	3.00E-03	(16.5)	1.27E-09	(13.0)	0.00E+00	4.11E-09
SCSF06AA-DENER	4	1.00E+00	(2.5)	1.27E-09	(13.0)		
RHRC02AA-P-UUM	4	3.00E-03	(16.5)	1.27E-09	(13.0)	0.00E+00	4.11E-09
C0DG01P-PMS-LF	4	1.10E-03	(18.5)	4.65E-10	(15.5)	0.00E+00	1.63E-09
RHRC02AA-PMS-LF	4	1.10E-03	(18.5)	4.65E-10	(15.5)	0.00E+00	1.63E-09
SUR-027-R	18	1.80E-02	(14.0)	2.45E-10	(17.0)	0.00E+00	2.83E-09
FLOW-RHR-A3	4	1.00E+00	(2.5)	2.11E-10	(19.5)		
CSCF068A-VCC-LF	4	5.00E-04	(21.0)	2.11E-10	(19.5)	0.00E+00	1.28E-09
RHRF48AA-VOO-LF	4	5.00E-04	(21.0)	2.11E-10	(19.5)	0.00E+00	1.28E-09
RHRB01AA-BOO-LF	4	5.00E-04	(21.0)	2.11E-10	(19.5)	0.00E+00	9.06E-10
NOFLOW-RHR-A1	4	1.00E+00	(2.5)	4.65E-11	(22.5)		
RHR301AX-STR	4	1.10E-04	(23.0)	4.65E-11	(22.5)	0.00E+00	1.26E-10

FIRE-AA SEQUENCE
RISK INCREASE BY BASE EVENT (WITH ASSOCIATED UNCERTAINTY INTERVALS)

BASE EVENT	OCCUR	PROB	(RANK)	RISK INCREASE	(RANK)	LOWER 5%	UPPER 5%
RHR301AX-STR	4	1.10E-04	(23.0)	4.23E-07	(1.0)	0.00E+00	2.75E-06
RHRB01AA-BOO-LF	4	5.00E-04	(21.0)	4.22E-07	(3.0)	0.00E+00	2.75E-06
RHRF48AA-VOO-LF	4	5.00E-04	(21.0)	4.22E-07	(3.0)	0.00E+00	2.75E-06
CSCF068A-VCC-LF	4	5.00E-04	(21.0)	4.22E-07	(3.0)	0.00E+00	2.75E-06
C0DG01P-PMS-LF	4	1.10E-03	(18.5)	4.22E-07	(5.5)	0.00E+00	2.75E-06
RHRC02AA-PMS-LF	4	1.10E-03	(18.5)	4.22E-07	(5.5)	0.00E+00	2.75E-06
LCSC002A-P-UUM	4	3.00E-03	(16.5)	4.21E-07	(7.5)	0.00E+00	2.75E-06
RHRC02AA-P-UUM	4	3.00E-03	(16.5)	4.21E-07	(7.5)	0.00E+00	2.75E-06
RHRH01AX-HTX-LFB	4	6.20E-03	(15.0)	4.20E-07	(9.0)	0.00E+00	2.75E-06
DG2A-GEN-LF-FTR	18	1.90E-02	(13.0)	1.51E-07	(10.0)	0.00E+00	8.89E-07
DG2A-GEN-LF-FTS	18	2.50E-02	(12.0)	1.50E-07	(11.0)	0.00E+00	8.91E-07
LAMBDA-AUX	36	5.40E-02	(11.0)	1.19E-07	(12.0)	0.00E+00	7.18E-07
FAAA	36	6.40E-02	(10.0)	9.89E-08	(13.0)	0.00E+00	4.73E-07
FA9	36	8.00E-02	(9.0)	7.78E-08	(14.0)	0.00E+00	4.12E-07
SUR-002-L	18	1.60E-01	(8.0)	3.42E-08	(15.0)	0.00E+00	1.08E-07
FS2	36	3.00E-01	(7.0)	1.58E-08	(16.0)	0.00E+00	8.99E-08
SUR-027-R	18	1.80E-02	(14.0)	1.33E-08	(17.0)	0.00E+00	4.60E-08
CONT-LEAK	36	7.50E-01	(6.0)	1.93E-09	(18.0)	-2.83E-09	0.00E+00
Q10TG	36	9.30E-01	(5.0)	5.09E-10	(19.0)	0.00E+00	1.62E-09
NOFLOW-RHR-A1	4	1.00E+00	(2.5)	0.00E+00	(21.5)		
NLOSP	36	1.00E+00	(2.5)	0.00E+00	(21.5)		
SCSF06AA-DENER	4	1.00E+00	(2.5)	0.00E+00	(21.5)		
FLOW-RHR-A3	4	1.00E+00	(2.5)	0.00E+00	(21.5)		

FIRE-AA SEQUENCE
UNCERTAINTY IMPORTANCE BY BASE EVENT

BASE EVENT	OCCUR	PROB	(RANK)	% REDUCTION IN THE UNCERTAINTY OF LOG RISK	(RANK)	Y.05/TE.05*	Y.95/TE.95*
SUR-002-L	18	1.60E-01	(8.0)	55.3	(1.0)	NA	0.68
SUR-027-R	18	1.80E-02	(14.0)	9.7	(2.0)	NA	0.81
LAMBDA-AUX	36	5.40E-02	(11.0)	5.7	(3.0)	NA	1.09
RHRH01AX-HTX-LFB	4	6.20E-03	(15.0)	5.0	(4.0)	NA	0.95
DG2A-GEN-LF-FTS	18	2.50E-02	(12.0)	3.2	(5.0)	NA	1.04
FA9	36	8.00E-02	(9.0)	3.2	(6.0)	NA	0.96
CSCF068A-VCC-LF	4	5.00E-04	(21.0)	3.2	(7.5)	NA	0.91
RHRF48AA-VOO-LF	4	5.00E-04	(21.0)	3.2	(7.5)	NA	0.91
FAAA	36	6.40E-02	(10.0)	2.6	(9.0)	NA	0.88
CONT-LEAK	36	7.50E-01	(6.0)	1.7	(10.0)	NA	0.61
DG2A-GEN-LF-FTR	18	1.90E-02	(13.0)	1.6	(11.0)	NA	1.13
FS2	36	3.00E-01	(7.0)	1.4	(12.0)	NA	1.04
LCSC002A-P-UUM	4	3.00E-03	(16.5)	1.3	(13.5)	NA	0.95
RHRC02AA-P-UUM	4	3.00E-03	(16.5)	1.3	(13.5)	NA	0.95
RHR301AX-STR	4	1.10E-04	(23.0)	0.0	(17.0)		
Q10TG	36	9.30E-01	(5.0)	0.0	(17.0)		
C0DG01P-PMS-LF	4	1.10E-03	(18.5)	0.0	(17.0)		
RHRC02AA-PMS-LF	4	1.10E-03	(18.5)	0.0	(17.0)		
RHRB01AA-BOO-LF	4	5.00E-04	(21.0)	0.0	(17.0)		
NOFLOW-RHR-A1	4	1.00E+00	(2.5)				
NLOSP	36	1.00E+00	(2.5)				
SCSF06AA-DENER	4	1.00E+00	(2.5)				
FLOW-RHR-A3	4	1.00E+00	(2.5)				

FIRE-AA SEQUENCE

CUT SET NUMBERS, CUT SET ORDERS, CUT SET FREQUENCIES,
CUMULATIVE NORMALIZED CUT SET FREQUENCIES AND CUT SETS
FOR TOP EVENT FIRE-AA WITH TOP EVENT FREQUENCY 6.77E-09

(THE FIRST COLUMN OF NUMBERS IS THE LINE NUMBERS FOR THE FILE TEMACSETS.DNF)

2	12	10	1.43E-09	0.21208	CONT-LEAK	*	DG2A-GEN-LF-FTS	*	FA9	*	FAAA	*		
3					FS2	*	LAMBDA-AUX	*	NLOSP	*	Q10TG	*		
4					RHRH01AX-HTX-LFB	*	SUR-002-L	+						
5	3	10	1.09E-09	0.37326	CONT-LEAK	*	DG2A-GEN-LF-FTR	*	FA9	*	FAAA	*		
6					FS2	*	LAMBDA-AUX	*	NLOSP	*	Q10TG	*		
7					RHRH01AX-HTX-LFB	*	SUR-002-L	+						
8	14	11	6.94E-10	0.47588	CONT-LEAK	*	DG2A-GEN-LF-FTS	*	FA9	*	FAAA	*		
9					FS2	*	LAMBDA-AUX	*	NLOSP	*	Q10TG	*		
10					RHRC02AA-P-UUM	*	SCSF06AA-DENER	*	SUR-002-L	+				
11	17	10	6.94E-10	0.57850	CONT-LEAK	*	DG2A-GEN-LF-FTS	*	FA9	*	FAAA	*		
12					FS2	*	LAMBDA-AUX	*	LCSC002A-P-UUM	*	NLOSP	*		
13					Q10TG	*	SUR-002-L	+						
14	5	11	5.28E-10	0.65649	CONT-LEAK	*	DG2A-GEN-LF-FTR	*	FA9	*	FAAA	*		
15					FS2	*	LAMBDA-AUX	*	NLOSP	*	Q10TG	*		
16					RHRC02AA-P-UUM	*	SCSF06AA-DENER	*	SUR-002-L	+				
17	8	10	5.28E-10	0.73448	CONT-LEAK	*	DG2A-GEN-LF-FTR	*	FA9	*	FAAA	*		
18					FS2	*	LAMBDA-AUX	*	LCSC002A-P-UUM	*	NLOSP	*		
19					Q10TG	*	SUR-002-L	+						
20	18	10	2.55E-10	0.77211	CONT-LEAK	*	DG2A-GEN-LF-FTS	*	FA9	*	FAAA	*		
21					FS2	*	LAMBDA-AUX	*	NLOSP	*	Q10TG	*		
22					RHRC02AA-PMS-LF	*	SUR-002-L	+						
23	16	10	2.55E-10	0.80973	C0DG01P-PMS-LF	*	CONT-LEAK	*	DG2A-GEN-LF-FTS	*	FA9	*		
24					FAAA	*	FS2	*	LAMBDA-AUX	*	NLOSP	*		
25					Q10TG	*	SUR-002-L	+						
26	9	10	1.93E-10	0.83833	CONT-LEAK	*	DG2A-GEN-LF-FTR	*	FA9	*	FAAA	*		
27					FS2	*	LAMBDA-AUX	*	NLOSP	*	Q10TG	*		
28					RHRC02AA-PMS-LF	*	SUR-002-L	+						
29	7	10	1.93E-10	0.86693	C0DG01P-PMS-LF	*	CONT-LEAK	*	DG2A-GEN-LF-FTR	*	FA9	*		
30					FAAA	*	FS2	*	LAMBDA-AUX	*	NLOSP	*		
31					Q10TG	*	SUR-002-L	+						
32	10	10	1.16E-10	0.88403	CONT-LEAK	*	CSCF068A-VCC-LF	*	DG2A-GEN-LF-FTS	*	FA9	*		
33					FAAA	*	FS2	*	LAMBDA-AUX	*	NLOSP	*		
34					Q10TG	*	SUR-002-L	+						
35	11	10	1.16E-10	0.90113	CONT-LEAK	*	DG2A-GEN-LF-FTS	*	FA9	*	FAAA	*		
36					FS2	*	LAMBDA-AUX	*	NLOSP	*	Q10TG	*		
37					RHRB01AA-BOO-LF	*	SUR-002-L	+						
38	13	11	1.16E-10	0.91824	CONT-LEAK	*	DG2A-GEN-LF-FTS	*	FA9	*	FAAA	*		
39					FLOW-RHR-A3	*	FS2	*	LAMBDA-AUX	*	NLOSP	*		
40					Q10TG	*	RHRF48AA-VOO-LF	*	SUR-002-L	+				

41	1	10	8.79E-11	0.93124	CONT-LEAK	*	CSCF068A-VCC-LF	*	DG2A-GEN-LF-FTR	*	FA9	*
42					FAAA	*	FS2	*	LAMBDA-AUX	*	NLOSP	*
43					Q10TG	*	SUR-002-L	+				
44	4	11	8.79E-11	0.94423	CONT-LEAK	*	DG2A-GEN-LF-FTR	*	FA9	*	FAAA	*
45					FLOW-RHR-A3	*	FS2	*	LAMBDA-AUX	*	NLOSP	*
46					Q10TG	*	RHRF48AA-VOO-LF	*	SUR-002-L	+		
47	2	10	8.79E-11	0.95723	CONT-LEAK	*	DG2A-GEN-LF-FTR	*	FA9	*	FAAA	*
48					FS2	*	LAMBDA-AUX	*	NLOSP	*	Q10TG	*
49					RHRB01AA-BOO-LF	*	SUR-002-L	+				
50	30	10	5.38E-11	0.96519	/CONT-LEAK	*	DG2A-GEN-LF-FTS	*	FA9	*	FAAA	*
51					FS2	*	LAMBDA-AUX	*	NLOSP	*	Q10TG	*
52					RHRH01AX-HTX-LFB	*	SUR-027-R	+				
53	21	10	4.09E-11	0.97123	/CONT-LEAK	*	DG2A-GEN-LF-FTR	*	FA9	*	FAAA	*
54					FS2	*	LAMBDA-AUX	*	NLOSP	*	Q10TG	*
55					RHRH01AX-HTX-LFB	*	SUR-027-R	+				
56	32	11	2.60E-11	0.97508	/CONT-LEAK	*	DG2A-GEN-LF-FTS	*	FA9	*	FAAA	*
57					FS2	*	LAMBDA-AUX	*	NLOSP	*	Q10TG	*
58					RHRC02AA-P-UUM	*	SCSF06AA-DENER	*	SUR-027-R	+		
59	35	10	2.60E-11	0.97893	/CONT-LEAK	*	DG2A-GEN-LF-FTS	*	FA9	*	FAAA	*
60					FS2	*	LAMBDA-AUX	*	LCSC002A-P-UUM	*	NLOSP	*
61					Q10TG	*	SUR-027-R	+				
62	15	11	2.55E-11	0.98269	CONT-LEAK	*	DG2A-GEN-LF-FTS	*	FA9	*	FAAA	*
63					FS2	*	LAMBDA-AUX	*	NLOSP	*	NOFLOW-RHR-A1	*
64					Q10TG	*	RHR301AX-STR	*	SUR-002-L	+		
65	26	10	1.98E-11	0.98561	/CONT-LEAK	*	DG2A-GEN-LF-FTR	*	FA9	*	FAAA	*
66					FS2	*	LAMBDA-AUX	*	LCSC002A-P-UUM	*	NLOSP	*
67					Q10TG	*	SUR-027-R	+				
68	23	11	1.98E-11	0.98854	/CONT-LEAK	*	DG2A-GEN-LF-FTR	*	FA9	*	FAAA	*
69					FS2	*	LAMBDA-AUX	*	NLOSP	*	Q10TG	*
70					RHRC02AA-P-UUM	*	SCSF06AA-DENER	*	SUR-027-R	+		
71	6	11	1.93E-11	0.99140	CONT-LEAK	*	DG2A-GEN-LF-FTR	*	FA9	*	FAAA	*
72					FS2	*	LAMBDA-AUX	*	NLOSP	*	NOFLOW-RHR-A1	*
73					Q10TG	*	RHR301AX-STR	*	SUR-002-L	+		
74	36	10	9.55E-12	0.99281	/CONT-LEAK	*	DG2A-GEN-LF-FTS	*	FA9	*	FAAA	*
75					FS2	*	LAMBDA-AUX	*	NLOSP	*	Q10TG	*
76					RHRC02AA-PMS-LF	*	SUR-027-R	+				
77	34	10	9.55E-12	0.99422	C0DG01P-PMS-LF	*	/CONT-LEAK	*	DG2A-GEN-LF-FTS	*	FA9	*
78					FAAA	*	FS2	*	LAMBDA-AUX	*	NLOSP	*
79					Q10TG	*	SUR-027-R	+				
80	25	10	7.25E-12	0.99529	C0DG01P-PMS-LF	*	/CONT-LEAK	*	DG2A-GEN-LF-FTR	*	FA9	*
81					FAAA	*	FS2	*	LAMBDA-AUX	*	NLOSP	*
82					Q10TG	*	SUR-027-R	+				
83	27	10	7.25E-12	0.99636	/CONT-LEAK	*	DG2A-GEN-LF-FTR	*	FA9	*	FAAA	*
84					FS2	*	LAMBDA-AUX	*	NLOSP	*	Q10TG	*
85					RHRC02AA-PMS-LF	*	SUR-027-R	+				

86	31	11	4.34E-12	0.99701	/CONT-LEAK	*	DG2A-GEN-LF-FTS	*	FA9	*	FAAA	*
87					FLOW-RHR-A3	*	FS2	*	LAMBDA-AUX	*	NLOSP	*
88					Q10TG	*	RHRF48AA-VOO-LF	*	SUR-027-R	+		
89	29	10	4.34E-12	0.99765	/CONT-LEAK	*	DG2A-GEN-LF-FTS	*	FA9	*	FAAA	*
90					FS2	*	LAMBDA-AUX	*	NLOSP	*	Q10TG	*
91					RHRB01AA-BOO-LF	*	SUR-027-R	+				
92	28	10	4.34E-12	0.99829	/CONT-LEAK	*	CSCF068A-VCC-LF	*	DG2A-GEN-LF-FTS	*	FA9	*
93					FAAA	*	FS2	*	LAMBDA-AUX	*	NLOSP	*
94					Q10TG	*	SUR-027-R	+				
95	19	10	3.30E-12	0.99878	/CONT-LEAK	*	CSCF068A-VCC-LF	*	DG2A-GEN-LF-FTR	*	FA9	*
96					FAAA	*	FS2	*	LAMBDA-AUX	*	NLOSP	*
97					Q10TG	*	SUR-027-R	+				
98	22	11	3.30E-12	0.99926	/CONT-LEAK	*	DG2A-GEN-LF-FTR	*	FA9	*	FAAA	*
99					FLOW-RHR-A3	*	FS2	*	LAMBDA-AUX	*	NLOSP	*
100					Q10TG	*	RHRF48AA-VOO-LF	*	SUR-027-R	+		
101	20	10	3.30E-12	0.99975	/CONT-LEAK	*	DG2A-GEN-LF-FTR	*	FA9	*	FAAA	*
102					FS2	*	LAMBDA-AUX	*	NLOSP	*	Q10TG	*
103					RHRB01AA-BOO-LF	*	SUR-027-R	+				
104	33	11	9.55E-13	0.99989	/CONT-LEAK	*	DG2A-GEN-LF-FTS	*	FA9	*	FAAA	*
105					FS2	*	LAMBDA-AUX	*	NLOSP	*	NOFLOW-RHR-A1	*
106					Q10TG	*	RHR301AX-STR	*	SUR-027-R	+		
107	24	11	7.25E-13	1.00000	/CONT-LEAK	*	DG2A-GEN-LF-FTR	*	FA9	*	FAAA	*
108					FS2	*	LAMBDA-AUX	*	NLOSP	*	NOFLOW-RHR-A1	*
109					Q10TG	*	RHR301AX-STR	*	SUR-027-R	.		

TEMAC RUN TIME IN CPU SECONDS 50.22

FIRE-AC SEQUENCE

TOP EVENT FIRE-AC CONTAINS 72 EVENTS IN 120 CUT SETS

THE FREQUENCY OF TOP EVENT FIRE-AC IS 4.51E-07

DESCRIPTIVE STATISTICS FOR THE FREQUENCY OF TOP EVENT FIRE-AC

N	400
MEAN	5.42E-07
STD DEV	1.74E-06
LOWER 5%	0.00E+00
LOWER 25%	0.00E+00
MEDIAN	0.00E+00
UPPER 25%	1.67E-07
UPPER 5%	2.79E-06

90% UNCERTAINTY INTERVAL FOR TOP EVENT FREQUENCY (INNERMOST BRACKETS DENOTE INTERQUARTILE RANGE, ASTERISK DENOTES MEDIAN, N DENOTES NOMINAL VALUE AND M DENOTES MEAN)

NOMENCLATURE:

PD = PARTIAL DERIVATIVE

TEF = FREQUENCY OF THE TOP EVENT

EV(J) = PROBABILITY OF EVENT J FOR BASE EVENTS
= FREQUENCY OF EVENT J FOR INITIATING EVENTS

MEASURES:

1. FOR BASE EVENTS AND INITIATING EVENTS:

RISK REDUCTION = PD x EV(J)
= TEF - TEF(EVALUATED WITH EV(J) = 0)

2. FOR BASE EVENTS ONLY:

RISK INCREASE = PD - RISK REDUCTION
= PD x (1 - EV(J))
= TEF(EVALUATED WITH EV(J) = 1) - TEF

FIRE-AC SEQUENCE
RISK REDUCTION BY BASE EVENT (WITH ASSOCIATED UNCERTAINTY INTERVALS)

BASE EVENT	OCCUR	PROB	(RANK)	RISK REDUCTION	(RANK)	LOWER 5%	UPPER 5%
FAAC	120	1.60E-03	(23.0)	4.51E-07	(2.0)	0.00E+00	2.79E-06
Q11TG	120	9.90E-01	(5.0)	4.51E-07	(2.0)	0.00E+00	2.79E-06
LAMBDA-AUX	120	5.40E-02	(9.0)	4.51E-07	(2.0)	0.00E+00	2.79E-06
SUR-002-L	60	1.60E-01	(7.0)	4.35E-07	(4.0)	0.00E+00	2.79E-06
CONT-LEAK	120	7.50E-01	(6.0)	3.86E-07	(5.0)	0.00E+00	2.79E-06
RHRH01BX-HTX-LFB	2	6.20E-03	(12.0)	6.60E-08	(6.0)	0.00E+00	5.89E-07
SCSF06BB-DENER	8	1.00E+00	(2.5)	4.15E-08	(7.0)		
RHRC02BB-P-NDUUM	2	3.00E-03	(14.5)	3.19E-08	(9.5)	0.00E+00	1.41E-07
RHRC02BB-P-UUM	2	3.00E-03	(14.5)	3.19E-08	(9.5)	0.00E+00	1.38E-07
RHRC003B-P-UUM	2	3.00E-03	(14.5)	3.19E-08	(9.5)	0.00E+00	1.38E-07
C2DG01P-P-UUM	2	3.00E-03	(14.5)	3.19E-08	(9.5)	0.00E+00	1.41E-07
RHRB01BB-BOO-CC	2	2.50E-03	(19.5)	2.66E-08	(13.0)	0.00E+00	1.29E-07
C2DG01P-PMS-CC	2	2.50E-03	(19.5)	2.66E-08	(13.0)	0.00E+00	1.29E-07
SEVY03CB-FMS-CC	2	2.50E-03	(19.5)	2.66E-08	(13.0)	0.00E+00	1.29E-07
SUR-027-R	60	1.80E-02	(11.0)	1.63E-08	(15.0)	0.00E+00	2.79E-07
1EDC2DEP-FROP-4	4	1.00E+00	(2.5)	1.53E-08	(16.0)		
CSCD300B-PLG-LF	2	1.20E-03	(24.0)	1.28E-08	(17.0)	0.00E+00	6.08E-08
C2DG01P-PMS-LF	2	1.10E-03	(25.5)	1.17E-08	(18.5)	0.00E+00	7.15E-08
RHRC02BB-PMS-LF	2	1.10E-03	(25.5)	1.17E-08	(18.5)	0.00E+00	7.15E-08
SEVY03AX-ACX-LFI	2	8.40E-04	(27.0)	8.95E-09	(20.0)	0.00E+00	5.20E-08
FLOW-RHR-B3	6	1.00E+00	(2.5)	8.77E-09	(21.0)		
EE-CSCD300B-PLG	2	7.20E-04	(28.5)	7.67E-09	(22.5)	0.00E+00	3.41E-08
EE-C2DG01F-PLG	2	7.20E-04	(28.5)	7.67E-09	(22.5)	0.00E+00	3.41E-08
C2DG01F-PLG-LF	2	5.80E-04	(30.0)	6.18E-09	(24.0)	0.00E+00	2.69E-08
SEVY03CB-FMS-LF	2	5.40E-04	(31.0)	5.75E-09	(25.0)	0.00E+00	4.21E-08
RHRF48BB-VOO-LF	2	5.00E-04	(34.0)	5.32E-09	(28.0)	0.00E+00	3.16E-08
CSCF068B-VCC-LF	2	5.00E-04	(34.0)	5.32E-09	(28.0)	0.00E+00	3.16E-08
SEVY03CB-F-UUM	2	5.00E-04	(34.0)	5.32E-09	(28.0)	0.00E+00	4.35E-08
RHRB01BB-BOO-LF	2	5.00E-04	(34.0)	5.32E-09	(28.0)	0.00E+00	2.71E-08
2DG1PK18-ROO-LFO	2	5.00E-04	(34.0)	5.32E-09	(28.0)	0.00E+00	3.18E-08
RHRF64BB-V-UUM	2	3.00E-04	(45.5)	3.19E-09	(39.5)	0.00E+00	1.89E-08
RHRF87BB-V-UUM	2	3.00E-04	(45.5)	3.19E-09	(39.5)	0.00E+00	1.89E-08
RHRF74BB-V-UUM	2	3.00E-04	(45.5)	3.19E-09	(39.5)	0.00E+00	1.89E-08
RHRF65BB-N-UUM	2	3.00E-04	(45.5)	3.19E-09	(39.5)	0.00E+00	1.89E-08
RHRF55BX-R-UUM	2	3.00E-04	(45.5)	3.19E-09	(39.5)	0.00E+00	1.89E-08
RHRF60BB-S-UUM	2	3.00E-04	(45.5)	3.19E-09	(39.5)	0.00E+00	1.89E-08
RHRF51BB-N-UUM	2	3.00E-04	(45.5)	3.19E-09	(39.5)	0.00E+00	1.89E-08
C2DG01F-S-UUM	2	3.00E-04	(45.5)	3.19E-09	(39.5)	0.00E+00	1.33E-08
RHRF48BB-V-UUM	2	3.00E-04	(45.5)	3.19E-09	(39.5)	0.00E+00	1.89E-08
RHRF47BB-V-UUM	2	3.00E-04	(45.5)	3.19E-09	(39.5)	0.00E+00	1.89E-08

CSCF068B-V-UUM	2	3.00E-04 (45.5)	3.19E-09 (39.5)	0.00E+00	1.89E-08
CSCD300B-S-UUM	2	3.00E-04 (45.5)	3.19E-09 (39.5)	0.00E+00	1.33E-08
2DG01PSC-OOO-LFO	2	3.00E-04 (45.5)	3.19E-09 (39.5)	0.00E+00	1.97E-08
2DG01PK18CA-LFOO	2	3.00E-04 (45.5)	3.19E-09 (39.5)	0.00E+00	1.97E-08
RHRH01BX-H-UUM	2	3.00E-04 (45.5)	3.19E-09 (39.5)	0.00E+00	1.33E-08
RHRF88BX-R-UUM	2	3.00E-04 (45.5)	3.19E-09 (39.5)	0.00E+00	1.89E-08
SEVY03AX-A-UUM	2	3.00E-04 (45.5)	3.19E-09 (39.5)	0.00E+00	1.33E-08
SCSF06BB-V-UUM	2	3.00E-04 (45.5)	3.19E-09 (39.5)	0.00E+00	1.89E-08
LPCI-BETA	2	1.10E-01 (8.0)	2.93E-09 (49.5)	0.00E+00	1.43E-08
LPCI-PMS-CM	2	2.50E-03 (19.5)	2.93E-09 (49.5)	0.00E+00	1.43E-08
NOFLOW-RHR-B1	4	1.00E+00 (2.5)	2.34E-09 (51.0)		
LPCI-MOV-BETA	4	3.00E-02 (10.0)	1.60E-09 (52.0)	0.00E+00	5.89E-09
RHRF98BX-XOC-LF	2	1.10E-04 (57.0)	1.17E-09 (55.0)	0.00E+00	7.93E-09
RHRF47BB-VOC-LF	2	1.10E-04 (57.0)	1.17E-09 (55.0)	0.00E+00	7.93E-09
RHRF04BB-VOC-LF	2	1.10E-04 (57.0)	1.17E-09 (55.0)	0.00E+00	7.93E-09
RHRF03BB-VOC-LF	2	1.10E-04 (57.0)	1.17E-09 (55.0)	0.00E+00	7.93E-09
RHR301BX-STR	2	1.10E-04 (57.0)	1.17E-09 (55.0)	0.00E+00	5.65E-09
RHRF31BX-CCC-LF	2	1.00E-04 (60.5)	1.06E-09 (58.5)	0.00E+00	8.53E-09
C2DGF002-CCC-LF	2	1.00E-04 (60.5)	1.06E-09 (58.5)	0.00E+00	8.53E-09
CSCB068X-BCO-LF	2	8.40E-05 (63.0)	8.95E-10 (61.0)	0.00E+00	4.07E-09
CCB2DG1P-BCO-LF	2	8.40E-05 (63.0)	8.95E-10 (61.0)	0.00E+00	4.07E-09
1EB16212-BCO	2	8.40E-05 (63.0)	8.95E-10 (61.0)	0.00E+00	4.07E-09
LPCI-MOV-CM2	2	2.50E-03 (19.5)	7.99E-10 (63.5)	0.00E+00	2.94E-09
LPCI-MOV-CM1	2	2.50E-03 (19.5)	7.99E-10 (63.5)	0.00E+00	2.94E-09
1EB36YB-BCO-LF	2	7.20E-05 (68.0)	7.67E-10 (68.0)	0.00E+00	3.14E-09
1EB36Y1X-BCO-LF	2	7.20E-05 (68.0)	7.67E-10 (68.0)	0.00E+00	3.14E-09
1EB236B-BCO-LF	2	7.20E-05 (68.0)	7.67E-10 (68.0)	0.00E+00	3.14E-09
1EB36XB-BCO-LF	2	7.20E-05 (68.0)	7.67E-10 (68.0)	0.00E+00	3.14E-09
1EB212YX-BCO-LF	2	7.20E-05 (68.0)	7.67E-10 (68.0)	0.00E+00	3.14E-09
SEVB001X-BCO-LF	2	7.20E-05 (68.0)	7.67E-10 (68.0)	0.00E+00	3.14E-09
1EB2Y22X-BCO	2	7.20E-05 (68.0)	7.67E-10 (68.0)	0.00E+00	3.14E-09
RHRB03BX-BCO-LF	2	2.40E-05 (72.0)	2.56E-10 (72.0)	0.00E+00	1.12E-09

FIRE-AC SEQUENCE
RISK INCREASE BY BASE EVENT (WITH ASSOCIATED UNCERTAINTY INTERVALS)

BASE EVENT	OCCUR	PROB	(RANK)	RISK INCREASE	(RANK)	LOWER 5%	UPPER 5%
FAAC	120	1.60E-03	(23.0)	2.81E-04	(1.0)	0.00E+00	2.16E-03
RHRB03BX-BCO-LF	2	2.40E-05	(72.0)	1.06E-05	(2.0)	0.00E+00	7.76E-05
1EB36YB-BCO-LF	2	7.20E-05	(68.0)	1.06E-05	(6.0)	0.00E+00	7.76E-05
1EB212YX-BCO-LF	2	7.20E-05	(68.0)	1.06E-05	(6.0)	0.00E+00	7.76E-05
SEVB001X-BCO-LF	2	7.20E-05	(68.0)	1.06E-05	(6.0)	0.00E+00	7.76E-05
1EB36XB-BCO-LF	2	7.20E-05	(68.0)	1.06E-05	(6.0)	0.00E+00	7.76E-05
1EB36Y1X-BCO-LF	2	7.20E-05	(68.0)	1.06E-05	(6.0)	0.00E+00	7.76E-05
1EB236B-BCO-LF	2	7.20E-05	(68.0)	1.06E-05	(6.0)	0.00E+00	7.76E-05
1EB2Y22X-BCO	2	7.20E-05	(68.0)	1.06E-05	(6.0)	0.00E+00	7.76E-05
CSCB068X-BCO-LF	2	8.40E-05	(63.0)	1.06E-05	(11.0)	0.00E+00	7.76E-05
CCB2DG1P-BCO-LF	2	8.40E-05	(63.0)	1.06E-05	(11.0)	0.00E+00	7.76E-05
1EB16212-BCO	2	8.40E-05	(63.0)	1.06E-05	(11.0)	0.00E+00	7.76E-05
RHRF31BX-CCC-LF	2	1.00E-04	(60.5)	1.06E-05	(16.0)	0.00E+00	7.76E-05
C2DGF002-CCC-LF	2	1.00E-04	(60.5)	1.06E-05	(16.0)	0.00E+00	7.76E-05
RHRF04BB-VOC-LF	2	1.10E-04	(57.0)	1.06E-05	(16.0)	0.00E+00	7.76E-05
RHRF98BX-XOC-LF	2	1.10E-04	(57.0)	1.06E-05	(16.0)	0.00E+00	7.76E-05
RHRF47BB-VOC-LF	2	1.10E-04	(57.0)	1.06E-05	(16.0)	0.00E+00	7.76E-05
RHR301BX-STR	2	1.10E-04	(57.0)	1.06E-05	(16.0)	0.00E+00	7.76E-05
RHRF03BB-VOC-LF	2	1.10E-04	(57.0)	1.06E-05	(16.0)	0.00E+00	7.76E-05
RHRF64BB-V-UUM	2	3.00E-04	(45.5)	1.06E-05	(28.5)	0.00E+00	7.76E-05
RHRF87BB-V-UUM	2	3.00E-04	(45.5)	1.06E-05	(28.5)	0.00E+00	7.76E-05
RHRF65BB-N-UUM	2	3.00E-04	(45.5)	1.06E-05	(28.5)	0.00E+00	7.76E-05
C2DG01F-S-UUM	2	3.00E-04	(45.5)	1.06E-05	(28.5)	0.00E+00	7.76E-05
RHRF51BB-N-UUM	2	3.00E-04	(45.5)	1.06E-05	(28.5)	0.00E+00	7.76E-05
CSCD300B-S-UUM	2	3.00E-04	(45.5)	1.06E-05	(28.5)	0.00E+00	7.76E-05
RHRF60BB-S-UUM	2	3.00E-04	(45.5)	1.06E-05	(28.5)	0.00E+00	7.76E-05
CSCF068B-V-UUM	2	3.00E-04	(45.5)	1.06E-05	(28.5)	0.00E+00	7.76E-05
RHRF55BX-R-UUM	2	3.00E-04	(45.5)	1.06E-05	(28.5)	0.00E+00	7.76E-05
RHRH01BX-H-UUM	2	3.00E-04	(45.5)	1.06E-05	(28.5)	0.00E+00	7.76E-05
RHRF88BX-R-UUM	2	3.00E-04	(45.5)	1.06E-05	(28.5)	0.00E+00	7.76E-05
RHRF48BB-V-UUM	2	3.00E-04	(45.5)	1.06E-05	(28.5)	0.00E+00	7.76E-05
2DG01PSC-OOO-LFO	2	3.00E-04	(45.5)	1.06E-05	(28.5)	0.00E+00	7.76E-05
RHRF74BB-V-UUM	2	3.00E-04	(45.5)	1.06E-05	(28.5)	0.00E+00	7.76E-05
2DG01PK18CA-LFOO	2	3.00E-04	(45.5)	1.06E-05	(28.5)	0.00E+00	7.76E-05
SEVY03AX-A-UUM	2	3.00E-04	(45.5)	1.06E-05	(28.5)	0.00E+00	7.76E-05
SCSF06BB-V-UUM	2	3.00E-04	(45.5)	1.06E-05	(28.5)	0.00E+00	7.76E-05
RHRF47BB-V-UUM	2	3.00E-04	(45.5)	1.06E-05	(28.5)	0.00E+00	7.76E-05
SEVY03CB-F-UUM	2	5.00E-04	(34.0)	1.06E-05	(40.0)	0.00E+00	7.76E-05
RHRF48BB-VOO-LF	2	5.00E-04	(34.0)	1.06E-05	(40.0)	0.00E+00	7.76E-05
CSCF068B-VCC-LF	2	5.00E-04	(34.0)	1.06E-05	(40.0)	0.00E+00	7.76E-05

2DG1PK18-ROO-LFO	2	5.00E-04 (34.0)	1.06E-05 (40.0)	0.00E+00	7.76E-05
RHRB01BB-BOO-LF	2	5.00E-04 (34.0)	1.06E-05 (40.0)	0.00E+00	7.76E-05
SEVY03CB-FMS-LF	2	5.40E-04 (31.0)	1.06E-05 (43.0)	0.00E+00	7.76E-05
C2DG01F-PLG-LF	2	5.80E-04 (30.0)	1.06E-05 (44.0)	0.00E+00	7.76E-05
EE-CSCD300B-PLG	2	7.20E-04 (28.5)	1.06E-05 (45.5)	0.00E+00	7.76E-05
EE-C2DG01F-PLG	2	7.20E-04 (28.5)	1.06E-05 (45.5)	0.00E+00	7.76E-05
SEVY03AX-ACX-LFI	2	8.40E-04 (27.0)	1.06E-05 (47.0)	0.00E+00	7.76E-05
RHRC02BB-PMS-LF	2	1.10E-03 (25.5)	1.06E-05 (48.5)	0.00E+00	7.76E-05
C2DG01P-PMS-LF	2	1.10E-03 (25.5)	1.06E-05 (48.5)	0.00E+00	7.76E-05
CSCD300B-PLG-LF	2	1.20E-03 (24.0)	1.06E-05 (50.0)	0.00E+00	7.76E-05
C2DG01P-PMS-CC	2	2.50E-03 (19.5)	1.06E-05 (52.0)	0.00E+00	7.75E-05
RHRB01BB-BOO-CC	2	2.50E-03 (19.5)	1.06E-05 (52.0)	0.00E+00	7.75E-05
SEVY03CB-FMS-CC	2	2.50E-03 (19.5)	1.06E-05 (52.0)	0.00E+00	7.75E-05
C2DG01P-P-UUM	2	3.00E-03 (14.5)	1.06E-05 (55.5)	0.00E+00	7.74E-05
RHRC02BB-P-UUM	2	3.00E-03 (14.5)	1.06E-05 (55.5)	0.00E+00	7.76E-05
RHRC02BB-P-NDUUM	2	3.00E-03 (14.5)	1.06E-05 (55.5)	0.00E+00	7.74E-05
RHRC003B-P-UUM	2	3.00E-03 (14.5)	1.06E-05 (55.5)	0.00E+00	7.76E-05
RHRH01BX-HTX-LFB	2	6.20E-03 (12.0)	1.06E-05 (58.0)	0.00E+00	7.67E-05
LAMBDA-AUX	120	5.40E-02 (9.0)	7.90E-06 (59.0)	0.00E+00	5.16E-05
SUR-002-L	60	1.60E-01 (7.0)	2.28E-06 (60.0)	0.00E+00	8.83E-06
LPCI-PMS-CM	2	2.50E-03 (19.5)	1.17E-06 (61.0)	0.00E+00	8.39E-06
SUR-027-R	60	1.80E-02 (11.0)	8.89E-07 (62.0)	0.00E+00	4.23E-06
LPCI-MOV-CM2	2	2.50E-03 (19.5)	3.19E-07 (63.5)	0.00E+00	2.13E-06
LPCI-MOV-CM1	2	2.50E-03 (19.5)	3.19E-07 (63.5)	0.00E+00	2.13E-06
CONT-LEAK	120	7.50E-01 (6.0)	1.29E-07 (65.0)	-2.79E-07	0.00E+00
LPCI-MOV-BETA	4	3.00E-02 (10.0)	5.16E-08 (66.0)	0.00E+00	2.55E-07
LPCI-BETA	2	1.10E-01 (8.0)	2.37E-08 (67.0)	0.00E+00	1.06E-07
Q11TG	120	9.90E-01 (5.0)	4.56E-09 (68.0)	0.00E+00	6.69E-08
SCSF06BB-DENER	8	1.00E+00 (2.5)	0.00E+00 (70.5)		
FLOW-RHR-B3	6	1.00E+00 (2.5)	0.00E+00 (70.5)		
NOFLOW-RHR-B1	4	1.00E+00 (2.5)	0.00E+00 (70.5)		
1EDC2DEP-FROP-4	4	1.00E+00 (2.5)	0.00E+00 (70.5)		

FIRE-AC SEQUENCE
UNCERTAINTY IMPORTANCE BY BASE EVENT

BASE EVENT	OCCUR	PROB	(RANK)	% REDUCTION IN THE UNCERTAINTY OF LOG RISK	(RANK)	Y.05/TE.05*	Y.95/TE.95*
SUR-002-L	60	1.60E-01	(7.0)	55.9	(1.0)	NA	0.55
SUR-027-R	60	1.80E-02	(11.0)	19.7	(2.0)	NA	1.00
CONT-LEAK	120	7.50E-01	(6.0)	11.7	(3.0)	NA	0.75
LAMBDA-AUX	120	5.40E-02	(9.0)	3.2	(4.0)	NA	1.05
RHRH01BX-HTX-LFB	2	6.20E-03	(12.0)	2.5	(5.0)	NA	1.01
SEVY03AX-ACX-LFI	2	8.40E-04	(27.0)	2.3	(6.0)	NA	1.01
FAAC	120	1.60E-03	(23.0)	2.2	(7.0)	NA	1.24
RHRF48BB-VOO-LF	2	5.00E-04	(34.0)	1.8	(8.5)	NA	1.01
CSCF068B-VCC-LF	2	5.00E-04	(34.0)	1.8	(8.5)	NA	1.01
EE-C2DG01F-PLG	2	7.20E-04	(28.5)	1.7	(10.5)	NA	1.01
EE-CSCD300B-PLG	2	7.20E-04	(28.5)	1.7	(10.5)	NA	1.01
LPCI-MOV-BETA	4	3.00E-02	(10.0)	1.7	(12.0)	NA	0.99
RHRC02BB-P-NDUUM	2	3.00E-03	(14.5)	1.6	(13.5)	NA	1.04
C2DG01P-P-UUM	2	3.00E-03	(14.5)	1.6	(13.5)	NA	1.04
RHRF55BX-R-UUM	2	3.00E-04	(45.5)	1.6	(20.5)	NA	1.08
RHRF74BB-V-UUM	2	3.00E-04	(45.5)	1.6	(20.5)	NA	1.08
RHRF65BB-N-UUM	2	3.00E-04	(45.5)	1.6	(20.5)	NA	1.08
RHRF51BB-N-UUM	2	3.00E-04	(45.5)	1.6	(20.5)	NA	1.08
RHRF48BB-V-UUM	2	3.00E-04	(45.5)	1.6	(20.5)	NA	1.08
CSCF068B-V-UUM	2	3.00E-04	(45.5)	1.6	(20.5)	NA	1.08
RHRF47BB-V-UUM	2	3.00E-04	(45.5)	1.6	(20.5)	NA	1.08
RHRF88BX-R-UUM	2	3.00E-04	(45.5)	1.6	(20.5)	NA	1.08
SCSF06BB-V-UUM	2	3.00E-04	(45.5)	1.6	(20.5)	NA	1.08
RHRF64BB-V-UUM	2	3.00E-04	(45.5)	1.6	(20.5)	NA	1.08
RHRF87BB-V-UUM	2	3.00E-04	(45.5)	1.6	(20.5)	NA	1.08
RHRF60BB-S-UUM	2	3.00E-04	(45.5)	1.6	(20.5)	NA	1.08
C2DG01F-PLG-LF	2	5.80E-04	(30.0)	1.4	(27.0)	NA	1.00
CSCD300B-PLG-LF	2	1.20E-03	(24.0)	1.4	(28.0)	NA	1.01
C2DGF002-CCC-LF	2	1.00E-04	(60.5)	1.3	(29.5)	NA	1.00
RHRF31BX-CCC-LF	2	1.00E-04	(60.5)	1.3	(29.5)	NA	1.00
RHRB01BB-BOO-LF	2	5.00E-04	(34.0)	1.2	(31.0)	NA	1.01
RHRF47BB-VOC-LF	2	1.10E-04	(57.0)	1.1	(33.5)	NA	1.00
RHRF04BB-VOC-LF	2	1.10E-04	(57.0)	1.1	(33.5)	NA	1.00
RHRF03BB-VOC-LF	2	1.10E-04	(57.0)	1.1	(33.5)	NA	1.00
RHRF98BX-XOC-LF	2	1.10E-04	(57.0)	1.1	(33.5)	NA	1.00
2DG01PSC-OOO-LFO	2	3.00E-04	(45.5)	1.0	(36.5)	NA	1.00
2DG01PK18CA-LFOO	2	3.00E-04	(45.5)	1.0	(36.5)	NA	1.00
RHRB03BX-BCO-LF	2	2.40E-05	(72.0)	1.0	(38.0)	NA	1.00
SEVY03CB-F-UUM	2	5.00E-04	(34.0)	0.8	(39.0)	NA	1.00
C2DG01P-PMS-CC	2	2.50E-03	(19.5)	0.0	(54.0)		

LPCI-BETA	2	1.10E-01 (8.0)	0.0	(54.0)
1EB236B-BCO-LF	2	7.20E-05 (68.0)	0.0	(54.0)
1EB36YB-BCO-LF	2	7.20E-05 (68.0)	0.0	(54.0)
C2DG01F-S-UUM	2	3.00E-04 (45.5)	0.0	(54.0)
1EB36Y1X-BCO-LF	2	7.20E-05 (68.0)	0.0	(54.0)
RHRC02BB-PMS-LF	2	1.10E-03 (25.5)	0.0	(54.0)
CSCD300B-S-UUM	2	3.00E-04 (45.5)	0.0	(54.0)
2DG1PK18-ROO-LFO	2	5.00E-04 (34.0)	0.0	(54.0)
RHRC02BB-P-UUM	2	3.00E-03 (14.5)	0.0	(54.0)
RHRC003B-P-UUM	2	3.00E-03 (14.5)	0.0	(54.0)
CSCB068X-BCO-LF	2	8.40E-05 (63.0)	0.0	(54.0)
1EB36XB-BCO-LF	2	7.20E-05 (68.0)	0.0	(54.0)
RHRB01BB-BOO-CC	2	2.50E-03 (19.5)	0.0	(54.0)
RHR301BX-STR	2	1.10E-04 (57.0)	0.0	(54.0)
Q11TG	120	9.90E-01 (5.0)	0.0	(54.0)
CCB2DG1P-BCO-LF	2	8.40E-05 (63.0)	0.0	(54.0)
SEVY03CB-FMS-LF	2	5.40E-04 (31.0)	0.0	(54.0)
LPCI-PMS-CM	2	2.50E-03 (19.5)	0.0	(54.0)
1EB2Y22X-BCO	2	7.20E-05 (68.0)	0.0	(54.0)
RHRH01BX-H-UUM	2	3.00E-04 (45.5)	0.0	(54.0)
SEVY03AX-A-UUM	2	3.00E-04 (45.5)	0.0	(54.0)
LPCI-MOV-CM2	2	2.50E-03 (19.5)	0.0	(54.0)
SEVB001X-BCO-LF	2	7.20E-05 (68.0)	0.0	(54.0)
LPCI-MOV-CM1	2	2.50E-03 (19.5)	0.0	(54.0)
C2DG01P-PMS-LF	2	1.10E-03 (25.5)	0.0	(54.0)
1EB212YX-BCO-LF	2	7.20E-05 (68.0)	0.0	(54.0)
1EB16212-BCO	2	8.40E-05 (63.0)	0.0	(54.0)
SEVY03CB-FMS-CC	2	2.50E-03 (19.5)	0.0	(54.0)
SCSF06BB-DENER	8	1.00E+00 (2.5)		
FLOW-RHR-B3	6	1.00E+00 (2.5)		
NOFLOW-RHR-B1	4	1.00E+00 (2.5)		
1EDC2DEP-FROP-4	4	1.00E+00 (2.5)		

FIRE-AC SEQUENCE

CUT SET NUMBERS, CUT SET ORDERS, CUT SET FREQUENCIES,
CUMULATIVE NORMALIZED CUT SET FREQUENCIES AND CUT SETS
FOR TOP EVENT FIRE-AC WITH TOP EVENT FREQUENCY 4.51E-07

(THE FIRST COLUMN OF NUMBERS IS THE LINE NUMBERS FOR THE FILE TEMACSETS.DNF)

2	7	6	6.36E-08	0.14109	CONT-LEAK	*	FAAC	*	LAMBDA-AUX	*	Q11TG	*
3					RHRH01BX-HTX-LFB	*	SUR-002-L	+				
4	52	6	3.08E-08	0.20936	C2DG01P-P-UUM	*	CONT-LEAK	*	FAAC	*	LAMBDA-AUX	*
5					Q11TG	*	SUR-002-L	+				
6	23	6	3.08E-08	0.27763	CONT-LEAK	*	FAAC	*	LAMBDA-AUX	*	Q11TG	*
7					RHRC003B-P-UUM	*	SUR-002-L	+				
8	13	6	3.08E-08	0.34590	CONT-LEAK	*	FAAC	*	LAMBDA-AUX	*	Q11TG	*
9					RHRC02BB-P-NDUUM	*	SUR-002-L	+				
10	34	7	3.08E-08	0.41417	CONT-LEAK	*	FAAC	*	LAMBDA-AUX	*	Q11TG	*
11					RHRC02BB-P-UUM	*	SCSF06BB-DENER	*	SUR-002-L	+		
12	54	6	2.57E-08	0.47106	CONT-LEAK	*	FAAC	*	LAMBDA-AUX	*	Q11TG	*
13					RHRB01BB-BOO-CC	*	SUR-002-L	+				
14	11	6	2.57E-08	0.52795	C2DG01P-PMS-CC	*	CONT-LEAK	*	FAAC	*	LAMBDA-AUX	*
15					Q11TG	*	SUR-002-L	+				
16	60	6	2.57E-08	0.58484	CONT-LEAK	*	FAAC	*	LAMBDA-AUX	*	Q11TG	*
17					SEVY03CB-FMS-CC	*	SUR-002-L	+				
18	26	6	1.23E-08	0.61215	CONT-LEAK	*	CSCD300B-PLG-LF	*	FAAC	*	LAMBDA-AUX	*
19					Q11TG	*	SUR-002-L	+				
20	3	6	1.13E-08	0.63718	CONT-LEAK	*	FAAC	*	LAMBDA-AUX	*	Q11TG	*
21					RHRC02BB-PMS-LF	*	SUR-002-L	+				
22	10	6	1.13E-08	0.66222	C2DG01P-PMS-LF	*	CONT-LEAK	*	FAAC	*	LAMBDA-AUX	*
23					Q11TG	*	SUR-002-L	+				
24	39	6	8.62E-09	0.68133	CONT-LEAK	*	FAAC	*	LAMBDA-AUX	*	Q11TG	*
25					SEVY03AX-ACX-LFI	*	SUR-002-L	+				
26	21	7	7.39E-09	0.69772	1EDC2DEP-FROP-4	*	CONT-LEAK	*	EE-CSCD300B-PLG	*	FAAC	*
27					LAMBDA-AUX	*	Q11TG	*	SUR-002-L	+		
28	8	7	7.39E-09	0.71410	1EDC2DEP-FROP-4	*	CONT-LEAK	*	EE-C2DG01F-PLG	*	FAAC	*
29					LAMBDA-AUX	*	Q11TG	*	SUR-002-L	+		
30	56	6	5.95E-09	0.72730	C2DG01F-PLG-LF	*	CONT-LEAK	*	FAAC	*	LAMBDA-AUX	*
31					Q11TG	*	SUR-002-L	+				
32	42	6	5.54E-09	0.73959	CONT-LEAK	*	FAAC	*	LAMBDA-AUX	*	Q11TG	*
33					SEVY03CB-FMS-LF	*	SUR-002-L	+				
34	41	6	5.13E-09	0.75097	CONT-LEAK	*	FAAC	*	LAMBDA-AUX	*	Q11TG	*
35					SEVY03CB-F-UUM	*	SUR-002-L	+				
36	27	6	5.13E-09	0.76235	CONT-LEAK	*	FAAC	*	LAMBDA-AUX	*	Q11TG	*
37					RHRB01BB-BOO-LF	*	SUR-002-L	+				
38	29	6	5.13E-09	0.77372	CONT-LEAK	*	CSCF068B-VCC-LF	*	FAAC	*	LAMBDA-AUX	*
39					Q11TG	*	SUR-002-L	+				

40	9	7	5.13E-09	0.78510	CONT-LEAK	*	FAAC	*	FLOW-RHR-B3	*	LAMBDA-AUX	*
41					Q11TG	*	RHRF48BB-VOO-LF	*	SUR-002-L	+		
42	17	6	5.13E-09	0.79648	2DG1PK18-ROO-LFO	*	CONT-LEAK	*	FAAC	*	LAMBDA-AUX	*
43					Q11TG	*	SUR-002-L	+				
44	15	6	3.08E-09	0.80331	CONT-LEAK	*	FAAC	*	LAMBDA-AUX	*	Q11TG	*
45					RHRF74BB-V-UUM	*	SUR-002-L	+				
46	36	7	3.08E-09	0.81013	CONT-LEAK	*	FAAC	*	LAMBDA-AUX	*	Q11TG	*
47					RHRF64BB-V-UUM	*	SCSF06BB-DENER	*	SUR-002-L	+		
48	6	6	3.08E-09	0.81696	CONT-LEAK	*	FAAC	*	LAMBDA-AUX	*	Q11TG	*
49					RHRH01BX-H-UUM	*	SUR-002-L	+				
50	1	6	3.08E-09	0.82379	2DG01PK18CA-LFOO	*	CONT-LEAK	*	FAAC	*	LAMBDA-AUX	*
51					Q11TG	*	SUR-002-L	+				
52	43	6	3.08E-09	0.83062	CONT-LEAK	*	FAAC	*	LAMBDA-AUX	*	Q11TG	*
53					SEVY03AX-A-UUM	*	SUR-002-L	+				
54	12	6	3.08E-09	0.83744	CONT-LEAK	*	CSCD300B-S-UUM	*	FAAC	*	LAMBDA-AUX	*
55					Q11TG	*	SUR-002-L	+				
56	28	7	3.08E-09	0.84427	CONT-LEAK	*	FAAC	*	FLOW-RHR-B3	*	LAMBDA-AUX	*
57					Q11TG	*	RHRF48BB-V-UUM	*	SUR-002-L	+		
58	57	6	3.08E-09	0.85110	CONT-LEAK	*	FAAC	*	LAMBDA-AUX	*	Q11TG	*
59					RHRF87BB-V-UUM	*	SUR-002-L	+				
60	31	6	3.08E-09	0.85792	CONT-LEAK	*	FAAC	*	LAMBDA-AUX	*	Q11TG	*
61					RHRF60BB-S-UUM	*	SUR-002-L	+				
62	2	6	3.08E-09	0.86475	CONT-LEAK	*	FAAC	*	LAMBDA-AUX	*	Q11TG	*
63					RHRF55BX-R-UUM	*	SUR-002-L	+				
64	4	6	3.08E-09	0.87158	CONT-LEAK	*	FAAC	*	LAMBDA-AUX	*	Q11TG	*
65					RHRF65BB-N-UUM	*	SUR-002-L	+				
66	22	6	3.08E-09	0.87840	CONT-LEAK	*	FAAC	*	LAMBDA-AUX	*	Q11TG	*
67					SCSF06BB-V-UUM	*	SUR-002-L	+				
68	49	7	3.08E-09	0.88523	CONT-LEAK	*	FAAC	*	LAMBDA-AUX	*	Q11TG	*
69					RHRF47BB-V-UUM	*	SCSF06BB-DENER	*	SUR-002-L	+		
70	20	6	3.08E-09	0.89206	CONT-LEAK	*	CSCF068B-V-UUM	*	FAAC	*	LAMBDA-AUX	*
71					Q11TG	*	SUR-002-L	+				
72	24	6	3.08E-09	0.89889	2DG01PSC-OOO-LFO	*	CONT-LEAK	*	FAAC	*	LAMBDA-AUX	*
73					Q11TG	*	SUR-002-L	+				
74	18	7	3.08E-09	0.90571	CONT-LEAK	*	FAAC	*	LAMBDA-AUX	*	Q11TG	*
75					RHRF88BX-R-UUM	*	SCSF06BB-DENER	*	SUR-002-L	+		
76	25	6	3.08E-09	0.91254	C2DG01F-S-UUM	*	CONT-LEAK	*	FAAC	*	LAMBDA-AUX	*
77					Q11TG	*	SUR-002-L	+				
78	30	6	3.08E-09	0.91937	CONT-LEAK	*	FAAC	*	LAMBDA-AUX	*	Q11TG	*
79					RHRF51BB-N-UUM	*	SUR-002-L	+				
80	46	7	2.82E-09	0.92562	CONT-LEAK	*	FAAC	*	LAMBDA-AUX	*	LPCI-BETA	*
81					LPCI-PMS-CM	*	Q11TG	*	SUR-002-L	+		
82	67	6	2.39E-09	0.93092	/CONT-LEAK	*	FAAC	*	LAMBDA-AUX	*	Q11TG	*
83					RHRH01BX-HTX-LFB	*	SUR-027-R	+				
84	83	6	1.15E-09	0.93348	/CONT-LEAK	*	FAAC	*	LAMBDA-AUX	*	Q11TG	*
85					RHRC003B-P-UUM	*	SUR-027-R	+				

86	94	7	1.15E-09	0.93604	/CONT-LEAK	*	FAAC	*	LAMBDA-AUX	*	Q11TG	*	
87					RHRC02BB-P-UUM	*	SCSF06BB-DENER	*	SUR-027-R	+			
88	73	6	1.15E-09	0.93860	/CONT-LEAK	*	FAAC	*	LAMBDA-AUX	*	Q11TG	*	
89					RHRC02BB-P-NDUUM	*	SUR-027-R	+					
90	112	6	1.15E-09	0.94116	C2DG01P-P-UUM	*	/CONT-LEAK	*	FAAC	*	LAMBDA-AUX	*	
91					Q11TG	*	SUR-027-R	+					
92	50	6	1.13E-09	0.94366	CONT-LEAK	*	FAAC	*	LAMBDA-AUX	*	Q11TG	*	
93					RHRF98BX-XOC-LF	*	SUR-002-L	+					
94	5	7	1.13E-09	0.94616	CONT-LEAK	*	FAAC	*	LAMBDA-AUX	*	NOFLOW-RHR-B1	*	
95					Q11TG	*	RHRF04BB-VOC-LF	*	SUR-002-L	+			
96	44	6	1.13E-09	0.94867	CONT-LEAK	*	FAAC	*	LAMBDA-AUX	*	Q11TG	*	
97					RHRF03BB-VOC-LF	*	SUR-002-L	+					
98	38	7	1.13E-09	0.95117	CONT-LEAK	*	FAAC	*	LAMBDA-AUX	*	NOFLOW-RHR-B1	*	
99					Q11TG	*	RHR301BX-STR	*	SUR-002-L	+			
100	37	6	1.13E-09	0.95367	CONT-LEAK	*	FAAC	*	LAMBDA-AUX	*	Q11TG	*	
101					RHRF47BB-VOC-LF	*	SUR-002-L	+					
102	35	6	1.03E-09	0.95595	C2DGF002-CCC-LF	*	CONT-LEAK	*	FAAC	*	LAMBDA-AUX	*	
103					Q11TG	*	SUR-002-L	+					
104	55	6	1.03E-09	0.95822	CONT-LEAK	*	FAAC	*	LAMBDA-AUX	*	Q11TG	*	
105					RHRF31BX-CCC-LF	*	SUR-002-L	+					
106	120	6	9.62E-10	0.96036	/CONT-LEAK	*	FAAC	*	LAMBDA-AUX	*	Q11TG	*	
107					SEVY03CB-FMS-CC	*	SUR-027-R	+					
108	71	6	9.62E-10	0.96249	C2DG01P-FMS-CC	*	/CONT-LEAK	*	FAAC	*	LAMBDA-AUX	*	
109					Q11TG	*	SUR-027-R	+					
110	114	6	9.62E-10	0.96462	/CONT-LEAK	*	FAAC	*	LAMBDA-AUX	*	Q11TG	*	
111					RHRB01BB-BOO-CC	*	SUR-027-R	+					
112	59	6	8.62E-10	0.96654	CONT-LEAK	*	CSCB068X-BCO-LF	*	FAAC	*	LAMBDA-AUX	*	
113					Q11TG	*	SUR-002-L	+					
114	33	6	8.62E-10	0.96845	1EB16212-BCO	*	CONT-LEAK	*	FAAC	*	LAMBDA-AUX	*	
115					Q11TG	*	SUR-002-L	+					
116	16	6	8.62E-10	0.97036	CCB2DG1P-BCO-LF	*	CONT-LEAK	*	FAAC	*	LAMBDA-AUX	*	
117					Q11TG	*	SUR-002-L	+					
118	48	7	7.70E-10	0.97207	CONT-LEAK	*	FAAC	*	LAMBDA-AUX	*	LPCI-MOV-BETA	*	
119					LPCI-MOV-CM2	*	Q11TG	*	SUR-002-L	+			
120	47	7	7.70E-10	0.97377	CONT-LEAK	*	FAAC	*	LAMBDA-AUX	*	LPCI-MOV-BETA	*	
121					LPCI-MOV-CM1	*	Q11TG	*	SUR-002-L	+			
122	14	6	7.39E-10	0.97541	CONT-LEAK	*	FAAC	*	LAMBDA-AUX	*	Q11TG	*	
123					SEVB001X-BCO-LF	*	SUR-002-L	+					
124	58	6	7.39E-10	0.97705	1EB36YB-BCO-LF	*	CONT-LEAK	*	FAAC	*	LAMBDA-AUX	*	
125					Q11TG	*	SUR-002-L	+					
126	51	6	7.39E-10	0.97869	1EB2Y22X-BCO	*	CONT-LEAK	*	FAAC	*	LAMBDA-AUX	*	
127					Q11TG	*	SUR-002-L	+					
128	53	6	7.39E-10	0.98033	1EB236B-BCO-LF	*	CONT-LEAK	*	FAAC	*	LAMBDA-AUX	*	
129					Q11TG	*	SUR-002-L	+					
130	40	6	7.39E-10	0.98196	1EB212YX-BCO-LF	*	CONT-LEAK	*	FAAC	*	LAMBDA-AUX	*	
131					Q11TG	*	SUR-002-L	+					

132	19	6	7.39E-10	0.98360	1EB36XB-BCO-LF	*	CONT-LEAK	*	FAAC	*	LAMBDA-AUX	*
133					Q11TG	*	SUR-002-L	+				
134	32	6	7.39E-10	0.98524	1EB36Y1X-BCO-LF	*	CONT-LEAK	*	FAAC	*	LAMBDA-AUX	*
135					Q11TG	*	SUR-002-L	+				
136	86	6	4.62E-10	0.98627	/CONT-LEAK	*	CSCD300B-PLG-LF	*	FAAC	*	LAMBDA-AUX	*
137					Q11TG	*	SUR-027-R	+				
138	63	6	4.23E-10	0.98720	/CONT-LEAK	*	FAAC	*	LAMBDA-AUX	*	Q11TG	*
139					RHRC02BB-PMS-LF	*	SUR-027-R	+				
140	70	6	4.23E-10	0.98814	C2DG01P-PMS-LF	*	/CONT-LEAK	*	FAAC	*	LAMBDA-AUX	*
141					Q11TG	*	SUR-027-R	+				
142	99	6	3.23E-10	0.98886	/CONT-LEAK	*	FAAC	*	LAMBDA-AUX	*	Q11TG	*
143					SEVY03AX-ACX-LFI	*	SUR-027-R	+				
144	81	7	2.77E-10	0.98947	1EDC2DEP-FROP-4	*	/CONT-LEAK	*	EE-CSCD300B-PLG	*	FAAC	*
145					LAMBDA-AUX	*	Q11TG	*	SUR-027-R	+		
146	68	7	2.77E-10	0.99009	1EDC2DEP-FROP-4	*	/CONT-LEAK	*	EE-C2DG01F-PLG	*	FAAC	*
147					LAMBDA-AUX	*	Q11TG	*	SUR-027-R	+		
148	45	7	2.46E-10	0.99063	CONT-LEAK	*	FAAC	*	FLOW-RHR-B3	*	LAMBDA-AUX	*
149					Q11TG	*	RHRB03BX-BCO-LF	*	SUR-002-L	+		
150	116	6	2.23E-10	0.99113	C2DG01F-PLG-LF	*	/CONT-LEAK	*	FAAC	*	LAMBDA-AUX	*
151					Q11TG	*	SUR-027-R	+				
152	102	6	2.08E-10	0.99159	/CONT-LEAK	*	FAAC	*	LAMBDA-AUX	*	Q11TG	*
153					SEVY03CB-FMS-LF	*	SUR-027-R	+				
154	101	6	1.92E-10	0.99202	/CONT-LEAK	*	FAAC	*	LAMBDA-AUX	*	Q11TG	*
155					SEVY03CB-F-UUM	*	SUR-027-R	+				
156	87	6	1.92E-10	0.99244	/CONT-LEAK	*	FAAC	*	LAMBDA-AUX	*	Q11TG	*
157					RHRB01BB-BOO-LF	*	SUR-027-R	+				
158	69	7	1.92E-10	0.99287	/CONT-LEAK	*	FAAC	*	FLOW-RHR-B3	*	LAMBDA-AUX	*
159					Q11TG	*	RHRF48BB-VOO-LF	*	SUR-027-R	+		
160	89	6	1.92E-10	0.99330	/CONT-LEAK	*	CSCF068B-VCC-LF	*	FAAC	*	LAMBDA-AUX	*
161					Q11TG	*	SUR-027-R	+				
162	77	6	1.92E-10	0.99372	2DG1PK18-ROO-LFO	*	/CONT-LEAK	*	FAAC	*	LAMBDA-AUX	*
163					Q11TG	*	SUR-027-R	+				
164	62	6	1.15E-10	0.99398	/CONT-LEAK	*	FAAC	*	LAMBDA-AUX	*	Q11TG	*
165					RHRF55BX-R-UUM	*	SUR-027-R	+				
166	117	6	1.15E-10	0.99424	/CONT-LEAK	*	FAAC	*	LAMBDA-AUX	*	Q11TG	*
167					RHRF87BB-V-UUM	*	SUR-027-R	+				
168	109	7	1.15E-10	0.99449	/CONT-LEAK	*	FAAC	*	LAMBDA-AUX	*	Q11TG	*
169					RHRF47BB-V-UUM	*	SCSF06BB-DENER	*	SUR-027-R	+		
170	103	6	1.15E-10	0.99475	/CONT-LEAK	*	FAAC	*	LAMBDA-AUX	*	Q11TG	*
171					SEVY03AX-A-UUM	*	SUR-027-R	+				
172	96	7	1.15E-10	0.99500	/CONT-LEAK	*	FAAC	*	LAMBDA-AUX	*	Q11TG	*
173					RHRF64BB-V-UUM	*	SCSF06BB-DENER	*	SUR-027-R	+		
174	91	6	1.15E-10	0.99526	/CONT-LEAK	*	FAAC	*	LAMBDA-AUX	*	Q11TG	*
175					RHRF60BB-S-UUM	*	SUR-027-R	+				
176	90	6	1.15E-10	0.99552	/CONT-LEAK	*	FAAC	*	LAMBDA-AUX	*	Q11TG	*
177					RHRF51BB-N-UUM	*	SUR-027-R	+				

178	88	7	1.15E-10	0.99577	/CONT-LEAK	*	FAAC	*	FLOW-RHR-B3	*	LAMBDA-AUX	*	
179					Q11TG	*	RHRF48BB-V-UUM	*	SUR-027-R	+			
180	82	6	1.15E-10	0.99603	/CONT-LEAK	*	FAAC	*	LAMBDA-AUX	*	Q11TG	*	
181					SCSF06BB-V-UUM	*	SUR-027-R	+					
182	78	7	1.15E-10	0.99628	/CONT-LEAK	*	FAAC	*	LAMBDA-AUX	*	Q11TG	*	
183					RHRF88BX-R-UUM	*	SCSF06BB-DENER	*	SUR-027-R	+			
184	75	6	1.15E-10	0.99654	/CONT-LEAK	*	FAAC	*	LAMBDA-AUX	*	Q11TG	*	
185					RHRF74BB-V-UUM	*	SUR-027-R	+					
186	66	6	1.15E-10	0.99680	/CONT-LEAK	*	FAAC	*	LAMBDA-AUX	*	Q11TG	*	
187					RHRH01BX-H-UUM	*	SUR-027-R	+					
188	64	6	1.15E-10	0.99705	/CONT-LEAK	*	FAAC	*	LAMBDA-AUX	*	Q11TG	*	
189					RHRF65BB-N-UUM	*	SUR-027-R	+					
190	61	6	1.15E-10	0.99731	2DG01PK18CA-LFOO	*	/CONT-LEAK	*	FAAC	*	LAMBDA-AUX	*	
191					Q11TG	*	SUR-027-R	+					
192	85	6	1.15E-10	0.99756	C2DG01F-S-UUM	*	/CONT-LEAK	*	FAAC	*	LAMBDA-AUX	*	
193					Q11TG	*	SUR-027-R	+					
194	84	6	1.15E-10	0.99782	2DG01PSC-OOO-LFO	*	/CONT-LEAK	*	FAAC	*	LAMBDA-AUX	*	
195					Q11TG	*	SUR-027-R	+					
196	80	6	1.15E-10	0.99808	/CONT-LEAK	*	CSCF068B-V-UUM	*	FAAC	*	LAMBDA-AUX	*	
197					Q11TG	*	SUR-027-R	+					
198	72	6	1.15E-10	0.99833	/CONT-LEAK	*	CSCD300B-S-UUM	*	FAAC	*	LAMBDA-AUX	*	
199					Q11TG	*	SUR-027-R	+					
200	106	7	1.06E-10	0.99857	/CONT-LEAK	*	FAAC	*	LAMBDA-AUX	*	LPCI-BETA	*	
201					LPCI-PMS-CM	*	Q11TG	*	SUR-027-R	+			
202	110	6	4.23E-11	0.99866	/CONT-LEAK	*	FAAC	*	LAMBDA-AUX	*	Q11TG	*	
203					RHRF98BX-XOC-LF	*	SUR-027-R	+					
204	104	6	4.23E-11	0.99875	/CONT-LEAK	*	FAAC	*	LAMBDA-AUX	*	Q11TG	*	
205					RHRF03BB-VOC-LF	*	SUR-027-R	+					
206	98	7	4.23E-11	0.99885	/CONT-LEAK	*	FAAC	*	LAMBDA-AUX	*	NOFLOW-RHR-B1	*	
207					Q11TG	*	RHR301BX-STR	*	SUR-027-R	+			
208	97	6	4.23E-11	0.99894	/CONT-LEAK	*	FAAC	*	LAMBDA-AUX	*	Q11TG	*	
209					RHRF47BB-VOC-LF	*	SUR-027-R	+					
210	65	7	4.23E-11	0.99904	/CONT-LEAK	*	FAAC	*	LAMBDA-AUX	*	NOFLOW-RHR-B1	*	
211					Q11TG	*	RHRF04BB-VOC-LF	*	SUR-027-R	+			
212	115	6	3.85E-11	0.99912	/CONT-LEAK	*	FAAC	*	LAMBDA-AUX	*	Q11TG	*	
213					RHRF31BX-CCC-LF	*	SUR-027-R	+					
214	95	6	3.85E-11	0.99921	C2DGF002-CCC-LF	*	/CONT-LEAK	*	FAAC	*	LAMBDA-AUX	*	
215					Q11TG	*	SUR-027-R	+					
216	119	6	3.23E-11	0.99928	/CONT-LEAK	*	CSCB068X-BCO-LF	*	FAAC	*	LAMBDA-AUX	*	
217					Q11TG	*	SUR-027-R	+					
218	93	6	3.23E-11	0.99935	1EB16212-BCO	*	/CONT-LEAK	*	FAAC	*	LAMBDA-AUX	*	
219					Q11TG	*	SUR-027-R	+					
220	76	6	3.23E-11	0.99942	CCB2DG1P-BCO-LF	*	/CONT-LEAK	*	FAAC	*	LAMBDA-AUX	*	
221					Q11TG	*	SUR-027-R	+					
222	108	7	2.89E-11	0.99949	/CONT-LEAK	*	FAAC	*	LAMBDA-AUX	*	LPCI-MOV-BETA	*	
223					LPCI-MOV-CM2	*	Q11TG	*	SUR-027-R	+			

224	107	7	2.89E-11	0.99955	/CONT-LEAK	*	FAAC	*	LAMBDA-AUX	*	LPCI-MOV-BETA	*
225					LPCI-MOV-CM1	*	Q11TG	*	SUR-027-R	+		
226	74	6	2.77E-11	0.99961	/CONT-LEAK	*	FAAC	*	LAMBDA-AUX	*	Q11TG	*
227					SEVB001X-BCO-LF	*	SUR-027-R	+				
228	118	6	2.77E-11	0.99967	1EB36YB-BCO-LF	*	/CONT-LEAK	*	FAAC	*	LAMBDA-AUX	*
229					Q11TG	*	SUR-027-R	+				
230	113	6	2.77E-11	0.99973	1EB236B-BCO-LF	*	/CONT-LEAK	*	FAAC	*	LAMBDA-AUX	*
231					Q11TG	*	SUR-027-R	+				
232	111	6	2.77E-11	0.99980	1EB2Y22X-BCO	*	/CONT-LEAK	*	FAAC	*	LAMBDA-AUX	*
233					Q11TG	*	SUR-027-R	+				
234	100	6	2.77E-11	0.99986	1EB212YX-BCO-LF	*	/CONT-LEAK	*	FAAC	*	LAMBDA-AUX	*
235					Q11TG	*	SUR-027-R	+				
236	92	6	2.77E-11	0.99992	1EB36Y1X-BCO-LF	*	/CONT-LEAK	*	FAAC	*	LAMBDA-AUX	*
237					Q11TG	*	SUR-027-R	+				
238	79	6	2.77E-11	0.99998	1EB36XB-BCO-LF	*	/CONT-LEAK	*	FAAC	*	LAMBDA-AUX	*
239					Q11TG	*	SUR-027-R	+				
240	105	7	9.24E-12	1.00000	/CONT-LEAK	*	FAAC	*	FLOW-RHR-B3	*	LAMBDA-AUX	*
241					Q11TG	*	RHRB03BX-BCO-LF	*	SUR-027-R			

TEMAC RUN TIME IN CPU SECONDS 183.38

FIRE-CR SEQUENCE

TOP EVENT FIRE-CR CONTAINS 3 EVENTS IN 1 CUT SETS

THE FREQUENCY OF TOP EVENT FIRE-CR IS 2.18E-05

DESCRIPTIVE STATISTICS FOR THE FREQUENCY OF TOP EVENT FIRE-CR

N	400
MEAN	1.39E-05
STD DEV	1.41E-04
LOWER 5%	6.18E-14
LOWER 25%	4.19E-13
MEDIAN	1.25E-12
UPPER 25%	4.37E-12
UPPER 5%	3.67E-06

90% UNCERTAINTY INTERVAL FOR TOP EVENT FREQUENCY (INNERMOST BRACKETS DENOTE INTERQUARTILE RANGE, ASTERISK DENOTES MEDIAN, N DENOTES NOMINAL VALUE AND M DENOTES MEAN)

NOMENCLATURE:

PD = PARTIAL DERIVATIVE

TEF = FREQUENCY OF THE TOP EVENT

EV(J) = PROBABILITY OF EVENT J FOR BASE EVENTS
= FREQUENCY OF EVENT J FOR INITIATING EVENTS

MEASURES:

1. FOR BASE EVENTS AND INITIATING EVENTS:

RISK REDUCTION = PD x EV(J)
= TEF - TEF(EVALUATED WITH EV(J) = 0)

2. FOR BASE EVENTS ONLY:

RISK INCREASE = PD - RISK REDUCTION
= PD x (1 - EV(J))
= TEF(EVALUATED WITH EV(J) = 1) - TEF

FIRE-CR SEQUENCE
RISK REDUCTION BY BASE EVENT (WITH ASSOCIATED UNCERTAINTY INTERVALS)

BASE EVENT	OCCUR	PROB	(RANK)	RISK REDUCTION	(RANK)	LOWER 5%	UPPER 5%
LAMBDA-CR	1	3.40E-03	(3.0)	2.18E-05	(2.0)	6.18E-14	3.67E-06
R-OP-1	1	6.40E-02	(2.0)	2.18E-05	(2.0)	6.18E-14	3.67E-06
FR	1	1.00E-01	(1.0)	2.18E-05	(2.0)	6.18E-14	3.67E-06

FIRE-CR SEQUENCE
RISK INCREASE BY BASE EVENT (WITH ASSOCIATED UNCERTAINTY INTERVALS)

BASE EVENT	OCCUR	PROB	(RANK)	RISK INCREASE	(RANK)	LOWER 5%	UPPER 5%
LAMBDA-CR	1	3.40E-03	(3.0)	6.38E-03	(1.0)	4.23E-04	2.23E-02
R-OP-1	1	6.40E-02	(2.0)	3.18E-04	(2.0)	1.63E-12	1.57E-04
FR	1	1.00E-01	(1.0)	1.96E-04	(3.0)	9.66E-13	7.86E-05

FIRE-CR SEQUENCE
UNCERTAINTY IMPORTANCE BY BASE EVENT

BASE EVENT	OCCUR	PROB	(RANK)	% REDUCTION IN THE UNCERTAINTY OF LOG RISK	(RANK)	Y.05/TE.05*	Y.95/TE.95*
LAMBDA-CR	1	3.40E-03	(3.0)	93.7	(1.0)	23256600.00	20.67
R-OP-1	1	6.40E-02	(2.0)	3.9	(2.0)	1.84	3.27
FR	1	1.00E-01	(1.0)	3.3	(3.0)	1.66	2.22

FIRE-CR SEQUENCE

CUT SET NUMBERS, CUT SET ORDERS, CUT SET FREQUENCIES,
CUMULATIVE NORMALIZED CUT SET FREQUENCIES AND CUT SETS
FOR TOP EVENT FIRE-CR WITH TOP EVENT FREQUENCY 2.18E-05

(THE FIRST COLUMN OF NUMBERS IS THE LINE NUMBERS FOR THE FILE TEMACSETS.DNF)

2	1	3	2.18E-05	1.00000	FR	*	LAMBDA-CR	*	R-OP-1

TEMAC RUN TIME IN CPU SECONDS 29.33

FIRE-E-S2 SEQUENCE

TOP EVENT FIRE-E-S2 CONTAINS 26 EVENTS IN 20 CUT SETS

THE FREQUENCY OF TOP EVENT FIRE-E-S2 IS 1.22E-07

DESCRIPTIVE STATISTICS FOR THE FREQUENCY OF TOP EVENT FIRE-E-S2

N	400
MEAN	1.14E-07
STD DEV	2.82E-07
LOWER 5%	1.55E-09
LOWER 25%	1.07E-08
MEDIAN	3.08E-08
UPPER 25%	8.40E-08
UPPER 5%	5.69E-07

90% UNCERTAINTY INTERVAL FOR TOP EVENT FREQUENCY (INNERMOST BRACKETS DENOTE INTERQUARTILE RANGE, ASTERISK DENOTES MEDIAN, N DENOTES NOMINAL VALUE AND M DENOTES MEAN)

NOMENCLATURE:

PD = PARTIAL DERIVATIVE

TEF = FREQUENCY OF THE TOP EVENT

EV(J) = PROBABILITY OF EVENT J FOR BASE EVENTS
= FREQUENCY OF EVENT J FOR INITIATING EVENTS

MEASURES:

1. FOR BASE EVENTS AND INITIATING EVENTS:

RISK REDUCTION = PD x EV(J)
= TEF - TEF(EVALUATED WITH EV(J) = 0)

2. FOR BASE EVENTS ONLY:

RISK INCREASE = PD - RISK REDUCTION
= PD x (1 - EV(J))
= TEF(EVALUATED WITH EV(J) = 1) - TEF

FIRE-E-S2 SEQUENCE
RISK REDUCTION BY BASE EVENT (WITH ASSOCIATED UNCERTAINTY INTERVALS)

BASE EVENT	OCCUR	PROB	(RANK)	RISK REDUCTION	(RANK)	LOWER 5%	UPPER 5%
LAMBDA-TB	20	3.70E-02	(5.0)	1.22E-07	(3.0)	1.55E-09	5.69E-07
FAE	20	3.80E-03	(6.0)	1.22E-07	(3.0)	1.55E-09	5.69E-07
FS1	20	1.70E-01	(4.0)	1.22E-07	(3.0)	1.55E-09	5.69E-07
FA1	20	3.00E-01	(3.0)	1.22E-07	(3.0)	1.55E-09	5.69E-07
Q1TG	20	8.30E-01	(2.0)	1.22E-07	(3.0)	1.55E-09	5.69E-07
CSCC002-P-UUM	1	3.00E-03	(7.5)	1.79E-08	(6.5)	5.51E-11	6.09E-08
HCSC001C-P-UUM	1	3.00E-03	(7.5)	1.79E-08	(6.5)	5.51E-11	6.09E-08
HCSC001C-PMS-CS	1	2.50E-03	(10.0)	1.49E-08	(9.0)	5.25E-11	5.66E-08
CSCC002-PMS-CC	1	2.50E-03	(10.0)	1.49E-08	(9.0)	5.25E-11	5.66E-08
SWVY02CC-FMS-CC	1	2.50E-03	(10.0)	1.49E-08	(9.0)	5.25E-11	5.66E-08
HCSC001C-PMS-LF	1	1.10E-03	(12.5)	6.55E-09	(11.5)	4.02E-11	2.22E-08
CSCC002-PMS-LF	1	1.10E-03	(12.5)	6.55E-09	(11.5)	4.02E-11	2.22E-08
SWVY02AX-ACX-LFI	1	8.40E-04	(14.0)	5.00E-09	(13.0)	1.48E-11	1.39E-08
EE-CSCD300-PLG	1	7.20E-04	(15.0)	4.29E-09	(14.0)	1.55E-11	1.65E-08
CSCD300-PLG-LF	1	5.80E-04	(16.0)	3.45E-09	(15.0)	1.32E-11	1.26E-08
SWVY02CC-FMS-LF	1	5.40E-04	(17.0)	3.21E-09	(16.0)	5.60E-11	1.41E-08
EE-CST-LVL	2	1.00E+00	(1.0)	3.20E-09	(17.0)		
SWVY02CC-F-UUM	1	5.00E-04	(19.0)	2.98E-09	(19.0)	5.06E-11	1.13E-08
HCSF015C-VCC-LF	1	5.00E-04	(19.0)	2.98E-09	(19.0)	9.27E-12	8.53E-09
HCSF004C-VCC-LF	1	5.00E-04	(19.0)	2.98E-09	(19.0)	9.27E-12	8.53E-09
RLOSP	1	2.10E-04	(21.0)	1.25E-09	(21.0)	1.62E-11	4.95E-09
HC001CB-BCO-LF	1	8.40E-05	(22.5)	5.00E-10	(22.5)	1.82E-12	2.01E-09
CCBC002-BCO-LF	1	8.40E-05	(22.5)	5.00E-10	(22.5)	1.82E-12	2.01E-09
SWVB001X-BCO-LF	1	7.20E-05	(24.5)	4.29E-10	(24.5)	1.53E-12	1.61E-09
1EB43C-BCO-LF	1	7.20E-05	(24.5)	4.29E-10	(24.5)	1.53E-12	1.61E-09
HCSD001X-STR	1	3.80E-05	(26.0)	2.26E-10	(26.0)	8.64E-13	8.63E-10

FIRE-E-S2 SEQUENCE
RISK INCREASE BY BASE EVENT (WITH ASSOCIATED UNCERTAINTY INTERVALS)

BASE EVENT	OCCUR	PROB	(RANK)	RISK INCREASE	(RANK)	LOWER 5%	UPPER 5%
FAE	20	3.80E-03	(6.0)	3.19E-05	(1.0)	7.13E-07	1.13E-04
HCSD001X-STR	1	3.80E-05	(26.0)	5.95E-06	(2.0)	1.48E-07	1.94E-05
1EB43C-BCO-LF	1	7.20E-05	(24.5)	5.95E-06	(3.5)	1.48E-07	1.94E-05
SWVB001X-BCO-LF	1	7.20E-05	(24.5)	5.95E-06	(3.5)	1.48E-07	1.94E-05
HC001CB-BCO-LF	1	8.40E-05	(22.5)	5.95E-06	(5.5)	1.48E-07	1.94E-05
CCBC002-BCO-LF	1	8.40E-05	(22.5)	5.95E-06	(5.5)	1.48E-07	1.94E-05
RLOSP	1	2.10E-04	(21.0)	5.95E-06	(7.0)	1.48E-07	1.94E-05
HCSF004C-VCC-LF	1	5.00E-04	(19.0)	5.95E-06	(9.0)	1.48E-07	1.94E-05
HCSF015C-VCC-LF	1	5.00E-04	(19.0)	5.95E-06	(9.0)	1.48E-07	1.94E-05
SWVY02CC-F-UUM	1	5.00E-04	(19.0)	5.95E-06	(9.0)	1.48E-07	1.94E-05
SWVY02CC-FMS-LF	1	5.40E-04	(17.0)	5.95E-06	(11.0)	1.48E-07	1.94E-05
CSCD300-PLG-LF	1	5.80E-04	(16.0)	5.95E-06	(12.0)	1.48E-07	1.94E-05
EE-CSCD300-PLG	1	7.20E-04	(15.0)	5.95E-06	(13.0)	1.48E-07	1.94E-05
SWVY02AX-ACX-LFI	1	8.40E-04	(14.0)	5.95E-06	(14.0)	1.48E-07	1.94E-05
HCSC001C-PMS-LF	1	1.10E-03	(12.5)	5.95E-06	(15.5)	1.48E-07	1.94E-05
CSCC002-PMS-LF	1	1.10E-03	(12.5)	5.95E-06	(15.5)	1.48E-07	1.94E-05
HCSC001C-PMS-CS	1	2.50E-03	(10.0)	5.94E-06	(18.0)	1.48E-07	1.94E-05
SWVY02CC-FMS-CC	1	2.50E-03	(10.0)	5.94E-06	(18.0)	1.48E-07	1.94E-05
CSCC002-PMS-CC	1	2.50E-03	(10.0)	5.94E-06	(18.0)	1.48E-07	1.94E-05
HCSC001C-P-UUM	1	3.00E-03	(7.5)	5.93E-06	(20.5)	1.48E-07	1.94E-05
CSCC002-P-UUM	1	3.00E-03	(7.5)	5.93E-06	(20.5)	1.48E-07	1.94E-05
LAMBDA-TB	20	3.70E-02	(5.0)	3.17E-06	(22.0)	1.19E-07	1.22E-05
FS1	20	1.70E-01	(4.0)	5.94E-07	(23.0)	1.40E-08	2.47E-06
FA1	20	3.00E-01	(3.0)	2.84E-07	(24.0)	4.86E-09	1.03E-06
Q1TG	20	8.30E-01	(2.0)	2.49E-08	(25.0)	8.64E-11	1.19E-07
EE-CST-LVL	2	1.00E+00	(1.0)	0.00E+00	(26.0)		

FIRE-E-S2 SEQUENCE
UNCERTAINTY IMPORTANCE BY BASE EVENT

BASE EVENT	OCCUR	PROB	(RANK)	% REDUCTION IN THE UNCERTAINTY OF LOG RISK	(RANK)	Y.05/TE.05*	Y.95/TE.95*
LAMBDA-TB	20	3.70E-02	(5.0)	31.0	(1.0)	3.05	0.85
FA1	20	3.00E-01	(3.0)	19.1	(2.0)	1.76	0.76
FS1	20	1.70E-01	(4.0)	18.3	(3.0)	1.75	0.86
FAE	20	3.80E-03	(6.0)	17.6	(4.0)	1.75	0.76
HCSC001C-PMS-CS	1	2.50E-03	(10.0)	9.9	(6.0)	1.35	0.76
SWVY02CC-FMS-CC	1	2.50E-03	(10.0)	9.9	(6.0)	1.35	0.76
CSCC002-PMS-CC	1	2.50E-03	(10.0)	9.9	(6.0)	1.35	0.76
CSCC002-P-UUM	1	3.00E-03	(7.5)	7.0	(8.5)	1.43	0.82
HCSC001C-P-UUM	1	3.00E-03	(7.5)	7.0	(8.5)	1.43	0.82
HCSF015C-VCC-LF	1	5.00E-04	(19.0)	2.9	(10.5)	0.93	0.99
HCSF004C-VCC-LF	1	5.00E-04	(19.0)	2.9	(10.5)	0.93	0.99
HCSD001X-STR	1	3.80E-05	(26.0)	2.7	(12.0)	1.00	1.00
SWVY02CC-FMS-LF	1	5.40E-04	(17.0)	2.5	(13.0)	1.01	0.99
CSCD300-PLG-LF	1	5.80E-04	(16.0)	2.5	(14.0)	1.00	0.95
Q1TG	20	8.30E-01	(2.0)	1.7	(15.0)	1.04	0.95
SWVY02AX-ACX-LFI	1	8.40E-04	(14.0)	1.3	(16.0)	1.00	1.00
HCSC001C-PMS-LF	1	1.10E-03	(12.5)	0.8	(17.5)	1.17	1.01
CSCC002-PMS-LF	1	1.10E-03	(12.5)	0.8	(17.5)	1.17	1.01
SWVY02CC-F-UUM	1	5.00E-04	(19.0)	0.7	(19.0)	1.01	1.00
EE-CSCD300-PLG	1	7.20E-04	(15.0)	0.6	(20.0)	1.02	1.01
HC001CB-BCO-LF	1	8.40E-05	(22.5)	0.0	(23.0)		
SWVB001X-BCO-LF	1	7.20E-05	(24.5)	0.0	(23.0)		
RLOSP	1	2.10E-04	(21.0)	0.0	(23.0)		
CCBC002-BCO-LF	1	8.40E-05	(22.5)	0.0	(23.0)		
1EB43C-BCO-LF	1	7.20E-05	(24.5)	0.0	(23.0)		
EE-CST-LVL	2	1.00E+00	(1.0)				

FIRE-E-S2 SEQUENCE

CUT SET NUMBERS, CUT SET ORDERS, CUT SET FREQUENCIES,
CUMULATIVE NORMALIZED CUT SET FREQUENCIES AND CUT SETS
FOR TOP EVENT FIRE-E-S2 WITH TOP EVENT FREQUENCY 1.22E-07

(THE FIRST COLUMN OF NUMBERS IS THE LINE NUMBERS FOR THE FILE TEMACSETS.DNF)

2	5	6	1.79E-08	0.14677	CSCC002-P-UUM	*	FA1	*	FAE	*	FS1	*	
3					LAMBDA-TB	*	Q1TG	+					
4	12	6	1.79E-08	0.29354	FA1	*	FAE	*	FS1	*	HCSC001C-P-UUM	*	
5					LAMBDA-TB	*	Q1TG	+					
6	18	6	1.49E-08	0.41585	FA1	*	FAE	*	FS1	*	LAMBDA-TB	*	
7					Q1TG	*	SWVY02CC-FMS-CC	+					
8	10	6	1.49E-08	0.53816	FA1	*	FAE	*	FS1	*	HCSC001C-PMS-CS	*	
9					LAMBDA-TB	*	Q1TG	+					
10	3	6	1.49E-08	0.66047	CSCC002-PMS-CC	*	FA1	*	FAE	*	FS1	*	
11					LAMBDA-TB	*	Q1TG	+					
12	11	6	6.55E-09	0.71429	FA1	*	FAE	*	FS1	*	HCSC001C-PMS-LF	*	
13					LAMBDA-TB	*	Q1TG	+					
14	4	6	6.55E-09	0.76810	CSCC002-PMS-LF	*	FA1	*	FAE	*	FS1	*	
15					LAMBDA-TB	*	Q1TG	+					
16	17	6	5.00E-09	0.80920	FA1	*	FAE	*	FS1	*	LAMBDA-TB	*	
17					Q1TG	*	SWVY02AX-ACX-LFI	+					
18	7	6	4.29E-09	0.84442	EE-CSCD300-PLG	*	FA1	*	FAE	*	FS1	*	
19					LAMBDA-TB	*	Q1TG	+					
20	6	6	3.45E-09	0.87280	CSCD300-PLG-LF	*	FA1	*	FAE	*	FS1	*	
21					LAMBDA-TB	*	Q1TG	+					
22	19	6	3.21E-09	0.89922	FA1	*	FAE	*	FS1	*	LAMBDA-TB	*	
23					Q1TG	*	SWVY02CC-FMS-LF	+					
24	15	7	2.98E-09	0.92368	EE-CST-LVL	*	FA1	*	FAE	*	FS1	*	
25					HCSF015C-VCC-LF	*	LAMBDA-TB	*	Q1TG	+			
26	14	6	2.98E-09	0.94814	FA1	*	FAE	*	FS1	*	HCSF004C-VCC-LF	*	
27					LAMBDA-TB	*	Q1TG	+					
28	20	6	2.98E-09	0.97260	FA1	*	FAE	*	FS1	*	LAMBDA-TB	*	
29					Q1TG	*	SWVY02CC-F-UUM	+					
30	8	6	1.25E-09	0.98288	FA1	*	FAE	*	FS1	*	LAMBDA-TB	*	
31					Q1TG	*	RLOSP	+					
32	9	6	5.00E-10	0.98699	FA1	*	FAE	*	FS1	*	HC001CB-BCO-LF	*	
33					LAMBDA-TB	*	Q1TG	+					
34	2	6	5.00E-10	0.99110	CCBC002-BCO-LF	*	FA1	*	FAE	*	FS1	*	
35					LAMBDA-TB	*	Q1TG	+					
36	16	6	4.29E-10	0.99462	FA1	*	FAE	*	FS1	*	LAMBDA-TB	*	
37					Q1TG	*	SWVB001X-BCO-LF	+					
38	1	6	4.29E-10	0.99814	1EB43C-BCO-LF	*	FA1	*	FAE	*	FS1	*	
39					LAMBDA-TB	*	Q1TG	+					

```
40      13   7  2.26E-10   1.00000      EE-CST-LVL       *  FA1            *  FAE            *  FS1            *
41                                      HCSD001X-STR     *  LAMBDA-TB      *  Q1TG           .

TEMAC RUN TIME IN CPU SECONDS      40.51
```

FIRE-E-S3 SEQUENCE

TOP EVENT FIRE-E-S3 CONTAINS 16 EVENTS IN 15 CUT SETS

THE FREQUENCY OF TOP EVENT FIRE-E-S3 IS 5.19E-07

DESCRIPTIVE STATISTICS FOR THE FREQUENCY OF TOP EVENT FIRE-E-S3

N	400
MEAN	5.06E-07
STD DEV	1.53E-06
LOWER 5%	6.94E-09
LOWER 25%	3.95E-08
MEDIAN	1.09E-07
UPPER 25%	3.56E-07
UPPER 5%	2.09E-06

90% UNCERTAINTY INTERVAL FOR TOP EVENT FREQUENCY (INNERMOST BRACKETS DENOTE INTERQUARTILE RANGE, ASTERISK DENOTES MEDIAN, N DENOTES NOMINAL VALUE AND M DENOTES MEAN)

NOMENCLATURE:

PD = PARTIAL DERIVATIVE

TEF = FREQUENCY OF THE TOP EVENT

EV(J) = PROBABILITY OF EVENT J FOR BASE EVENTS
= FREQUENCY OF EVENT J FOR INITIATING EVENTS

MEASURES:

1. FOR BASE EVENTS AND INITIATING EVENTS:

RISK REDUCTION = PD x EV(J)
= TEF - TEF(EVALUATED WITH EV(J) = 0)

2. FOR BASE EVENTS ONLY:

RISK INCREASE = PD - RISK REDUCTION
= PD x (1 - EV(J))
= TEF(EVALUATED WITH EV(J) = 1) - TEF

FIRE-E-S3 SEQUENCE
RISK REDUCTION BY BASE EVENT (WITH ASSOCIATED UNCERTAINTY INTERVALS)

BASE EVENT	OCCUR	PROB	(RANK)	RISK REDUCTION	(RANK)	LOWER 5%	UPPER 5%
FS1	15	1.70E-01	(4.0)	5.19E-07	(3.0)	6.94E-09	2.09E-06
FAE	15	3.80E-03	(9.0)	5.19E-07	(3.0)	6.94E-09	2.09E-06
LAMBDA-TB	15	3.70E-02	(7.0)	5.19E-07	(3.0)	6.94E-09	2.09E-06
FA1	15	3.00E-01	(3.0)	5.19E-07	(3.0)	6.94E-09	2.09E-06
Q1TG	15	8.30E-01	(1.0)	5.19E-07	(3.0)	6.94E-09	2.09E-06
SUR-007-V	1	8.70E-02	(6.0)	5.17E-07	(6.0)	6.91E-09	2.09E-06
CONT-LEAK	14	7.50E-01	(2.0)	1.94E-09	(7.0)	0.00E+00	5.31E-09
SUR-002-L	7	1.60E-01	(5.0)	1.81E-09	(8.0)	0.00E+00	5.31E-09
OPFAIL-VENT-2H	3	2.10E-03	(10.0)	5.81E-10	(9.0)	-2.52E-09	3.66E-09
SUR-027-R	7	1.80E-02	(8.0)	1.80E-10	(10.0)	0.00E+00	9.52E-11
1EB36YB-BCO-LF	2	7.20E-05	(13.5)	5.34E-11	(13.5)	0.00E+00	1.91E-10
1EB236B-BCO-LF	2	7.20E-05	(13.5)	5.34E-11	(13.5)	0.00E+00	1.91E-10
1EB36Y2X-BCO-LF	2	7.20E-05	(13.5)	5.34E-11	(13.5)	0.00E+00	1.91E-10
1EB35Y1X-BCO-LF	2	7.20E-05	(13.5)	5.34E-11	(13.5)	0.00E+00	1.91E-10
1EB235YA-BCO-LF	2	7.20E-05	(13.5)	5.34E-11	(13.5)	0.00E+00	1.91E-10
1EB235A-BCO-LF	2	7.20E-05	(13.5)	5.34E-11	(13.5)	0.00E+00	1.91E-10

FIRE-E-S3 SEQUENCE
RISK INCREASE BY BASE EVENT (WITH ASSOCIATED UNCERTAINTY INTERVALS)

BASE EVENT	OCCUR	PROB	(RANK)	RISK INCREASE	(RANK)	LOWER 5%	UPPER 5%
FAE	15	3.80E-03	(9.0)	1.36E-04	(1.0)	2.52E-06	5.02E-04
LAMBDA-TB	15	3.70E-02	(7.0)	1.35E-05	(2.0)	4.00E-07	5.45E-05
SUR-007-V	1	8.70E-02	(6.0)	5.42E-06	(3.0)	1.40E-07	1.65E-05
FS1	15	1.70E-01	(4.0)	2.53E-06	(4.0)	5.08E-08	8.29E-06
FA1	15	3.00E-01	(3.0)	1.21E-06	(5.0)	1.69E-08	4.81E-06
1EB235A-BCO-LF	2	7.20E-05	(13.5)	7.41E-07	(8.5)	0.00E+00	4.66E-06
1EB236B-BCO-LF	2	7.20E-05	(13.5)	7.41E-07	(8.5)	0.00E+00	4.66E-06
1EB36YB-BCO-LF	2	7.20E-05	(13.5)	7.41E-07	(8.5)	0.00E+00	4.66E-06
1EB36Y2X-BCO-LF	2	7.20E-05	(13.5)	7.41E-07	(8.5)	0.00E+00	4.66E-06
1EB35Y1X-BCO-LF	2	7.20E-05	(13.5)	7.41E-07	(8.5)	0.00E+00	4.66E-06
1EB235YA-BCO-LF	2	7.20E-05	(13.5)	7.41E-07	(8.5)	0.00E+00	4.66E-06
OPFAIL-VENT-2H	3	2.10E-03	(10.0)	2.76E-07	(12.0)	-1.60E-06	3.47E-06
Q1TG	15	8.30E-01	(1.0)	1.06E-07	(13.0)	3.27E-10	3.87E-07
SUR-027-R	7	1.80E-02	(8.0)	9.84E-09	(14.0)	2.84E-11	3.71E-08
SUR-002-L	7	1.60E-01	(5.0)	9.49E-09	(15.0)	0.00E+00	3.16E-08
CONT-LEAK	14	7.50E-01	(2.0)	6.47E-10	(16.0)	0.00E+00	2.86E-10

FIRE-E-S3 SEQUENCE
UNCERTAINTY IMPORTANCE BY BASE EVENT

BASE EVENT	OCCUR	PROB	(RANK)	% REDUCTION IN THE UNCERTAINTY OF LOG RISK	(RANK)	Y.05/TE.05*	Y.95/TE.95*
LAMBDA-TB	15	3.70E-02	(7.0)	28.4	(1.0)	2.18	1.09
SUR-007-V	1	8.70E-02	(6.0)	25.4	(2.0)	1.88	0.81
FA1	15	3.00E-01	(3.0)	17.8	(3.0)	1.28	1.00
FAE	15	3.80E-03	(9.0)	16.3	(4.0)	1.39	0.92
FS1	15	1.70E-01	(4.0)	15.8	(5.0)	1.53	0.86
SUR-027-R	7	1.80E-02	(8.0)	1.8	(6.0)	1.00	1.00
Q1TG	15	8.30E-01	(1.0)	1.6	(7.0)	1.00	1.02
CONT-LEAK	14	7.50E-01	(2.0)	0.1	(8.0)	1.00	1.00
SUR-002-L	7	1.60E-01	(5.0)	0.0	(12.5)		
OPFAIL-VENT-2H	3	2.10E-03	(10.0)	0.0	(12.5)		
1EB36YB-BCO-LF	2	7.20E-05	(13.5)	0.0	(12.5)		
1EB236B-BCO-LF	2	7.20E-05	(13.5)	0.0	(12.5)		
1EB36Y2X-BCO-LF	2	7.20E-05	(13.5)	0.0	(12.5)		
1EB35Y1X-BCO-LF	2	7.20E-05	(13.5)	0.0	(12.5)		
1EB235YA-BCO-LF	2	7.20E-05	(13.5)	0.0	(12.5)		
1EB235A-BCO-LF	2	7.20E-05	(13.5)	0.0	(12.5)		

FIRE-E-S3 SEQUENCE

CUT SET NUMBERS, CUT SET ORDERS, CUT SET FREQUENCIES,
CUMULATIVE NORMALIZED CUT SET FREQUENCIES AND CUT SETS
FOR TOP EVENT FIRE-E-S3 WITH TOP EVENT FREQUENCY 5.19E-07

(THE FIRST COLUMN OF NUMBERS IS THE LINE NUMBERS FOR THE FILE TEMACSETS.DNF)

2	15	7	5.17E-07	0.99617	FA1	*	FAE	*	FS1	*	LAMBDA-TB	*
3					/OPFAIL-VENT-2H	*	Q1TG	*	SUR-007-V	+		
4	7	8	1.50E-09	0.99906	CONT-LEAK	*	FA1	*	FAE	*	FS1	*
5					LAMBDA-TB	*	OPFAIL-VENT-2H	*	Q1TG	*	SUR-002-L	+
6	14	8	1.69E-10	0.99938	CONT-LEAK	*	FA1	*	FAE	*	FS1	*
7					LAMBDA-TB	*	OPFAIL-VENT-2H	*	Q1TG	*	SUR-027-R	+
8	6	8	5.14E-11	0.99948	1EB36Y2X-BCO-LF	*	CONT-LEAK	*	FA1	*	FAE	*
9					FS1	*	LAMBDA-TB	*	Q1TG	*	SUR-002-L	+
10	5	8	5.14E-11	0.99958	1EB235YA-BCO-LF	*	CONT-LEAK	*	FA1	*	FAE	*
11					FS1	*	LAMBDA-TB	*	Q1TG	*	SUR-002-L	+
12	4	8	5.14E-11	0.99968	1EB35Y1X-BCO-LF	*	CONT-LEAK	*	FA1	*	FAE	*
13					FS1	*	LAMBDA-TB	*	Q1TG	*	SUR-002-L	+
14	1	8	5.14E-11	0.99978	1EB235A-BCO-LF	*	CONT-LEAK	*	FA1	*	FAE	*
15					FS1	*	LAMBDA-TB	*	Q1TG	*	SUR-002-L	+
16	2	8	5.14E-11	0.99988	1EB236B-BCO-LF	*	CONT-LEAK	*	FA1	*	FAE	*
17					FS1	*	LAMBDA-TB	*	Q1TG	*	SUR-002-L	+
18	3	8	5.14E-11	0.99998	1EB36YB-BCO-LF	*	CONT-LEAK	*	FA1	*	FAE	*
19					FS1	*	LAMBDA-TB	*	Q1TG	*	SUR-002-L	+
20	13	8	1.93E-12	0.99998	1EB36Y2X-BCO-LF	*	/CONT-LEAK	*	FA1	*	FAE	*
21					FS1	*	LAMBDA-TB	*	Q1TG	*	SUR-027-R	+
22	12	8	1.93E-12	0.99999	1EB235YA-BCO-LF	*	/CONT-LEAK	*	FA1	*	FAE	*
23					FS1	*	LAMBDA-TB	*	Q1TG	*	SUR-027-R	+
24	11	8	1.93E-12	0.99999	1EB35Y1X-BCO-LF	*	/CONT-LEAK	*	FA1	*	FAE	*
25					FS1	*	LAMBDA-TB	*	Q1TG	*	SUR-027-R	+
26	10	8	1.93E-12	0.99999	1EB36YB-BCO-LF	*	/CONT-LEAK	*	FA1	*	FAE	*
27					FS1	*	LAMBDA-TB	*	Q1TG	*	SUR-027-R	+
28	9	8	1.93E-12	1.00000	1EB236B-BCO-LF	*	/CONT-LEAK	*	FA1	*	FAE	*
29					FS1	*	LAMBDA-TB	*	Q1TG	*	SUR-027-R	+
30	8	8	1.93E-12	1.00000	1EB235A-BCO-LF	*	/CONT-LEAK	*	FA1	*	FAE	*
31					FS1	*	LAMBDA-TB	*	Q1TG	*	SUR-027-R	.

TEMAC RUN TIME IN CPU SECONDS 35.04

FIRE-N SEQUENCE

TOP EVENT FIRE-N CONTAINS 70 EVENTS IN 114 CUT SETS

THE FREQUENCY OF TOP EVENT FIRE-N IS 8.61E-08

DESCRIPTIVE STATISTICS FOR THE FREQUENCY OF TOP EVENT FIRE-N

N	400
MEAN	1.63E-07
STD DEV	1.69E-06
LOWER 5%	0.00E+00
LOWER 25%	0.00E+00
MEDIAN	0.00E+00
UPPER 25%	3.16E-15
UPPER 5%	9.25E-08

90% UNCERTAINTY INTERVAL FOR TOP EVENT FREQUENCY (INNERMOST BRACKETS DENOTE INTERQUARTILE RANGE, ASTERISK DENOTES MEDIAN, N DENOTES NOMINAL VALUE AND M DENOTES MEAN)

NOMENCLATURE:

PD = PARTIAL DERIVATIVE

TEF = FREQUENCY OF THE TOP EVENT

EV(J) = PROBABILITY OF EVENT J FOR BASE EVENTS
= FREQUENCY OF EVENT J FOR INITIATING EVENTS

MEASURES:

1. FOR BASE EVENTS AND INITIATING EVENTS:

RISK REDUCTION = PD x EV(J)
= TEF - TEF(EVALUATED WITH EV(J) = 0)

2. FOR BASE EVENTS ONLY:

RISK INCREASE = PD - RISK REDUCTION
= PD x (1 - EV(J))
= TEF(EVALUATED WITH EV(J) = 1) - TEF

FIRE-N SEQUENCE
RISK REDUCTION BY BASE EVENT (WITH ASSOCIATED UNCERTAINTY INTERVALS)

BASE EVENT	OCCUR	PROB	(RANK)	RISK REDUCTION	(RANK)	LOWER 5%	UPPER 5%
QWS	114	3.80E-02	(10.0)	8.61E-08	(3.0)	0.00E+00	9.25E-08
Q2TG	114	9.90E-01	(4.0)	8.61E-08	(3.0)	0.00E+00	9.25E-08
LAMBDA-CSR	114	1.00E-02	(13.0)	8.61E-08	(3.0)	0.00E+00	9.25E-08
FS2	114	3.00E-01	(6.0)	8.61E-08	(3.0)	0.00E+00	9.25E-08
FA2	114	1.50E-01	(8.0)	8.61E-08	(3.0)	0.00E+00	9.25E-08
SUR-002-L	57	1.60E-01	(7.0)	8.30E-08	(6.0)	0.00E+00	5.13E-08
CONT-LEAK	114	7.50E-01	(5.0)	7.36E-08	(7.0)	0.00E+00	5.13E-08
RHRH01AX-HTX-LFB	2	6.20E-03	(14.0)	1.31E-08	(8.0)	0.00E+00	7.37E-09
SCSF06AA-DENER	8	1.00E+00	(2.0)	8.22E-09	(9.0)		
RHRC02AA-P-UUM	2	3.00E-03	(16.5)	6.32E-09	(11.5)	0.00E+00	5.99E-09
LCSC002A-P-UUM	2	3.00E-03	(16.5)	6.32E-09	(11.5)	0.00E+00	5.99E-09
RHRC02AA-P-NDUUM	2	3.00E-03	(16.5)	6.32E-09	(11.5)	0.00E+00	6.06E-09
CODG01P-P-UUM	2	3.00E-03	(16.5)	6.32E-09	(11.5)	0.00E+00	6.06E-09
RHRB01AA-BOO-CC	2	2.50E-03	(21.5)	5.27E-09	(15.0)	0.00E+00	3.07E-09
NWVY01CA-FMS-CC	2	2.50E-03	(21.5)	5.27E-09	(15.0)	0.00E+00	3.07E-09
CODG01P-PMS-CC	2	2.50E-03	(21.5)	5.27E-09	(15.0)	0.00E+00	3.07E-09
SUR-027-R	57	1.80E-02	(12.0)	3.11E-09	(17.0)	0.00E+00	3.04E-09
CSCD300A-PLG-LF	2	1.20E-03	(25.0)	2.53E-09	(18.0)	0.00E+00	8.57E-10
CODG01P-PMS-LF	2	1.10E-03	(26.5)	2.32E-09	(19.5)	0.00E+00	2.95E-09
RHRC02AA-PMS-LF	2	1.10E-03	(26.5)	2.32E-09	(19.5)	0.00E+00	2.95E-09
NWVY01AX-ACX-LFI	2	8.40E-04	(28.0)	1.77E-09	(21.0)	0.00E+00	1.01E-09
FLOW-RHR-A3	6	1.00E+00	(2.0)	1.74E-09	(22.0)		
EE-CSCD300A-PLG	2	7.20E-04	(29.0)	1.52E-09	(23.0)	0.00E+00	1.13E-09
CODG01F-PLG-LF	2	5.80E-04	(30.0)	1.22E-09	(24.0)	0.00E+00	4.86E-10
NWVY01CA-FMS-LF	2	5.40E-04	(31.0)	1.14E-09	(25.0)	0.00E+00	8.99E-10
RHRB01AA-BOO-LF	2	5.00E-04	(33.5)	1.05E-09	(27.5)	0.00E+00	4.47E-10
CSCF068A-VCC-LF	2	5.00E-04	(33.5)	1.05E-09	(27.5)	0.00E+00	7.06E-10
NWVY01CA-F-UUM	2	5.00E-04	(33.5)	1.05E-09	(27.5)	0.00E+00	1.21E-09
RHRF48AA-VOO-LF	2	5.00E-04	(33.5)	1.05E-09	(27.5)	0.00E+00	7.06E-10
RHRF87AA-V-UUM	2	3.00E-04	(44.0)	6.32E-10	(38.0)	0.00E+00	5.09E-10
RHRF65AA-N-UUM	2	3.00E-04	(44.0)	6.32E-10	(38.0)	0.00E+00	5.09E-10
RHRF60AA-S-UUM	2	3.00E-04	(44.0)	6.32E-10	(38.0)	0.00E+00	5.09E-10
RHRF51AA-N-UUM	2	3.00E-04	(44.0)	6.32E-10	(38.0)	0.00E+00	5.09E-10
RHRF88AX-R-UUM	2	3.00E-04	(44.0)	6.32E-10	(38.0)	0.00E+00	5.09E-10
RHRF48AA-V-UUM	2	3.00E-04	(44.0)	6.32E-10	(38.0)	0.00E+00	5.09E-10
RHRF47AA-V-UUM	2	3.00E-04	(44.0)	6.32E-10	(38.0)	0.00E+00	5.09E-10
RHRF64AA-V-UUM	2	3.00E-04	(44.0)	6.32E-10	(38.0)	0.00E+00	5.09E-10
RHRF55AX-R-UUM	2	3.00E-04	(44.0)	6.32E-10	(38.0)	0.00E+00	5.09E-10
CODG01F-S-UUM	2	3.00E-04	(44.0)	6.32E-10	(38.0)	0.00E+00	2.30E-10
PC02AAAX-AOO-LFO	2	3.00E-04	(44.0)	6.32E-10	(38.0)	0.00E+00	3.56E-10

CSCF008A-V-UUM	2	3.00E-04 (44.0)	6.32E-10 (38.0)	0.00E+00	5.09E-10
CSCD300A-S-UUM	2	3.00E-04 (44.0)	6.32E-10 (38.0)	0.00E+00	2.30E-10
SCSF06AA-V-UUM	2	3.00E-04 (44.0)	6.32E-10 (38.0)	0.00E+00	5.09E-10
NWVY01AX-A-UUM	2	3.00E-04 (44.0)	6.32E-10 (38.0)	0.00E+00	2.30E-10
RHRH01AX-H-UUM	2	3.00E-04 (44.0)	6.32E-10 (38.0)	0.00E+00	2.30E-10
RHRF74AA-V-UUM	2	3.00E-04 (44.0)	6.32E-10 (38.0)	0.00E+00	5.09E-10
LPCI-PMS-CM	2	2.50E-03 (21.5)	5.80E-10 (47.5)	0.00E+00	2.51E-10
LPCI-BETA	2	1.10E-01 (9.0)	5.80E-10 (47.5)	0.00E+00	2.51E-10
NOFLOW-RHR-A1	4	1.00E+00 (2.0)	4.64E-10 (49.0)		
LPCI-MOV-BETA	4	3.00E-02 (11.0)	3.16E-10 (50.0)	0.00E+00	1.01E-10
RHRF47AA-VOC-LF	2	1.10E-04 (55.0)	2.32E-10 (53.0)	0.00E+00	2.85E-10
RHRF04AA-VOC-LF	2	1.10E-04 (55.0)	2.32E-10 (53.0)	0.00E+00	2.85E-10
RHRF03AA-VOC-LF	2	1.10E-04 (55.0)	2.32E-10 (53.0)	0.00E+00	2.85E-10
RHR301AX-STR	2	1.10E-04 (55.0)	2.32E-10 (53.0)	0.00E+00	2.44E-10
RHRF98AX-XOC-LF	2	1.10E-04 (55.0)	2.32E-10 (53.0)	0.00E+00	2.85E-10
RHRF31AX-CCC-LF	2	1.00E-04 (58.5)	2.11E-10 (56.5)	0.00E+00	2.29E-10
C0DG002-CCC-LF	2	1.00E-04 (58.5)	2.11E-10 (56.5)	0.00E+00	2.29E-10
CCBF068A-BCO-LF	2	8.40E-05 (61.0)	1.77E-10 (59.0)	0.00E+00	1.20E-10
CCB0DG1P-BCO-LF	2	8.40E-05 (61.0)	1.77E-10 (59.0)	0.00E+00	1.20E-10
1EB16211-BCO	2	8.40E-05 (61.0)	1.77E-10 (59.0)	0.00E+00	1.20E-10
LPCI-MOV-CM2	2	2.50E-03 (21.5)	1.58E-10 (61.5)	0.00E+00	5.07E-11
LPCI-MOV-CM1	2	2.50E-03 (21.5)	1.58E-10 (61.5)	0.00E+00	5.07E-11
1EB35Y2X-BCO-LF	2	7.20E-05 (66.0)	1.52E-10 (66.0)	0.00E+00	1.16E-10
1EB235YA-BCO-LF	2	7.20E-05 (66.0)	1.52E-10 (66.0)	0.00E+00	1.16E-10
1EB211YX-BCO-LF	2	7.20E-05 (66.0)	1.52E-10 (66.0)	0.00E+00	1.16E-10
1EB235XA-BCO-LF	2	7.20E-05 (66.0)	1.52E-10 (66.0)	0.00E+00	1.16E-10
1EB1Y22X-BCO	2	7.20E-05 (66.0)	1.52E-10 (66.0)	0.00E+00	1.16E-10
NWVB001X-BCO-LF	2	7.20E-05 (66.0)	1.52E-10 (66.0)	0.00E+00	1.16E-10
1EB235A-BCO-LF	2	7.20E-05 (66.0)	1.52E-10 (66.0)	0.00E+00	1.16E-10
RHRB03AX-BCO-LF	2	2.40E-05 (70.0)	5.06E-11 (70.0)	0.00E+00	3.32E-11

FIRE-N SEQUENCE
RISK INCREASE BY BASE EVENT (WITH ASSOCIATED UNCERTAINTY INTERVALS)

BASE EVENT	OCCUR	PROB	(RANK)	RISK INCREASE	(RANK)	LOWER 5%	UPPER 5%
LAMBDA-CSR	114	1.00E-02	(13.0)	8.52E-06	(1.0)	0.00E+00	5.85E-05
QWS	114	3.80E-02	(10.0)	2.18E-06	(2.0)	0.00E+00	2.52E-06
RHRB03AX-BCO-LF	2	2.40E-05	(70.0)	2.11E-06	(3.0)	0.00E+00	1.75E-06
1EB235A-BCO-LF	2	7.20E-05	(66.0)	2.11E-06	(7.0)	0.00E+00	1.75E-06
NWVB001X-BCO-LF	2	7.20E-05	(66.0)	2.11E-06	(7.0)	0.00E+00	1.75E-06
1EB235XA-BCO-LF	2	7.20E-05	(66.0)	2.11E-06	(7.0)	0.00E+00	1.75E-06
1EB35Y2X-BCO-LF	2	7.20E-05	(66.0)	2.11E-06	(7.0)	0.00E+00	1.75E-06
1EB211YX-BCO-LF	2	7.20E-05	(66.0)	2.11E-06	(7.0)	0.00E+00	1.75E-06
1EB1Y22X-BCO	2	7.20E-05	(66.0)	2.11E-06	(7.0)	0.00E+00	1.75E-06
1EB235YA-BCO-LF	2	7.20E-05	(66.0)	2.11E-06	(7.0)	0.00E+00	1.75E-06
1EB16211-BCO	2	8.40E-05	(61.0)	2.11E-06	(12.0)	0.00E+00	1.75E-06
CCBF068A-BCO-LF	2	8.40E-05	(61.0)	2.11E-06	(12.0)	0.00E+00	1.75E-06
CCB0DG1P-BCO-LF	2	8.40E-05	(61.0)	2.11E-06	(12.0)	0.00E+00	1.75E-06
C0DG002-CCC-LF	2	1.00E-04	(58.5)	2.11E-06	(14.5)	0.00E+00	1.75E-06
RHRF31AX-CCC-LF	2	1.00E-04	(58.5)	2.11E-06	(14.5)	0.00E+00	1.75E-06
RHRF04AA-VOC-LF	2	1.10E-04	(55.0)	2.11E-06	(18.0)	0.00E+00	1.75E-06
RHRF03AA-VOC-LF	2	1.10E-04	(55.0)	2.11E-06	(18.0)	0.00E+00	1.75E-06
RHRF47AA-VOC-LF	2	1.10E-04	(55.0)	2.11E-06	(18.0)	0.00E+00	1.75E-06
RHR301AX-STR	2	1.10E-04	(55.0)	2.11E-06	(18.0)	0.00E+00	1.75E-06
RHRF98AX-XOC-LF	2	1.10E-04	(55.0)	2.11E-06	(18.0)	0.00E+00	1.75E-06
RHRF65AA-N-UUM	2	3.00E-04	(44.0)	2.11E-06	(29.0)	0.00E+00	1.75E-06
RHRF55AX-R-UUM	2	3.00E-04	(44.0)	2.11E-06	(29.0)	0.00E+00	1.75E-06
RHRF51AA-N-UUM	2	3.00E-04	(44.0)	2.11E-06	(29.0)	0.00E+00	1.75E-06
RHRF47AA-V-UUM	2	3.00E-04	(44.0)	2.11E-06	(29.0)	0.00E+00	1.75E-06
RHRF64AA-V-UUM	2	3.00E-04	(44.0)	2.11E-06	(29.0)	0.00E+00	1.75E-06
PC02AAAX-AOO-LFO	2	3.00E-04	(44.0)	2.11E-06	(29.0)	0.00E+00	1.75E-06
NWVY01AX-A-UUM	2	3.00E-04	(44.0)	2.11E-06	(29.0)	0.00E+00	1.75E-06
RHRF60AA-S-UUM	2	3.00E-04	(44.0)	2.11E-06	(29.0)	0.00E+00	1.75E-06
RHRF74AA-V-UUM	2	3.00E-04	(44.0)	2.11E-06	(29.0)	0.00E+00	1.75E-06
RHRF87AA-V-UUM	2	3.00E-04	(44.0)	2.11E-06	(29.0)	0.00E+00	1.75E-06
RHRF88AX-R-UUM	2	3.00E-04	(44.0)	2.11E-06	(29.0)	0.00E+00	1.75E-06
C0DG01F-S-UUM	2	3.00E-04	(44.0)	2.11E-06	(29.0)	0.00E+00	1.75E-06
CSCF008A-V-UUM	2	3.00E-04	(44.0)	2.11E-06	(29.0)	0.00E+00	1.75E-06
CSCD300A-S-UUM	2	3.00E-04	(44.0)	2.11E-06	(29.0)	0.00E+00	1.75E-06
SCSF06AA-V-UUM	2	3.00E-04	(44.0)	2.11E-06	(29.0)	0.00E+00	1.75E-06
RHRH01AX-H-UUM	2	3.00E-04	(44.0)	2.11E-06	(29.0)	0.00E+00	1.75E-06
RHRF48AA-V-UUM	2	3.00E-04	(44.0)	2.11E-06	(29.0)	0.00E+00	1.75E-06
RHRF48AA-VOO-LF	2	5.00E-04	(33.5)	2.11E-06	(39.5)	0.00E+00	1.75E-06
RHRB01AA-BOO-LF	2	5.00E-04	(33.5)	2.11E-06	(39.5)	0.00E+00	1.75E-06
CSCF068A-VCC-LF	2	5.00E-04	(33.5)	2.11E-06	(39.5)	0.00E+00	1.75E-06

NWVY01CA-F-UUM	2	5.00E-04	(33.5)	2.11E-06	(39.5)	0.00E+00	1.75E-06
NWVY01CA-FMS-LF	2	5.40E-04	(31.0)	2.11E-06	(42.0)	0.00E+00	1.75E-06
C0DG01F-PLG-LF	2	5.80E-04	(30.0)	2.11E-06	(43.0)	0.00E+00	1.75E-06
EE-CSCD300A-PLG	2	7.20E-04	(29.0)	2.11E-06	(44.0)	0.00E+00	1.75E-06
NWVY01AX-ACX-LFI	2	8.40E-04	(28.0)	2.11E-06	(45.0)	0.00E+00	1.75E-06
C0DG01P-PMS-LF	2	1.10E-03	(26.5)	2.11E-06	(46.5)	0.00E+00	1.75E-06
RHRC02AA-PMS-LF	2	1.10E-03	(26.5)	2.11E-06	(46.5)	0.00E+00	1.75E-06
CSCD300A-PLG-LF	2	1.20E-03	(25.0)	2.11E-06	(48.0)	0.00E+00	1.75E-06
C0DG01P-PMS-CC	2	2.50E-03	(21.5)	2.10E-06	(50.0)	0.00E+00	1.75E-06
RHRB01AA-BOO-CC	2	2.50E-03	(21.5)	2.10E-06	(50.0)	0.00E+00	1.75E-06
NWVY01CA-FMS-CC	2	2.50E-03	(21.5)	2.10E-06	(50.0)	0.00E+00	1.75E-06
LCSC002A-P-UUM	2	3.00E-03	(16.5)	2.10E-06	(53.5)	0.00E+00	1.75E-06
RHRC02AA-P-UUM	2	3.00E-03	(16.5)	2.10E-06	(53.5)	0.00E+00	1.75E-06
RHRC02AA-P-NDUUM	2	3.00E-03	(16.5)	2.10E-06	(53.5)	0.00E+00	1.75E-06
C0DG01P-P-UUM	2	3.00E-03	(16.5)	2.10E-06	(53.5)	0.00E+00	1.75E-06
RHRH01AX-HTX-LFB	2	6.20E-03	(14.0)	2.09E-06	(56.0)	0.00E+00	1.75E-06
FA2	114	1.50E-01	(8.0)	4.88E-07	(57.0)	0.00E+00	8.93E-07
SUR-002-L	57	1.60E-01	(7.0)	4.36E-07	(58.0)	0.00E+00	1.04E-06
LPCI-PMS-CM	2	2.50E-03	(21.5)	2.31E-07	(59.0)	0.00E+00	2.25E-07
FS2	114	3.00E-01	(6.0)	2.01E-07	(60.0)	0.00E+00	1.89E-07
SUR-027-R	57	1.80E-02	(12.0)	1.70E-07	(61.0)	0.00E+00	1.19E-07
LPCI-MOV-CM2	2	2.50E-03	(21.5)	6.31E-08	(62.5)	0.00E+00	6.15E-08
LPCI-MOV-CM1	2	2.50E-03	(21.5)	6.31E-08	(62.5)	0.00E+00	6.15E-08
CONT-LEAK	114	7.50E-01	(5.0)	2.45E-08	(64.0)	-3.04E-09	0.00E+00
LPCI-MOV-BETA	4	3.00E-02	(11.0)	1.02E-08	(65.0)	0.00E+00	6.06E-09
LPCI-BETA	2	1.10E-01	(9.0)	4.69E-09	(66.0)	0.00E+00	2.68E-09
Q2TG	114	9.90E-01	(4.0)	8.69E-10	(67.0)	0.00E+00	9.36E-10
FLOW-RHR-A3	6	1.00E+00	(2.0)	0.00E+00	(69.0)		
SCSF06AA-DENER	8	1.00E+00	(2.0)	0.00E+00	(69.0)		
NOFLOW-RHR-A1	4	1.00E+00	(2.0)	0.00E+00	(69.0)		

FIRE-N SEQUENCE
UNCERTAINTY IMPORTANCE BY BASE EVENT

BASE EVENT	OCCUR	PROB	(RANK)	% REDUCTION IN THE UNCERTAINTY OF LOG RISK	(RANK)	Y.05/TE.05*	Y.95/TE.95*
LAMBDA-CSR	114	1.00E-02	(13.0)	33.8	(1.0)	NA	6.71
SUR-027-R	57	1.80E-02	(12.0)	10.6	(2.0)	NA	0.74
CONT-LEAK	114	7.50E-01	(5.0)	8.0	(3.0)	NA	0.49
SUR-002-L	57	1.60E-01	(7.0)	2.7	(4.0)	NA	2.88
C0DG01P-P-UUM	2	3.00E-03	(16.5)	2.1	(5.5)	NA	0.76
RHRC02AA-P-NDUUM	2	3.00E-03	(16.5)	2.1	(5.5)	NA	0.76
RHRF48AA-VOO-LF	2	5.00E-04	(33.5)	1.6	(7.5)	NA	1.02
CSCF068A-VCC-LF	2	5.00E-04	(33.5)	1.6	(7.5)	NA	1.02
RHRF03AA-VOC-LF	2	1.10E-04	(55.0)	1.6	(10.5)	NA	0.98
RHRF04AA-VOC-LF	2	1.10E-04	(55.0)	1.6	(10.5)	NA	0.98
RHRF47AA-VOC-LF	2	1.10E-04	(55.0)	1.6	(10.5)	NA	0.98
RHRF98AX-XOC-LF	2	1.10E-04	(55.0)	1.6	(10.5)	NA	0.98
NWVY01CA-FMS-LF	2	5.40E-04	(31.0)	1.4	(13.0)	NA	1.00
CSCD300A-PLG-LF	2	1.20E-03	(25.0)	1.4	(14.0)	NA	1.03
PC02AAAX-AOO-LFO	2	3.00E-04	(44.0)	1.3	(15.0)	NA	1.01
C0DG01F-PLG-LF	2	5.80E-04	(30.0)	1.3	(16.0)	NA	1.01
LPCI-BETA	2	1.10E-01	(9.0)	1.3	(17.0)	NA	1.00
NWVY01CA-F-UUM	2	5.00E-04	(33.5)	1.2	(18.0)	NA	1.00
RHRB01AA-BOO-LF	2	5.00E-04	(33.5)	1.2	(19.0)	NA	0.99
RHRF48AA-V-UUM	2	3.00E-04	(44.0)	1.2	(25.5)	NA	1.05
RHRF64AA-V-UUM	2	3.00E-04	(44.0)	1.2	(25.5)	NA	1.05
RHRF55AX-R-UUM	2	3.00E-04	(44.0)	1.2	(25.5)	NA	1.05
RHRF51AA-N-UUM	2	3.00E-04	(44.0)	1.2	(25.5)	NA	1.05
RHRF47AA-V-UUM	2	3.00E-04	(44.0)	1.2	(25.5)	NA	1.05
RHRF60AA-S-UUM	2	3.00E-04	(44.0)	1.2	(25.5)	NA	1.05
CSCF008A-V-UUM	2	3.00E-04	(44.0)	1.2	(25.5)	NA	1.05
RHRF74AA-V-UUM	2	3.00E-04	(44.0)	1.2	(25.5)	NA	1.05
RHRF65AA-N-UUM	2	3.00E-04	(44.0)	1.2	(25.5)	NA	1.05
SCSF06AA-V-UUM	2	3.00E-04	(44.0)	1.2	(25.5)	NA	1.05
RHRF88AX-R-UUM	2	3.00E-04	(44.0)	1.2	(25.5)	NA	1.05
RHRF87AA-V-UUM	2	3.00E-04	(44.0)	1.2	(25.5)	NA	1.05
EE-CSCD300A-PLG	2	7.20E-04	(29.0)	1.1	(32.0)	NA	1.01
LPCI-PMS-CM	2	2.50E-03	(21.5)	1.1	(35.5)	NA	1.03
LPCI-MOV-CM2	2	2.50E-03	(21.5)	1.1	(35.5)	NA	1.03
LPCI-MOV-CM1	2	2.50E-03	(21.5)	1.1	(35.5)	NA	1.03
C0DG01P-PMS-CC	2	2.50E-03	(21.5)	1.1	(35.5)	NA	1.03
RHRB01AA-BOO-CC	2	2.50E-03	(21.5)	1.1	(35.5)	NA	1.03
NWVY01CA-FMS-CC	2	2.50E-03	(21.5)	1.1	(35.5)	NA	1.03
C0DG01P-PMS-LF	2	1.10E-03	(26.5)	1.0	(39.5)	NA	0.88
RHRC02AA-PMS-LF	2	1.10E-03	(26.5)	1.0	(39.5)	NA	0.88

FS2	114	3.00E-01 (6.0)	1.0	(41.0)	NA	0.91
LPCI-MOV-BETA	4	3.00E-02 (11.0)	0.9	(42.0)	NA	1.00
Q2TG	114	9.90E-01 (4.0)	0.9	(43.0)	NA	1.00
CCBF068A-BCO-LF	2	8.40E-05 (61.0)	0.0	(55.5)		
CCB0DG1P-BCO-LF	2	8.40E-05 (61.0)	0.0	(55.5)		
1EB35Y2X-BCO-LF	2	7.20E-05 (66.0)	0.0	(55.5)		
LCSC002A-P-UUM	2	3.00E-03 (16.5)	0.0	(55.5)		
RHRF31AX-CCC-LF	2	1.00E-04 (58.5)	0.0	(55.5)		
1EB235YA-BCO-LF	2	7.20E-05 (66.0)	0.0	(55.5)		
1EB211YX-BCO-LF	2	7.20E-05 (66.0)	0.0	(55.5)		
RHRC02AA-P-UUM	2	3.00E-03 (16.5)	0.0	(55.5)		
RHRB03AX-BCO-LF	2	2.40E-05 (70.0)	0.0	(55.5)		
FA2	114	1.50E-01 (8.0)	0.0	(55.5)		
1EB235XA-BCO-LF	2	7.20E-05 (66.0)	0.0	(55.5)		
RHR301AX-STR	2	1.10E-04 (55.0)	0.0	(55.5)		
QWS	114	3.80E-02 (10.0)	0.0	(55.5)		
C0DG01F-S-UUM	2	3.00E-04 (44.0)	0.0	(55.5)		
CSCD300A-S-UUM	2	3.00E-04 (44.0)	0.0	(55.5)		
NWVY01AX-ACX-LFI	2	8.40E-04 (28.0)	0.0	(55.5)		
NWVY01AX-A-UUM	2	3.00E-04 (44.0)	0.0	(55.5)		
RHRH01AX-HTX-LFB	2	6.20E-03 (14.0)	0.0	(55.5)		
C0DG002-CCC-LF	2	1.00E-04 (58.5)	0.0	(55.5)		
RHRH01AX-H-UUM	2	3.00E-04 (44.0)	0.0	(55.5)		
1EB235A-BCO-LF	2	7.20E-05 (66.0)	0.0	(55.5)		
1EB1Y22X-BCO	2	7.20E-05 (66.0)	0.0	(55.5)		
NWVB001X-BCO-LF	2	7.20E-05 (66.0)	0.0	(55.5)		
1EB16211-BCO	2	8.40E-05 (61.0)	0.0	(55.5)		
FLOW-RHR-A3	6	1.00E+00 (2.0)				
SCSF06AA-DENER	8	1.00E+00 (2.0)				
NOFLOW-RHR-A1	4	1.00E+00 (2.0)				

FIRE-N SEQUENCE

CUT SET NUMBERS, CUT SET ORDERS, CUT SET FREQUENCIES,
CUMULATIVE NORMALIZED CUT SET FREQUENCIES AND CUT SETS
FOR TOP EVENT FIRE-N WITH TOP EVENT FREQUENCY 8.61E-08

(THE FIRST COLUMN OF NUMBERS IS THE LINE NUMBERS FOR THE FILE TEMACSETS.DNF)

2	1	8	1.26E-08	0.14634	CONT-LEAK	*	FA2	*	FS2	*	LAMBDA-CSR	*
3					Q2TG	*	QWS	*	RHRH01AX-HTX-LFB	*	SUR-002-L	+
4	10	8	6.09E-09	0.21715	C0DG01P-P-UUM	*	CONT-LEAK	*	FA2	*	FS2	*
5					LAMBDA-CSR	*	Q2TG	*	QWS	*	SUR-002-L	+
6	55	8	6.09E-09	0.28796	CONT-LEAK	*	FA2	*	FS2	*	LAMBDA-CSR	*
7					LCSC002A-P-UUM	*	Q2TG	*	QWS	*	SUR-002-L	+
8	25	9	6.09E-09	0.35878	CONT-LEAK	*	FA2	*	FS2	*	LAMBDA-CSR	*
9					Q2TG	*	QWS	*	RHRC02AA-P-UUM	*	SCSF06AA-DENER	*
10					SUR-002-L	+						
11	3	8	6.09E-09	0.42959	CONT-LEAK	*	FA2	*	FS2	*	LAMBDA-CSR	*
12					Q2TG	*	QWS	*	RHRC02AA-P-NDUUM	*	SUR-002-L	+
13	27	8	5.08E-09	0.48860	C0DG01P-PMS-CC	*	CONT-LEAK	*	FA2	*	FS2	*
14					LAMBDA-CSR	*	Q2TG	*	QWS	*	SUR-002-L	+
15	19	8	5.08E-09	0.54761	CONT-LEAK	*	FA2	*	FS2	*	LAMBDA-CSR	*
16					NWVY01CA-FMS-CC	*	Q2TG	*	QWS	*	SUR-002-L	+
17	18	8	5.08E-09	0.60661	CONT-LEAK	*	FA2	*	FS2	*	LAMBDA-CSR	*
18					Q2TG	*	QWS	*	RHRB01AA-BOO-CC	*	SUR-002-L	+
19	56	8	2.44E-09	0.63494	CONT-LEAK	*	CSCD300A-PLG-LF	*	FA2	*	FS2	*
20					LAMBDA-CSR	*	Q2TG	*	QWS	*	SUR-002-L	+
21	54	8	2.23E-09	0.66090	C0DG01P-PMS-LF	*	CONT-LEAK	*	FA2	*	FS2	*
22					LAMBDA-CSR	*	Q2TG	*	QWS	*	SUR-002-L	+
23	16	8	2.23E-09	0.68687	CONT-LEAK	*	FA2	*	FS2	*	LAMBDA-CSR	*
24					Q2TG	*	QWS	*	RHRC02AA-PMS-LF	*	SUR-002-L	+
25	31	8	1.71E-09	0.70669	CONT-LEAK	*	FA2	*	FS2	*	LAMBDA-CSR	*
26					NWVY01AX-ACX-LFI	*	Q2TG	*	QWS	*	SUR-002-L	+
27	42	8	1.46E-09	0.72369	CONT-LEAK	*	EE-CSCD300A-PLG	*	FA2	*	FS2	*
28					LAMBDA-CSR	*	Q2TG	*	QWS	*	SUR-002-L	+
29	8	8	1.18E-09	0.73738	C0DG01F-PLG-LF	*	CONT-LEAK	*	FA2	*	FS2	*
30					LAMBDA-CSR	*	Q2TG	*	QWS	*	SUR-002-L	+
31	7	8	1.10E-09	0.75012	CONT-LEAK	*	FA2	*	FS2	*	LAMBDA-CSR	*
32					NWVY01CA-FMS-LF	*	Q2TG	*	QWS	*	SUR-002-L	+
33	37	8	1.02E-09	0.76193	CONT-LEAK	*	FA2	*	FS2	*	LAMBDA-CSR	*
34					NWVY01CA-F-UUM	*	Q2TG	*	QWS	*	SUR-002-L	+
35	20	8	1.02E-09	0.77373	CONT-LEAK	*	FA2	*	FS2	*	LAMBDA-CSR	*
36					Q2TG	*	QWS	*	RHRB01AA-BOO-LF	*	SUR-002-L	+
37	53	9	1.02E-09	0.78553	CONT-LEAK	*	FA2	*	FLOW-RHR-A3	*	FS2	*
38					LAMBDA-CSR	*	Q2TG	*	QWS	*	RHRF48AA-VOO-LF	*
39					SUR-002-L	+						

40	29	8	1.02E-09	0.79733	CONT-LEAK	*	CSCF068A-VCC-LF	*	FA2	*	FS2	*
41					LAMBDA-CSR	*	Q2TG	*	QWS	*	SUR-002-L	+
42	41	8	6.09E-10	0.80441	CONT-LEAK	*	FA2	*	FS2	*	LAMBDA-CSR	*
43					Q2TG	*	QWS	*	RHRF65AA-N-UUM	*	SUR-002-L	+
44	28	8	6.09E-10	0.81149	CONT-LEAK	*	FA2	*	FS2	*	LAMBDA-CSR	*
45					Q2TG	*	QWS	*	RHRF55AX-R-UUM	*	SUR-002-L	+
46	22	8	6.09E-10	0.81858	CONT-LEAK	*	FA2	*	FS2	*	LAMBDA-CSR	*
47					Q2TG	*	QWS	*	SCSF06AA-V-UUM	*	SUR-002-L	+
48	50	8	6.09E-10	0.82566	CONT-LEAK	*	FA2	*	FS2	*	LAMBDA-CSR	*
49					Q2TG	*	QWS	*	RHRF60AA-S-UUM	*	SUR-002-L	+
50	57	9	6.09E-10	0.83274	CONT-LEAK	*	FA2	*	FS2	*	LAMBDA-CSR	*
51					Q2TG	*	QWS	*	RHRF88AX-R-UUM	*	SCSF06AA-DENER	*
52					SUR-002-L	+						
53	4	8	6.09E-10	0.83982	CONT-LEAK	*	FA2	*	FS2	*	LAMBDA-CSR	*
54					Q2TG	*	QWS	*	RHRH01AX-H-UUM	*	SUR-002-L	+
55	51	8	6.09E-10	0.84690	CONT-LEAK	*	FA2	*	FS2	*	LAMBDA-CSR	*
56					Q2TG	*	QWS	*	RHRF51AA-N-UUM	*	SUR-002-L	+
57	52	9	6.09E-10	0.85398	CONT-LEAK	*	FA2	*	FS2	*	LAMBDA-CSR	*
58					Q2TG	*	QWS	*	RHRF47AA-V-UUM	*	SCSF06AA-DENER	*
59					SUR-002-L	+						
60	49	8	6.09E-10	0.86106	CONT-LEAK	*	FA2	*	FS2	*	LAMBDA-CSR	*
61					Q2TG	*	QWS	*	RHRF87AA-V-UUM	*	SUR-002-L	+
62	38	8	6.09E-10	0.86814	CONT-LEAK	*	FA2	*	FS2	*	LAMBDA-CSR	*
63					PC02AAAX-AOO-LFO	*	Q2TG	*	QWS	*	SUR-002-L	+
64	12	8	6.09E-10	0.87522	CONT-LEAK	*	CSCD300A-S-UUM	*	FA2	*	FS2	*
65					LAMBDA-CSR	*	Q2TG	*	QWS	*	SUR-002-L	+
66	14	9	6.09E-10	0.88231	CONT-LEAK	*	FA2	*	FS2	*	LAMBDA-CSR	*
67					Q2TG	*	QWS	*	RHRF64AA-V-UUM	*	SCSF06AA-DENER	*
68					SUR-002-L	+						
69	40	8	6.09E-10	0.88939	CONT-LEAK	*	FA2	*	FS2	*	LAMBDA-CSR	*
70					NWVY01AX-A-UUM	*	Q2TG	*	QWS	*	SUR-002-L	+
71	46	8	6.09E-10	0.89647	CONT-LEAK	*	CSCF008A-V-UUM	*	FA2	*	FS2	*
72					LAMBDA-CSR	*	Q2TG	*	QWS	*	SUR-002-L	+
73	36	8	6.09E-10	0.90355	C0DG01F-S-UUM	*	CONT-LEAK	*	FA2	*	FS2	*
74					LAMBDA-CSR	*	Q2TG	*	QWS	*	SUR-002-L	+
75	17	8	6.09E-10	0.91063	CONT-LEAK	*	FA2	*	FS2	*	LAMBDA-CSR	*
76					Q2TG	*	QWS	*	RHRF74AA-V-UUM	*	SUR-002-L	+
77	9	9	6.09E-10	0.91771	CONT-LEAK	*	FA2	*	FLOW-RHR-A3	*	FS2	*
78					LAMBDA-CSR	*	Q2TG	*	QWS	*	RHRF48AA-V-UUM	*
79					SUR-002-L	+						
80	43	9	5.59E-10	0.92420	CONT-LEAK	*	FA2	*	FS2	*	LAMBDA-CSR	*
81					LPCI-BETA	*	LPCI-PMS-CM	*	Q2TG	*	QWS	*
82					SUR-002-L	+						
83	58	8	4.72E-10	0.92969	/CONT-LEAK	*	FA2	*	FS2	*	LAMBDA-CSR	*
84					Q2TG	*	QWS	*	RHRH01AX-HTX-LFB	*	SUR-027-R	+
85	60	8	2.29E-10	0.93234	/CONT-LEAK	*	FA2	*	FS2	*	LAMBDA-CSR	*
86					Q2TG	*	QWS	*	RHRC02AA-P-NDUUM	*	SUR-027-R	+

87	82	9	2.29E-10	0.93500	/CONT-LEAK	*	FA2	*	FS2	*	LAMBDA-CSR	*
88					Q2TG	*	QWS	*	RHRC02AA-P-UUM	*	SCSF06AA-DENER	*
89					SUR-027-R	+						
90	112	8	2.29E-10	0.93766	/CONT-LEAK	*	FA2	*	FS2	*	LAMBDA-CSR	*
91					LCSC002A-P-UUM	*	Q2TG	*	QWS	*	SUR-027-R	+
92	67	8	2.29E-10	0.94031	C0DG01P-P-UUM	*	/CONT-LEAK	*	FA2	*	FS2	*
93					LAMBDA-CSR	*	Q2TG	*	QWS	*	SUR-027-R	+
94	24	9	2.23E-10	0.94291	CONT-LEAK	*	FA2	*	FS2	*	LAMBDA-CSR	*
95					NOFLOW-RHR-A1	*	Q2TG	*	QWS	*	RHRF04AA-VOC-LF	*
96					SUR-002-L	+						
97	6	9	2.23E-10	0.94550	CONT-LEAK	*	FA2	*	FS2	*	LAMBDA-CSR	*
98					NOFLOW-RHR-A1	*	Q2TG	*	QWS	*	RHR301AX-STR	*
99					SUR-002-L	+						
100	47	8	2.23E-10	0.94810	CONT-LEAK	*	FA2	*	FS2	*	LAMBDA-CSR	*
101					Q2TG	*	QWS	*	RHRF47AA-VOC-LF	*	SUR-002-L	+
102	11	8	2.23E-10	0.95070	CONT-LEAK	*	FA2	*	FS2	*	LAMBDA-CSR	*
103					Q2TG	*	QWS	*	RHRF03AA-VOC-LF	*	SUR-002-L	+
104	2	8	2.23E-10	0.95329	CONT-LEAK	*	FA2	*	FS2	*	LAMBDA-CSR	*
105					Q2TG	*	QWS	*	RHRF98AX-XOC-LF	*	SUR-002-L	+
106	33	8	2.03E-10	0.95565	C0DG002-CCC-LF	*	CONT-LEAK	*	FA2	*	FS2	*
107					LAMBDA-CSR	*	Q2TG	*	QWS	*	SUR-002-L	+
108	13	8	2.03E-10	0.95801	CONT-LEAK	*	FA2	*	FS2	*	LAMBDA-CSR	*
109					Q2TG	*	QWS	*	RHRF31AX-CCC-LF	*	SUR-002-L	+
110	84	8	1.90E-10	0.96023	C0DG01P-PMS-CC	*	/CONT-LEAK	*	FA2	*	FS2	*
111					LAMBDA-CSR	*	Q2TG	*	QWS	*	SUR-027-R	+
112	76	8	1.90E-10	0.96244	/CONT-LEAK	*	FA2	*	FS2	*	LAMBDA-CSR	*
113					NWVY01CA-FMS-CC	*	Q2TG	*	QWS	*	SUR-027-R	+
114	75	8	1.90E-10	0.96465	/CONT-LEAK	*	FA2	*	FS2	*	LAMBDA-CSR	*
115					Q2TG	*	QWS	*	RHRB01AA-BOO-CC	*	SUR-027-R	+
116	30	8	1.71E-10	0.96663	CCBF068A-BCO-LF	*	CONT-LEAK	*	FA2	*	FS2	*
117					LAMBDA-CSR	*	Q2TG	*	QWS	*	SUR-002-L	+
118	48	8	1.71E-10	0.96862	1EB16211-BCO	*	CONT-LEAK	*	FA2	*	FS2	*
119					LAMBDA-CSR	*	Q2TG	*	QWS	*	SUR-002-L	+
120	21	8	1.71E-10	0.97060	CCB0DG1P-BCO-LF	*	CONT-LEAK	*	FA2	*	FS2	*
121					LAMBDA-CSR	*	Q2TG	*	QWS	*	SUR-002-L	+
122	45	9	1.52E-10	0.97237	CONT-LEAK	*	FA2	*	FS2	*	LAMBDA-CSR	*
123					LPCI-MOV-BETA	*	LPCI-MOV-CM2	*	Q2TG	*	QWS	*
124					SUR-002-L	+						
125	44	9	1.52E-10	0.97414	CONT-LEAK	*	FA2	*	FS2	*	LAMBDA-CSR	*
126					LPCI-MOV-BETA	*	LPCI-MOV-CM1	*	Q2TG	*	QWS	*
127					SUR-002-L	+						
128	15	8	1.46E-10	0.97584	1EB211YX-BCO-LF	*	CONT-LEAK	*	FA2	*	FS2	*
129					LAMBDA-CSR	*	Q2TG	*	QWS	*	SUR-002-L	+
130	26	8	1.46E-10	0.97754	1EB235XA-BCO-LF	*	CONT-LEAK	*	FA2	*	FS2	*
131					LAMBDA-CSR	*	Q2TG	*	QWS	*	SUR-002-L	+
132	23	8	1.46E-10	0.97924	1EB1Y22X-BCO	*	CONT-LEAK	*	FA2	*	FS2	*
133					LAMBDA-CSR	*	Q2TG	*	QWS	*	SUR-002-L	+

134	5	8	1.46E-10	0.98094	CONT-LEAK	*	FA2	*	FS2	*	LAMBDA-CSR	*	
135					NWVB001X-BCO-LF	*	Q2TG	*	QWS	*	SUR-002-L	+	
136	39	8	1.46E-10	0.98264	1EB235YA-BCO-LF	*	CONT-LEAK	*	FA2	*	FS2	*	
137					LAMBDA-CSR	*	Q2TG	*	QWS	*	SUR-002-L	+	
138	35	8	1.46E-10	0.98434	1EB35Y2X-BCO-LF	*	CONT-LEAK	*	FA2	*	FS2	*	
139					LAMBDA-CSR	*	Q2TG	*	QWS	*	SUR-002-L	+	
140	34	8	1.46E-10	0.98604	1EB235A-BCO-LF	*	CONT-LEAK	*	FA2	*	FS2	*	
141					LAMBDA-CSR	*	Q2TG	*	QWS	*	SUR-002-L	+	
142	113	8	9.14E-11	0.98710	/CONT-LEAK	*	CSCD300A-PLG-LF	*	FA2	*	FS2	*	
143					LAMBDA-CSR	*	Q2TG	*	QWS	*	SUR-027-R	+	
144	111	8	8.38E-11	0.98807	C0DG01P-PMS-LF	*	/CONT-LEAK	*	FA2	*	FS2	*	
145					LAMBDA-CSR	*	Q2TG	*	QWS	*	SUR-027-R	+	
146	73	8	8.38E-11	0.98905	/CONT-LEAK	*	FA2	*	FS2	*	LAMBDA-CSR	*	
147					Q2TG	*	QWS	*	RHRC02AA-PMS-LF	*	SUR-027-R	+	
148	88	8	6.40E-11	0.98979	/CONT-LEAK	*	FA2	*	FS2	*	LAMBDA-CSR	*	
149					NWVY01AX-ACX-LFI	*	Q2TG	*	QWS	*	SUR-027-R	+	
150	99	8	5.48E-11	0.99043	/CONT-LEAK	*	EE-CSCD300A-PLG	*	FA2	*	FS2	*	
151					LAMBDA-CSR	*	Q2TG	*	QWS	*	SUR-027-R	+	
152	32	9	4.88E-11	0.99099	CONT-LEAK	*	FA2	*	FLOW-RHR-A3	*	FS2	*	
153					LAMBDA-CSR	*	Q2TG	*	QWS	*	RHRB03AX-BCO-LF	*	
154					SUR-002-L	+							
155	65	8	4.42E-11	0.99151	C0DG01F-PLG-LF	*	/CONT-LEAK	*	FA2	*	FS2	*	
156					LAMBDA-CSR	*	Q2TG	*	QWS	*	SUR-027-R	+	
157	64	8	4.11E-11	0.99198	/CONT-LEAK	*	FA2	*	FS2	*	LAMBDA-CSR	*	
158					NWVY01CA-FMS-LF	*	Q2TG	*	QWS	*	SUR-027-R	+	
159	110	9	3.81E-11	0.99243	/CONT-LEAK	*	FA2	*	FLOW-RHR-A3	*	FS2	*	
160					LAMBDA-CSR	*	Q2TG	*	QWS	*	RHRF48AA-VOO-LF	*	
161					SUR-027-R	+							
162	94	8	3.81E-11	0.99287	/CONT-LEAK	*	FA2	*	FS2	*	LAMBDA-CSR	*	
163					NWVY01CA-F-UUM	*	Q2TG	*	QWS	*	SUR-027-R	+	
164	86	8	3.81E-11	0.99331	/CONT-LEAK	*	CSCF068A-VCC-LF	*	FA2	*	FS2	*	
165					LAMBDA-CSR	*	Q2TG	*	QWS	*	SUR-027-R	+	
166	77	8	3.81E-11	0.99375	/CONT-LEAK	*	FA2	*	FS2	*	LAMBDA-CSR	*	
167					Q2TG	*	QWS	*	RHRB01AA-BOO-LF	*	SUR-027-R	+	
168	103	8	2.29E-11	0.99402	/CONT-LEAK	*	CSCF008A-V-UUM	*	FA2	*	FS2	*	
169					LAMBDA-CSR	*	Q2TG	*	QWS	*	SUR-027-R	+	
170	93	8	2.29E-11	0.99429	C0DG01F-S-UUM	*	/CONT-LEAK	*	FA2	*	FS2	*	
171					LAMBDA-CSR	*	Q2TG	*	QWS	*	SUR-027-R	+	
172	69	8	2.29E-11	0.99455	/CONT-LEAK	*	CSCD300A-S-UUM	*	FA2	*	FS2	*	
173					LAMBDA-CSR	*	Q2TG	*	QWS	*	SUR-027-R	+	
174	61	8	2.29E-11	0.99482	/CONT-LEAK	*	FA2	*	FS2	*	LAMBDA-CSR	*	
175					Q2TG	*	QWS	*	RHRH01AX-H-UUM	*	SUR-027-R	+	
176	114	9	2.29E-11	0.99508	/CONT-LEAK	*	FA2	*	FS2	*	LAMBDA-CSR	*	
177					Q2TG	*	QWS	*	RHRF88AX-R-UUM	*	SCSF06AA-DENER	*	
178					SUR-027-R	+							

179	109	9	2.29E-11	0.99535	/CONT-LEAK	*	FA2	*	FS2	*	LAMBDA-CSR	*
180					Q2TG	*	QWS	*	RHRF47AA-V-UUM	*	SCSF06AA-DENER	*
181					SUR-027-R	+						
182	108	8	2.29E-11	0.99561	/CONT-LEAK	*	FA2	*	FS2	*	LAMBDA-CSR	*
183					Q2TG	*	QWS	*	RHRF51AA-N-UUM	*	SUR-027-R	+
184	106	8	2.29E-11	0.99588	/CONT-LEAK	*	FA2	*	FS2	*	LAMBDA-CSR	*
185					Q2TG	*	QWS	*	RHRF87AA-V-UUM	*	SUR-027-R	+
186	107	8	2.29E-11	0.99614	/CONT-LEAK	*	FA2	*	FS2	*	LAMBDA-CSR	*
187					Q2TG	*	QWS	*	RHRF60AA-S-UUM	*	SUR-027-R	+
188	98	8	2.29E-11	0.99641	/CONT-LEAK	*	FA2	*	FS2	*	LAMBDA-CSR	*
189					Q2TG	*	QWS	*	RHRF65AA-N-UUM	*	SUR-027-R	+
190	97	8	2.29E-11	0.99668	/CONT-LEAK	*	FA2	*	FS2	*	LAMBDA-CSR	*
191					NWVY01AX-A-UUM	*	Q2TG	*	QWS	*	SUR-027-R	+
192	95	8	2.29E-11	0.99694	/CONT-LEAK	*	FA2	*	FS2	*	LAMBDA-CSR	*
193					PC02AAAX-AOO-LFO	*	Q2TG	*	QWS	*	SUR-027-R	+
194	85	8	2.29E-11	0.99721	/CONT-LEAK	*	FA2	*	FS2	*	LAMBDA-CSR	*
195					Q2TG	*	QWS	*	RHRF55AX-R-UUM	*	SUR-027-R	+
196	79	8	2.29E-11	0.99747	/CONT-LEAK	*	FA2	*	FS2	*	LAMBDA-CSR	*
197					Q2TG	*	QWS	*	SCSF06AA-V-UUM	*	SUR-027-R	+
198	74	8	2.29E-11	0.99774	/CONT-LEAK	*	FA2	*	FS2	*	LAMBDA-CSR	*
199					Q2TG	*	QWS	*	RHRF74AA-V-UUM	*	SUR-027-R	+
200	71	9	2.29E-11	0.99800	/CONT-LEAK	*	FA2	*	FS2	*	LAMBDA-CSR	*
201					Q2TG	*	QWS	*	RHRF64AA-V-UUM	*	SCSF06AA-DENER	*
202					SUR-027-R	+						
203	66	9	2.29E-11	0.99827	/CONT-LEAK	*	FA2	*	FLOW-RHR-A3	*	FS2	*
204					LAMBDA-CSR	*	Q2TG	*	QWS	*	RHRF48AA-V-UUM	*
205					SUR-027-R	+						
206	100	9	2.09E-11	0.99851	/CONT-LEAK	*	FA2	*	FS2	*	LAMBDA-CSR	*
207					LPCI-BETA	*	LPCI-PMS-CM	*	Q2TG	*	QWS	*
208					SUR-027-R	+						
209	63	9	8.38E-12	0.99861	/CONT-LEAK	*	FA2	*	FS2	*	LAMBDA-CSR	*
210					NOFLOW-RHR-A1	*	Q2TG	*	QWS	*	RHR301AX-STR	*
211					SUR-027-R	+						
212	59	8	8.38E-12	0.99871	/CONT-LEAK	*	FA2	*	FS2	*	LAMBDA-CSR	*
213					Q2TG	*	QWS	*	RHRF98AX-XOC-LF	*	SUR-027-R	+
214	104	8	8.38E-12	0.99880	/CONT-LEAK	*	FA2	*	FS2	*	LAMBDA-CSR	*
215					Q2TG	*	QWS	*	RHRF47AA-VOC-LF	*	SUR-027-R	+
216	81	9	8.38E-12	0.99890	/CONT-LEAK	*	FA2	*	FS2	*	LAMBDA-CSR	*
217					NOFLOW-RHR-A1	*	Q2TG	*	QWS	*	RHRF04AA-VOC-LF	*
218					SUR-027-R	+						
219	68	8	8.38E-12	0.99900	/CONT-LEAK	*	FA2	*	FS2	*	LAMBDA-CSR	*
220					Q2TG	*	QWS	*	RHRF03AA-VOC-LF	*	SUR-027-R	+
221	90	8	7.62E-12	0.99909	C0DG002-CCC-LF	*	/CONT-LEAK	*	FA2	*	FS2	*
222					LAMBDA-CSR	*	Q2TG	*	QWS	*	SUR-027-R	+
223	70	8	7.62E-12	0.99918	/CONT-LEAK	*	FA2	*	FS2	*	LAMBDA-CSR	*
224					Q2TG	*	QWS	*	RHRF31AX-CCC-LF	*	SUR-027-R	+

225	105	8	6.40E-12	0.99925	1EB16211-BCO	*	/CONT-LEAK	*	FA2	*	FS2	*
226					LAMBDA-CSR	*	Q2TG	*	QWS	*	SUR-027-R	+
227	87	8	6.40E-12	0.99933	CCBF068A-BCO-LF	*	/CONT-LEAK	*	FA2	*	FS2	*
228					LAMBDA-CSR	*	Q2TG	*	QWS	*	SUR-027-R	+
229	78	8	6.40E-12	0.99940	CCB0DG1P-BCO-LF	*	/CONT-LEAK	*	FA2	*	FS2	*
230					LAMBDA-CSR	*	Q2TG	*	QWS	*	SUR-027-R	+
231	102	9	5.71E-12	0.99947	/CONT-LEAK	*	FA2	*	FS2	*	LAMBDA-CSR	*
232					LPCI-MOV-BETA	*	LPCI-MOV-CM2	*	Q2TG	*	QWS	*
233					SUR-027-R	+						
234	101	9	5.71E-12	0.99953	/CONT-LEAK	*	FA2	*	FS2	*	LAMBDA-CSR	*
235					LPCI-MOV-BETA	*	LPCI-MOV-CM1	*	Q2TG	*	QWS	*
236					SUR-027-R	+						
237	62	8	5.48E-12	0.99960	/CONT-LEAK	*	FA2	*	FS2	*	LAMBDA-CSR	*
238					NWVB001X-BCO-LF	*	Q2TG	*	QWS	*	SUR-027-R	+
239	96	8	5.48E-12	0.99966	1EB235YA-BCO-LF	*	/CONT-LEAK	*	FA2	*	FS2	*
240					LAMBDA-CSR	*	Q2TG	*	QWS	*	SUR-027-R	+
241	92	8	5.48E-12	0.99972	1EB35Y2X-BCO-LF	*	/CONT-LEAK	*	FA2	*	FS2	*
242					LAMBDA-CSR	*	Q2TG	*	QWS	*	SUR-027-R	+
243	91	8	5.48E-12	0.99979	1EB235A-BCO-LF	*	/CONT-LEAK	*	FA2	*	FS2	*
244					LAMBDA-CSR	*	Q2TG	*	QWS	*	SUR-027-R	+
245	83	8	5.48E-12	0.99985	1EB235XA-BCO-LF	*	/CONT-LEAK	*	FA2	*	FS2	*
246					LAMBDA-CSR	*	Q2TG	*	QWS	*	SUR-027-R	+
247	80	8	5.48E-12	0.99991	1EB1Y22X-BCO	*	/CONT-LEAK	*	FA2	*	FS2	*
248					LAMBDA-CSR	*	Q2TG	*	QWS	*	SUR-027-R	+
249	72	8	5.48E-12	0.99998	1EB211YX-BCO-LF	*	/CONT-LEAK	*	FA2	*	FS2	*
250					LAMBDA-CSR	*	Q2TG	*	QWS	*	SUR-027-R	+
251	89	9	1.83E-12	1.00000	/CONT-LEAK	*	FA2	*	FLOW-RHR-A3	*	FS2	*
252					LAMBDA-CSR	*	Q2TG	*	QWS	*	RHRB03AX-BCO-LF	*
253					SUR-027-R	.						

TEMAC RUN TIME IN CPU SECONDS 182.93

FIRE-P SEQUENCE

TOP EVENT FIRE-P CONTAINS 76 EVENTS IN 240 CUT SETS

THE FREQUENCY OF TOP EVENT FIRE-P IS 4.34E-07

DESCRIPTIVE STATISTICS FOR THE FREQUENCY OF TOP EVENT FIRE-P

N	400
MEAN	5.73E-07
STD DEV	2.23E-06
LOWER 5%	0.00E+00
LOWER 25%	0.00E+00
MEDIAN	0.00E+00
UPPER 25%	1.73E-07
UPPER 5%	2.28E-06

90% UNCERTAINTY INTERVAL FOR TOP EVENT FREQUENCY (INNERMOST BRACKETS DENOTE INTERQUARTILE RANGE, ASTERISK DENOTES MEDIAN, N DENOTES NOMINAL VALUE AND M DENOTES MEAN)

NOMENCLATURE:

PD = PARTIAL DERIVATIVE

TEF = FREQUENCY OF THE TOP EVENT

EV(J) = PROBABILITY OF EVENT J FOR BASE EVENTS
= FREQUENCY OF EVENT J FOR INITIATING EVENTS

MEASURES:

1. FOR BASE EVENTS AND INITIATING EVENTS:

RISK REDUCTION = PD x EV(J)
= TEF - TEF(EVALUATED WITH EV(J) = 0)

2. FOR BASE EVENTS ONLY:

RISK INCREASE = PD - RISK REDUCTION
= PD x (1 - EV(J))
= TEF(EVALUATED WITH EV(J) = 1) - TEF

FIRE-P SEQUENCE
RISK REDUCTION BY BASE EVENT (WITH ASSOCIATED UNCERTAINTY INTERVALS)

BASE EVENT	OCCUR	PROB	(RANK)	RISK REDUCTION	(RANK)	LOWER 5%	UPPER 5%
LAMBDA-AUX	240	5.40E-02	(12.0)	4.34E-07	(2.0)	0.00E+00	2.28E-06
FAP	240	6.00E-02	(11.0)	4.34E-07	(2.0)	0.00E+00	2.28E-06
Q3TG	240	9.70E-01	(5.0)	4.34E-07	(2.0)	0.00E+00	2.28E-06
SUR-002-L	120	1.60E-01	(9.0)	4.19E-07	(4.0)	0.00E+00	2.15E-06
CONT-LEAK	240	7.50E-01	(6.0)	3.71E-07	(5.0)	0.00E+00	2.15E-06
FA3	120	5.00E-02	(13.0)	2.49E-07	(6.5)	0.00E+00	1.45E-06
FS2	120	3.00E-01	(8.0)	2.49E-07	(6.5)	0.00E+00	1.45E-06
FS3	120	7.00E-01	(7.0)	1.86E-07	(8.5)	0.00E+00	1.09E-06
FA4	120	1.60E-02	(16.0)	1.86E-07	(8.5)	0.00E+00	1.09E-06
RHRH01BX-HTX-LFB	4	6.20E-03	(17.0)	6.36E-08	(10.0)	0.00E+00	3.72E-07
SCSF06BB-DENER	16	1.00E+00	(2.5)	4.00E-08	(11.0)		
RHRC02BB-P-NDUUM	4	3.00E-03	(19.5)	3.08E-08	(13.5)	0.00E+00	1.61E-07
RHRC02BB-P-UUM	4	3.00E-03	(19.5)	3.08E-08	(13.5)	0.00E+00	1.10E-07
C2DG01P-P-UUM	4	3.00E-03	(19.5)	3.08E-08	(13.5)	0.00E+00	1.61E-07
RHRC003B-P-UUM	4	3.00E-03	(19.5)	3.08E-08	(13.5)	0.00E+00	1.10E-07
SEVY03CB-FMS-CC	4	2.50E-03	(24.5)	2.56E-08	(17.0)	0.00E+00	1.34E-07
RHRB01BB-BOO-CC	4	2.50E-03	(24.5)	2.56E-08	(17.0)	0.00E+00	1.34E-07
C2DG01P-PMS-CC	4	2.50E-03	(24.5)	2.56E-08	(17.0)	0.00E+00	1.34E-07
SUR-027-R	120	1.80E-02	(15.0)	1.57E-08	(19.0)	0.00E+00	3.06E-07
1EDC2DEP-FROP-4	8	1.00E+00	(2.5)	1.48E-08	(20.0)		
CSCD300B-PLG-LF	4	1.20E-03	(28.0)	1.23E-08	(21.0)	0.00E+00	6.16E-08
RHRC02BB-PMS-LF	4	1.10E-03	(29.5)	1.13E-08	(22.5)	0.00E+00	5.55E-08
C2DG01P-PMS-LF	4	1.10E-03	(29.5)	1.13E-08	(22.5)	0.00E+00	5.55E-08
SEVY03AX-ACX-LFI	4	8.40E-04	(31.0)	8.61E-09	(24.0)	0.00E+00	4.69E-08
FLOW-RHR-B3	12	1.00E+00	(2.5)	8.45E-09	(25.0)		
EE-C2DG01F-PLG	4	7.20E-04	(32.5)	7.38E-09	(26.5)	0.00E+00	2.73E-08
EE-CSCD300B-PLG	4	7.20E-04	(32.5)	7.38E-09	(26.5)	0.00E+00	2.73E-08
C2DG01F-PLG-LF	4	5.80E-04	(34.0)	5.95E-09	(28.0)	0.00E+00	2.89E-08
SEVY03CB-FMS-LF	4	5.40E-04	(35.0)	5.54E-09	(29.0)	0.00E+00	3.49E-08
CSCF068B-VCC-LF	4	5.00E-04	(38.0)	5.13E-09	(32.0)	0.00E+00	3.34E-08
2DG1PK18-ROO-LFO	4	5.00E-04	(38.0)	5.13E-09	(32.0)	0.00E+00	2.08E-08
RHRB01BB-BOO-LF	4	5.00E-04	(38.0)	5.13E-09	(32.0)	0.00E+00	2.46E-08
SEVY03CB-F-UUM	4	5.00E-04	(38.0)	5.13E-09	(32.0)	0.00E+00	3.74E-08
RHRF48BB-VOO-LF	4	5.00E-04	(38.0)	5.13E-09	(32.0)	0.00E+00	3.34E-08
RHRF87BB-V-UUM	4	3.00E-04	(49.5)	3.08E-09	(43.5)	0.00E+00	2.13E-08
RHRF74BB-V-UUM	4	3.00E-04	(49.5)	3.08E-09	(43.5)	0.00E+00	2.13E-08
RHRF65BB-N-UUM	4	3.00E-04	(49.5)	3.08E-09	(43.5)	0.00E+00	2.13E-08
RHRF60BB-S-UUM	4	3.00E-04	(49.5)	3.08E-09	(43.5)	0.00E+00	2.13E-08
RHRF55BX-R-UUM	4	3.00E-04	(49.5)	3.08E-09	(43.5)	0.00E+00	2.13E-08
RHRF51BB-N-UUM	4	3.00E-04	(49.5)	3.08E-09	(43.5)	0.00E+00	2.13E-08

RHRF48BB-V-UUM	4	3.00E-04	(49.5)	3.08E-09	(43.5)	0.00E+00	2.13E-08
RHRF47BB-V-UUM	4	3.00E-04	(49.5)	3.08E-09	(43.5)	0.00E+00	2.13E-08
C2DG01F-S-UUM	4	3.00E-04	(49.5)	3.08E-09	(43.5)	0.00E+00	1.06E-08
SEVY03AX-A-UUM	4	3.00E-04	(49.5)	3.08E-09	(43.5)	0.00E+00	1.06E-08
RHRF88BX-R-UUM	4	3.00E-04	(49.5)	3.08E-09	(43.5)	0.00E+00	2.13E-08
RHRF64BB-V-UUM	4	3.00E-04	(49.5)	3.08E-09	(43.5)	0.00E+00	2.13E-08
CSCF068B-V-UUM	4	3.00E-04	(49.5)	3.08E-09	(43.5)	0.00E+00	2.13E-08
CSCD300B-S-UUM	4	3.00E-04	(49.5)	3.08E-09	(43.5)	0.00E+00	1.06E-08
2DG01PSC-OOO-LFO	4	3.00E-04	(49.5)	3.08E-09	(43.5)	0.00E+00	1.55E-08
SCSF06BB-V-UUM	4	3.00E-04	(49.5)	3.08E-09	(43.5)	0.00E+00	2.13E-08
2DG01PK18CA-LFOO	4	3.00E-04	(49.5)	3.08E-09	(43.5)	0.00E+00	1.55E-08
RHRH01BX-H-UUM	4	3.00E-04	(49.5)	3.08E-09	(43.5)	0.00E+00	1.06E-08
LPCI-PMS-CM	4	2.50E-03	(24.5)	2.82E-09	(53.5)	0.00E+00	1.08E-08
LPCI-BETA	4	1.10E-01	(10.0)	2.82E-09	(53.5)	0.00E+00	1.08E-08
NOFLOW-RHR-B1	8	1.00E+00	(2.5)	2.26E-09	(55.0)		
LPCI-MOV-BETA	8	3.00E-02	(14.0)	1.54E-09	(56.0)	0.00E+00	6.63E-09
RHRF47BB-VOC-LF	4	1.10E-04	(61.0)	1.13E-09	(59.0)	0.00E+00	6.98E-09
RHRF04BB-VOC-LF	4	1.10E-04	(61.0)	1.13E-09	(59.0)	0.00E+00	6.98E-09
RHRF03BB-VOC-LF	4	1.10E-04	(61.0)	1.13E-09	(59.0)	0.00E+00	6.98E-09
RHR301BX-STR	4	1.10E-04	(61.0)	1.13E-09	(59.0)	0.00E+00	5.34E-09
RHRF98BX-XOC-LF	4	1.10E-04	(61.0)	1.13E-09	(59.0)	0.00E+00	6.98E-09
RHRF31BX-CCC-LF	4	1.00E-04	(64.5)	1.03E-09	(62.5)	0.00E+00	7.36E-09
C2DGF002-CCC-LF	4	1.00E-04	(64.5)	1.03E-09	(62.5)	0.00E+00	7.36E-09
CSCB068X-BCO-LF	4	8.40E-05	(67.0)	8.61E-10	(65.0)	0.00E+00	3.53E-09
CCB2DG1P-BCO-LF	4	8.40E-05	(67.0)	8.61E-10	(65.0)	0.00E+00	3.53E-09
1EB16212-BCO	4	8.40E-05	(67.0)	8.61E-10	(65.0)	0.00E+00	3.53E-09
LPCI-MOV-CM2	4	2.50E-03	(24.5)	7.69E-10	(67.5)	0.00E+00	3.32E-09
LPCI-MOV-CM1	4	2.50E-03	(24.5)	7.69E-10	(67.5)	0.00E+00	3.32E-09
1EB36YB-BCO-LF	4	7.20E-05	(72.0)	7.38E-10	(72.0)	0.00E+00	3.03E-09
1EB36Y1X-BCO-LF	4	7.20E-05	(72.0)	7.38E-10	(72.0)	0.00E+00	3.03E-09
1EB236B-BCO-LF	4	7.20E-05	(72.0)	7.38E-10	(72.0)	0.00E+00	3.03E-09
1EB36XB-BCO-LF	4	7.20E-05	(72.0)	7.38E-10	(72.0)	0.00E+00	3.03E-09
1EB212YX-BCO-LF	4	7.20E-05	(72.0)	7.38E-10	(72.0)	0.00E+00	3.03E-09
SEVB001X-BCO-LF	4	7.20E-05	(72.0)	7.38E-10	(72.0)	0.00E+00	3.03E-09
1EB2Y22X-BCO	4	7.20E-05	(72.0)	7.38E-10	(72.0)	0.00E+00	3.03E-09
RHRB03BX-BCO-LF	4	2.40E-05	(76.0)	2.46E-10	(76.0)	0.00E+00	9.91E-10

FIRE-P SEQUENCE
RISK INCREASE BY BASE EVENT (WITH ASSOCIATED UNCERTAINTY INTERVALS)

BASE EVENT	OCCUR	PROB	(RANK)	RISK INCREASE	(RANK)	LOWER 5%	UPPER 5%
FA4	120	1.60E-02	(16.0)	1.14E-05	(1.0)	0.00E+00	7.27E-05
RHRB03BX-BCO-LF	4	2.40E-05	(76.0)	1.03E-05	(2.0)	0.00E+00	7.22E-05
1EB36YB-BCO-LF	4	7.20E-05	(72.0)	1.03E-05	(6.0)	0.00E+00	7.22E-05
1EB236B-BCO-LF	4	7.20E-05	(72.0)	1.03E-05	(6.0)	0.00E+00	7.22E-05
1EB212YX-BCO-LF	4	7.20E-05	(72.0)	1.03E-05	(6.0)	0.00E+00	7.22E-05
1EB2Y22X-BCO	4	7.20E-05	(72.0)	1.03E-05	(6.0)	0.00E+00	7.22E-05
1EB36Y1X-BCO-LF	4	7.20E-05	(72.0)	1.03E-05	(6.0)	0.00E+00	7.22E-05
SEVB001X-BCO-LF	4	7.20E-05	(72.0)	1.03E-05	(6.0)	0.00E+00	7.22E-05
1EB36XB-BCO-LF	4	7.20E-05	(72.0)	1.03E-05	(6.0)	0.00E+00	7.22E-05
CSCB068X-BCO-LF	4	8.40E-05	(67.0)	1.03E-05	(11.0)	0.00E+00	7.22E-05
CCB2DG1P-BCO-LF	4	8.40E-05	(67.0)	1.03E-05	(11.0)	0.00E+00	7.22E-05
1EB16212-BCO	4	8.40E-05	(67.0)	1.03E-05	(11.0)	0.00E+00	7.22E-05
C2DGF002-CCC-LF	4	1.00E-04	(64.5)	1.03E-05	(13.5)	0.00E+00	7.22E-05
RHRF31BX-CCC-LF	4	1.00E-04	(64.5)	1.03E-05	(13.5)	0.00E+00	7.22E-05
RHRF03BB-VOC-LF	4	1.10E-04	(61.0)	1.03E-05	(17.0)	0.00E+00	7.22E-05
RHRF98BX-XOC-LF	4	1.10E-04	(61.0)	1.03E-05	(17.0)	0.00E+00	7.22E-05
RHRF04BB-VOC-LF	4	1.10E-04	(61.0)	1.03E-05	(17.0)	0.00E+00	7.22E-05
RHRF47BB-VOC-LF	4	1.10E-04	(61.0)	1.03E-05	(17.0)	0.00E+00	7.22E-05
RHR301BX-STR	4	1.10E-04	(61.0)	1.03E-05	(17.0)	0.00E+00	7.22E-05
RHRF74BB-V-UUM	4	3.00E-04	(49.5)	1.02E-05	(28.5)	0.00E+00	7.22E-05
RHRF51BB-N-UUM	4	3.00E-04	(49.5)	1.02E-05	(28.5)	0.00E+00	7.22E-05
C2DG01F-S-UUM	4	3.00E-04	(49.5)	1.02E-05	(28.5)	0.00E+00	7.22E-05
RHRF47BB-V-UUM	4	3.00E-04	(49.5)	1.02E-05	(28.5)	0.00E+00	7.22E-05
CSCF068B-V-UUM	4	3.00E-04	(49.5)	1.02E-05	(28.5)	0.00E+00	7.22E-05
RHRF64BB-V-UUM	4	3.00E-04	(49.5)	1.02E-05	(28.5)	0.00E+00	7.22E-05
CSCD300B-S-UUM	4	3.00E-04	(49.5)	1.02E-05	(28.5)	0.00E+00	7.22E-05
RHRF55BX-R-UUM	4	3.00E-04	(49.5)	1.02E-05	(28.5)	0.00E+00	7.22E-05
RHRF60BB-S-UUM	4	3.00E-04	(49.5)	1.02E-05	(28.5)	0.00E+00	7.22E-05
RHRF65BB-N-UUM	4	3.00E-04	(49.5)	1.02E-05	(28.5)	0.00E+00	7.22E-05
RHRF87BB-V-UUM	4	3.00E-04	(49.5)	1.02E-05	(28.5)	0.00E+00	7.22E-05
RHRF48BB-V-UUM	4	3.00E-04	(49.5)	1.02E-05	(28.5)	0.00E+00	7.22E-05
2DG01PSC-OOO-LFO	4	3.00E-04	(49.5)	1.02E-05	(28.5)	0.00E+00	7.22E-05
2DG01PK18CA-LFOO	4	3.00E-04	(49.5)	1.02E-05	(28.5)	0.00E+00	7.22E-05
SEVY03AX-A-UUM	4	3.00E-04	(49.5)	1.02E-05	(28.5)	0.00E+00	7.22E-05
SCSF06BB-V-UUM	4	3.00E-04	(49.5)	1.02E-05	(28.5)	0.00E+00	7.22E-05
RHRH01BX-H-UUM	4	3.00E-04	(49.5)	1.02E-05	(28.5)	0.00E+00	7.22E-05
RHRF88BX-R-UUM	4	3.00E-04	(49.5)	1.02E-05	(28.5)	0.00E+00	7.22E-05
RHRF48BB-VOO-LF	4	5.00E-04	(38.0)	1.02E-05	(40.0)	0.00E+00	7.22E-05
CSCF068B-VCC-LF	4	5.00E-04	(38.0)	1.02E-05	(40.0)	0.00E+00	7.22E-05
2DG1PK18-ROO-LFO	4	5.00E-04	(38.0)	1.02E-05	(40.0)	0.00E+00	7.21E-05

RHRB01BB-BOO-LF	4	5.00E-04	(38.0)	1.02E-05	(40.0)	0.00E+00	7.20E-05
SEVY03CB-F-UUM	4	5.00E-04	(38.0)	1.02E-05	(40.0)	0.00E+00	7.22E-05
SEVY03CB-FMS-LF	4	5.40E-04	(35.0)	1.02E-05	(43.0)	0.00E+00	7.22E-05
C2DG01F-PLG-LF	4	5.80E-04	(34.0)	1.02E-05	(44.0)	0.00E+00	7.22E-05
EE-CSCD300B-PLG	4	7.20E-04	(32.5)	1.02E-05	(45.5)	0.00E+00	7.22E-05
EE-C2DG01F-PLG	4	7.20E-04	(32.5)	1.02E-05	(45.5)	0.00E+00	7.22E-05
SEVY03AX-ACX-LFI	4	8.40E-04	(31.0)	1.02E-05	(47.0)	0.00E+00	7.22E-05
RHRC02BB-PMS-LF	4	1.10E-03	(29.5)	1.02E-05	(48.5)	0.00E+00	7.22E-05
C2DG01P-PMS-LF	4	1.10E-03	(29.5)	1.02E-05	(48.5)	0.00E+00	7.22E-05
CSCD300B-PLG-LF	4	1.20E-03	(28.0)	1.02E-05	(50.0)	0.00E+00	7.21E-05
C2DG01P-PMS-CC	4	2.50E-03	(24.5)	1.02E-05	(52.0)	0.00E+00	7.21E-05
RHRB01BB-BOO-CC	4	2.50E-03	(24.5)	1.02E-05	(52.0)	0.00E+00	7.21E-05
SEVY03CB-FMS-CC	4	2.50E-03	(24.5)	1.02E-05	(52.0)	0.00E+00	7.21E-05
C2DG01P-P-UUM	4	3.00E-03	(19.5)	1.02E-05	(55.5)	0.00E+00	7.20E-05
RHRC02BB-P-UUM	4	3.00E-03	(19.5)	1.02E-05	(55.5)	0.00E+00	7.21E-05
RHRC02BB-P-NDUUM	4	3.00E-03	(19.5)	1.02E-05	(55.5)	0.00E+00	7.20E-05
RHRC003B-P-UUM	4	3.00E-03	(19.5)	1.02E-05	(55.5)	0.00E+00	7.21E-05
RHRH01BX-HTX-LFB	4	6.20E-03	(17.0)	1.02E-05	(58.0)	0.00E+00	7.09E-05
LAMBDA-AUX	240	5.40E-02	(12.0)	7.61E-06	(59.0)	0.00E+00	4.71E-05
FAP	240	6.00E-02	(11.0)	6.80E-06	(60.0)	0.00E+00	5.56E-05
FA3	120	5.00E-02	(13.0)	4.72E-06	(61.0)	0.00E+00	3.11E-05
SUR-002-L	120	1.60E-01	(9.0)	2.20E-06	(62.0)	0.00E+00	7.20E-06
LPCI-PMS-CM	4	2.50E-03	(24.5)	1.12E-06	(63.0)	0.00E+00	5.98E-06
SUR-027-R	120	1.80E-02	(15.0)	8.56E-07	(64.0)	0.00E+00	3.86E-06
FS2	120	3.00E-01	(8.0)	5.80E-07	(65.0)	0.00E+00	3.77E-06
LPCI-MOV-CM2	4	2.50E-03	(24.5)	3.07E-07	(66.5)	0.00E+00	1.84E-06
LPCI-MOV-CM1	4	2.50E-03	(24.5)	3.07E-07	(66.5)	0.00E+00	1.84E-06
CONT-LEAK	240	7.50E-01	(6.0)	1.24E-07	(68.0)	-3.06E-07	0.00E+00
FS3	120	7.00E-01	(7.0)	7.95E-08	(69.0)	0.00E+00	4.26E-07
LPCI-MOV-BETA	8	3.00E-02	(14.0)	4.97E-08	(70.0)	0.00E+00	2.54E-07
LPCI-BETA	4	1.10E-01	(10.0)	2.28E-08	(71.0)	0.00E+00	1.26E-07
Q3TG	240	9.70E-01	(5.0)	1.34E-08	(72.0)	0.00E+00	8.62E-08
FLOW-RHR-B3	12	1.00E+00	(2.5)	0.00E+00	(74.5)		
NOFLOW-RHR-B1	8	1.00E+00	(2.5)	0.00E+00	(74.5)		
SCSF06BB-DENER	16	1.00E+00	(2.5)	0.00E+00	(74.5)		
1EDC2DEP-FROP-4	8	1.00E+00	(2.5)	0.00E+00	(74.5)		

FIRE-P SEQUENCE
UNCERTAINTY IMPORTANCE BY BASE EVENT

BASE EVENT	OCCUR	PROB	(RANK)	% REDUCTION IN THE UNCERTAINTY OF LOG RISK	(RANK)	Y.05/TE.05*	Y.95/TE.95*
SUR-002-L	120	1.60E-01	(9.0)	54.3	(1.0)	NA	0.78
SUR-027-R	120	1.80E-02	(15.0)	20.4	(2.0)	NA	0.94
CONT-LEAK	240	7.50E-01	(6.0)	12.0	(3.0)	NA	0.71
LAMBDA-AUX	240	5.40E-02	(12.0)	3.1	(4.0)	NA	1.13
RHRH01BX-HTX-LFB	4	6.20E-03	(17.0)	2.7	(5.0)	NA	0.97
SEVY03AX-ACX-LFI	4	8.40E-04	(31.0)	2.5	(6.0)	NA	1.01
FAP	240	6.00E-02	(11.0)	2.4	(7.0)	NA	1.58
CSCF068B-VCC-LF	4	5.00E-04	(38.0)	2.3	(8.5)	NA	1.01
RHRF48BB-VOO-LF	4	5.00E-04	(38.0)	2.3	(8.5)	NA	1.01
EE-CSCD300B-PLG	4	7.20E-04	(32.5)	1.8	(10.5)	NA	0.98
EE-C2DG01F-PLG	4	7.20E-04	(32.5)	1.8	(10.5)	NA	0.98
FA3	120	5.00E-02	(13.0)	1.7	(12.0)	NA	1.15
CSCD300B-PLG-LF	4	1.20E-03	(28.0)	1.7	(13.0)	NA	0.98
C2DG01F-PLG-LF	4	5.80E-04	(34.0)	1.7	(14.0)	NA	0.99
LPCI-MOV-BETA	8	3.00E-02	(14.0)	1.6	(15.0)	NA	0.99
RHRF60BB-S-UUM	4	3.00E-04	(49.5)	1.5	(21.5)	NA	0.99
CSCF068B-V-UUM	4	3.00E-04	(49.5)	1.5	(21.5)	NA	0.99
RHRF48BB-V-UUM	4	3.00E-04	(49.5)	1.5	(21.5)	NA	0.99
RHRF55BX-R-UUM	4	3.00E-04	(49.5)	1.5	(21.5)	NA	0.99
RHRF74BB-V-UUM	4	3.00E-04	(49.5)	1.5	(21.5)	NA	0.99
RHRF87BB-V-UUM	4	3.00E-04	(49.5)	1.5	(21.5)	NA	0.99
RHRF65BB-N-UUM	4	3.00E-04	(49.5)	1.5	(21.5)	NA	0.99
RHRF64BB-V-UUM	4	3.00E-04	(49.5)	1.5	(21.5)	NA	0.99
SCSF06BB-V-UUM	4	3.00E-04	(49.5)	1.5	(21.5)	NA	0.99
RHRF51BB-N-UUM	4	3.00E-04	(49.5)	1.5	(21.5)	NA	0.99
RHRF47BB-V-UUM	4	3.00E-04	(49.5)	1.5	(21.5)	NA	0.99
RHRF88BX-R-UUM	4	3.00E-04	(49.5)	1.5	(21.5)	NA	0.99
C2DG01P-P-UUM	4	3.00E-03	(19.5)	1.5	(28.5)	NA	1.00
RHRC02BB-P-NDUUM	4	3.00E-03	(19.5)	1.5	(28.5)	NA	1.00
FS3	120	7.00E-01	(7.0)	1.5	(30.0)	NA	1.03
RHRF47BB-VOC-LF	4	1.10E-04	(61.0)	1.4	(32.5)	NA	0.99
RHRF04BB-VOC-LF	4	1.10E-04	(61.0)	1.4	(32.5)	NA	0.99
RHRF03BB-VOC-LF	4	1.10E-04	(61.0)	1.4	(32.5)	NA	0.99
RHRF98BX-XOC-LF	4	1.10E-04	(61.0)	1.4	(32.5)	NA	0.99
FA4	120	1.60E-02	(16.0)	1.4	(35.0)	NA	1.32
Q3TG	240	9.70E-01	(5.0)	1.4	(36.0)	NA	1.04
RHRB01BB-BOO-LF	4	5.00E-04	(38.0)	1.3	(37.0)	NA	1.00
RHRF31BX-CCC-LF	4	1.00E-04	(64.5)	1.2	(38.5)	NA	1.00
C2DGF002-CCC-LF	4	1.00E-04	(64.5)	1.2	(38.5)	NA	1.00
RHRB03BX-BCO-LF	4	2.40E-05	(76.0)	1.2	(40.0)	NA	1.00

SEVY03CB-F-UUM	4	5.00E-04	(38.0)	0.8	(41.0)	NA	1.00
CSCB068X-BCO-LF	4	8.40E-05	(67.0)	0.8	(43.0)	NA	0.99
1EB16212-BCO	4	8.40E-05	(67.0)	0.8	(43.0)	NA	0.99
CCB2DG1P-BCO-LF	4	8.40E-05	(67.0)	0.8	(43.0)	NA	0.99
FS2	120	3.00E-01	(8.0)	0.6	(45.0)	NA	1.13
1EB36YB-BCO-LF	4	7.20E-05	(72.0)	0.6	(49.0)	NA	0.98
1EB236B-BCO-LF	4	7.20E-05	(72.0)	0.6	(49.0)	NA	0.98
1EB36Y1X-BCO-LF	4	7.20E-05	(72.0)	0.6	(49.0)	NA	0.98
1EB36XB-BCO-LF	4	7.20E-05	(72.0)	0.6	(49.0)	NA	0.98
SEVB001X-BCO-LF	4	7.20E-05	(72.0)	0.6	(49.0)	NA	0.98
1EB212YX-BCO-LF	4	7.20E-05	(72.0)	0.6	(49.0)	NA	0.98
1EB2Y22X-BCO	4	7.20E-05	(72.0)	0.6	(49.0)	NA	0.98
C2DG01P-PMS-CC	4	2.50E-03	(24.5)	0.0	(62.5)		
C2DG01F-S-UUM	4	3.00E-04	(49.5)	0.0	(62.5)		
RHRC02BB-PMS-LF	4	1.10E-03	(29.5)	0.0	(62.5)		
SEVY03CB-FMS-LF	4	5.40E-04	(35.0)	0.0	(62.5)		
RHRC02BB-P-UUM	4	3.00E-03	(19.5)	0.0	(62.5)		
RHRC003B-P-UUM	4	3.00E-03	(19.5)	0.0	(62.5)		
CSCD300B-S-UUM	4	3.00E-04	(49.5)	0.0	(62.5)		
2DG1PK18-ROO-LFO	4	5.00E-04	(38.0)	0.0	(62.5)		
RHRB01BB-BOO-CC	4	2.50E-03	(24.5)	0.0	(62.5)		
RHR301BX-STR	4	1.10E-04	(61.0)	0.0	(62.5)		
2DG01PSC-OOO-LFO	4	3.00E-04	(49.5)	0.0	(62.5)		
LPCI-PMS-CM	4	2.50E-03	(24.5)	0.0	(62.5)		
2DG01PK18CA-LFOO	4	3.00E-04	(49.5)	0.0	(62.5)		
LPCI-MOV-CM2	4	2.50E-03	(24.5)	0.0	(62.5)		
SEVY03CB-FMS-CC	4	2.50E-03	(24.5)	0.0	(62.5)		
LPCI-MOV-CM1	4	2.50E-03	(24.5)	0.0	(62.5)		
SEVY03AX-A-UUM	4	3.00E-04	(49.5)	0.0	(62.5)		
LPCI-BETA	4	1.10E-01	(10.0)	0.0	(62.5)		
C2DG01P-PMS-LF	4	1.10E-03	(29.5)	0.0	(62.5)		
RHRH01BX-H-UUM	4	3.00E-04	(49.5)	0.0	(62.5)		
FLOW-RHR-B3	12	1.00E+00	(2.5)				
NOFLOW-RHR-B1	8	1.00E+00	(2.5)				
SCSF06BB-DENER	16	1.00E+00	(2.5)				
1EDC2DEP-FROP-4	8	1.00E+00	(2.5)				

FIRE-P SEQUENCE

CUT SET NUMBERS, CUT SET ORDERS, CUT SET FREQUENCIES,
CUMULATIVE NORMALIZED CUT SET FREQUENCIES AND CUT SETS
FOR TOP EVENT FIRE-P WITH TOP EVENT FREQUENCY 4.34E-07

(THE FIRST COLUMN OF NUMBERS IS THE LINE NUMBERS FOR THE FILE TEMACSETS.DNF)

2	15	8	3.51E-08	0.08078	CONT-LEAK	*	FA3	*	FAP	*	FS2	*
3					LAMBDA-AUX	*	Q3TG	*	RHRH01BX-HTX-LFB	*	SUR-002-L	+
4	135	8	2.62E-08	0.14109	CONT-LEAK	*	FA4	*	FAP	*	FS3	*
5					LAMBDA-AUX	*	Q3TG	*	RHRH01BX-HTX-LFB	*	SUR-002-L	+
6	56	8	1.70E-08	0.18018	CONT-LEAK	*	FA3	*	FAP	*	FS2	*
7					LAMBDA-AUX	*	Q3TG	*	RHRC02BB-P-NDUUM	*	SUR-002-L	+
8	36	9	1.70E-08	0.21926	CONT-LEAK	*	FA3	*	FAP	*	FS2	*
9					LAMBDA-AUX	*	Q3TG	*	RHRC02BB-P-UUM	*	SCSF06BB-DENER	*
10					SUR-002-L	+						
11	54	8	1.70E-08	0.25835	C2DG01P-P-UUM	*	CONT-LEAK	*	FA3	*	FAP	*
12					FS2	*	LAMBDA-AUX	*	Q3TG	*	SUR-002-L	+
13	32	8	1.70E-08	0.29743	CONT-LEAK	*	FA3	*	FAP	*	FS2	*
14					LAMBDA-AUX	*	Q3TG	*	RHRC003B-P-UUM	*	SUR-002-L	+
15	1	8	1.41E-08	0.33001	CONT-LEAK	*	FA3	*	FAP	*	FS2	*
16					LAMBDA-AUX	*	Q3TG	*	SEVY03CB-FMS-CC	*	SUR-002-L	+
17	51	8	1.41E-08	0.36258	C2DG01P-PMS-CC	*	CONT-LEAK	*	FA3	*	FAP	*
18					FS2	*	LAMBDA-AUX	*	Q3TG	*	SUR-002-L	+
19	58	8	1.41E-08	0.39515	CONT-LEAK	*	FA3	*	FAP	*	FS2	*
20					LAMBDA-AUX	*	Q3TG	*	RHRB01BB-BOO-CC	*	SUR-002-L	+
21	174	8	1.27E-08	0.42433	C2DG01P-P-UUM	*	CONT-LEAK	*	FA4	*	FAP	*
22					FS3	*	LAMBDA-AUX	*	Q3TG	*	SUR-002-L	+
23	176	8	1.27E-08	0.45352	CONT-LEAK	*	FA4	*	FAP	*	FS3	*
24					LAMBDA-AUX	*	Q3TG	*	RHRC02BB-P-NDUUM	*	SUR-002-L	+
25	156	9	1.27E-08	0.48270	CONT-LEAK	*	FA4	*	FAP	*	FS3	*
26					LAMBDA-AUX	*	Q3TG	*	RHRC02BB-P-UUM	*	SCSF06BB-DENER	*
27					SUR-002-L	+						
28	152	8	1.27E-08	0.51188	CONT-LEAK	*	FA4	*	FAP	*	FS3	*
29					LAMBDA-AUX	*	Q3TG	*	RHRC003B-P-UUM	*	SUR-002-L	+
30	178	8	1.06E-08	0.53620	CONT-LEAK	*	FA4	*	FAP	*	FS3	*
31					LAMBDA-AUX	*	Q3TG	*	RHRB01BB-BOO-CC	*	SUR-002-L	+
32	121	8	1.06E-08	0.56052	CONT-LEAK	*	FA4	*	FAP	*	FS3	*
33					LAMBDA-AUX	*	Q3TG	*	SEVY03CB-FMS-CC	*	SUR-002-L	+
34	171	8	1.06E-08	0.58484	C2DG01P-PMS-CC	*	CONT-LEAK	*	FA4	*	FAP	*
35					FS3	*	LAMBDA-AUX	*	Q3TG	*	SUR-002-L	+
36	49	8	6.79E-09	0.60048	CONT-LEAK	*	CSCD300B-PLG-LF	*	FA3	*	FAP	*
37					FS2	*	LAMBDA-AUX	*	Q3TG	*	SUR-002-L	+
38	42	8	6.22E-09	0.61481	CONT-LEAK	*	FA3	*	FAP	*	FS2	*
39					LAMBDA-AUX	*	Q3TG	*	RHRC02BB-PMS-LF	*	SUR-002-L	+

40	53	8	6.22E-09	0.62914	C2DG01P-PMS-LF	*	CONT-LEAK	*	FA3	*	FAP	*
41					FS2	*	LAMBDA-AUX	*	Q3TG	*	SUR-002-L	+
42	169	8	5.07E-09	0.64082	CONT-LEAK	*	CSCD300B-PLG-LF	*	FA4	*	FAP	*
43					FS3	*	LAMBDA-AUX	*	Q3TG	*	SUR-002-L	+
44	13	8	4.75E-09	0.65176	CONT-LEAK	*	FA3	*	FAP	*	FS2	*
45					LAMBDA-AUX	*	Q3TG	*	SEVY03AX-ACX-LFI	*	SUR-002-L	+
46	162	8	4.65E-09	0.66246	CONT-LEAK	*	FA4	*	FAP	*	FS3	*
47					LAMBDA-AUX	*	Q3TG	*	RHRC02BB-PMS-LF	*	SUR-002-L	+
48	173	8	4.65E-09	0.67316	C2DG01P-PMS-LF	*	CONT-LEAK	*	FA4	*	FAP	*
49					FS3	*	LAMBDA-AUX	*	Q3TG	*	SUR-002-L	+
50	34	9	4.07E-09	0.68254	1EDC2DEP-FROP-4	*	CONT-LEAK	*	EE-CSCD300B-PLG	*	FA3	*
51					FAP	*	FS2	*	LAMBDA-AUX	*	Q3TG	*
52					SUR-002-L	+						
53	55	9	4.07E-09	0.69192	1EDC2DEP-FROP-4	*	CONT-LEAK	*	EE-C2DG01F-PLG	*	FA3	*
54					FAP	*	FS2	*	LAMBDA-AUX	*	Q3TG	*
55					SUR-002-L	+						
56	133	8	3.55E-09	0.70009	CONT-LEAK	*	FA4	*	FAP	*	FS3	*
57					LAMBDA-AUX	*	Q3TG	*	SEVY03AX-ACX-LFI	*	SUR-002-L	+
58	14	8	3.28E-09	0.70765	C2DG01F-PLG-LF	*	CONT-LEAK	*	FA3	*	FAP	*
59					FS2	*	LAMBDA-AUX	*	Q3TG	*	SUR-002-L	+
60	28	8	3.05E-09	0.71469	CONT-LEAK	*	FA3	*	FAP	*	FS2	*
61					LAMBDA-AUX	*	Q3TG	*	SEVY03CB-FMS-LF	*	SUR-002-L	+
62	175	9	3.04E-09	0.72169	1EDC2DEP-FROP-4	*	CONT-LEAK	*	EE-C2DG01F-PLG	*	FA4	*
63					FAP	*	FS3	*	LAMBDA-AUX	*	Q3TG	*
64					SUR-002-L	+						
65	154	9	3.04E-09	0.72869	1EDC2DEP-FROP-4	*	CONT-LEAK	*	EE-CSCD300B-PLG	*	FA4	*
66					FAP	*	FS3	*	LAMBDA-AUX	*	Q3TG	*
67					SUR-002-L	+						
68	47	8	2.83E-09	0.73521	CONT-LEAK	*	CSCF068B-VCC-LF	*	FA3	*	FAP	*
69					FS2	*	LAMBDA-AUX	*	Q3TG	*	SUR-002-L	+
70	6	8	2.83E-09	0.74172	2DG1PK18-ROO-LFO	*	CONT-LEAK	*	FA3	*	FAP	*
71					FS2	*	LAMBDA-AUX	*	Q3TG	*	SUR-002-L	+
72	12	9	2.83E-09	0.74824	CONT-LEAK	*	FA3	*	FAP	*	FLOW-RHR-B3	*
73					FS2	*	LAMBDA-AUX	*	Q3TG	*	RHRF48BB-VOO-LF	*
74					SUR-002-L	+						
75	11	8	2.83E-09	0.75475	CONT-LEAK	*	FA3	*	FAP	*	FS2	*
76					LAMBDA-AUX	*	Q3TG	*	RHRB01BB-BOO-LF	*	SUR-002-L	+
77	52	8	2.83E-09	0.76127	CONT-LEAK	*	FA3	*	FAP	*	FS2	*
78					LAMBDA-AUX	*	Q3TG	*	SEVY03CB-F-UUM	*	SUR-002-L	+
79	134	8	2.45E-09	0.76691	C2DG01F-PLG-LF	*	CONT-LEAK	*	FA4	*	FAP	*
80					FS3	*	LAMBDA-AUX	*	Q3TG	*	SUR-002-L	+
81	148	8	2.28E-09	0.77216	CONT-LEAK	*	FA4	*	FAP	*	FS3	*
82					LAMBDA-AUX	*	Q3TG	*	SEVY03CB-FMS-LF	*	SUR-002-L	+
83	172	8	2.11E-09	0.77702	CONT-LEAK	*	FA4	*	FAP	*	FS3	*
84					LAMBDA-AUX	*	Q3TG	*	SEVY03CB-F-UUM	*	SUR-002-L	+
85	131	8	2.11E-09	0.78189	CONT-LEAK	*	FA4	*	FAP	*	FS3	*
86					LAMBDA-AUX	*	Q3TG	*	RHRB01BB-BOO-LF	*	SUR-002-L	+

87	132	9	2.11E-09	0.78675	CONT-LEAK	*	FA4	*	FAP	*	FLOW-RHR-B3	*
88					FS3	*	LAMBDA-AUX	*	Q3TG	*	RHRF48BB-VOO-LF	*
89					SUR-002-L	+						
90	167	8	2.11E-09	0.79162	CONT-LEAK	*	CSCF068B-VCC-LF	*	FA4	*	FAP	*
91					FS3	*	LAMBDA-AUX	*	Q3TG	*	SUR-002-L	+
92	126	8	2.11E-09	0.79648	2DG1PK18-ROO-LFO	*	CONT-LEAK	*	FA4	*	FAP	*
93					FS3	*	LAMBDA-AUX	*	Q3TG	*	SUR-002-L	+
94	46	9	1.70E-09	0.80039	CONT-LEAK	*	FA3	*	FAP	*	FS2	*
95					LAMBDA-AUX	*	Q3TG	*	RHRF88BX-R-UUM	*	SCSF06BB-DENER	*
96					SUR-002-L	+						
97	2	9	1.70E-09	0.80430	CONT-LEAK	*	FA3	*	FAP	*	FS2	*
98					LAMBDA-AUX	*	Q3TG	*	RHRF47BB-V-UUM	*	SCSF06BB-DENER	*
99					SUR-002-L	+						
100	40	8	1.70E-09	0.80821	C2DG01F-S-UUM	*	CONT-LEAK	*	FA3	*	FAP	*
101					FS2	*	LAMBDA-AUX	*	Q3TG	*	SUR-002-L	+
102	22	8	1.70E-09	0.81212	2DG01PK18CA-LFOO	*	CONT-LEAK	*	FA3	*	FAP	*
103					FS2	*	LAMBDA-AUX	*	Q3TG	*	SUR-002-L	+
104	5	8	1.70E-09	0.81602	CONT-LEAK	*	FA3	*	FAP	*	FS2	*
105					LAMBDA-AUX	*	Q3TG	*	RHRF55BX-R-UUM	*	SUR-002-L	+
106	7	8	1.70E-09	0.81993	CONT-LEAK	*	FA3	*	FAP	*	FS2	*
107					LAMBDA-AUX	*	Q3TG	*	RHRH01BX-H-UUM	*	SUR-002-L	+
108	29	8	1.70E-09	0.82384	CONT-LEAK	*	CSCF068B-V-UUM	*	FA3	*	FAP	*
109					FS2	*	LAMBDA-AUX	*	Q3TG	*	SUR-002-L	+
110	44	8	1.70E-09	0.82775	2DG01PSC-OOO-LFO	*	CONT-LEAK	*	FA3	*	FAP	*
111					FS2	*	LAMBDA-AUX	*	Q3TG	*	SUR-002-L	+
112	59	8	1.70E-09	0.83166	CONT-LEAK	*	FA3	*	FAP	*	FS2	*
113					LAMBDA-AUX	*	Q3TG	*	RHRF87BB-V-UUM	*	SUR-002-L	+
114	24	8	1.70E-09	0.83557	CONT-LEAK	*	FA3	*	FAP	*	FS2	*
115					LAMBDA-AUX	*	Q3TG	*	RHRF74BB-V-UUM	*	SUR-002-L	+
116	25	9	1.70E-09	0.83948	CONT-LEAK	*	FA3	*	FAP	*	FS2	*
117					LAMBDA-AUX	*	Q3TG	*	RHRF64BB-V-UUM	*	SCSF06BB-DENER	*
118					SUR-002-L	+						
119	8	8	1.70E-09	0.84338	CONT-LEAK	*	FA3	*	FAP	*	FS2	*
120					LAMBDA-AUX	*	Q3TG	*	RHRF60BB-S-UUM	*	SUR-002-L	+
121	10	8	1.70E-09	0.84729	CONT-LEAK	*	CSCD300B-S-UUM	*	FA3	*	FAP	*
122					FS2	*	LAMBDA-AUX	*	Q3TG	*	SUR-002-L	+
123	43	8	1.70E-09	0.85120	CONT-LEAK	*	FA3	*	FAP	*	FS2	*
124					LAMBDA-AUX	*	Q3TG	*	RHRF65BB-N-UUM	*	SUR-002-L	+
125	4	8	1.70E-09	0.85511	CONT-LEAK	*	FA3	*	FAP	*	FS2	*
126					LAMBDA-AUX	*	Q3TG	*	RHRF51BB-N-UUM	*	SUR-002-L	+
127	31	8	1.70E-09	0.85902	CONT-LEAK	*	FA3	*	FAP	*	FS2	*
128					LAMBDA-AUX	*	Q3TG	*	SCSF06BB-V-UUM	*	SUR-002-L	+
129	9	8	1.70E-09	0.86293	CONT-LEAK	*	FA3	*	FAP	*	FS2	*
130					LAMBDA-AUX	*	Q3TG	*	SEVY03AX-A-UUM	*	SUR-002-L	+
131	27	9	1.70E-09	0.86684	CONT-LEAK	*	FA3	*	FAP	*	FLOW-RHR-B3	*
132					FS2	*	LAMBDA-AUX	*	Q3TG	*	RHRF48BB-V-UUM	*
133					SUR-002-L	+						

134	19	9	1.56E-09	0.87042	CONT-LEAK	*	FA3	*	FAP	*	FS2	*
135					LAMBDA-AUX	*	LPCI-BETA	*	LPCI-PMS-CM	*	Q3TG	*
136					SUR-002-L	+						
137	75	8	1.32E-09	0.87345	/CONT-LEAK	*	FA3	*	FAP	*	FS2	*
138					LAMBDA-AUX	*	Q3TG	*	RHRH01BX-HTX-LFB	*	SUR-027-R	+
139	127	8	1.27E-09	0.87637	CONT-LEAK	*	FA4	*	FAP	*	FS3	*
140					LAMBDA-AUX	*	Q3TG	*	RHRH01BX-H-UUM	*	SUR-002-L	+
141	122	9	1.27E-09	0.87928	CONT-LEAK	*	FA4	*	FAP	*	FS3	*
142					LAMBDA-AUX	*	Q3TG	*	RHRF47BB-V-UUM	*	SCSF06BB-DENER	*
143					SUR-002-L	+						
144	142	8	1.27E-09	0.88220	2DG01PK18CA-LFOO	*	CONT-LEAK	*	FA4	*	FAP	*
145					FS3	*	LAMBDA-AUX	*	Q3TG	*	SUR-002-L	+
146	164	8	1.27E-09	0.88512	2DG01PSC-OOO-LFO	*	CONT-LEAK	*	FA4	*	FAP	*
147					FS3	*	LAMBDA-AUX	*	Q3TG	*	SUR-002-L	+
148	151	8	1.27E-09	0.88804	CONT-LEAK	*	FA4	*	FAP	*	FS3	*
149					LAMBDA-AUX	*	Q3TG	*	SCSF06BB-V-UUM	*	SUR-002-L	+
150	149	8	1.27E-09	0.89096	CONT-LEAK	*	CSCF068B-V-UUM	*	FA4	*	FAP	*
151					FS3	*	LAMBDA-AUX	*	Q3TG	*	SUR-002-L	+
152	179	8	1.27E-09	0.89388	CONT-LEAK	*	FA4	*	FAP	*	FS3	*
153					LAMBDA-AUX	*	Q3TG	*	RHRF87BB-V-UUM	*	SUR-002-L	+
154	125	8	1.27E-09	0.89679	CONT-LEAK	*	FA4	*	FAP	*	FS3	*
155					LAMBDA-AUX	*	Q3TG	*	RHRF55BX-R-UUM	*	SUR-002-L	+
156	124	8	1.27E-09	0.89971	CONT-LEAK	*	FA4	*	FAP	*	FS3	*
157					LAMBDA-AUX	*	Q3TG	*	RHRF51BB-N-UUM	*	SUR-002-L	+
158	163	8	1.27E-09	0.90263	CONT-LEAK	*	FA4	*	FAP	*	FS3	*
159					LAMBDA-AUX	*	Q3TG	*	RHRF65BB-N-UUM	*	SUR-002-L	+
160	160	8	1.27E-09	0.90555	C2DG01F-S-UUM	*	CONT-LEAK	*	FA4	*	FAP	*
161					FS3	*	LAMBDA-AUX	*	Q3TG	*	SUR-002-L	+
162	147	9	1.27E-09	0.90847	CONT-LEAK	*	FA4	*	FAP	*	FLOW-RHR-B3	*
163					FS3	*	LAMBDA-AUX	*	Q3TG	*	RHRF48BB-V-UUM	*
164					SUR-002-L	+						
165	145	9	1.27E-09	0.91139	CONT-LEAK	*	FA4	*	FAP	*	FS3	*
166					LAMBDA-AUX	*	Q3TG	*	RHRF64BB-V-UUM	*	SCSF06BB-DENER	*
167					SUR-002-L	+						
168	144	8	1.27E-09	0.91431	CONT-LEAK	*	FA4	*	FAP	*	FS3	*
169					LAMBDA-AUX	*	Q3TG	*	RHRF74BB-V-UUM	*	SUR-002-L	+
170	166	9	1.27E-09	0.91722	CONT-LEAK	*	FA4	*	FAP	*	FS3	*
171					LAMBDA-AUX	*	Q3TG	*	RHRF88BX-R-UUM	*	SCSF06BB-DENER	*
172					SUR-002-L	+						
173	129	8	1.27E-09	0.92014	CONT-LEAK	*	FA4	*	FAP	*	FS3	*
174					LAMBDA-AUX	*	Q3TG	*	SEVY03AX-A-UUM	*	SUR-002-L	+
175	130	8	1.27E-09	0.92306	CONT-LEAK	*	CSCD300B-S-UUM	*	FA4	*	FAP	*
176					FS3	*	LAMBDA-AUX	*	Q3TG	*	SUR-002-L	+
177	128	8	1.27E-09	0.92598	CONT-LEAK	*	FA4	*	FAP	*	FS3	*
178					LAMBDA-AUX	*	Q3TG	*	RHRF60BB-S-UUM	*	SUR-002-L	+

179	139	9	1.16E-09	0.92865	CONT-LEAK	*	FA4	*	FAP	*	FS3	*
180					LAMBDA-AUX	*	LPCI-BETA	*	LPCI-PMS-CM	*	Q3TG	*
181					SUR-002-L	+						
182	195	8	9.82E-10	0.93092	/CONT-LEAK	*	FA4	*	FAP	*	FS3	*
183					LAMBDA-AUX	*	Q3TG	*	RHRH01BX-HTX-LFB	*	SUR-027-R	+
184	96	9	6.36E-10	0.93238	/CONT-LEAK	*	FA3	*	FAP	*	FS2	*
185					LAMBDA-AUX	*	Q3TG	*	RHRC02BB-P-UUM	*	SCSF06BB-DENER	*
186					SUR-027-R	+						
187	114	8	6.36E-10	0.93385	C2DG01P-P-UUM	*	/CONT-LEAK	*	FA3	*	FAP	*
188					FS2	*	LAMBDA-AUX	*	Q3TG	*	SUR-027-R	+
189	92	8	6.36E-10	0.93531	/CONT-LEAK	*	FA3	*	FAP	*	FS2	*
190					LAMBDA-AUX	*	Q3TG	*	RHRC003B-P-UUM	*	SUR-027-R	+
191	116	8	6.36E-10	0.93678	/CONT-LEAK	*	FA3	*	FAP	*	FS2	*
192					LAMBDA-AUX	*	Q3TG	*	RHRC02BB-P-NDUUM	*	SUR-027-R	+
193	3	8	6.22E-10	0.93821	CONT-LEAK	*	FA3	*	FAP	*	FS2	*
194					LAMBDA-AUX	*	Q3TG	*	RHRF98BX-XOC-LF	*	SUR-002-L	+
195	30	8	6.22E-10	0.93964	CONT-LEAK	*	FA3	*	FAP	*	FS2	*
196					LAMBDA-AUX	*	Q3TG	*	RHRF03BB-VOC-LF	*	SUR-002-L	+
197	23	9	6.22E-10	0.94108	CONT-LEAK	*	FA3	*	FAP	*	FS2	*
198					LAMBDA-AUX	*	NOFLOW-RHR-B1	*	Q3TG	*	RHR301BX-STR	*
199					SUR-002-L	+						
200	45	9	6.22E-10	0.94251	CONT-LEAK	*	FA3	*	FAP	*	FS2	*
201					LAMBDA-AUX	*	NOFLOW-RHR-B1	*	Q3TG	*	RHRF04BB-VOC-LF	*
202					SUR-002-L	+						
203	37	8	6.22E-10	0.94394	CONT-LEAK	*	FA3	*	FAP	*	FS2	*
204					LAMBDA-AUX	*	Q3TG	*	RHRF47BB-VOC-LF	*	SUR-002-L	+
205	17	8	5.66E-10	0.94525	C2DGF002-CCC-LF	*	CONT-LEAK	*	FA3	*	FAP	*
206					FS2	*	LAMBDA-AUX	*	Q3TG	*	SUR-002-L	+
207	16	8	5.66E-10	0.94655	CONT-LEAK	*	FA3	*	FAP	*	FS2	*
208					LAMBDA-AUX	*	Q3TG	*	RHRF31BX-CCC-LF	*	SUR-002-L	+
209	111	8	5.30E-10	0.94777	C2DG01P-PMS-CC	*	/CONT-LEAK	*	FA3	*	FAP	*
210					FS2	*	LAMBDA-AUX	*	Q3TG	*	SUR-027-R	+
211	61	8	5.30E-10	0.94899	/CONT-LEAK	*	FA3	*	FAP	*	FS2	*
212					LAMBDA-AUX	*	Q3TG	*	SEVY03CB-FMS-CC	*	SUR-027-R	+
213	118	8	5.30E-10	0.95021	/CONT-LEAK	*	FA3	*	FAP	*	FS2	*
214					LAMBDA-AUX	*	Q3TG	*	RHRB01BB-BOO-CC	*	SUR-027-R	+
215	234	8	4.75E-10	0.95131	C2DG01P-P-UUM	*	/CONT-LEAK	*	FA4	*	FAP	*
216					FS3	*	LAMBDA-AUX	*	Q3TG	*	SUR-027-R	+
217	236	8	4.75E-10	0.95240	/CONT-LEAK	*	FA4	*	FAP	*	FS3	*
218					LAMBDA-AUX	*	Q3TG	*	RHRC02BB-P-NDUUM	*	SUR-027-R	+
219	216	9	4.75E-10	0.95350	/CONT-LEAK	*	FA4	*	FAP	*	FS3	*
220					LAMBDA-AUX	*	Q3TG	*	RHRC02BB-P-UUM	*	SCSF06BB-DENER	*
221					SUR-027-R	+						
222	50	8	4.75E-10	0.95459	1EB16212-BCO	*	CONT-LEAK	*	FA3	*	FAP	*
223					FS2	*	LAMBDA-AUX	*	Q3TG	*	SUR-002-L	+
224	212	8	4.75E-10	0.95569	/CONT-LEAK	*	FA4	*	FAP	*	FS3	*
225					LAMBDA-AUX	*	Q3TG	*	RHRC003B-P-UUM	*	SUR-027-R	+

226	41	8	4.75E-10	0.95678	CCB2DG1P-BCO-LF	*	CONT-LEAK	*	FA3	*	FAP	*
227					FS2	*	LAMBDA-AUX	*	Q3TG	*	SUR-002-L	+
228	33	8	4.75E-10	0.95788	CONT-LEAK	*	CSCB068X-BCO-LF	*	FA3	*	FAP	*
229					FS2	*	LAMBDA-AUX	*	Q3TG	*	SUR-002-L	+
230	123	8	4.65E-10	0.95895	CONT-LEAK	*	FA4	*	FAP	*	FS3	*
231					LAMBDA-AUX	*	Q3TG	*	RHRF98BX-XOC-LF	*	SUR-002-L	+
232	157	8	4.65E-10	0.96002	CONT-LEAK	*	FA4	*	FAP	*	FS3	*
233					LAMBDA-AUX	*	Q3TG	*	RHRF47BB-VOC-LF	*	SUR-002-L	+
234	165	9	4.65E-10	0.96109	CONT-LEAK	*	FA4	*	FAP	*	FS3	*
235					LAMBDA-AUX	*	NOFLOW-RHR-B1	*	Q3TG	*	RHRF04BB-VOC-LF	*
236					SUR-002-L	+						
237	150	8	4.65E-10	0.96216	CONT-LEAK	*	FA4	*	FAP	*	FS3	*
238					LAMBDA-AUX	*	Q3TG	*	RHRF03BB-VOC-LF	*	SUR-002-L	+
239	143	9	4.65E-10	0.96323	CONT-LEAK	*	FA4	*	FAP	*	FS3	*
240					LAMBDA-AUX	*	NOFLOW-RHR-B1	*	Q3TG	*	RHR301BX-STR	*
241					SUR-002-L	+						
242	21	9	4.24E-10	0.96420	CONT-LEAK	*	FA3	*	FAP	*	FS2	*
243					LAMBDA-AUX	*	LPCI-MOV-BETA	*	LPCI-MOV-CM2	*	Q3TG	*
244					SUR-002-L	+						
245	20	9	4.24E-10	0.96518	CONT-LEAK	*	FA3	*	FAP	*	FS2	*
246					LAMBDA-AUX	*	LPCI-MOV-BETA	*	LPCI-MOV-CM1	*	Q3TG	*
247					SUR-002-L	+						
248	136	8	4.22E-10	0.96615	CONT-LEAK	*	FA4	*	FAP	*	FS3	*
249					LAMBDA-AUX	*	Q3TG	*	RHRF31BX-CCC-LF	*	SUR-002-L	+
250	137	8	4.22E-10	0.96713	C2DGF002-CCC-LF	*	CONT-LEAK	*	FA4	*	FAP	*
251					FS3	*	LAMBDA-AUX	*	Q3TG	*	SUR-002-L	+
252	60	8	4.07E-10	0.96806	1EB2Y22X-BCO	*	CONT-LEAK	*	FA3	*	FAP	*
253					FS2	*	LAMBDA-AUX	*	Q3TG	*	SUR-002-L	+
254	26	8	4.07E-10	0.96900	1EB36XB-BCO-LF	*	CONT-LEAK	*	FA3	*	FAP	*
255					FS2	*	LAMBDA-AUX	*	Q3TG	*	SUR-002-L	+
256	48	8	4.07E-10	0.96994	1EB36Y1X-BCO-LF	*	CONT-LEAK	*	FA3	*	FAP	*
257					FS2	*	LAMBDA-AUX	*	Q3TG	*	SUR-002-L	+
258	38	8	4.07E-10	0.97088	1EB36YB-BCO-LF	*	CONT-LEAK	*	FA3	*	FAP	*
259					FS2	*	LAMBDA-AUX	*	Q3TG	*	SUR-002-L	+
260	57	8	4.07E-10	0.97182	1EB212YX-BCO-LF	*	CONT-LEAK	*	FA3	*	FAP	*
261					FS2	*	LAMBDA-AUX	*	Q3TG	*	SUR-002-L	+
262	35	8	4.07E-10	0.97275	1EB236B-BCO-LF	*	CONT-LEAK	*	FA3	*	FAP	*
263					FS2	*	LAMBDA-AUX	*	Q3TG	*	SUR-002-L	+
264	39	8	4.07E-10	0.97369	CONT-LEAK	*	FA3	*	FAP	*	FS2	*
265					LAMBDA-AUX	*	Q3TG	*	SEVB001X-BCO-LF	*	SUR-002-L	+
266	231	8	3.96E-10	0.97460	C2DG01P-FMS-CC	*	/CONT-LEAK	*	FA4	*	FAP	*
267					FS3	*	LAMBDA-AUX	*	Q3TG	*	SUR-027-R	+
268	238	8	3.96E-10	0.97552	/CONT-LEAK	*	FA4	*	FAP	*	FS3	*
269					LAMBDA-AUX	*	Q3TG	*	RHRB01BB-BOO-CC	*	SUR-027-R	+
270	181	8	3.96E-10	0.97643	/CONT-LEAK	*	FA4	*	FAP	*	FS3	*
271					LAMBDA-AUX	*	Q3TG	*	SEVY03CB-FMS-CC	*	SUR-027-R	+

272	170	8	3.55E-10	0.97724	1EB16212-BCO	*	CONT-LEAK	*	FA4	*	FAP	*
273					FS3	*	LAMBDA-AUX	*	Q3TG	*	SUR-002-L	+
274	161	8	3.55E-10	0.97806	CCB2DG1P-BCO-LF	*	CONT-LEAK	*	FA4	*	FAP	*
275					FS3	*	LAMBDA-AUX	*	Q3TG	*	SUR-002-L	+
276	153	8	3.55E-10	0.97888	CONT-LEAK	*	CSCB068X-BCO-LF	*	FA4	*	FAP	*
277					FS3	*	LAMBDA-AUX	*	Q3TG	*	SUR-002-L	+
278	141	9	3.17E-10	0.97961	CONT-LEAK	*	FA4	*	FAP	*	FS3	*
279					LAMBDA-AUX	*	LPCI-MOV-BETA	*	LPCI-MOV-CM2	*	Q3TG	*
280					SUR-002-L	+						
281	140	9	3.17E-10	0.98034	CONT-LEAK	*	FA4	*	FAP	*	FS3	*
282					LAMBDA-AUX	*	LPCI-MOV-BETA	*	LPCI-MOV-CM1	*	Q3TG	*
283					SUR-002-L	+						
284	180	8	3.04E-10	0.98104	1EB2Y22X-BCO	*	CONT-LEAK	*	FA4	*	FAP	*
285					FS3	*	LAMBDA-AUX	*	Q3TG	*	SUR-002-L	+
286	177	8	3.04E-10	0.98174	1EB212YX-BCO-LF	*	CONT-LEAK	*	FA4	*	FAP	*
287					FS3	*	LAMBDA-AUX	*	Q3TG	*	SUR-002-L	+
288	168	8	3.04E-10	0.98244	1EB36Y1X-BCO-LF	*	CONT-LEAK	*	FA4	*	FAP	*
289					FS3	*	LAMBDA-AUX	*	Q3TG	*	SUR-002-L	+
290	159	8	3.04E-10	0.98314	CONT-LEAK	*	FA4	*	FAP	*	FS3	*
291					LAMBDA-AUX	*	Q3TG	*	SEVB001X-BCO-LF	*	SUR-002-L	+
292	158	8	3.04E-10	0.98384	1EB36YB-BCO-LF	*	CONT-LEAK	*	FA4	*	FAP	*
293					FS3	*	LAMBDA-AUX	*	Q3TG	*	SUR-002-L	+
294	155	8	3.04E-10	0.98454	1EB236B-BCO-LF	*	CONT-LEAK	*	FA4	*	FAP	*
295					FS3	*	LAMBDA-AUX	*	Q3TG	*	SUR-002-L	+
296	146	8	3.04E-10	0.98524	1EB36XB-BCO-LF	*	CONT-LEAK	*	FA4	*	FAP	*
297					FS3	*	LAMBDA-AUX	*	Q3TG	*	SUR-002-L	+
298	109	8	2.55E-10	0.98583	/CONT-LEAK	*	CSCD300B-PLG-LF	*	FA3	*	FAP	*
299					FS2	*	LAMBDA-AUX	*	Q3TG	*	SUR-027-R	+
300	102	8	2.33E-10	0.98637	/CONT-LEAK	*	FA3	*	FAP	*	FS2	*
301					LAMBDA-AUX	*	Q3TG	*	RHRC02BB-PMS-LF	*	SUR-027-R	+
302	113	8	2.33E-10	0.98690	C2DG01P-PMS-LF	*	/CONT-LEAK	*	FA3	*	FAP	*
303					FS2	*	LAMBDA-AUX	*	Q3TG	*	SUR-027-R	+
304	229	8	1.90E-10	0.98734	/CONT-LEAK	*	CSCD300B-PLG-LF	*	FA4	*	FAP	*
305					FS3	*	LAMBDA-AUX	*	Q3TG	*	SUR-027-R	+
306	73	8	1.78E-10	0.98775	/CONT-LEAK	*	FA3	*	FAP	*	FS2	*
307					LAMBDA-AUX	*	Q3TG	*	SEVY03AX-ACX-LFI	*	SUR-027-R	+
308	233	8	1.74E-10	0.98815	C2DG01P-PMS-LF	*	/CONT-LEAK	*	FA4	*	FAP	*
309					FS3	*	LAMBDA-AUX	*	Q3TG	*	SUR-027-R	+
310	222	8	1.74E-10	0.98855	/CONT-LEAK	*	FA4	*	FAP	*	FS3	*
311					LAMBDA-AUX	*	Q3TG	*	RHRC02BB-PMS-LF	*	SUR-027-R	+
312	115	9	1.53E-10	0.98891	1EDC2DEP-FROP-4	*	/CONT-LEAK	*	EE-C2DG01F-PLG	*	FA3	*
313					FAP	*	FS2	*	LAMBDA-AUX	*	Q3TG	*
314					SUR-027-R	+						
315	94	9	1.53E-10	0.98926	1EDC2DEP-FROP-4	*	/CONT-LEAK	*	EE-CSCD300B-PLG	*	FA3	*
316					FAP	*	FS2	*	LAMBDA-AUX	*	Q3TG	*
317					SUR-027-R	+						

318	18	9	1.36E-10	0.98957	CONT-LEAK	*	FA3	*	FAP	*	FLOW-RHR-B3	*
319					FS2	*	LAMBDA-AUX	*	Q3TG	*	RHRB03BX-BCO-LF	*
320					SUR-002-L	+						
321	193	8	1.33E-10	0.98988	/CONT-LEAK	*	FA4	*	FAP	*	FS3	*
322					LAMBDA-AUX	*	Q3TG	*	SEVY03AX-ACX-LFI	*	SUR-027-R	+
323	74	8	1.23E-10	0.99016	C2DG01F-PLG-LF	*	/CONT-LEAK	*	FA3	*	FAP	*
324					FS2	*	LAMBDA-AUX	*	Q3TG	*	SUR-027-R	+
325	88	8	1.15E-10	0.99042	/CONT-LEAK	*	FA3	*	FAP	*	FS2	*
326					LAMBDA-AUX	*	Q3TG	*	SEVY03CB-FMS-LF	*	SUR-027-R	+
327	235	9	1.14E-10	0.99069	1EDC2DEP-FROP-4	*	/CONT-LEAK	*	EE-C2DG01F-PLG	*	FA4	*
328					FAP	*	FS3	*	LAMBDA-AUX	*	Q3TG	*
329					SUR-027-R	+						
330	214	9	1.14E-10	0.99095	1EDC2DEP-FROP-4	*	/CONT-LEAK	*	EE-CSCD300B-PLG	*	FA4	*
331					FAP	*	FS3	*	LAMBDA-AUX	*	Q3TG	*
332					SUR-027-R	+						
333	107	8	1.06E-10	0.99119	/CONT-LEAK	*	CSCF068B-VCC-LF	*	FA3	*	FAP	*
334					FS2	*	LAMBDA-AUX	*	Q3TG	*	SUR-027-R	+
335	66	8	1.06E-10	0.99144	2DG1PK18-ROO-LFO	*	/CONT-LEAK	*	FA3	*	FAP	*
336					FS2	*	LAMBDA-AUX	*	Q3TG	*	SUR-027-R	+
337	112	8	1.06E-10	0.99168	/CONT-LEAK	*	FA3	*	FAP	*	FS2	*
338					LAMBDA-AUX	*	Q3TG	*	SEVY03CB-F-UUM	*	SUR-027-R	+
339	72	9	1.06E-10	0.99193	/CONT-LEAK	*	FA3	*	FAP	*	FLOW-RHR-B3	*
340					FS2	*	LAMBDA-AUX	*	Q3TG	*	RHRF48BB-VOO-LF	*
341					SUR-027-R	+						
342	71	8	1.06E-10	0.99217	/CONT-LEAK	*	FA3	*	FAP	*	FS2	*
343					LAMBDA-AUX	*	Q3TG	*	RHRB01BB-BOO-LF	*	SUR-027-R	+
344	138	9	1.01E-10	0.99240	CONT-LEAK	*	FA4	*	FAP	*	FLOW-RHR-B3	*
345					FS3	*	LAMBDA-AUX	*	Q3TG	*	RHRB03BX-BCO-LF	*
346					SUR-002-L	+						
347	194	8	9.19E-11	0.99261	C2DG01F-PLG-LF	*	/CONT-LEAK	*	FA4	*	FAP	*
348					FS3	*	LAMBDA-AUX	*	Q3TG	*	SUR-027-R	+
349	208	8	8.55E-11	0.99281	/CONT-LEAK	*	FA4	*	FAP	*	FS3	*
350					LAMBDA-AUX	*	Q3TG	*	SEVY03CB-FMS-LF	*	SUR-027-R	+
351	232	8	7.92E-11	0.99299	/CONT-LEAK	*	FA4	*	FAP	*	FS3	*
352					LAMBDA-AUX	*	Q3TG	*	SEVY03CB-F-UUM	*	SUR-027-R	+
353	227	8	7.92E-11	0.99318	/CONT-LEAK	*	CSCF068B-VCC-LF	*	FA4	*	FAP	*
354					FS3	*	LAMBDA-AUX	*	Q3TG	*	SUR-027-R	+
355	192	9	7.92E-11	0.99336	/CONT-LEAK	*	FA4	*	FAP	*	FLOW-RHR-B3	*
356					FS3	*	LAMBDA-AUX	*	Q3TG	*	RHRF48BB-VOO-LF	*
357					SUR-027-R	+						
358	191	8	7.92E-11	0.99354	/CONT-LEAK	*	FA4	*	FAP	*	FS3	*
359					LAMBDA-AUX	*	Q3TG	*	RHRB01BB-BOO-LF	*	SUR-027-R	+
360	186	8	7.92E-11	0.99372	2DG1PK18-ROO-LFO	*	/CONT-LEAK	*	FA4	*	FAP	*
361					FS3	*	LAMBDA-AUX	*	Q3TG	*	SUR-027-R	+
362	62	9	6.36E-11	0.99387	/CONT-LEAK	*	FA3	*	FAP	*	FS2	*
363					LAMBDA-AUX	*	Q3TG	*	RHRF47BB-V-UUM	*	SCSF06BB-DENER	*
364					SUR-027-R	+						

365	119	8	6.36E-11	0.99402	/CONT-LEAK	*	FA3	*	FAP	*	FS2	*
366					LAMBDA-AUX	*	Q3TG	*	RHRF87BB-V-UUM	*	SUR-027-R	+
367	106	9	6.36E-11	0.99416	/CONT-LEAK	*	FA3	*	FAP	*	FS2	*
368					LAMBDA-AUX	*	Q3TG	*	RHRF88BX-R-UUM	*	SCSF06BB-DENER	*
369					SUR-027-R	+						
370	104	8	6.36E-11	0.99431	2DG01PSC-OOO-LFO	*	/CONT-LEAK	*	FA3	*	FAP	*
371					FS2	*	LAMBDA-AUX	*	Q3TG	*	SUR-027-R	+
372	100	8	6.36E-11	0.99446	C2DG01F-S-UUM	*	/CONT-LEAK	*	FA3	*	FAP	*
373					FS2	*	LAMBDA-AUX	*	Q3TG	*	SUR-027-R	+
374	103	8	6.36E-11	0.99460	/CONT-LEAK	*	FA3	*	FAP	*	FS2	*
375					LAMBDA-AUX	*	Q3TG	*	RHRF65BB-N-UUM	*	SUR-027-R	+
376	91	8	6.36E-11	0.99475	/CONT-LEAK	*	FA3	*	FAP	*	FS2	*
377					LAMBDA-AUX	*	Q3TG	*	SCSF06BB-V-UUM	*	SUR-027-R	+
378	89	8	6.36E-11	0.99490	/CONT-LEAK	*	CSCF068B-V-UUM	*	FA3	*	FAP	*
379					FS2	*	LAMBDA-AUX	*	Q3TG	*	SUR-027-R	+
380	87	9	6.36E-11	0.99504	/CONT-LEAK	*	FA3	*	FAP	*	FLOW-RHR-B3	*
381					FS2	*	LAMBDA-AUX	*	Q3TG	*	RHRF48BB-V-UUM	*
382					SUR-027-R	+						
383	85	9	6.36E-11	0.99519	/CONT-LEAK	*	FA3	*	FAP	*	FS2	*
384					LAMBDA-AUX	*	Q3TG	*	RHRF64BB-V-UUM	*	SCSF06BB-DENER	*
385					SUR-027-R	+						
386	84	8	6.36E-11	0.99534	/CONT-LEAK	*	FA3	*	FAP	*	FS2	*
387					LAMBDA-AUX	*	Q3TG	*	RHRF74BB-V-UUM	*	SUR-027-R	+
388	82	8	6.36E-11	0.99548	2DG01PK18CA-LFOO	*	/CONT-LEAK	*	FA3	*	FAP	*
389					FS2	*	LAMBDA-AUX	*	Q3TG	*	SUR-027-R	+
390	70	8	6.36E-11	0.99563	/CONT-LEAK	*	CSCD300B-S-UUM	*	FA3	*	FAP	*
391					FS2	*	LAMBDA-AUX	*	Q3TG	*	SUR-027-R	+
392	69	8	6.36E-11	0.99578	/CONT-LEAK	*	FA3	*	FAP	*	FS2	*
393					LAMBDA-AUX	*	Q3TG	*	SEVY03AX-A-UUM	*	SUR-027-R	+
394	68	8	6.36E-11	0.99592	/CONT-LEAK	*	FA3	*	FAP	*	FS2	*
395					LAMBDA-AUX	*	Q3TG	*	RHRF60BB-S-UUM	*	SUR-027-R	+
396	67	8	6.36E-11	0.99607	/CONT-LEAK	*	FA3	*	FAP	*	FS2	*
397					LAMBDA-AUX	*	Q3TG	*	RHRH01BX-H-UUM	*	SUR-027-R	+
398	65	8	6.36E-11	0.99622	/CONT-LEAK	*	FA3	*	FAP	*	FS2	*
399					LAMBDA-AUX	*	Q3TG	*	RHRF55BX-R-UUM	*	SUR-027-R	+
400	64	8	6.36E-11	0.99636	/CONT-LEAK	*	FA3	*	FAP	*	FS2	*
401					LAMBDA-AUX	*	Q3TG	*	RHRF51BB-N-UUM	*	SUR-027-R	+
402	79	9	5.83E-11	0.99650	/CONT-LEAK	*	FA3	*	FAP	*	FS2	*
403					LAMBDA-AUX	*	LPCI-BETA	*	LPCI-PMS-CM	*	Q3TG	*
404					SUR-027-R	+						
405	239	8	4.75E-11	0.99661	/CONT-LEAK	*	FA4	*	FAP	*	FS3	*
406					LAMBDA-AUX	*	Q3TG	*	RHRF87BB-V-UUM	*	SUR-027-R	+
407	226	9	4.75E-11	0.99672	/CONT-LEAK	*	FA4	*	FAP	*	FS3	*
408					LAMBDA-AUX	*	Q3TG	*	RHRF88BX-R-UUM	*	SCSF06BB-DENER	*
409					SUR-027-R	+						
410	224	8	4.75E-11	0.99682	2DG01PSC-OOO-LFO	*	/CONT-LEAK	*	FA4	*	FAP	*
411					FS3	*	LAMBDA-AUX	*	Q3TG	*	SUR-027-R	+

412	223	8	4.75E-11	0.99693	/CONT-LEAK	*	FA4	*	FAP	*	FS3	*
413					LAMBDA-AUX	*	Q3TG	*	RHRF65BB-N-UUM	*	SUR-027-R	+
414	220	8	4.75E-11	0.99704	C2DG01F-S-UUM	*	/CONT-LEAK	*	FA4	*	FAP	*
415					FS3	*	LAMBDA-AUX	*	Q3TG	*	SUR-027-R	+
416	211	8	4.75E-11	0.99715	/CONT-LEAK	*	FA4	*	FAP	*	FS3	*
417					LAMBDA-AUX	*	Q3TG	*	SCSF06BB-V-UUM	*	SUR-027-R	+
418	209	8	4.75E-11	0.99726	/CONT-LEAK	*	CSCF068B-V-UUM	*	FA4	*	FAP	*
419					FS3	*	LAMBDA-AUX	*	Q3TG	*	SUR-027-R	+
420	207	9	4.75E-11	0.99737	/CONT-LEAK	*	FA4	*	FAP	*	FLOW-RHR-B3	*
421					FS3	*	LAMBDA-AUX	*	Q3TG	*	RHRF48BB-V-UUM	*
422					SUR-027-R	+						
423	205	9	4.75E-11	0.99748	/CONT-LEAK	*	FA4	*	FAP	*	FS3	*
424					LAMBDA-AUX	*	Q3TG	*	RHRF64BB-V-UUM	*	SCSF06BB-DENER	*
425					SUR-027-R	+						
426	204	8	4.75E-11	0.99759	/CONT-LEAK	*	FA4	*	FAP	*	FS3	*
427					LAMBDA-AUX	*	Q3TG	*	RHRF74BB-V-UUM	*	SUR-027-R	+
428	202	8	4.75E-11	0.99770	2DG01PK18CA-LFOO	*	/CONT-LEAK	*	FA4	*	FAP	*
429					FS3	*	LAMBDA-AUX	*	Q3TG	*	SUR-027-R	+
430	190	8	4.75E-11	0.99781	/CONT-LEAK	*	CSCD300B-S-UUM	*	FA4	*	FAP	*
431					FS3	*	LAMBDA-AUX	*	Q3TG	*	SUR-027-R	+
432	189	8	4.75E-11	0.99792	/CONT-LEAK	*	FA4	*	FAP	*	FS3	*
433					LAMBDA-AUX	*	Q3TG	*	SEVY03AX-A-UUM	*	SUR-027-R	+
434	188	8	4.75E-11	0.99803	/CONT-LEAK	*	FA4	*	FAP	*	FS3	*
435					LAMBDA-AUX	*	Q3TG	*	RHRF60BB-S-UUM	*	SUR-027-R	+
436	187	8	4.75E-11	0.99814	/CONT-LEAK	*	FA4	*	FAP	*	FS3	*
437					LAMBDA-AUX	*	Q3TG	*	RHRH01BX-H-UUM	*	SUR-027-R	+
438	185	8	4.75E-11	0.99825	/CONT-LEAK	*	FA4	*	FAP	*	FS3	*
439					LAMBDA-AUX	*	Q3TG	*	RHRF55BX-R-UUM	*	SUR-027-R	+
440	184	8	4.75E-11	0.99836	/CONT-LEAK	*	FA4	*	FAP	*	FS3	*
441					LAMBDA-AUX	*	Q3TG	*	RHRF51BB-N-UUM	*	SUR-027-R	+
442	182	9	4.75E-11	0.99847	/CONT-LEAK	*	FA4	*	FAP	*	FS3	*
443					LAMBDA-AUX	*	Q3TG	*	RHRF47BB-V-UUM	*	SCSF06BB-DENER	*
444					SUR-027-R	+						
445	199	9	4.36E-11	0.99857	/CONT-LEAK	*	FA4	*	FAP	*	FS3	*
446					LAMBDA-AUX	*	LPCI-BETA	*	LPCI-PMS-CM	*	Q3TG	*
447					SUR-027-R	+						
448	63	8	2.33E-11	0.99862	/CONT-LEAK	*	FA3	*	FAP	*	FS2	*
449					LAMBDA-AUX	*	Q3TG	*	RHRF98BX-XOC-LF	*	SUR-027-R	+
450	105	9	2.33E-11	0.99867	/CONT-LEAK	*	FA3	*	FAP	*	FS2	*
451					LAMBDA-AUX	*	NOFLOW-RHR-B1	*	Q3TG	*	RHRF04BB-VOC-LF	*
452					SUR-027-R	+						
453	97	8	2.33E-11	0.99873	/CONT-LEAK	*	FA3	*	FAP	*	FS2	*
454					LAMBDA-AUX	*	Q3TG	*	RHRF47BB-VOC-LF	*	SUR-027-R	+
455	90	8	2.33E-11	0.99878	/CONT-LEAK	*	FA3	*	FAP	*	FS2	*
456					LAMBDA-AUX	*	Q3TG	*	RHRF03BB-VOC-LF	*	SUR-027-R	+

457	83	9	2.33E-11	0.99884	/CONT-LEAK	*	FA3	*	FAP	*	FS2	*
458					LAMBDA-AUX	*	NOFLOW-RHR-B1	*	Q3TG	*	RHR301BX-STR	*
459					SUR-027-R	+						
460	77	8	2.12E-11	0.99888	C2DGF002-CCC-LF	*	/CONT-LEAK	*	FA3	*	FAP	*
461					FS2	*	LAMBDA-AUX	*	Q3TG	*	SUR-027-R	+
462	76	8	2.12E-11	0.99893	/CONT-LEAK	*	FA3	*	FAP	*	FS2	*
463					LAMBDA-AUX	*	Q3TG	*	RHRF31BX-CCC-LF	*	SUR-027-R	+
464	110	8	1.78E-11	0.99897	1EB16212-BCO	*	/CONT-LEAK	*	FA3	*	FAP	*
465					FS2	*	LAMBDA-AUX	*	Q3TG	*	SUR-027-R	+
466	101	8	1.78E-11	0.99902	CCB2DG1P-BCO-LF	*	/CONT-LEAK	*	FA3	*	FAP	*
467					FS2	*	LAMBDA-AUX	*	Q3TG	*	SUR-027-R	+
468	93	8	1.78E-11	0.99906	/CONT-LEAK	*	CSCB068X-BCO-LF	*	FA3	*	FAP	*
469					FS2	*	LAMBDA-AUX	*	Q3TG	*	SUR-027-R	+
470	225	9	1.74E-11	0.99910	/CONT-LEAK	*	FA4	*	FAP	*	FS3	*
471					LAMBDA-AUX	*	NOFLOW-RHR-B1	*	Q3TG	*	RHRF04BB-VOC-LF	*
472					SUR-027-R	+						
473	217	8	1.74E-11	0.99914	/CONT-LEAK	*	FA4	*	FAP	*	FS3	*
474					LAMBDA-AUX	*	Q3TG	*	RHRF47BB-VOC-LF	*	SUR-027-R	+
475	210	8	1.74E-11	0.99918	/CONT-LEAK	*	FA4	*	FAP	*	FS3	*
476					LAMBDA-AUX	*	Q3TG	*	RHRF03BB-VOC-LF	*	SUR-027-R	+
477	203	9	1.74E-11	0.99922	/CONT-LEAK	*	FA4	*	FAP	*	FS3	*
478					LAMBDA-AUX	*	NOFLOW-RHR-B1	*	Q3TG	*	RHR301BX-STR	*
479					SUR-027-R	+						
480	183	8	1.74E-11	0.99926	/CONT-LEAK	*	FA4	*	FAP	*	FS3	*
481					LAMBDA-AUX	*	Q3TG	*	RHRF98BX-XOC-LF	*	SUR-027-R	+
482	81	9	1.59E-11	0.99929	/CONT-LEAK	*	FA3	*	FAP	*	FS2	*
483					LAMBDA-AUX	*	LPCI-MOV-BETA	*	LPCI-MOV-CM2	*	Q3TG	*
484					SUR-027-R	+						
485	80	9	1.59E-11	0.99933	/CONT-LEAK	*	FA3	*	FAP	*	FS2	*
486					LAMBDA-AUX	*	LPCI-MOV-BETA	*	LPCI-MOV-CM1	*	Q3TG	*
487					SUR-027-R	+						
488	197	8	1.58E-11	0.99937	C2DGF002-CCC-LF	*	/CONT-LEAK	*	FA4	*	FAP	*
489					FS3	*	LAMBDA-AUX	*	Q3TG	*	SUR-027-R	+
490	196	8	1.58E-11	0.99940	/CONT-LEAK	*	FA4	*	FAP	*	FS3	*
491					LAMBDA-AUX	*	Q3TG	*	RHRF31BX-CCC-LF	*	SUR-027-R	+
492	120	8	1.53E-11	0.99944	1EB2Y22X-BCO	*	/CONT-LEAK	*	FA3	*	FAP	*
493					FS2	*	LAMBDA-AUX	*	Q3TG	*	SUR-027-R	+
494	117	8	1.53E-11	0.99947	1EB212YX-BCO-LF	*	/CONT-LEAK	*	FA3	*	FAP	*
495					FS2	*	LAMBDA-AUX	*	Q3TG	*	SUR-027-R	+
496	108	8	1.53E-11	0.99951	1EB36Y1X-BCO-LF	*	/CONT-LEAK	*	FA3	*	FAP	*
497					FS2	*	LAMBDA-AUX	*	Q3TG	*	SUR-027-R	+
498	98	8	1.53E-11	0.99954	1EB36YB-BCO-LF	*	/CONT-LEAK	*	FA3	*	FAP	*
499					FS2	*	LAMBDA-AUX	*	Q3TG	*	SUR-027-R	+
500	95	8	1.53E-11	0.99958	1EB236B-BCO-LF	*	/CONT-LEAK	*	FA3	*	FAP	*
501					FS2	*	LAMBDA-AUX	*	Q3TG	*	SUR-027-R	+

502	86	8	1.53E-11	0.99961	1EB36XB-BCO-LF	*	/CONT-LEAK	*	FA3	*	FAP	*
503					FS2	*	LAMBDA-AUX	*	Q3TG	*	SUR-027-R	+
504	99	8	1.53E-11	0.99965	/CONT-LEAK	*	FA3	*	FAP	*	FS2	*
505					LAMBDA-AUX	*	Q3TG	*	SEVB001X-BCO-LF	*	SUR-027-R	+
506	230	8	1.33E-11	0.99968	1EB16212-BCO	*	/CONT-LEAK	*	FA4	*	FAP	*
507					FS3	*	LAMBDA-AUX	*	Q3TG	*	SUR-027-R	+
508	221	8	1.33E-11	0.99971	CCB2DG1P-BCO-LF	*	/CONT-LEAK	*	FA4	*	FAP	*
509					FS3	*	LAMBDA-AUX	*	Q3TG	*	SUR-027-R	+
510	213	8	1.33E-11	0.99974	/CONT-LEAK	*	CSCB068X-BCO-LF	*	FA4	*	FAP	*
511					FS3	*	LAMBDA-AUX	*	Q3TG	*	SUR-027-R	+
512	201	9	1.19E-11	0.99977	/CONT-LEAK	*	FA4	*	FAP	*	FS3	*
513					LAMBDA-AUX	*	LPCI-MOV-BETA	*	LPCI-MOV-CM2	*	Q3TG	*
514					SUR-027-R	+						
515	200	9	1.19E-11	0.99980	/CONT-LEAK	*	FA4	*	FAP	*	FS3	*
516					LAMBDA-AUX	*	LPCI-MOV-BETA	*	LPCI-MOV-CM1	*	Q3TG	*
517					SUR-027-R	+						
518	240	8	1.14E-11	0.99982	1EB2Y22X-BCO	*	/CONT-LEAK	*	FA4	*	FAP	*
519					FS3	*	LAMBDA-AUX	*	Q3TG	*	SUR-027-R	+
520	237	8	1.14E-11	0.99985	1EB212YX-BCO-LF	*	/CONT-LEAK	*	FA4	*	FAP	*
521					FS3	*	LAMBDA-AUX	*	Q3TG	*	SUR-027-R	+
522	228	8	1.14E-11	0.99987	1EB36Y1X-BCO-LF	*	/CONT-LEAK	*	FA4	*	FAP	*
523					FS3	*	LAMBDA-AUX	*	Q3TG	*	SUR-027-R	+
524	218	8	1.14E-11	0.99990	1EB36YB-BCO-LF	*	/CONT-LEAK	*	FA4	*	FAP	*
525					FS3	*	LAMBDA-AUX	*	Q3TG	*	SUR-027-R	+
526	215	8	1.14E-11	0.99993	1EB236B-BCO-LF	*	/CONT-LEAK	*	FA4	*	FAP	*
527					FS3	*	LAMBDA-AUX	*	Q3TG	*	SUR-027-R	+
528	206	8	1.14E-11	0.99995	1EB36XB-BCO-LF	*	/CONT-LEAK	*	FA4	*	FAP	*
529					FS3	*	LAMBDA-AUX	*	Q3TG	*	SUR-027-R	+
530	219	8	1.14E-11	0.99998	/CONT-LEAK	*	FA4	*	FAP	*	FS3	*
531					LAMBDA-AUX	*	Q3TG	*	SEVB001X-BCO-LF	*	SUR-027-R	+
532	78	9	5.09E-12	0.99999	/CONT-LEAK	*	FA3	*	FAP	*	FLOW-RHR-B3	*
533					FS2	*	LAMBDA-AUX	*	Q3TG	*	RHRB03BX-BCO-LF	*
534					SUR-027-R	+						
535	198	9	3.80E-12	1.00000	/CONT-LEAK	*	FA4	*	FAP	*	FLOW-RHR-B3	*
536					FS3	*	LAMBDA-AUX	*	Q3TG	*	RHRB03BX-BCO-LF	*
537					SUR-027-R							

TEMAC RUN TIME IN CPU SECONDS 401.86

FIRE-S-AA SEQUENCE

TOP EVENT FIRE-S-AA CONTAINS 23 EVENTS IN 36 CUT SETS

THE FREQUENCY OF TOP EVENT FIRE-S-AA IS 3.34E-09

DESCRIPTIVE STATISTICS FOR THE FREQUENCY OF TOP EVENT FIRE-S-AA

N	400
MEAN	5.94E-09
STD DEV	2.54E-08
LOWER 5%	0.00E+00
LOWER 25%	0.00E+00
MEDIAN	0.00E+00
UPPER 25%	9.44E-10
UPPER 5%	2.72E-08

90% UNCERTAINTY INTERVAL FOR TOP EVENT FREQUENCY (INNERMOST BRACKETS DENOTE INTERQUARTILE RANGE, ASTERISK DENOTES MEDIAN, N DENOTES NOMINAL VALUE AND M DENOTES MEAN)

NOMENCLATURE:

PD = PARTIAL DERIVATIVE

TEF = FREQUENCY OF THE TOP EVENT

EV(J) = PROBABILITY OF EVENT J FOR BASE EVENTS
= FREQUENCY OF EVENT J FOR INITIATING EVENTS

MEASURES:

1. FOR BASE EVENTS AND INITIATING EVENTS:

RISK REDUCTION = PD x EV(J)
= TEF - TEF(EVALUATED WITH EV(J) = 0)

2. FOR BASE EVENTS ONLY:

RISK INCREASE = PD - RISK REDUCTION
= PD x (1 - EV(J))
= TEF(EVALUATED WITH EV(J) = 1) - TEF

FIRE-S-AA SEQUENCE
RISK REDUCTION BY BASE EVENT (WITH ASSOCIATED UNCERTAINTY INTERVALS)

BASE EVENT	OCCUR	PROB	(RANK)	RISK REDUCTION	(RANK)	LOWER 5%	UPPER 5%
FA10	36	1.10E-01	(9.0)	3.34E-09	(3.5)	0.00E+00	2.72E-08
LAMBDA-AUX	36	5.40E-02	(10.0)	3.34E-09	(3.5)	0.00E+00	2.72E-08
FAS	36	2.20E-02	(12.0)	3.34E-09	(3.5)	0.00E+00	2.72E-08
NLOSP	36	1.00E+00	(2.5)	3.34E-09	(3.5)		
Q12TG	36	9.70E-01	(5.0)	3.34E-09	(3.5)	0.00E+00	2.72E-08
FS2	36	3.00E-01	(7.0)	3.34E-09	(3.5)	0.00E+00	2.72E-08
SUR-002-L	18	1.60E-01	(8.0)	3.21E-09	(7.0)	0.00E+00	2.72E-08
CONT-LEAK	36	7.50E-01	(6.0)	2.85E-09	(8.0)	0.00E+00	2.72E-08
DG2A-GEN-LF-FTS	18	2.50E-02	(11.0)	1.89E-09	(9.0)	0.00E+00	1.89E-08
DG2A-GEN-LF-FTR	18	1.90E-02	(13.0)	1.44E-09	(10.0)	0.00E+00	8.69E-09
RHRH01AX-HTX-LFB	4	6.20E-03	(15.0)	1.29E-09	(11.0)	0.00E+00	9.02E-09
LCSC002A-P-UUM	4	3.00E-03	(16.5)	6.25E-10	(13.0)	0.00E+00	3.29E-09
SCSF06AA-DENER	4	1.00E+00	(2.5)	6.25E-10	(13.0)		
RHRC02AA-P-UUM	4	3.00E-03	(16.5)	6.25E-10	(13.0)	0.00E+00	3.29E-09
CODG01P-PMS-LF	4	1.10E-03	(18.5)	2.29E-10	(15.5)	0.00E+00	1.51E-09
RHRC02AA-PMS-LF	4	1.10E-03	(18.5)	2.29E-10	(15.5)	0.00E+00	1.51E-09
SUR-027-R	18	1.80E-02	(14.0)	1.21E-10	(17.0)	0.00E+00	1.71E-09
CSCF068A-VCC-LF	4	5.00E-04	(21.0)	1.04E-10	(19.5)	0.00E+00	5.78E-10
RHRF48AA-VOO-LF	4	5.00E-04	(21.0)	1.04E-10	(19.5)	0.00E+00	5.78E-10
RHRB01AA-BOO-LF	4	5.00E-04	(21.0)	1.04E-10	(19.5)	0.00E+00	5.76E-10
FLOW-RHR-A3	4	1.00E+00	(2.5)	1.04E-10	(19.5)		
RHR301AX-STR	4	1.10E-04	(23.0)	2.29E-11	(22.5)	0.00E+00	9.17E-11
NOFLOW-RHR-A1	4	1.00E+00	(2.5)	2.29E-11	(22.5)		

FIRE-S-AA SEQUENCE
RISK INCREASE BY BASE EVENT (WITH ASSOCIATED UNCERTAINTY INTERVALS)

BASE EVENT	OCCUR	PROB	(RANK)	RISK INCREASE	(RANK)	LOWER 5%	UPPER 5%
RHR301AX-STR	4	1.10E-04	(23.0)	2.08E-07	(1.0)	0.00E+00	2.66E-06
RHRB01AA-BOO-LF	4	5.00E-04	(21.0)	2.08E-07	(3.0)	0.00E+00	2.66E-06
RHRF48AA-VOO-LF	4	5.00E-04	(21.0)	2.08E-07	(3.0)	0.00E+00	2.66E-06
CSCF068A-VCC-LF	4	5.00E-04	(21.0)	2.08E-07	(3.0)	0.00E+00	2.66E-06
RHRC02AA-PMS-LF	4	1.10E-03	(18.5)	2.08E-07	(5.5)	0.00E+00	2.66E-06
C0DG01P-PMS-LF	4	1.10E-03	(18.5)	2.08E-07	(5.5)	0.00E+00	2.66E-06
LCSC002A-P-UUM	4	3.00E-03	(16.5)	2.08E-07	(7.5)	0.00E+00	2.66E-06
RHRC02AA-P-UUM	4	3.00E-03	(16.5)	2.08E-07	(7.5)	0.00E+00	2.66E-06
RHRH01AX-HTX-LFB	4	6.20E-03	(15.0)	2.07E-07	(9.0)	0.00E+00	2.53E-06
FAS	36	2.20E-02	(12.0)	1.48E-07	(10.0)	0.00E+00	1.08E-06
DG2A-GEN-LF-FTR	18	1.90E-02	(13.0)	7.44E-08	(11.0)	0.00E+00	7.52E-07
DG2A-GEN-LF-FTS	18	2.50E-02	(11.0)	7.39E-08	(12.0)	0.00E+00	7.43E-07
LAMBDA-AUX	36	5.40E-02	(10.0)	5.84E-08	(13.0)	0.00E+00	5.37E-07
FA10	36	1.10E-01	(9.0)	2.70E-08	(14.0)	0.00E+00	2.12E-07
SUR-002-L	18	1.60E-01	(8.0)	1.69E-08	(15.0)	0.00E+00	8.17E-08
FS2	36	3.00E-01	(7.0)	7.78E-09	(16.0)	0.00E+00	7.46E-08
SUR-027-R	18	1.80E-02	(14.0)	6.58E-09	(17.0)	0.00E+00	3.31E-08
CONT-LEAK	36	7.50E-01	(6.0)	9.51E-10	(18.0)	-1.71E-09	0.00E+00
Q12TG	36	9.70E-01	(5.0)	1.03E-10	(19.0)	0.00E+00	7.41E-10
NOFLOW-RHR-A1	4	1.00E+00	(2.5)	0.00E+00	(21.5)		
NLOSP	36	1.00E+00	(2.5)	0.00E+00	(21.5)		
SCSF06AA-DENER	4	1.00E+00	(2.5)	0.00E+00	(21.5)		
FLOW-RHR-A3	4	1.00E+00	(2.5)	0.00E+00	(21.5)		

FIRE-S-AA SEQUENCE
UNCERTAINTY IMPORTANCE BY BASE EVENT

BASE EVENT	OCCUR	PROB	(RANK)	% REDUCTION IN THE UNCERTAINTY OF LOG RISK	(RANK)	Y.05/TE.05*	Y.95/TE.95*
SUR-002-L	18	1.60E-01	(8.0)	55.8	(1.0)	NA	0.57
LAMBDA-AUX	36	5.40E-02	(10.0)	6.9	(2.0)	NA	1.14
SUR-027-R	18	1.80E-02	(14.0)	6.5	(3.0)	NA	1.00
RHRH01AX-HTX-LFB	4	6.20E-03	(15.0)	6.2	(4.0)	NA	0.91
FA10	36	1.10E-01	(9.0)	3.9	(5.0)	NA	1.01
FAS	36	2.20E-02	(12.0)	3.3	(6.0)	NA	0.92
DG2A-GEN-LF-FTS	18	2.50E-02	(11.0)	2.7	(7.0)	NA	1.08
DG2A-GEN-LF-FTR	18	1.90E-02	(13.0)	2.0	(8.0)	NA	1.32
CSCF068A-VCC-LF	4	5.00E-04	(21.0)	1.6	(9.5)	NA	0.94
RHRF48AA-VOO-LF	4	5.00E-04	(21.0)	1.6	(9.5)	NA	0.94
RHR301AX-STR	4	1.10E-04	(23.0)	1.6	(11.0)	NA	1.01
LCSC002A-P-UUM	4	3.00E-03	(16.5)	1.4	(12.5)	NA	1.14
RHRC02AA-P-UUM	4	3.00E-03	(16.5)	1.4	(12.5)	NA	1.14
FS2	36	3.00E-01	(7.0)	1.3	(14.0)	NA	1.08
RHRB01AA-BOO-LF	4	5.00E-04	(21.0)	1.0	(15.0)	NA	1.07
CONT-LEAK	36	7.50E-01	(6.0)	0.2	(16.0)	NA	0.75
Q12TG	36	9.70E-01	(5.0)	0.0	(18.0)		
C0DG01P-PMS-LF	4	1.10E-03	(18.5)	0.0	(18.0)		
RHRC02AA-PMS-LF	4	1.10E-03	(18.5)	0.0	(18.0)		
NOFLOW-RHR-A1	4	1.00E+00	(2.5)				
NLOSP	36	1.00E+00	(2.5)				
SCSF06AA-DENER	4	1.00E+00	(2.5)				
FLOW-RHR-A3	4	1.00E+00	(2.5)				

FIRE-S-AA SEQUENCE

CUT SET NUMBERS, CUT SET ORDERS, CUT SET FREQUENCIES,
CUMULATIVE NORMALIZED CUT SET FREQUENCIES AND CUT SETS
FOR TOP EVENT FIRE-S-AA WITH TOP EVENT FREQUENCY 3.34E-09

(THE FIRST COLUMN OF NUMBERS IS THE LINE NUMBERS FOR THE FILE TEMACSETS.DNF)

2	12	10	7.07E-10	0.21208	CONT-LEAK	*	DG2A-GEN-LF-FTS	*	FA10	*	FAS	*
3					FS2	*	LAMBDA-AUX	*	NLOSP	*	Q12TG	*
4					RHRH01AX-HTX-LFB	*	SUR-002-L	+				
5	3	10	5.38E-10	0.37326	CONT-LEAK	*	DG2A-GEN-LF-FTR	*	FA10	*	FAS	*
6					FS2	*	LAMBDA-AUX	*	NLOSP	*	Q12TG	*
7					RHRH01AX-HTX-LFB	*	SUR-002-L	+				
8	17	10	3.42E-10	0.47588	CONT-LEAK	*	DG2A-GEN-LF-FTS	*	FA10	*	FAS	*
9					FS2	*	LAMBDA-AUX	*	LCSC002A-P-UUM	*	NLOSP	*
10					Q12TG	*	SUR-002-L	+				
11	14	11	3.42E-10	0.57850	CONT-LEAK	*	DG2A-GEN-LF-FTS	*	FA10	*	FAS	*
12					FS2	*	LAMBDA-AUX	*	NLOSP	*	Q12TG	*
13					RHRC02AA-P-UUM	*	SCSF06AA-DENER	*	SUR-002-L	+		
14	5	11	2.60E-10	0.65649	CONT-LEAK	*	DG2A-GEN-LF-FTR	*	FA10	*	FAS	*
15					FS2	*	LAMBDA-AUX	*	NLOSP	*	Q12TG	*
16					RHRC02AA-P-UUM	*	SCSF06AA-DENER	*	SUR-002-L	+		
17	8	10	2.60E-10	0.73448	CONT-LEAK	*	DG2A-GEN-LF-FTR	*	FA10	*	FAS	*
18					FS2	*	LAMBDA-AUX	*	LCSC002A-P-UUM	*	NLOSP	*
19					Q12TG	*	SUR-002-L	+				
20	18	10	1.25E-10	0.77211	CONT-LEAK	*	DG2A-GEN-LF-FTS	*	FA10	*	FAS	*
21					FS2	*	LAMBDA-AUX	*	NLOSP	*	Q12TG	*
22					RHRC02AA-PMS-LF	*	SUR-002-L	+				
23	16	10	1.25E-10	0.80973	C0DG01P-PMS-LF	*	CONT-LEAK	*	DG2A-GEN-LF-FTS	*	FA10	*
24					FAS	*	FS2	*	LAMBDA-AUX	*	NLOSP	*
25					Q12TG	*	SUR-002-L	+				
26	7	10	9.54E-11	0.83833	C0DG01P-PMS-LF	*	CONT-LEAK	*	DG2A-GEN-LF-FTR	*	FA10	*
27					FAS	*	FS2	*	LAMBDA-AUX	*	NLOSP	*
28					Q12TG	*	SUR-002-L	+				
29	9	10	9.54E-11	0.86693	CONT-LEAK	*	DG2A-GEN-LF-FTR	*	FA10	*	FAS	*
30					FS2	*	LAMBDA-AUX	*	NLOSP	*	Q12TG	*
31					RHRC02AA-PMS-LF	*	SUR-002-L	+				
32	10	10	5.70E-11	0.88403	CONT-LEAK	*	CSCF068A-VCC-LF	*	DG2A-GEN-LF-FTS	*	FA10	*
33					FAS	*	FS2	*	LAMBDA-AUX	*	NLOSP	*
34					Q12TG	*	SUR-002-L	+				
35	11	10	5.70E-11	0.90113	CONT-LEAK	*	DG2A-GEN-LF-FTS	*	FA10	*	FAS	*
36					FS2	*	LAMBDA-AUX	*	NLOSP	*	Q12TG	*
37					RHRB01AA-BOO-LF	*	SUR-002-L	+				

38	13	11	5.70E-11	0.91824	CONT-LEAK	*	DG2A-GEN-LF-FTS	*	FA10	*	FAS	*
39					FLOW-RHR-A3	*	FS2	*	LAMBDA-AUX	*	NLOSP	*
40					Q12TG	*	RHRF48AA-VOO-LF	*	SUR-002-L	+		
41	1	10	4.34E-11	0.93124	CONT-LEAK	*	CSCF068A-VCC-LF	*	DG2A-GEN-LF-FTR	*	FA10	*
42					FAS	*	FS2	*	LAMBDA-AUX	*	NLOSP	*
43					Q12TG	*	SUR-002-L	+				
44	4	11	4.34E-11	0.94423	CONT-LEAK	*	DG2A-GEN-LF-FTR	*	FA10	*	FAS	*
45					FLOW-RHR-A3	*	FS2	*	LAMBDA-AUX	*	NLOSP	*
46					Q12TG	*	RHRF48AA-VOO-LF	*	SUR-002-L	+		
47	2	10	4.34E-11	0.95723	CONT-LEAK	*	DG2A-GEN-LF-FTR	*	FA10	*	FAS	*
48					FS2	*	LAMBDA-AUX	*	NLOSP	*	Q12TG	*
49					RHRB01AA-BOO-LF	*	SUR-002-L	+				
50	30	10	2.65E-11	0.96519	/CONT-LEAK	*	DG2A-GEN-LF-FTS	*	FA10	*	FAS	*
51					FS2	*	LAMBDA-AUX	*	NLOSP	*	Q12TG	*
52					RHRH01AX-HTX-LFB	*	SUR-027-R	+				
53	21	10	2.02E-11	0.97123	/CONT-LEAK	*	DG2A-GEN-LF-FTR	*	FA10	*	FAS	*
54					FS2	*	LAMBDA-AUX	*	NLOSP	*	Q12TG	*
55					RHRH01AX-HTX-LFB	*	SUR-027-R	+				
56	35	10	1.28E-11	0.97508	/CONT-LEAK	*	DG2A-GEN-LF-FTS	*	FA10	*	FAS	*
57					FS2	*	LAMBDA-AUX	*	LCSC002A-P-UUM	*	NLOSP	*
58					Q12TG	*	SUR-027-R	+				
59	32	11	1.28E-11	0.97893	/CONT-LEAK	*	DG2A-GEN-LF-FTS	*	FA10	*	FAS	*
60					FS2	*	LAMBDA-AUX	*	NLOSP	*	Q12TG	*
61					RHRC02AA-P-UUM	*	SCSF06AA-DENER	*	SUR-027-R	+		
62	15	11	1.25E-11	0.98269	CONT-LEAK	*	DG2A-GEN-LF-FTS	*	FA10	*	FAS	*
63					FS2	*	LAMBDA-AUX	*	NLOSP	*	NOFLOW-RHR-A1	*
64					Q12TG	*	RHR301AX-STR	*	SUR-002-L	+		
65	26	10	9.75E-12	0.98561	/CONT-LEAK	*	DG2A-GEN-LF-FTR	*	FA10	*	FAS	*
66					FS2	*	LAMBDA-AUX	*	LCSC002A-P-UUM	*	NLOSP	*
67					Q12TG	*	SUR-027-R	+				
68	23	11	9.75E-12	0.98854	/CONT-LEAK	*	DG2A-GEN-LF-FTR	*	FA10	*	FAS	*
69					FS2	*	LAMBDA-AUX	*	NLOSP	*	Q12TG	*
70					RHRC02AA-P-UUM	*	SCSF06AA-DENER	*	SUR-027-R	+		
71	6	11	9.54E-12	0.99140	CONT-LEAK	*	DG2A-GEN-LF-FTR	*	FA10	*	FAS	*
72					FS2	*	LAMBDA-AUX	*	NLOSP	*	NOFLOW-RHR-A1	*
73					Q12TG	*	RHR301AX-STR	*	SUR-002-L	+		
74	34	10	4.71E-12	0.99281	C0DG01P-PMS-LF	*	/CONT-LEAK	*	DG2A-GEN-LF-FTS	*	FA10	*
75					FAS	*	FS2	*	LAMBDA-AUX	*	NLOSP	*
76					Q12TG	*	SUR-027-R	+				
77	36	10	4.71E-12	0.99422	/CONT-LEAK	*	DG2A-GEN-LF-FTS	*	FA10	*	FAS	*
78					FS2	*	LAMBDA-AUX	*	NLOSP	*	Q12TG	*
79					RHRC02AA-PMS-LF	*	SUR-027-R	+				
80	27	10	3.58E-12	0.99529	/CONT-LEAK	*	DG2A-GEN-LF-FTR	*	FA10	*	FAS	*
81					FS2	*	LAMBDA-AUX	*	NLOSP	*	Q12TG	*
82					RHRC02AA-PMS-LF	*	SUR-027-R	+				

83	25	10	3.58E-12	0.99637	C0DG01P-PMS-LF	*	/CONT-LEAK	*	DG2A-GEN-LF-FTR	*	FA10		*
84					FAS	*	FS2	*	LAMBDA-AUX	*	NLOSP		*
85					Q12TG	*	SUR-027-R	+					
86	28	10	2.14E-12	0.99701	/CONT-LEAK	*	CSCF068A-VCC-LF	*	DG2A-GEN-LF-FTS	*	FA10		*
87					FAS	*	FS2	*	LAMBDA-AUX	*	NLOSP		*
88					Q12TG	*	SUR-027-R	+					
89	31	11	2.14E-12	0.99765	/CONT-LEAK	*	DG2A-GEN-LF-FTS	*	FA10	*	FAS		*
90					FLOW-RHR-A3	*	FS2	*	LAMBDA-AUX	*	NLOSP		*
91					Q12TG	*	RHRF48AA-VOO-LF	*	SUR-027-R	+			
92	29	10	2.14E-12	0.99829	/CONT-LEAK	*	DG2A-GEN-LF-FTS	*	FA10	*	FAS		*
93					FS2	*	LAMBDA-AUX	*	NLOSP	*	Q12TG		*
94					RHRB01AA-BOO-LF	*	SUR-027-R	+					
95	19	10	1.63E-12	0.99878	/CONT-LEAK	*	CSCF068A-VCC-LF	*	DG2A-GEN-LF-FTR	*	FA10		*
96					FAS	*	FS2	*	LAMBDA-AUX	*	NLOSP		*
97					Q12TG	*	SUR-027-R	+					
98	22	11	1.63E-12	0.99926	/CONT-LEAK	*	DG2A-GEN-LF-FTR	*	FA10	*	FAS		*
99					FLOW-RHR-A3	*	FS2	*	LAMBDA-AUX	*	NLOSP		*
100					Q12TG	*	RHRF48AA-VOO-LF	*	SUR-027-R	+			
101	20	10	1.63E-12	0.99975	/CONT-LEAK	*	DG2A-GEN-LF-FTR	*	FA10	*	FAS		*
102					FS2	*	LAMBDA-AUX	*	NLOSP	*	Q12TG		*
103					RHRB01AA-BOO-LF	*	SUR-027-R	+					
104	33	11	4.71E-13	0.99989	/CONT-LEAK	*	DG2A-GEN-LF-FTS	*	FA10	*	FAS		*
105					FS2	*	LAMBDA-AUX	*	NLOSP	*	NOFLOW-RHR-A1		*
106					Q12TG	*	RHR301AX-STR	*	SUR-027-R	+			
107	24	11	3.58E-13	1.00000	/CONT-LEAK	*	DG2A-GEN-LF-FTR	*	FA10	*	FAS		*
108					FS2	*	LAMBDA-AUX	*	NLOSP	*	NOFLOW-RHR-A1		*
109					Q12TG	*	RHR301AX-STR	*	SUR-027-R	.			

TEMAC RUN TIME IN CPU SECONDS 49.32

FIRE-S-W SEQUENCE

TOP EVENT FIRE-S-W CONTAINS 70 EVENTS IN 114 CUT SETS

THE FREQUENCY OF TOP EVENT FIRE-S-W IS 1.93E-07

DESCRIPTIVE STATISTICS FOR THE FREQUENCY OF TOP EVENT FIRE-S-W

N	400
MEAN	3.52E-07
STD DEV	1.66E-06
LOWER 5%	0.00E+00
LOWER 25%	0.00E+00
MEDIAN	0.00E+00
UPPER 25%	6.90E-08
UPPER 5%	1.57E-06

90% UNCERTAINTY INTERVAL FOR TOP EVENT FREQUENCY (INNERMOST BRACKETS DENOTE INTERQUARTILE RANGE, ASTERISK DENOTES MEDIAN, N DENOTES NOMINAL VALUE AND M DENOTES MEAN)

NOMENCLATURE:

PD = PARTIAL DERIVATIVE

TEF = FREQUENCY OF THE TOP EVENT

EV(J) = PROBABILITY OF EVENT J FOR BASE EVENTS
= FREQUENCY OF EVENT J FOR INITIATING EVENTS

MEASURES:

1. FOR BASE EVENTS AND INITIATING EVENTS:

RISK REDUCTION = PD x EV(J)
= TEF - TEF(EVALUATED WITH EV(J) = 0)

2. FOR BASE EVENTS ONLY:

RISK INCREASE = PD - RISK REDUCTION
= PD x (1 - EV(J))
= TEF(EVALUATED WITH EV(J) = 1) - TEF

FIRE-S-W SEQUENCE
RISK REDUCTION BY BASE EVENT (WITH ASSOCIATED UNCERTAINTY INTERVALS)

BASE EVENT	OCCUR	PROB	(RANK)	RISK REDUCTION	(RANK)	LOWER 5%	UPPER 5%
FAS	114	2.20E-02	(12.0)	1.93E-07	(3.0)	0.00E+00	1.57E-06
LAMBDA-AUX	114	5.40E-02	(10.0)	1.93E-07	(3.0)	0.00E+00	1.57E-06
Q12TG	114	9.70E-01	(4.0)	1.93E-07	(3.0)	0.00E+00	1.57E-06
FA11	114	1.10E-01	(8.5)	1.93E-07	(3.0)	0.00E+00	1.57E-06
FS2	114	3.00E-01	(6.0)	1.93E-07	(3.0)	0.00E+00	1.57E-06
SUR-002-L	57	1.60E-01	(7.0)	1.86E-07	(6.0)	0.00E+00	1.49E-06
CONT-LEAK	114	7.50E-01	(5.0)	1.65E-07	(7.0)	0.00E+00	1.49E-06
RHRH01AX-HTX-LFB	2	6.20E-03	(14.0)	2.94E-08	(8.0)	0.00E+00	2.41E-07
SCSF06AA-DENER	8	1.00E+00	(2.0)	1.85E-08	(9.0)		
RHRC02AA-P-NDUUM	2	3.00E-03	(16.5)	1.42E-08	(11.5)	0.00E+00	8.44E-08
RHRC02AA-P-UUM	2	3.00E-03	(16.5)	1.42E-08	(11.5)	0.00E+00	7.71E-08
C0DG01P-P-UUM	2	3.00E-03	(16.5)	1.42E-08	(11.5)	0.00E+00	8.44E-08
LCSC002A-P-UUM	2	3.00E-03	(16.5)	1.42E-08	(11.5)	0.00E+00	7.71E-08
C0DG01P-PMS-CC	2	2.50E-03	(21.5)	1.18E-08	(15.0)	0.00E+00	7.18E-08
NWVY01CA-FMS-CC	2	2.50E-03	(21.5)	1.18E-08	(15.0)	0.00E+00	7.18E-08
RHRB01AA-BOO-CC	2	2.50E-03	(21.5)	1.18E-08	(15.0)	0.00E+00	7.18E-08
SUR-027-R	57	1.80E-02	(13.0)	6.99E-09	(17.0)	0.00E+00	1.16E-07
CSCD300A-PLG-LF	2	1.20E-03	(25.0)	5.68E-09	(18.0)	0.00E+00	3.14E-08
C0DG01P-PMS-LF	2	1.10E-03	(26.5)	5.21E-09	(19.5)	0.00E+00	3.68E-08
RHRC02AA-PMS-LF	2	1.10E-03	(26.5)	5.21E-09	(19.5)	0.00E+00	3.68E-08
NWVY01AX-ACX-LFI	2	8.40E-04	(28.0)	3.98E-09	(21.0)	0.00E+00	2.55E-08
FLOW-RHR-A3	6	1.00E+00	(2.0)	3.90E-09	(22.0)		
EE-CSCD300A-PLG	2	7.20E-04	(29.0)	3.41E-09	(23.0)	0.00E+00	1.97E-08
C0DG01F-PLG-LF	2	5.80E-04	(30.0)	2.75E-09	(24.0)	0.00E+00	1.54E-08
NWVY01CA-FMS-LF	2	5.40E-04	(31.0)	2.56E-09	(25.0)	0.00E+00	2.13E-08
RHRB01AA-BOO-LF	2	5.00E-04	(33.5)	2.37E-09	(27.5)	0.00E+00	1.94E-08
CSCF068A-VCC-LF	2	5.00E-04	(33.5)	2.37E-09	(27.5)	0.00E+00	1.36E-08
NWVY01CA-F-UUM	2	5.00E-04	(33.5)	2.37E-09	(27.5)	0.00E+00	2.25E-08
RHRF48AA-VOO-LF	2	5.00E-04	(33.5)	2.37E-09	(27.5)	0.00E+00	1.36E-08
RHRH01AX-H-UUM	2	3.00E-04	(44.0)	1.42E-09	(38.0)	0.00E+00	7.06E-09
RHRF65AA-N-UUM	2	3.00E-04	(44.0)	1.42E-09	(38.0)	0.00E+00	9.07E-09
RHRF87AA-V-UUM	2	3.00E-04	(44.0)	1.42E-09	(38.0)	0.00E+00	9.07E-09
RHRF88AX-R-UUM	2	3.00E-04	(44.0)	1.42E-09	(38.0)	0.00E+00	9.07E-09
RHRF51AA-N-UUM	2	3.00E-04	(44.0)	1.42E-09	(38.0)	0.00E+00	9.07E-09
RHRF48AA-V-UUM	2	3.00E-04	(44.0)	1.42E-09	(38.0)	0.00E+00	9.07E-09
RHRF47AA-V-UUM	2	3.00E-04	(44.0)	1.42E-09	(38.0)	0.00E+00	9.07E-09
RHRF64AA-V-UUM	2	3.00E-04	(44.0)	1.42E-09	(38.0)	0.00E+00	9.07E-09
RHRF55AX-R-UUM	2	3.00E-04	(44.0)	1.42E-09	(38.0)	0.00E+00	9.07E-09
C0DG01F-S-UUM	2	3.00E-04	(44.0)	1.42E-09	(38.0)	0.00E+00	7.06E-09
PC02AAAX-AOO-LFO	2	3.00E-04	(44.0)	1.42E-09	(38.0)	0.00E+00	8.48E-09

CSCF008A-V-UUM	2	3.00E-04	(44.0)	1.42E-09	(38.0)	0.00E+00	9.07E-09
CSCD300A-S-UUM	2	3.00E-04	(44.0)	1.42E-09	(38.0)	0.00E+00	7.06E-09
NWVY01AX-A-UUM	2	3.00E-04	(44.0)	1.42E-09	(38.0)	0.00E+00	7.06E-09
SCSF06AA-V-UUM	2	3.00E-04	(44.0)	1.42E-09	(38.0)	0.00E+00	9.07E-09
RHRF74AA-V-UUM	2	3.00E-04	(44.0)	1.42E-09	(38.0)	0.00E+00	9.07E-09
RHRF60AA-S-UUM	2	3.00E-04	(44.0)	1.42E-09	(38.0)	0.00E+00	9.07E-09
LPCI-PMS-CM	2	2.50E-03	(21.5)	1.30E-09	(47.5)	0.00E+00	5.84E-09
LPCI-BETA	2	1.10E-01	(8.5)	1.30E-09	(47.5)	0.00E+00	5.84E-09
NOFLOW-RHR-A1	4	1.00E+00	(2.0)	1.04E-09	(49.0)		
LPCI-MOV-BETA	4	3.00E-02	(11.0)	7.10E-10	(50.0)	0.00E+00	4.30E-09
RHRF47AA-VOC-LF	2	1.10E-04	(55.0)	5.21E-10	(53.0)	0.00E+00	4.62E-09
RHRF04AA-VOC-LF	2	1.10E-04	(55.0)	5.21E-10	(53.0)	0.00E+00	4.62E-09
RHRF03AA-VOC-LF	2	1.10E-04	(55.0)	5.21E-10	(53.0)	0.00E+00	4.62E-09
RHR301AX-STR	2	1.10E-04	(55.0)	5.21E-10	(53.0)	0.00E+00	2.95E-09
RHRF98AX-XOC-LF	2	1.10E-04	(55.0)	5.21E-10	(53.0)	0.00E+00	4.62E-09
RHRF31AX-CCC-LF	2	1.00E-04	(58.5)	4.73E-10	(56.5)	0.00E+00	4.02E-09
C0DG002-CCC-LF	2	1.00E-04	(58.5)	4.73E-10	(56.5)	0.00E+00	4.02E-09
CCBF068A-BCO-LF	2	8.40E-05	(61.0)	3.98E-10	(59.0)	0.00E+00	2.63E-09
CCB0DG1P-BCO-LF	2	8.40E-05	(61.0)	3.98E-10	(59.0)	0.00E+00	2.63E-09
1EB16211-BCO	2	8.40E-05	(61.0)	3.98E-10	(59.0)	0.00E+00	2.63E-09
LPCI-MOV-CM2	2	2.50E-03	(21.5)	3.55E-10	(61.5)	0.00E+00	2.15E-09
LPCI-MOV-CM1	2	2.50E-03	(21.5)	3.55E-10	(61.5)	0.00E+00	2.15E-09
1EB35Y2X-BCO-LF	2	7.20E-05	(66.0)	3.41E-10	(66.0)	0.00E+00	2.48E-09
1EB235YA-BCO-LF	2	7.20E-05	(66.0)	3.41E-10	(66.0)	0.00E+00	2.48E-09
1EB211YX-BCO-LF	2	7.20E-05	(66.0)	3.41E-10	(66.0)	0.00E+00	2.48E-09
1EB235XA-BCO-LF	2	7.20E-05	(66.0)	3.41E-10	(66.0)	0.00E+00	2.48E-09
1EB1Y22X-BCO	2	7.20E-05	(66.0)	3.41E-10	(66.0)	0.00E+00	2.48E-09
NWVB001X-BCO-LF	2	7.20E-05	(66.0)	3.41E-10	(66.0)	0.00E+00	2.48E-09
1EB235A-BCO-LF	2	7.20E-05	(66.0)	3.41E-10	(66.0)	0.00E+00	2.48E-09
RHRB03AX-BCO-LF	2	2.40E-05	(70.0)	1.14E-10	(70.0)	0.00E+00	7.80E-10

FIRE-S-W SEQUENCE
RISK INCREASE BY BASE EVENT (WITH ASSOCIATED UNCERTAINTY INTERVALS)

BASE EVENT	OCCUR	PROB	(RANK)	RISK INCREASE	(RANK)	LOWER 5%	UPPER 5%
FAS	114	2.20E-02	(12.0)	8.59E-06	(1.0)	0.00E+00	6.13E-05
RHRB03AX-BCO-LF	2	2.40E-05	(70.0)	4.73E-06	(2.0)	0.00E+00	3.96E-05
NWVB001X-BCO-LF	2	7.20E-05	(66.0)	4.73E-06	(6.0)	0.00E+00	3.96E-05
1EB235XA-BCO-LF	2	7.20E-05	(66.0)	4.73E-06	(6.0)	0.00E+00	3.96E-05
1EB211YX-BCO-LF	2	7.20E-05	(66.0)	4.73E-06	(6.0)	0.00E+00	3.96E-05
1EB235A-BCO-LF	2	7.20E-05	(66.0)	4.73E-06	(6.0)	0.00E+00	3.96E-05
1EB1Y22X-BCO	2	7.20E-05	(66.0)	4.73E-06	(6.0)	0.00E+00	3.96E-05
1EB35Y2X-BCO-LF	2	7.20E-05	(66.0)	4.73E-06	(6.0)	0.00E+00	3.96E-05
1EB235YA-BCO-LF	2	7.20E-05	(66.0)	4.73E-06	(6.0)	0.00E+00	3.96E-05
CCB0DG1P-BCO-LF	2	8.40E-05	(61.0)	4.73E-06	(11.0)	0.00E+00	3.96E-05
CCBF068A-BCO-LF	2	8.40E-05	(61.0)	4.73E-06	(11.0)	0.00E+00	3.96E-05
1EB16211-BCO	2	8.40E-05	(61.0)	4.73E-06	(11.0)	0.00E+00	3.96E-05
RHRF31AX-CCC-LF	2	1.00E-04	(58.5)	4.73E-06	(16.0)	0.00E+00	3.96E-05
C0DG002-CCC-LF	2	1.00E-04	(58.5)	4.73E-06	(16.0)	0.00E+00	3.96E-05
RHRF04AA-VOC-LF	2	1.10E-04	(55.0)	4.73E-06	(16.0)	0.00E+00	3.96E-05
RHRF03AA-VOC-LF	2	1.10E-04	(55.0)	4.73E-06	(16.0)	0.00E+00	3.96E-05
RHRF98AX-XOC-LF	2	1.10E-04	(55.0)	4.73E-06	(16.0)	0.00E+00	3.96E-05
RHR301AX-STR	2	1.10E-04	(55.0)	4.73E-06	(16.0)	0.00E+00	3.95E-05
RHRF47AA-VOC-LF	2	1.10E-04	(55.0)	4.73E-06	(16.0)	0.00E+00	3.96E-05
RHRF65AA-N-UUM	2	3.00E-04	(44.0)	4.73E-06	(28.0)	0.00E+00	3.96E-05
RHRF55AX-R-UUM	2	3.00E-04	(44.0)	4.73E-06	(28.0)	0.00E+00	3.96E-05
RHRF51AA-N-UUM	2	3.00E-04	(44.0)	4.73E-06	(28.0)	0.00E+00	3.96E-05
RHRF47AA-V-UUM	2	3.00E-04	(44.0)	4.73E-06	(28.0)	0.00E+00	3.96E-05
RHRF64AA-V-UUM	2	3.00E-04	(44.0)	4.73E-06	(28.0)	0.00E+00	3.96E-05
RHRF88AX-R-UUM	2	3.00E-04	(44.0)	4.73E-06	(28.0)	0.00E+00	3.96E-05
RHRF48AA-V-UUM	2	3.00E-04	(44.0)	4.73E-06	(28.0)	0.00E+00	3.96E-05
C0DG01F-S-UUM	2	3.00E-04	(44.0)	4.73E-06	(28.0)	0.00E+00	3.95E-05
RHRF60AA-S-UUM	2	3.00E-04	(44.0)	4.73E-06	(28.0)	0.00E+00	3.96E-05
RHRF74AA-V-UUM	2	3.00E-04	(44.0)	4.73E-06	(28.0)	0.00E+00	3.96E-05
RHRF87AA-V-UUM	2	3.00E-04	(44.0)	4.73E-06	(28.0)	0.00E+00	3.96E-05
PC02AAAX-AOO-LFO	2	3.00E-04	(44.0)	4.73E-06	(28.0)	0.00E+00	3.95E-05
CSCF008A-V-UUM	2	3.00E-04	(44.0)	4.73E-06	(28.0)	0.00E+00	3.96E-05
CSCD300A-S-UUM	2	3.00E-04	(44.0)	4.73E-06	(28.0)	0.00E+00	3.95E-05
NWVY01AX-A-UUM	2	3.00E-04	(44.0)	4.73E-06	(28.0)	0.00E+00	3.95E-05
SCSF06AA-V-UUM	2	3.00E-04	(44.0)	4.73E-06	(28.0)	0.00E+00	3.96E-05
RHRH01AX-H-UUM	2	3.00E-04	(44.0)	4.73E-06	(28.0)	0.00E+00	3.95E-05
RHRF48AA-VOO-LF	2	5.00E-04	(33.5)	4.73E-06	(38.5)	0.00E+00	3.94E-05
RHRB01AA-BOO-LF	2	5.00E-04	(33.5)	4.73E-06	(38.5)	0.00E+00	3.96E-05
CSCF068A-VCC-LF	2	5.00E-04	(33.5)	4.73E-06	(38.5)	0.00E+00	3.94E-05
NWVY01CA-F-UUM	2	5.00E-04	(33.5)	4.73E-06	(38.5)	0.00E+00	3.95E-05

NWVY01CA-FMS-LF	2	5.40E-04 (31.0)	4.73E-06 (41.0)	0.00E+00	3.95E-05
C0DG01F-PLG-LF	2	5.80E-04 (30.0)	4.73E-06 (42.0)	0.00E+00	3.96E-05
EE-CSCD300A-PLG	2	7.20E-04 (29.0)	4.73E-06 (43.0)	0.00E+00	3.95E-05
NWVY01AX-ACX-LFI	2	8.40E-04 (28.0)	4.73E-06 (44.0)	0.00E+00	3.93E-05
C0DG01P-PMS-LF	2	1.10E-03 (26.5)	4.73E-06 (45.5)	0.00E+00	3.95E-05
RHRC02AA-PMS-LF	2	1.10E-03 (26.5)	4.73E-06 (45.5)	0.00E+00	3.95E-05
CSCD300A-PLG-LF	2	1.20E-03 (25.0)	4.73E-06 (47.0)	0.00E+00	3.96E-05
C0DG01P-PMS-CC	2	2.50E-03 (21.5)	4.72E-06 (49.0)	0.00E+00	3.95E-05
RHRB01AA-BOO-CC	2	2.50E-03 (21.5)	4.72E-06 (49.0)	0.00E+00	3.95E-05
NWVY01CA-FMS-CC	2	2.50E-03 (21.5)	4.72E-06 (49.0)	0.00E+00	3.95E-05
LCSC002A-P-UUM	2	3.00E-03 (16.5)	4.72E-06 (52.5)	0.00E+00	3.93E-05
RHRC02AA-P-UUM	2	3.00E-03 (16.5)	4.72E-06 (52.5)	0.00E+00	3.93E-05
RHRC02AA-P-NDUUM	2	3.00E-03 (16.5)	4.72E-06 (52.5)	0.00E+00	3.95E-05
C0DG01P-P-UUM	2	3.00E-03 (16.5)	4.72E-06 (52.5)	0.00E+00	3.95E-05
RHRH01AX-HTX-LFB	2	6.20E-03 (14.0)	4.71E-06 (55.0)	0.00E+00	3.93E-05
LAMBDA-AUX	114	5.40E-02 (10.0)	3.39E-06 (56.0)	0.00E+00	3.00E-05
FA11	114	1.10E-01 (8.5)	1.56E-06 (57.0)	0.00E+00	1.23E-05
SUR-002-L	57	1.60E-01 (7.0)	9.78E-07 (58.0)	0.00E+00	4.18E-06
LPCI-PMS-CM	2	2.50E-03 (21.5)	5.19E-07 (59.0)	0.00E+00	4.15E-06
FS2	114	3.00E-01 (6.0)	4.51E-07 (60.0)	0.00E+00	4.09E-06
SUR-027-R	57	1.80E-02 (13.0)	3.81E-07 (61.0)	0.00E+00	2.14E-06
LPCI-MOV-CM2	2	2.50E-03 (21.5)	1.42E-07 (62.5)	0.00E+00	1.21E-06
LPCI-MOV-CM1	2	2.50E-03 (21.5)	1.42E-07 (62.5)	0.00E+00	1.21E-06
CONT-LEAK	114	7.50E-01 (5.0)	5.51E-08 (64.0)	-1.16E-07	0.00E+00
LPCI-MOV-BETA	4	3.00E-02 (11.0)	2.30E-08 (65.0)	0.00E+00	1.37E-07
LPCI-BETA	2	1.10E-01 (8.5)	1.05E-08 (66.0)	0.00E+00	6.34E-08
Q12TG	114	9.70E-01 (4.0)	5.98E-09 (67.0)	0.00E+00	5.31E-08
FLOW-RHR-A3	6	1.00E+00 (2.0)	0.00E+00 (69.0)		
SCSF06AA-DENER	8	1.00E+00 (2.0)	0.00E+00 (69.0)		
NOFLOW-RHR-A1	4	1.00E+00 (2.0)	0.00E+00 (69.0)		

FIRE-S-W SEQUENCE
UNCERTAINTY IMPORTANCE BY BASE EVENT

BASE EVENT	OCCUR	PROB	(RANK)	% REDUCTION IN THE UNCERTAINTY OF LOG RISK	(RANK)	Y.05/TE.05*	Y.95/TE.95*
SUR-002-L	57	1.60E-01	(7.0)	56.8	(1.0)	NA	0.51
SUR-027-R	57	1.80E-02	(13.0)	17.7	(2.0)	NA	0.95
CONT-LEAK	114	7.50E-01	(5.0)	9.9	(3.0)	NA	0.71
LAMBDA-AUX	114	5.40E-02	(10.0)	3.2	(4.0)	NA	1.08
RHRH01AX-HTX-LFB	2	6.20E-03	(14.0)	2.8	(5.0)	NA	1.07
NWVY01AX-ACX-LFI	2	8.40E-04	(28.0)	2.8	(6.0)	NA	1.03
RHRC02AA-P-NDUUM	2	3.00E-03	(16.5)	2.0	(7.5)	NA	1.16
C0DG01P-P-UUM	2	3.00E-03	(16.5)	2.0	(7.5)	NA	1.16
EE-CSCD300A-PLG	2	7.20E-04	(29.0)	1.9	(9.0)	NA	1.02
CSCD300A-PLG-LF	2	1.20E-03	(25.0)	1.7	(10.0)	NA	1.01
C0DG01F-PLG-LF	2	5.80E-04	(30.0)	1.7	(11.0)	NA	1.01
FA11	114	1.10E-01	(8.5)	1.6	(12.0)	NA	1.00
LPCI-MOV-BETA	4	3.00E-02	(11.0)	1.6	(13.0)	NA	1.00
CSCF068A-VCC-LF	2	5.00E-04	(33.5)	1.5	(14.5)	NA	1.01
RHRF48AA-VOO-LF	2	5.00E-04	(33.5)	1.5	(14.5)	NA	1.01
RHRB01AA-BOO-LF	2	5.00E-04	(33.5)	1.5	(16.0)	NA	1.01
RHRF64AA-V-UUM	2	3.00E-04	(44.0)	1.4	(22.5)	NA	1.03
RHRF60AA-S-UUM	2	3.00E-04	(44.0)	1.4	(22.5)	NA	1.03
RHRF88AX-R-UUM	2	3.00E-04	(44.0)	1.4	(22.5)	NA	1.03
RHRF47AA-V-UUM	2	3.00E-04	(44.0)	1.4	(22.5)	NA	1.03
CSCF008A-V-UUM	2	3.00E-04	(44.0)	1.4	(22.5)	NA	1.03
RHRF51AA-N-UUM	2	3.00E-04	(44.0)	1.4	(22.5)	NA	1.03
RHRF55AX-R-UUM	2	3.00E-04	(44.0)	1.4	(22.5)	NA	1.03
RHRF87AA-V-UUM	2	3.00E-04	(44.0)	1.4	(22.5)	NA	1.03
RHRF74AA-V-UUM	2	3.00E-04	(44.0)	1.4	(22.5)	NA	1.03
RHRF48AA-V-UUM	2	3.00E-04	(44.0)	1.4	(22.5)	NA	1.03
SCSF06AA-V-UUM	2	3.00E-04	(44.0)	1.4	(22.5)	NA	1.03
RHRF65AA-N-UUM	2	3.00E-04	(44.0)	1.4	(22.5)	NA	1.03
RHRF31AX-CCC-LF	2	1.00E-04	(58.5)	1.3	(29.5)	NA	0.99
C0DG002-CCC-LF	2	1.00E-04	(58.5)	1.3	(29.5)	NA	0.99
FAS	114	2.20E-02	(12.0)	1.2	(31.0)	NA	0.88
RHR301AX-STR	2	1.10E-04	(55.0)	1.2	(32.0)	NA	0.98
NWVY01CA-F-UUM	2	5.00E-04	(33.5)	1.0	(33.0)	NA	1.01
RHRB03AX-BCO-LF	2	2.40E-05	(70.0)	1.0	(34.0)	NA	1.00
FS2	114	3.00E-01	(6.0)	0.9	(35.0)	NA	1.10
Q12TG	114	9.70E-01	(4.0)	0.8	(36.0)	NA	1.01
CCBF068A-BCO-LF	2	8.40E-05	(61.0)	0.6	(38.0)	NA	1.01
CCB0DG1P-BCO-LF	2	8.40E-05	(61.0)	0.6	(38.0)	NA	1.01
1EB16211-BCO	2	8.40E-05	(61.0)	0.6	(38.0)	NA	1.01
LPCI-MOV-CM2	2	2.50E-03	(21.5)	0.0	(53.5)		

LPCI-MOV-CM1	2	2.50E-03 (21.5)	0.0	(53.5)
LPCI-BETA	2	1.10E-01 (8.5)	0.0	(53.5)
1EB35Y2X-BCO-LF	2	7.20E-05 (66.0)	0.0	(53.5)
LCSC002A-P-UUM	2	3.00E-03 (16.5)	0.0	(53.5)
RHRF47AA-VOC-LF	2	1.10E-04 (55.0)	0.0	(53.5)
C0DG01P-PMS-LF	2	1.10E-03 (26.5)	0.0	(53.5)
RHRF04AA-VOC-LF	2	1.10E-04 (55.0)	0.0	(53.5)
RHRF03AA-VOC-LF	2	1.10E-04 (55.0)	0.0	(53.5)
RHRC02AA-PMS-LF	2	1.10E-03 (26.5)	0.0	(53.5)
C0DG01P-PMS-CC	2	2.50E-03 (21.5)	0.0	(53.5)
1EB235YA-BCO-LF	2	7.20E-05 (66.0)	0.0	(53.5)
1EB211YX-BCO-LF	2	7.20E-05 (66.0)	0.0	(53.5)
RHRC02AA-P-UUM	2	3.00E-03 (16.5)	0.0	(53.5)
RHRB01AA-BOO-CC	2	2.50E-03 (21.5)	0.0	(53.5)
PC02AAAX-AOO-LFO	2	3.00E-04 (44.0)	0.0	(53.5)
C0DG01F-S-UUM	2	3.00E-04 (44.0)	0.0	(53.5)
1EB235XA-BCO-LF	2	7.20E-05 (66.0)	0.0	(53.5)
NWVY01CA-FMS-LF	2	5.40E-04 (31.0)	0.0	(53.5)
NWVY01CA-FMS-CC	2	2.50E-03 (21.5)	0.0	(53.5)
CSCD300A-S-UUM	2	3.00E-04 (44.0)	0.0	(53.5)
NWVY01AX-A-UUM	2	3.00E-04 (44.0)	0.0	(53.5)
NWVB001X-BCO-LF	2	7.20E-05 (66.0)	0.0	(53.5)
RHRH01AX-H-UUM	2	3.00E-04 (44.0)	0.0	(53.5)
RHRF98AX-XOC-LF	2	1.10E-04 (55.0)	0.0	(53.5)
LPCI-PMS-CM	2	2.50E-03 (21.5)	0.0	(53.5)
1EB235A-BCO-LF	2	7.20E-05 (66.0)	0.0	(53.5)
1EB1Y22X-BCO	2	7.20E-05 (66.0)	0.0	(53.5)
FLOW-RHR-A3	6	1.00E+00 (2.0)		
SCSF06AA-DENER	8	1.00E+00 (2.0)		
NOFLOW-RHR-A1	4	1.00E+00 (2.0)		

FIRE-S-W SEQUENCE

CUT SET NUMBERS, CUT SET ORDERS, CUT SET FREQUENCIES,
CUMULATIVE NORMALIZED CUT SET FREQUENCIES AND CUT SETS
FOR TOP EVENT FIRE-S-W WITH TOP EVENT FREQUENCY 1.93E-07

(THE FIRST COLUMN OF NUMBERS IS THE LINE NUMBERS FOR THE FILE TEMACSETS.DNF)

2	18	8	2.83E-08	0.14634	CONT-LEAK	*	FA11	*	FAS	*	FS2	*
3					LAMBDA-AUX	*	Q12TG	*	RHRH01AX-HTX-LFB	*	SUR-002-L	+
4	32	8	1.37E-08	0.21715	CONT-LEAK	*	FA11	*	FAS	*	FS2	*
5					LAMBDA-AUX	*	Q12TG	*	RHRC02AA-P-NDUUM	*	SUR-002-L	+
6	24	8	1.37E-08	0.28796	C0DG01P-P-UUM	*	CONT-LEAK	*	FA11	*	FAS	*
7					FS2	*	LAMBDA-AUX	*	Q12TG	*	SUR-002-L	+
8	50	9	1.37E-08	0.35878	CONT-LEAK	*	FA11	*	FAS	*	FS2	*
9					LAMBDA-AUX	*	Q12TG	*	RHRC02AA-P-UUM	*	SCSF06AA-DENER	*
10					SUR-002-L	+						
11	29	8	1.37E-08	0.42959	CONT-LEAK	*	FA11	*	FAS	*	FS2	*
12					LAMBDA-AUX	*	LCSC002A-P-UUM	*	Q12TG	*	SUR-002-L	+
13	49	8	1.14E-08	0.48860	CONT-LEAK	*	FA11	*	FAS	*	FS2	*
14					LAMBDA-AUX	*	Q12TG	*	RHRB01AA-BOO-CC	*	SUR-002-L	+
15	42	8	1.14E-08	0.54760	CONT-LEAK	*	FA11	*	FAS	*	FS2	*
16					LAMBDA-AUX	*	NWVY01CA-FMS-CC	*	Q12TG	*	SUR-002-L	+
17	45	8	1.14E-08	0.60661	C0DG01P-PMS-CC	*	CONT-LEAK	*	FA11	*	FAS	*
18					FS2	*	LAMBDA-AUX	*	Q12TG	*	SUR-002-L	+
19	55	8	5.48E-09	0.63494	CONT-LEAK	*	CSCD300A-PLG-LF	*	FA11	*	FAS	*
20					FS2	*	LAMBDA-AUX	*	Q12TG	*	SUR-002-L	+
21	6	8	5.02E-09	0.66090	CONT-LEAK	*	FA11	*	FAS	*	FS2	*
22					LAMBDA-AUX	*	Q12TG	*	RHRC02AA-PMS-LF	*	SUR-002-L	+
23	22	8	5.02E-09	0.68687	C0DG01P-PMS-LF	*	CONT-LEAK	*	FA11	*	FAS	*
24					FS2	*	LAMBDA-AUX	*	Q12TG	*	SUR-002-L	+
25	3	8	3.83E-09	0.70669	CONT-LEAK	*	FA11	*	FAS	*	FS2	*
26					LAMBDA-AUX	*	NWVY01AX-ACX-LFI	*	Q12TG	*	SUR-002-L	+
27	12	8	3.29E-09	0.72369	CONT-LEAK	*	EE-CSCD300A-PLG	*	FA11	*	FAS	*
28					FS2	*	LAMBDA-AUX	*	Q12TG	*	SUR-002-L	+
29	34	8	2.65E-09	0.73738	C0DG01F-PLG-LF	*	CONT-LEAK	*	FA11	*	FAS	*
30					FS2	*	LAMBDA-AUX	*	Q12TG	*	SUR-002-L	+
31	40	8	2.46E-09	0.75012	CONT-LEAK	*	FA11	*	FAS	*	FS2	*
32					LAMBDA-AUX	*	NWVY01CA-FMS-LF	*	Q12TG	*	SUR-002-L	+
33	16	8	2.28E-09	0.76193	CONT-LEAK	*	FA11	*	FAS	*	FS2	*
34					LAMBDA-AUX	*	Q12TG	*	RHRB01AA-BOO-LF	*	SUR-002-L	+
35	54	8	2.28E-09	0.77373	CONT-LEAK	*	FA11	*	FAS	*	FS2	*
36					LAMBDA-AUX	*	NWVY01CA-F-UUM	*	Q12TG	*	SUR-002-L	+
37	43	9	2.28E-09	0.78553	CONT-LEAK	*	FA11	*	FAS	*	FLOW-RHR-A3	*
38					FS2	*	LAMBDA-AUX	*	Q12TG	*	RHRF48AA-VOO-LF	*
39					SUR-002-L	+						

40	30	8	2.28E-09	0.79733	CONT-LEAK	*	CSCF068A-VCC-LF	*	FA11	*	FAS	*
41					FS2	*	LAMBDA-AUX	*	Q12TG	*	SUR-002-L	+
42	21	8	1.37E-09	0.80441	CONT-LEAK	*	FA11	*	FAS	*	FS2	*
43					LAMBDA-AUX	*	NWVY01AX-A-UUM	*	Q12TG	*	SUR-002-L	+
44	4	8	1.37E-09	0.81149	CONT-LEAK	*	FA11	*	FAS	*	FS2	*
45					LAMBDA-AUX	*	PC02AAAX-AOO-LFO	*	Q12TG	*	SUR-002-L	+
46	15	8	1.37E-09	0.81857	CONT-LEAK	*	FA11	*	FAS	*	FS2	*
47					LAMBDA-AUX	*	Q12TG	*	RHRH01AX-H-UUM	*	SUR-002-L	+
48	33	8	1.37E-09	0.82566	CONT-LEAK	*	CSCD300A-S-UUM	*	FA11	*	FAS	*
49					FS2	*	LAMBDA-AUX	*	Q12TG	*	SUR-002-L	+
50	27	8	1.37E-09	0.83274	CONT-LEAK	*	FA11	*	FAS	*	FS2	*
51					LAMBDA-AUX	*	Q12TG	*	RHRF74AA-V-UUM	*	SUR-002-L	+
52	13	8	1.37E-09	0.83982	CONT-LEAK	*	FA11	*	FAS	*	FS2	*
53					LAMBDA-AUX	*	Q12TG	*	SCSF06AA-V-UUM	*	SUR-002-L	+
54	31	9	1.37E-09	0.84690	CONT-LEAK	*	FA11	*	FAS	*	FS2	*
55					LAMBDA-AUX	*	Q12TG	*	RHRF64AA-V-UUM	*	SCSF06AA-DENER	*
56					SUR-002-L	+						
57	41	8	1.37E-09	0.85398	CONT-LEAK	*	CSCF008A-V-UUM	*	FA11	*	FAS	*
58					FS2	*	LAMBDA-AUX	*	Q12TG	*	SUR-002-L	+
59	5	9	1.37E-09	0.86106	CONT-LEAK	*	FA11	*	FAS	*	FS2	*
60					LAMBDA-AUX	*	Q12TG	*	RHRF88AX-R-UUM	*	SCSF06AA-DENER	*
61					SUR-002-L	+						
62	19	9	1.37E-09	0.86814	CONT-LEAK	*	FA11	*	FAS	*	FS2	*
63					LAMBDA-AUX	*	Q12TG	*	RHRF47AA-V-UUM	*	SCSF06AA-DENER	*
64					SUR-002-L	+						
65	9	8	1.37E-09	0.87522	C0DG01F-S-UUM	*	CONT-LEAK	*	FA11	*	FAS	*
66					FS2	*	LAMBDA-AUX	*	Q12TG	*	SUR-002-L	+
67	2	8	1.37E-09	0.88230	CONT-LEAK	*	FA11	*	FAS	*	FS2	*
68					LAMBDA-AUX	*	Q12TG	*	RHRF87AA-V-UUM	*	SUR-002-L	+
69	36	9	1.37E-09	0.88939	CONT-LEAK	*	FA11	*	FAS	*	FLOW-RHR-A3	*
70					FS2	*	LAMBDA-AUX	*	Q12TG	*	RHRF48AA-V-UUM	*
71					SUR-002-L	+						
72	38	8	1.37E-09	0.89647	CONT-LEAK	*	FA11	*	FAS	*	FS2	*
73					LAMBDA-AUX	*	Q12TG	*	RHRF51AA-N-UUM	*	SUR-002-L	+
74	17	8	1.37E-09	0.90355	CONT-LEAK	*	FA11	*	FAS	*	FS2	*
75					LAMBDA-AUX	*	Q12TG	*	RHRF55AX-R-UUM	*	SUR-002-L	+
76	28	8	1.37E-09	0.91063	CONT-LEAK	*	FA11	*	FAS	*	FS2	*
77					LAMBDA-AUX	*	Q12TG	*	RHRF65AA-N-UUM	*	SUR-002-L	+
78	8	8	1.37E-09	0.91771	CONT-LEAK	*	FA11	*	FAS	*	FS2	*
79					LAMBDA-AUX	*	Q12TG	*	RHRF60AA-S-UUM	*	SUR-002-L	+
80	46	9	1.25E-09	0.92420	CONT-LEAK	*	FA11	*	FAS	*	FS2	*
81					LAMBDA-AUX	*	LPCI-BETA	*	LPCI-PMS-CM	*	Q12TG	*
82					SUR-002-L	+						
83	75	8	1.06E-09	0.92969	/CONT-LEAK	*	FA11	*	FAS	*	FS2	*
84					LAMBDA-AUX	*	Q12TG	*	RHRH01AX-HTX-LFB	*	SUR-027-R	+

85	107	9	5.13E-10	0.93234	/CONT-LEAK	*	FA11	*	FAS	*	FS2	*
86					LAMBDA-AUX	*	Q12TG	*	RHRC02AA-P-UUM	*	SCSF06AA-DENER	*
87					SUR-027-R	+						
88	86	8	5.13E-10	0.93500	/CONT-LEAK	*	FA11	*	FAS	*	FS2	*
89					LAMBDA-AUX	*	LCSC002A-P-UUM	*	Q12TG	*	SUR-027-R	+
90	89	8	5.13E-10	0.93765	/CONT-LEAK	*	FA11	*	FAS	*	FS2	*
91					LAMBDA-AUX	*	Q12TG	*	RHRC02AA-P-NDUUM	*	SUR-027-R	+
92	81	8	5.13E-10	0.94031	C0DG01P-P-UUM	*	/CONT-LEAK	*	FA11	*	FAS	*
93					FS2	*	LAMBDA-AUX	*	Q12TG	*	SUR-027-R	+
94	7	8	5.02E-10	0.94291	CONT-LEAK	*	FA11	*	FAS	*	FS2	*
95					LAMBDA-AUX	*	Q12TG	*	RHRF47AA-VOC-LF	*	SUR-002-L	+
96	51	9	5.02E-10	0.94550	CONT-LEAK	*	FA11	*	FAS	*	FS2	*
97					LAMBDA-AUX	*	NOFLOW-RHR-A1	*	Q12TG	*	RHR301AX-STR	*
98					SUR-002-L	+						
99	53	8	5.02E-10	0.94810	CONT-LEAK	*	FA11	*	FAS	*	FS2	*
100					LAMBDA-AUX	*	Q12TG	*	RHRF98AX-XOC-LF	*	SUR-002-L	+
101	25	8	5.02E-10	0.95070	CONT-LEAK	*	FA11	*	FAS	*	FS2	*
102					LAMBDA-AUX	*	Q12TG	*	RHRF03AA-VOC-LF	*	SUR-002-L	+
103	52	9	5.02E-10	0.95329	CONT-LEAK	*	FA11	*	FAS	*	FS2	*
104					LAMBDA-AUX	*	NOFLOW-RHR-A1	*	Q12TG	*	RHRF04AA-VOC-LF	*
105					SUR-002-L	+						
106	26	8	4.56E-10	0.95565	CONT-LEAK	*	FA11	*	FAS	*	FS2	*
107					LAMBDA-AUX	*	Q12TG	*	RHRF31AX-CCC-LF	*	SUR-002-L	+
108	20	8	4.56E-10	0.95801	C0DG002-CCC-LF	*	CONT-LEAK	*	FA11	*	FAS	*
109					FS2	*	LAMBDA-AUX	*	Q12TG	*	SUR-002-L	+
110	106	8	4.28E-10	0.96023	/CONT-LEAK	*	FA11	*	FAS	*	FS2	*
111					LAMBDA-AUX	*	Q12TG	*	RHRB01AA-BOO-CC	*	SUR-027-R	+
112	102	8	4.28E-10	0.96244	C0DG01P-PMS-CC	*	/CONT-LEAK	*	FA11	*	FAS	*
113					FS2	*	LAMBDA-AUX	*	Q12TG	*	SUR-027-R	+
114	99	8	4.28E-10	0.96465	/CONT-LEAK	*	FA11	*	FAS	*	FS2	*
115					LAMBDA-AUX	*	NWVY01CA-FMS-CC	*	Q12TG	*	SUR-027-R	+
116	14	8	3.83E-10	0.96663	CCB0DG1P-BCO-LF	*	CONT-LEAK	*	FA11	*	FAS	*
117					FS2	*	LAMBDA-AUX	*	Q12TG	*	SUR-002-L	+
118	11	8	3.83E-10	0.96862	CCBF068A-BCO-LF	*	CONT-LEAK	*	FA11	*	FAS	*
119					FS2	*	LAMBDA-AUX	*	Q12TG	*	SUR-002-L	+
120	57	8	3.83E-10	0.97060	1EB16211-BCO	*	CONT-LEAK	*	FA11	*	FAS	*
121					FS2	*	LAMBDA-AUX	*	Q12TG	*	SUR-002-L	+
122	48	9	3.42E-10	0.97237	CONT-LEAK	*	FA11	*	FAS	*	FS2	*
123					LAMBDA-AUX	*	LPCI-MOV-BETA	*	LPCI-MOV-CM2	*	Q12TG	*
124					SUR-002-L	+						
125	47	9	3.42E-10	0.97414	CONT-LEAK	*	FA11	*	FAS	*	FS2	*
126					LAMBDA-AUX	*	LPCI-MOV-BETA	*	LPCI-MOV-CM1	*	Q12TG	*
127					SUR-002-L	+						
128	1	8	3.29E-10	0.97584	1EB235XA-BCO-LF	*	CONT-LEAK	*	FA11	*	FAS	*
129					FS2	*	LAMBDA-AUX	*	Q12TG	*	SUR-002-L	+
130	44	8	3.29E-10	0.97754	CONT-LEAK	*	FA11	*	FAS	*	FS2	*
131					LAMBDA-AUX	*	NWVB001X-BCO-LF	*	Q12TG	*	SUR-002-L	+

132	56	8	3.29E-10	0.97924	1EB35Y2X-BCO-LF	*	CONT-LEAK	*	FA11	*	FAS	*
133					FS2	*	LAMBDA-AUX	*	Q12TG	*	SUR-002-L	+
134	39	8	3.29E-10	0.98094	1EB235A-BCO-LF	*	CONT-LEAK	*	FA11	*	FAS	*
135					FS2	*	LAMBDA-AUX	*	Q12TG	*	SUR-002-L	+
136	37	8	3.29E-10	0.98264	1EB235YA-BCO-LF	*	CONT-LEAK	*	FA11	*	FAS	*
137					FS2	*	LAMBDA-AUX	*	Q12TG	*	SUR-002-L	+
138	35	8	3.29E-10	0.98434	1EB211YX-BCO-LF	*	CONT-LEAK	*	FA11	*	FAS	*
139					FS2	*	LAMBDA-AUX	*	Q12TG	*	SUR-002-L	+
140	23	8	3.29E-10	0.98604	1EB1Y22X-BCO	*	CONT-LEAK	*	FA11	*	FAS	*
141					FS2	*	LAMBDA-AUX	*	Q12TG	*	SUR-002-L	+
142	112	8	2.05E-10	0.98710	/CONT-LEAK	*	CSCD300A-PLG-LF	*	FA11	*	FAS	*
143					FS2	*	LAMBDA-AUX	*	Q12TG	*	SUR-027-R	+
144	63	8	1.88E-10	0.98807	/CONT-LEAK	*	FA11	*	FAS	*	FS2	*
145					LAMBDA-AUX	*	Q12TG	*	RHRC02AA-PMS-LF	*	SUR-027-R	+
146	79	8	1.88E-10	0.98905	C0DG01P-PMS-LF	*	/CONT-LEAK	*	FA11	*	FAS	*
147					FS2	*	LAMBDA-AUX	*	Q12TG	*	SUR-027-R	+
148	60	8	1.44E-10	0.98979	/CONT-LEAK	*	FA11	*	FAS	*	FS2	*
149					LAMBDA-AUX	*	NWVY01AX-ACX-LFI	*	Q12TG	*	SUR-027-R	+
150	69	8	1.23E-10	0.99043	/CONT-LEAK	*	EE-CSCD300A-PLG	*	FA11	*	FAS	*
151					FS2	*	LAMBDA-AUX	*	Q12TG	*	SUR-027-R	+
152	10	9	1.10E-10	0.99099	CONT-LEAK	*	FA11	*	FAS	*	FLOW-RHR-A3	*
153					FS2	*	LAMBDA-AUX	*	Q12TG	*	RHRB03AX-BCO-LF	*
154					SUR-002-L	+						
155	91	8	9.93E-11	0.99151	C0DG01F-PLG-LF	*	/CONT-LEAK	*	FA11	*	FAS	*
156					FS2	*	LAMBDA-AUX	*	Q12TG	*	SUR-027-R	+
157	97	8	9.24E-11	0.99198	/CONT-LEAK	*	FA11	*	FAS	*	FS2	*
158					LAMBDA-AUX	*	NWVY01CA-FMS-LF	*	Q12TG	*	SUR-027-R	+
159	111	8	8.56E-11	0.99243	/CONT-LEAK	*	FA11	*	FAS	*	FS2	*
160					LAMBDA-AUX	*	NWVY01CA-F-UUM	*	Q12TG	*	SUR-027-R	+
161	100	9	8.56E-11	0.99287	/CONT-LEAK	*	FA11	*	FAS	*	FLOW-RHR-A3	*
162					FS2	*	LAMBDA-AUX	*	Q12TG	*	RHRF48AA-VOO-LF	*
163					SUR-027-R	+						
164	73	8	8.56E-11	0.99331	/CONT-LEAK	*	FA11	*	FAS	*	FS2	*
165					LAMBDA-AUX	*	Q12TG	*	RHRB01AA-BOO-LF	*	SUR-027-R	+
166	87	8	8.56E-11	0.99375	/CONT-LEAK	*	CSCF068A-VCC-LF	*	FA11	*	FAS	*
167					FS2	*	LAMBDA-AUX	*	Q12TG	*	SUR-027-R	+
168	62	9	5.13E-11	0.99402	/CONT-LEAK	*	FA11	*	FAS	*	FS2	*
169					LAMBDA-AUX	*	Q12TG	*	RHRF88AX-R-UUM	*	SCSF06AA-DENER	*
170					SUR-027-R	+						
171	61	8	5.13E-11	0.99429	/CONT-LEAK	*	FA11	*	FAS	*	FS2	*
172					LAMBDA-AUX	*	PC02AAAX-AOO-LFO	*	Q12TG	*	SUR-027-R	+
173	59	8	5.13E-11	0.99455	/CONT-LEAK	*	FA11	*	FAS	*	FS2	*
174					LAMBDA-AUX	*	Q12TG	*	RHRF87AA-V-UUM	*	SUR-027-R	+
175	95	8	5.13E-11	0.99482	/CONT-LEAK	*	FA11	*	FAS	*	FS2	*
176					LAMBDA-AUX	*	Q12TG	*	RHRF51AA-N-UUM	*	SUR-027-R	+

177	93	9	5.13E-11	0.99508	/CONT-LEAK	*	FA11	*	FAS	*	FLOW-RHR-A3	*
178					FS2	*	LAMBDA-AUX	*	Q12TG	*	RHRF48AA-V-UUM	*
179					SUR-027-R	+						
180	88	9	5.13E-11	0.99535	/CONT-LEAK	*	FA11	*	FAS	*	FS2	*
181					LAMBDA-AUX	*	Q12TG	*	RHRF64AA-V-UUM	*	SCSF06AA-DENER	*
182					SUR-027-R	+						
183	85	8	5.13E-11	0.99561	/CONT-LEAK	*	FA11	*	FAS	*	FS2	*
184					LAMBDA-AUX	*	Q12TG	*	RHRF65AA-N-UUM	*	SUR-027-R	+
185	84	8	5.13E-11	0.99588	/CONT-LEAK	*	FA11	*	FAS	*	FS2	*
186					LAMBDA-AUX	*	Q12TG	*	RHRF74AA-V-UUM	*	SUR-027-R	+
187	78	8	5.13E-11	0.99614	/CONT-LEAK	*	FA11	*	FAS	*	FS2	*
188					LAMBDA-AUX	*	NWVY01AX-A-UUM	*	Q12TG	*	SUR-027-R	+
189	76	9	5.13E-11	0.99641	/CONT-LEAK	*	FA11	*	FAS	*	FS2	*
190					LAMBDA-AUX	*	Q12TG	*	RHRF47AA-V-UUM	*	SCSF06AA-DENER	*
191					SUR-027-R	+						
192	74	8	5.13E-11	0.99668	/CONT-LEAK	*	FA11	*	FAS	*	FS2	*
193					LAMBDA-AUX	*	Q12TG	*	RHRF55AX-R-UUM	*	SUR-027-R	+
194	72	8	5.13E-11	0.99694	/CONT-LEAK	*	FA11	*	FAS	*	FS2	*
195					LAMBDA-AUX	*	Q12TG	*	RHRH01AX-H-UUM	*	SUR-027-R	+
196	70	8	5.13E-11	0.99721	/CONT-LEAK	*	FA11	*	FAS	*	FS2	*
197					LAMBDA-AUX	*	Q12TG	*	SCSF06AA-V-UUM	*	SUR-027-R	+
198	65	8	5.13E-11	0.99747	/CONT-LEAK	*	FA11	*	FAS	*	FS2	*
199					LAMBDA-AUX	*	Q12TG	*	RHRF60AA-S-UUM	*	SUR-027-R	+
200	98	8	5.13E-11	0.99774	/CONT-LEAK	*	CSCF008A-V-UUM	*	FA11	*	FAS	*
201					FS2	*	LAMBDA-AUX	*	Q12TG	*	SUR-027-R	+
202	90	8	5.13E-11	0.99800	/CONT-LEAK	*	CSCD300A-S-UUM	*	FA11	*	FAS	*
203					FS2	*	LAMBDA-AUX	*	Q12TG	*	SUR-027-R	+
204	66	8	5.13E-11	0.99827	C0DG01F-S-UUM	*	/CONT-LEAK	*	FA11	*	FAS	*
205					FS2	*	LAMBDA-AUX	*	Q12TG	*	SUR-027-R	+
206	103	9	4.71E-11	0.99851	/CONT-LEAK	*	FA11	*	FAS	*	FS2	*
207					LAMBDA-AUX	*	LPCI-BETA	*	LPCI-PMS-CM	*	Q12TG	*
208					SUR-027-R	+						
209	110	8	1.88E-11	0.99861	/CONT-LEAK	*	FA11	*	FAS	*	FS2	*
210					LAMBDA-AUX	*	Q12TG	*	RHRF98AX-XOC-LF	*	SUR-027-R	+
211	109	9	1.88E-11	0.99871	/CONT-LEAK	*	FA11	*	FAS	*	FS2	*
212					LAMBDA-AUX	*	NOFLOW-RHR-A1	*	Q12TG	*	RHRF04AA-VOC-LF	*
213					SUR-027-R	+						
214	108	9	1.88E-11	0.99880	/CONT-LEAK	*	FA11	*	FAS	*	FS2	*
215					LAMBDA-AUX	*	NOFLOW-RHR-A1	*	Q12TG	*	RHR301AX-STR	*
216					SUR-027-R	+						
217	82	8	1.88E-11	0.99890	/CONT-LEAK	*	FA11	*	FAS	*	FS2	*
218					LAMBDA-AUX	*	Q12TG	*	RHRF03AA-VOC-LF	*	SUR-027-R	+
219	64	8	1.88E-11	0.99900	/CONT-LEAK	*	FA11	*	FAS	*	FS2	*
220					LAMBDA-AUX	*	Q12TG	*	RHRF47AA-VOC-LF	*	SUR-027-R	+
221	83	8	1.71E-11	0.99909	/CONT-LEAK	*	FA11	*	FAS	*	FS2	*
222					LAMBDA-AUX	*	Q12TG	*	RHRF31AX-CCC-LF	*	SUR-027-R	+

223	77	8	1.71E-11	0.99918	C0DG002-CCC-LF	*	/CONT-LEAK	*	FA11	*	FAS	*
224					FS2	*	LAMBDA-AUX	*	Q12TG	*	SUR-027-R	+
225	114	8	1.44E-11	0.99925	1EB16211-BCO	*	/CONT-LEAK	*	FA11	*	FAS	*
226					FS2	*	LAMBDA-AUX	*	Q12TG	*	SUR-027-R	+
227	71	8	1.44E-11	0.99932	CCB0DG1P-BCO-LF	*	/CONT-LEAK	*	FA11	*	FAS	*
228					FS2	*	LAMBDA-AUX	*	Q12TG	*	SUR-027-R	+
229	68	8	1.44E-11	0.99940	CCBF068A-BCO-LF	*	/CONT-LEAK	*	FA11	*	FAS	*
230					FS2	*	LAMBDA-AUX	*	Q12TG	*	SUR-027-R	+
231	105	9	1.28E-11	0.99947	/CONT-LEAK	*	FA11	*	FAS	*	FS2	*
232					LAMBDA-AUX	*	LPCI-MOV-BETA	*	LPCI-MOV-CM2	*	Q12TG	*
233					SUR-027-R	+						
234	104	9	1.28E-11	0.99953	/CONT-LEAK	*	FA11	*	FAS	*	FS2	*
235					LAMBDA-AUX	*	LPCI-MOV-BETA	*	LPCI-MOV-CM1	*	Q12TG	*
236					SUR-027-R	+						
237	101	8	1.23E-11	0.99960	/CONT-LEAK	*	FA11	*	FAS	*	FS2	*
238					LAMBDA-AUX	*	NWVB001X-BCO-LF	*	Q12TG	*	SUR-027-R	+
239	58	8	1.23E-11	0.99966	1EB235XA-BCO-LF	*	/CONT-LEAK	*	FA11	*	FAS	*
240					FS2	*	LAMBDA-AUX	*	Q12TG	*	SUR-027-R	+
241	113	8	1.23E-11	0.99972	1EB35Y2X-BCO-LF	*	/CONT-LEAK	*	FA11	*	FAS	*
242					FS2	*	LAMBDA-AUX	*	Q12TG	*	SUR-027-R	+
243	96	8	1.23E-11	0.99979	1EB235A-BCO-LF	*	/CONT-LEAK	*	FA11	*	FAS	*
244					FS2	*	LAMBDA-AUX	*	Q12TG	*	SUR-027-R	+
245	94	8	1.23E-11	0.99985	1EB235YA-BCO-LF	*	/CONT-LEAK	*	FA11	*	FAS	*
246					FS2	*	LAMBDA-AUX	*	Q12TG	*	SUR-027-R	+
247	92	8	1.23E-11	0.99991	1EB211YX-BCO-LF	*	/CONT-LEAK	*	FA11	*	FAS	*
248					FS2	*	LAMBDA-AUX	*	Q12TG	*	SUR-027-R	+
249	80	8	1.23E-11	0.99998	1EB1Y22X-BCO	*	/CONT-LEAK	*	FA11	*	FAS	*
250					FS2	*	LAMBDA-AUX	*	Q12TG	*	SUR-027-R	+
251	67	9	4.11E-12	1.00000	/CONT-LEAK	*	FA11	*	FAS	*	FLOW-RHR-A3	*
252					FS2	*	LAMBDA-AUX	*	Q12TG	*	RHRB03AX-BCO-LF	*
253					SUR-027-R							

TEMAC RUN TIME IN CPU SECONDS 176.13

FIRE-T SEQUENCE

TOP EVENT FIRE-T CONTAINS 32 EVENTS IN 53 CUT SETS

THE FREQUENCY OF TOP EVENT FIRE-T IS 2.25E-06

DESCRIPTIVE STATISTICS FOR THE FREQUENCY OF TOP EVENT FIRE-T

N	400
MEAN	2.27E-06
STD DEV	6.71E-06
LOWER 5%	4.48E-08
LOWER 25%	1.90E-07
MEDIAN	6.77E-07
UPPER 25%	1.88E-06
UPPER 5%	7.78E-06

90% UNCERTAINTY INTERVAL FOR TOP EVENT FREQUENCY (INNERMOST BRACKETS DENOTE INTERQUARTILE RANGE, ASTERISK DENOTES MEDIAN, N DENOTES NOMINAL VALUE AND M DENOTES MEAN)

NOMENCLATURE:

PD = PARTIAL DERIVATIVE

TEF = FREQUENCY OF THE TOP EVENT

EV(J) = PROBABILITY OF EVENT J FOR BASE EVENTS
= FREQUENCY OF EVENT J FOR INITIATING EVENTS

MEASURES:

1. FOR BASE EVENTS AND INITIATING EVENTS:

RISK REDUCTION = PD x EV(J)
= TEF - TEF(EVALUATED WITH EV(J) = 0)

2. FOR BASE EVENTS ONLY:

RISK INCREASE = PD - RISK REDUCTION
= PD x (1 - EV(J))
= TEF(EVALUATED WITH EV(J) = 1) - TEF

FIRE-T SEQUENCE
RISK REDUCTION BY BASE EVENT (WITH ASSOCIATED UNCERTAINTY INTERVALS)

BASE EVENT	OCCUR	PROB	(RANK)	RISK REDUCTION	(RANK)	LOWER 5%	UPPER 5%
FS2	53	3.00E-01	(7.0)	2.25E-06	(3.0)	4.48E-08	7.78E-06
FAT	53	6.80E-02	(10.0)	2.25E-06	(3.0)	4.48E-08	7.78E-06
LAMBDA-AUX	53	5.40E-02	(11.0)	2.25E-06	(3.0)	4.48E-08	7.78E-06
Q4TG	53	8.20E-01	(5.0)	2.25E-06	(3.0)	4.48E-08	7.78E-06
FA5	53	8.40E-01	(4.0)	2.25E-06	(3.0)	4.48E-08	7.78E-06
SUR-007-V	17	8.70E-02	(9.0)	2.23E-06	(6.0)	4.00E-08	7.39E-06
RHRH01BX-HTX-LFB	3	6.20E-03	(13.0)	4.10E-07	(7.0)	1.93E-09	1.44E-06
RHRC02BB-P-UUM	3	3.00E-03	(15.5)	1.98E-07	(10.5)	9.37E-10	7.85E-07
RHRC02BB-P-NDUUM	3	3.00E-03	(15.5)	1.98E-07	(10.5)	1.00E-09	6.55E-07
RHRC003B-P-UUM	3	3.00E-03	(15.5)	1.98E-07	(10.5)	9.37E-10	7.85E-07
C2DG01P-P-UUM	3	3.00E-03	(15.5)	1.98E-07	(10.5)	1.00E-09	6.55E-07
FLOW-RHR-B3	6	1.00E+00	(2.0)	1.98E-07	(10.5)		
SCSF06BB-DENER	3	1.00E+00	(2.0)	1.98E-07	(10.5)		
SEVY03CB-FMS-CC	3	2.50E-03	(19.5)	1.65E-07	(15.5)	9.45E-10	6.86E-07
RHRF48BB-VOO-CC	3	2.50E-03	(19.5)	1.65E-07	(15.5)	9.45E-10	6.86E-07
C2DG01P-PMS-CC	3	2.50E-03	(19.5)	1.65E-07	(15.5)	9.45E-10	6.86E-07
RHRB01BB-BOO-CC	3	2.50E-03	(19.5)	1.65E-07	(15.5)	9.45E-10	6.86E-07
CSCD300B-PLG-LF	3	1.20E-03	(23.0)	7.93E-08	(18.0)	2.56E-10	2.40E-07
C2DG01P-PMS-LF	3	1.10E-03	(24.5)	7.27E-08	(19.5)	8.14E-10	2.61E-07
RHRC02BB-PMS-LF	3	1.10E-03	(24.5)	7.27E-08	(19.5)	8.14E-10	2.61E-07
C2DG01F-PLG-LF	3	5.80E-04	(26.0)	3.83E-08	(21.0)	1.32E-10	1.23E-07
RHRF48BB-VOO-LF	3	5.00E-04	(28.0)	3.30E-08	(23.0)	1.68E-10	1.13E-07
RHRB01BB-BOO-LF	3	5.00E-04	(28.0)	3.30E-08	(23.0)	1.49E-10	1.46E-07
CSCF068B-VCC-LF	3	5.00E-04	(28.0)	3.30E-08	(23.0)	1.68E-10	1.13E-07
SUR-002-L	19	1.60E-01	(8.0)	1.96E-08	(25.0)	0.00E+00	1.39E-07
CONT-LEAK	36	7.50E-01	(6.0)	1.88E-08	(26.0)	0.00E+00	1.39E-07
RHR301BX-STR	3	1.10E-04	(30.0)	7.27E-09	(27.5)	3.36E-11	2.77E-08
NOFLOW-RHR-B1	3	1.00E+00	(2.0)	7.27E-09	(27.5)		
1EB36YB-BCO-LF	1	7.20E-05	(31.5)	6.56E-09	(29.5)	0.00E+00	2.78E-08
1EB236B-BCO-LF	1	7.20E-05	(31.5)	6.56E-09	(29.5)	0.00E+00	2.78E-08
OPFAIL-VENT-2H	51	2.10E-03	(22.0)	2.02E-09	(31.0)	-8.74E-09	2.99E-08
SUR-027-R	17	1.80E-02	(12.0)	2.42E-10	(32.0)	0.00E+00	2.64E-09

FIRE-T SEQUENCE
RISK INCREASE BY BASE EVENT (WITH ASSOCIATED UNCERTAINTY INTERVALS)

BASE EVENT	OCCUR	PROB	(RANK)	RISK INCREASE	(RANK)	LOWER 5%	UPPER 5%
1EB236B-BCO-LF	1	7.20E-05	(31.5)	9.10E-05	(1.5)	0.00E+00	9.32E-04
1EB36YB-BCO-LF	1	7.20E-05	(31.5)	9.10E-05	(1.5)	0.00E+00	9.32E-04
RHR301BX-STR	3	1.10E-04	(30.0)	6.61E-05	(3.0)	2.00E-06	2.34E-04
RHRF48BB-VOO-LF	3	5.00E-04	(28.0)	6.60E-05	(5.0)	2.00E-06	2.34E-04
RHRB01BB-BOO-LF	3	5.00E-04	(28.0)	6.60E-05	(5.0)	2.00E-06	2.34E-04
CSCF068B-VCC-LF	3	5.00E-04	(28.0)	6.60E-05	(5.0)	2.00E-06	2.34E-04
C2DG01F-PLG-LF	3	5.80E-04	(26.0)	6.60E-05	(7.0)	2.00E-06	2.34E-04
RHRC02BB-PMS-LF	3	1.10E-03	(24.5)	6.60E-05	(8.5)	2.00E-06	2.34E-04
C2DG01P-PMS-LF	3	1.10E-03	(24.5)	6.60E-05	(8.5)	2.00E-06	2.34E-04
CSCD300B-PLG-LF	3	1.20E-03	(23.0)	6.60E-05	(10.0)	2.00E-06	2.34E-04
RHRF48BB-VOO-CC	3	2.50E-03	(19.5)	6.59E-05	(12.5)	2.00E-06	2.33E-04
C2DG01P-PMS-CC	3	2.50E-03	(19.5)	6.59E-05	(12.5)	2.00E-06	2.33E-04
RHRB01BB-BOO-CC	3	2.50E-03	(19.5)	6.59E-05	(12.5)	2.00E-06	2.33E-04
SEVY03CB-FMS-CC	3	2.50E-03	(19.5)	6.59E-05	(12.5)	2.00E-06	2.33E-04
RHRC02BB-P-UUM	3	3.00E-03	(15.5)	6.59E-05	(16.5)	2.00E-06	2.32E-04
RHRC02BB-P-NDUUM	3	3.00E-03	(15.5)	6.59E-05	(16.5)	2.00E-06	2.34E-04
RHRC003B-P-UUM	3	3.00E-03	(15.5)	6.59E-05	(16.5)	2.00E-06	2.32E-04
C2DG01P-P-UUM	3	3.00E-03	(15.5)	6.59E-05	(16.5)	2.00E-06	2.34E-04
RHRH01BX-HTX-LFB	3	6.20E-03	(13.0)	6.57E-05	(19.0)	2.00E-06	2.31E-04
LAMBDA-AUX	53	5.40E-02	(11.0)	3.93E-05	(20.0)	1.53E-06	1.62E-04
FAT	53	6.80E-02	(10.0)	3.08E-05	(21.0)	9.68E-07	9.67E-05
SUR-007-V	17	8.70E-02	(9.0)	2.34E-05	(22.0)	9.78E-07	7.41E-05
FS2	53	3.00E-01	(7.0)	5.24E-06	(23.0)	1.02E-07	1.86E-05
OPFAIL-VENT-2H	51	2.10E-03	(22.0)	9.59E-07	(24.0)	-3.70E-06	2.38E-05
Q4TG	53	8.20E-01	(5.0)	4.93E-07	(25.0)	1.99E-09	1.71E-06
FA5	53	8.40E-01	(4.0)	4.28E-07	(26.0)	2.35E-09	1.73E-06
SUR-002-L	19	1.60E-01	(8.0)	1.03E-07	(27.0)	0.00E+00	4.13E-07
SUR-027-R	17	1.80E-02	(12.0)	1.32E-08	(28.0)	0.00E+00	4.73E-08
CONT-LEAK	36	7.50E-01	(6.0)	6.28E-09	(29.0)	-2.64E-09	0.00E+00
NOFLOW-RHR-B1	3	1.00E+00	(2.0)	0.00E+00	(31.0)		
SCSF06BB-DENER	3	1.00E+00	(2.0)	0.00E+00	(31.0)		
FLOW-RHR-B3	6	1.00E+00	(2.0)	0.00E+00	(31.0)		

FIRE-T SEQUENCE
UNCERTAINTY IMPORTANCE BY BASE EVENT

BASE EVENT	OCCUR	PROB	(RANK)	% REDUCTION IN THE UNCERTAINTY OF LOG RISK	(RANK)	Y.05/TE.05*	Y.95/TE.95*
LAMBDA-AUX	53	5.40E-02	(11.0)	31.2	(1.0)	1.96	1.18
SUR-007-V	17	8.70E-02	(9.0)	28.2	(2.0)	2.13	1.00
FAT	53	6.80E-02	(10.0)	19.6	(3.0)	1.56	0.99
SUR-027-R	17	1.80E-02	(12.0)	6.1	(4.0)	1.00	1.00
C2DG01P-PMS-CC	3	2.50E-03	(19.5)	6.0	(6.5)	1.36	0.84
SEVY03CB-FMS-CC	3	2.50E-03	(19.5)	6.0	(6.5)	1.36	0.84
RHRF48BB-VOO-CC	3	2.50E-03	(19.5)	6.0	(6.5)	1.36	0.84
RHRB01BB-BOO-CC	3	2.50E-03	(19.5)	6.0	(6.5)	1.36	0.84
Q4TG	53	8.20E-01	(5.0)	4.3	(9.0)	1.07	1.09
RHRC02BB-P-NDUUM	3	3.00E-03	(15.5)	4.3	(10.5)	1.21	1.00
C2DG01P-P-UUM	3	3.00E-03	(15.5)	4.3	(10.5)	1.21	1.00
FS2	53	3.00E-01	(7.0)	3.5	(12.0)	0.98	0.96
RHRC02BB-P-UUM	3	3.00E-03	(15.5)	3.0	(13.5)	1.12	0.88
RHRC003B-P-UUM	3	3.00E-03	(15.5)	3.0	(13.5)	1.12	0.88
RHRH01BX-HTX-LFB	3	6.20E-03	(13.0)	2.4	(15.0)	1.22	0.93
FA5	53	8.40E-01	(4.0)	2.0	(16.0)	1.01	0.96
CSCD300B-PLG-LF	3	1.20E-03	(23.0)	1.4	(17.0)	1.05	1.01
SUR-002-L	19	1.60E-01	(8.0)	1.3	(18.0)	0.92	0.95
1EB236B-BCO-LF	1	7.20E-05	(31.5)	1.3	(19.5)	1.01	0.97
1EB36YB-BCO-LF	1	7.20E-05	(31.5)	1.3	(19.5)	1.01	0.97
RHRB01BB-BOO-LF	3	5.00E-04	(28.0)	1.1	(21.0)	0.99	0.99
C2DG01F-PLG-LF	3	5.80E-04	(26.0)	0.9	(22.0)	1.02	1.01
CONT-LEAK	36	7.50E-01	(6.0)	0.0	(23.0)		
RHRF48BB-VOO-LF	3	5.00E-04	(28.0)	0.0	(26.5)		
RHRC02BB-PMS-LF	3	1.10E-03	(24.5)	0.0	(26.5)		
C2DG01P-PMS-LF	3	1.10E-03	(24.5)	0.0	(26.5)		
RHR301BX-STR	3	1.10E-04	(30.0)	0.0	(26.5)		
CSCF068B-VCC-LF	3	5.00E-04	(28.0)	0.0	(26.5)		
OPFAIL-VENT-2H	51	2.10E-03	(22.0)	0.0	(26.5)		
NOFLOW-RHR-B1	3	1.00E+00	(2.0)				
SCSF06BB-DENER	3	1.00E+00	(2.0)				
FLOW-RHR-B3	6	1.00E+00	(2.0)				

FIRE-T SEQUENCE

CUT SET NUMBERS, CUT SET ORDERS, CUT SET FREQUENCIES,
CUMULATIVE NORMALIZED CUT SET FREQUENCIES AND CUT SETS
FOR TOP EVENT FIRE-T WITH TOP EVENT FREQUENCY 2.25E-06

(THE FIRST COLUMN OF NUMBERS IS THE LINE NUMBERS FOR THE FILE TEMACSETS.DNF)

2	46	8	4.08E-07	0.18187	FA5	*	FAT	*	FS2	*	LAMBDA-AUX	*
3					/OPFAIL-VENT-2H	*	Q4TG	*	RHRH01BX-HTX-LFB	*	SUR-007-V	+
4	43	8	1.98E-07	0.26987	FA5	*	FAT	*	FS2	*	LAMBDA-AUX	*
5					/OPFAIL-VENT-2H	*	Q4TG	*	RHRC003B-P-UUM	*	SUR-007-V	+
6	40	9	1.98E-07	0.35787	FA5	*	FAT	*	FS2	*	LAMBDA-AUX	*
7					/OPFAIL-VENT-2H	*	Q4TG	*	RHRC02BB-P-UUM	*	SCSF06BB-DENER	*
8					SUR-007-V	+						
9	41	8	1.98E-07	0.44587	FA5	*	FAT	*	FS2	*	LAMBDA-AUX	*
10					/OPFAIL-VENT-2H	*	Q4TG	*	RHRC02BB-P-NDUUM	*	SUR-007-V	+
11	47	8	1.98E-07	0.53387	C2DG01P-P-UUM	*	FA5	*	FAT	*	FS2	*
12					LAMBDA-AUX	*	/OPFAIL-VENT-2H	*	Q4TG	*	SUR-007-V	+
13	48	9	1.65E-07	0.60720	FA5	*	FAT	*	FLOW-RHR-B3	*	FS2	*
14					LAMBDA-AUX	*	/OPFAIL-VENT-2H	*	Q4TG	*	RHRF48BB-VOO-CC	*
15					SUR-007-V	+						
16	45	8	1.65E-07	0.68054	FA5	*	FAT	*	FS2	*	LAMBDA-AUX	*
17					/OPFAIL-VENT-2H	*	Q4TG	*	SEVY03CB-FMS-CC	*	SUR-007-V	+
18	49	8	1.65E-07	0.75387	FA5	*	FAT	*	FS2	*	LAMBDA-AUX	*
19					/OPFAIL-VENT-2H	*	Q4TG	*	RHRB01BB-BOO-CC	*	SUR-007-V	+
20	38	8	1.65E-07	0.82720	C2DG01P-PMS-CC	*	FA5	*	FAT	*	FS2	*
21					LAMBDA-AUX	*	/OPFAIL-VENT-2H	*	Q4TG	*	SUR-007-V	+
22	37	8	7.91E-08	0.86240	CSCD300B-PLG-LF	*	FA5	*	FAT	*	FS2	*
23					LAMBDA-AUX	*	/OPFAIL-VENT-2H	*	Q4TG	*	SUR-007-V	+
24	50	8	7.25E-08	0.89467	C2DG01P-PMS-LF	*	FA5	*	FAT	*	FS2	*
25					LAMBDA-AUX	*	/OPFAIL-VENT-2H	*	Q4TG	*	SUR-007-V	+
26	44	8	7.25E-08	0.92694	FA5	*	FAT	*	FS2	*	LAMBDA-AUX	*
27					/OPFAIL-VENT-2H	*	Q4TG	*	RHRC02BB-PMS-LF	*	SUR-007-V	+
28	51	8	3.82E-08	0.94395	C2DG01F-PLG-LF	*	FA5	*	FAT	*	FS2	*
29					LAMBDA-AUX	*	/OPFAIL-VENT-2H	*	Q4TG	*	SUR-007-V	+
30	52	8	3.29E-08	0.95862	CSCF068B-VCC-LF	*	FA5	*	FAT	*	FS2	*
31					LAMBDA-AUX	*	/OPFAIL-VENT-2H	*	Q4TG	*	SUR-007-V	+
32	42	9	3.29E-08	0.97328	FA5	*	FAT	*	FLOW-RHR-B3	*	FS2	*
33					LAMBDA-AUX	*	/OPFAIL-VENT-2H	*	Q4TG	*	RHRF48BB-VOO-LF	*
34					SUR-007-V	+						
35	39	8	3.29E-08	0.98795	FA5	*	FAT	*	FS2	*	LAMBDA-AUX	*
36					/OPFAIL-VENT-2H	*	Q4TG	*	RHRB01BB-BOO-LF	*	SUR-007-V	+
37	53	9	7.25E-09	0.99118	FA5	*	FAT	*	FS2	*	LAMBDA-AUX	*
38					NOFLOW-RHR-B1	*	/OPFAIL-VENT-2H	*	Q4TG	*	RHR301BX-STR	*
39					SUR-007-V	+						

40	1	8	6.56E-09	0.99410	1EB36YB-BCO-LF	*	CONT-LEAK	*	FA5	*	FAT	*
41					FS2	*	LAMBDA-AUX	*	Q4TG	*	SUR-002-L	+
42	2	8	6.56E-09	0.99702	1EB236B-BCO-LF	*	CONT-LEAK	*	FA5	*	FAT	*
43					FS2	*	LAMBDA-AUX	*	Q4TG	*	SUR-002-L	+
44	12	9	1.19E-09	0.99754	CONT-LEAK	*	FA5	*	FAT	*	FS2	*
45					LAMBDA-AUX	*	OPFAIL-VENT-2H	*	Q4TG	*	RHRH01BX-HTX-LFB	*
46					SUR-002-L	+						
47	13	9	5.74E-10	0.99780	C2DG01P-P-UUM	*	CONT-LEAK	*	FA5	*	FAT	*
48					FS2	*	LAMBDA-AUX	*	OPFAIL-VENT-2H	*	Q4TG	*
49					SUR-002-L	+						
50	7	9	5.74E-10	0.99805	CONT-LEAK	*	FA5	*	FAT	*	FS2	*
51					LAMBDA-AUX	*	OPFAIL-VENT-2H	*	Q4TG	*	RHRC02BB-P-NDUUM	*
52					SUR-002-L	+						
53	6	10	5.74E-10	0.99831	CONT-LEAK	*	FA5	*	FAT	*	FS2	*
54					LAMBDA-AUX	*	OPFAIL-VENT-2H	*	Q4TG	*	RHRC02BB-P-UUM	*
55					SCSF06BB-DENER	*	SUR-002-L	+				
56	9	9	5.74E-10	0.99856	CONT-LEAK	*	FA5	*	FAT	*	FS2	*
57					LAMBDA-AUX	*	OPFAIL-VENT-2H	*	Q4TG	*	RHRC003B-P-UUM	*
58					SUR-002-L	+						
59	15	9	4.78E-10	0.99878	CONT-LEAK	*	FA5	*	FAT	*	FS2	*
60					LAMBDA-AUX	*	OPFAIL-VENT-2H	*	Q4TG	*	RHRB01BB-BOO-CC	*
61					SUR-002-L	+						
62	14	10	4.78E-10	0.99899	CONT-LEAK	*	FA5	*	FAT	*	FLOW-RHR-B3	*
63					FS2	*	LAMBDA-AUX	*	OPFAIL-VENT-2H	*	Q4TG	*
64					RHRF48BB-VOO-CC	*	SUR-002-L	+				
65	11	9	4.78E-10	0.99920	CONT-LEAK	*	FA5	*	FAT	*	FS2	*
66					LAMBDA-AUX	*	OPFAIL-VENT-2H	*	Q4TG	*	SEVY03CB-FMS-CC	*
67					SUR-002-L	+						
68	4	9	4.78E-10	0.99942	C2DG01P-PMS-CC	*	CONT-LEAK	*	FA5	*	FAT	*
69					FS2	*	LAMBDA-AUX	*	OPFAIL-VENT-2H	*	Q4TG	*
70					SUR-002-L	+						
71	3	9	2.29E-10	0.99952	CONT-LEAK	*	CSCD300B-PLG-LF	*	FA5	*	FAT	*
72					FS2	*	LAMBDA-AUX	*	OPFAIL-VENT-2H	*	Q4TG	*
73					SUR-002-L	+						
74	10	9	2.10E-10	0.99961	CONT-LEAK	*	FA5	*	FAT	*	FS2	*
75					LAMBDA-AUX	*	OPFAIL-VENT-2H	*	Q4TG	*	RHRC02BB-PMS-LF	*
76					SUR-002-L	+						
77	16	9	2.10E-10	0.99971	C2DG01P-PMS-LF	*	CONT-LEAK	*	FA5	*	FAT	*
78					FS2	*	LAMBDA-AUX	*	OPFAIL-VENT-2H	*	Q4TG	*
79					SUR-002-L	+						
80	17	9	1.11E-10	0.99975	C2DG01F-PLG-LF	*	CONT-LEAK	*	FA5	*	FAT	*
81					FS2	*	LAMBDA-AUX	*	OPFAIL-VENT-2H	*	Q4TG	*
82					SUR-002-L	+						
83	5	9	9.56E-11	0.99980	CONT-LEAK	*	FA5	*	FAT	*	FS2	*
84					LAMBDA-AUX	*	OPFAIL-VENT-2H	*	Q4TG	*	RHRB01BB-BOO-LF	*
85					SUR-002-L	+						

86	18	9	9.56E-11	0.99984	CONT-LEAK	*	CSCF068B-VCC-LF	*	FA5	*	FAT	*
87					FS2	*	LAMBDA-AUX	*	OPFAIL-VENT-2H	*	Q4TG	*
88					SUR-002-L	+						
89	8	10	9.56E-11	0.99988	CONT-LEAK	*	FA5	*	FAT	*	FLOW-RHR-B3	*
90					FS2	*	LAMBDA-AUX	*	OPFAIL-VENT-2H	*	Q4TG	*
91					RHRF48BB-VOO-LF	*	SUR-002-L	+				
92	29	9	4.45E-11	0.99990	/CONT-LEAK	*	FA5	*	FAT	*	FS2	*
93					LAMBDA-AUX	*	OPFAIL-VENT-2H	*	Q4TG	*	RHRH01BX-HTX-LFB	*
94					SUR-027-R	+						
95	30	9	2.15E-11	0.99991	C2DG01P-P-UUM	*	/CONT-LEAK	*	FA5	*	FAT	*
96					FS2	*	LAMBDA-AUX	*	OPFAIL-VENT-2H	*	Q4TG	*
97					SUR-027-R	+						
98	26	9	2.15E-11	0.99992	/CONT-LEAK	*	FA5	*	FAT	*	FS2	*
99					LAMBDA-AUX	*	OPFAIL-VENT-2H	*	Q4TG	*	RHRC003B-P-UUM	*
100					SUR-027-R	+						
101	24	9	2.15E-11	0.99993	/CONT-LEAK	*	FA5	*	FAT	*	FS2	*
102					LAMBDA-AUX	*	OPFAIL-VENT-2H	*	Q4TG	*	RHRC02BB-P-NDUUM	*
103					SUR-027-R	+						
104	23	10	2.15E-11	0.99994	/CONT-LEAK	*	FA5	*	FAT	*	FS2	*
105					LAMBDA-AUX	*	OPFAIL-VENT-2H	*	Q4TG	*	RHRC02BB-P-UUM	*
106					SCSF06BB-DENER	*	SUR-027-R	+				
107	19	10	2.10E-11	0.99995	CONT-LEAK	*	FA5	*	FAT	*	FS2	*
108					LAMBDA-AUX	*	NOFLOW-RHR-B1	*	OPFAIL-VENT-2H	*	Q4TG	*
109					RHR301BX-STR	*	SUR-002-L	+				
110	31	10	1.79E-11	0.99996	/CONT-LEAK	*	FA5	*	FAT	*	FLOW-RHR-B3	*
111					FS2	*	LAMBDA-AUX	*	OPFAIL-VENT-2H	*	Q4TG	*
112					RHRF48BB-VOO-CC	*	SUR-027-R	+				
113	28	9	1.79E-11	0.99997	/CONT-LEAK	*	FA5	*	FAT	*	FS2	*
114					LAMBDA-AUX	*	OPFAIL-VENT-2H	*	Q4TG	*	SEVY03CB-FMS-CC	*
115					SUR-027-R	+						
116	21	9	1.79E-11	0.99997	C2DG01P-PMS-CC	*	/CONT-LEAK	*	FA5	*	FAT	*
117					FS2	*	LAMBDA-AUX	*	OPFAIL-VENT-2H	*	Q4TG	*
118					SUR-027-R	+						
119	32	9	1.79E-11	0.99998	/CONT-LEAK	*	FA5	*	FAT	*	FS2	*
120					LAMBDA-AUX	*	OPFAIL-VENT-2H	*	Q4TG	*	RHRB01BB-BOO-CC	*
121					SUR-027-R	+						
122	20	9	8.60E-12	0.99999	/CONT-LEAK	*	CSCD300B-PLG-LF	*	FA5	*	FAT	*
123					FS2	*	LAMBDA-AUX	*	OPFAIL-VENT-2H	*	Q4TG	*
124					SUR-027-R	+						
125	27	9	7.89E-12	0.99999	/CONT-LEAK	*	FA5	*	FAT	*	FS2	*
126					LAMBDA-AUX	*	OPFAIL-VENT-2H	*	Q4TG	*	RHRC02BB-PMS-LF	*
127					SUR-027-R	+						
128	33	9	7.89E-12	0.99999	C2DG01P-PMS-LF	*	/CONT-LEAK	*	FA5	*	FAT	*
129					FS2	*	LAMBDA-AUX	*	OPFAIL-VENT-2H	*	Q4TG	*
130					SUR-027-R	+						

131	34	9	4.16E-12	0.99999	C2DG01F-PLG-LF	*	/CONT-LEAK	*	FA5	*	FAT	*
132					FS2	*	LAMBDA-AUX	*	OPFAIL-VENT-2H	*	Q4TG	*
133					SUR-027-R	+						
134	35	9	3.59E-12	1.00000	/CONT-LEAK	*	CSCF068B-VCC-LF	*	FA5	*	FAT	*
135					FS2	*	LAMBDA-AUX	*	OPFAIL-VENT-2H	*	Q4TG	*
136					SUR-027-R	+						
137	25	10	3.59E-12	1.00000	/CONT-LEAK	*	FA5	*	FAT	*	FLOW-RHR-B3	*
138					FS2	*	LAMBDA-AUX	*	OPFAIL-VENT-2H	*	Q4TG	*
139					RHRF48BB-VOO-LF	*	SUR-027-R	+				
140	22	9	3.59E-12	1.00000	/CONT-LEAK	*	FA5	*	FAT	*	FS2	*
141					LAMBDA-AUX	*	OPFAIL-VENT-2H	*	Q4TG	*	RHRB01BB-BOO-LF	*
142					SUR-027-R	+						
143	36	10	7.89E-13	1.00000	/CONT-LEAK	*	FA5	*	FAT	*	FS2	*
144					LAMBDA-AUX	*	NOFLOW-RHR-B1	*	OPFAIL-VENT-2H	*	Q4TG	*
145					RHR301BX-STR	*	SUR-027-R	.				

TEMAC RUN TIME IN CPU SECONDS 64.92

FIRE-W1 SEQUENCE

TOP EVENT FIRE-W1 CONTAINS 68 EVENTS IN 114 CUT SETS

THE FREQUENCY OF TOP EVENT FIRE-W1 IS 6.98E-07

DESCRIPTIVE STATISTICS FOR THE FREQUENCY OF TOP EVENT FIRE-W1

N	400
MEAN	1.80E-06
STD DEV	1.82E-05
LOWER 5%	0.00E+00
LOWER 25%	0.00E+00
MEDIAN	0.00E+00
UPPER 25%	6.70E-08
UPPER 5%	1.87E-06

90% UNCERTAINTY INTERVAL FOR TOP EVENT FREQUENCY (INNERMOST BRACKETS DENOTE INTERQUARTILE RANGE, ASTERISK DENOTES MEDIAN, N DENOTES NOMINAL VALUE AND M DENOTES MEAN)

NOMENCLATURE:

PD = PARTIAL DERIVATIVE

TEF = FREQUENCY OF THE TOP EVENT

EV(J) = PROBABILITY OF EVENT J FOR BASE EVENTS
= FREQUENCY OF EVENT J FOR INITIATING EVENTS

MEASURES:

1. FOR BASE EVENTS AND INITIATING EVENTS:

RISK REDUCTION = PD x EV(J)
= TEF - TEF(EVALUATED WITH EV(J) = 0)

2. FOR BASE EVENTS ONLY:

RISK INCREASE = PD - RISK REDUCTION
= PD x (1 - EV(J))
= TEF(EVALUATED WITH EV(J) = 1) - TEF

FIRE-W1 SEQUENCE
RISK REDUCTION BY BASE EVENT (WITH ASSOCIATED UNCERTAINTY INTERVALS)

BASE EVENT	OCCUR	PROB	(RANK)	RISK REDUCTION	(RANK)	LOWER 5%	UPPER 5%
FR1	114	1.00E-02	(11.0)	6.98E-07	(2.0)	0.00E+00	1.87E-06
LAMBDA-SVGR	114	1.40E-02	(10.0)	6.98E-07	(2.0)	0.00E+00	1.87E-06
Q5TG	114	9.80E-01	(4.0)	6.98E-07	(2.0)	0.00E+00	1.87E-06
SUR-002-L	57	1.60E-01	(6.0)	6.72E-07	(4.0)	0.00E+00	1.73E-06
CONT-LEAK	114	7.50E-01	(5.0)	5.97E-07	(5.0)	0.00E+00	1.73E-06
RHRH01AX-HTX-LFB	2	6.20E-03	(12.0)	1.06E-07	(6.0)	0.00E+00	2.94E-07
SCSF06AA-DENER	8	1.00E+00	(2.0)	6.66E-08	(7.0)		
LCSC002A-P-UUM	2	3.00E-03	(14.5)	5.12E-08	(9.5)	0.00E+00	1.06E-07
C0DG01P-P-UUM	2	3.00E-03	(14.5)	5.12E-08	(9.5)	0.00E+00	8.87E-08
RHRC02AA-P-NDUUM	2	3.00E-03	(14.5)	5.12E-08	(9.5)	0.00E+00	8.87E-08
RHRC02AA-P-UUM	2	3.00E-03	(14.5)	5.12E-08	(9.5)	0.00E+00	1.06E-07
RHRB01AA-BOO-CC	2	2.50E-03	(19.5)	4.27E-08	(13.0)	0.00E+00	8.48E-08
C0DG01P-PMS-CC	2	2.50E-03	(19.5)	4.27E-08	(13.0)	0.00E+00	8.48E-08
NWVY01CA-FMS-CC	2	2.50E-03	(19.5)	4.27E-08	(13.0)	0.00E+00	8.48E-08
SUR-027-R	57	1.80E-02	(9.0)	2.52E-08	(15.0)	0.00E+00	1.19E-07
CSCD300A-PLG-LF	2	1.20E-03	(23.0)	2.05E-08	(16.0)	0.00E+00	4.78E-08
RHRC02AA-PMS-LF	2	1.10E-03	(24.5)	1.88E-08	(17.5)	0.00E+00	4.49E-08
C0DG01P-PMS-LF	2	1.10E-03	(24.5)	1.88E-08	(17.5)	0.00E+00	4.49E-08
NWVY01AX-ACX-LFI	2	8.40E-04	(26.0)	1.43E-08	(19.0)	0.00E+00	2.54E-08
FLOW-RHR-A3	6	1.00E+00	(2.0)	1.41E-08	(20.0)		
EE-CSCD300A-PLG	2	7.20E-04	(27.0)	1.23E-08	(21.0)	0.00E+00	3.04E-08
C0DG01F-PLG-LF	2	5.80E-04	(28.0)	9.91E-09	(22.0)	0.00E+00	2.42E-08
NWVY01CA-FMS-LF	2	5.40E-04	(29.0)	9.22E-09	(23.0)	0.00E+00	2.28E-08
RHRB01AA-BOO-LF	2	5.00E-04	(31.5)	8.54E-09	(25.5)	0.00E+00	2.33E-08
CSCF068A-VCC-LF	2	5.00E-04	(31.5)	8.54E-09	(25.5)	0.00E+00	1.63E-08
NWVY01CA-F-UUM	2	5.00E-04	(31.5)	8.54E-09	(25.5)	0.00E+00	2.53E-08
RHRF48AA-VOO-LF	2	5.00E-04	(31.5)	8.54E-09	(25.5)	0.00E+00	1.63E-08
RHRF87AA-V-UUM	2	3.00E-04	(42.0)	5.12E-09	(36.0)	0.00E+00	1.19E-08
RHRF65AA-N-UUM	2	3.00E-04	(42.0)	5.12E-09	(36.0)	0.00E+00	1.19E-08
RHRH01AX-H-UUM	2	3.00E-04	(42.0)	5.12E-09	(36.0)	0.00E+00	1.08E-08
RHRF88AX-R-UUM	2	3.00E-04	(42.0)	5.12E-09	(36.0)	0.00E+00	1.19E-08
RHRF51AA-N-UUM	2	3.00E-04	(42.0)	5.12E-09	(36.0)	0.00E+00	1.19E-08
RHRF48AA-V-UUM	2	3.00E-04	(42.0)	5.12E-09	(36.0)	0.00E+00	1.19E-08
RHRF47AA-V-UUM	2	3.00E-04	(42.0)	5.12E-09	(36.0)	0.00E+00	1.19E-08
RHRF64AA-V-UUM	2	3.00E-04	(42.0)	5.12E-09	(36.0)	0.00E+00	1.19E-08
RHRF55AX-R-UUM	2	3.00E-04	(42.0)	5.12E-09	(36.0)	0.00E+00	1.19E-08
RHRF60AA-S-UUM	2	3.00E-04	(42.0)	5.12E-09	(36.0)	0.00E+00	1.19E-08
C0DG01F-S-UUM	2	3.00E-04	(42.0)	5.12E-09	(36.0)	0.00E+00	1.08E-08
PC02AAAX-AOO-LFO	2	3.00E-04	(42.0)	5.12E-09	(36.0)	0.00E+00	1.22E-08
CSCF008A-V-UUM	2	3.00E-04	(42.0)	5.12E-09	(36.0)	0.00E+00	1.19E-08

CSCD300A-S-UUM	2	3.00E-04 (42.0)	5.12E-09 (36.0)	0.00E+00	1.08E-08
SCSF06AA-V-UUM	2	3.00E-04 (42.0)	5.12E-09 (36.0)	0.00E+00	1.19E-08
NWVY01AX-A-UUM	2	3.00E-04 (42.0)	5.12E-09 (36.0)	0.00E+00	1.08E-08
RHRF74AA-V-UUM	2	3.00E-04 (42.0)	5.12E-09 (36.0)	0.00E+00	1.19E-08
LPCI-PMS-CM	2	2.50E-03 (19.5)	4.70E-09 (45.5)	0.00E+00	5.66E-09
LPCI-BETA	2	1.10E-01 (7.0)	4.70E-09 (45.5)	0.00E+00	5.66E-09
NOFLOW-RHR-A1	4	1.00E+00 (2.0)	3.76E-09 (47.0)		
LPCI-MOV-BETA	4	3.00E-02 (8.0)	2.56E-09 (48.0)	0.00E+00	3.65E-09
RHRF98AX-XOC-LF	2	1.10E-04 (53.0)	1.88E-09 (51.0)	0.00E+00	5.63E-09
RHRF47AA-VOC-LF	2	1.10E-04 (53.0)	1.88E-09 (51.0)	0.00E+00	5.63E-09
RHRF04AA-VOC-LF	2	1.10E-04 (53.0)	1.88E-09 (51.0)	0.00E+00	5.63E-09
RHRF03AA-VOC-LF	2	1.10E-04 (53.0)	1.88E-09 (51.0)	0.00E+00	5.63E-09
RHR301AX-STR	2	1.10E-04 (53.0)	1.88E-09 (51.0)	0.00E+00	3.62E-09
RHRF31AX-CCC-LF	2	1.00E-04 (56.5)	1.71E-09 (54.5)	0.00E+00	6.01E-09
C0DG002-CCC-LF	2	1.00E-04 (56.5)	1.71E-09 (54.5)	0.00E+00	6.01E-09
CCBF068A-BCO-LF	2	8.40E-05 (59.0)	1.43E-09 (57.0)	0.00E+00	3.37E-09
CCB0DG1P-BCO-LF	2	8.40E-05 (59.0)	1.43E-09 (57.0)	0.00E+00	3.37E-09
1EB16211-BCO	2	8.40E-05 (59.0)	1.43E-09 (57.0)	0.00E+00	3.37E-09
LPCI-MOV-CM2	2	2.50E-03 (19.5)	1.28E-09 (59.5)	0.00E+00	1.82E-09
LPCI-MOV-CM1	2	2.50E-03 (19.5)	1.28E-09 (59.5)	0.00E+00	1.82E-09
1EB35Y2X-BCO-LF	2	7.20E-05 (64.0)	1.23E-09 (64.0)	0.00E+00	2.44E-09
1EB235YA-BCO-LF	2	7.20E-05 (64.0)	1.23E-09 (64.0)	0.00E+00	2.44E-09
1EB211YX-BCO-LF	2	7.20E-05 (64.0)	1.23E-09 (64.0)	0.00E+00	2.44E-09
1EB235XA-BCO-LF	2	7.20E-05 (64.0)	1.23E-09 (64.0)	0.00E+00	2.44E-09
1EB1Y22X-BCO	2	7.20E-05 (64.0)	1.23E-09 (64.0)	0.00E+00	2.44E-09
NWVB001X-BCO-LF	2	7.20E-05 (64.0)	1.23E-09 (64.0)	0.00E+00	2.44E-09
1EB235A-BCO-LF	2	7.20E-05 (64.0)	1.23E-09 (64.0)	0.00E+00	2.44E-09
RHRB03AX-BCO-LF	2	2.40E-05 (68.0)	4.10E-10 (68.0)	0.00E+00	7.85E-10

FIRE-W1 SEQUENCE
RISK INCREASE BY BASE EVENT (WITH ASSOCIATED UNCERTAINTY INTERVALS)

BASE EVENT	OCCUR	PROB	(RANK)	RISK INCREASE	(RANK)	LOWER 5%	UPPER 5%
FR1	114	1.00E-02	(11.0)	6.91E-05	(1.0)	0.00E+00	2.18E-04
LAMBDA-SVGR	114	1.40E-02	(10.0)	4.91E-05	(2.0)	0.00E+00	3.77E-04
RHRB03AX-BCO-LF	2	2.40E-05	(68.0)	1.71E-05	(3.0)	0.00E+00	5.16E-05
1EB235A-BCO-LF	2	7.20E-05	(64.0)	1.71E-05	(7.0)	0.00E+00	5.16E-05
1EB35Y2X-BCO-LF	2	7.20E-05	(64.0)	1.71E-05	(7.0)	0.00E+00	5.16E-05
NWVB001X-BCO-LF	2	7.20E-05	(64.0)	1.71E-05	(7.0)	0.00E+00	5.16E-05
1EB235XA-BCO-LF	2	7.20E-05	(64.0)	1.71E-05	(7.0)	0.00E+00	5.16E-05
1EB1Y22X-BCO	2	7.20E-05	(64.0)	1.71E-05	(7.0)	0.00E+00	5.16E-05
1EB235YA-BCO-LF	2	7.20E-05	(64.0)	1.71E-05	(7.0)	0.00E+00	5.16E-05
1EB211YX-BCO-LF	2	7.20E-05	(64.0)	1.71E-05	(7.0)	0.00E+00	5.16E-05
1EB16211-BCO	2	8.40E-05	(59.0)	1.71E-05	(12.0)	0.00E+00	5.16E-05
CCB0DG1P-BCO-LF	2	8.40E-05	(59.0)	1.71E-05	(12.0)	0.00E+00	5.16E-05
CCBF068A-BCO-LF	2	8.40E-05	(59.0)	1.71E-05	(12.0)	0.00E+00	5.16E-05
RHRF31AX-CCC-LF	2	1.00E-04	(56.5)	1.71E-05	(14.5)	0.00E+00	5.16E-05
C0DG002-CCC-LF	2	1.00E-04	(56.5)	1.71E-05	(14.5)	0.00E+00	5.16E-05
RHRF98AX-XOC-LF	2	1.10E-04	(53.0)	1.71E-05	(18.0)	0.00E+00	5.16E-05
RHRF04AA-VOC-LF	2	1.10E-04	(53.0)	1.71E-05	(18.0)	0.00E+00	5.16E-05
RHRF03AA-VOC-LF	2	1.10E-04	(53.0)	1.71E-05	(18.0)	0.00E+00	5.16E-05
RHR301AX-STR	2	1.10E-04	(53.0)	1.71E-05	(18.0)	0.00E+00	5.16E-05
RHRF47AA-VOC-LF	2	1.10E-04	(53.0)	1.71E-05	(18.0)	0.00E+00	5.16E-05
RHRF87AA-V-UUM	2	3.00E-04	(42.0)	1.71E-05	(29.0)	0.00E+00	5.16E-05
RHRF64AA-V-UUM	2	3.00E-04	(42.0)	1.71E-05	(29.0)	0.00E+00	5.16E-05
RHRF60AA-S-UUM	2	3.00E-04	(42.0)	1.71E-05	(29.0)	0.00E+00	5.16E-05
RHRF51AA-N-UUM	2	3.00E-04	(42.0)	1.71E-05	(29.0)	0.00E+00	5.16E-05
NWVY01AX-A-UUM	2	3.00E-04	(42.0)	1.71E-05	(29.0)	0.00E+00	5.16E-05
RHRF47AA-V-UUM	2	3.00E-04	(42.0)	1.71E-05	(29.0)	0.00E+00	5.16E-05
RHRF74AA-V-UUM	2	3.00E-04	(42.0)	1.71E-05	(29.0)	0.00E+00	5.16E-05
RHRF65AA-N-UUM	2	3.00E-04	(42.0)	1.71E-05	(29.0)	0.00E+00	5.16E-05
RHRF88AX-R-UUM	2	3.00E-04	(42.0)	1.71E-05	(29.0)	0.00E+00	5.16E-05
RHRH01AX-H-UUM	2	3.00E-04	(42.0)	1.71E-05	(29.0)	0.00E+00	5.16E-05
RHRF48AA-V-UUM	2	3.00E-04	(42.0)	1.71E-05	(29.0)	0.00E+00	5.16E-05
RHRF55AX-R-UUM	2	3.00E-04	(42.0)	1.71E-05	(29.0)	0.00E+00	5.16E-05
C0DG01F-S-UUM	2	3.00E-04	(42.0)	1.71E-05	(29.0)	0.00E+00	5.16E-05
CSCF008A-V-UUM	2	3.00E-04	(42.0)	1.71E-05	(29.0)	0.00E+00	5.16E-05
PC02AAAX-AOO-LFO	2	3.00E-04	(42.0)	1.71E-05	(29.0)	0.00E+00	5.16E-05
CSCD300A-S-UUM	2	3.00E-04	(42.0)	1.71E-05	(29.0)	0.00E+00	5.16E-05
SCSF06AA-V-UUM	2	3.00E-04	(42.0)	1.71E-05	(29.0)	0.00E+00	5.16E-05
RHRF48AA-VOO-LF	2	5.00E-04	(31.5)	1.71E-05	(39.5)	0.00E+00	5.15E-05
RHRB01AA-BOO-LF	2	5.00E-04	(31.5)	1.71E-05	(39.5)	0.00E+00	5.16E-05
CSCF068A-VCC-LF	2	5.00E-04	(31.5)	1.71E-05	(39.5)	0.00E+00	5.15E-05

NWVY01CA-F-UUM	2	5.00E-04	(31.5)	1.71E-05	(39.5)	0.00E+00	5.15E-05
NWVY01CA-FMS-LF	2	5.40E-04	(29.0)	1.71E-05	(42.0)	0.00E+00	5.15E-05
C0DG01F-PLG-LF	2	5.80E-04	(28.0)	1.71E-05	(43.0)	0.00E+00	5.15E-05
EE-CSCD300A-PLG	2	7.20E-04	(27.0)	1.71E-05	(44.0)	0.00E+00	5.16E-05
NWVY01AX-ACX-LFI	2	8.40E-04	(26.0)	1.71E-05	(45.0)	0.00E+00	5.16E-05
C0DG01P-PMS-LF	2	1.10E-03	(24.5)	1.71E-05	(46.5)	0.00E+00	5.15E-05
RHRC02AA-PMS-LF	2	1.10E-03	(24.5)	1.71E-05	(46.5)	0.00E+00	5.15E-05
CSCD300A-PLG-LF	2	1.20E-03	(23.0)	1.71E-05	(48.0)	0.00E+00	5.14E-05
C0DG01P-PMS-CC	2	2.50E-03	(19.5)	1.70E-05	(50.0)	0.00E+00	5.15E-05
RHRB01AA-BOO-CC	2	2.50E-03	(19.5)	1.70E-05	(50.0)	0.00E+00	5.15E-05
NWVY01CA-FMS-CC	2	2.50E-03	(19.5)	1.70E-05	(50.0)	0.00E+00	5.15E-05
LCSC002A-P-UUM	2	3.00E-03	(14.5)	1.70E-05	(53.5)	0.00E+00	5.15E-05
RHRC02AA-P-UUM	2	3.00E-03	(14.5)	1.70E-05	(53.5)	0.00E+00	5.15E-05
RHRC02AA-P-NDUUM	2	3.00E-03	(14.5)	1.70E-05	(53.5)	0.00E+00	4.99E-05
C0DG01P-P-UUM	2	3.00E-03	(14.5)	1.70E-05	(53.5)	0.00E+00	4.99E-05
RHRH01AX-HTX-LFB	2	6.20E-03	(12.0)	1.70E-05	(56.0)	0.00E+00	5.09E-05
SUR-002-L	57	1.60E-01	(6.0)	3.53E-06	(57.0)	0.00E+00	1.41E-05
LPCI-PMS-CM	2	2.50E-03	(19.5)	1.87E-06	(58.0)	0.00E+00	5.42E-06
SUR-027-R	57	1.80E-02	(9.0)	1.38E-06	(59.0)	0.00E+00	2.01E-06
LPCI-MOV-CM2	2	2.50E-03	(19.5)	5.11E-07	(60.5)	0.00E+00	1.61E-06
LPCI-MOV-CM1	2	2.50E-03	(19.5)	5.11E-07	(60.5)	0.00E+00	1.61E-06
CONT-LEAK	114	7.50E-01	(5.0)	1.99E-07	(62.0)	-1.19E-07	0.00E+00
LPCI-MOV-BETA	4	3.00E-02	(8.0)	8.28E-08	(63.0)	0.00E+00	1.63E-07
LPCI-BETA	2	1.10E-01	(7.0)	3.80E-08	(64.0)	0.00E+00	8.06E-08
Q5TG	114	9.80E-01	(4.0)	1.42E-08	(65.0)	0.00E+00	3.43E-08
NOFLOW-RHR-A1	4	1.00E+00	(2.0)	0.00E+00	(67.0)		
FLOW-RHR-A3	6	1.00E+00	(2.0)	0.00E+00	(67.0)		
SCSF06AA-DENER	8	1.00E+00	(2.0)	0.00E+00	(67.0)		

FIRE-W1 SEQUENCE
UNCERTAINTY IMPORTANCE BY BASE EVENT

BASE EVENT	OCCUR	PROB	(RANK)	% REDUCTION IN THE UNCERTAINTY OF LOG RISK	(RANK)	Y.05/TE.05*	Y.95/TE.95*
SUR-002-L	57	1.60E-01	(6.0)	46.6	(1.0)	NA	1.52
SUR-027-R	57	1.80E-02	(9.0)	17.4	(2.0)	NA	1.00
CONT-LEAK	114	7.50E-01	(5.0)	10.0	(3.0)	NA	0.75
LAMBDA-SVGR	114	1.40E-02	(10.0)	5.2	(4.0)	NA	3.07
RHRH01AX-HTX-LFB	2	6.20E-03	(12.0)	3.1	(5.0)	NA	1.00
FR1	114	1.00E-02	(11.0)	2.7	(6.0)	NA	1.18
RHRC02AA-P-NDUUM	2	3.00E-03	(14.5)	2.2	(7.5)	NA	1.10
C0DG01P-P-UUM	2	3.00E-03	(14.5)	2.2	(7.5)	NA	1.10
RHR301AX-STR	2	1.10E-04	(53.0)	2.2	(9.0)	NA	1.00
CSCF068A-VCC-LF	2	5.00E-04	(31.5)	1.7	(10.5)	NA	1.03
RHRF48AA-VOO-LF	2	5.00E-04	(31.5)	1.7	(10.5)	NA	1.03
RHRB01AA-BOO-LF	2	5.00E-04	(31.5)	1.7	(12.0)	NA	1.01
Q5TG	114	9.80E-01	(4.0)	1.6	(13.0)	NA	1.00
NWVY01AX-ACX-LFI	2	8.40E-04	(26.0)	1.5	(14.0)	NA	1.03
EE-CSCD300A-PLG	2	7.20E-04	(27.0)	1.5	(15.0)	NA	1.02
RHRF74AA-V-UUM	2	3.00E-04	(42.0)	1.5	(21.5)	NA	1.07
RHRF48AA-V-UUM	2	3.00E-04	(42.0)	1.5	(21.5)	NA	1.07
RHRF47AA-V-UUM	2	3.00E-04	(42.0)	1.5	(21.5)	NA	1.07
RHRF51AA-N-UUM	2	3.00E-04	(42.0)	1.5	(21.5)	NA	1.07
RHRF65AA-N-UUM	2	3.00E-04	(42.0)	1.5	(21.5)	NA	1.07
RHRF64AA-V-UUM	2	3.00E-04	(42.0)	1.5	(21.5)	NA	1.07
RHRF87AA-V-UUM	2	3.00E-04	(42.0)	1.5	(21.5)	NA	1.07
RHRF60AA-S-UUM	2	3.00E-04	(42.0)	1.5	(21.5)	NA	1.07
CSCF008A-V-UUM	2	3.00E-04	(42.0)	1.5	(21.5)	NA	1.07
RHRF88AX-R-UUM	2	3.00E-04	(42.0)	1.5	(21.5)	NA	1.07
SCSF06AA-V-UUM	2	3.00E-04	(42.0)	1.5	(21.5)	NA	1.07
RHRF55AX-R-UUM	2	3.00E-04	(42.0)	1.5	(21.5)	NA	1.07
NWVY01CA-FMS-LF	2	5.40E-04	(29.0)	1.5	(28.0)	NA	1.01
LPCI-MOV-BETA	4	3.00E-02	(8.0)	1.4	(29.0)	NA	1.00
RHRB03AX-BCO-LF	2	2.40E-05	(68.0)	1.3	(30.0)	NA	1.00
LPCI-BETA	2	1.10E-01	(7.0)	1.2	(31.0)	NA	1.00
RHRF47AA-VOC-LF	2	1.10E-04	(53.0)	1.0	(33.5)	NA	1.00
RHRF04AA-VOC-LF	2	1.10E-04	(53.0)	1.0	(33.5)	NA	1.00
RHRF03AA-VOC-LF	2	1.10E-04	(53.0)	1.0	(33.5)	NA	1.00
RHRF98AX-XOC-LF	2	1.10E-04	(53.0)	1.0	(33.5)	NA	1.00
CSCD300A-PLG-LF	2	1.20E-03	(23.0)	0.9	(36.0)	NA	1.00
C0DG01F-PLG-LF	2	5.80E-04	(28.0)	0.8	(37.0)	NA	1.00
LCSC002A-P-UUM	2	3.00E-03	(14.5)	0.5	(38.5)	NA	1.15
RHRC02AA-P-UUM	2	3.00E-03	(14.5)	0.5	(38.5)	NA	1.15
C0DG01F-S-UUM	2	3.00E-04	(42.0)	0.3	(41.5)	NA	0.99

RHRH01AX-H-UUM	2	3.00E-04 (42.0)	0.3	(41.5)	NA	0.99
CSCD300A-S-UUM	2	3.00E-04 (42.0)	0.3	(41.5)	NA	0.99
NWVY01AX-A-UUM	2	3.00E-04 (42.0)	0.3	(41.5)	NA	0.99
CCBF068A-BCO-LF	2	8.40E-05 (59.0)	0.0	(54.5)		
LPCI-PMS-CM	2	2.50E-03 (19.5)	0.0	(54.5)		
1EB35Y2X-BCO-LF	2	7.20E-05 (64.0)	0.0	(54.5)		
LPCI-MOV-CM2	2	2.50E-03 (19.5)	0.0	(54.5)		
LPCI-MOV-CM1	2	2.50E-03 (19.5)	0.0	(54.5)		
CCB0DG1P-BCO-LF	2	8.40E-05 (59.0)	0.0	(54.5)		
1EB211YX-BCO-LF	2	7.20E-05 (64.0)	0.0	(54.5)		
C0DG01P-PMS-LF	2	1.10E-03 (24.5)	0.0	(54.5)		
RHRF31AX-CCC-LF	2	1.00E-04 (56.5)	0.0	(54.5)		
C0DG01P-PMS-CC	2	2.50E-03 (19.5)	0.0	(54.5)		
1EB235YA-BCO-LF	2	7.20E-05 (64.0)	0.0	(54.5)		
RHRC02AA-PMS-LF	2	1.10E-03 (24.5)	0.0	(54.5)		
1EB235XA-BCO-LF	2	7.20E-05 (64.0)	0.0	(54.5)		
RHRB01AA-BOO-CC	2	2.50E-03 (19.5)	0.0	(54.5)		
1EB16211-BCO	2	8.40E-05 (59.0)	0.0	(54.5)		
PC02AAAX-AOO-LFO	2	3.00E-04 (42.0)	0.0	(54.5)		
NWVY01CA-FMS-CC	2	2.50E-03 (19.5)	0.0	(54.5)		
NWVY01CA-F-UUM	2	5.00E-04 (31.5)	0.0	(54.5)		
NWVB001X-BCO-LF	2	7.20E-05 (64.0)	0.0	(54.5)		
C0DG002-CCC-LF	2	1.00E-04 (56.5)	0.0	(54.5)		
1EB235A-BCO-LF	2	7.20E-05 (64.0)	0.0	(54.5)		
1EB1Y22X-BCO	2	7.20E-05 (64.0)	0.0	(54.5)		
NOFLOW-RHR-A1	4	1.00E+00 (2.0)				
FLOW-RHR-A3	6	1.00E+00 (2.0)				
SCSF06AA-DENER	8	1.00E+00 (2.0)				

FIRE-W1 SEQUENCE

CUT SET NUMBERS, CUT SET ORDERS, CUT SET FREQUENCIES,
CUMULATIVE NORMALIZED CUT SET FREQUENCIES AND CUT SETS
FOR TOP EVENT FIRE-W1 WITH TOP EVENT FREQUENCY 6.98E-07

(THE FIRST COLUMN OF NUMBERS IS THE LINE NUMBERS FOR THE FILE TEMACSETS.DNF)

2	18	6	1.02E-07	0.14634	CONT-LEAK	*	FR1	*	LAMBDA-SVGR	*	Q5TG	*
3					RHRH01AX-HTX-LFB	*	SUR-002-L	+				
4	24	6	4.94E-08	0.21715	C0DG01P-P-UUM	*	CONT-LEAK	*	FR1	*	LAMBDA-SVGR	*
5					Q5TG	*	SUR-002-L	+				
6	50	7	4.94E-08	0.28796	CONT-LEAK	*	FR1	*	LAMBDA-SVGR	*	Q5TG	*
7					RHRC02AA-P-UUM	*	SCSF06AA-DENER	*	SUR-002-L	+		
8	32	6	4.94E-08	0.35878	CONT-LEAK	*	FR1	*	LAMBDA-SVGR	*	Q5TG	*
9					RHRC02AA-P-NDUUM	*	SUR-002-L	+				
10	29	6	4.94E-08	0.42959	CONT-LEAK	*	FR1	*	LAMBDA-SVGR	*	LCSC002A-P-UUM	*
11					Q5TG	*	SUR-002-L	+				
12	45	6	4.12E-08	0.48860	C0DG01P-PMS-CC	*	CONT-LEAK	*	FR1	*	LAMBDA-SVGR	*
13					Q5TG	*	SUR-002-L	+				
14	49	6	4.12E-08	0.54760	CONT-LEAK	*	FR1	*	LAMBDA-SVGR	*	Q5TG	*
15					RHRB01AA-BOO-CC	*	SUR-002-L	+				
16	42	6	4.12E-08	0.60661	CONT-LEAK	*	FR1	*	LAMBDA-SVGR	*	NWVY01CA-FMS-CC	*
17					Q5TG	*	SUR-002-L	+				
18	55	6	1.98E-08	0.63494	CONT-LEAK	*	CSCD300A-PLG-LF	*	FR1	*	LAMBDA-SVGR	*
19					Q5TG	*	SUR-002-L	+				
20	22	6	1.81E-08	0.66090	C0DG01P-PMS-LF	*	CONT-LEAK	*	FR1	*	LAMBDA-SVGR	*
21					Q5TG	*	SUR-002-L	+				
22	6	6	1.81E-08	0.68687	CONT-LEAK	*	FR1	*	LAMBDA-SVGR	*	Q5TG	*
23					RHRC02AA-PMS-LF	*	SUR-002-L	+				
24	3	6	1.38E-08	0.70669	CONT-LEAK	*	FR1	*	LAMBDA-SVGR	*	NWVY01AX-ACX-LFI	*
25					Q5TG	*	SUR-002-L	+				
26	12	6	1.19E-08	0.72369	CONT-LEAK	*	EE-CSCD300A-PLG	*	FR1	*	LAMBDA-SVGR	*
27					Q5TG	*	SUR-002-L	+				
28	34	6	9.55E-09	0.73738	C0DG01F-PLG-LF	*	CONT-LEAK	*	FR1	*	LAMBDA-SVGR	*
29					Q5TG	*	SUR-002-L	+				
30	40	6	8.89E-09	0.75012	CONT-LEAK	*	FR1	*	LAMBDA-SVGR	*	NWVY01CA-FMS-LF	*
31					Q5TG	*	SUR-002-L	+				
32	30	6	8.23E-09	0.76193	CONT-LEAK	*	CSCF068A-VCC-LF	*	FR1	*	LAMBDA-SVGR	*
33					Q5TG	*	SUR-002-L	+				
34	54	6	8.23E-09	0.77373	CONT-LEAK	*	FR1	*	LAMBDA-SVGR	*	NWVY01CA-F-UUM	*
35					Q5TG	*	SUR-002-L	+				
36	16	6	8.23E-09	0.78553	CONT-LEAK	*	FR1	*	LAMBDA-SVGR	*	Q5TG	*
37					RHRB01AA-BOO-LF	*	SUR-002-L	+				
38	43	7	8.23E-09	0.79733	CONT-LEAK	*	FLOW-RHR-A3	*	FR1	*	LAMBDA-SVGR	*
39					Q5TG	*	RHRF48AA-VOO-LF	*	SUR-002-L	+		

40	15	6	4.94E-09	0.80441	CONT-LEAK	*	FR1	*	LAMBDA-SVGR	*	Q5TG	*	
41					RHRH01AX-H-UUM	*	SUR-002-L	+					
42	33	6	4.94E-09	0.81149	CONT-LEAK	*	CSCD300A-S-UUM	*	FR1	*	LAMBDA-SVGR	*	
43					Q5TG	*	SUR-002-L	+					
44	9	6	4.94E-09	0.81858	C0DG01F-S-UUM	*	CONT-LEAK	*	FR1	*	LAMBDA-SVGR	*	
45					Q5TG	*	SUR-002-L	+					
46	41	6	4.94E-09	0.82566	CONT-LEAK	*	CSCF008A-V-UUM	*	FR1	*	LAMBDA-SVGR	*	
47					Q5TG	*	SUR-002-L	+					
48	5	7	4.94E-09	0.83274	CONT-LEAK	*	FR1	*	LAMBDA-SVGR	*	Q5TG	*	
49					RHRF88AX-R-UUM	*	SCSF06AA-DENER	*	SUR-002-L	+			
50	38	6	4.94E-09	0.83982	CONT-LEAK	*	FR1	*	LAMBDA-SVGR	*	Q5TG	*	
51					RHRF51AA-N-UUM	*	SUR-002-L	+					
52	36	7	4.94E-09	0.84690	CONT-LEAK	*	FLOW-RHR-A3	*	FR1	*	LAMBDA-SVGR	*	
53					Q5TG	*	RHRF48AA-V-UUM	*	SUR-002-L	+			
54	27	6	4.94E-09	0.85398	CONT-LEAK	*	FR1	*	LAMBDA-SVGR	*	Q5TG	*	
55					RHRF74AA-V-UUM	*	SUR-002-L	+					
56	19	7	4.94E-09	0.86106	CONT-LEAK	*	FR1	*	LAMBDA-SVGR	*	Q5TG	*	
57					RHRF47AA-V-UUM	*	SCSF06AA-DENER	*	SUR-002-L	+			
58	13	6	4.94E-09	0.86814	CONT-LEAK	*	FR1	*	LAMBDA-SVGR	*	Q5TG	*	
59					SCSF06AA-V-UUM	*	SUR-002-L	+					
60	31	7	4.94E-09	0.87522	CONT-LEAK	*	FR1	*	LAMBDA-SVGR	*	Q5TG	*	
61					RHRF64AA-V-UUM	*	SCSF06AA-DENER	*	SUR-002-L	+			
62	2	6	4.94E-09	0.88230	CONT-LEAK	*	FR1	*	LAMBDA-SVGR	*	Q5TG	*	
63					RHRF87AA-V-UUM	*	SUR-002-L	+					
64	4	6	4.94E-09	0.88939	CONT-LEAK	*	FR1	*	LAMBDA-SVGR	*	PC02AAAX-AOO-LFO	*	
65					Q5TG	*	SUR-002-L	+					
66	17	6	4.94E-09	0.89647	CONT-LEAK	*	FR1	*	LAMBDA-SVGR	*	Q5TG	*	
67					RHRF55AX-R-UUM	*	SUR-002-L	+					
68	28	6	4.94E-09	0.90355	CONT-LEAK	*	FR1	*	LAMBDA-SVGR	*	Q5TG	*	
69					RHRF65AA-N-UUM	*	SUR-002-L	+					
70	8	6	4.94E-09	0.91063	CONT-LEAK	*	FR1	*	LAMBDA-SVGR	*	Q5TG	*	
71					RHRF60AA-S-UUM	*	SUR-002-L	+					
72	21	6	4.94E-09	0.91771	CONT-LEAK	*	FR1	*	LAMBDA-SVGR	*	NWVY01AX-A-UUM	*	
73					Q5TG	*	SUR-002-L	+					
74	46	7	4.53E-09	0.92420	CONT-LEAK	*	FR1	*	LAMBDA-SVGR	*	LPCI-BETA	*	
75					LPCI-PMS-CM	*	Q5TG	*	SUR-002-L	+			
76	75	6	3.83E-09	0.92969	/CONT-LEAK	*	FR1	*	LAMBDA-SVGR	*	Q5TG	*	
77					RHRH01AX-HTX-LFB	*	SUR-027-R	+					
78	107	7	1.85E-09	0.93234	/CONT-LEAK	*	FR1	*	LAMBDA-SVGR	*	Q5TG	*	
79					RHRC02AA-P-UUM	*	SCSF06AA-DENER	*	SUR-027-R	+			
80	86	6	1.85E-09	0.93500	/CONT-LEAK	*	FR1	*	LAMBDA-SVGR	*	LCSC002A-P-UUM	*	
81					Q5TG	*	SUR-027-R	+					
82	89	6	1.85E-09	0.93766	/CONT-LEAK	*	FR1	*	LAMBDA-SVGR	*	Q5TG	*	
83					RHRC02AA-P-NDUUM	*	SUR-027-R	+					
84	81	6	1.85E-09	0.94031	C0DG01P-P-UUM	*	/CONT-LEAK	*	FR1	*	LAMBDA-SVGR	*	
85					Q5TG	*	SUR-027-R	+					

86	7	6	1.81E-09	0.94291	CONT-LEAK	*	FR1	*	LAMBDA-SVGR	*	Q5TG	*
87					RHRF47AA-VOC-LF	*	SUR-002-L	+				
88	51	7	1.81E-09	0.94550	CONT-LEAK	*	FR1	*	LAMBDA-SVGR	*	NOFLOW-RHR-A1	*
89					Q5TG	*	RHR301AX-STR	*	SUR-002-L	+		
90	53	6	1.81E-09	0.94810	CONT-LEAK	*	FR1	*	LAMBDA-SVGR	*	Q5TG	*
91					RHRF98AX-XOC-LF	*	SUR-002-L	+				
92	25	6	1.81E-09	0.95070	CONT-LEAK	*	FR1	*	LAMBDA-SVGR	*	Q5TG	*
93					RHRF03AA-VOC-LF	*	SUR-002-L	+				
94	52	7	1.81E-09	0.95329	CONT-LEAK	*	FR1	*	LAMBDA-SVGR	*	NOFLOW-RHR-A1	*
95					Q5TG	*	RHRF04AA-VOC-LF	*	SUR-002-L	+		
96	20	6	1.65E-09	0.95565	C0DG002-CCC-LF	*	CONT-LEAK	*	FR1	*	LAMBDA-SVGR	*
97					Q5TG	*	SUR-002-L	+				
98	26	6	1.65E-09	0.95801	CONT-LEAK	*	FR1	*	LAMBDA-SVGR	*	Q5TG	*
99					RHRF31AX-CCC-LF	*	SUR-002-L	+				
100	106	6	1.54E-09	0.96023	/CONT-LEAK	*	FR1	*	LAMBDA-SVGR	*	Q5TG	*
101					RHRB01AA-BOO-CC	*	SUR-027-R	+				
102	102	6	1.54E-09	0.96244	C0DG01P-PMS-CC	*	/CONT-LEAK	*	FR1	*	LAMBDA-SVGR	*
103					Q5TG	*	SUR-027-R	+				
104	99	6	1.54E-09	0.96465	/CONT-LEAK	*	FR1	*	LAMBDA-SVGR	*	NWVY01CA-FMS-CC	*
105					Q5TG	*	SUR-027-R	+				
106	14	6	1.38E-09	0.96663	CCB0DG1P-BCO-LF	*	CONT-LEAK	*	FR1	*	LAMBDA-SVGR	*
107					Q5TG	*	SUR-002-L	+				
108	11	6	1.38E-09	0.96862	CCBF068A-BCO-LF	*	CONT-LEAK	*	FR1	*	LAMBDA-SVGR	*
109					Q5TG	*	SUR-002-L	+				
110	57	6	1.38E-09	0.97060	1EB16211-BCO	*	CONT-LEAK	*	FR1	*	LAMBDA-SVGR	*
111					Q5TG	*	SUR-002-L	+				
112	48	7	1.23E-09	0.97237	CONT-LEAK	*	FR1	*	LAMBDA-SVGR	*	LPCI-MOV-BETA	*
113					LPCI-MOV-CM2	*	Q5TG	*	SUR-002-L	+		
114	47	7	1.23E-09	0.97414	CONT-LEAK	*	FR1	*	LAMBDA-SVGR	*	LPCI-MOV-BETA	*
115					LPCI-MOV-CM1	*	Q5TG	*	SUR-002-L	+		
116	1	6	1.19E-09	0.97584	1EB235XA-BCO-LF	*	CONT-LEAK	*	FR1	*	LAMBDA-SVGR	*
117					Q5TG	*	SUR-002-L	+				
118	44	6	1.19E-09	0.97754	CONT-LEAK	*	FR1	*	LAMBDA-SVGR	*	NWVB001X-BCO-LF	*
119					Q5TG	*	SUR-002-L	+				
120	23	6	1.19E-09	0.97924	1EB1Y22X-BCO	*	CONT-LEAK	*	FR1	*	LAMBDA-SVGR	*
121					Q5TG	*	SUR-002-L	+				
122	56	6	1.19E-09	0.98094	1EB35Y2X-BCO-LF	*	CONT-LEAK	*	FR1	*	LAMBDA-SVGR	*
123					Q5TG	*	SUR-002-L	+				
124	39	6	1.19E-09	0.98264	1EB235A-BCO-LF	*	CONT-LEAK	*	FR1	*	LAMBDA-SVGR	*
125					Q5TG	*	SUR-002-L	+				
126	37	6	1.19E-09	0.98434	1EB235YA-BCO-LF	*	CONT-LEAK	*	FR1	*	LAMBDA-SVGR	*
127					Q5TG	*	SUR-002-L	+				
128	35	6	1.19E-09	0.98604	1EB211YX-BCO-LF	*	CONT-LEAK	*	FR1	*	LAMBDA-SVGR	*
129					Q5TG	*	SUR-002-L	+				
130	112	6	7.41E-10	0.98710	/CONT-LEAK	*	CSCD300A-PLG-LF	*	FR1	*	LAMBDA-SVGR	*
131					Q5TG	*	SUR-027-R	+				

132	63	6	6.79E-10	0.98807	/CONT-LEAK	*	FR1	*	LAMBDA-SVGR	*	Q5TG	*	
133					RHRC02AA-PMS-LF	*	SUR-027-R	+					
134	79	6	6.79E-10	0.98905	C0DG01P-PMS-LF	*	/CONT-LEAK	*	FR1	*	LAMBDA-SVGR	*	
135					Q5TG	*	SUR-027-R	+					
136	60	6	5.19E-10	0.98979	/CONT-LEAK	*	FR1	*	LAMBDA-SVGR	*	NWVY01AX-ACX-LFI	*	
137					Q5TG	*	SUR-027-R	+					
138	69	6	4.45E-10	0.99043	/CONT-LEAK	*	EE-CSCD300A-PLG	*	FR1	*	LAMBDA-SVGR	*	
139					Q5TG	*	SUR-027-R	+					
140	10	7	3.95E-10	0.99099	CONT-LEAK	*	FLOW-RHR-A3	*	FR1	*	LAMBDA-SVGR	*	
141					Q5TG	*	RHRB03AX-BCO-LF	*	SUR-002-L	+			
142	91	6	3.58E-10	0.99151	C0DG01F-PLG-LF	*	/CONT-LEAK	*	FR1	*	LAMBDA-SVGR	*	
143					Q5TG	*	SUR-027-R	+					
144	97	6	3.33E-10	0.99198	/CONT-LEAK	*	FR1	*	LAMBDA-SVGR	*	NWVY01CA-FMS-LF	*	
145					Q5TG	*	SUR-027-R	+					
146	111	6	3.09E-10	0.99243	/CONT-LEAK	*	FR1	*	LAMBDA-SVGR	*	NWVY01CA-F-UUM	*	
147					Q5TG	*	SUR-027-R	+					
148	100	7	3.09E-10	0.99287	/CONT-LEAK	*	FLOW-RHR-A3	*	FR1	*	LAMBDA-SVGR	*	
149					Q5TG	*	RHRF48AA-VOO-LF	*	SUR-027-R	+			
150	87	6	3.09E-10	0.99331	/CONT-LEAK	*	CSCF068A-VCC-LF	*	FR1	*	LAMBDA-SVGR	*	
151					Q5TG	*	SUR-027-R	+					
152	73	6	3.09E-10	0.99375	/CONT-LEAK	*	FR1	*	LAMBDA-SVGR	*	Q5TG	*	
153					RHRB01AA-BOO-LF	*	SUR-027-R	+					
154	62	7	1.85E-10	0.99402	/CONT-LEAK	*	FR1	*	LAMBDA-SVGR	*	Q5TG	*	
155					RHRF88AX-R-UUM	*	SCSF06AA-DENER	*	SUR-027-R	+			
156	59	6	1.85E-10	0.99429	/CONT-LEAK	*	FR1	*	LAMBDA-SVGR	*	Q5TG	*	
157					RHRF87AA-V-UUM	*	SUR-027-R	+					
158	95	6	1.85E-10	0.99455	/CONT-LEAK	*	FR1	*	LAMBDA-SVGR	*	Q5TG	*	
159					RHRF51AA-N-UUM	*	SUR-027-R	+					
160	93	7	1.85E-10	0.99482	/CONT-LEAK	*	FLOW-RHR-A3	*	FR1	*	LAMBDA-SVGR	*	
161					Q5TG	*	RHRF48AA-V-UUM	*	SUR-027-R	+			
162	88	7	1.85E-10	0.99508	/CONT-LEAK	*	FR1	*	LAMBDA-SVGR	*	Q5TG	*	
163					RHRF64AA-V-UUM	*	SCSF06AA-DENER	*	SUR-027-R	+			
164	85	6	1.85E-10	0.99535	/CONT-LEAK	*	FR1	*	LAMBDA-SVGR	*	Q5TG	*	
165					RHRF65AA-N-UUM	*	SUR-027-R	+					
166	84	6	1.85E-10	0.99561	/CONT-LEAK	*	FR1	*	LAMBDA-SVGR	*	Q5TG	*	
167					RHRF74AA-V-UUM	*	SUR-027-R	+					
168	76	7	1.85E-10	0.99588	/CONT-LEAK	*	FR1	*	LAMBDA-SVGR	*	Q5TG	*	
169					RHRF47AA-V-UUM	*	SCSF06AA-DENER	*	SUR-027-R	+			
170	74	6	1.85E-10	0.99614	/CONT-LEAK	*	FR1	*	LAMBDA-SVGR	*	Q5TG	*	
171					RHRF55AX-R-UUM	*	SUR-027-R	+					
172	72	6	1.85E-10	0.99641	/CONT-LEAK	*	FR1	*	LAMBDA-SVGR	*	Q5TG	*	
173					RHRH01AX-H-UUM	*	SUR-027-R	+					
174	70	6	1.85E-10	0.99668	/CONT-LEAK	*	FR1	*	LAMBDA-SVGR	*	Q5TG	*	
175					SCSF06AA-V-UUM	*	SUR-027-R	+					
176	65	6	1.85E-10	0.99694	/CONT-LEAK	*	FR1	*	LAMBDA-SVGR	*	Q5TG	*	
177					RHRF60AA-S-UUM	*	SUR-027-R	+					

178	61	6	1.85E-10	0.99721	/CONT-LEAK	*	FR1	*	LAMBDA-SVGR	*	PC02AAAX-AOO-LFO	*
179					Q5TG	*	SUR-027-R	+				
180	98	6	1.85E-10	0.99747	/CONT-LEAK	*	CSCF008A-V-UUM	*	FR1	*	LAMBDA-SVGR	*
181					Q5TG	*	SUR-027-R	+				
182	90	6	1.85E-10	0.99774	/CONT-LEAK	*	CSCD300A-S-UUM	*	FR1	*	LAMBDA-SVGR	*
183					Q5TG	*	SUR-027-R	+				
184	78	6	1.85E-10	0.99800	/CONT-LEAK	*	FR1	*	LAMBDA-SVGR	*	NWVY01AX-A-UUM	*
185					Q5TG	*	SUR-027-R	+				
186	66	6	1.85E-10	0.99827	C0DG01F-S-UUM	*	/CONT-LEAK	*	FR1	*	LAMBDA-SVGR	*
187					Q5TG	*	SUR-027-R	+				
188	103	7	1.70E-10	0.99851	/CONT-LEAK	*	FR1	*	LAMBDA-SVGR	*	LPCI-BETA	*
189					LPCI-PMS-CM	*	Q5TG	*	SUR-027-R	+		
190	110	6	6.79E-11	0.99861	/CONT-LEAK	*	FR1	*	LAMBDA-SVGR	*	Q5TG	*
191					RHRF98AX-XOC-LF	*	SUR-027-R	+				
192	109	7	6.79E-11	0.99871	/CONT-LEAK	*	FR1	*	LAMBDA-SVGR	*	NOFLOW-RHR-A1	*
193					Q5TG	*	RHRF04AA-VOC-LF	*	SUR-027-R	+		
194	108	7	6.79E-11	0.99880	/CONT-LEAK	*	FR1	*	LAMBDA-SVGR	*	NOFLOW-RHR-A1	*
195					Q5TG	*	RHR301AX-STR	*	SUR-027-R	+		
196	82	6	6.79E-11	0.99890	/CONT-LEAK	*	FR1	*	LAMBDA-SVGR	*	Q5TG	*
197					RHRF03AA-VOC-LF	*	SUR-027-R	+				
198	64	6	6.79E-11	0.99900	/CONT-LEAK	*	FR1	*	LAMBDA-SVGR	*	Q5TG	*
199					RHRF47AA-VOC-LF	*	SUR-027-R	+				
200	83	6	6.17E-11	0.99909	/CONT-LEAK	*	FR1	*	LAMBDA-SVGR	*	Q5TG	*
201					RHRF31AX-CCC-LF	*	SUR-027-R	+				
202	77	6	6.17E-11	0.99918	C0DG002-CCC-LF	*	/CONT-LEAK	*	FR1	*	LAMBDA-SVGR	*
203					Q5TG	*	SUR-027-R	+				
204	114	6	5.19E-11	0.99925	1EB16211-BCO	*	/CONT-LEAK	*	FR1	*	LAMBDA-SVGR	*
205					Q5TG	*	SUR-027-R	+				
206	71	6	5.19E-11	0.99933	CCB0DG1P-BCO-LF	*	/CONT-LEAK	*	FR1	*	LAMBDA-SVGR	*
207					Q5TG	*	SUR-027-R	+				
208	68	6	5.19E-11	0.99940	CCBF068A-BCO-LF	*	/CONT-LEAK	*	FR1	*	LAMBDA-SVGR	*
209					Q5TG	*	SUR-027-R	+				
210	105	7	4.63E-11	0.99947	/CONT-LEAK	*	FR1	*	LAMBDA-SVGR	*	LPCI-MOV-BETA	*
211					LPCI-MOV-CM2	*	Q5TG	*	SUR-027-R	+		
212	104	7	4.63E-11	0.99953	/CONT-LEAK	*	FR1	*	LAMBDA-SVGR	*	LPCI-MOV-BETA	*
213					LPCI-MOV-CM1	*	Q5TG	*	SUR-027-R	+		
214	101	6	4.45E-11	0.99960	/CONT-LEAK	*	FR1	*	LAMBDA-SVGR	*	NWVB001X-BCO-LF	*
215					Q5TG	*	SUR-027-R	+				
216	58	6	4.45E-11	0.99966	1EB235XA-BCO-LF	*	/CONT-LEAK	*	FR1	*	LAMBDA-SVGR	*
217					Q5TG	*	SUR-027-R	+				
218	113	6	4.45E-11	0.99972	1EB35Y2X-BCO-LF	*	/CONT-LEAK	*	FR1	*	LAMBDA-SVGR	*
219					Q5TG	*	SUR-027-R	+				
220	96	6	4.45E-11	0.99979	1EB235A-BCO-LF	*	/CONT-LEAK	*	FR1	*	LAMBDA-SVGR	*
221					Q5TG	*	SUR-027-R	+				
222	94	6	4.45E-11	0.99985	1EB235YA-BCO-LF	*	/CONT-LEAK	*	FR1	*	LAMBDA-SVGR	*
223					Q5TG	*	SUR-027-R	+				

```
224      92   6  4.45E-11   0.99991      1EB211YX-BCO-LF  * /CONT-LEAK        *  FR1              *  LAMBDA-SVGR      *
225                                      Q5TG             *  SUR-027-R        +
226      80   6  4.45E-11   0.99998      1EB1Y22X-BCO     * /CONT-LEAK        *  FR1              *  LAMBDA-SVGR      *
227                                      Q5TG             *  SUR-027-R        +
228      67   7  1.48E-11   1.00000     /CONT-LEAK        *  FLOW-RHR-A3      *  FR1              *  LAMBDA-SVGR      *
229                                      Q5TG             *  RHRB03AX-BCO-LF  *  SUR-027-R        .


TEMAC RUN TIME IN CPU SECONDS     160.96
```

FIRE-W2 SEQUENCE

TOP EVENT FIRE-W2 CONTAINS 69 EVENTS IN 114 CUT SETS

THE FREQUENCY OF TOP EVENT FIRE-W2 IS 3.77E-06

DESCRIPTIVE STATISTICS FOR THE FREQUENCY OF TOP EVENT FIRE-W2

N	400
MEAN	6.71E-06
STD DEV	4.58E-05
LOWER 5%	0.00E+00
LOWER 25%	0.00E+00
MEDIAN	0.00E+00
UPPER 25%	2.99E-07
UPPER 5%	1.35E-05

90% UNCERTAINTY INTERVAL FOR TOP EVENT FREQUENCY (INNERMOST BRACKETS DENOTE INTERQUARTILE RANGE, ASTERISK DENOTES MEDIAN, N DENOTES NOMINAL VALUE AND M DENOTES MEAN)

NOMENCLATURE:

PD = PARTIAL DERIVATIVE

TEF = FREQUENCY OF THE TOP EVENT

EV(J) = PROBABILITY OF EVENT J FOR BASE EVENTS
= FREQUENCY OF EVENT J FOR INITIATING EVENTS

MEASURES:

1. FOR BASE EVENTS AND INITIATING EVENTS:

RISK REDUCTION = PD x EV(J)
= TEF - TEF(EVALUATED WITH EV(J) = 0)

2. FOR BASE EVENTS ONLY:

RISK INCREASE = PD - RISK REDUCTION
= PD x (1 - EV(J))
= TEF(EVALUATED WITH EV(J) = 1) - TEF

FIRE-W2 SEQUENCE
RISK REDUCTION BY BASE EVENT (WITH ASSOCIATED UNCERTAINTY INTERVALS)

BASE EVENT	OCCUR	PROB	(RANK)	RISK REDUCTION	(RANK)	LOWER 5%	UPPER 5%
FS2	114	3.00E-01	(6.0)	3.77E-06	(2.5)	0.00E+00	1.35E-05
LAMBDA-SVGR	114	1.40E-02	(12.0)	3.77E-06	(2.5)	0.00E+00	1.35E-05
Q6TG	114	9.80E-01	(4.0)	3.77E-06	(2.5)	0.00E+00	1.35E-05
FA6	114	1.80E-01	(7.0)	3.77E-06	(2.5)	0.00E+00	1.35E-05
SUR-002-L	57	1.60E-01	(8.0)	3.63E-06	(5.0)	0.00E+00	1.16E-05
CONT-LEAK	114	7.50E-01	(5.0)	3.22E-06	(6.0)	0.00E+00	1.16E-05
RHRH01AX-HTX-LFB	2	6.20E-03	(13.0)	5.72E-07	(7.0)	0.00E+00	1.74E-06
SCSF06AA-DENER	8	1.00E+00	(2.0)	3.60E-07	(8.0)		
LCSC002A-P-UUM	2	3.00E-03	(15.5)	2.77E-07	(10.5)	0.00E+00	9.22E-07
RHRC02AA-P-NDUUM	2	3.00E-03	(15.5)	2.77E-07	(10.5)	0.00E+00	5.01E-07
C0DG01P-P-UUM	2	3.00E-03	(15.5)	2.77E-07	(10.5)	0.00E+00	5.01E-07
RHRC02AA-P-UUM	2	3.00E-03	(15.5)	2.77E-07	(10.5)	0.00E+00	9.22E-07
C0DG01P-PMS-CC	2	2.50E-03	(20.5)	2.31E-07	(14.0)	0.00E+00	4.51E-07
RHRB01AA-BOO-CC	2	2.50E-03	(20.5)	2.31E-07	(14.0)	0.00E+00	4.51E-07
NWVY01CA-FMS-CC	2	2.50E-03	(20.5)	2.31E-07	(14.0)	0.00E+00	4.51E-07
SUR-027-R	57	1.80E-02	(11.0)	1.36E-07	(16.0)	0.00E+00	6.35E-07
CSCD300A-PLG-LF	2	1.20E-03	(24.0)	1.11E-07	(17.0)	0.00E+00	2.34E-07
C0DG01P-PMS-LF	2	1.10E-03	(25.5)	1.01E-07	(18.5)	0.00E+00	2.32E-07
RHRC02AA-PMS-LF	2	1.10E-03	(25.5)	1.01E-07	(18.5)	0.00E+00	2.32E-07
NWVY01AX-ACX-LFI	2	8.40E-04	(27.0)	7.75E-08	(20.0)	0.00E+00	1.39E-07
FLOW-RHR-A3	6	1.00E+00	(2.0)	7.60E-08	(21.0)		
EE-CSCD300A-PLG	2	7.20E-04	(28.0)	6.64E-08	(22.0)	0.00E+00	1.88E-07
C0DG01F-PLG-LF	2	5.80E-04	(29.0)	5.35E-08	(23.0)	0.00E+00	1.15E-07
NWVY01CA-FMS-LF	2	5.40E-04	(30.0)	4.98E-08	(24.0)	0.00E+00	1.67E-07
RHRF48AA-VOO-LF	2	5.00E-04	(32.5)	4.61E-08	(26.5)	0.00E+00	1.75E-07
RHRB01AA-BOO-LF	2	5.00E-04	(32.5)	4.61E-08	(26.5)	0.00E+00	2.04E-07
CSCF068A-VCC-LF	2	5.00E-04	(32.5)	4.61E-08	(26.5)	0.00E+00	1.75E-07
NWVY01CA-F-UUM	2	5.00E-04	(32.5)	4.61E-08	(26.5)	0.00E+00	1.91E-07
RHRF87AA-V-UUM	2	3.00E-04	(43.0)	2.77E-08	(37.0)	0.00E+00	8.91E-08
RHRF65AA-N-UUM	2	3.00E-04	(43.0)	2.77E-08	(37.0)	0.00E+00	8.91E-08
RHRF64AA-V-UUM	2	3.00E-04	(43.0)	2.77E-08	(37.0)	0.00E+00	8.91E-08
RHRF88AX-R-UUM	2	3.00E-04	(43.0)	2.77E-08	(37.0)	0.00E+00	8.91E-08
RHRF48AA-V-UUM	2	3.00E-04	(43.0)	2.77E-08	(37.0)	0.00E+00	8.91E-08
RHRF47AA-V-UUM	2	3.00E-04	(43.0)	2.77E-08	(37.0)	0.00E+00	8.91E-08
RHRF55AX-R-UUM	2	3.00E-04	(43.0)	2.77E-08	(37.0)	0.00E+00	8.91E-08
C0DG01F-S-UUM	2	3.00E-04	(43.0)	2.77E-08	(37.0)	0.00E+00	5.74E-08
RHRF60AA-S-UUM	2	3.00E-04	(43.0)	2.77E-08	(37.0)	0.00E+00	8.91E-08
PC02AAAX-AOO-LFO	2	3.00E-04	(43.0)	2.77E-08	(37.0)	0.00E+00	6.75E-08
CSCF008A-V-UUM	2	3.00E-04	(43.0)	2.77E-08	(37.0)	0.00E+00	8.91E-08
CSCD300A-S-UUM	2	3.00E-04	(43.0)	2.77E-08	(37.0)	0.00E+00	5.74E-08

NWVY01AX-A-UUM	2	3.00E-04 (43.0)	2.77E-08 (37.0)	0.00E+00	5.74E-08
SCSF06AA-V-UUM	2	3.00E-04 (43.0)	2.77E-08 (37.0)	0.00E+00	8.91E-08
RHRH01AX-H-UUM	2	3.00E-04 (43.0)	2.77E-08 (37.0)	0.00E+00	5.74E-08
RHRF74AA-V-UUM	2	3.00E-04 (43.0)	2.77E-08 (37.0)	0.00E+00	8.91E-08
RHRF51AA-N-UUM	2	3.00E-04 (43.0)	2.77E-08 (37.0)	0.00E+00	8.91E-08
LPCI-PMS-CM	2	2.50E-03 (20.5)	2.54E-08 (46.5)	0.00E+00	4.69E-08
LPCI-BETA	2	1.10E-01 (9.0)	2.54E-08 (46.5)	0.00E+00	4.69E-08
NOFLOW-RHR-A1	4	1.00E+00 (2.0)	2.03E-08 (48.0)		
LPCI-MOV-BETA	4	3.00E-02 (10.0)	1.38E-08 (49.0)	0.00E+00	1.83E-08
RHRF98AX-XOC-LF	2	1.10E-04 (54.0)	1.01E-08 (52.0)	0.00E+00	3.32E-08
RHRF47AA-VOC-LF	2	1.10E-04 (54.0)	1.01E-08 (52.0)	0.00E+00	3.32E-08
RHRF04AA-VOC-LF	2	1.10E-04 (54.0)	1.01E-08 (52.0)	0.00E+00	3.32E-08
RHRF03AA-VOC-LF	2	1.10E-04 (54.0)	1.01E-08 (52.0)	0.00E+00	3.32E-08
RHR301AX-STR	2	1.10E-04 (54.0)	1.01E-08 (52.0)	0.00E+00	2.84E-08
RHRF31AX-CCC-LF	2	1.00E-04 (57.5)	9.22E-09 (55.5)	0.00E+00	3.54E-08
C0DG002-CCC-LF	2	1.00E-04 (57.5)	9.22E-09 (55.5)	0.00E+00	3.54E-08
CCBF068A-BCO-LF	2	8.40E-05 (60.0)	7.75E-09 (58.0)	0.00E+00	2.20E-08
CCB0DG1P-BCO-LF	2	8.40E-05 (60.0)	7.75E-09 (58.0)	0.00E+00	2.20E-08
1EB16211-BCO	2	8.40E-05 (60.0)	7.75E-09 (58.0)	0.00E+00	2.20E-08
LPCI-MOV-CM2	2	2.50E-03 (20.5)	6.92E-09 (60.5)	0.00E+00	9.16E-09
LPCI-MOV-CM1	2	2.50E-03 (20.5)	6.92E-09 (60.5)	0.00E+00	9.16E-09
1EB35Y2X-BCO-LF	2	7.20E-05 (65.0)	6.64E-09 (65.0)	0.00E+00	2.14E-08
1EB235YA-BCO-LF	2	7.20E-05 (65.0)	6.64E-09 (65.0)	0.00E+00	2.14E-08
1EB211YX-BCO-LF	2	7.20E-05 (65.0)	6.64E-09 (65.0)	0.00E+00	2.14E-08
1EB235XA-BCO-LF	2	7.20E-05 (65.0)	6.64E-09 (65.0)	0.00E+00	2.14E-08
1EB1Y22X-BCO	2	7.20E-05 (65.0)	6.64E-09 (65.0)	0.00E+00	2.14E-08
NWVB001X-BCO-LF	2	7.20E-05 (65.0)	6.64E-09 (65.0)	0.00E+00	2.14E-08
1EB235A-BCO-LF	2	7.20E-05 (65.0)	6.64E-09 (65.0)	0.00E+00	2.14E-08
RHRB03AX-BCO-LF	2	2.40E-05 (69.0)	2.21E-09 (69.0)	0.00E+00	7.26E-09

FIRE-W2 SEQUENCE
RISK INCREASE BY BASE EVENT (WITH ASSOCIATED UNCERTAINTY INTERVALS)

BASE EVENT	OCCUR	PROB	(RANK)	RISK INCREASE	(RANK)	LOWER 5%	UPPER 5%
LAMBDA-SVGR	114	1.40E-02	(12.0)	2.65E-04	(1.0)	0.00E+00	1.71E-03
RHRB03AX-BCO-LF	2	2.40E-05	(69.0)	9.22E-05	(2.0)	0.00E+00	3.75E-04
1EB235XA-BCO-LF	2	7.20E-05	(65.0)	9.22E-05	(6.0)	0.00E+00	3.75E-04
NWVB001X-BCO-LF	2	7.20E-05	(65.0)	9.22E-05	(6.0)	0.00E+00	3.75E-04
1EB1Y22X-BCO	2	7.20E-05	(65.0)	9.22E-05	(6.0)	0.00E+00	3.75E-04
1EB235YA-BCO-LF	2	7.20E-05	(65.0)	9.22E-05	(6.0)	0.00E+00	3.75E-04
1EB35Y2X-BCO-LF	2	7.20E-05	(65.0)	9.22E-05	(6.0)	0.00E+00	3.75E-04
1EB235A-BCO-LF	2	7.20E-05	(65.0)	9.22E-05	(6.0)	0.00E+00	3.75E-04
1EB211YX-BCO-LF	2	7.20E-05	(65.0)	9.22E-05	(6.0)	0.00E+00	3.75E-04
1EB16211-BCO	2	8.40E-05	(60.0)	9.22E-05	(11.0)	0.00E+00	3.75E-04
CCB0DG1P-BCO-LF	2	8.40E-05	(60.0)	9.22E-05	(11.0)	0.00E+00	3.75E-04
CCBF068A-BCO-LF	2	8.40E-05	(60.0)	9.22E-05	(11.0)	0.00E+00	3.75E-04
C0DG002-CCC-LF	2	1.00E-04	(57.5)	9.22E-05	(13.5)	0.00E+00	3.75E-04
RHRF31AX-CCC-LF	2	1.00E-04	(57.5)	9.22E-05	(13.5)	0.00E+00	3.75E-04
RHRF04AA-VOC-LF	2	1.10E-04	(54.0)	9.22E-05	(17.0)	0.00E+00	3.75E-04
RHRF03AA-VOC-LF	2	1.10E-04	(54.0)	9.22E-05	(17.0)	0.00E+00	3.75E-04
RHRF98AX-XOC-LF	2	1.10E-04	(54.0)	9.22E-05	(17.0)	0.00E+00	3.75E-04
RHR301AX-STR	2	1.10E-04	(54.0)	9.22E-05	(17.0)	0.00E+00	3.75E-04
RHRF47AA-VOC-LF	2	1.10E-04	(54.0)	9.22E-05	(17.0)	0.00E+00	3.75E-04
RHRF74AA-V-UUM	2	3.00E-04	(43.0)	9.22E-05	(28.0)	0.00E+00	3.75E-04
RHRF60AA-S-UUM	2	3.00E-04	(43.0)	9.22E-05	(28.0)	0.00E+00	3.75E-04
RHRF55AX-R-UUM	2	3.00E-04	(43.0)	9.22E-05	(28.0)	0.00E+00	3.75E-04
RHRF48AA-V-UUM	2	3.00E-04	(43.0)	9.22E-05	(28.0)	0.00E+00	3.75E-04
RHRF47AA-V-UUM	2	3.00E-04	(43.0)	9.22E-05	(28.0)	0.00E+00	3.75E-04
RHRF65AA-N-UUM	2	3.00E-04	(43.0)	9.22E-05	(28.0)	0.00E+00	3.75E-04
RHRF51AA-N-UUM	2	3.00E-04	(43.0)	9.22E-05	(28.0)	0.00E+00	3.75E-04
NWVY01AX-A-UUM	2	3.00E-04	(43.0)	9.22E-05	(28.0)	0.00E+00	3.75E-04
RHRF64AA-V-UUM	2	3.00E-04	(43.0)	9.22E-05	(28.0)	0.00E+00	3.75E-04
RHRF87AA-V-UUM	2	3.00E-04	(43.0)	9.22E-05	(28.0)	0.00E+00	3.75E-04
RHRF88AX-R-UUM	2	3.00E-04	(43.0)	9.22E-05	(28.0)	0.00E+00	3.75E-04
C0DG01F-S-UUM	2	3.00E-04	(43.0)	9.22E-05	(28.0)	0.00E+00	3.75E-04
CSCF008A-V-UUM	2	3.00E-04	(43.0)	9.22E-05	(28.0)	0.00E+00	3.75E-04
CSCD300A-S-UUM	2	3.00E-04	(43.0)	9.22E-05	(28.0)	0.00E+00	3.75E-04
SCSF06AA-V-UUM	2	3.00E-04	(43.0)	9.22E-05	(28.0)	0.00E+00	3.75E-04
RHRH01AX-H-UUM	2	3.00E-04	(43.0)	9.22E-05	(28.0)	0.00E+00	3.75E-04
PC02AAAX-AOO-LFO	2	3.00E-04	(43.0)	9.22E-05	(28.0)	0.00E+00	3.75E-04
RHRF48AA-VOO-LF	2	5.00E-04	(32.5)	9.22E-05	(38.5)	0.00E+00	3.75E-04
RHRB01AA-BOO-LF	2	5.00E-04	(32.5)	9.22E-05	(38.5)	0.00E+00	3.75E-04
CSCF068A-VCC-LF	2	5.00E-04	(32.5)	9.22E-05	(38.5)	0.00E+00	3.75E-04
NWVY01CA-F-UUM	2	5.00E-04	(32.5)	9.22E-05	(38.5)	0.00E+00	3.75E-04

NWVY01CA-FMS-LF	2	5.40E-04 (30.0)	9.22E-05 (41.0)	0.00E+00	3.75E-04
C0DG01F-PLG-LF	2	5.80E-04 (29.0)	9.22E-05 (42.0)	0.00E+00	3.75E-04
EE-CSCD300A-PLG	2	7.20E-04 (28.0)	9.22E-05 (43.0)	0.00E+00	3.75E-04
NWVY01AX-ACX-LFI	2	8.40E-04 (27.0)	9.22E-05 (44.0)	0.00E+00	3.75E-04
C0DG01P-PMS-LF	2	1.10E-03 (25.5)	9.21E-05 (45.5)	0.00E+00	3.75E-04
RHRC02AA-PMS-LF	2	1.10E-03 (25.5)	9.21E-05 (45.5)	0.00E+00	3.75E-04
CSCD300A-PLG-LF	2	1.20E-03 (24.0)	9.21E-05 (47.0)	0.00E+00	3.75E-04
C0DG01P-PMS-CC	2	2.50E-03 (20.5)	9.20E-05 (49.0)	0.00E+00	3.75E-04
RHRB01AA-BOO-CC	2	2.50E-03 (20.5)	9.20E-05 (49.0)	0.00E+00	3.75E-04
NWVY01CA-FMS-CC	2	2.50E-03 (20.5)	9.20E-05 (49.0)	0.00E+00	3.75E-04
LCSC002A-P-UUM	2	3.00E-03 (15.5)	9.20E-05 (52.5)	0.00E+00	3.73E-04
RHRC02AA-P-UUM	2	3.00E-03 (15.5)	9.20E-05 (52.5)	0.00E+00	3.73E-04
C0DG01P-P-UUM	2	3.00E-03 (15.5)	9.20E-05 (52.5)	0.00E+00	3.74E-04
RHRC02AA-P-NDUUM	2	3.00E-03 (15.5)	9.20E-05 (52.5)	0.00E+00	3.74E-04
RHRH01AX-HTX-LFB	2	6.20E-03 (13.0)	9.17E-05 (55.0)	0.00E+00	3.75E-04
SUR-002-L	57	1.60E-01 (8.0)	1.91E-05 (56.0)	0.00E+00	7.41E-05
FA6	114	1.80E-01 (7.0)	1.72E-05 (57.0)	0.00E+00	5.62E-05
LPCI-PMS-CM	2	2.50E-03 (20.5)	1.01E-05 (58.0)	0.00E+00	3.39E-05
FS2	114	3.00E-01 (6.0)	8.79E-06 (59.0)	0.00E+00	3.71E-05
SUR-027-R	57	1.80E-02 (11.0)	7.43E-06 (60.0)	0.00E+00	1.32E-05
LPCI-MOV-CM2	2	2.50E-03 (20.5)	2.76E-06 (61.5)	0.00E+00	9.12E-06
LPCI-MOV-CM1	2	2.50E-03 (20.5)	2.76E-06 (61.5)	0.00E+00	9.12E-06
CONT-LEAK	114	7.50E-01 (5.0)	1.07E-06 (63.0)	-6.35E-07	0.00E+00
LPCI-MOV-BETA	4	3.00E-02 (10.0)	4.47E-07 (64.0)	0.00E+00	8.84E-07
LPCI-BETA	2	1.10E-01 (9.0)	2.05E-07 (65.0)	0.00E+00	4.14E-07
Q6TG	114	9.80E-01 (4.0)	7.69E-08 (66.0)	0.00E+00	1.93E-07
FLOW-RHR-A3	6	1.00E+00 (2.0)	0.00E+00 (68.0)		
SCSF06AA-DENER	8	1.00E+00 (2.0)	0.00E+00 (68.0)		
NOFLOW-RHR-A1	4	1.00E+00 (2.0)	0.00E+00 (68.0)		

FIRE-W2 SEQUENCE
UNCERTAINTY IMPORTANCE BY BASE EVENT

BASE EVENT	OCCUR	PROB	(RANK)	% REDUCTION IN THE UNCERTAINTY OF LOG RISK	(RANK)	Y.05/TE.05*	Y.95/TE.95*
SUR-002-L	57	1.60E-01	(8.0)	47.8	(1.0)	NA	1.25
SUR-027-R	57	1.80E-02	(11.0)	20.7	(2.0)	NA	0.95
CONT-LEAK	114	7.50E-01	(5.0)	12.8	(3.0)	NA	0.74
LAMBDA-SVGR	114	1.40E-02	(12.0)	3.4	(4.0)	NA	1.79
RHRH01AX-HTX-LFB	2	6.20E-03	(13.0)	2.5	(5.0)	NA	1.01
C0DG01P-P-UUM	2	3.00E-03	(15.5)	2.1	(6.5)	NA	1.22
RHRC02AA-P-NDUUM	2	3.00E-03	(15.5)	2.1	(6.5)	NA	1.22
RHR301AX-STR	2	1.10E-04	(54.0)	2.1	(8.0)	NA	1.00
CSCF068A-VCC-LF	2	5.00E-04	(32.5)	2.0	(9.5)	NA	1.02
RHRF48AA-VOO-LF	2	5.00E-04	(32.5)	2.0	(9.5)	NA	1.02
NWVY01AX-ACX-LFI	2	8.40E-04	(27.0)	1.9	(11.0)	NA	1.01
EE-CSCD300A-PLG	2	7.20E-04	(28.0)	1.9	(12.0)	NA	1.02
RHRF87AA-V-UUM	2	3.00E-04	(43.0)	1.6	(18.5)	NA	0.98
RHRF65AA-N-UUM	2	3.00E-04	(43.0)	1.6	(18.5)	NA	0.98
CSCF008A-V-UUM	2	3.00E-04	(43.0)	1.6	(18.5)	NA	0.98
RHRF48AA-V-UUM	2	3.00E-04	(43.0)	1.6	(18.5)	NA	0.98
RHRF47AA-V-UUM	2	3.00E-04	(43.0)	1.6	(18.5)	NA	0.98
RHRF64AA-V-UUM	2	3.00E-04	(43.0)	1.6	(18.5)	NA	0.98
RHRF55AX-R-UUM	2	3.00E-04	(43.0)	1.6	(18.5)	NA	0.98
RHRF88AX-R-UUM	2	3.00E-04	(43.0)	1.6	(18.5)	NA	0.98
RHRF51AA-N-UUM	2	3.00E-04	(43.0)	1.6	(18.5)	NA	0.98
RHRF60AA-S-UUM	2	3.00E-04	(43.0)	1.6	(18.5)	NA	0.98
RHRF74AA-V-UUM	2	3.00E-04	(43.0)	1.6	(18.5)	NA	0.98
SCSF06AA-V-UUM	2	3.00E-04	(43.0)	1.6	(18.5)	NA	0.98
LPCI-MOV-BETA	4	3.00E-02	(10.0)	1.6	(25.0)	NA	1.00
RHRB03AX-BCO-LF	2	2.40E-05	(69.0)	1.5	(26.0)	NA	1.00
RHRB01AA-BOO-LF	2	5.00E-04	(32.5)	1.4	(27.0)	NA	1.01
Q6TG	114	9.80E-01	(4.0)	1.3	(28.0)	NA	1.00
NWVY01CA-FMS-LF	2	5.40E-04	(30.0)	1.2	(29.0)	NA	1.01
LPCI-BETA	2	1.10E-01	(9.0)	1.1	(30.0)	NA	1.00
RHRF04AA-VOC-LF	2	1.10E-04	(54.0)	1.1	(32.5)	NA	1.01
RHRF47AA-VOC-LF	2	1.10E-04	(54.0)	1.1	(32.5)	NA	1.01
RHRF03AA-VOC-LF	2	1.10E-04	(54.0)	1.1	(32.5)	NA	1.01
RHRF98AX-XOC-LF	2	1.10E-04	(54.0)	1.1	(32.5)	NA	1.01
LPCI-PMS-CM	2	2.50E-03	(20.5)	1.0	(37.5)	NA	1.12
LPCI-MOV-CM2	2	2.50E-03	(20.5)	1.0	(37.5)	NA	1.12
LPCI-MOV-CM1	2	2.50E-03	(20.5)	1.0	(37.5)	NA	1.12
C0DG01P-PMS-CC	2	2.50E-03	(20.5)	1.0	(37.5)	NA	1.12
RHRB01AA-BOO-CC	2	2.50E-03	(20.5)	1.0	(37.5)	NA	1.12
NWVY01CA-FMS-CC	2	2.50E-03	(20.5)	1.0	(37.5)	NA	1.12

FS2	114	3.00E-01 (6.0)	0.9	(41.0)	NA	1.23
CSCD300A-PLG-LF	2	1.20E-03 (24.0)	0.9	(42.0)	NA	1.02
C0DG01F-PLG-LF	2	5.80E-04 (29.0)	0.8	(43.0)	NA	1.01
CCBF068A-BCO-LF	2	8.40E-05 (60.0)	0.7	(45.0)	NA	1.00
CCB0DG1P-BCO-LF	2	8.40E-05 (60.0)	0.7	(45.0)	NA	1.00
1EB16211-BCO	2	8.40E-05 (60.0)	0.7	(45.0)	NA	1.00
FA6	114	1.80E-01 (7.0)	0.6	(47.0)	NA	0.93
LCSC002A-P-UUM	2	3.00E-03 (15.5)	0.4	(48.5)	NA	0.99
RHRC02AA-P-UUM	2	3.00E-03 (15.5)	0.4	(48.5)	NA	0.99
1EB35Y2X-BCO-LF	2	7.20E-05 (65.0)	0.0	(58.0)		
C0DG01P-PMS-LF	2	1.10E-03 (25.5)	0.0	(58.0)		
RHRF31AX-CCC-LF	2	1.00E-04 (57.5)	0.0	(58.0)		
1EB235YA-BCO-LF	2	7.20E-05 (65.0)	0.0	(58.0)		
1EB211YX-BCO-LF	2	7.20E-05 (65.0)	0.0	(58.0)		
RHRC02AA-PMS-LF	2	1.10E-03 (25.5)	0.0	(58.0)		
1EB235XA-BCO-LF	2	7.20E-05 (65.0)	0.0	(58.0)		
C0DG01F-S-UUM	2	3.00E-04 (43.0)	0.0	(58.0)		
PC02AAAX-AOO-LFO	2	3.00E-04 (43.0)	0.0	(58.0)		
NWVY01CA-F-UUM	2	5.00E-04 (32.5)	0.0	(58.0)		
CSCD300A-S-UUM	2	3.00E-04 (43.0)	0.0	(58.0)		
NWVY01AX-A-UUM	2	3.00E-04 (43.0)	0.0	(58.0)		
NWVB001X-BCO-LF	2	7.20E-05 (65.0)	0.0	(58.0)		
C0DG002-CCC-LF	2	1.00E-04 (57.5)	0.0	(58.0)		
RHRH01AX-H-UUM	2	3.00E-04 (43.0)	0.0	(58.0)		
1EB235A-BCO-LF	2	7.20E-05 (65.0)	0.0	(58.0)		
1EB1Y22X-BCO	2	7.20E-05 (65.0)	0.0	(58.0)		
FLOW-RHR-A3	6	1.00E+00 (2.0)				
SCSF06AA-DENER	8	1.00E+00 (2.0)				
NOFLOW-RHR-A1	4	1.00E+00 (2.0)				

FIRE-W2 SEQUENCE

CUT SET NUMBERS, CUT SET ORDERS, CUT SET FREQUENCIES,
CUMULATIVE NORMALIZED CUT SET FREQUENCIES AND CUT SETS
FOR TOP EVENT FIRE-W2 WITH TOP EVENT FREQUENCY 3.77E-06

(THE FIRST COLUMN OF NUMBERS IS THE LINE NUMBERS FOR THE FILE TEMACSETS.DNF)

2	18	7	5.51E-07	0.14634	CONT-LEAK	*	FA6	*	FS2	*	LAMBDA-SVGR	*		
3					Q6TG	*	RHRH01AX-HTX-LFB	*	SUR-002-L	+				
4	24	7	2.67E-07	0.21715	C0DG01P-P-UUM	*	CONT-LEAK	*	FA6	*	FS2	*		
5					LAMBDA-SVGR	*	Q6TG	*	SUR-002-L	+				
6	29	7	2.67E-07	0.28796	CONT-LEAK	*	FA6	*	FS2	*	LAMBDA-SVGR	*		
7					LCSC002A-P-UUM	*	Q6TG	*	SUR-002-L	+				
8	50	8	2.67E-07	0.35878	CONT-LEAK	*	FA6	*	FS2	*	LAMBDA-SVGR	*		
9					Q6TG	*	RHRC02AA-P-UUM	*	SCSF06AA-DENER	*	SUR-002-L	+		
10	32	7	2.67E-07	0.42959	CONT-LEAK	*	FA6	*	FS2	*	LAMBDA-SVGR	*		
11					Q6TG	*	RHRC02AA-P-NDUUM	*	SUR-002-L	+				
12	45	7	2.22E-07	0.48860	C0DG01P-PMS-CC	*	CONT-LEAK	*	FA6	*	FS2	*		
13					LAMBDA-SVGR	*	Q6TG	*	SUR-002-L	+				
14	42	7	2.22E-07	0.54760	CONT-LEAK	*	FA6	*	FS2	*	LAMBDA-SVGR	*		
15					NWVY01CA-FMS-CC	*	Q6TG	*	SUR-002-L	+				
16	49	7	2.22E-07	0.60661	CONT-LEAK	*	FA6	*	FS2	*	LAMBDA-SVGR	*		
17					Q6TG	*	RHRB01AA-BOO-CC	*	SUR-002-L	+				
18	55	7	1.07E-07	0.63494	CONT-LEAK	*	CSCD300A-PLG-LF	*	FA6	*	FS2	*		
19					LAMBDA-SVGR	*	Q6TG	*	SUR-002-L	+				
20	22	7	9.78E-08	0.66090	C0DG01P-PMS-LF	*	CONT-LEAK	*	FA6	*	FS2	*		
21					LAMBDA-SVGR	*	Q6TG	*	SUR-002-L	+				
22	6	7	9.78E-08	0.68687	CONT-LEAK	*	FA6	*	FS2	*	LAMBDA-SVGR	*		
23					Q6TG	*	RHRC02AA-PMS-LF	*	SUR-002-L	+				
24	3	7	7.47E-08	0.70669	CONT-LEAK	*	FA6	*	FS2	*	LAMBDA-SVGR	*		
25					NWVY01AX-ACX-LFI	*	Q6TG	*	SUR-002-L	+				
26	12	7	6.40E-08	0.72369	CONT-LEAK	*	EE-CSCD300A-PLG	*	FA6	*	FS2	*		
27					LAMBDA-SVGR	*	Q6TG	*	SUR-002-L	+				
28	34	7	5.16E-08	0.73738	C0DG01F-PLG-LF	*	CONT-LEAK	*	FA6	*	FS2	*		
29					LAMBDA-SVGR	*	Q6TG	*	SUR-002-L	+				
30	40	7	4.80E-08	0.75012	CONT-LEAK	*	FA6	*	FS2	*	LAMBDA-SVGR	*		
31					NWVY01CA-FMS-LF	*	Q6TG	*	SUR-002-L	+				
32	30	7	4.45E-08	0.76193	CONT-LEAK	*	CSCF068A-VCC-LF	*	FA6	*	FS2	*		
33					LAMBDA-SVGR	*	Q6TG	*	SUR-002-L	+				
34	54	7	4.45E-08	0.77373	CONT-LEAK	*	FA6	*	FS2	*	LAMBDA-SVGR	*		
35					NWVY01CA-F-UUM	*	Q6TG	*	SUR-002-L	+				
36	16	7	4.45E-08	0.78553	CONT-LEAK	*	FA6	*	FS2	*	LAMBDA-SVGR	*		
37					Q6TG	*	RHRB01AA-BOO-LF	*	SUR-002-L	+				
38	43	8	4.45E-08	0.79733	CONT-LEAK	*	FA6	*	FLOW-RHR-A3	*	FS2	*		
39					LAMBDA-SVGR	*	Q6TG	*	RHRF48AA-VOO-LF	*	SUR-002-L	+		

40	15	7	2.67E-08	0.80441	CONT-LEAK	*	FA6	*	FS2	*	LAMBDA-SVGR	*	
41					Q6TG	*	RHRH01AX-H-UUM	*	SUR-002-L	+			
42	13	7	2.67E-08	0.81149	CONT-LEAK	*	FA6	*	FS2	*	LAMBDA-SVGR	*	
43					Q6TG	*	SCSF06AA-V-UUM	*	SUR-002-L	+			
44	31	8	2.67E-08	0.81857	CONT-LEAK	*	FA6	*	FS2	*	LAMBDA-SVGR	*	
45					Q6TG	*	RHRF64AA-V-UUM	*	SCSF06AA-DENER	*	SUR-002-L	+	
46	5	8	2.67E-08	0.82566	CONT-LEAK	*	FA6	*	FS2	*	LAMBDA-SVGR	*	
47					Q6TG	*	RHRF88AX-R-UUM	*	SCSF06AA-DENER	*	SUR-002-L	+	
48	21	7	2.67E-08	0.83274	CONT-LEAK	*	FA6	*	FS2	*	LAMBDA-SVGR	*	
49					NWVY01AX-A-UUM	*	Q6TG	*	SUR-002-L	+			
50	41	7	2.67E-08	0.83982	CONT-LEAK	*	CSCF008A-V-UUM	*	FA6	*	FS2	*	
51					LAMBDA-SVGR	*	Q6TG	*	SUR-002-L	+			
52	9	7	2.67E-08	0.84690	C0DG01F-S-UUM	*	CONT-LEAK	*	FA6	*	FS2	*	
53					LAMBDA-SVGR	*	Q6TG	*	SUR-002-L	+			
54	36	8	2.67E-08	0.85398	CONT-LEAK	*	FA6	*	FLOW-RHR-A3	*	FS2	*	
55					LAMBDA-SVGR	*	Q6TG	*	RHRF48AA-V-UUM	*	SUR-002-L	+	
56	27	7	2.67E-08	0.86106	CONT-LEAK	*	FA6	*	FS2	*	LAMBDA-SVGR	*	
57					Q6TG	*	RHRF74AA-V-UUM	*	SUR-002-L	+			
58	4	7	2.67E-08	0.86814	CONT-LEAK	*	FA6	*	FS2	*	LAMBDA-SVGR	*	
59					PC02AAAX-AOO-LFO	*	Q6TG	*	SUR-002-L	+			
60	33	7	2.67E-08	0.87522	CONT-LEAK	*	CSCD300A-S-UUM	*	FA6	*	FS2	*	
61					LAMBDA-SVGR	*	Q6TG	*	SUR-002-L	+			
62	28	7	2.67E-08	0.88230	CONT-LEAK	*	FA6	*	FS2	*	LAMBDA-SVGR	*	
63					Q6TG	*	RHRF65AA-N-UUM	*	SUR-002-L	+			
64	19	8	2.67E-08	0.88939	CONT-LEAK	*	FA6	*	FS2	*	LAMBDA-SVGR	*	
65					Q6TG	*	RHRF47AA-V-UUM	*	SCSF06AA-DENER	*	SUR-002-L	+	
66	17	7	2.67E-08	0.89647	CONT-LEAK	*	FA6	*	FS2	*	LAMBDA-SVGR	*	
67					Q6TG	*	RHRF55AX-R-UUM	*	SUR-002-L	+			
68	38	7	2.67E-08	0.90355	CONT-LEAK	*	FA6	*	FS2	*	LAMBDA-SVGR	*	
69					Q6TG	*	RHRF51AA-N-UUM	*	SUR-002-L	+			
70	8	7	2.67E-08	0.91063	CONT-LEAK	*	FA6	*	FS2	*	LAMBDA-SVGR	*	
71					Q6TG	*	RHRF60AA-S-UUM	*	SUR-002-L	+			
72	2	7	2.67E-08	0.91771	CONT-LEAK	*	FA6	*	FS2	*	LAMBDA-SVGR	*	
73					Q6TG	*	RHRF87AA-V-UUM	*	SUR-002-L	+			
74	46	8	2.44E-08	0.92420	CONT-LEAK	*	FA6	*	FS2	*	LAMBDA-SVGR	*	
75					LPCI-BETA	*	LPCI-PMS-CM	*	Q6TG	*	SUR-002-L	+	
76	75	7	2.07E-08	0.92969	/CONT-LEAK	*	FA6	*	FS2	*	LAMBDA-SVGR	*	
77					Q6TG	*	RHRH01AX-HTX-LFB	*	SUR-027-R	+			
78	107	8	1.00E-08	0.93234	/CONT-LEAK	*	FA6	*	FS2	*	LAMBDA-SVGR	*	
79					Q6TG	*	RHRC02AA-P-UUM	*	SCSF06AA-DENER	*	SUR-027-R	+	
80	89	7	1.00E-08	0.93500	/CONT-LEAK	*	FA6	*	FS2	*	LAMBDA-SVGR	*	
81					Q6TG	*	RHRC02AA-P-NDUUM	*	SUR-027-R	+			
82	86	7	1.00E-08	0.93766	/CONT-LEAK	*	FA6	*	FS2	*	LAMBDA-SVGR	*	
83					LCSC002A-P-UUM	*	Q6TG	*	SUR-027-R	+			
84	81	7	1.00E-08	0.94031	C0DG01P-P-UUM	*	/CONT-LEAK	*	FA6	*	FS2	*	
85					LAMBDA-SVGR	*	Q6TG	*	SUR-027-R	+			

86	7	7	9.78E-09	0.94291	CONT-LEAK	*	FA6	*	FS2	*	LAMBDA-SVGR	*
87					Q6TG	*	RHRF47AA-VOC-LF	*	SUR-002-L	+		
88	53	7	9.78E-09	0.94550	CONT-LEAK	*	FA6	*	FS2	*	LAMBDA-SVGR	*
89					Q6TG	*	RHRF98AX-XOC-LF	*	SUR-002-L	+		
90	51	8	9.78E-09	0.94810	CONT-LEAK	*	FA6	*	FS2	*	LAMBDA-SVGR	*
91					NOFLOW-RHR-A1	*	Q6TG	*	RHR301AX-STR	*	SUR-002-L	+
92	25	7	9.78E-09	0.95070	CONT-LEAK	*	FA6	*	FS2	*	LAMBDA-SVGR	*
93					Q6TG	*	RHRF03AA-VOC-LF	*	SUR-002-L	+		
94	52	8	9.78E-09	0.95329	CONT-LEAK	*	FA6	*	FS2	*	LAMBDA-SVGR	*
95					NOFLOW-RHR-A1	*	Q6TG	*	RHRF04AA-VOC-LF	*	SUR-002-L	+
96	20	7	8.89E-09	0.95565	C0DG002-CCC-LF	*	CONT-LEAK	*	FA6	*	FS2	*
97					LAMBDA-SVGR	*	Q6TG	*	SUR-002-L	+		
98	26	7	8.89E-09	0.95801	CONT-LEAK	*	FA6	*	FS2	*	LAMBDA-SVGR	*
99					Q6TG	*	RHRF31AX-CCC-LF	*	SUR-002-L	+		
100	106	7	8.33E-09	0.96023	/CONT-LEAK	*	FA6	*	FS2	*	LAMBDA-SVGR	*
101					Q6TG	*	RHRB01AA-BOO-CC	*	SUR-027-R	+		
102	102	7	8.33E-09	0.96244	C0DG01P-PMS-CC	*	/CONT-LEAK	*	FA6	*	FS2	*
103					LAMBDA-SVGR	*	Q6TG	*	SUR-027-R	+		
104	99	7	8.33E-09	0.96465	/CONT-LEAK	*	FA6	*	FS2	*	LAMBDA-SVGR	*
105					NWVY01CA-FMS-CC	*	Q6TG	*	SUR-027-R	+		
106	14	7	7.47E-09	0.96663	CCB0DG1P-BCO-LF	*	CONT-LEAK	*	FA6	*	FS2	*
107					LAMBDA-SVGR	*	Q6TG	*	SUR-002-L	+		
108	11	7	7.47E-09	0.96862	CCBF068A-BCO-LF	*	CONT-LEAK	*	FA6	*	FS2	*
109					LAMBDA-SVGR	*	Q6TG	*	SUR-002-L	+		
110	57	7	7.47E-09	0.97060	1EB16211-BCO	*	CONT-LEAK	*	FA6	*	FS2	*
111					LAMBDA-SVGR	*	Q6TG	*	SUR-002-L	+		
112	48	8	6.67E-09	0.97237	CONT-LEAK	*	FA6	*	FS2	*	LAMBDA-SVGR	*
113					LPCI-MOV-BETA	*	LPCI-MOV-CM2	*	Q6TG	*	SUR-002-L	+
114	47	8	6.67E-09	0.97414	CONT-LEAK	*	FA6	*	FS2	*	LAMBDA-SVGR	*
115					LPCI-MOV-BETA	*	LPCI-MOV-CM1	*	Q6TG	*	SUR-002-L	+
116	1	7	6.40E-09	0.97584	1EB235XA-BCO-LF	*	CONT-LEAK	*	FA6	*	FS2	*
117					LAMBDA-SVGR	*	Q6TG	*	SUR-002-L	+		
118	44	7	6.40E-09	0.97754	CONT-LEAK	*	FA6	*	FS2	*	LAMBDA-SVGR	*
119					NWVB001X-BCO-LF	*	Q6TG	*	SUR-002-L	+		
120	56	7	6.40E-09	0.97924	1EB35Y2X-BCO-LF	*	CONT-LEAK	*	FA6	*	FS2	*
121					LAMBDA-SVGR	*	Q6TG	*	SUR-002-L	+		
122	39	7	6.40E-09	0.98094	1EB235A-BCO-LF	*	CONT-LEAK	*	FA6	*	FS2	*
123					LAMBDA-SVGR	*	Q6TG	*	SUR-002-L	+		
124	37	7	6.40E-09	0.98264	1EB235YA-BCO-LF	*	CONT-LEAK	*	FA6	*	FS2	*
125					LAMBDA-SVGR	*	Q6TG	*	SUR-002-L	+		
126	23	7	6.40E-09	0.98434	1EB1Y22X-BCO	*	CONT-LEAK	*	FA6	*	FS2	*
127					LAMBDA-SVGR	*	Q6TG	*	SUR-002-L	+		
128	35	7	6.40E-09	0.98604	1EB211YX-BCO-LF	*	CONT-LEAK	*	FA6	*	FS2	*
129					LAMBDA-SVGR	*	Q6TG	*	SUR-002-L	+		
130	112	7	4.00E-09	0.98710	/CONT-LEAK	*	CSCD300A-PLG-LF	*	FA6	*	FS2	*
131					LAMBDA-SVGR	*	Q6TG	*	SUR-027-R	+		

132	63	7	3.67E-09	0.98807	/CONT-LEAK	*	FA6	*	FS2	*	LAMBDA-SVGR	*	
133					Q6TG	*	RHRC02AA-PMS-LF	*	SUR-027-R	+			
134	79	7	3.67E-09	0.98905	C0DG01P-PMS-LF	*	/CONT-LEAK	*	FA6	*	FS2	*	
135					LAMBDA-SVGR	*	Q6TG	*	SUR-027-R	+			
136	60	7	2.80E-09	0.98979	/CONT-LEAK	*	FA6	*	FS2	*	LAMBDA-SVGR	*	
137					NWVY01AX-ACX-LFI	*	Q6TG	*	SUR-027-R	+			
138	69	7	2.40E-09	0.99043	/CONT-LEAK	*	EE-CSCD300A-PLG	*	FA6	*	FS2	*	
139					LAMBDA-SVGR	*	Q6TG	*	SUR-027-R	+			
140	10	8	2.13E-09	0.99099	CONT-LEAK	*	FA6	*	FLOW-RHR-A3	*	FS2	*	
141					LAMBDA-SVGR	*	Q6TG	*	RHRB03AX-BCO-LF	*	SUR-002-L	+	
142	91	7	1.93E-09	0.99151	C0DG01F-PLG-LF	*	/CONT-LEAK	*	FA6	*	FS2	*	
143					LAMBDA-SVGR	*	Q6TG	*	SUR-027-R	+			
144	97	7	1.80E-09	0.99198	/CONT-LEAK	*	FA6	*	FS2	*	LAMBDA-SVGR	*	
145					NWVY01CA-FMS-LF	*	Q6TG	*	SUR-027-R	+			
146	100	8	1.67E-09	0.99243	/CONT-LEAK	*	FA6	*	FLOW-RHR-A3	*	FS2	*	
147					LAMBDA-SVGR	*	Q6TG	*	RHRF48AA-VOO-LF	*	SUR-027-R	+	
148	73	7	1.67E-09	0.99287	/CONT-LEAK	*	FA6	*	FS2	*	LAMBDA-SVGR	*	
149					Q6TG	*	RHRB01AA-BOO-LF	*	SUR-027-R	+			
150	111	7	1.67E-09	0.99331	/CONT-LEAK	*	FA6	*	FS2	*	LAMBDA-SVGR	*	
151					NWVY01CA-F-UUM	*	Q6TG	*	SUR-027-R	+			
152	87	7	1.67E-09	0.99375	/CONT-LEAK	*	CSCF068A-VCC-LF	*	FA6	*	FS2	*	
153					LAMBDA-SVGR	*	Q6TG	*	SUR-027-R	+			
154	62	8	1.00E-09	0.99402	/CONT-LEAK	*	FA6	*	FS2	*	LAMBDA-SVGR	*	
155					Q6TG	*	RHRF88AX-R-UUM	*	SCSF06AA-DENER	*	SUR-027-R	+	
156	61	7	1.00E-09	0.99429	/CONT-LEAK	*	FA6	*	FS2	*	LAMBDA-SVGR	*	
157					PC02AAAX-AOO-LFO	*	Q6TG	*	SUR-027-R	+			
158	59	7	1.00E-09	0.99455	/CONT-LEAK	*	FA6	*	FS2	*	LAMBDA-SVGR	*	
159					Q6TG	*	RHRF87AA-V-UUM	*	SUR-027-R	+			
160	98	7	1.00E-09	0.99482	/CONT-LEAK	*	CSCF008A-V-UUM	*	FA6	*	FS2	*	
161					LAMBDA-SVGR	*	Q6TG	*	SUR-027-R	+			
162	95	7	1.00E-09	0.99508	/CONT-LEAK	*	FA6	*	FS2	*	LAMBDA-SVGR	*	
163					Q6TG	*	RHRF51AA-N-UUM	*	SUR-027-R	+			
164	93	8	1.00E-09	0.99535	/CONT-LEAK	*	FA6	*	FLOW-RHR-A3	*	FS2	*	
165					LAMBDA-SVGR	*	Q6TG	*	RHRF48AA-V-UUM	*	SUR-027-R	+	
166	90	7	1.00E-09	0.99561	/CONT-LEAK	*	CSCD300A-S-UUM	*	FA6	*	FS2	*	
167					LAMBDA-SVGR	*	Q6TG	*	SUR-027-R	+			
168	88	8	1.00E-09	0.99588	/CONT-LEAK	*	FA6	*	FS2	*	LAMBDA-SVGR	*	
169					Q6TG	*	RHRF64AA-V-UUM	*	SCSF06AA-DENER	*	SUR-027-R	+	
170	85	7	1.00E-09	0.99614	/CONT-LEAK	*	FA6	*	FS2	*	LAMBDA-SVGR	*	
171					Q6TG	*	RHRF65AA-N-UUM	*	SUR-027-R	+			
172	84	7	1.00E-09	0.99641	/CONT-LEAK	*	FA6	*	FS2	*	LAMBDA-SVGR	*	
173					Q6TG	*	RHRF74AA-V-UUM	*	SUR-027-R	+			
174	78	7	1.00E-09	0.99668	/CONT-LEAK	*	FA6	*	FS2	*	LAMBDA-SVGR	*	
175					NWVY01AX-A-UUM	*	Q6TG	*	SUR-027-R	+			
176	76	8	1.00E-09	0.99694	/CONT-LEAK	*	FA6	*	FS2	*	LAMBDA-SVGR	*	
177					Q6TG	*	RHRF47AA-V-UUM	*	SCSF06AA-DENER	*	SUR-027-R	+	

178	74	7	1.00E-09	0.99721	/CONT-LEAK	*	FA6	*	FS2	*	LAMBDA-SVGR	*	
179					Q6TG	*	RHRF55AX-R-UUM	*	SUR-027-R	+			
180	72	7	1.00E-09	0.99747	/CONT-LEAK	*	FA6	*	FS2	*	LAMBDA-SVGR	*	
181					Q6TG	*	RHRH01AX-H-UUM	*	SUR-027-R	+			
182	70	7	1.00E-09	0.99774	/CONT-LEAK	*	FA6	*	FS2	*	LAMBDA-SVGR	*	
183					Q6TG	*	SCSF06AA-V-UUM	*	SUR-027-R	+			
184	66	7	1.00E-09	0.99800	C0DG01F-S-UUM	*	/CONT-LEAK	*	FA6	*	FS2	*	
185					LAMBDA-SVGR	*	Q6TG	*	SUR-027-R	+			
186	65	7	1.00E-09	0.99827	/CONT-LEAK	*	FA6	*	FS2	*	LAMBDA-SVGR	*	
187					Q6TG	*	RHRF60AA-S-UUM	*	SUR-027-R	+			
188	103	8	9.17E-10	0.99851	/CONT-LEAK	*	FA6	*	FS2	*	LAMBDA-SVGR	*	
189					LPCI-BETA	*	LPCI-PMS-CM	*	Q6TG	*	SUR-027-R	+	
190	110	7	3.67E-10	0.99861	/CONT-LEAK	*	FA6	*	FS2	*	LAMBDA-SVGR	*	
191					Q6TG	*	RHRF98AX-XOC-LF	*	SUR-027-R	+			
192	109	8	3.67E-10	0.99871	/CONT-LEAK	*	FA6	*	FS2	*	LAMBDA-SVGR	*	
193					NOFLOW-RHR-A1	*	Q6TG	*	RHRF04AA-VOC-LF	*	SUR-027-R	+	
194	108	8	3.67E-10	0.99880	/CONT-LEAK	*	FA6	*	FS2	*	LAMBDA-SVGR	*	
195					NOFLOW-RHR-A1	*	Q6TG	*	RHR301AX-STR	*	SUR-027-R	+	
196	82	7	3.67E-10	0.99890	/CONT-LEAK	*	FA6	*	FS2	*	LAMBDA-SVGR	*	
197					Q6TG	*	RHRF03AA-VOC-LF	*	SUR-027-R	+			
198	64	7	3.67E-10	0.99900	/CONT-LEAK	*	FA6	*	FS2	*	LAMBDA-SVGR	*	
199					Q6TG	*	RHRF47AA-VOC-LF	*	SUR-027-R	+			
200	83	7	3.33E-10	0.99909	/CONT-LEAK	*	FA6	*	FS2	*	LAMBDA-SVGR	*	
201					Q6TG	*	RHRF31AX-CCC-LF	*	SUR-027-R	+			
202	77	7	3.33E-10	0.99918	C0DG002-CCC-LF	*	/CONT-LEAK	*	FA6	*	FS2	*	
203					LAMBDA-SVGR	*	Q6TG	*	SUR-027-R	+			
204	114	7	2.80E-10	0.99925	1EB16211-BCO	*	/CONT-LEAK	*	FA6	*	FS2	*	
205					LAMBDA-SVGR	*	Q6TG	*	SUR-027-R	+			
206	71	7	2.80E-10	0.99932	CCB0DG1P-BCO-LF	*	/CONT-LEAK	*	FA6	*	FS2	*	
207					LAMBDA-SVGR	*	Q6TG	*	SUR-027-R	+			
208	68	7	2.80E-10	0.99940	CCBF068A-BCO-LF	*	/CONT-LEAK	*	FA6	*	FS2	*	
209					LAMBDA-SVGR	*	Q6TG	*	SUR-027-R	+			
210	105	8	2.50E-10	0.99947	/CONT-LEAK	*	FA6	*	FS2	*	LAMBDA-SVGR	*	
211					LPCI-MOV-BETA	*	LPCI-MOV-CM2	*	Q6TG	*	SUR-027-R	+	
212	104	8	2.50E-10	0.99953	/CONT-LEAK	*	FA6	*	FS2	*	LAMBDA-SVGR	*	
213					LPCI-MOV-BETA	*	LPCI-MOV-CM1	*	Q6TG	*	SUR-027-R	+	
214	58	7	2.40E-10	0.99960	1EB235XA-BCO-LF	*	/CONT-LEAK	*	FA6	*	FS2	*	
215					LAMBDA-SVGR	*	Q6TG	*	SUR-027-R	+			
216	113	7	2.40E-10	0.99966	1EB35Y2X-BCO-LF	*	/CONT-LEAK	*	FA6	*	FS2	*	
217					LAMBDA-SVGR	*	Q6TG	*	SUR-027-R	+			
218	101	7	2.40E-10	0.99972	/CONT-LEAK	*	FA6	*	FS2	*	LAMBDA-SVGR	*	
219					NWVB001X-BCO-LF	*	Q6TG	*	SUR-027-R	+			
220	96	7	2.40E-10	0.99979	1EB235A-BCO-LF	*	/CONT-LEAK	*	FA6	*	FS2	*	
221					LAMBDA-SVGR	*	Q6TG	*	SUR-027-R	+			
222	94	7	2.40E-10	0.99985	1EB235YA-BCO-LF	*	/CONT-LEAK	*	FA6	*	FS2	*	
223					LAMBDA-SVGR	*	Q6TG	*	SUR-027-R	+			

224	92	7	2.40E-10	0.99991	1EB211YX-BCO-LF	*	/CONT-LEAK	*	FA6	*	FS2	*
225					LAMBDA-SVGR	*	Q6TG	*	SUR-027-R	+		
226	80	7	2.40E-10	0.99998	1EB1Y22X-BCO	*	/CONT-LEAK	*	FA6	*	FS2	*
227					LAMBDA-SVGR	*	Q6TG	*	SUR-027-R	+		
228	67	8	8.00E-11	1.00000	/CONT-LEAK	*	FA6	*	FLOW-RHR-A3	*	FS2	*
229					LAMBDA-SVGR	*	Q6TG	*	RHRB03AX-BCO-LF	*	SUR-027-R	.

TEMAC RUN TIME IN CPU SECONDS 177.56

FIRE-Y1 SEQUENCE

TOP EVENT FIRE-Y1 CONTAINS 71 EVENTS IN 120 CUT SETS

THE FREQUENCY OF TOP EVENT FIRE-Y1 IS 7.01E-07

DESCRIPTIVE STATISTICS FOR THE FREQUENCY OF TOP EVENT FIRE-Y1

N	400
MEAN	1.76E-06
STD DEV	1.78E-05
LOWER 5%	0.00E+00
LOWER 25%	0.00E+00
MEDIAN	0.00E+00
UPPER 25%	6.37E-08
UPPER 5%	1.91E-06

90% UNCERTAINTY INTERVAL FOR TOP EVENT FREQUENCY (INNERMOST BRACKETS DENOTE INTERQUARTILE RANGE, ASTERISK DENOTES MEDIAN, N DENOTES NOMINAL VALUE AND M DENOTES MEAN)

NOMENCLATURE:

PD = PARTIAL DERIVATIVE

TEF = FREQUENCY OF THE TOP EVENT

EV(J) = PROBABILITY OF EVENT J FOR BASE EVENTS
= FREQUENCY OF EVENT J FOR INITIATING EVENTS

MEASURES:

1. FOR BASE EVENTS AND INITIATING EVENTS:

RISK REDUCTION = PD x EV(J)
= TEF - TEF(EVALUATED WITH EV(J) = 0)

2. FOR BASE EVENTS ONLY:

RISK INCREASE = PD - RISK REDUCTION
= PD x (1 - EV(J))
= TEF(EVALUATED WITH EV(J) = 1) - TEF

FIRE-Y1 SEQUENCE
RISK REDUCTION BY BASE EVENT (WITH ASSOCIATED UNCERTAINTY INTERVALS)

BASE EVENT	OCCUR	PROB	(RANK)	RISK REDUCTION	(RANK)	LOWER 5%	UPPER 5%
FR1	120	1.00E-02	(11.0)	7.01E-07	(2.0)	0.00E+00	1.91E-06
LAMBDA-SVGR	120	1.40E-02	(10.0)	7.01E-07	(2.0)	0.00E+00	1.91E-06
Q7TG	120	9.50E-01	(4.0)	7.01E-07	(2.0)	0.00E+00	1.91E-06
SUR-002-L	60	1.60E-01	(6.0)	6.76E-07	(4.0)	0.00E+00	1.76E-06
CONT-LEAK	120	7.50E-01	(5.0)	6.00E-07	(5.0)	0.00E+00	1.76E-06
RHRH01BX-HTX-LFB	2	6.20E-03	(12.0)	1.03E-07	(6.0)	0.00E+00	2.86E-07
SCSF06BB-DENER	8	1.00E+00	(2.0)	6.46E-08	(7.0)		
RHRC02BB-P-UUM	2	3.00E-03	(14.5)	4.97E-08	(9.5)	0.00E+00	1.07E-07
RHRC003B-P-UUM	2	3.00E-03	(14.5)	4.97E-08	(9.5)	0.00E+00	1.07E-07
RHRC02BB-P-NDUUM	2	3.00E-03	(14.5)	4.97E-08	(9.5)	0.00E+00	8.58E-08
C2DG01P-P-UUM	2	3.00E-03	(14.5)	4.97E-08	(9.5)	0.00E+00	8.58E-08
SEVY03CB-FMS-CC	2	2.50E-03	(19.5)	4.14E-08	(13.0)	0.00E+00	7.64E-08
C2DG01P-PMS-CC	2	2.50E-03	(19.5)	4.14E-08	(13.0)	0.00E+00	7.64E-08
RHRB01BB-BOO-CC	2	2.50E-03	(19.5)	4.14E-08	(13.0)	0.00E+00	7.64E-08
SUR-027-R	60	1.80E-02	(9.0)	2.53E-08	(15.0)	0.00E+00	1.23E-07
CSCD300B-PLG-LF	2	1.20E-03	(23.0)	1.99E-08	(16.0)	0.00E+00	4.47E-08
C2DG01P-PMS-LF	2	1.10E-03	(24.5)	1.82E-08	(17.5)	0.00E+00	4.22E-08
RHRC02BB-PMS-LF	2	1.10E-03	(24.5)	1.82E-08	(17.5)	0.00E+00	4.22E-08
SEVY03AX-ACX-LFI	2	8.40E-04	(26.0)	1.39E-08	(19.0)	0.00E+00	2.64E-08
FLOW-RHR-B3	6	1.00E+00	(2.0)	1.36E-08	(20.0)		
EE-CSCD300B-PLG	2	7.20E-04	(27.5)	1.19E-08	(21.5)	0.00E+00	2.94E-08
EE-C2DG01F-PLG	2	7.20E-04	(27.5)	1.19E-08	(21.5)	0.00E+00	2.94E-08
C2DG01F-PLG-LF	2	5.80E-04	(29.0)	9.60E-09	(23.0)	0.00E+00	2.25E-08
SEVY03CB-FMS-LF	2	5.40E-04	(30.0)	8.94E-09	(24.0)	0.00E+00	2.26E-08
RHRF48BB-VOO-LF	2	5.00E-04	(33.0)	8.28E-09	(27.0)	0.00E+00	1.66E-08
SEVY03CB-F-UUM	2	5.00E-04	(33.0)	8.28E-09	(27.0)	0.00E+00	2.41E-08
2DG1PK18-ROO-LFO	2	5.00E-04	(33.0)	8.28E-09	(27.0)	0.00E+00	1.62E-08
RHRB01BB-BOO-LF	2	5.00E-04	(33.0)	8.28E-09	(27.0)	0.00E+00	2.18E-08
CSCF068B-VCC-LF	2	5.00E-04	(33.0)	8.28E-09	(27.0)	0.00E+00	1.66E-08
SCSF06BB-V-UUM	2	3.00E-04	(44.5)	4.97E-09	(38.5)	0.00E+00	1.05E-08
RHRH01BX-H-UUM	2	3.00E-04	(44.5)	4.97E-09	(38.5)	0.00E+00	1.05E-08
SEVY03AX-A-UUM	2	3.00E-04	(44.5)	4.97E-09	(38.5)	0.00E+00	1.05E-08
RHRF74BB-V-UUM	2	3.00E-04	(44.5)	4.97E-09	(38.5)	0.00E+00	1.05E-08
RHRF64BB-V-UUM	2	3.00E-04	(44.5)	4.97E-09	(38.5)	0.00E+00	1.05E-08
RHRF60BB-S-UUM	2	3.00E-04	(44.5)	4.97E-09	(38.5)	0.00E+00	1.05E-08
RHRF55BX-R-UUM	2	3.00E-04	(44.5)	4.97E-09	(38.5)	0.00E+00	1.05E-08
RHRF51BB-N-UUM	2	3.00E-04	(44.5)	4.97E-09	(38.5)	0.00E+00	1.05E-08
RHRF48BB-V-UUM	2	3.00E-04	(44.5)	4.97E-09	(38.5)	0.00E+00	1.05E-08
C2DG01F-S-UUM	2	3.00E-04	(44.5)	4.97E-09	(38.5)	0.00E+00	1.05E-08
RHRF47BB-V-UUM	2	3.00E-04	(44.5)	4.97E-09	(38.5)	0.00E+00	1.05E-08

CSCF068B-V-UUM	2	3.00E-04 (44.5)	4.97E-09 (38.5)	0.00E+00	1.05E-08
RHRF87BB-V-UUM	2	3.00E-04 (44.5)	4.97E-09 (38.5)	0.00E+00	1.05E-08
CSCD300B-S-UUM	2	3.00E-04 (44.5)	4.97E-09 (38.5)	0.00E+00	1.05E-08
2DG01PSC-OOO-LFO	2	3.00E-04 (44.5)	4.97E-09 (38.5)	0.00E+00	1.18E-08
2DG01PK18CA-LFOO	2	3.00E-04 (44.5)	4.97E-09 (38.5)	0.00E+00	1.18E-08
RHRF88BX-R-UUM	2	3.00E-04 (44.5)	4.97E-09 (38.5)	0.00E+00	1.05E-08
RHRF65BB-N-UUM	2	3.00E-04 (44.5)	4.97E-09 (38.5)	0.00E+00	1.05E-08
LPCI-PMS-CM	2	2.50E-03 (19.5)	4.55E-09 (48.5)	0.00E+00	5.30E-09
LPCI-BETA	2	1.10E-01 (7.0)	4.55E-09 (48.5)	0.00E+00	5.30E-09
NOFLOW-RHR-B1	4	1.00E+00 (2.0)	3.64E-09 (50.0)		
LPCI-MOV-BETA	4	3.00E-02 (8.0)	2.48E-09 (51.0)	0.00E+00	3.47E-09
RHRF98BX-XOC-LF	2	1.10E-04 (56.0)	1.82E-09 (54.0)	0.00E+00	5.12E-09
RHRF47BB-VOC-LF	2	1.10E-04 (56.0)	1.82E-09 (54.0)	0.00E+00	5.12E-09
RHRF04BB-VOC-LF	2	1.10E-04 (56.0)	1.82E-09 (54.0)	0.00E+00	5.12E-09
RHRF03BB-VOC-LF	2	1.10E-04 (56.0)	1.82E-09 (54.0)	0.00E+00	5.12E-09
RHR301BX-STR	2	1.10E-04 (56.0)	1.82E-09 (54.0)	0.00E+00	3.58E-09
RHRF31BX-CCC-LF	2	1.00E-04 (59.5)	1.66E-09 (57.5)	0.00E+00	5.78E-09
C2DGF002-CCC-LF	2	1.00E-04 (59.5)	1.66E-09 (57.5)	0.00E+00	5.78E-09
CSCB068X-BCO-LF	2	8.40E-05 (62.0)	1.39E-09 (60.0)	0.00E+00	3.25E-09
CCB2DG1P-BCO-LF	2	8.40E-05 (62.0)	1.39E-09 (60.0)	0.00E+00	3.25E-09
1EB16212-BCO	2	8.40E-05 (62.0)	1.39E-09 (60.0)	0.00E+00	3.25E-09
LPCI-MOV-CM1	2	2.50E-03 (19.5)	1.24E-09 (62.5)	0.00E+00	1.74E-09
LPCI-MOV-CM2	2	2.50E-03 (19.5)	1.24E-09 (62.5)	0.00E+00	1.74E-09
1EB36YB-BCO-LF	2	7.20E-05 (67.0)	1.19E-09 (67.0)	0.00E+00	2.37E-09
1EB36Y1X-BCO-LF	2	7.20E-05 (67.0)	1.19E-09 (67.0)	0.00E+00	2.37E-09
1EB236B-BCO-LF	2	7.20E-05 (67.0)	1.19E-09 (67.0)	0.00E+00	2.37E-09
1EB36XB-BCO-LF	2	7.20E-05 (67.0)	1.19E-09 (67.0)	0.00E+00	2.37E-09
1EB2Y22X-BCO	2	7.20E-05 (67.0)	1.19E-09 (67.0)	0.00E+00	2.37E-09
SEVB001X-BCO-LF	2	7.20E-05 (67.0)	1.19E-09 (67.0)	0.00E+00	2.37E-09
1EB212YX-BCO-LF	2	7.20E-05 (67.0)	1.19E-09 (67.0)	0.00E+00	2.37E-09
RHRB03BX-BCO-LF	2	2.40E-05 (71.0)	3.97E-10 (71.0)	0.00E+00	7.90E-10

FIRE-Y1 SEQUENCE
RISK INCREASE BY BASE EVENT (WITH ASSOCIATED UNCERTAINTY INTERVALS)

BASE EVENT	OCCUR	PROB	(RANK)	RISK INCREASE	(RANK)	LOWER 5%	UPPER 5%
FR1	120	1.00E-02	(11.0)	6.94E-05	(1.0)	0.00E+00	2.34E-04
LAMBDA-SVGR	120	1.40E-02	(10.0)	4.94E-05	(2.0)	0.00E+00	3.86E-04
RHRB03BX-BCO-LF	2	2.40E-05	(71.0)	1.66E-05	(3.0)	0.00E+00	4.78E-05
SEVB001X-BCO-LF	2	7.20E-05	(67.0)	1.66E-05	(7.0)	0.00E+00	4.78E-05
1EB36YB-BCO-LF	2	7.20E-05	(67.0)	1.66E-05	(7.0)	0.00E+00	4.78E-05
1EB212YX-BCO-LF	2	7.20E-05	(67.0)	1.66E-05	(7.0)	0.00E+00	4.78E-05
1EB36Y1X-BCO-LF	2	7.20E-05	(67.0)	1.66E-05	(7.0)	0.00E+00	4.78E-05
1EB2Y22X-BCO	2	7.20E-05	(67.0)	1.66E-05	(7.0)	0.00E+00	4.78E-05
1EB36XB-BCO-LF	2	7.20E-05	(67.0)	1.66E-05	(7.0)	0.00E+00	4.78E-05
1EB236B-BCO-LF	2	7.20E-05	(67.0)	1.66E-05	(7.0)	0.00E+00	4.78E-05
CCB2DG1P-BCO-LF	2	8.40E-05	(62.0)	1.66E-05	(12.0)	0.00E+00	4.78E-05
1EB16212-BCO	2	8.40E-05	(62.0)	1.66E-05	(12.0)	0.00E+00	4.78E-05
CSCB068X-BCO-LF	2	8.40E-05	(62.0)	1.66E-05	(12.0)	0.00E+00	4.78E-05
C2DGF002-CCC-LF	2	1.00E-04	(59.5)	1.66E-05	(17.0)	0.00E+00	4.78E-05
RHRF31BX-CCC-LF	2	1.00E-04	(59.5)	1.66E-05	(17.0)	0.00E+00	4.78E-05
RHRF47BB-VOC-LF	2	1.10E-04	(56.0)	1.66E-05	(17.0)	0.00E+00	4.78E-05
RHRF04BB-VOC-LF	2	1.10E-04	(56.0)	1.66E-05	(17.0)	0.00E+00	4.78E-05
RHRF03BB-VOC-LF	2	1.10E-04	(56.0)	1.66E-05	(17.0)	0.00E+00	4.78E-05
RHRF98BX-XOC-LF	2	1.10E-04	(56.0)	1.66E-05	(17.0)	0.00E+00	4.78E-05
RHR301BX-STR	2	1.10E-04	(56.0)	1.66E-05	(17.0)	0.00E+00	4.78E-05
RHRF87BB-V-UUM	2	3.00E-04	(44.5)	1.66E-05	(29.5)	0.00E+00	4.78E-05
RHRF74BB-V-UUM	2	3.00E-04	(44.5)	1.66E-05	(29.5)	0.00E+00	4.78E-05
RHRF60BB-S-UUM	2	3.00E-04	(44.5)	1.66E-05	(29.5)	0.00E+00	4.78E-05
RHRF55BX-R-UUM	2	3.00E-04	(44.5)	1.66E-05	(29.5)	0.00E+00	4.78E-05
RHRH01BX-H-UUM	2	3.00E-04	(44.5)	1.66E-05	(29.5)	0.00E+00	4.78E-05
RHRF64BB-V-UUM	2	3.00E-04	(44.5)	1.66E-05	(29.5)	0.00E+00	4.78E-05
C2DG01F-S-UUM	2	3.00E-04	(44.5)	1.66E-05	(29.5)	0.00E+00	4.78E-05
2DG01PK18CA-LFOO	2	3.00E-04	(44.5)	1.66E-05	(29.5)	0.00E+00	4.77E-05
RHRF47BB-V-UUM	2	3.00E-04	(44.5)	1.66E-05	(29.5)	0.00E+00	4.78E-05
CSCF068B-V-UUM	2	3.00E-04	(44.5)	1.66E-05	(29.5)	0.00E+00	4.78E-05
CSCD300B-S-UUM	2	3.00E-04	(44.5)	1.66E-05	(29.5)	0.00E+00	4.78E-05
RHRF88BX-R-UUM	2	3.00E-04	(44.5)	1.66E-05	(29.5)	0.00E+00	4.78E-05
RHRF48BB-V-UUM	2	3.00E-04	(44.5)	1.66E-05	(29.5)	0.00E+00	4.78E-05
2DG01PSC-OOO-LFO	2	3.00E-04	(44.5)	1.66E-05	(29.5)	0.00E+00	4.77E-05
RHRF51BB-N-UUM	2	3.00E-04	(44.5)	1.66E-05	(29.5)	0.00E+00	4.78E-05
SCSF06BB-V-UUM	2	3.00E-04	(44.5)	1.66E-05	(29.5)	0.00E+00	4.78E-05
SEVY03AX-A-UUM	2	3.00E-04	(44.5)	1.66E-05	(29.5)	0.00E+00	4.78E-05
RHRF65BB-N-UUM	2	3.00E-04	(44.5)	1.66E-05	(29.5)	0.00E+00	4.78E-05
SEVY03CB-F-UUM	2	5.00E-04	(33.0)	1.66E-05	(41.0)	0.00E+00	4.77E-05
RHRF48BB-VOO-LF	2	5.00E-04	(33.0)	1.66E-05	(41.0)	0.00E+00	4.77E-05

CSCF068B-VCC-LF	2	5.00E-04	(33.0)	1.66E-05	(41.0)	0.00E+00	4.77E-05
2DG1PK18-ROO-LFO	2	5.00E-04	(33.0)	1.66E-05	(41.0)	0.00E+00	4.77E-05
RHRB01BB-BOO-LF	2	5.00E-04	(33.0)	1.66E-05	(41.0)	0.00E+00	4.78E-05
SEVY03CB-FMS-LF	2	5.40E-04	(30.0)	1.65E-05	(44.0)	0.00E+00	4.77E-05
C2DG01F-PLG-LF	2	5.80E-04	(29.0)	1.65E-05	(45.0)	0.00E+00	4.77E-05
EE-CSCD300B-PLG	2	7.20E-04	(27.5)	1.65E-05	(46.5)	0.00E+00	4.77E-05
EE-C2DG01F-PLG	2	7.20E-04	(27.5)	1.65E-05	(46.5)	0.00E+00	4.77E-05
SEVY03AX-ACX-LFI	2	8.40E-04	(26.0)	1.65E-05	(48.0)	0.00E+00	4.78E-05
C2DG01P-PMS-LF	2	1.10E-03	(24.5)	1.65E-05	(49.5)	0.00E+00	4.77E-05
RHRC02BB-PMS-LF	2	1.10E-03	(24.5)	1.65E-05	(49.5)	0.00E+00	4.77E-05
CSCD300B-PLG-LF	2	1.20E-03	(23.0)	1.65E-05	(51.0)	0.00E+00	4.76E-05
C2DG01P-PMS-CC	2	2.50E-03	(19.5)	1.65E-05	(53.0)	0.00E+00	4.77E-05
RHRB01BB-BOO-CC	2	2.50E-03	(19.5)	1.65E-05	(53.0)	0.00E+00	4.77E-05
SEVY03CB-FMS-CC	2	2.50E-03	(19.5)	1.65E-05	(53.0)	0.00E+00	4.77E-05
C2DG01P-P-UUM	2	3.00E-03	(14.5)	1.65E-05	(56.5)	0.00E+00	4.77E-05
RHRC02BB-P-UUM	2	3.00E-03	(14.5)	1.65E-05	(56.5)	0.00E+00	4.77E-05
RHRC02BB-P-NDUUM	2	3.00E-03	(14.5)	1.65E-05	(56.5)	0.00E+00	4.77E-05
RHRC003B-P-UUM	2	3.00E-03	(14.5)	1.65E-05	(56.5)	0.00E+00	4.77E-05
RHRH01BX-HTX-LFB	2	6.20E-03	(12.0)	1.65E-05	(59.0)	0.00E+00	4.71E-05
SUR-002-L	60	1.60E-01	(6.0)	3.55E-06	(60.0)	0.00E+00	1.48E-05
LPCI-PMS-CM	2	2.50E-03	(19.5)	1.82E-06	(61.0)	0.00E+00	4.98E-06
SUR-027-R	60	1.80E-02	(9.0)	1.38E-06	(62.0)	0.00E+00	2.01E-06
LPCI-MOV-CM1	2	2.50E-03	(19.5)	4.96E-07	(63.5)	0.00E+00	1.62E-06
LPCI-MOV-CM2	2	2.50E-03	(19.5)	4.96E-07	(63.5)	0.00E+00	1.62E-06
CONT-LEAK	120	7.50E-01	(5.0)	2.00E-07	(65.0)	-1.23E-07	0.00E+00
LPCI-MOV-BETA	4	3.00E-02	(8.0)	8.03E-08	(66.0)	0.00E+00	1.49E-07
Q7TG	120	9.50E-01	(4.0)	3.69E-08	(67.0)	0.00E+00	8.94E-08
LPCI-BETA	2	1.10E-01	(7.0)	3.68E-08	(68.0)	0.00E+00	7.30E-08
SCSF06BB-DENER	8	1.00E+00	(2.0)	0.00E+00	(70.0)		
FLOW-RHR-B3	6	1.00E+00	(2.0)	0.00E+00	(70.0)		
NOFLOW-RHR-B1	4	1.00E+00	(2.0)	0.00E+00	(70.0)		

FIRE-Y1 SEQUENCE
UNCERTAINTY IMPORTANCE BY BASE EVENT

BASE EVENT	OCCUR	PROB	(RANK)	% REDUCTION IN THE UNCERTAINTY OF LOG RISK	(RANK)	Y.05/TE.05*	Y.95/TE.95*
SUR-002-L	60	1.60E-01	(6.0)	46.7	(1.0)	NA	1.47
SUR-027-R	60	1.80E-02	(9.0)	17.4	(2.0)	NA	1.00
CONT-LEAK	120	7.50E-01	(5.0)	10.0	(3.0)	NA	0.75
LAMBDA-SVGR	120	1.40E-02	(10.0)	5.2	(4.0)	NA	2.86
RHRH01BX-HTX-LFB	2	6.20E-03	(12.0)	3.1	(5.0)	NA	0.98
FR1	120	1.00E-02	(11.0)	2.6	(6.0)	NA	1.24
RHR301BX-STR	2	1.10E-04	(56.0)	2.2	(7.0)	NA	1.00
RHRC02BB-P-NDUUM	2	3.00E-03	(14.5)	2.1	(8.5)	NA	1.07
C2DG01P-P-UUM	2	3.00E-03	(14.5)	2.1	(8.5)	NA	1.07
RHRF48BB-VOO-LF	2	5.00E-04	(33.0)	1.7	(10.5)	NA	1.03
CSCF068B-VCC-LF	2	5.00E-04	(33.0)	1.7	(10.5)	NA	1.03
RHRB01BB-BOO-LF	2	5.00E-04	(33.0)	1.7	(12.0)	NA	1.00
EE-C2DG01F-PLG	2	7.20E-04	(27.5)	1.6	(13.5)	NA	0.97
EE-CSCD300B-PLG	2	7.20E-04	(27.5)	1.6	(13.5)	NA	0.97
SEVY03AX-ACX-LFI	2	8.40E-04	(26.0)	1.6	(15.0)	NA	1.02
RHRF74BB-V-UUM	2	3.00E-04	(44.5)	1.5	(21.5)	NA	1.05
SCSF06BB-V-UUM	2	3.00E-04	(44.5)	1.5	(21.5)	NA	1.05
RHRF55BX-R-UUM	2	3.00E-04	(44.5)	1.5	(21.5)	NA	1.05
RHRF51BB-N-UUM	2	3.00E-04	(44.5)	1.5	(21.5)	NA	1.05
RHRF48BB-V-UUM	2	3.00E-04	(44.5)	1.5	(21.5)	NA	1.05
RHRF47BB-V-UUM	2	3.00E-04	(44.5)	1.5	(21.5)	NA	1.05
CSCF068B-V-UUM	2	3.00E-04	(44.5)	1.5	(21.5)	NA	1.05
RHRF87BB-V-UUM	2	3.00E-04	(44.5)	1.5	(21.5)	NA	1.05
RHRF88BX-R-UUM	2	3.00E-04	(44.5)	1.5	(21.5)	NA	1.05
RHRF60BB-S-UUM	2	3.00E-04	(44.5)	1.5	(21.5)	NA	1.05
RHRF64BB-V-UUM	2	3.00E-04	(44.5)	1.5	(21.5)	NA	1.05
RHRF65BB-N-UUM	2	3.00E-04	(44.5)	1.5	(21.5)	NA	1.05
SEVY03CB-FMS-LF	2	5.40E-04	(30.0)	1.4	(28.0)	NA	1.01
LPCI-MOV-BETA	4	3.00E-02	(8.0)	1.4	(29.0)	NA	1.00
RHRB03BX-BCO-LF	2	2.40E-05	(71.0)	1.3	(30.0)	NA	1.00
LPCI-BETA	2	1.10E-01	(7.0)	1.2	(31.0)	NA	1.00
RHRF98BX-XOC-LF	2	1.10E-04	(56.0)	1.0	(33.5)	NA	0.99
RHRF47BB-VOC-LF	2	1.10E-04	(56.0)	1.0	(33.5)	NA	0.99
RHRF04BB-VOC-LF	2	1.10E-04	(56.0)	1.0	(33.5)	NA	0.99
RHRF03BB-VOC-LF	2	1.10E-04	(56.0)	1.0	(33.5)	NA	0.99
CSCD300B-PLG-LF	2	1.20E-03	(23.0)	0.9	(36.0)	NA	0.98
C2DG01F-PLG-LF	2	5.80E-04	(29.0)	0.8	(37.0)	NA	0.99
RHRC02BB-P-UUM	2	3.00E-03	(14.5)	0.5	(38.5)	NA	1.13
RHRC003B-P-UUM	2	3.00E-03	(14.5)	0.5	(38.5)	NA	1.13
RHRH01BX-H-UUM	2	3.00E-04	(44.5)	0.3	(41.5)	NA	1.01

C2DG01F-S-UUM	2	3.00E-04	(44.5)	0.3	(41.5)	NA	1.01
CSCD300B-S-UUM	2	3.00E-04	(44.5)	0.3	(41.5)	NA	1.01
SEVY03AX-A-UUM	2	3.00E-04	(44.5)	0.3	(41.5)	NA	1.01
C2DG01P-PMS-LF	2	1.10E-03	(24.5)	0.0	(56.0)		
1EB36YB-BCO-LF	2	7.20E-05	(67.0)	0.0	(56.0)		
C2DG01P-PMS-CC	2	2.50E-03	(19.5)	0.0	(56.0)		
1EB36Y1X-BCO-LF	2	7.20E-05	(67.0)	0.0	(56.0)		
1EB236B-BCO-LF	2	7.20E-05	(67.0)	0.0	(56.0)		
RHRF31BX-CCC-LF	2	1.00E-04	(59.5)	0.0	(56.0)		
RHRC02BB-PMS-LF	2	1.10E-03	(24.5)	0.0	(56.0)		
2DG1PK18-ROO-LFO	2	5.00E-04	(33.0)	0.0	(56.0)		
1EB36XB-BCO-LF	2	7.20E-05	(67.0)	0.0	(56.0)		
CSCB068X-BCO-LF	2	8.40E-05	(62.0)	0.0	(56.0)		
RHRB01BB-BOO-CC	2	2.50E-03	(19.5)	0.0	(56.0)		
2DG01PSC-OOO-LFO	2	3.00E-04	(44.5)	0.0	(56.0)		
Q7TG	120	9.50E-01	(4.0)	0.0	(56.0)		
CCB2DG1P-BCO-LF	2	8.40E-05	(62.0)	0.0	(56.0)		
2DG01PK18CA-LFOO	2	3.00E-04	(44.5)	0.0	(56.0)		
LPCI-PMS-CM	2	2.50E-03	(19.5)	0.0	(56.0)		
SEVB001X-BCO-LF	2	7.20E-05	(67.0)	0.0	(56.0)		
LPCI-MOV-CM1	2	2.50E-03	(19.5)	0.0	(56.0)		
LPCI-MOV-CM2	2	2.50E-03	(19.5)	0.0	(56.0)		
C2DGF002-CCC-LF	2	1.00E-04	(59.5)	0.0	(56.0)		
1EB2Y22X-BCO	2	7.20E-05	(67.0)	0.0	(56.0)		
1EB212YX-BCO-LF	2	7.20E-05	(67.0)	0.0	(56.0)		
SEVY03CB-F-UUM	2	5.00E-04	(33.0)	0.0	(56.0)		
SEVY03CB-FMS-CC	2	2.50E-03	(19.5)	0.0	(56.0)		
1EB16212-BCO	2	8.40E-05	(62.0)	0.0	(56.0)		
SCSF06BB-DENER	8	1.00E+00	(2.0)				
FLOW-RHR-B3	6	1.00E+00	(2.0)				
NOFLOW-RHR-B1	4	1.00E+00	(2.0)				

FIRE-Y1 SEQUENCE

CUT SET NUMBERS, CUT SET ORDERS, CUT SET FREQUENCIES,
CUMULATIVE NORMALIZED CUT SET FREQUENCIES AND CUT SETS
FOR TOP EVENT FIRE-Y1 WITH TOP EVENT FREQUENCY 7.01E-07

(THE FIRST COLUMN OF NUMBERS IS THE LINE NUMBERS FOR THE FILE TEMACSETS.DNF)

2	44	6	9.90E-08	0.14109	CONT-LEAK	*	FR1	*	LAMBDA-SVGR	*	Q7TG	*
3					RHRH01BX-HTX-LFB	*	SUR-002-L	+				
4	6	6	4.79E-08	0.20936	C2DG01P-P-UUM	*	CONT-LEAK	*	FR1	*	LAMBDA-SVGR	*
5					Q7TG	*	SUR-002-L	+				
6	13	6	4.79E-08	0.27763	CONT-LEAK	*	FR1	*	LAMBDA-SVGR	*	Q7TG	*
7					RHRC003B-P-UUM	*	SUR-002-L	+				
8	37	6	4.79E-08	0.34590	CONT-LEAK	*	FR1	*	LAMBDA-SVGR	*	Q7TG	*
9					RHRC02BB-P-NDUUM	*	SUR-002-L	+				
10	14	7	4.79E-08	0.41417	CONT-LEAK	*	FR1	*	LAMBDA-SVGR	*	Q7TG	*
11					RHRC02BB-P-UUM	*	SCSF06BB-DENER	*	SUR-002-L	+		
12	50	6	3.99E-08	0.47106	C2DG01P-PMS-CC	*	CONT-LEAK	*	FR1	*	LAMBDA-SVGR	*
13					Q7TG	*	SUR-002-L	+				
14	42	6	3.99E-08	0.52795	CONT-LEAK	*	FR1	*	LAMBDA-SVGR	*	Q7TG	*
15					RHRB01BB-BOO-CC	*	SUR-002-L	+				
16	1	6	3.99E-08	0.58484	CONT-LEAK	*	FR1	*	LAMBDA-SVGR	*	Q7TG	*
17					SEVY03CB-FMS-CC	*	SUR-002-L	+				
18	59	6	1.92E-08	0.61215	CONT-LEAK	*	CSCD300B-PLG-LF	*	FR1	*	LAMBDA-SVGR	*
19					Q7TG	*	SUR-002-L	+				
20	53	6	1.76E-08	0.63718	C2DG01P-PMS-LF	*	CONT-LEAK	*	FR1	*	LAMBDA-SVGR	*
21					Q7TG	*	SUR-002-L	+				
22	18	6	1.76E-08	0.66222	CONT-LEAK	*	FR1	*	LAMBDA-SVGR	*	Q7TG	*
23					RHRC02BB-PMS-LF	*	SUR-002-L	+				
24	28	6	1.34E-08	0.68133	CONT-LEAK	*	FR1	*	LAMBDA-SVGR	*	Q7TG	*
25					SEVY03AX-ACX-LFI	*	SUR-002-L	+				
26	38	6	1.15E-08	0.69772	CONT-LEAK	*	EE-CSCD300B-PLG	*	FR1	*	LAMBDA-SVGR	*
27					Q7TG	*	SUR-002-L	+				
28	32	6	1.15E-08	0.71410	CONT-LEAK	*	EE-C2DG01F-PLG	*	FR1	*	LAMBDA-SVGR	*
29					Q7TG	*	SUR-002-L	+				
30	8	6	9.26E-09	0.72730	C2DG01F-PLG-LF	*	CONT-LEAK	*	FR1	*	LAMBDA-SVGR	*
31					Q7TG	*	SUR-002-L	+				
32	49	6	8.62E-09	0.73959	CONT-LEAK	*	FR1	*	LAMBDA-SVGR	*	Q7TG	*
33					SEVY03CB-FMS-LF	*	SUR-002-L	+				
34	10	6	7.98E-09	0.75097	CONT-LEAK	*	FR1	*	LAMBDA-SVGR	*	Q7TG	*
35					RHRB01BB-BOO-LF	*	SUR-002-L	+				
36	9	7	7.98E-09	0.76235	CONT-LEAK	*	FLOW-RHR-B3	*	FR1	*	LAMBDA-SVGR	*
37					Q7TG	*	RHRF48BB-VOO-LF	*	SUR-002-L	+		
38	3	6	7.98E-09	0.77372	2DG1FK18-ROO-LFO	*	CONT-LEAK	*	FR1	*	LAMBDA-SVGR	*
39					Q7TG	*	SUR-002-L	+				

40	27	6	7.98E-09	0.78510	CONT-LEAK	*	FR1	*	LAMBDA-SVGR	*	Q7TG	*
41					SEVY03CB-F-UUM	*	SUR-002-L	+				
42	39	6	7.98E-09	0.79648	CONT-LEAK	*	CSCF068B-VCC-LF	*	FR1	*	LAMBDA-SVGR	*
43					Q7TG	*	SUR-002-L	+				
44	17	6	4.79E-09	0.80331	CONT-LEAK	*	CSCF068B-V-UUM	*	FR1	*	LAMBDA-SVGR	*
45					Q7TG	*	SUR-002-L	+				
46	7	6	4.79E-09	0.81013	CONT-LEAK	*	FR1	*	LAMBDA-SVGR	*	Q7TG	*
47					RHRH01BX-H-UUM	*	SUR-002-L	+				
48	34	6	4.79E-09	0.81696	C2DG01F-S-UUM	*	CONT-LEAK	*	FR1	*	LAMBDA-SVGR	*
49					Q7TG	*	SUR-002-L	+				
50	52	6	4.79E-09	0.82379	2DG01PSC-OOO-LFO	*	CONT-LEAK	*	FR1	*	LAMBDA-SVGR	*
51					Q7TG	*	SUR-002-L	+				
52	15	6	4.79E-09	0.83062	CONT-LEAK	*	FR1	*	LAMBDA-SVGR	*	Q7TG	*
53					SCSF06BB-V-UUM	*	SUR-002-L	+				
54	25	7	4.79E-09	0.83744	CONT-LEAK	*	FR1	*	LAMBDA-SVGR	*	Q7TG	*
55					RHRF47BB-V-UUM	*	SCSF06BB-DENER	*	SUR-002-L	+		
56	30	7	4.79E-09	0.84427	CONT-LEAK	*	FLOW-RHR-B3	*	FR1	*	LAMBDA-SVGR	*
57					Q7TG	*	RHRF48BB-V-UUM	*	SUR-002-L	+		
58	21	6	4.79E-09	0.85110	CONT-LEAK	*	FR1	*	LAMBDA-SVGR	*	Q7TG	*
59					RHRF87BB-V-UUM	*	SUR-002-L	+				
60	22	6	4.79E-09	0.85792	CONT-LEAK	*	FR1	*	LAMBDA-SVGR	*	Q7TG	*
61					RHRF55BX-R-UUM	*	SUR-002-L	+				
62	40	7	4.79E-09	0.86475	CONT-LEAK	*	FR1	*	LAMBDA-SVGR	*	Q7TG	*
63					RHRF64BB-V-UUM	*	SCSF06BB-DENER	*	SUR-002-L	+		
64	29	6	4.79E-09	0.87158	CONT-LEAK	*	CSCD300B-S-UUM	*	FR1	*	LAMBDA-SVGR	*
65					Q7TG	*	SUR-002-L	+				
66	36	6	4.79E-09	0.87840	CONT-LEAK	*	FR1	*	LAMBDA-SVGR	*	Q7TG	*
67					RHRF60BB-S-UUM	*	SUR-002-L	+				
68	43	6	4.79E-09	0.88523	CONT-LEAK	*	FR1	*	LAMBDA-SVGR	*	Q7TG	*
69					RHRF51BB-N-UUM	*	SUR-002-L	+				
70	23	6	4.79E-09	0.89206	CONT-LEAK	*	FR1	*	LAMBDA-SVGR	*	Q7TG	*
71					SEVY03AX-A-UUM	*	SUR-002-L	+				
72	41	6	4.79E-09	0.89889	2DG01PK18CA-LFOO	*	CONT-LEAK	*	FR1	*	LAMBDA-SVGR	*
73					Q7TG	*	SUR-002-L	+				
74	33	6	4.79E-09	0.90571	CONT-LEAK	*	FR1	*	LAMBDA-SVGR	*	Q7TG	*
75					RHRF74BB-V-UUM	*	SUR-002-L	+				
76	16	6	4.79E-09	0.91254	CONT-LEAK	*	FR1	*	LAMBDA-SVGR	*	Q7TG	*
77					RHRF65BB-N-UUM	*	SUR-002-L	+				
78	26	7	4.79E-09	0.91937	CONT-LEAK	*	FR1	*	LAMBDA-SVGR	*	Q7TG	*
79					RHRF88BX-R-UUM	*	SCSF06BB-DENER	*	SUR-002-L	+		
80	56	7	4.39E-09	0.92562	CONT-LEAK	*	FR1	*	LAMBDA-SVGR	*	LPCI-BETA	*
81					LPCI-PMS-CM	*	Q7TG	*	SUR-002-L	+		
82	104	6	3.71E-09	0.93092	/CONT-LEAK	*	FR1	*	LAMBDA-SVGR	*	Q7TG	*
83					RHRH01BX-HTX-LFB	*	SUR-027-R	+				
84	97	6	1.80E-09	0.93348	/CONT-LEAK	*	FR1	*	LAMBDA-SVGR	*	Q7TG	*
85					RHRC02BB-P-NDUUM	*	SUR-027-R	+				

86	74	7	1.80E-09	0.93604	/CONT-LEAK	*	FR1	*	LAMBDA-SVGR	*	Q7TG	*	
87					RHRC02BB-P-UUM	*	SCSF06BB-DENER	*	SUR-027-R	+			
88	73	6	1.80E-09	0.93860	/CONT-LEAK	*	FR1	*	LAMBDA-SVGR	*	Q7TG	*	
89					RHRC003B-P-UUM	*	SUR-027-R	+					
90	66	6	1.80E-09	0.94116	C2DG01P-P-UUM	*	/CONT-LEAK	*	FR1	*	LAMBDA-SVGR	*	
91					Q7TG	*	SUR-027-R	+					
92	12	6	1.76E-09	0.94366	CONT-LEAK	*	FR1	*	LAMBDA-SVGR	*	Q7TG	*	
93					RHRF47BB-VOC-LF	*	SUR-002-L	+					
94	45	7	1.76E-09	0.94616	CONT-LEAK	*	FR1	*	LAMBDA-SVGR	*	NOFLOW-RHR-B1	*	
95					Q7TG	*	RHR301BX-STR	*	SUR-002-L	+			
96	11	6	1.76E-09	0.94867	CONT-LEAK	*	FR1	*	LAMBDA-SVGR	*	Q7TG	*	
97					RHRF98BX-XOC-LF	*	SUR-002-L	+					
98	46	6	1.76E-09	0.95117	CONT-LEAK	*	FR1	*	LAMBDA-SVGR	*	Q7TG	*	
99					RHRF03BB-VOC-LF	*	SUR-002-L	+					
100	51	7	1.76E-09	0.95367	CONT-LEAK	*	FR1	*	LAMBDA-SVGR	*	NOFLOW-RHR-B1	*	
101					Q7TG	*	RHRF04BB-VOC-LF	*	SUR-002-L	+			
102	54	6	1.60E-09	0.95595	CONT-LEAK	*	FR1	*	LAMBDA-SVGR	*	Q7TG	*	
103					RHRF31BX-CCC-LF	*	SUR-002-L	+					
104	47	6	1.60E-09	0.95822	C2DGF002-CCC-LF	*	CONT-LEAK	*	FR1	*	LAMBDA-SVGR	*	
105					Q7TG	*	SUR-002-L	+					
106	61	6	1.50E-09	0.96036	/CONT-LEAK	*	FR1	*	LAMBDA-SVGR	*	Q7TG	*	
107					SEVY03CB-FMS-CC	*	SUR-027-R	+					
108	102	6	1.50E-09	0.96249	/CONT-LEAK	*	FR1	*	LAMBDA-SVGR	*	Q7TG	*	
109					RHRB01BB-BOO-CC	*	SUR-027-R	+					
110	110	6	1.50E-09	0.96462	C2DG01P-PMS-CC	*	/CONT-LEAK	*	FR1	*	LAMBDA-SVGR	*	
111					Q7TG	*	SUR-027-R	+					
112	55	6	1.34E-09	0.96654	CONT-LEAK	*	CSCB068X-BCO-LF	*	FR1	*	LAMBDA-SVGR	*	
113					Q7TG	*	SUR-002-L	+					
114	19	6	1.34E-09	0.96845	1EB16212-BCO	*	CONT-LEAK	*	FR1	*	LAMBDA-SVGR	*	
115					Q7TG	*	SUR-002-L	+					
116	4	6	1.34E-09	0.97036	CCB2DG1P-BCO-LF	*	CONT-LEAK	*	FR1	*	LAMBDA-SVGR	*	
117					Q7TG	*	SUR-002-L	+					
118	58	7	1.20E-09	0.97206	CONT-LEAK	*	FR1	*	LAMBDA-SVGR	*	LPCI-MOV-BETA	*	
119					LPCI-MOV-CM2	*	Q7TG	*	SUR-002-L	+			
120	57	7	1.20E-09	0.97377	CONT-LEAK	*	FR1	*	LAMBDA-SVGR	*	LPCI-MOV-BETA	*	
121					LPCI-MOV-CM1	*	Q7TG	*	SUR-002-L	+			
122	31	6	1.15E-09	0.97541	1EB236B-BCO-LF	*	CONT-LEAK	*	FR1	*	LAMBDA-SVGR	*	
123					Q7TG	*	SUR-002-L	+					
124	60	6	1.15E-09	0.97705	1EB212YX-BCO-LF	*	CONT-LEAK	*	FR1	*	LAMBDA-SVGR	*	
125					Q7TG	*	SUR-002-L	+					
126	48	6	1.15E-09	0.97869	1EB36YB-BCO-LF	*	CONT-LEAK	*	FR1	*	LAMBDA-SVGR	*	
127					Q7TG	*	SUR-002-L	+					
128	2	6	1.15E-09	0.98033	1EB2Y22X-BCO	*	CONT-LEAK	*	FR1	*	LAMBDA-SVGR	*	
129					Q7TG	*	SUR-002-L	+					
130	20	6	1.15E-09	0.98196	1EB36Y1X-BCO-LF	*	CONT-LEAK	*	FR1	*	LAMBDA-SVGR	*	
131					Q7TG	*	SUR-002-L	+					

132	35	6	1.15E-09	0.98360	1EB36XB-BCO-LF	*	CONT-LEAK	*	FR1	*	LAMBDA-SVGR	*	
133					Q7TG	*	SUR-002-L	+					
134	5	6	1.15E-09	0.98524	CONT-LEAK	*	FR1	*	LAMBDA-SVGR	*	Q7TG	*	
135					SEVB001X-BCO-LF	*	SUR-002-L	+					
136	119	6	7.18E-10	0.98627	/CONT-LEAK	*	CSCD300B-PLG-LF	*	FR1	*	LAMBDA-SVGR	*	
137					Q7TG	*	SUR-027-R	+					
138	113	6	6.58E-10	0.98720	C2DG01P-PMS-LF	*	/CONT-LEAK	*	FR1	*	LAMBDA-SVGR	*	
139					Q7TG	*	SUR-027-R	+					
140	78	6	6.58E-10	0.98814	/CONT-LEAK	*	FR1	*	LAMBDA-SVGR	*	Q7TG	*	
141					RHRC02BB-PMS-LF	*	SUR-027-R	+					
142	88	6	5.03E-10	0.98886	/CONT-LEAK	*	FR1	*	LAMBDA-SVGR	*	Q7TG	*	
143					SEVY03AX-ACX-LFI	*	SUR-027-R	+					
144	98	6	4.31E-10	0.98947	/CONT-LEAK	*	EE-CSCD300B-PLG	*	FR1	*	LAMBDA-SVGR	*	
145					Q7TG	*	SUR-027-R	+					
146	92	6	4.31E-10	0.99009	/CONT-LEAK	*	EE-C2DG01F-PLG	*	FR1	*	LAMBDA-SVGR	*	
147					Q7TG	*	SUR-027-R	+					
148	24	7	3.83E-10	0.99063	CONT-LEAK	*	FLOW-RHR-B3	*	FR1	*	LAMBDA-SVGR	*	
149					Q7TG	*	RHRB03BX-BCO-LF	*	SUR-002-L	+			
150	68	6	3.47E-10	0.99113	C2DG01F-PLG-LF	*	/CONT-LEAK	*	FR1	*	LAMBDA-SVGR	*	
151					Q7TG	*	SUR-027-R	+					
152	109	6	3.23E-10	0.99159	/CONT-LEAK	*	FR1	*	LAMBDA-SVGR	*	Q7TG	*	
153					SEVY03CB-FMS-LF	*	SUR-027-R	+					
154	63	6	2.99E-10	0.99202	2DG1PK18-ROO-LFO	*	/CONT-LEAK	*	FR1	*	LAMBDA-SVGR	*	
155					Q7TG	*	SUR-027-R	+					
156	99	6	2.99E-10	0.99244	/CONT-LEAK	*	CSCF068B-VCC-LF	*	FR1	*	LAMBDA-SVGR	*	
157					Q7TG	*	SUR-027-R	+					
158	87	6	2.99E-10	0.99287	/CONT-LEAK	*	FR1	*	LAMBDA-SVGR	*	Q7TG	*	
159					SEVY03CB-F-UUM	*	SUR-027-R	+					
160	70	6	2.99E-10	0.99330	/CONT-LEAK	*	FR1	*	LAMBDA-SVGR	*	Q7TG	*	
161					RHRB01BB-BOO-LF	*	SUR-027-R	+					
162	69	7	2.99E-10	0.99372	/CONT-LEAK	*	FLOW-RHR-B3	*	FR1	*	LAMBDA-SVGR	*	
163					Q7TG	*	RHRF48BB-VOO-LF	*	SUR-027-R	+			
164	103	6	1.80E-10	0.99398	/CONT-LEAK	*	FR1	*	LAMBDA-SVGR	*	Q7TG	*	
165					RHRF51BB-N-UUM	*	SUR-027-R	+					
166	100	7	1.80E-10	0.99424	/CONT-LEAK	*	FR1	*	LAMBDA-SVGR	*	Q7TG	*	
167					RHRF64BB-V-UUM	*	SCSF06BB-DENER	*	SUR-027-R	+			
168	96	6	1.80E-10	0.99449	/CONT-LEAK	*	FR1	*	LAMBDA-SVGR	*	Q7TG	*	
169					RHRF60BB-S-UUM	*	SUR-027-R	+					
170	93	6	1.80E-10	0.99475	/CONT-LEAK	*	FR1	*	LAMBDA-SVGR	*	Q7TG	*	
171					RHRF74BB-V-UUM	*	SUR-027-R	+					
172	90	7	1.80E-10	0.99500	/CONT-LEAK	*	FLOW-RHR-B3	*	FR1	*	LAMBDA-SVGR	*	
173					Q7TG	*	RHRF48BB-V-UUM	*	SUR-027-R	+			
174	86	7	1.80E-10	0.99526	/CONT-LEAK	*	FR1	*	LAMBDA-SVGR	*	Q7TG	*	
175					RHRF88BX-R-UUM	*	SCSF06BB-DENER	*	SUR-027-R	+			
176	85	7	1.80E-10	0.99552	/CONT-LEAK	*	FR1	*	LAMBDA-SVGR	*	Q7TG	*	
177					RHRF47BB-V-UUM	*	SCSF06BB-DENER	*	SUR-027-R	+			

178	83	6	1.80E-10	0.99577	/CONT-LEAK	*	FR1	*	LAMBDA-SVGR	*	Q7TG	*	
179					SEVY03AX-A-UUM	*	SUR-027-R	+					
180	82	6	1.80E-10	0.99603	/CONT-LEAK	*	FR1	*	LAMBDA-SVGR	*	Q7TG	*	
181					RHRF55BX-R-UUM	*	SUR-027-R	+					
182	81	6	1.80E-10	0.99628	/CONT-LEAK	*	FR1	*	LAMBDA-SVGR	*	Q7TG	*	
183					RHRF87BB-V-UUM	*	SUR-027-R	+					
184	76	6	1.80E-10	0.99654	/CONT-LEAK	*	FR1	*	LAMBDA-SVGR	*	Q7TG	*	
185					RHRF65BB-N-UUM	*	SUR-027-R	+					
186	75	6	1.80E-10	0.99680	/CONT-LEAK	*	FR1	*	LAMBDA-SVGR	*	Q7TG	*	
187					SCSF06BB-V-UUM	*	SUR-027-R	+					
188	67	6	1.80E-10	0.99705	/CONT-LEAK	*	FR1	*	LAMBDA-SVGR	*	Q7TG	*	
189					RHRH01BX-H-UUM	*	SUR-027-R	+					
190	112	6	1.80E-10	0.99731	2DG01PSC-OOO-LFO	*	/CONT-LEAK	*	FR1	*	LAMBDA-SVGR	*	
191					Q7TG	*	SUR-027-R	+					
192	101	6	1.80E-10	0.99756	2DG01PK18CA-LFOO	*	/CONT-LEAK	*	FR1	*	LAMBDA-SVGR	*	
193					Q7TG	*	SUR-027-R	+					
194	94	6	1.80E-10	0.99782	C2DG01F-S-UUM	*	/CONT-LEAK	*	FR1	*	LAMBDA-SVGR	*	
195					Q7TG	*	SUR-027-R	+					
196	89	6	1.80E-10	0.99808	/CONT-LEAK	*	CSCD300B-S-UUM	*	FR1	*	LAMBDA-SVGR	*	
197					Q7TG	*	SUR-027-R	+					
198	77	6	1.80E-10	0.99833	/CONT-LEAK	*	CSCF068B-V-UUM	*	FR1	*	LAMBDA-SVGR	*	
199					Q7TG	*	SUR-027-R	+					
200	116	7	1.65E-10	0.99857	/CONT-LEAK	*	FR1	*	LAMBDA-SVGR	*	LPCI-BETA	*	
201					LPCI-PMS-CM	*	Q7TG	*	SUR-027-R	+			
202	111	7	6.58E-11	0.99866	/CONT-LEAK	*	FR1	*	LAMBDA-SVGR	*	NOFLOW-RHR-B1	*	
203					Q7TG	*	RHRF04BB-VOC-LF	*	SUR-027-R	+			
204	106	6	6.58E-11	0.99875	/CONT-LEAK	*	FR1	*	LAMBDA-SVGR	*	Q7TG	*	
205					RHRF03BB-VOC-LF	*	SUR-027-R	+					
206	105	7	6.58E-11	0.99885	/CONT-LEAK	*	FR1	*	LAMBDA-SVGR	*	NOFLOW-RHR-B1	*	
207					Q7TG	*	RHR301BX-STR	*	SUR-027-R	+			
208	72	6	6.58E-11	0.99894	/CONT-LEAK	*	FR1	*	LAMBDA-SVGR	*	Q7TG	*	
209					RHRF47BB-VOC-LF	*	SUR-027-R	+					
210	71	6	6.58E-11	0.99904	/CONT-LEAK	*	FR1	*	LAMBDA-SVGR	*	Q7TG	*	
211					RHRF98BX-XOC-LF	*	SUR-027-R	+					
212	114	6	5.98E-11	0.99912	/CONT-LEAK	*	FR1	*	LAMBDA-SVGR	*	Q7TG	*	
213					RHRF31BX-CCC-LF	*	SUR-027-R	+					
214	107	6	5.98E-11	0.99921	C2DGF002-CCC-LF	*	/CONT-LEAK	*	FR1	*	LAMBDA-SVGR	*	
215					Q7TG	*	SUR-027-R	+					
216	115	6	5.03E-11	0.99928	/CONT-LEAK	*	CSCB068X-BCO-LF	*	FR1	*	LAMBDA-SVGR	*	
217					Q7TG	*	SUR-027-R	+					
218	79	6	5.03E-11	0.99935	1EB16212-BCO	*	/CONT-LEAK	*	FR1	*	LAMBDA-SVGR	*	
219					Q7TG	*	SUR-027-R	+					
220	64	6	5.03E-11	0.99942	CCB2DG1P-BCO-LF	*	/CONT-LEAK	*	FR1	*	LAMBDA-SVGR	*	
221					Q7TG	*	SUR-027-R	+					
222	118	7	4.49E-11	0.99949	/CONT-LEAK	*	FR1	*	LAMBDA-SVGR	*	LPCI-MOV-BETA	*	
223					LPCI-MOV-CM2	*	Q7TG	*	SUR-027-R	+			

224	117	7	4.49E-11	0.99955	/CONT-LEAK	*	FR1	*	LAMBDA-SVGR	*	LPCI-MOV-BETA	*
225					LPCI-MOV-CM1	*	Q7TG	*	SUR-027-R	+		
226	65	6	4.31E-11	0.99961	/CONT-LEAK	*	FR1	*	LAMBDA-SVGR	*	Q7TG	*
227					SEVB001X-BCO-LF	*	SUR-027-R	+				
228	62	6	4.31E-11	0.99967	1EB2Y22X-BCO	*	/CONT-LEAK	*	FR1	*	LAMBDA-SVGR	*
229					Q7TG	*	SUR-027-R	+				
230	120	6	4.31E-11	0.99973	1EB212YX-BCO-LF	*	/CONT-LEAK	*	FR1	*	LAMBDA-SVGR	*
231					Q7TG	*	SUR-027-R	+				
232	108	6	4.31E-11	0.99980	1EB36YB-BCO-LF	*	/CONT-LEAK	*	FR1	*	LAMBDA-SVGR	*
233					Q7TG	*	SUR-027-R	+				
234	95	6	4.31E-11	0.99986	1EB36XB-BCO-LF	*	/CONT-LEAK	*	FR1	*	LAMBDA-SVGR	*
235					Q7TG	*	SUR-027-R	+				
236	91	6	4.31E-11	0.99992	1EB236B-BCO-LF	*	/CONT-LEAK	*	FR1	*	LAMBDA-SVGR	*
237					Q7TG	*	SUR-027-R	+				
238	80	6	4.31E-11	0.99998	1EB36Y1X-BCO-LF	*	/CONT-LEAK	*	FR1	*	LAMBDA-SVGR	*
239					Q7TG	*	SUR-027-R	+				
240	84	7	1.44E-11	1.00000	/CONT-LEAK	*	FLOW-RHR-B3	*	FR1	*	LAMBDA-SVGR	*
241					Q7TG	*	RHRB03BX-BCO-LF	*	SUR-027-R	.		

TEMAC RUN TIME IN CPU SECONDS 179.20

FIRE-Y2 SEQUENCE

TOP EVENT FIRE-Y2 CONTAINS 72 EVENTS IN 120 CUT SETS

THE FREQUENCY OF TOP EVENT FIRE-Y2 IS 2.74E-06

DESCRIPTIVE STATISTICS FOR THE FREQUENCY OF TOP EVENT FIRE-Y2

N	400
MEAN	3.39E-06
STD DEV	2.20E-05
LOWER 5%	0.00E+00
LOWER 25%	0.00E+00
MEDIAN	0.00E+00
UPPER 25%	2.22E-07
UPPER 5%	7.90E-06

90% UNCERTAINTY INTERVAL FOR TOP EVENT FREQUENCY (INNERMOST BRACKETS DENOTE INTERQUARTILE RANGE, ASTERISK DENOTES MEDIAN, N DENOTES NOMINAL VALUE AND M DENOTES MEAN)

NOMENCLATURE:

PD = PARTIAL DERIVATIVE

TEF = FREQUENCY OF THE TOP EVENT

EV(J) = PROBABILITY OF EVENT J FOR BASE EVENTS
= FREQUENCY OF EVENT J FOR INITIATING EVENTS

MEASURES:

1. FOR BASE EVENTS AND INITIATING EVENTS:

RISK REDUCTION = PD x EV(J)
= TEF - TEF(EVALUATED WITH EV(J) = 0)

2. FOR BASE EVENTS ONLY:

RISK INCREASE = PD - RISK REDUCTION
= PD x (1 - EV(J))
= TEF(EVALUATED WITH EV(J) = 1) - TEF

FIRE-Y2 SEQUENCE
RISK REDUCTION BY BASE EVENT (WITH ASSOCIATED UNCERTAINTY INTERVALS)

BASE EVENT	OCCUR	PROB	(RANK)	RISK REDUCTION	(RANK)	LOWER 5%	UPPER 5%
Q8TG	120	9.50E-01	(4.0)	2.74E-06	(2.5)	0.00E+00	7.90E-06
LAMBDA-SVGR	120	1.40E-02	(12.0)	2.74E-06	(2.5)	0.00E+00	7.90E-06
FA7	120	1.30E-01	(8.0)	2.74E-06	(2.5)	0.00E+00	7.90E-06
FS2	120	3.00E-01	(6.0)	2.74E-06	(2.5)	0.00E+00	7.90E-06
SUR-002-L	60	1.60E-01	(7.0)	2.64E-06	(5.0)	0.00E+00	6.47E-06
CONT-LEAK	120	7.50E-01	(5.0)	2.34E-06	(6.0)	0.00E+00	6.47E-06
RHRH01BX-HTX-LFB	2	6.20E-03	(13.0)	4.00E-07	(7.0)	0.00E+00	1.28E-06
SCSF06BB-DENER	8	1.00E+00	(2.0)	2.52E-07	(8.0)		
C2DG01P-P-UUM	2	3.00E-03	(15.5)	1.94E-07	(10.5)	0.00E+00	2.94E-07
RHRC003B-P-UUM	2	3.00E-03	(15.5)	1.94E-07	(10.5)	0.00E+00	5.28E-07
RHRC02BB-P-NDUUM	2	3.00E-03	(15.5)	1.94E-07	(10.5)	0.00E+00	2.94E-07
RHRC02BB-P-UUM	2	3.00E-03	(15.5)	1.94E-07	(10.5)	0.00E+00	5.28E-07
RHRB01BB-BOO-CC	2	2.50E-03	(20.5)	1.61E-07	(14.0)	0.00E+00	2.74E-07
C2DG01P-PMS-CC	2	2.50E-03	(20.5)	1.61E-07	(14.0)	0.00E+00	2.74E-07
SEVY03CB-FMS-CC	2	2.50E-03	(20.5)	1.61E-07	(14.0)	0.00E+00	2.74E-07
SUR-027-R	60	1.80E-02	(11.0)	9.89E-08	(16.0)	0.00E+00	4.91E-07
CSCD300B-PLG-LF	2	1.20E-03	(24.0)	7.75E-08	(17.0)	0.00E+00	1.67E-07
RHRC02BB-PMS-LF	2	1.10E-03	(25.5)	7.10E-08	(18.5)	0.00E+00	1.61E-07
C2DG01P-PMS-LF	2	1.10E-03	(25.5)	7.10E-08	(18.5)	0.00E+00	1.61E-07
SEVY03AX-ACX-LFI	2	8.40E-04	(27.0)	5.42E-08	(20.0)	0.00E+00	9.27E-08
FLOW-RHR-B3	6	1.00E+00	(2.0)	5.32E-08	(21.0)		
EE-CSCD300B-PLG	2	7.20E-04	(28.5)	4.65E-08	(22.5)	0.00E+00	1.10E-07
EE-C2DG01F-PLG	2	7.20E-04	(28.5)	4.65E-08	(22.5)	0.00E+00	1.10E-07
C2DG01F-PLG-LF	2	5.80E-04	(30.0)	3.75E-08	(24.0)	0.00E+00	8.32E-08
SEVY03CB-FMS-LF	2	5.40E-04	(31.0)	3.49E-08	(25.0)	0.00E+00	9.61E-08
SEVY03CB-F-UUM	2	5.00E-04	(34.0)	3.23E-08	(28.0)	0.00E+00	9.61E-08
CSCF068B-VCC-LF	2	5.00E-04	(34.0)	3.23E-08	(28.0)	0.00E+00	1.16E-07
2DG1PK18-ROO-LFO	2	5.00E-04	(34.0)	3.23E-08	(28.0)	0.00E+00	5.50E-08
RHRB01BB-BOO-LF	2	5.00E-04	(34.0)	3.23E-08	(28.0)	0.00E+00	1.10E-07
RHRF48BB-VOO-LF	2	5.00E-04	(34.0)	3.23E-08	(28.0)	0.00E+00	1.16E-07
RHRF64BB-V-UUM	2	3.00E-04	(45.5)	1.94E-08	(39.5)	0.00E+00	3.44E-08
RHRF87BB-V-UUM	2	3.00E-04	(45.5)	1.94E-08	(39.5)	0.00E+00	3.44E-08
RHRF74BB-V-UUM	2	3.00E-04	(45.5)	1.94E-08	(39.5)	0.00E+00	3.44E-08
RHRF65BB-N-UUM	2	3.00E-04	(45.5)	1.94E-08	(39.5)	0.00E+00	3.44E-08
RHRF60BB-S-UUM	2	3.00E-04	(45.5)	1.94E-08	(39.5)	0.00E+00	3.44E-08
RHRF55BX-R-UUM	2	3.00E-04	(45.5)	1.94E-08	(39.5)	0.00E+00	3.44E-08
RHRF51BB-N-UUM	2	3.00E-04	(45.5)	1.94E-08	(39.5)	0.00E+00	3.44E-08
RHRF48BB-V-UUM	2	3.00E-04	(45.5)	1.94E-08	(39.5)	0.00E+00	3.44E-08
RHRF47BB-V-UUM	2	3.00E-04	(45.5)	1.94E-08	(39.5)	0.00E+00	3.44E-08
C2DG01F-S-UUM	2	3.00E-04	(45.5)	1.94E-08	(39.5)	0.00E+00	3.19E-08

CSCF068B-V-UUM	2	3.00E-04 (45.5)	1.94E-08 (39.5)	0.00E+00	3.44E-08
CSCD300B-S-UUM	2	3.00E-04 (45.5)	1.94E-08 (39.5)	0.00E+00	3.19E-08
2DG01PSC-OOO-LFO	2	3.00E-04 (45.5)	1.94E-08 (39.5)	0.00E+00	4.25E-08
RHRH01BX-H-UUM	2	3.00E-04 (45.5)	1.94E-08 (39.5)	0.00E+00	3.19E-08
2DG01PK18CA-LFOO	2	3.00E-04 (45.5)	1.94E-08 (39.5)	0.00E+00	4.25E-08
RHRF88BX-R-UUM	2	3.00E-04 (45.5)	1.94E-08 (39.5)	0.00E+00	3.44E-08
SEVY03AX-A-UUM	2	3.00E-04 (45.5)	1.94E-08 (39.5)	0.00E+00	3.19E-08
SCSF06BB-V-UUM	2	3.00E-04 (45.5)	1.94E-08 (39.5)	0.00E+00	3.44E-08
LPCI-BETA	2	1.10E-01 (9.0)	1.78E-08 (49.5)	0.00E+00	3.48E-08
LPCI-PMS-CM	2	2.50E-03 (20.5)	1.78E-08 (49.5)	0.00E+00	3.48E-08
NOFLOW-RHR-B1	4	1.00E+00 (2.0)	1.42E-08 (51.0)		
LPCI-MOV-BETA	4	3.00E-02 (10.0)	9.69E-09 (52.0)	0.00E+00	1.34E-08
RHRF98BX-XOC-LF	2	1.10E-04 (57.0)	7.10E-09 (55.0)	0.00E+00	1.45E-08
RHRF47BB-VOC-LF	2	1.10E-04 (57.0)	7.10E-09 (55.0)	0.00E+00	1.45E-08
RHRF04BB-VOC-LF	2	1.10E-04 (57.0)	7.10E-09 (55.0)	0.00E+00	1.45E-08
RHRF03BB-VOC-LF	2	1.10E-04 (57.0)	7.10E-09 (55.0)	0.00E+00	1.45E-08
RHR301BX-STR	2	1.10E-04 (57.0)	7.10E-09 (55.0)	0.00E+00	1.30E-08
RHRF31BX-CCC-LF	2	1.00E-04 (60.5)	6.46E-09 (58.5)	0.00E+00	1.68E-08
C2DGF002-CCC-LF	2	1.00E-04 (60.5)	6.46E-09 (58.5)	0.00E+00	1.68E-08
CSCB068X-BCO-LF	2	8.40E-05 (63.0)	5.42E-09 (61.0)	0.00E+00	1.01E-08
CCB2DG1P-BCO-LF	2	8.40E-05 (63.0)	5.42E-09 (61.0)	0.00E+00	1.01E-08
1EB16212-BCO	2	8.40E-05 (63.0)	5.42E-09 (61.0)	0.00E+00	1.01E-08
LPCI-MOV-CM2	2	2.50E-03 (20.5)	4.84E-09 (63.5)	0.00E+00	6.70E-09
LPCI-MOV-CM1	2	2.50E-03 (20.5)	4.84E-09 (63.5)	0.00E+00	6.70E-09
1EB36YB-BCO-LF	2	7.20E-05 (68.0)	4.65E-09 (68.0)	0.00E+00	8.75E-09
1EB36Y1X-BCO-LF	2	7.20E-05 (68.0)	4.65E-09 (68.0)	0.00E+00	8.75E-09
1EB236B-BCO-LF	2	7.20E-05 (68.0)	4.65E-09 (68.0)	0.00E+00	8.75E-09
1EB36XB-BCO-LF	2	7.20E-05 (68.0)	4.65E-09 (68.0)	0.00E+00	8.75E-09
1EB212YX-BCO-LF	2	7.20E-05 (68.0)	4.65E-09 (68.0)	0.00E+00	8.75E-09
SEVB001X-BCO-LF	2	7.20E-05 (68.0)	4.65E-09 (68.0)	0.00E+00	8.75E-09
1EB2Y22X-BCO	2	7.20E-05 (68.0)	4.65E-09 (68.0)	0.00E+00	8.75E-09
RHRB03BX-BCO-LF	2	2.40E-05 (72.0)	1.55E-09 (72.0)	0.00E+00	3.16E-09

FIRE-Y2 SEQUENCE
RISK INCREASE BY BASE EVENT (WITH ASSOCIATED UNCERTAINTY INTERVALS)

BASE EVENT	OCCUR	PROB	(RANK)	RISK INCREASE	(RANK)	LOWER 5%	UPPER 5%
LAMBDA-SVGR	120	1.40E-02	(12.0)	1.93E-04	(1.0)	0.00E+00	1.39E-03
RHRB03BX-BCO-LF	2	2.40E-05	(72.0)	6.46E-05	(2.0)	0.00E+00	2.12E-04
1EB36XB-BCO-LF	2	7.20E-05	(68.0)	6.46E-05	(6.0)	0.00E+00	2.12E-04
SEVB001X-BCO-LF	2	7.20E-05	(68.0)	6.46E-05	(6.0)	0.00E+00	2.12E-04
1EB212YX-BCO-LF	2	7.20E-05	(68.0)	6.46E-05	(6.0)	0.00E+00	2.12E-04
1EB36YB-BCO-LF	2	7.20E-05	(68.0)	6.46E-05	(6.0)	0.00E+00	2.12E-04
1EB2Y22X-BCO	2	7.20E-05	(68.0)	6.46E-05	(6.0)	0.00E+00	2.12E-04
1EB36Y1X-BCO-LF	2	7.20E-05	(68.0)	6.46E-05	(6.0)	0.00E+00	2.12E-04
1EB236B-BCO-LF	2	7.20E-05	(68.0)	6.46E-05	(6.0)	0.00E+00	2.12E-04
CCB2DG1P-BCO-LF	2	8.40E-05	(63.0)	6.46E-05	(11.0)	0.00E+00	2.12E-04
CSCB068X-BCO-LF	2	8.40E-05	(63.0)	6.46E-05	(11.0)	0.00E+00	2.12E-04
1EB16212-BCO	2	8.40E-05	(63.0)	6.46E-05	(11.0)	0.00E+00	2.12E-04
RHRF31BX-CCC-LF	2	1.00E-04	(60.5)	6.46E-05	(16.0)	0.00E+00	2.12E-04
C2DGF002-CCC-LF	2	1.00E-04	(60.5)	6.46E-05	(16.0)	0.00E+00	2.12E-04
RHRF98BX-XOC-LF	2	1.10E-04	(57.0)	6.46E-05	(16.0)	0.00E+00	2.12E-04
RHRF47BB-VOC-LF	2	1.10E-04	(57.0)	6.46E-05	(16.0)	0.00E+00	2.12E-04
RHRF04BB-VOC-LF	2	1.10E-04	(57.0)	6.46E-05	(16.0)	0.00E+00	2.12E-04
RHR301BX-STR	2	1.10E-04	(57.0)	6.46E-05	(16.0)	0.00E+00	2.12E-04
RHRF03BB-VOC-LF	2	1.10E-04	(57.0)	6.46E-05	(16.0)	0.00E+00	2.12E-04
RHRH01BX-H-UUM	2	3.00E-04	(45.5)	6.46E-05	(28.5)	0.00E+00	2.12E-04
RHRF87BB-V-UUM	2	3.00E-04	(45.5)	6.46E-05	(28.5)	0.00E+00	2.12E-04
RHRF65BB-N-UUM	2	3.00E-04	(45.5)	6.46E-05	(28.5)	0.00E+00	2.12E-04
RHRF55BX-R-UUM	2	3.00E-04	(45.5)	6.46E-05	(28.5)	0.00E+00	2.12E-04
RHRF51BB-N-UUM	2	3.00E-04	(45.5)	6.46E-05	(28.5)	0.00E+00	2.12E-04
C2DG01F-S-UUM	2	3.00E-04	(45.5)	6.46E-05	(28.5)	0.00E+00	2.12E-04
RHRF60BB-S-UUM	2	3.00E-04	(45.5)	6.46E-05	(28.5)	0.00E+00	2.12E-04
RHRF88BX-R-UUM	2	3.00E-04	(45.5)	6.46E-05	(28.5)	0.00E+00	2.12E-04
CSCF068B-V-UUM	2	3.00E-04	(45.5)	6.46E-05	(28.5)	0.00E+00	2.12E-04
CSCD300B-S-UUM	2	3.00E-04	(45.5)	6.46E-05	(28.5)	0.00E+00	2.12E-04
RHRF64BB-V-UUM	2	3.00E-04	(45.5)	6.46E-05	(28.5)	0.00E+00	2.12E-04
RHRF74BB-V-UUM	2	3.00E-04	(45.5)	6.46E-05	(28.5)	0.00E+00	2.12E-04
RHRF47BB-V-UUM	2	3.00E-04	(45.5)	6.46E-05	(28.5)	0.00E+00	2.12E-04
SEVY03AX-A-UUM	2	3.00E-04	(45.5)	6.46E-05	(28.5)	0.00E+00	2.12E-04
2DG01PSC-OOO-LFO	2	3.00E-04	(45.5)	6.46E-05	(28.5)	0.00E+00	2.12E-04
RHRF48BB-V-UUM	2	3.00E-04	(45.5)	6.46E-05	(28.5)	0.00E+00	2.12E-04
2DG01PK18CA-LFOO	2	3.00E-04	(45.5)	6.46E-05	(28.5)	0.00E+00	2.12E-04
SCSF06BB-V-UUM	2	3.00E-04	(45.5)	6.46E-05	(28.5)	0.00E+00	2.12E-04
SEVY03CB-F-UUM	2	5.00E-04	(34.0)	6.45E-05	(40.0)	0.00E+00	2.11E-04
RHRF48BB-VOO-LF	2	5.00E-04	(34.0)	6.45E-05	(40.0)	0.00E+00	2.11E-04
CSCF068B-VCC-LF	2	5.00E-04	(34.0)	6.45E-05	(40.0)	0.00E+00	2.11E-04

2DG1PK18-ROO-LFO	2	5.00E-04 (34.0)	6.45E-05 (40.0)	0.00E+00	2.11E-04
RHRB01BB-BOO-LF	2	5.00E-04 (34.0)	6.45E-05 (40.0)	0.00E+00	2.11E-04
SEVY03CB-FMS-LF	2	5.40E-04 (31.0)	6.45E-05 (43.0)	0.00E+00	2.11E-04
C2DG01F-PLG-LF	2	5.80E-04 (30.0)	6.45E-05 (44.0)	0.00E+00	2.11E-04
EE-CSCD300B-PLG	2	7.20E-04 (28.5)	6.45E-05 (45.5)	0.00E+00	2.12E-04
EE-C2DG01F-PLG	2	7.20E-04 (28.5)	6.45E-05 (45.5)	0.00E+00	2.12E-04
SEVY03AX-ACX-LFI	2	8.40E-04 (27.0)	6.45E-05 (47.0)	0.00E+00	2.12E-04
C2DG01P-PMS-LF	2	1.10E-03 (25.5)	6.45E-05 (48.5)	0.00E+00	2.11E-04
RHRC02BB-PMS-LF	2	1.10E-03 (25.5)	6.45E-05 (48.5)	0.00E+00	2.11E-04
CSCD300B-PLG-LF	2	1.20E-03 (24.0)	6.45E-05 (50.0)	0.00E+00	2.11E-04
C2DG01P-PMS-CC	2	2.50E-03 (20.5)	6.44E-05 (52.0)	0.00E+00	2.11E-04
RHRB01BB-BOO-CC	2	2.50E-03 (20.5)	6.44E-05 (52.0)	0.00E+00	2.11E-04
SEVY03CB-FMS-CC	2	2.50E-03 (20.5)	6.44E-05 (52.0)	0.00E+00	2.11E-04
C2DG01P-P-UUM	2	3.00E-03 (15.5)	6.44E-05 (55.5)	0.00E+00	2.11E-04
RHRC02BB-P-UUM	2	3.00E-03 (15.5)	6.44E-05 (55.5)	0.00E+00	2.11E-04
RHRC02BB-P-NDUUM	2	3.00E-03 (15.5)	6.44E-05 (55.5)	0.00E+00	2.11E-04
RHRC003B-P-UUM	2	3.00E-03 (15.5)	6.44E-05 (55.5)	0.00E+00	2.11E-04
RHRH01BX-HTX-LFB	2	6.20E-03 (13.0)	6.42E-05 (58.0)	0.00E+00	2.11E-04
FA7	120	1.30E-01 (8.0)	1.83E-05 (59.0)	0.00E+00	6.31E-05
SUR-002-L	60	1.60E-01 (7.0)	1.38E-05 (60.0)	0.00E+00	6.28E-05
LPCI-PMS-CM	2	2.50E-03 (20.5)	7.09E-06 (61.0)	0.00E+00	2.39E-05
FS2	120	3.00E-01 (6.0)	6.38E-06 (62.0)	0.00E+00	1.74E-05
SUR-027-R	60	1.80E-02 (11.0)	5.39E-06 (63.0)	0.00E+00	1.10E-05
LPCI-MOV-CM2	2	2.50E-03 (20.5)	1.93E-06 (64.5)	0.00E+00	4.56E-06
LPCI-MOV-CM1	2	2.50E-03 (20.5)	1.93E-06 (64.5)	0.00E+00	4.56E-06
CONT-LEAK	120	7.50E-01 (5.0)	7.80E-07 (66.0)	-4.91E-07	0.00E+00
LPCI-MOV-BETA	4	3.00E-02 (10.0)	3.13E-07 (67.0)	0.00E+00	5.32E-07
Q8TG	120	9.50E-01 (4.0)	1.44E-07 (68.0)	0.00E+00	3.43E-07
LPCI-BETA	2	1.10E-01 (9.0)	1.44E-07 (69.0)	0.00E+00	2.39E-07
SCSF06BB-DENER	8	1.00E+00 (2.0)	0.00E+00 (71.0)		
FLOW-RHR-B3	6	1.00E+00 (2.0)	0.00E+00 (71.0)		
NOFLOW-RHR-B1	4	1.00E+00 (2.0)	0.00E+00 (71.0)		

FIRE-Y2 SEQUENCE
UNCERTAINTY IMPORTANCE BY BASE EVENT

BASE EVENT	OCCUR	PROB	(RANK)	% REDUCTION IN THE UNCERTAINTY OF LOG RISK	(RANK)	Y.05/TE.05*	Y.95/TE.95*
SUR-002-L	60	1.60E-01	(7.0)	48.1	(1.0)	NA	1.95
SUR-027-R	60	1.80E-02	(11.0)	20.6	(2.0)	NA	0.86
CONT-LEAK	120	7.50E-01	(5.0)	12.6	(3.0)	NA	0.67
LAMBDA-SVGR	120	1.40E-02	(12.0)	3.2	(4.0)	NA	2.47
RHRH01BX-HTX-LFB	2	6.20E-03	(13.0)	2.6	(5.0)	NA	1.07
C2DG01P-P-UUM	2	3.00E-03	(15.5)	2.0	(6.5)	NA	1.05
RHRC02BB-P-NDUUM	2	3.00E-03	(15.5)	2.0	(6.5)	NA	1.05
SEVY03AX-ACX-LFI	2	8.40E-04	(27.0)	1.9	(8.0)	NA	0.96
CSCF068B-VCC-LF	2	5.00E-04	(34.0)	1.9	(9.5)	NA	1.02
RHRF48BB-VOO-LF	2	5.00E-04	(34.0)	1.9	(9.5)	NA	1.02
RHR301BX-STR	2	1.10E-04	(57.0)	1.7	(11.0)	NA	1.00
EE-CSCD300B-PLG	2	7.20E-04	(28.5)	1.6	(12.5)	NA	1.02
EE-C2DG01F-PLG	2	7.20E-04	(28.5)	1.6	(12.5)	NA	1.02
LPCI-MOV-BETA	4	3.00E-02	(10.0)	1.6	(14.0)	NA	1.00
RHRF65BB-N-UUM	2	3.00E-04	(45.5)	1.5	(20.5)	NA	1.05
RHRF55BX-R-UUM	2	3.00E-04	(45.5)	1.5	(20.5)	NA	1.05
RHRF51BB-N-UUM	2	3.00E-04	(45.5)	1.5	(20.5)	NA	1.05
RHRF48BB-V-UUM	2	3.00E-04	(45.5)	1.5	(20.5)	NA	1.05
RHRF47BB-V-UUM	2	3.00E-04	(45.5)	1.5	(20.5)	NA	1.05
RHRF64BB-V-UUM	2	3.00E-04	(45.5)	1.5	(20.5)	NA	1.05
RHRF74BB-V-UUM	2	3.00E-04	(45.5)	1.5	(20.5)	NA	1.05
SCSF06BB-V-UUM	2	3.00E-04	(45.5)	1.5	(20.5)	NA	1.05
RHRF87BB-V-UUM	2	3.00E-04	(45.5)	1.5	(20.5)	NA	1.05
RHRF88BX-R-UUM	2	3.00E-04	(45.5)	1.5	(20.5)	NA	1.05
CSCF068B-V-UUM	2	3.00E-04	(45.5)	1.5	(20.5)	NA	1.05
RHRF60BB-S-UUM	2	3.00E-04	(45.5)	1.5	(20.5)	NA	1.05
RHRB01BB-BOO-LF	2	5.00E-04	(34.0)	1.4	(27.0)	NA	1.00
RHRB03BX-BCO-LF	2	2.40E-05	(72.0)	1.4	(28.0)	NA	1.00
Q8TG	120	9.50E-01	(4.0)	1.3	(29.0)	NA	0.97
LPCI-BETA	2	1.10E-01	(9.0)	1.2	(30.0)	NA	1.00
RHRF47BB-VOC-LF	2	1.10E-04	(57.0)	1.2	(32.5)	NA	1.01
RHRF04BB-VOC-LF	2	1.10E-04	(57.0)	1.2	(32.5)	NA	1.01
RHRF03BB-VOC-LF	2	1.10E-04	(57.0)	1.2	(32.5)	NA	1.01
RHRF98BX-XOC-LF	2	1.10E-04	(57.0)	1.2	(32.5)	NA	1.01
SEVY03CB-FMS-LF	2	5.40E-04	(31.0)	1.1	(35.0)	NA	1.00
FS2	120	3.00E-01	(6.0)	0.9	(36.0)	NA	0.99
CSCD300B-PLG-LF	2	1.20E-03	(24.0)	0.9	(37.0)	NA	0.97
C2DG01F-PLG-LF	2	5.80E-04	(30.0)	0.8	(38.0)	NA	0.99
FA7	120	1.30E-01	(8.0)	0.8	(39.0)	NA	1.20
CSCB068X-BCO-LF	2	8.40E-05	(63.0)	0.8	(41.0)	NA	1.00

CCB2DG1P-BCO-LF	2	8.40E-05 (63.0)	0.8	(41.0)	NA	1.00
1EB16212-BCO	2	8.40E-05 (63.0)	0.8	(41.0)	NA	1.00
RHRC02BB-P-UUM	2	3.00E-03 (15.5)	0.5	(43.5)	NA	1.00
RHRC003B-P-UUM	2	3.00E-03 (15.5)	0.5	(43.5)	NA	1.00
C2DG01P-PMS-LF	2	1.10E-03 (25.5)	0.0	(57.0)		
RHRH01BX-H-UUM	2	3.00E-04 (45.5)	0.0	(57.0)		
1EB36YB-BCO-LF	2	7.20E-05 (68.0)	0.0	(57.0)		
C2DG01P-PMS-CC	2	2.50E-03 (20.5)	0.0	(57.0)		
1EB36Y1X-BCO-LF	2	7.20E-05 (68.0)	0.0	(57.0)		
C2DG01F-S-UUM	2	3.00E-04 (45.5)	0.0	(57.0)		
1EB236B-BCO-LF	2	7.20E-05 (68.0)	0.0	(57.0)		
RHRF31BX-CCC-LF	2	1.00E-04 (60.5)	0.0	(57.0)		
RHRC02BB-PMS-LF	2	1.10E-03 (25.5)	0.0	(57.0)		
CSCD300B-S-UUM	2	3.00E-04 (45.5)	0.0	(57.0)		
2DG1PK18-ROO-LFO	2	5.00E-04 (34.0)	0.0	(57.0)		
1EB36XB-BCO-LF	2	7.20E-05 (68.0)	0.0	(57.0)		
RHRB01BB-BOO-CC	2	2.50E-03 (20.5)	0.0	(57.0)		
2DG01PSC-OOO-LFO	2	3.00E-04 (45.5)	0.0	(57.0)		
LPCI-PMS-CM	2	2.50E-03 (20.5)	0.0	(57.0)		
2DG01PK18CA-LFOO	2	3.00E-04 (45.5)	0.0	(57.0)		
SEVY03AX-A-UUM	2	3.00E-04 (45.5)	0.0	(57.0)		
LPCI-MOV-CM2	2	2.50E-03 (20.5)	0.0	(57.0)		
SEVB001X-BCO-LF	2	7.20E-05 (68.0)	0.0	(57.0)		
LPCI-MOV-CM1	2	2.50E-03 (20.5)	0.0	(57.0)		
C2DGF002-CCC-LF	2	1.00E-04 (60.5)	0.0	(57.0)		
1EB2Y22X-BCO	2	7.20E-05 (68.0)	0.0	(57.0)		
SEVY03CB-F-UUM	2	5.00E-04 (34.0)	0.0	(57.0)		
SEVY03CB-FMS-CC	2	2.50E-03 (20.5)	0.0	(57.0)		
1EB212YX-BCO-LF	2	7.20E-05 (68.0)	0.0	(57.0)		
SCSF06BB-DENER	8	1.00E+00 (2.0)				
FLOW-RHR-B3	6	1.00E+00 (2.0)				
NOFLOW-RHR-B1	4	1.00E+00 (2.0)				

FIRE-Y2 SEQUENCE

CUT SET NUMBERS, CUT SET ORDERS, CUT SET FREQUENCIES,
CUMULATIVE NORMALIZED CUT SET FREQUENCIES AND CUT SETS
FOR TOP EVENT FIRE-Y2 WITH TOP EVENT FREQUENCY 2.74E-06

(THE FIRST COLUMN OF NUMBERS IS THE LINE NUMBERS FOR THE FILE TEMACSETS.DNF)

2	44	7	3.86E-07	0.14109	CONT-LEAK	*	FA7	*	FS2	*	LAMBDA-SVGR	*		
3					Q8TG	*	RHRH01BX-HTX-LFB	*	SUR-002-L	+				
4	6	7	1.87E-07	0.20936	C2DG01P-P-UUM	*	CONT-LEAK	*	FA7	*	FS2	*		
5					LAMBDA-SVGR	*	Q8TG	*	SUR-002-L	+				
6	37	7	1.87E-07	0.27763	CONT-LEAK	*	FA7	*	FS2	*	LAMBDA-SVGR	*		
7					Q8TG	*	RHRC02BB-P-NDUUM	*	SUR-002-L	+				
8	13	7	1.87E-07	0.34590	CONT-LEAK	*	FA7	*	FS2	*	LAMBDA-SVGR	*		
9					Q8TG	*	RHRC003B-P-UUM	*	SUR-002-L	+				
10	14	8	1.87E-07	0.41417	CONT-LEAK	*	FA7	*	FS2	*	LAMBDA-SVGR	*		
11					Q8TG	*	RHRC02BB-P-UUM	*	SCSF06BB-DENER	*	SUR-002-L	+		
12	42	7	1.56E-07	0.47106	CONT-LEAK	*	FA7	*	FS2	*	LAMBDA-SVGR	*		
13					Q8TG	*	RHRB01BB-BOO-CC	*	SUR-002-L	+				
14	50	7	1.56E-07	0.52795	C2DG01P-PMS-CC	*	CONT-LEAK	*	FA7	*	FS2	*		
15					LAMBDA-SVGR	*	Q8TG	*	SUR-002-L	+				
16	1	7	1.56E-07	0.58484	CONT-LEAK	*	FA7	*	FS2	*	LAMBDA-SVGR	*		
17					Q8TG	*	SEVY03CB-FMS-CC	*	SUR-002-L	+				
18	59	7	7.47E-08	0.61215	CONT-LEAK	*	CSCD300B-PLG-LF	*	FA7	*	FS2	*		
19					LAMBDA-SVGR	*	Q8TG	*	SUR-002-L	+				
20	53	7	6.85E-08	0.63718	C2DG01P-PMS-LF	*	CONT-LEAK	*	FA7	*	FS2	*		
21					LAMBDA-SVGR	*	Q8TG	*	SUR-002-L	+				
22	18	7	6.85E-08	0.66222	CONT-LEAK	*	FA7	*	FS2	*	LAMBDA-SVGR	*		
23					Q8TG	*	RHRC02BB-PMS-LF	*	SUR-002-L	+				
24	28	7	5.23E-08	0.68133	CONT-LEAK	*	FA7	*	FS2	*	LAMBDA-SVGR	*		
25					Q8TG	*	SEVY03AX-ACX-LFI	*	SUR-002-L	+				
26	32	7	4.48E-08	0.69772	CONT-LEAK	*	EE-C2DG01F-PLG	*	FA7	*	FS2	*		
27					LAMBDA-SVGR	*	Q8TG	*	SUR-002-L	+				
28	38	7	4.48E-08	0.71410	CONT-LEAK	*	EE-CSCD300B-PLG	*	FA7	*	FS2	*		
29					LAMBDA-SVGR	*	Q8TG	*	SUR-002-L	+				
30	8	7	3.61E-08	0.72730	C2DG01F-PLG-LF	*	CONT-LEAK	*	FA7	*	FS2	*		
31					LAMBDA-SVGR	*	Q8TG	*	SUR-002-L	+				
32	49	7	3.36E-08	0.73959	CONT-LEAK	*	FA7	*	FS2	*	LAMBDA-SVGR	*		
33					Q8TG	*	SEVY03CB-FMS-LF	*	SUR-002-L	+				
34	3	7	3.11E-08	0.75097	2DG1PK18-ROO-LFO	*	CONT-LEAK	*	FA7	*	FS2	*		
35					LAMBDA-SVGR	*	Q8TG	*	SUR-002-L	+				
36	39	7	3.11E-08	0.76235	CONT-LEAK	*	CSCF068B-VCC-LF	*	FA7	*	FS2	*		
37					LAMBDA-SVGR	*	Q8TG	*	SUR-002-L	+				
38	9	8	3.11E-08	0.77372	CONT-LEAK	*	FA7	*	FLOW-RHR-B3	*	FS2	*		
39					LAMBDA-SVGR	*	Q8TG	*	RHRF48BB-VOO-LF	*	SUR-002-L	+		

40	10	7	3.11E-08	0.78510	CONT-LEAK	*	FA7	*	FS2	*	LAMBDA-SVGR	*	
41					Q8TG	*	RHRB01BB-BOO-LF	*	SUR-002-L	+			
42	27	7	3.11E-08	0.79648	CONT-LEAK	*	FA7	*	FS2	*	LAMBDA-SVGR	*	
43					Q8TG	*	SEVY03CB-F-UUM	*	SUR-002-L	+			
44	29	7	1.87E-08	0.80331	CONT-LEAK	*	CSCD300B-S-UUM	*	FA7	*	FS2	*	
45					LAMBDA-SVGR	*	Q8TG	*	SUR-002-L	+			
46	52	7	1.87E-08	0.81014	2DG01PSC-OOO-LFO	*	CONT-LEAK	*	FA7	*	FS2	*	
47					LAMBDA-SVGR	*	Q8TG	*	SUR-002-L	+			
48	34	7	1.87E-08	0.81696	C2DG01F-S-UUM	*	CONT-LEAK	*	FA7	*	FS2	*	
49					LAMBDA-SVGR	*	Q8TG	*	SUR-002-L	+			
50	17	7	1.87E-08	0.82379	CONT-LEAK	*	CSCF068B-V-UUM	*	FA7	*	FS2	*	
51					LAMBDA-SVGR	*	Q8TG	*	SUR-002-L	+			
52	41	7	1.87E-08	0.83062	2DG01PK18CA-LFOO	*	CONT-LEAK	*	FA7	*	FS2	*	
53					LAMBDA-SVGR	*	Q8TG	*	SUR-002-L	+			
54	7	7	1.87E-08	0.83744	CONT-LEAK	*	FA7	*	FS2	*	LAMBDA-SVGR	*	
55					Q8TG	*	RHRH01BX-H-UUM	*	SUR-002-L	+			
56	15	7	1.87E-08	0.84427	CONT-LEAK	*	FA7	*	FS2	*	LAMBDA-SVGR	*	
57					Q8TG	*	SCSF06BB-V-UUM	*	SUR-002-L	+			
58	26	8	1.87E-08	0.85110	CONT-LEAK	*	FA7	*	FS2	*	LAMBDA-SVGR	*	
59					Q8TG	*	RHRF88BX-R-UUM	*	SCSF06BB-DENER	*	SUR-002-L	+	
60	23	7	1.87E-08	0.85792	CONT-LEAK	*	FA7	*	FS2	*	LAMBDA-SVGR	*	
61					Q8TG	*	SEVY03AX-A-UUM	*	SUR-002-L	+			
62	43	7	1.87E-08	0.86475	CONT-LEAK	*	FA7	*	FS2	*	LAMBDA-SVGR	*	
63					Q8TG	*	RHRF51BB-N-UUM	*	SUR-002-L	+			
64	30	8	1.87E-08	0.87158	CONT-LEAK	*	FA7	*	FLOW-RHR-B3	*	FS2	*	
65					LAMBDA-SVGR	*	Q8TG	*	RHRF48BB-V-UUM	*	SUR-002-L	+	
66	22	7	1.87E-08	0.87841	CONT-LEAK	*	FA7	*	FS2	*	LAMBDA-SVGR	*	
67					Q8TG	*	RHRF55BX-R-UUM	*	SUR-002-L	+			
68	33	7	1.87E-08	0.88523	CONT-LEAK	*	FA7	*	FS2	*	LAMBDA-SVGR	*	
69					Q8TG	*	RHRF74BB-V-UUM	*	SUR-002-L	+			
70	21	7	1.87E-08	0.89206	CONT-LEAK	*	FA7	*	FS2	*	LAMBDA-SVGR	*	
71					Q8TG	*	RHRF87BB-V-UUM	*	SUR-002-L	+			
72	40	8	1.87E-08	0.89889	CONT-LEAK	*	FA7	*	FS2	*	LAMBDA-SVGR	*	
73					Q8TG	*	RHRF64BB-V-UUM	*	SCSF06BB-DENER	*	SUR-002-L	+	
74	25	8	1.87E-08	0.90571	CONT-LEAK	*	FA7	*	FS2	*	LAMBDA-SVGR	*	
75					Q8TG	*	RHRF47BB-V-UUM	*	SCSF06BB-DENER	*	SUR-002-L	+	
76	36	7	1.87E-08	0.91254	CONT-LEAK	*	FA7	*	FS2	*	LAMBDA-SVGR	*	
77					Q8TG	*	RHRF60BB-S-UUM	*	SUR-002-L	+			
78	16	7	1.87E-08	0.91937	CONT-LEAK	*	FA7	*	FS2	*	LAMBDA-SVGR	*	
79					Q8TG	*	RHRF65BB-N-UUM	*	SUR-002-L	+			
80	56	8	1.71E-08	0.92563	CONT-LEAK	*	FA7	*	FS2	*	LAMBDA-SVGR	*	
81					LPCI-BETA	*	LPCI-PMS-CM	*	Q8TG	*	SUR-002-L	+	
82	104	7	1.45E-08	0.93092	/CONT-LEAK	*	FA7	*	FS2	*	LAMBDA-SVGR	*	
83					Q8TG	*	RHRH01BX-HTX-LFB	*	SUR-027-R	+			
84	66	7	7.00E-09	0.93348	C2DG01P-P-UUM	*	/CONT-LEAK	*	FA7	*	FS2	*	
85					LAMBDA-SVGR	*	Q8TG	*	SUR-027-R	+			

86	97	7	7.00E-09	0.93604	/CONT-LEAK	*	FA7	*	FS2	*	LAMBDA-SVGR	*	
87					Q8TG	*	RHRC02BB-P-NDUUM	*	SUR-027-R	+			
88	74	8	7.00E-09	0.93860	/CONT-LEAK	*	FA7	*	FS2	*	LAMBDA-SVGR	*	
89					Q8TG	*	RHRC02BB-P-UUM	*	SCSF06BB-DENER	*	SUR-027-R	+	
90	73	7	7.00E-09	0.94116	/CONT-LEAK	*	FA7	*	FS2	*	LAMBDA-SVGR	*	
91					Q8TG	*	RHRC003B-P-UUM	*	SUR-027-R	+			
92	51	8	6.85E-09	0.94366	CONT-LEAK	*	FA7	*	FS2	*	LAMBDA-SVGR	*	
93					NOFLOW-RHR-B1	*	Q8TG	*	RHRF04BB-VOC-LF	*	SUR-002-L	+	
94	45	8	6.85E-09	0.94616	CONT-LEAK	*	FA7	*	FS2	*	LAMBDA-SVGR	*	
95					NOFLOW-RHR-B1	*	Q8TG	*	RHR301BX-STR	*	SUR-002-L	+	
96	46	7	6.85E-09	0.94867	CONT-LEAK	*	FA7	*	FS2	*	LAMBDA-SVGR	*	
97					Q8TG	*	RHRF03BB-VOC-LF	*	SUR-002-L	+			
98	11	7	6.85E-09	0.95117	CONT-LEAK	*	FA7	*	FS2	*	LAMBDA-SVGR	*	
99					Q8TG	*	RHRF98BX-XOC-LF	*	SUR-002-L	+			
100	12	7	6.85E-09	0.95367	CONT-LEAK	*	FA7	*	FS2	*	LAMBDA-SVGR	*	
101					Q8TG	*	RHRF47BB-VOC-LF	*	SUR-002-L	+			
102	54	7	6.22E-09	0.95595	CONT-LEAK	*	FA7	*	FS2	*	LAMBDA-SVGR	*	
103					Q8TG	*	RHRF31BX-CCC-LF	*	SUR-002-L	+			
104	47	7	6.22E-09	0.95822	C2DGF002-CCC-LF	*	CONT-LEAK	*	FA7	*	FS2	*	
105					LAMBDA-SVGR	*	Q8TG	*	SUR-002-L	+			
106	61	7	5.84E-09	0.96036	/CONT-LEAK	*	FA7	*	FS2	*	LAMBDA-SVGR	*	
107					Q8TG	*	SEVY03CB-FMS-CC	*	SUR-027-R	+			
108	102	7	5.84E-09	0.96249	/CONT-LEAK	*	FA7	*	FS2	*	LAMBDA-SVGR	*	
109					Q8TG	*	RHRB01BB-BOO-CC	*	SUR-027-R	+			
110	110	7	5.84E-09	0.96462	C2DG01P-PMS-CC	*	/CONT-LEAK	*	FA7	*	FS2	*	
111					LAMBDA-SVGR	*	Q8TG	*	SUR-027-R	+			
112	55	7	5.23E-09	0.96654	CONT-LEAK	*	CSCB068X-BCO-LF	*	FA7	*	FS2	*	
113					LAMBDA-SVGR	*	Q8TG	*	SUR-002-L	+			
114	19	7	5.23E-09	0.96845	1EB16212-BCO	*	CONT-LEAK	*	FA7	*	FS2	*	
115					LAMBDA-SVGR	*	Q8TG	*	SUR-002-L	+			
116	4	7	5.23E-09	0.97036	CCB2DG1P-BCO-LF	*	CONT-LEAK	*	FA7	*	FS2	*	
117					LAMBDA-SVGR	*	Q8TG	*	SUR-002-L	+			
118	57	8	4.67E-09	0.97207	CONT-LEAK	*	FA7	*	FS2	*	LAMBDA-SVGR	*	
119					LPCI-MOV-BETA	*	LPCI-MOV-CM1	*	Q8TG	*	SUR-002-L	+	
120	58	8	4.67E-09	0.97377	CONT-LEAK	*	FA7	*	FS2	*	LAMBDA-SVGR	*	
121					LPCI-MOV-BETA	*	LPCI-MOV-CM2	*	Q8TG	*	SUR-002-L	+	
122	31	7	4.48E-09	0.97541	1EB236B-BCO-LF	*	CONT-LEAK	*	FA7	*	FS2	*	
123					LAMBDA-SVGR	*	Q8TG	*	SUR-002-L	+			
124	60	7	4.48E-09	0.97705	1EB212YX-BCO-LF	*	CONT-LEAK	*	FA7	*	FS2	*	
125					LAMBDA-SVGR	*	Q8TG	*	SUR-002-L	+			
126	48	7	4.48E-09	0.97869	1EB36YB-BCO-LF	*	CONT-LEAK	*	FA7	*	FS2	*	
127					LAMBDA-SVGR	*	Q8TG	*	SUR-002-L	+			
128	2	7	4.48E-09	0.98033	1EB2Y22X-BCO	*	CONT-LEAK	*	FA7	*	FS2	*	
129					LAMBDA-SVGR	*	Q8TG	*	SUR-002-L	+			
130	20	7	4.48E-09	0.98196	1EB36Y1X-BCO-LF	*	CONT-LEAK	*	FA7	*	FS2	*	
131					LAMBDA-SVGR	*	Q8TG	*	SUR-002-L	+			

132	35	7	4.48E-09	0.98360	1EB36XB-BCO-LF	*	CONT-LEAK	*	FA7	*	FS2	*
133					LAMBDA-SVGR	*	Q8TG	*	SUR-002-L	+		
134	5	7	4.48E-09	0.98524	CONT-LEAK	*	FA7	*	FS2	*	LAMBDA-SVGR	*
135					Q8TG	*	SEVB001X-BCO-LF	*	SUR-002-L	+		
136	119	7	2.80E-09	0.98627	/CONT-LEAK	*	CSCD300B-PLG-LF	*	FA7	*	FS2	*
137					LAMBDA-SVGR	*	Q8TG	*	SUR-027-R	+		
138	113	7	2.57E-09	0.98720	C2DG01P-PMS-LF	*	/CONT-LEAK	*	FA7	*	FS2	*
139					LAMBDA-SVGR	*	Q8TG	*	SUR-027-R	+		
140	78	7	2.57E-09	0.98814	/CONT-LEAK	*	FA7	*	FS2	*	LAMBDA-SVGR	*
141					Q8TG	*	RHRC02BB-PMS-LF	*	SUR-027-R	+		
142	88	7	1.96E-09	0.98886	/CONT-LEAK	*	FA7	*	FS2	*	LAMBDA-SVGR	*
143					Q8TG	*	SEVY03AX-ACX-LFI	*	SUR-027-R	+		
144	98	7	1.68E-09	0.98947	/CONT-LEAK	*	EE-CSCD300B-PLG	*	FA7	*	FS2	*
145					LAMBDA-SVGR	*	Q8TG	*	SUR-027-R	+		
146	92	7	1.68E-09	0.99009	/CONT-LEAK	*	EE-C2DG01F-PLG	*	FA7	*	FS2	*
147					LAMBDA-SVGR	*	Q8TG	*	SUR-027-R	+		
148	24	8	1.49E-09	0.99063	CONT-LEAK	*	FA7	*	FLOW-RHR-B3	*	FS2	*
149					LAMBDA-SVGR	*	Q8TG	*	RHRB03BX-BCO-LF	*	SUR-002-L	+
150	68	7	1.35E-09	0.99113	C2DG01F-PLG-LF	*	/CONT-LEAK	*	FA7	*	FS2	*
151					LAMBDA-SVGR	*	Q8TG	*	SUR-027-R	+		
152	109	7	1.26E-09	0.99159	/CONT-LEAK	*	FA7	*	FS2	*	LAMBDA-SVGR	*
153					Q8TG	*	SEVY03CB-FMS-LF	*	SUR-027-R	+		
154	63	7	1.17E-09	0.99202	2DG1PK18-ROO-LFO	*	/CONT-LEAK	*	FA7	*	FS2	*
155					LAMBDA-SVGR	*	Q8TG	*	SUR-027-R	+		
156	99	7	1.17E-09	0.99244	/CONT-LEAK	*	CSCF068B-VCC-LF	*	FA7	*	FS2	*
157					LAMBDA-SVGR	*	Q8TG	*	SUR-027-R	+		
158	87	7	1.17E-09	0.99287	/CONT-LEAK	*	FA7	*	FS2	*	LAMBDA-SVGR	*
159					Q8TG	*	SEVY03CB-F-UUM	*	SUR-027-R	+		
160	70	7	1.17E-09	0.99330	/CONT-LEAK	*	FA7	*	FS2	*	LAMBDA-SVGR	*
161					Q8TG	*	RHRB01BB-BOO-LF	*	SUR-027-R	+		
162	69	8	1.17E-09	0.99372	/CONT-LEAK	*	FA7	*	FLOW-RHR-B3	*	FS2	*
163					LAMBDA-SVGR	*	Q8TG	*	RHRF48BB-VOO-LF	*	SUR-027-R	+
164	112	7	7.00E-10	0.99398	2DG01PSC-OOO-LFO	*	/CONT-LEAK	*	FA7	*	FS2	*
165					LAMBDA-SVGR	*	Q8TG	*	SUR-027-R	+		
166	103	7	7.00E-10	0.99424	/CONT-LEAK	*	FA7	*	FS2	*	LAMBDA-SVGR	*
167					Q8TG	*	RHRF51BB-N-UUM	*	SUR-027-R	+		
168	101	7	7.00E-10	0.99449	2DG01PK18CA-LFOO	*	/CONT-LEAK	*	FA7	*	FS2	*
169					LAMBDA-SVGR	*	Q8TG	*	SUR-027-R	+		
170	100	8	7.00E-10	0.99475	/CONT-LEAK	*	FA7	*	FS2	*	LAMBDA-SVGR	*
171					Q8TG	*	RHRF64BB-V-UUM	*	SCSF06BB-DENER	*	SUR-027-R	+
172	96	7	7.00E-10	0.99500	/CONT-LEAK	*	FA7	*	FS2	*	LAMBDA-SVGR	*
173					Q8TG	*	RHRF60BB-S-UUM	*	SUR-027-R	+		
174	94	7	7.00E-10	0.99526	C2DG01F-S-UUM	*	/CONT-LEAK	*	FA7	*	FS2	*
175					LAMBDA-SVGR	*	Q8TG	*	SUR-027-R	+		
176	93	7	7.00E-10	0.99552	/CONT-LEAK	*	FA7	*	FS2	*	LAMBDA-SVGR	*
177					Q8TG	*	RHRF74BB-V-UUM	*	SUR-027-R	+		

178	90	8	7.00E-10	0.99577	/CONT-LEAK	*	FA7	*	FLOW-RHR-B3	*	FS2	*	
179					LAMBDA-SVGR	*	Q8TG	*	RHRF48BB-V-UUM	*	SUR-027-R	+	
180	89	7	7.00E-10	0.99603	/CONT-LEAK	*	CSCD300B-S-UUM	*	FA7	*	FS2	*	
181					LAMBDA-SVGR	*	Q8TG	*	SUR-027-R	+			
182	86	8	7.00E-10	0.99628	/CONT-LEAK	*	FA7	*	FS2	*	LAMBDA-SVGR	*	
183					Q8TG	*	RHRF88BX-R-UUM	*	SCSF06BB-DENER	*	SUR-027-R	+	
184	85	8	7.00E-10	0.99654	/CONT-LEAK	*	FA7	*	FS2	*	LAMBDA-SVGR	*	
185					Q8TG	*	RHRF47BB-V-UUM	*	SCSF06BB-DENER	*	SUR-027-R	+	
186	83	7	7.00E-10	0.99680	/CONT-LEAK	*	FA7	*	FS2	*	LAMBDA-SVGR	*	
187					Q8TG	*	SEVY03AX-A-UUM	*	SUR-027-R	+			
188	82	7	7.00E-10	0.99705	/CONT-LEAK	*	FA7	*	FS2	*	LAMBDA-SVGR	*	
189					Q8TG	*	RHRF55BX-R-UUM	*	SUR-027-R	+			
190	81	7	7.00E-10	0.99731	/CONT-LEAK	*	FA7	*	FS2	*	LAMBDA-SVGR	*	
191					Q8TG	*	RHRF87BB-V-UUM	*	SUR-027-R	+			
192	77	7	7.00E-10	0.99756	/CONT-LEAK	*	CSCF068B-V-UUM	*	FA7	*	FS2	*	
193					LAMBDA-SVGR	*	Q8TG	*	SUR-027-R	+			
194	76	7	7.00E-10	0.99782	/CONT-LEAK	*	FA7	*	FS2	*	LAMBDA-SVGR	*	
195					Q8TG	*	RHRF65BB-N-UUM	*	SUR-027-R	+			
196	75	7	7.00E-10	0.99808	/CONT-LEAK	*	FA7	*	FS2	*	LAMBDA-SVGR	*	
197					Q8TG	*	SCSF06BB-V-UUM	*	SUR-027-R	+			
198	67	7	7.00E-10	0.99833	/CONT-LEAK	*	FA7	*	FS2	*	LAMBDA-SVGR	*	
199					Q8TG	*	RHRH01BX-H-UUM	*	SUR-027-R	+			
200	116	8	6.42E-10	0.99857	/CONT-LEAK	*	FA7	*	FS2	*	LAMBDA-SVGR	*	
201					LPCI-BETA	*	LPCI-PMS-CM	*	Q8TG	*	SUR-027-R	+	
202	111	8	2.57E-10	0.99866	/CONT-LEAK	*	FA7	*	FS2	*	LAMBDA-SVGR	*	
203					NOFLOW-RHR-B1	*	Q8TG	*	RHRF04BB-VOC-LF	*	SUR-027-R	+	
204	106	7	2.57E-10	0.99875	/CONT-LEAK	*	FA7	*	FS2	*	LAMBDA-SVGR	*	
205					Q8TG	*	RHRF03BB-VOC-LF	*	SUR-027-R	+			
206	105	8	2.57E-10	0.99885	/CONT-LEAK	*	FA7	*	FS2	*	LAMBDA-SVGR	*	
207					NOFLOW-RHR-B1	*	Q8TG	*	RHR301BX-STR	*	SUR-027-R	+	
208	72	7	2.57E-10	0.99894	/CONT-LEAK	*	FA7	*	FS2	*	LAMBDA-SVGR	*	
209					Q8TG	*	RHRF47BB-VOC-LF	*	SUR-027-R	+			
210	71	7	2.57E-10	0.99904	/CONT-LEAK	*	FA7	*	FS2	*	LAMBDA-SVGR	*	
211					Q8TG	*	RHRF98BX-XOC-LF	*	SUR-027-R	+			
212	114	7	2.33E-10	0.99912	/CONT-LEAK	*	FA7	*	FS2	*	LAMBDA-SVGR	*	
213					Q8TG	*	RHRF31BX-CCC-LF	*	SUR-027-R	+			
214	107	7	2.33E-10	0.99921	C2DGF002-CCC-LF	*	/CONT-LEAK	*	FA7	*	FS2	*	
215					LAMBDA-SVGR	*	Q8TG	*	SUR-027-R	+			
216	115	7	1.96E-10	0.99928	/CONT-LEAK	*	CSCB068X-BCO-LF	*	FA7	*	FS2	*	
217					LAMBDA-SVGR	*	Q8TG	*	SUR-027-R	+			
218	79	7	1.96E-10	0.99935	1EB16212-BCO	*	/CONT-LEAK	*	FA7	*	FS2	*	
219					LAMBDA-SVGR	*	Q8TG	*	SUR-027-R	+			
220	64	7	1.96E-10	0.99942	CCB2DG1P-BCO-LF	*	/CONT-LEAK	*	FA7	*	FS2	*	
221					LAMBDA-SVGR	*	Q8TG	*	SUR-027-R	+			
222	118	8	1.75E-10	0.99949	/CONT-LEAK	*	FA7	*	FS2	*	LAMBDA-SVGR	*	
223					LPCI-MOV-BETA	*	LPCI-MOV-CM2	*	Q8TG	*	SUR-027-R	+	

224	117	8	1.75E-10	0.99955	/CONT-LEAK	*	FA7	*	FS2	*	LAMBDA-SVGR	*	
225					LPCI-MOV-BETA	*	LPCI-MOV-CM1	*	Q8TG	*	SUR-027-R	+	
226	62	7	1.68E-10	0.99961	1EB2Y22X-BCO	*	/CONT-LEAK	*	FA7	*	FS2	*	
227					LAMBDA-SVGR	*	Q8TG	*	SUR-027-R	+			
228	120	7	1.68E-10	0.99967	1EB212YX-BCO-LF	*	/CONT-LEAK	*	FA7	*	FS2	*	
229					LAMBDA-SVGR	*	Q8TG	*	SUR-027-R	+			
230	108	7	1.68E-10	0.99973	1EB36YB-BCO-LF	*	/CONT-LEAK	*	FA7	*	FS2	*	
231					LAMBDA-SVGR	*	Q8TG	*	SUR-027-R	+			
232	95	7	1.68E-10	0.99980	1EB36XB-BCO-LF	*	/CONT-LEAK	*	FA7	*	FS2	*	
233					LAMBDA-SVGR	*	Q8TG	*	SUR-027-R	+			
234	91	7	1.68E-10	0.99986	1EB236B-BCO-LF	*	/CONT-LEAK	*	FA7	*	FS2	*	
235					LAMBDA-SVGR	*	Q8TG	*	SUR-027-R	+			
236	80	7	1.68E-10	0.99992	1EB36Y1X-BCO-LF	*	/CONT-LEAK	*	FA7	*	FS2	*	
237					LAMBDA-SVGR	*	Q8TG	*	SUR-027-R	+			
238	65	7	1.68E-10	0.99998	/CONT-LEAK	*	FA7	*	FS2	*	LAMBDA-SVGR	*	
239					Q8TG	*	SEVB001X-BCO-LF	*	SUR-027-R	+			
240	84	8	5.60E-11	1.00000	/CONT-LEAK	*	FA7	*	FLOW-RHR-B3	*	FS2	*	
241					LAMBDA-SVGR	*	Q8TG	*	RHRB03BX-BCO-LF	*	SUR-027-R		

TEMAC RUN TIME IN CPU SECONDS 192.70

FIRE-Z SEQUENCE

TOP EVENT FIRE-Z CONTAINS 73 EVENTS IN 120 CUT SETS

THE FREQUENCY OF TOP EVENT FIRE-Z IS 3.19E-08

DESCRIPTIVE STATISTICS FOR THE FREQUENCY OF TOP EVENT FIRE-Z

N	400
MEAN	3.58E-08
STD DEV	1.19E-07
LOWER 5%	0.00E+00
LOWER 25%	0.00E+00
MEDIAN	0.00E+00
UPPER 25%	9.04E-09
UPPER 5%	2.03E-07

90% UNCERTAINTY INTERVAL FOR TOP EVENT FREQUENCY (INNERMOST BRACKETS DENOTE INTERQUARTILE RANGE, ASTERISK DENOTES MEDIAN, N DENOTES NOMINAL VALUE AND M DENOTES MEAN)

NOMENCLATURE:

PD = PARTIAL DERIVATIVE

TEF = FREQUENCY OF THE TOP EVENT

EV(J) = PROBABILITY OF EVENT J FOR BASE EVENTS
= FREQUENCY OF EVENT J FOR INITIATING EVENTS

MEASURES:

1. FOR BASE EVENTS AND INITIATING EVENTS:

RISK REDUCTION = PD x EV(J)
= TEF - TEF(EVALUATED WITH EV(J) = 0)

2. FOR BASE EVENTS ONLY:

RISK INCREASE = PD - RISK REDUCTION
= PD x (1 - EV(J))
= TEF(EVALUATED WITH EV(J) = 1) - TEF

FIRE-Z SEQUENCE
RISK REDUCTION BY BASE EVENT (WITH ASSOCIATED UNCERTAINTY INTERVALS)

BASE EVENT	OCCUR	PROB	(RANK)	RISK REDUCTION	(RANK)	LOWER 5%	UPPER 5%
FA8	120	5.00E-03	(14.0)	3.19E-08	(3.0)	0.00E+00	2.03E-07
FS2	120	3.00E-01	(6.0)	3.19E-08	(3.0)	0.00E+00	2.03E-07
Q9TG	120	9.10E-01	(4.0)	3.19E-08	(3.0)	0.00E+00	2.03E-07
LAMBDA-AUX	120	5.40E-02	(10.0)	3.19E-08	(3.0)	0.00E+00	2.03E-07
FAZ	120	8.20E-02	(9.0)	3.19E-08	(3.0)	0.00E+00	2.03E-07
SUR-002-L	60	1.60E-01	(7.0)	3.07E-08	(6.0)	0.00E+00	2.03E-07
CONT-LEAK	120	7.50E-01	(5.0)	2.73E-08	(7.0)	0.00E+00	2.03E-07
RHRH01BX-HTX-LFB	2	6.20E-03	(13.0)	4.67E-09	(8.0)	0.00E+00	3.02E-08
SCSF06BB-DENER	8	1.00E+00	(2.0)	2.93E-09	(9.0)		
C2DG01P-P-UUM	2	3.00E-03	(16.5)	2.26E-09	(11.5)	0.00E+00	9.06E-09
RHRC02BB-P-NDUUM	2	3.00E-03	(16.5)	2.26E-09	(11.5)	0.00E+00	9.06E-09
RHRC003B-P-UUM	2	3.00E-03	(16.5)	2.26E-09	(11.5)	0.00E+00	8.32E-09
RHRC02BB-P-UUM	2	3.00E-03	(16.5)	2.26E-09	(11.5)	0.00E+00	8.32E-09
RHRB01BB-BOO-CC	2	2.50E-03	(21.5)	1.88E-09	(15.0)	0.00E+00	8.40E-09
C2DG01P-PMS-CC	2	2.50E-03	(21.5)	1.88E-09	(15.0)	0.00E+00	8.40E-09
SEVY03CB-FMS-CC	2	2.50E-03	(21.5)	1.88E-09	(15.0)	0.00E+00	8.40E-09
SUR-027-R	60	1.80E-02	(12.0)	1.15E-09	(17.0)	0.00E+00	1.49E-08
CSCD300B-PLG-LF	2	1.20E-03	(25.0)	9.03E-10	(18.0)	0.00E+00	4.58E-09
RHRC02BB-PMS-LF	2	1.10E-03	(26.5)	8.28E-10	(19.5)	0.00E+00	3.84E-09
C2DG01P-PMS-LF	2	1.10E-03	(26.5)	8.28E-10	(19.5)	0.00E+00	3.84E-09
SEVY03AX-ACX-LFI	2	8.40E-04	(28.0)	6.32E-10	(21.0)	0.00E+00	2.79E-09
FLOW-RHR-B3	6	1.00E+00	(2.0)	6.20E-10	(22.0)		
EE-C2DG01F-PLG	2	7.20E-04	(29.5)	5.42E-10	(23.5)	0.00E+00	2.74E-09
EE-CSCD300B-PLG	2	7.20E-04	(29.5)	5.42E-10	(23.5)	0.00E+00	2.74E-09
C2DG01F-PLG-LF	2	5.80E-04	(31.0)	4.36E-10	(25.0)	0.00E+00	2.28E-09
SEVY03CB-FMS-LF	2	5.40E-04	(32.0)	4.06E-10	(26.0)	0.00E+00	2.58E-09
RHRF48BB-VOO-LF	2	5.00E-04	(35.0)	3.76E-10	(29.0)	0.00E+00	1.68E-09
CSCF068B-VCC-LF	2	5.00E-04	(35.0)	3.76E-10	(29.0)	0.00E+00	1.68E-09
RHRB01BB-BOO-LF	2	5.00E-04	(35.0)	3.76E-10	(29.0)	0.00E+00	1.63E-09
2DG1FK18-ROO-LFO	2	5.00E-04	(35.0)	3.76E-10	(29.0)	0.00E+00	1.17E-09
SEVY03CB-F-UUM	2	5.00E-04	(35.0)	3.76E-10	(29.0)	0.00E+00	2.89E-09
RHRH01BX-H-UUM	2	3.00E-04	(46.5)	2.26E-10	(40.5)	0.00E+00	7.13E-10
RHRF88BX-R-UUM	2	3.00E-04	(46.5)	2.26E-10	(40.5)	0.00E+00	8.21E-10
RHRF74BB-V-UUM	2	3.00E-04	(46.5)	2.26E-10	(40.5)	0.00E+00	8.21E-10
RHRF65BB-N-UUM	2	3.00E-04	(46.5)	2.26E-10	(40.5)	0.00E+00	8.21E-10
RHRF64BB-V-UUM	2	3.00E-04	(46.5)	2.26E-10	(40.5)	0.00E+00	8.21E-10
RHRF60BB-S-UUM	2	3.00E-04	(46.5)	2.26E-10	(40.5)	0.00E+00	8.21E-10
RHRF55BX-R-UUM	2	3.00E-04	(46.5)	2.26E-10	(40.5)	0.00E+00	8.21E-10
RHRF51BB-N-UUM	2	3.00E-04	(46.5)	2.26E-10	(40.5)	0.00E+00	8.21E-10
RHRF48BB-V-UUM	2	3.00E-04	(46.5)	2.26E-10	(40.5)	0.00E+00	8.21E-10

RHRF47BB-V-UUM	2	3.00E-04	(46.5)	2.26E-10	(40.5)	0.00E+00	8.21E-10
C2DG01F-S-UUM	2	3.00E-04	(46.5)	2.26E-10	(40.5)	0.00E+00	7.13E-10
SEVY03AX-A-UUM	2	3.00E-04	(46.5)	2.26E-10	(40.5)	0.00E+00	7.13E-10
CSCF068B-V-UUM	2	3.00E-04	(46.5)	2.26E-10	(40.5)	0.00E+00	8.21E-10
RHRF87BB-V-UUM	2	3.00E-04	(46.5)	2.26E-10	(40.5)	0.00E+00	8.21E-10
CSCD300B-S-UUM	2	3.00E-04	(46.5)	2.26E-10	(40.5)	0.00E+00	7.13E-10
2DG01PSC-OOO-LFO	2	3.00E-04	(46.5)	2.26E-10	(40.5)	0.00E+00	1.11E-09
2DG01PK18CA-LFOO	2	3.00E-04	(46.5)	2.26E-10	(40.5)	0.00E+00	1.11E-09
SCSF06BB-V-UUM	2	3.00E-04	(46.5)	2.26E-10	(40.5)	0.00E+00	8.21E-10
LPCI-PMS-CM	2	2.50E-03	(21.5)	2.07E-10	(50.5)	0.00E+00	8.31E-10
LPCI-BETA	2	1.10E-01	(8.0)	2.07E-10	(50.5)	0.00E+00	8.31E-10
NOFLOW-RHR-B1	4	1.00E+00	(2.0)	1.66E-10	(52.0)		
LPCI-MOV-BETA	4	3.00E-02	(11.0)	1.13E-10	(53.0)	0.00E+00	4.70E-10
RHRF98BX-XOC-LF	2	1.10E-04	(58.0)	8.28E-11	(56.0)	0.00E+00	5.72E-10
RHRF47BB-VOC-LF	2	1.10E-04	(58.0)	8.28E-11	(56.0)	0.00E+00	5.72E-10
RHRF04BB-VOC-LF	2	1.10E-04	(58.0)	8.28E-11	(56.0)	0.00E+00	5.72E-10
RHRF03BB-VOC-LF	2	1.10E-04	(58.0)	8.28E-11	(56.0)	0.00E+00	5.72E-10
RHR301BX-STR	2	1.10E-04	(58.0)	8.28E-11	(56.0)	0.00E+00	3.54E-10
RHRF31BX-CCC-LF	2	1.00E-04	(61.5)	7.53E-11	(59.5)	0.00E+00	5.96E-10
C2DGF002-CCC-LF	2	1.00E-04	(61.5)	7.53E-11	(59.5)	0.00E+00	5.96E-10
CSCB068X-BCO-LF	2	8.40E-05	(64.0)	6.32E-11	(62.0)	0.00E+00	1.86E-10
CCB2DG1P-BCO-LF	2	8.40E-05	(64.0)	6.32E-11	(62.0)	0.00E+00	1.86E-10
1EB16212-BCO	2	8.40E-05	(64.0)	6.32E-11	(62.0)	0.00E+00	1.86E-10
LPCI-MOV-CM2	2	2.50E-03	(21.5)	5.64E-11	(64.5)	0.00E+00	2.35E-10
LPCI-MOV-CM1	2	2.50E-03	(21.5)	5.64E-11	(64.5)	0.00E+00	2.35E-10
1EB36YB-BCO-LF	2	7.20E-05	(69.0)	5.42E-11	(69.0)	0.00E+00	1.58E-10
1EB36Y1X-BCO-LF	2	7.20E-05	(69.0)	5.42E-11	(69.0)	0.00E+00	1.58E-10
1EB236B-BCO-LF	2	7.20E-05	(69.0)	5.42E-11	(69.0)	0.00E+00	1.58E-10
1EB36XB-BCO-LF	2	7.20E-05	(69.0)	5.42E-11	(69.0)	0.00E+00	1.58E-10
1EB212YX-BCO-LF	2	7.20E-05	(69.0)	5.42E-11	(69.0)	0.00E+00	1.58E-10
SEVB001X-BCO-LF	2	7.20E-05	(69.0)	5.42E-11	(69.0)	0.00E+00	1.58E-10
1EB2Y22X-BCO	2	7.20E-05	(69.0)	5.42E-11	(69.0)	0.00E+00	1.58E-10
RHRB03BX-BCO-LF	2	2.40E-05	(73.0)	1.81E-11	(73.0)	0.00E+00	6.07E-11

FIRE-Z SEQUENCE
RISK INCREASE BY BASE EVENT (WITH ASSOCIATED UNCERTAINTY INTERVALS)

BASE EVENT	OCCUR	PROB	(RANK)	RISK INCREASE	(RANK)	LOWER 5%	UPPER 5%
FA8	120	5.00E-03	(14.0)	6.34E-06	(1.0)	0.00E+00	4.34E-05
RHRB03BX-BCO-LF	2	2.40E-05	(73.0)	7.52E-07	(2.0)	0.00E+00	5.80E-06
1EB36YB-BCO-LF	2	7.20E-05	(69.0)	7.52E-07	(6.0)	0.00E+00	5.80E-06
1EB36Y1X-BCO-LF	2	7.20E-05	(69.0)	7.52E-07	(6.0)	0.00E+00	5.80E-06
1EB2Y22X-BCO	2	7.20E-05	(69.0)	7.52E-07	(6.0)	0.00E+00	5.80E-06
1EB236B-BCO-LF	2	7.20E-05	(69.0)	7.52E-07	(6.0)	0.00E+00	5.80E-06
1EB36XB-BCO-LF	2	7.20E-05	(69.0)	7.52E-07	(6.0)	0.00E+00	5.80E-06
1EB212YX-BCO-LF	2	7.20E-05	(69.0)	7.52E-07	(6.0)	0.00E+00	5.80E-06
SEVB001X-BCO-LF	2	7.20E-05	(69.0)	7.52E-07	(6.0)	0.00E+00	5.80E-06
CSCB068X-BCO-LF	2	8.40E-05	(64.0)	7.52E-07	(11.0)	0.00E+00	5.80E-06
CCB2DG1P-BCO-LF	2	8.40E-05	(64.0)	7.52E-07	(11.0)	0.00E+00	5.80E-06
1EB16212-BCO	2	8.40E-05	(64.0)	7.52E-07	(11.0)	0.00E+00	5.80E-06
RHRF31BX-CCC-LF	2	1.00E-04	(61.5)	7.52E-07	(16.0)	0.00E+00	5.80E-06
C2DGF002-CCC-LF	2	1.00E-04	(61.5)	7.52E-07	(16.0)	0.00E+00	5.80E-06
RHRF04BB-VOC-LF	2	1.10E-04	(58.0)	7.52E-07	(16.0)	0.00E+00	5.80E-06
RHRF03BB-VOC-LF	2	1.10E-04	(58.0)	7.52E-07	(16.0)	0.00E+00	5.80E-06
RHR301BX-STR	2	1.10E-04	(58.0)	7.52E-07	(16.0)	0.00E+00	5.80E-06
RHRF47BB-VOC-LF	2	1.10E-04	(58.0)	7.52E-07	(16.0)	0.00E+00	5.80E-06
RHRF98BX-XOC-LF	2	1.10E-04	(58.0)	7.52E-07	(16.0)	0.00E+00	5.80E-06
RHRF60BB-S-UUM	2	3.00E-04	(46.5)	7.52E-07	(28.5)	0.00E+00	5.80E-06
RHRF65BB-N-UUM	2	3.00E-04	(46.5)	7.52E-07	(28.5)	0.00E+00	5.80E-06
RHRF64BB-V-UUM	2	3.00E-04	(46.5)	7.52E-07	(28.5)	0.00E+00	5.80E-06
RHRF51BB-N-UUM	2	3.00E-04	(46.5)	7.52E-07	(28.5)	0.00E+00	5.80E-06
RHRF87BB-V-UUM	2	3.00E-04	(46.5)	7.52E-07	(28.5)	0.00E+00	5.80E-06
C2DG01F-S-UUM	2	3.00E-04	(46.5)	7.52E-07	(28.5)	0.00E+00	5.80E-06
RHRF55BX-R-UUM	2	3.00E-04	(46.5)	7.52E-07	(28.5)	0.00E+00	5.80E-06
RHRF47BB-V-UUM	2	3.00E-04	(46.5)	7.52E-07	(28.5)	0.00E+00	5.80E-06
RHRF74BB-V-UUM	2	3.00E-04	(46.5)	7.52E-07	(28.5)	0.00E+00	5.80E-06
RHRF88BX-R-UUM	2	3.00E-04	(46.5)	7.52E-07	(28.5)	0.00E+00	5.80E-06
RHRF48BB-V-UUM	2	3.00E-04	(46.5)	7.52E-07	(28.5)	0.00E+00	5.80E-06
CSCF068B-V-UUM	2	3.00E-04	(46.5)	7.52E-07	(28.5)	0.00E+00	5.80E-06
CSCD300B-S-UUM	2	3.00E-04	(46.5)	7.52E-07	(28.5)	0.00E+00	5.80E-06
RHRH01BX-H-UUM	2	3.00E-04	(46.5)	7.52E-07	(28.5)	0.00E+00	5.80E-06
2DG01PSC-OOO-LFO	2	3.00E-04	(46.5)	7.52E-07	(28.5)	0.00E+00	5.80E-06
SEVY03AX-A-UUM	2	3.00E-04	(46.5)	7.52E-07	(28.5)	0.00E+00	5.80E-06
SCSF06BB-V-UUM	2	3.00E-04	(46.5)	7.52E-07	(28.5)	0.00E+00	5.80E-06
2DG01PK18CA-LFOO	2	3.00E-04	(46.5)	7.52E-07	(28.5)	0.00E+00	5.80E-06
RHRF48BB-VOO-LF	2	5.00E-04	(35.0)	7.52E-07	(40.0)	0.00E+00	5.80E-06
CSCF068B-VCC-LF	2	5.00E-04	(35.0)	7.52E-07	(40.0)	0.00E+00	5.80E-06
2DG1PK18-ROO-LFO	2	5.00E-04	(35.0)	7.52E-07	(40.0)	0.00E+00	5.80E-06

RHRB01BB-BOO-LF	2	5.00E-04	(35.0)	7.52E-07	(40.0)	0.00E+00	5.79E-06
SEVY03CB-F-UUM	2	5.00E-04	(35.0)	7.52E-07	(40.0)	0.00E+00	5.80E-06
SEVY03CB-FMS-LF	2	5.40E-04	(32.0)	7.52E-07	(43.0)	0.00E+00	5.80E-06
C2DG01F-PLG-LF	2	5.80E-04	(31.0)	7.52E-07	(44.0)	0.00E+00	5.80E-06
EE-CSCD300B-PLG	2	7.20E-04	(29.5)	7.52E-07	(45.5)	0.00E+00	5.80E-06
EE-C2DG01F-PLG	2	7.20E-04	(29.5)	7.52E-07	(45.5)	0.00E+00	5.80E-06
SEVY03AX-ACX-LFI	2	8.40E-04	(28.0)	7.52E-07	(47.0)	0.00E+00	5.80E-06
C2DG01P-PMS-LF	2	1.10E-03	(26.5)	7.52E-07	(48.5)	0.00E+00	5.80E-06
RHRC02BB-PMS-LF	2	1.10E-03	(26.5)	7.52E-07	(48.5)	0.00E+00	5.80E-06
CSCD300B-PLG-LF	2	1.20E-03	(25.0)	7.52E-07	(50.0)	0.00E+00	5.80E-06
C2DG01P-PMS-CC	2	2.50E-03	(21.5)	7.51E-07	(52.0)	0.00E+00	5.79E-06
RHRB01BB-BOO-CC	2	2.50E-03	(21.5)	7.51E-07	(52.0)	0.00E+00	5.79E-06
SEVY03CB-FMS-CC	2	2.50E-03	(21.5)	7.51E-07	(52.0)	0.00E+00	5.79E-06
C2DG01P-P-UUM	2	3.00E-03	(16.5)	7.50E-07	(55.5)	0.00E+00	5.79E-06
RHRC02BB-P-UUM	2	3.00E-03	(16.5)	7.50E-07	(55.5)	0.00E+00	5.80E-06
RHRC02BB-P-NDUUM	2	3.00E-03	(16.5)	7.50E-07	(55.5)	0.00E+00	5.79E-06
RHRC003B-P-UUM	2	3.00E-03	(16.5)	7.50E-07	(55.5)	0.00E+00	5.80E-06
RHRH01BX-HTX-LFB	2	6.20E-03	(13.0)	7.48E-07	(58.0)	0.00E+00	5.78E-06
LAMBDA-AUX	120	5.40E-02	(10.0)	5.58E-07	(59.0)	0.00E+00	3.31E-06
FAZ	120	8.20E-02	(9.0)	3.57E-07	(60.0)	0.00E+00	2.98E-06
SUR-002-L	60	1.60E-01	(7.0)	1.61E-07	(61.0)	0.00E+00	5.93E-07
LPCI-PMS-CM	2	2.50E-03	(21.5)	8.26E-08	(62.0)	0.00E+00	4.75E-07
FS2	120	3.00E-01	(6.0)	7.44E-08	(63.0)	0.00E+00	5.06E-07
SUR-027-R	60	1.80E-02	(12.0)	6.28E-08	(64.0)	0.00E+00	2.76E-07
LPCI-MOV-CM2	2	2.50E-03	(21.5)	2.25E-08	(65.5)	0.00E+00	1.52E-07
LPCI-MOV-CM1	2	2.50E-03	(21.5)	2.25E-08	(65.5)	0.00E+00	1.52E-07
CONT-LEAK	120	7.50E-01	(5.0)	9.09E-09	(67.0)	-1.49E-08	0.00E+00
LPCI-MOV-BETA	4	3.00E-02	(11.0)	3.65E-09	(68.0)	0.00E+00	1.65E-08
Q9TG	120	9.10E-01	(4.0)	3.15E-09	(69.0)	0.00E+00	1.33E-08
LPCI-BETA	2	1.10E-01	(8.0)	1.67E-09	(70.0)	0.00E+00	7.72E-09
FLOW-RHR-B3	6	1.00E+00	(2.0)	0.00E+00	(72.0)		
NOFLOW-RHR-B1	4	1.00E+00	(2.0)	0.00E+00	(72.0)		
SCSF06BB-DENER	8	1.00E+00	(2.0)	0.00E+00	(72.0)		

FIRE-Z SEQUENCE
UNCERTAINTY IMPORTANCE BY BASE EVENT

BASE EVENT	OCCUR	PROB	(RANK)	% REDUCTION IN THE UNCERTAINTY OF LOG RISK	(RANK)	Y.05/TE.05*	Y.95/TE.95*
SUR-002-L	60	1.60E-01	(7.0)	60.9	(1.0)	NA	0.58
SUR-027-R	60	1.80E-02	(12.0)	11.6	(2.0)	NA	1.00
CONT-LEAK	120	7.50E-01	(5.0)	5.6	(3.0)	NA	0.75
LAMBDA-AUX	120	5.40E-02	(10.0)	5.0	(4.0)	NA	0.93
RHRH01BX-HTX-LFB	2	6.20E-03	(13.0)	3.1	(5.0)	NA	1.04
EE-C2DG01F-PLG	2	7.20E-04	(29.5)	2.3	(6.5)	NA	1.01
EE-CSCD300B-PLG	2	7.20E-04	(29.5)	2.3	(6.5)	NA	1.01
C2DG01P-P-UUM	2	3.00E-03	(16.5)	2.2	(8.5)	NA	1.05
RHRC02BB-P-NDUUM	2	3.00E-03	(16.5)	2.2	(8.5)	NA	1.05
SEVY03AX-ACX-LFI	2	8.40E-04	(28.0)	1.9	(10.0)	NA	0.99
RHRF65BB-N-UUM	2	3.00E-04	(46.5)	1.7	(16.5)	NA	1.09
RHRF48BB-V-UUM	2	3.00E-04	(46.5)	1.7	(16.5)	NA	1.09
RHRF74BB-V-UUM	2	3.00E-04	(46.5)	1.7	(16.5)	NA	1.09
RHRF47BB-V-UUM	2	3.00E-04	(46.5)	1.7	(16.5)	NA	1.09
RHRF51BB-N-UUM	2	3.00E-04	(46.5)	1.7	(16.5)	NA	1.09
RHRF64BB-V-UUM	2	3.00E-04	(46.5)	1.7	(16.5)	NA	1.09
RHRF87BB-V-UUM	2	3.00E-04	(46.5)	1.7	(16.5)	NA	1.09
RHRF60BB-S-UUM	2	3.00E-04	(46.5)	1.7	(16.5)	NA	1.09
SCSF06BB-V-UUM	2	3.00E-04	(46.5)	1.7	(16.5)	NA	1.09
RHRF88BX-R-UUM	2	3.00E-04	(46.5)	1.7	(16.5)	NA	1.09
RHRF55BX-R-UUM	2	3.00E-04	(46.5)	1.7	(16.5)	NA	1.09
CSCF068B-V-UUM	2	3.00E-04	(46.5)	1.7	(16.5)	NA	1.09
FAZ	120	8.20E-02	(9.0)	1.6	(23.0)	NA	1.30
CSCD300B-PLG-LF	2	1.20E-03	(25.0)	1.5	(24.0)	NA	1.01
RHRF48BB-VOO-LF	2	5.00E-04	(35.0)	1.5	(25.5)	NA	1.01
CSCF068B-VCC-LF	2	5.00E-04	(35.0)	1.5	(25.5)	NA	1.01
C2DG01F-PLG-LF	2	5.80E-04	(31.0)	1.5	(27.0)	NA	1.00
LPCI-MOV-BETA	4	3.00E-02	(11.0)	1.3	(28.0)	NA	0.99
RHRF31BX-CCC-LF	2	1.00E-04	(61.5)	1.3	(29.5)	NA	1.00
C2DGF002-CCC-LF	2	1.00E-04	(61.5)	1.3	(29.5)	NA	1.00
2DG01PK18CA-LFOO	2	3.00E-04	(46.5)	1.1	(31.5)	NA	0.98
2DG01PSC-OOO-LFO	2	3.00E-04	(46.5)	1.1	(31.5)	NA	0.98
FS2	120	3.00E-01	(6.0)	1.0	(33.0)	NA	1.13
FA8	120	5.00E-03	(14.0)	1.0	(34.0)	NA	1.07
RHRB03BX-BCO-LF	2	2.40E-05	(73.0)	1.0	(35.0)	NA	1.00
C2DG01P-PMS-CC	2	2.50E-03	(21.5)	0.8	(38.5)	NA	1.00
RHRB01BB-BOO-CC	2	2.50E-03	(21.5)	0.8	(38.5)	NA	1.00
LPCI-PMS-CM	2	2.50E-03	(21.5)	0.8	(38.5)	NA	1.00
SEVY03CB-FMS-CC	2	2.50E-03	(21.5)	0.8	(38.5)	NA	1.00
LPCI-MOV-CM1	2	2.50E-03	(21.5)	0.8	(38.5)	NA	1.00

LPCI-MOV-CM2	2	2.50E-03 (21.5)	0.8	(38.5)	NA	1.00
CSCB068X-BCO-LF	2	8.40E-05 (64.0)	0.7	(43.0)	NA	1.00
CCB2DG1P-BCO-LF	2	8.40E-05 (64.0)	0.7	(43.0)	NA	1.00
1EB16212-BCO	2	8.40E-05 (64.0)	0.7	(43.0)	NA	1.00
LPCI-BETA	2	1.10E-01 (8.0)	0.0	(57.5)		
RHRF98BX-XOC-LF	2	1.10E-04 (58.0)	0.0	(57.5)		
C2DG01P-PMS-LF	2	1.10E-03 (26.5)	0.0	(57.5)		
1EB36YB-BCO-LF	2	7.20E-05 (69.0)	0.0	(57.5)		
1EB236B-BCO-LF	2	7.20E-05 (69.0)	0.0	(57.5)		
RHRF47BB-VOC-LF	2	1.10E-04 (58.0)	0.0	(57.5)		
C2DG01F-S-UUM	2	3.00E-04 (46.5)	0.0	(57.5)		
1EB36Y1X-BCO-LF	2	7.20E-05 (69.0)	0.0	(57.5)		
RHRF04BB-VOC-LF	2	1.10E-04 (58.0)	0.0	(57.5)		
RHRF03BB-VOC-LF	2	1.10E-04 (58.0)	0.0	(57.5)		
RHRC02BB-PMS-LF	2	1.10E-03 (26.5)	0.0	(57.5)		
RHRC02BB-P-UUM	2	3.00E-03 (16.5)	0.0	(57.5)		
RHRC003B-P-UUM	2	3.00E-03 (16.5)	0.0	(57.5)		
CSCD300B-S-UUM	2	3.00E-04 (46.5)	0.0	(57.5)		
RHRB01BB-BOO-LF	2	5.00E-04 (35.0)	0.0	(57.5)		
2DG1PK18-ROO-LFO	2	5.00E-04 (35.0)	0.0	(57.5)		
RHRH01BX-H-UUM	2	3.00E-04 (46.5)	0.0	(57.5)		
1EB36XB-BCO-LF	2	7.20E-05 (69.0)	0.0	(57.5)		
RHR301BX-STR	2	1.10E-04 (58.0)	0.0	(57.5)		
Q9TG	120	9.10E-01 (4.0)	0.0	(57.5)		
1EB212YX-BCO-LF	2	7.20E-05 (69.0)	0.0	(57.5)		
SEVY03CB-FMS-LF	2	5.40E-04 (32.0)	0.0	(57.5)		
SEVY03CB-F-UUM	2	5.00E-04 (35.0)	0.0	(57.5)		
SEVY03AX-A-UUM	2	3.00E-04 (46.5)	0.0	(57.5)		
SEVB001X-BCO-LF	2	7.20E-05 (69.0)	0.0	(57.5)		
1EB2Y22X-BCO	2	7.20E-05 (69.0)	0.0	(57.5)		
FLOW-RHR-B3	6	1.00E+00 (2.0)				
NOFLOW-RHR-B1	4	1.00E+00 (2.0)				
SCSF06BB-DENER	8	1.00E+00 (2.0)				

FIRE-Z SEQUENCE

CUT SET NUMBERS, CUT SET ORDERS, CUT SET FREQUENCIES,
CUMULATIVE NORMALIZED CUT SET FREQUENCIES AND CUT SETS
FOR TOP EVENT FIRE-Z WITH TOP EVENT FREQUENCY 3.19E-08

(THE FIRST COLUMN OF NUMBERS IS THE LINE NUMBERS FOR THE FILE TEMACSETS.DNF)

2	12	8	4.50E-09	0.14109	CONT-LEAK	*	FA8	*	FAZ	*	FS2	*
3					LAMBDA-AUX	*	Q9TG	*	RHRH01BX-HTX-LFB	*	SUR-002-L	+
4	54	8	2.18E-09	0.20936	C2DG01P-P-UUM	*	CONT-LEAK	*	FA8	*	FAZ	*
5					FS2	*	LAMBDA-AUX	*	Q9TG	*	SUR-002-L	+
6	57	9	2.18E-09	0.27763	CONT-LEAK	*	FA8	*	FAZ	*	FS2	*
7					LAMBDA-AUX	*	Q9TG	*	RHRC02BB-P-UUM	*	SCSF06BB-DENER	*
8					SUR-002-L	+						
9	31	8	2.18E-09	0.34590	CONT-LEAK	*	FA8	*	FAZ	*	FS2	*
10					LAMBDA-AUX	*	Q9TG	*	RHRC003B-P-UUM	*	SUR-002-L	+
11	6	8	2.18E-09	0.41417	CONT-LEAK	*	FA8	*	FAZ	*	FS2	*
12					LAMBDA-AUX	*	Q9TG	*	RHRC02BB-P-NDUUM	*	SUR-002-L	+
13	22	8	1.81E-09	0.47106	CONT-LEAK	*	FA8	*	FAZ	*	FS2	*
14					LAMBDA-AUX	*	Q9TG	*	RHRB01BB-BOO-CC	*	SUR-002-L	+
15	46	8	1.81E-09	0.52795	CONT-LEAK	*	FA8	*	FAZ	*	FS2	*
16					LAMBDA-AUX	*	Q9TG	*	SEVY03CB-FMS-CC	*	SUR-002-L	+
17	11	8	1.81E-09	0.58484	C2DG01P-PMS-CC	*	CONT-LEAK	*	FA8	*	FAZ	*
18					FS2	*	LAMBDA-AUX	*	Q9TG	*	SUR-002-L	+
19	56	8	8.70E-10	0.61215	CONT-LEAK	*	CSCD300B-PLG-LF	*	FA8	*	FAZ	*
20					FS2	*	LAMBDA-AUX	*	Q9TG	*	SUR-002-L	+
21	32	8	7.98E-10	0.63718	CONT-LEAK	*	FA8	*	FAZ	*	FS2	*
22					LAMBDA-AUX	*	Q9TG	*	RHRC02BB-PMS-LF	*	SUR-002-L	+
23	33	8	7.98E-10	0.66222	C2DG01P-PMS-LF	*	CONT-LEAK	*	FA8	*	FAZ	*
24					FS2	*	LAMBDA-AUX	*	Q9TG	*	SUR-002-L	+
25	27	8	6.09E-10	0.68133	CONT-LEAK	*	FA8	*	FAZ	*	FS2	*
26					LAMBDA-AUX	*	Q9TG	*	SEVY03AX-ACX-LFI	*	SUR-002-L	+
27	50	8	5.22E-10	0.69772	CONT-LEAK	*	EE-CSCD300B-PLG	*	FA8	*	FAZ	*
28					FS2	*	LAMBDA-AUX	*	Q9TG	*	SUR-002-L	+
29	10	8	5.22E-10	0.71410	CONT-LEAK	*	EE-C2DG01F-PLG	*	FA8	*	FAZ	*
30					FS2	*	LAMBDA-AUX	*	Q9TG	*	SUR-002-L	+
31	42	8	4.21E-10	0.72730	C2DG01F-PLG-LF	*	CONT-LEAK	*	FA8	*	FAZ	*
32					FS2	*	LAMBDA-AUX	*	Q9TG	*	SUR-002-L	+
33	23	8	3.92E-10	0.73959	CONT-LEAK	*	FA8	*	FAZ	*	FS2	*
34					LAMBDA-AUX	*	Q9TG	*	SEVY03CB-FMS-LF	*	SUR-002-L	+
35	49	8	3.63E-10	0.75097	CONT-LEAK	*	FA8	*	FAZ	*	FS2	*
36					LAMBDA-AUX	*	Q9TG	*	SEVY03CB-F-UUM	*	SUR-002-L	+
37	1	9	3.63E-10	0.76235	CONT-LEAK	*	FA8	*	FAZ	*	FLOW-RHR-B3	*
38					FS2	*	LAMBDA-AUX	*	Q9TG	*	RHRF48BB-VOO-LF	*
39					SUR-002-L	+						

40	9	8	3.63E-10	0.77372	CONT-LEAK	*	CSCF068B-VCC-LF	*	FA8	*	FAZ	*
41					FS2	*	LAMBDA-AUX	*	Q9TG	*	SUR-002-L	+
42	59	8	3.63E-10	0.78510	2DG1PK18-ROO-LFO	*	CONT-LEAK	*	FA8	*	FAZ	*
43					FS2	*	LAMBDA-AUX	*	Q9TG	*	SUR-002-L	+
44	15	8	3.63E-10	0.79648	CONT-LEAK	*	FA8	*	FAZ	*	FS2	*
45					LAMBDA-AUX	*	Q9TG	*	RHRB01BB-BOO-LF	*	SUR-002-L	+
46	30	9	2.18E-10	0.80331	CONT-LEAK	*	FA8	*	FAZ	*	FS2	*
47					LAMBDA-AUX	*	Q9TG	*	RHRF88BX-R-UUM	*	SCSF06BB-DENER	*
48					SUR-002-L	+						
49	14	8	2.18E-10	0.81013	CONT-LEAK	*	FA8	*	FAZ	*	FS2	*
50					LAMBDA-AUX	*	Q9TG	*	RHRF60BB-S-UUM	*	SUR-002-L	+
51	60	8	2.18E-10	0.81696	CONT-LEAK	*	FA8	*	FAZ	*	FS2	*
52					LAMBDA-AUX	*	Q9TG	*	RHRF55BX-R-UUM	*	SUR-002-L	+
53	45	8	2.18E-10	0.82379	CONT-LEAK	*	FA8	*	FAZ	*	FS2	*
54					LAMBDA-AUX	*	Q9TG	*	RHRH01BX-H-UUM	*	SUR-002-L	+
55	48	8	2.18E-10	0.83062	CONT-LEAK	*	FA8	*	FAZ	*	FS2	*
56					LAMBDA-AUX	*	Q9TG	*	RHRF74BB-V-UUM	*	SUR-002-L	+
57	28	8	2.18E-10	0.83744	CONT-LEAK	*	FA8	*	FAZ	*	FS2	*
58					LAMBDA-AUX	*	Q9TG	*	RHRF51BB-N-UUM	*	SUR-002-L	+
59	58	9	2.18E-10	0.84427	CONT-LEAK	*	FA8	*	FAZ	*	FS2	*
60					LAMBDA-AUX	*	Q9TG	*	RHRF64BB-V-UUM	*	SCSF06BB-DENER	*
61					SUR-002-L	+						
62	17	8	2.18E-10	0.85110	CONT-LEAK	*	FA8	*	FAZ	*	FS2	*
63					LAMBDA-AUX	*	Q9TG	*	SCSF06BB-V-UUM	*	SUR-002-L	+
64	26	8	2.18E-10	0.85792	CONT-LEAK	*	FA8	*	FAZ	*	FS2	*
65					LAMBDA-AUX	*	Q9TG	*	RHRF87BB-V-UUM	*	SUR-002-L	+
66	18	8	2.18E-10	0.86475	CONT-LEAK	*	FA8	*	FAZ	*	FS2	*
67					LAMBDA-AUX	*	Q9TG	*	SEVY03AX-A-UUM	*	SUR-002-L	+
68	43	9	2.18E-10	0.87158	CONT-LEAK	*	FA8	*	FAZ	*	FLOW-RHR-B3	*
69					FS2	*	LAMBDA-AUX	*	Q9TG	*	RHRF48BB-V-UUM	*
70					SUR-002-L	+						
71	53	9	2.18E-10	0.87840	CONT-LEAK	*	FA8	*	FAZ	*	FS2	*
72					LAMBDA-AUX	*	Q9TG	*	RHRF47BB-V-UUM	*	SCSF06BB-DENER	*
73					SUR-002-L	+						
74	34	8	2.18E-10	0.88523	CONT-LEAK	*	FA8	*	FAZ	*	FS2	*
75					LAMBDA-AUX	*	Q9TG	*	RHRF65BB-N-UUM	*	SUR-002-L	+
76	7	8	2.18E-10	0.89206	2DG01PSC-OOO-LFO	*	CONT-LEAK	*	FA8	*	FAZ	*
77					FS2	*	LAMBDA-AUX	*	Q9TG	*	SUR-002-L	+
78	41	8	2.18E-10	0.89889	CONT-LEAK	*	CSCD300B-S-UUM	*	FA8	*	FAZ	*
79					FS2	*	LAMBDA-AUX	*	Q9TG	*	SUR-002-L	+
80	47	8	2.18E-10	0.90571	C2DG01F-S-UUM	*	CONT-LEAK	*	FA8	*	FAZ	*
81					FS2	*	LAMBDA-AUX	*	Q9TG	*	SUR-002-L	+
82	16	8	2.18E-10	0.91254	CONT-LEAK	*	CSCF068B-V-UUM	*	FA8	*	FAZ	*
83					FS2	*	LAMBDA-AUX	*	Q9TG	*	SUR-002-L	+
84	8	8	2.18E-10	0.91937	2DG01PK18CA-LFOO	*	CONT-LEAK	*	FA8	*	FAZ	*
85					FS2	*	LAMBDA-AUX	*	Q9TG	*	SUR-002-L	+

86	36	9	1.99E-10	0.92562	CONT-LEAK	*	FA8	*	FAZ	*	FS2	*
87					LAMBDA-AUX	*	LPCI-BETA	*	LPCI-PMS-CM	*	Q9TG	*
88					SUR-002-L	+						
89	72	8	1.69E-10	0.93092	/CONT-LEAK	*	FA8	*	FAZ	*	FS2	*
90					LAMBDA-AUX	*	Q9TG	*	RHRH01BX-HTX-LFB	*	SUR-027-R	+
91	114	8	8.16E-11	0.93348	C2DG01P-P-UUM	*	/CONT-LEAK	*	FA8	*	FAZ	*
92					FS2	*	LAMBDA-AUX	*	Q9TG	*	SUR-027-R	+
93	91	8	8.16E-11	0.93604	/CONT-LEAK	*	FA8	*	FAZ	*	FS2	*
94					LAMBDA-AUX	*	Q9TG	*	RHRC003B-P-UUM	*	SUR-027-R	+
95	66	8	8.16E-11	0.93860	/CONT-LEAK	*	FA8	*	FAZ	*	FS2	*
96					LAMBDA-AUX	*	Q9TG	*	RHRC02BB-P-NDUUM	*	SUR-027-R	+
97	117	9	8.16E-11	0.94116	/CONT-LEAK	*	FA8	*	FAZ	*	FS2	*
98					LAMBDA-AUX	*	Q9TG	*	RHRC02BB-P-UUM	*	SCSF06BB-DENER	*
99					SUR-027-R	+						
100	13	8	7.98E-11	0.94366	CONT-LEAK	*	FA8	*	FAZ	*	FS2	*
101					LAMBDA-AUX	*	Q9TG	*	RHRF98BX-XOC-LF	*	SUR-002-L	+
102	3	8	7.98E-11	0.94616	CONT-LEAK	*	FA8	*	FAZ	*	FS2	*
103					LAMBDA-AUX	*	Q9TG	*	RHRF47BB-VOC-LF	*	SUR-002-L	+
104	25	9	7.98E-11	0.94867	CONT-LEAK	*	FA8	*	FAZ	*	FS2	*
105					LAMBDA-AUX	*	NOFLOW-RHR-B1	*	Q9TG	*	RHR301BX-STR	*
106					SUR-002-L	+						
107	29	8	7.98E-11	0.95117	CONT-LEAK	*	FA8	*	FAZ	*	FS2	*
108					LAMBDA-AUX	*	Q9TG	*	RHRF03BB-VOC-LF	*	SUR-002-L	+
109	52	9	7.98E-11	0.95367	CONT-LEAK	*	FA8	*	FAZ	*	FS2	*
110					LAMBDA-AUX	*	NOFLOW-RHR-B1	*	Q9TG	*	RHRF04BB-VOC-LF	*
111					SUR-002-L	+						
112	55	8	7.25E-11	0.95595	CONT-LEAK	*	FA8	*	FAZ	*	FS2	*
113					LAMBDA-AUX	*	Q9TG	*	RHRF31BX-CCC-LF	*	SUR-002-L	+
114	44	8	7.25E-11	0.95822	C2DGF002-CCC-LF	*	CONT-LEAK	*	FA8	*	FAZ	*
115					FS2	*	LAMBDA-AUX	*	Q9TG	*	SUR-002-L	+
116	106	8	6.80E-11	0.96036	/CONT-LEAK	*	FA8	*	FAZ	*	FS2	*
117					LAMBDA-AUX	*	Q9TG	*	SEVY03CB-FMS-CC	*	SUR-027-R	+
118	71	8	6.80E-11	0.96249	C2DG01P-PMS-CC	*	/CONT-LEAK	*	FA8	*	FAZ	*
119					FS2	*	LAMBDA-AUX	*	Q9TG	*	SUR-027-R	+
120	82	8	6.80E-11	0.96462	/CONT-LEAK	*	FA8	*	FAZ	*	FS2	*
121					LAMBDA-AUX	*	Q9TG	*	RHRB01BB-BOO-CC	*	SUR-027-R	+
122	5	8	6.09E-11	0.96654	CCB2DG1P-BCO-LF	*	CONT-LEAK	*	FA8	*	FAZ	*
123					FS2	*	LAMBDA-AUX	*	Q9TG	*	SUR-002-L	+
124	40	8	6.09E-11	0.96845	1EB16212-BCO	*	CONT-LEAK	*	FA8	*	FAZ	*
125					FS2	*	LAMBDA-AUX	*	Q9TG	*	SUR-002-L	+
126	4	8	6.09E-11	0.97036	CONT-LEAK	*	CSCB068X-BCO-LF	*	FA8	*	FAZ	*
127					FS2	*	LAMBDA-AUX	*	Q9TG	*	SUR-002-L	+
128	38	9	5.44E-11	0.97207	CONT-LEAK	*	FA8	*	FAZ	*	FS2	*
129					LAMBDA-AUX	*	LPCI-MOV-BETA	*	LPCI-MOV-CM2	*	Q9TG	*
130					SUR-002-L	+						

131	37	9	5.44E-11	0.97377	CONT-LEAK	*	FA8	*	FAZ	*	FS2	*
132					LAMBDA-AUX	*	LPCI-MOV-BETA	*	LPCI-MOV-CM1	*	Q9TG	*
133					SUR-002-L	+						
134	51	8	5.22E-11	0.97541	CONT-LEAK	*	FA8	*	FAZ	*	FS2	*
135					LAMBDA-AUX	*	Q9TG	*	SEVB001X-BCO-LF	*	SUR-002-L	+
136	21	8	5.22E-11	0.97705	1EB36XB-BCO-LF	*	CONT-LEAK	*	FA8	*	FAZ	*
137					FS2	*	LAMBDA-AUX	*	Q9TG	*	SUR-002-L	+
138	2	8	5.22E-11	0.97869	1EB36YB-BCO-LF	*	CONT-LEAK	*	FA8	*	FAZ	*
139					FS2	*	LAMBDA-AUX	*	Q9TG	*	SUR-002-L	+
140	20	8	5.22E-11	0.98033	1EB236B-BCO-LF	*	CONT-LEAK	*	FA8	*	FAZ	*
141					FS2	*	LAMBDA-AUX	*	Q9TG	*	SUR-002-L	+
142	39	8	5.22E-11	0.98196	1EB2Y22X-BCO	*	CONT-LEAK	*	FA8	*	FAZ	*
143					FS2	*	LAMBDA-AUX	*	Q9TG	*	SUR-002-L	+
144	19	8	5.22E-11	0.98360	1EB212YX-BCO-LF	*	CONT-LEAK	*	FA8	*	FAZ	*
145					FS2	*	LAMBDA-AUX	*	Q9TG	*	SUR-002-L	+
146	35	8	5.22E-11	0.98524	1EB36Y1X-BCO-LF	*	CONT-LEAK	*	FA8	*	FAZ	*
147					FS2	*	LAMBDA-AUX	*	Q9TG	*	SUR-002-L	+
148	116	8	3.26E-11	0.98627	/CONT-LEAK	*	CSCD300B-PLG-LF	*	FA8	*	FAZ	*
149					FS2	*	LAMBDA-AUX	*	Q9TG	*	SUR-027-R	+
150	93	8	2.99E-11	0.98720	C2DG01P-PMS-LF	*	/CONT-LEAK	*	FA8	*	FAZ	*
151					FS2	*	LAMBDA-AUX	*	Q9TG	*	SUR-027-R	+
152	92	8	2.99E-11	0.98814	/CONT-LEAK	*	FA8	*	FAZ	*	FS2	*
153					LAMBDA-AUX	*	Q9TG	*	RHRC02BB-PMS-LF	*	SUR-027-R	+
154	87	8	2.28E-11	0.98886	/CONT-LEAK	*	FA8	*	FAZ	*	FS2	*
155					LAMBDA-AUX	*	Q9TG	*	SEVY03AX-ACX-LFI	*	SUR-027-R	+
156	110	8	1.96E-11	0.98947	/CONT-LEAK	*	EE-CSCD300B-PLG	*	FA8	*	FAZ	*
157					FS2	*	LAMBDA-AUX	*	Q9TG	*	SUR-027-R	+
158	70	8	1.96E-11	0.99009	/CONT-LEAK	*	EE-C2DG01F-PLG	*	FA8	*	FAZ	*
159					FS2	*	LAMBDA-AUX	*	Q9TG	*	SUR-027-R	+
160	24	9	1.74E-11	0.99063	CONT-LEAK	*	FA8	*	FAZ	*	FLOW-RHR-B3	*
161					FS2	*	LAMBDA-AUX	*	Q9TG	*	RHRB03BX-BCO-LF	*
162					SUR-002-L	+						
163	102	8	1.58E-11	0.99113	C2DG01F-PLG-LF	*	/CONT-LEAK	*	FA8	*	FAZ	*
164					FS2	*	LAMBDA-AUX	*	Q9TG	*	SUR-027-R	+
165	83	8	1.47E-11	0.99159	/CONT-LEAK	*	FA8	*	FAZ	*	FS2	*
166					LAMBDA-AUX	*	Q9TG	*	SEVY03CB-FMS-LF	*	SUR-027-R	+
167	119	8	1.36E-11	0.99202	2DG1PK18-ROO-LFO	*	/CONT-LEAK	*	FA8	*	FAZ	*
168					FS2	*	LAMBDA-AUX	*	Q9TG	*	SUR-027-R	+
169	69	8	1.36E-11	0.99244	/CONT-LEAK	*	CSCF068B-VCC-LF	*	FA8	*	FAZ	*
170					FS2	*	LAMBDA-AUX	*	Q9TG	*	SUR-027-R	+
171	61	9	1.36E-11	0.99287	/CONT-LEAK	*	FA8	*	FAZ	*	FLOW-RHR-B3	*
172					FS2	*	LAMBDA-AUX	*	Q9TG	*	RHRF48BB-VOO-LF	*
173					SUR-027-R	+						
174	109	8	1.36E-11	0.99330	/CONT-LEAK	*	FA8	*	FAZ	*	FS2	*
175					LAMBDA-AUX	*	Q9TG	*	SEVY03CB-F-UUM	*	SUR-027-R	+

176	75	8	1.36E-11	0.99372	/CONT-LEAK	*	FA8	*	FAZ	*	FS2	*	
177					LAMBDA-AUX	*	Q9TG	*	RHRB01BB-BOO-LF	*	SUR-027-R	+	
178	120	8	8.16E-12	0.99398	/CONT-LEAK	*	FA8	*	FAZ	*	FS2	*	
179					LAMBDA-AUX	*	Q9TG	*	RHRF55BX-R-UUM	*	SUR-027-R	+	
180	118	9	8.16E-12	0.99424	/CONT-LEAK	*	FA8	*	FAZ	*	FS2	*	
181					LAMBDA-AUX	*	Q9TG	*	RHRF64BB-V-UUM	*	SCSF06BB-DENER	*	
182					SUR-027-R	+							
183	113	9	8.16E-12	0.99449	/CONT-LEAK	*	FA8	*	FAZ	*	FS2	*	
184					LAMBDA-AUX	*	Q9TG	*	RHRF47BB-V-UUM	*	SCSF06BB-DENER	*	
185					SUR-027-R	+							
186	108	8	8.16E-12	0.99475	/CONT-LEAK	*	FA8	*	FAZ	*	FS2	*	
187					LAMBDA-AUX	*	Q9TG	*	RHRF74BB-V-UUM	*	SUR-027-R	+	
188	107	8	8.16E-12	0.99500	C2DG01F-S-UUM	*	/CONT-LEAK	*	FA8	*	FAZ	*	
189					FS2	*	LAMBDA-AUX	*	Q9TG	*	SUR-027-R	+	
190	105	8	8.16E-12	0.99526	/CONT-LEAK	*	FA8	*	FAZ	*	FS2	*	
191					LAMBDA-AUX	*	Q9TG	*	RHRH01BX-H-UUM	*	SUR-027-R	+	
192	103	9	8.16E-12	0.99552	/CONT-LEAK	*	FA8	*	FAZ	*	FLOW-RHR-B3	*	
193					FS2	*	LAMBDA-AUX	*	Q9TG	*	RHRF48BB-V-UUM	*	
194					SUR-027-R	+							
195	101	8	8.16E-12	0.99577	/CONT-LEAK	*	CSCD300B-S-UUM	*	FA8	*	FAZ	*	
196					FS2	*	LAMBDA-AUX	*	Q9TG	*	SUR-027-R	+	
197	94	8	8.16E-12	0.99603	/CONT-LEAK	*	FA8	*	FAZ	*	FS2	*	
198					LAMBDA-AUX	*	Q9TG	*	RHRF65BB-N-UUM	*	SUR-027-R	+	
199	90	9	8.16E-12	0.99628	/CONT-LEAK	*	FA8	*	FAZ	*	FS2	*	
200					LAMBDA-AUX	*	Q9TG	*	RHRF88BX-R-UUM	*	SCSF06BB-DENER	*	
201					SUR-027-R	+							
202	88	8	8.16E-12	0.99654	/CONT-LEAK	*	FA8	*	FAZ	*	FS2	*	
203					LAMBDA-AUX	*	Q9TG	*	RHRF51BB-N-UUM	*	SUR-027-R	+	
204	86	8	8.16E-12	0.99680	/CONT-LEAK	*	FA8	*	FAZ	*	FS2	*	
205					LAMBDA-AUX	*	Q9TG	*	RHRF87BB-V-UUM	*	SUR-027-R	+	
206	78	8	8.16E-12	0.99705	/CONT-LEAK	*	FA8	*	FAZ	*	FS2	*	
207					LAMBDA-AUX	*	Q9TG	*	SEVY03AX-A-UUM	*	SUR-027-R	+	
208	77	8	8.16E-12	0.99731	/CONT-LEAK	*	FA8	*	FAZ	*	FS2	*	
209					LAMBDA-AUX	*	Q9TG	*	SCSF06BB-V-UUM	*	SUR-027-R	+	
210	76	8	8.16E-12	0.99756	/CONT-LEAK	*	CSCF068B-V-UUM	*	FA8	*	FAZ	*	
211					FS2	*	LAMBDA-AUX	*	Q9TG	*	SUR-027-R	+	
212	74	8	8.16E-12	0.99782	/CONT-LEAK	*	FA8	*	FAZ	*	FS2	*	
213					LAMBDA-AUX	*	Q9TG	*	RHRF60BB-S-UUM	*	SUR-027-R	+	
214	68	8	8.16E-12	0.99808	2DG01PK18CA-LFOO	*	/CONT-LEAK	*	FA8	*	FAZ	*	
215					FS2	*	LAMBDA-AUX	*	Q9TG	*	SUR-027-R	+	
216	67	8	8.16E-12	0.99833	2DG01PSC-OOO-LFO	*	/CONT-LEAK	*	FA8	*	FAZ	*	
217					FS2	*	LAMBDA-AUX	*	Q9TG	*	SUR-027-R	+	
218	96	9	7.48E-12	0.99857	/CONT-LEAK	*	FA8	*	FAZ	*	FS2	*	
219					LAMBDA-AUX	*	LPCI-BETA	*	LPCI-PMS-CM	*	Q9TG	*	
220					SUR-027-R	+							
221	63	8	2.99E-12	0.99866	/CONT-LEAK	*	FA8	*	FAZ	*	FS2	*	
222					LAMBDA-AUX	*	Q9TG	*	RHRF47BB-VOC-LF	*	SUR-027-R	+	

223	112	9	2.99E-12	0.99875	/CONT-LEAK	*	FA8	*	FAZ	*	FS2	*
224					LAMBDA-AUX	*	NOFLOW-RHR-B1	*	Q9TG	*	RHRF04BB-VOC-LF	*
225					SUR-027-R	+						
226	89	8	2.99E-12	0.99885	/CONT-LEAK	*	FA8	*	FAZ	*	FS2	*
227					LAMBDA-AUX	*	Q9TG	*	RHRF03BB-VOC-LF	*	SUR-027-R	+
228	85	9	2.99E-12	0.99894	/CONT-LEAK	*	FA8	*	FAZ	*	FS2	*
229					LAMBDA-AUX	*	NOFLOW-RHR-B1	*	Q9TG	*	RHR301BX-STR	*
230					SUR-027-R	+						
231	73	8	2.99E-12	0.99904	/CONT-LEAK	*	FA8	*	FAZ	*	FS2	*
232					LAMBDA-AUX	*	Q9TG	*	RHRF98BX-XOC-LF	*	SUR-027-R	+
233	104	8	2.72E-12	0.99912	C2DGF002-CEC-LF	*	/CONT-LEAK	*	FA8	*	FAZ	*
234					FS2	*	LAMBDA-AUX	*	Q9TG	*	SUR-027-R	+
235	115	8	2.72E-12	0.99921	/CONT-LEAK	*	FA8	*	FAZ	*	FS2	*
236					LAMBDA-AUX	*	Q9TG	*	RHRF31BX-CCC-LF	*	SUR-027-R	+
237	100	8	2.28E-12	0.99928	1EB16212-BCO	*	/CONT-LEAK	*	FA8	*	FAZ	*
238					FS2	*	LAMBDA-AUX	*	Q9TG	*	SUR-027-R	+
239	65	8	2.28E-12	0.99935	CCB2DG1P-BCO-LF	*	/CONT-LEAK	*	FA8	*	FAZ	*
240					FS2	*	LAMBDA-AUX	*	Q9TG	*	SUR-027-R	+
241	64	8	2.28E-12	0.99942	/CONT-LEAK	*	CSCB068X-BCO-LF	*	FA8	*	FAZ	*
242					FS2	*	LAMBDA-AUX	*	Q9TG	*	SUR-027-R	+
243	98	9	2.04E-12	0.99949	/CONT-LEAK	*	FA8	*	FAZ	*	FS2	*
244					LAMBDA-AUX	*	LPCI-MOV-BETA	*	LPCI-MOV-CM2	*	Q9TG	*
245					SUR-027-R	+						
246	97	9	2.04E-12	0.99955	/CONT-LEAK	*	FA8	*	FAZ	*	FS2	*
247					LAMBDA-AUX	*	LPCI-MOV-BETA	*	LPCI-MOV-CM1	*	Q9TG	*
248					SUR-027-R	+						
249	62	8	1.96E-12	0.99961	1EB36YB-BCO-LF	*	/CONT-LEAK	*	FA8	*	FAZ	*
250					FS2	*	LAMBDA-AUX	*	Q9TG	*	SUR-027-R	+
251	111	8	1.96E-12	0.99967	/CONT-LEAK	*	FA8	*	FAZ	*	FS2	*
252					LAMBDA-AUX	*	Q9TG	*	SEVB001X-BCO-LF	*	SUR-027-R	+
253	99	8	1.96E-12	0.99973	1EB2Y22X-BCO	*	/CONT-LEAK	*	FA8	*	FAZ	*
254					FS2	*	LAMBDA-AUX	*	Q9TG	*	SUR-027-R	+
255	95	8	1.96E-12	0.99980	1EB36Y1X-BCO-LF	*	/CONT-LEAK	*	FA8	*	FAZ	*
256					FS2	*	LAMBDA-AUX	*	Q9TG	*	SUR-027-R	+
257	81	8	1.96E-12	0.99986	1EB36XB-BCO-LF	*	/CONT-LEAK	*	FA8	*	FAZ	*
258					FS2	*	LAMBDA-AUX	*	Q9TG	*	SUR-027-R	+
259	80	8	1.96E-12	0.99992	1EB236B-BCO-LF	*	/CONT-LEAK	*	FA8	*	FAZ	*
260					FS2	*	LAMBDA-AUX	*	Q9TG	*	SUR-027-R	+
261	79	8	1.96E-12	0.99998	1EB212YX-BCO-LF	*	/CONT-LEAK	*	FA8	*	FAZ	*
262					FS2	*	LAMBDA-AUX	*	Q9TG	*	SUR-027-R	+
263	84	9	6.53E-13	1.00000	/CONT-LEAK	*	FA8	*	FAZ	*	FLOW-RHR-B3	*
264					FS2	*	LAMBDA-AUX	*	Q9TG	*	RHRB03BX-BCO-LF	*
265					SUR-027-R							

TEMAC RUN TIME IN CPU SECONDS 209.22

Distribution

James Abel
Commonwealth Edison Co.
35 1st National West
Chicago, IL 60690

Kiyoharu Abe
Department of Reactor Safety
Research
Nuclear Safety Research Center
Tokai Research Establishment
JAERI
Tokai-mura, Naga-gun
Ibaraki-ken,
JAPAN

Bharat B. Agrawal
USNRC-RES/PRAB
MS: NLS-372

J. Alman
Commonwealth Edison Co.
LaSalle County Station
RR1, Box 220
2601 North 21st Rd.
Marsielles, IL 61341

George Apostolakis
UCLA
Boelter Hall, Room 5532
Los Angeles, CA 90024

Vladimar Asmolov
Head, Nuclear Safety Department
I. V. Kurchatov Institute
of Atomic Energy
Moscow, 123182
U.S.S.R.

Patrick W. Baranowsky
USNRC-AEOD/TPAB
MS: 9112

Robert A. Bari
Brookhaven National Laboratories
Building 130
Upton, NY 11973

Richard J. Barrett
USNRC-NRR/PD3-2
MS: 13 D1

William D. Beckner
USNRC-NRR/PRAB
MS: 10 E4

Dennis Bley
Pickard, Lowe & Garrick
2260 University Drive
Newport Beach, CA 92660

Gary Boyd
Safety & Reliability Optimization
Services
9724 Kingston Pike, Suite 102
Knoxville, TN 37922

D. A. Brosseau
ERCE, Inc.
7301A Indian School Rd NE
Albuquerque, NM, 87110

Robert J. Budnitz
Future Resources Associates
734 Alameda
Berkeley, CA 94707

Gary R. Burdick
USNRC-RES/RPSIB
MS: NLS-314

Arthur J. Buslik
USNRC-RES/PRAB
MS: NLS-372

Annick Carnino
Electricite de France
32 Rue de Monceau 8EME
Paris, F5008
FRANCE

S. Chakraborty
Radiation Protection Section
Div. De La Securite Des Inst. Nuc.
5303 Wurenlingen
SWITZERLAND

Michael Corradini
University of Wisconsin
1500 Johnson Drive
Madison, WI 53706

George Crane
1570 E. Hobble Creek Dr.
Springville, Utah 84663

Mark A. Cunningham
USNRC-RES/PRAB
MS: NLS-372

G. Diederick
Commonwealth Edison Co.
LaSalle County Station
RR1, Box 220
2601 North 21st Rd.
Marsielles, IL 61341

Mary T. Drouin
Science Applications International
Corporation
2109 Air Park Road S.E.
Albuquerque, NM 87106

Adel A. El-Bassioni
USNRC-NRR/PRAB
MS: 10 E4

Robert Elliott
USNRC-NRR/PD3-2
MS: 13 D1

Farouk Eltawila
USNRC-RES/AEB
MS: NLN-344

John H. Flack
USNRC-RES/SAIB
MS: NLS-324

Karl Fleming
Pickard, Lowe & Garrick
2260 University Drive
Newport Beach, CA 92660

James C. Glynn
USNRC-RES/PRAB
MS: NLS-372

T. Hammerich
Commonwealth Edison Co.
LaSalle County Station
RR1, Box 220
2601 North 21st Rd.
Marsielles, IL 61341

Robert A. Hasse
USNRC-RGN-III
MS: RIII

Sharif Heger
UNM Chemical and Nuclear
Engineering Department
Farris Engineering
Room 209
Albuquerque, NM 87131

P. M. Herttrich
Federal Ministry for the
Environment, Preservation of
Nature and Reactor Safety
Husarenstrasse 30
Postfach 120629
D-5300 Bonn 1
FEDERAL REPUBLIC OF GERMANY

S. Hirschberg
Department of Nuclear Energy
Division of Nuclear Safety
International Atomic Energy Agency
Wagramerstrasse 5, P.O. Box 100
A-1400 Vienna
AUSTRIA

M. Dean Houston
USNRC-ACRS
MS: P-315

Alejandro Huerta-Bahena
National Commission on Nuclear
Safety and Safeguards (CNSNS)
Insurgentes Sur N. 1776
C. P. 04230 Mexico, D. F.
MEXICO

Peter Humphreys
US Atomic Energy Authority
Wigshaw Lane, Culcheth
Warrington, Cheshire
UNITED KINGDOM, WA3 4NE

W. Huntington
Commonwealth Edison Co.
LaSalle County Station
RR1, Box 220
2601 North 21st Rd.
Marsielles, Il 61341

Brian Ives
UNC Nuclear Industries
P. O. Box 490
Richland, WA 99352

William Kastenberg
UCLA
Boelter Hall, Room 5532
Los Angeles, CA 90024

George Klopp [10]
Commonwealth Edison Company
P.O. Box 767, Room 35W
Chicago, IL 60690

Alan Kolaczkowski
Science Applications Int. Corp.
2109 Air Park Rd. SE
Albuquerque, NM 87106

Jim Kolanowski
Commonwealth Edison Co.
35 1st National West
Chicago, IL 60690

S. Kondo
Department of Nuclear Engineering
Facility of Engineering
University of Tokyo
3-1, Hongo 7, Bunkyo-ku
Tokyo
JAPAN

Jose A. Lantaron
Cosejo de Suguridad Nuclear
Sub. Analisis y Evaluaciones
Justo Dorado, 11
28040 Madrid
SPAIN

Josette Larchier-Boulanger
Electricte de France
Direction des Etudes Et Recherches
30, Rue de Conde
65006 Paris
FRANCE

Librarian
NUMARC/USCEA
1776 I Street NW, Suite 400
Washington, DC 80006

Bo Liwnang
IAEA A-1400
Swedish Nuclear Power Inspectorate
P.O. Box 27106
S-102 52 Stockholm
SWEDEN

Peter Lohnberg
Expresswork International, Inc.
1740 Technology Drive
San Jose, CA 95110

Steven M. Long
USNRC-NRR/PRAB
MS: 10 E4

Herbert Massin
Commonwealth Edison Co.
35 1st National West
Chicago, IL 60690

Andrew S. McClymont
IT-Delian Corporation
1340 Saratoga-Sunnyvale Rd.
Suite 206
San Jose, CA 95129

Jose I. Calvo Molins
Head, Division of P.S.A. and Human Factors
Consejo De Seguridad Nuclear
Justo Dorado, 11
28040 Madrid
SPAIN

Joseph A. Murphy
USNRC-RES/DSR
MS: NLS-007

Kenneth G. Murphy, Jr.
US Department of Energy
19901 Germantown Rd.
Germantown, MD 20545

Robert L. Palla, Jr.
USNRC-NRR/PRAB
MS: 10 E4

Gareth Parry
NUS Corporation
910 Clopper Rd.
Gaithersburg, MD 20878

G. Petrangeli
ENEA Nuclear Energy ALT Disp
Via V. Brancati, 48
00144 Rome
ITALY

Ing. Jose Antonio Becerra Perez
Comision Nacional De Seguridad
Nuclear Y Salvaguardias
Insurgentes Sur 1806
01030 Mexico, D. F.
MEXICO

William T. Pratt
Brookhaven National Laboratory
Building 130
Upton, NY 11973

William Raisin
NUMARC
1726 M. St. NW
Suite 904
Washington, DC 20036

D. M. Rasmuson
USNRC-RES/SAIB
MS: NLS-372

John N. Ridgely
USNRC-RES/SAIB
MS: NLS-324

Richard C. Robinson Jr.
USNRC-RES/PRAB
MS: NLS-372

Denwood F. Ross
USNRC-AEOD
MS: 3701

Takashi Sato
Deputy Manager
Nuclear Safety Engineering Section
Reactor Design Engineering Dept.
Nuclear Energy Group
Toshiba Corporation
Isogo Engineering Center
8, Shinsugita-cho, Isogo-ku,
Yokohama 235,
JAPAN

Martin Sattison
Idaho National Engineering Lab.
P. O. Box 1625
Idaho Falls, ID 83415

Louis M. Shotkin
USNRC-RES/RPSB
MS: NLN-353

Desmond Stack
Los Alamos National Laboratory
Group Q-6, Mail Stop K556
Los Alamos, NM 87545

T. G. Theofanous
University of California, S. B.
Department of Chemical and Nuclear
Engineering
Santa Barbara, CA 93106

Harold VanderMolen [10]
USNRC-RES/PRAB
MS: NLS-372

Magiel F. Versteeg
Inspector Reactor Safety
Nuclear Safety Department
Directorate-General of Labour
Ministry of Social Affairs and Employment
P.O. Box 90804
2509 LV Den Haag
Anna van Hannoverstraat 4

Edward Warman
Stone & Webster Engineering Corp.
P.O. Box 2325
Boston, MA 02107

Wolfgang Werner
Gesellschaft Fur Reaktorsicherheit
Forschungsgelande
D-8046 Garching
FEDERAL REPUBLIC OF GERMANY

7141 Technical Library [5]
7151 Technical Publications
4111 D. M. Kunsman
4115 A. C. Payne, Jr. [25]
6321 T. A. Wheeler

6400 N. R. Ortiz
6405 D. A. Dahlgren
6411 D. D. Carlson
6411 R. J. Breeding
6411 K. J. Maloney
6412 A. L. Camp
6412 S. L. Daniel
6412 S. E. Dingman
6412 B. D. Staple
6412 G. D. Wyss
6412 D. W. Whitehead
6413 F. T. Harper
6413 T. D. Brown
6449 M. P. Bohn
6449 J. A. Lambright
8523-2 Central Technical Files

NRC FORM 335 (2-89) NRCM 1102, 3201, 3202

U.S. NUCLEAR REGULATORY COMMISSION

BIBLIOGRAPHIC DATA SHEET

(See instructions on the reverse)

1. REPORT NUMBER (Assigned by NRC, Add Vol., Supp., Rev., and Addendum Numbers, if any.)

NUREG/CR-4832
SAND92-0537
Vol. 9

2. TITLE AND SUBTITLE

Analysis of the LaSalle Unit 2 Nuclear Power Plant: Risk Methods Integration and Evaluation Program (RMIEP)

Internal Fire Analysis

3. DATE REPORT PUBLISHED

MONTH	YEAR
March	1993

4. FIN OR GRANT NUMBER

A1386

5. AUTHOR(S)

J. A. Lambright, D. A. Brosseau, A. C. Payne, Jr., S. L. Daniel

6. TYPE OF REPORT

Technical

7. PERIOD COVERED (Inclusive Dates)

8. PERFORMING ORGANIZATION – NAME AND ADDRESS (If NRC, provide Division, Office or Region, U.S. Nuclear Regulatory Commission, and mailing address; if contractor, provide name and mailing address.)

Sandia National Laboratories
Albuquerque, NM 87185

9. SPONSORING ORGANIZATION – NAME AND ADDRESS (If NRC, type "Same as above"; if contractor, provide NRC Division, Office or Region, U.S. Nuclear Regulatory Commission, and mailing address.)

Division of Safety Issue Resolution
Office of Nuclear Regulatory Research
U.S. Nuclear Regulatory Commission
Washington, DC 20555

10. SUPPLEMENTARY NOTES

11. ABSTRACT (200 words or less)

This report is a description of the internal fire analysis performed on the LaSalle County Nuclear Generating Station, Unit II. As part of this effort, a new data base for fires was constructed (NUREG/CR-4586). This data base aided in quantification of fire initiating event frequencies. The most detailed integration between fire risk assessment and internal events analysis, to date, was also accomplished. The same system fault trees used for internal events were utilized for the fire analysis, which included modeling of components down to the contact pair level. Subsidiary equations were created to map the effects of cable failures and spurious actuations. All component and associated cable locations were traced and mapped into the fault trees. A detailed screening analysis was performed which showed most plant areas had a negligible contribution to fire-induced core damage frequency. A detailed analysis of the fire risk resulted in a total (mean) core damage frequency of 3.21E-5 per year.

12. KEY WORDS/DESCRIPTORS (List words or phrases that will assist researchers in locating the report.)

PRA, RMIEP, LaSalle, Level I

13. AVAILABILITY STATEMENT

Unlimited

14. SECURITY CLASSIFICATION

(This Page)

Unclassified

(This Report)

Unclassified

15. NUMBER OF PAGES

16. PRICE

Printed on recycled paper

Federal Recycling Program

UNITED STATES
NUCLEAR REGULATORY COMMISSION
WASHINGTON, D.C. 20555-0001

OFFICIAL BUSINESS
PENALTY FOR PRIVATE USE, $300

SPECIAL FOURTH-CLASS RATE
POSTAGE AND FEES PAID
USNRC
PERMIT NO. G-67

Mark A. Cunningham
USNRC-RES/PRAB
MS: NLS-372