NUREG/CR-4374
BNL-NUREG-51917
Vol. 2

A Review of the Oconee-3 Probabilistic Risk Assessment

External Events, Core Damage Frequency

Prepared by N. A. Hanan, D. Ilberg, D. Xue, R. Youngblood, J. W. Reed, M. McCann, T. Talwani, J. Wreathall, P. D. Kurth, K. Bandyopadhyay, C. Costantino

Brookhaven National Laboratory

Prepared for
U.S. Nuclear Regulatory Commission

NOTICE

This report was prepared as an account of work sponsored by an agency of the United States Government. Neither the United States Government nor any agency thereof, or any of their employees, makes any warranty, expressed or implied, or assumes any legal liability of responsibility for any third party's use, or the results of such use, of any information, apparatus, product or process disclosed in this report, or represents that its use by such third party would not infringe privately owned rights.

NOTICE

Availability of Reference Materials Cited in NRC Publications

Most documents cited in NRC publications will be available from one of the following sources:

1. The NRC Public Document Room, 1717 H Street, N.W.
   Washington, DC 20555
2. The Superintendent of Documents, U.S. Government Printing Office, Post Office Box 37082, Washington, DC 20013-7082
3. The National Technical Information Service, Springfield, VA 22161

Although the listing that follows represents the majority of documents cited in NRC publications, it is not intended to be exhaustive.

Referenced documents available for inspection and copying for a fee from the NRC Public Document Room include NRC correspondence and internal NRC memoranda; NRC Office of Inspection and Enforcement bulletins, circulars, information notices, inspection and investigation notices; Licensee Event Reports; vendor reports and correspondence; Commission papers; and applicant and licensee documents and correspondence.

The following documents in the NUREG series are available for purchase from the GPO Sales Program: formal NRC staff and contractor reports, NRC-sponsored conference proceedings, and NRC booklets and brochures. Also available are Regulatory Guides, NRC regulations in the *Code of Federal Regulations,* and *Nuclear Regulatory Commission Issuances.*

Documents available from the National Technical Information Service include NUREG series reports and technical reports prepared by other federal agencies and reports prepared by the Atomic Energy Commission, forerunner agency to the Nuclear Regulatory Commission.

Documents available from public and special technical libraries include all open literature items, such as books, journal and periodical articles, and transactions. *Federal Register* notices, federal and state legislation, and congressional reports can usually be obtained from these libraries.

Documents such as theses, dissertations, foreign reports and translations, and non-NRC conference proceedings are available for purchase from the organization sponsoring the publication cited.

Single copies of NRC draft reports are available free, to the extent of supply, upon written request to the Division of Technical Information and Document Control, U.S. Nuclear Regulatory Commission, Washington, DC 20555.

Copies of industry codes and standards used in a substantive manner in the NRC regulatory process are maintained at the NRC Library, 7920 Norfolk Avenue, Bethesda, Maryland, and are available there for reference use by the public. Codes and standards are usually copyrighted and may be purchased from the originating organization or, if they are American National Standards, from the American National Standards Institute, 1430 Broadway, New York, NY 10018.

NUREG/CR-4374
BNL-NUREG-51917
Vol. 2

A Review of the Oconee-3 Probabilistic Risk Assessment

External Events, Core Damage Frequency

Manuscript Completed: January 1986
Date Published: March 1986

Prepared by
N. A. Hanan, D. Ilberg, D. Xue, R. Youngblood, J. W. Reed*, M. McCann*,
T. Talwani**, J. Wreathall***, P. D. Kurth***, K. Bandyopadhyay, C. Costantino

Brookhaven National Laboratory
Upton, NY 11973

*Jack R. Benjamin & Associates, Inc.
**University of South Carolina
***Battelle Columbus Laboratories

Prepared for
Division of Safety Review and Oversight
Office of Nuclear Reactor Regulation
U.S. Nuclear Regulatory Commission
Washington, D.C. 20555
NRC FIN A3797

ABSTRACT

A review of the Oconee-3 Probabilistic Risk Assessment (OPRA) was conducted with the broad objective of evaluating qualitatively and quantitatively (as much as possible) the OPRA assessment of the important sequences that are "externally" generated and lead to core damage. The review included a technical assessment of the assumptions and methods used in the OPRA within its stated objective and with the limited information available. Within this scope, BNL performed a detailed reevaluation of the accident sequences generated by internal floods and earthquakes and a less detailed review (in some cases a scoping review) for the accident sequences generated by fires, tornadoes, external floods, and aircraft impact.

CONTENTS

Page

ABSTRACT....iii
LIST OF FIGURES....ix
LIST OF TABLES....x
ACKNOWLEDGMENTS....xi
EXECUTIVE SUMMARY....xiii

1. INTRODUCTION....1-1

1.1 Objective, Scope, and Approach to the Review....1-1
1.2 Organization of Report....1-1

2. A REVIEW OF THE OCONEE UNIT 3 ANALYSIS OF FLOODING EVENTS FROM SOURCES WITHIN PLANT BUILDINGS....2-1

2.1 Introduction....2-1
2.1.1 Background....2-1
2.1.2 Flood-Related Conditions and General Outline of Systems with Flooding Potential....2-1
2.2 Turbine Building Flood-Initiating Events....2-2
2.2.1 Identification of Important Flood Sources and Critical Flooding Areas....2-3
2.2.2 Definition of a Set of Discrete Flood-Initiating Events..2-4
2.2.3 Estimation of Flood-Initiating Events....2-6
2.2.3.1 Approach to the Flood Initiators Frequency Estimation....2-6
2.2.3.2 Categorization of Flood-Initiating Events in Broad Groups....2-9
2.2.4 Consideration of Flood Isolation Measures....2-10
2.2.5 Some Particular Considerations Reviewed by BNL....2-12
2.3 Core Damage Sequences and System Modeling....2-12
2.3.1 The Accident Sequences....2-12
2.3.1.1 Success Criteria....2-13
2.3.1.2 The Main Sequences....2-14
2.3.1.3 Supporting Logic and Fault Trees....2-15
2.3.2 Quantification of the Core Damage Sequences....2-16
2.3.2.1 Long-Term Assurance of ASW Suction....2-17
2.3.2.2 The Results of the Core Damage Sequences Quantification in the BNL Review....2-18
2.3.3 Analysis of Additional Flood Sequences....2-19
2.3.3.1 Other Turbine Building Flood Sequences....2-19
2.3.3.2 Auxiliary Building Flooding....2-20
2.4 Summary....2-21
2.5 References....2-23

Page

3. REVIEW OF SEISMIC EVENTS.....3-1

3.1 Introduction.....3-1
3.2 Seismic Hazard.....3-3
3.2.1 Review Approach.....3-3
3.2.2 Seismic Hazard Methodology.....3-4
3.2.3 Seismotectonic Regions.....3-6
3.2.4 Seismicity Parameters.....3-9
3.2.5 Ground Motion Characterization.....3-13
3.2.5.1 Ground Motion Attenuation.....3-13
3.2.5.2 Upper-Bound Accelerations.....3-14
3.2.6 Seismic Hazard/Fragility Interface.....3-15
3.2.7 Comparison with USGS Results.....3-17
3.2.8 Sensitivity Calculations.....3-17
3.2.9 Summary.....3-20
3.3 Seismic Fragility Analysis.....3-21
3.3.1 Introduction.....3-21
3.3.2 Plant Background and Fragility Methodology.....3-21
3.3.3 General Comments on the Seismic Fragility Analysis.....3-23
3.3.4 Review of Significant Components.....3-25
3.3.5 Conclusions.....3-37
3.4 Systems Analysis.....3-37
3.4.1 Introduction.....3-37
3.4.2 Seismic Sequences Definition--A Qualitative Review.....3-38
3.4.3 Review Results and Sensitivity Analysis.....3-39
3.5 References.....3-42

4. REVIEW OF OTHER EXTERNAL EVENTS.....4-1

4.1 Review of Fire Events.....4-1
4.1.1 Summary of OPRA Analysis.....4-1
4.1.2 BNL Review.....4-2
4.2 Review of Tornado Events.....4-3
4.2.1 Summary of OPRA Analysis.....4-3
4.2.2 BNL Review.....4-4
4.3 Review of External Flood.....4-5
4.3.1 Summary of OPRA Analysis.....4-5
4.3.2 BNL Review.....4-6
4.4 Review of Aircraft Impact Events.....4-6

5. SUMMARY.....5-1

APPENDIX A: REVIEW OF OPRA FAULT TREE APPROACH TO QUANTIFICATION OF THE FLOOD-INITIATING EVENTS.....A-1

APPENDIX B: TURBINE BUILDING FLOODING: QUANTIFICATION OF THE SEQUENCES, CORE DAMAGE BINS, AND CONTAINMENT-SAFEGUARD STATES.....B-1

APPENDIX C: FAULT TREES FOR THE POSSIBILITIES OF FLOODING REACHING CRITICAL LEVELS.....C-1

Page

APPENDIX D: REVIEW OF SEISMIC GROUND MOTION HAZARD, OCONEE NUCLEAR POWER PLANT SITE.....D-1

APPENDIX E: A REVIEW OF THE SEISMIC ANALYSES FOR JOCASSEE DAM AND OCONEE DIKES USED IN OCONEE PRA.....E-1

APPENDIX F: SEISMIC FAULT TREES.....F-1

APPENDIX G: A REVIEW OF THE MODELING OF FIRE PHENOMENA AND THE ESTIMATION OF FIRE FREQUENCIES IN THE OCONEE UNIT 3 PROBABILISTIC RISK ASSESSMENT FOR BROOKHAVEN NATIONAL LABORATORY BY BATTELLE COLUMBUS LABORATORIES.....G-1

LIST OF FIGURES

Figure		Page
2.1	Schematic of the CCW system	2-24
2.2	Event tree for sequences initiated by turbine-building flooding	2-25
2.3	Event tree for failure to maintain long-term SSF ASW suction after a flood	2-26
3.1	An example of the uncertainty in seismic hazard estimates	3-46
3.2	Oconee study seismotectonic model	3-47
3.3	U.S. Geological Survey seismic sources near the Oconee site	3-48
3.4	Seismic source areas for Expert 3 in LLNL seismic hazard study	3-49
3.5	Seismic source areas for Expert 11 in LLNL seismic hazard study	3-50
3.6	Seismic source areas suggested by Bollinger	3-51
3.7	Comparison of the best estimate ground motion models from the LLNL ground motion panel for magnitudes 5 and 7 and the Oconee attenuation relationships	3-52
3.8	Comparison of the Oconee attenuation models and other models provided by the SHCP ground motion experts	3-53
3.9	USGS seismic source areas defined in their 1982 study	3-54
3.10	Comparison of the 1976 and 1982 USGS studies and the mean Oconee seismic hazard curve	3-55
3.11	Comparison of cases 1 and 2	3-56
3.12	Comparison of cases 1 and 2 results using a three standard deviation truncation	3-57
3.13	Comparison of cases 1 and 2 using a five standard deviation truncation	3-58
3.14	Comparison for cases 1 and 2 hypothesis 1, I_{max} = VIII for the Piedmont and upper coastal plain source	3-59
3.15	Comparison for cases 1 and 2, hypothesis 2, I_{max} = IX for the Piedmont and upper coastal plain source	3-60
3.16	Comparison for cases 1 and 2, hypothesis 3, I_{max} = X for the Piedmont and upper coastal plain source	3-61
3.17	OPRA seismic event tree	3-62
3.18a	Sequence and core melt fragility curves	3-63
3.18b	Sequence fragility curves	3-64
4.1	OPRA cable-shaft fire event tree	4-8
4.2	OPRA event tree for sequences initiated by a severe tornado	4-8

LIST OF TABLES

Table Page

0.1 Summary of Annual Core Damage Frequencies for External Events.....xvi
2.1 Key Events Occurring at Four Critical Elevations in the Turbine Building (Modified Plant).....2-27
2.2 Time to Reach Critical Levels as a Function of Flood Flow Rate (in minutes).....2-28
2.3 Sources of Turbine-Building Floods at Oconee - BNL Review.....2-29
2.4 Categorization and Frequencies of Flood Initiators in OPRA and BNL Review.....2-31
2.5 The Conditional Probabilities That a Flood Results From the Unit 3 LPSW or Condensate Cooler System.....2-32
2.6 BNL Selection of Flooding Categories for the Flood-Isolation Failure Possibilities.....2-33
2.7 Values for the Failure to Maintain Long-term SSF ASW Suction After Flood.....2-34
2.8 Core Damage Conditional Probabilities of the Various Flood Categories.....2-35
2.9 Summary of Core Damage Frequencies for Turbine Building CCW Floods.....2-36
2.10 BNL Review Summary of Core Damage Frequencies for Floods From Sources Within the Plant.....2-37
2.11 BNL Review Core Damage Frequency Distribution for Floods From Sources Within the Plant.....2-37
3.1 Oconee Seismic Hazard Analysis Seismicity Parameters.....3-65
3.2 LLNL Seismic Hazard Characterization Project Seismicity Parameter Estimates.....3-66
3.3 Maximum Sustained Accelerations.....3-67
3.4 USGS Seismic Source Parameters for Sources Near the Oconee Site...3-68
3.5 Component Fragility Parameter Values.....3-69
3.6 Top Events for the Seismic Event Tree.....3-70
3.7 Comparison of Calculated Mean Frequency Values With Results in OPRA.....3-71
3.8 Effect of Including Components 38 Through 41.....3-72
3.9 Random Failure and Operator Error Mean Frequencies.....3-73
3.10 Effect of Alternative Random Failure and Operator Error Frequencies.....3-74
3.11 Bounding Cases: No Credit for Operators Actions Frequencies Mean Frequency of Failures (per year).....3-75
3.12 Effect of Relay Chatter.....3-76
3.13 Effect of Alternative Block Wall and Condenser Capacities.....3-77
3.14 Effect of Eliminating Jocassee Dam, Pressurizer, and Reactor Coolant Pump Components From Analysis.....3-78
3.15 Components Removed From Base Case Plant System Model.....3-79
3.16 Effect of Removing Components From Base Case System Model.....3-80
4.1 Summary of BCL Review.....4-9
4.2 Summary of Fire Core Damage Annual Frequency.....4-9
5.1 Summary of Annual Core Damage Frequencies for External Events.....5-3

ACKNOWLEDGMENTS

The authors wish to thank their colleagues in the Department of Nuclear Energy at Brookhaven National Laboratory for many discussions and comments throughout the course of this work.

This work was performed for the Reliability and Risk Assessment Branch (RRAB) of the U.S. Nuclear Regulatory Commission. Mr. E. Chelliah of RRAB was the technical monitor of the project. The authors wish to acknowledge F. Coffman, E. Chelliah, and A. Thadani for comments on the draft of this report.

Lastly, the authors would like to acknowledge the relentless effort and the high standard of quality of C. Conrad in editing and preparing this document for publication, and of S. Flippen for her excellent typing.

EXECUTIVE SUMMARY

This review of the Oconee-3 Probabilistic Risk Assessment (OPRA) by Brookhaven National Laboratory (BNL) was sponsored by the U.S. Nuclear Regulatory Commission (NRC). The OPRA, which was performed by the Nuclear Safety Analysis Center (NSAC), Duke Power Company (DPC), and other participating institutions, includes estimates of the frequency of accidents (internally and externally initiated events) that may lead to core damage, the frequency of release of radionuclides, and the frequency of occurrence of public health effects resulting from the various initiating events. This review presents an assessment of the frequency of core damage due to externally initiated events and other physical phenomena, i.e., internal floods, earthquakes, fires, tornadoes, external floods, and aircraft impact. A companion review of the frequency of core damage due to internal events is reported in Volume 1 of this report.

The broad objective of the BNL review of the external events portion of the OPRA was to evaluate qualitatively and quantitatively (as much as possible) the study's assessment of the important sequences that are "externally" generated and lead to core damage. To carry out this objective, BNL reviewed the assumptions and methods of the OPRA within its stated objective and with the limited information available. Within this scope, BNL performed a detailed reevaluation of the accident sequences generated by internal floods and earthquakes and a less detailed review (in some cases a scoping review) for the accident sequences generated by fires, tornadoes, external floods, and aircraft impact.

The review process included a site visit and a meeting with Duke Power Company and NRC. The DPC staff was helpful and cooperative throughout the course of the review.

Overall, the assessment of core damage frequency due to "external" events presented in the OPRA appears to use state-of-the-art methodologies, and within the stated scope the OPRA is a good piece of work. Table 0.1 presents the results of this review, and the main conclusions follow:

a. Floods from sources within the plant buildings - The OPRA presents a very detailed analysis of the accident sequences due to internal floodings, and BNL also performed a detailed reevaluation of this portion of the OPRA. The main results of this part of the review are the following:

a.1 The total core damage frequency for floods from sources in the plant calculated in this review is equal to 9.7E-5/yr, i.e.,

turbine building CCW floods: 8.0E-5/yr (OPRA = 8.8E-5/yr),

other floods in turbine building: 4.8E-6/yr,

auxiliary building floods: 1.2E-5/yr (OPRA = 1.3E-5/yr).

Note that the OPRA has done some analysis for the other floods in the turbine building and for the auxiliary building floods. However, in their final results, they fail to present the core damage frequency contribution from these sources.

a.2 A scoping assessment of the parameter uncertainties about the frequency of core damage for internal flooding was performed and the resulting distribution is

X_{05} = 1.3E-5/yr
X_{50} = 5.2E-5/yr
X_{95} = 2.8E-4/yr
Mean = 9.1E-5/yr

b. Seismic - The OPRA presents a detailed analysis of the accident sequences due to seismic events, and this review has performed an equivalent reevaluation of this part of the OPRA. The following comments and results are appropriate.

b.1 Seismic Hazard Analysis

- The methodology used to evaluate the frequency of exceedance is adequate and appropriate to characterize the seismic hazard at the Oconee site.

- Consideration of only one seismotectonic model is considered inappropriate and probably unconservative. The seismotectonic model used in the analysis is reasonable.

- Estimates of maximum intensity for the Piedmont source area are believed to be underestimated by one intensity unit. Sensitivity calculations indicate that this results in a moderate increase in the siesmic hazard (i.e., a factor of 2 to 10).

- Comparisons with the Seismic Hazard Characterization Program (SHCP) show that the attenuation models used in the Oconee study provide estimates of the seismic hazard that are lower. Overall, we judge this would have a small effect on the hazard estimates.

- The estimates of seismicity parameters, activity rates, and b-values are in reasonable agreement with estimates from other studies.

- In our opinion, the uncertainty in the estimate of the frequency of exceedance is underestimated, leading to an unconservative estimate of the site hazard. If a complete family of seismotectonic models and attenuation relationships is included in the analysis, we estimate there will be a moderate increase in the frequency of exceedance (i.e., a factor of 3 to 10).

b.2 Fragility Analysis - From the review of the fragility analysis and the resulting parameter values, the capacities used in the Oconee PRA are believed to be conservatively low. Generic median values were used for many of the components which resulted in conservative capacities. It was difficult to follow the capacity calculations which contain many inconsistencies and

in general are not well organized. In addition, the high-confidence low-probability values which correspond to the fragility parameter values are in many cases inconsistent with earthquake experience.

The median capacity for the block walls was particularly low. The analysis did not take advantage of the additional capacity provided by arching action, which is currently being verified by testing. This is an important consideration since the block walls are important contributors to the mean frequency of core melt.

b.3 Core Damage Frequency: Event Tree/Fault Tree Analysis - In this review, the fault trees used in the seismic events analysis were modified, and the resulting core damage frequency due to seismic events was equal to 8.2E-5/yr as compared to 6.3E-5/yr in the OPRA; in this review the OPRA seismic hazard and fragilities were used. Note that this review tried to replicate the OPRA analysis and a core damage frequency of 7.5E-5 was obtained (compared to 6.3E-5 in the OPRA); this result indicates a small difference due to the quantification tools used. It is also important to note that because of the complexity of the expressions for the core damage sequences, only a mean value of core damage frequency was estimated in this review, i.e., a distribution was not obtained.

c. Fires - In this review, a limited assessment of the modeling of fire growth and suppression and its effects on initiating events was performed. Several areas were found where a more detailed analysis than that performed in the OPRA would change the core damage frequency; for these areas, upper- and lower-bound factors were used in this review. Also, in the analysis of the fire event tree, this review found an area where a more detailed analysis (with much more information than BNL had access to) would change the results of the fire sequences. On the basis of these facts, this review assessed the core damage frequency from fire events to be between 6.9E-6/yr to 2.2E-4/yr as compared to the 1.0E-5/yr calculated in the OPRA.

Duke Power Company has stated, in a comment to this review, that a sequence added in this report (see Section 4.1.2) is theoretically possible but it was not appropriate or within the bounds of the OPRA scoping fire analysis because of the low probability combination of burned/not burned control and power cables. However, the information provided to BNL was not sufficient for the elimination of such sequences. If these postulated sequences were to be eliminated, the core damage frequency from fire events would change from between 6.9E-6/yr to 2.2E-4/yr to between 2.5E-6/yr to 8.1E-5/yr.

d. Tornadoes - In this review, only a scoping analysis of tornado events was performed. The review of the tornado-wind accident sequences found a sequence not presented in the OPRA (see Section 4.2) and this difference is responsible for the change in core damage frequency from 1.3E-5/yr to 2.3E-5/yr.

e. External Floods - In this review, no reanalysis was done for the external floods because of the lack of information and the restricted scope of

this review. Therefore, the core damage frequency of 2.5E-5/yr calculated in the OPRA for external flooding was not reassessed at BNL. This core damage frequency comes exclusively from the random failure of the Jocassee Dam and the assumption that a failure of the dam will result in core damage.

f. Aircraft Impact - Because of the negligible contribution to core damage, no effort was spent in the reassessment of the core damage frequency due to aircraft impact.

Table 0.1 Summary of Annual Core Damage Frequencies for External Events

	OPRA	BNL Review
Turbine-Building Floods		
• CCW Floods	8.8E-5	8.0E-5
• Other Floods	-[a]	4.8E-6
Auxiliary-Building Floods	-[a]	1.2E-5
Seismic	6.3E-5	8.2E-5
Fires[b]	1.0E-5	6.9E-6
		2.2E-4
Tornadoes	1.3E-5	2.3E-5
External Floods	2.5E-5	2.5E-5[c]
Aircraft Impact	Negligible	Negligible

[a]The OPRA addresses these floods but does not include them in its final results.
[b]BNL presents an upper and lower bound based on the fire phenomenology modeling (see Appendix G).
[c]Not reassessed in this review.

1. INTRODUCTION

1.1 Objective, Scope, and Approach to the Review

The Duke Power Company, in collaboration with the Nuclear Safety Analysis Center, has carried out a full-scope PRA of Oconee Unit 3. The Oconee PRA (OPRA) treats "internally" initiated scenarios (accidents initiated by a functional equipment failure or an external loss of offsite power), as well as externally initiated scenarios (i.e., earthquakes, tornadoes, floods, and aircraft impact) and other physical phenomena (fires and internal floods); here, both the externally initiated scenarios and other physical phenomena will be referred to as "external events." Containment analysis was also performed in the OPRA. BNL has conducted a full-scope review of the "internal" and "external event" scenarios defined in the OPRA. However, only a limited review of the containment response and radiological source term analyses in the OPRA has been performed. This report describes the review of the "external events" scenarios out to core damage; the review of the "internally" initiated events is presented in Volume 1 of this report. The review of the containment performance and radiological source terms will be presented in a separate report.

The broad objective of the BNL review of the external events portion of the OPRA was to evaluate qualitatively and quantitatively (as much as possible) the study's assessment of the important sequences that are "externally" generated and lead to core damage. To carry out this objective, BNL reviewed the assumptions and methods of the OPRA within its stated objective and with the limited information available. Within this scope, BNL performed a detailed reevaluation of the accident sequences generated by internal floods and earthquakes and a less detailed review (in some cases a scoping review) for the accident sequences generated by fires, tornadoes, external floods, and aircraft impact.

This review has been conducted principally by the Risk Evaluation Group within the Safety and Risk Evaluation Division at BNL. In addition, selected areas were reviewed by other groups at BNL and by contractors. Jack R. Benjamin and Associates (JBA) reviewed the seismic hazard and fragility analysis; modeling of fire growth and suppression was reviewed by Battelle Columbus Laboratories (BCL); and the Structural Analysis Division at BNL reviewed parts of the Jocassee seismic fragility analysis and other portions of the PRA.

The project monitor was E. Chelliah of the Reliability and Risk Assessment Branch of the U.S. NRC.

The review process was facilitated by several discussions with Duke Power Company and its consultants. BNL, JBA, and BCL reviewers visited the Oconee plant in May 1985.

1.2 Organization of Report

Section 2 presents a review of the flooding events from sources within plant buildings. Section 3 contains a review of seismic events. Section 4 presents the review of fires, tornadoes, external floods, and aircraft impact, and Section 5 presents a summary of the results of this review.

2. A REVIEW OF THE OCONEE UNIT 3 ANALYSIS OF FLOODING EVENTS FROM SOURCES WITHIN PLANT BUILDINGS

2.1 Introduction

2.1.1 Background

The Oconee Probabilistic Risk Assessment[1] (OPRA) has provided a very detailed analysis of flooding events within the turbine building, and a less detailed analysis for flooding within the auxiliary building. The analysis of the flooding events within the turbine building was carried out several times: three iterations were performed to increase the detail and realism of the analysis, and a final, fourth iteration was done to include several plant modifications made by Duke Power Company. The BNL review addresses this final analysis of the "modified" plant. The flooding analysis consisted of the following steps:

1. Identification of important flood sources and critical flooding areas. Critical flooding areas are those where a flood could result in a plant trip and could cause failure of equipment that might be needed for core cooling after the plant trip.

2. Definition of a set of discrete flood-initiating events for each flood source and critical flooding area, to best represent the spectrum of possible flood rates for the purposes of constructing and quantifying core damage sequences.

3. Estimation of the frequency of each flood-initiating event, and their grouping into several flood categories.

4. Construction of core damage sequences for each flood-initiating category, and plant systems modeling.

5. Quantification of the sequences, core damage bins, and containment-safeguard states.

In this report, the first three steps for flooding events within the turbine building are discussed in Section 2.2, and the last two steps are presented in Section 2.3; Section 2.3 also presents a brief discussion on the flooding events within the auxiliary building. Section 2.4 presents a summary of the results obtained in this review.

2.1.2 Flood-Related Conditions and General Outline of Systems With Flooding Potential

The potential for flooding at Oconee stems from the fact that the turbine building is at a lower elevation than Keowee Lake which provides the suction to the condenser circulating water (CCW) system.

The Oconee plant is built between the intake and discharge canals of Lake Keowee at a level approximately 25 ft below the lake's level. During normal operation, the CCW pumps are needed only to overcome friction losses in the piping, and it was found that the flow out of a break in the CCW system would

continue at nearly the regular rate whether or not the pumps continue to operate.

The turbine building basement at Oconee contains equipment needed both for normal operation and for the response to abnormal conditions. In addition to the equipment in the turbine building, the auxiliary building contains safety equipment at levels below the turbine building basement. The two buildings are connected through doors that are watertight to a level of 6 ft ("modified" plant). Above that level it is considered that water from the turbine building will rapidly spill into the auxiliary building. In a meeting[2] with Duke Power Company it was stated that another modification is going to be made to seal the interface between the two building to a level of 20 ft. This is considered in neither the OPRA nor the BNL review.

The arrangement of the CCW piping in the turbing building which has the potential to be a source for flooding is shown in Figure 2.1. There are four CCW pumps taking suction from the intake canal. The pumps feed into a 186-in.-diam pipe that is embedded in the turbine basement floor, and branches into six 78-in.-diam pipes from the floor in the three sections of the main condenser. A similar set of six pipe sections are on the discharge side of the condenser. They drop down back into the floor and join each other below the floor level into two 132-in.-diam pipes. These two pipes rise back to the Lake Keowee level and discharge into the outlet canal on the opposite side of the plant. This arrangement is repeated for each of the three Oconee units (i.e., there are eighteen 78-in. inlet and outlet pipes from the condensers).

In addition to the CCW, other flooding sources are present in the turbine building basement:

(a) Condensate Coolers Systems

(b) Recirculating cooling water (RCW) system

(c) Low pressure service water (LPSW) system

(d) High pressure service water (HPSW) system

(e) Unwatering system.

System (a) and parts of systems (b) and (e) are also seen in Figure 2.1. For more details on the systems' description, the OPRA should be consulted.

2.2. Turbine Building Flood-Initiating Events

The following subsection covers the review of the first three steps listed in Section 2.1.1. In support of these three steps, OPRA has conducted a detailed review of the actual flooding events in the data base for the U.S. nuclear plants. It found approximately 60 events (up to 1981) with only 4 (3 in turbine building) resulting in flow rates in excess of 12,000 gpm. The

operating experience was not used directly* in quantifying the frequencies of the flood-initiating events. The frequencies are derived from piping and valve breaks considering all the relevant piping located in the turbine building. They are also derived from maintenance and incorrect assembly of systems after maintenance. Thus, much more detailed plant specific analysis is conducted in the derivation of the flood initiating event frequencies (see discussions in Section 2.2.3). The results of the analysis of flooding experience are used for background information mainly in postulating failure modes for the identification and selection of important flood sources. Several examples of the use of the operating experience in introducing failure modes into the flooding analysis are:

a. Valve closed inadvertently and water hammer causing the rupture of an expansion joint.**

b. Expansion joints failure causing extensive leakage.

c. Pump casing rupture due to pump startup while it was apparently rotating backward (a TMI event).

d. Air-operated isolation valve opens on air interruption or due to operator error while a system is open for maintenance.

e. Oconee flood that occurred in 1976 caused by a pneumatic isolation valve failing open after an inverter failure, while the CCW water boxes' manways were open. This flood was recovered after 45 minutes by fixing the inverter and reclosing the valve. It reached a level of two feet and caused failure of equipment associated with the main and emergency feedwater systems. Modifications were done to prevent a recurrence of this event (see OPRA, page 9-138).

2.2.1 Identification of Important Flood Sources and Critical Flooding Areas

Identification of the flood-initiating events was guided by two criteria: (1) a flood event must cause a trip or transient, and (2) the specific flood sources should be able to fail equipment needed for core cooling. The first criterion is satisfied by any flood of a few thousand gpm because it will actuate the 0.5-ft-level flooding alarms that require the operator to manually trip the unit. The second criterion is more demanding and can be met by floods having a flow rate of 12,000 gpm or more (see Section 2.2.2). Thus, the OPRA searched for all potential flooding sources having flow rates greater

*An early iteration of the Oconee flooding analysis used the operating experience to derive the Oconee flooding frequency. The approach is described in OPRA in general terms to provide another verification for the reasonableness of the results of the fault tree approach used in the later two iterations of the study. The value for the flooding frequency from the two different iterations of the study compare well. The fault tree approach is more detailed and refers more specifically to specific equipment of the Oconee plant which can be a flooding source, so that it helps to identify major contributors.

**Note that a recent event of flooding due to expansion joint rupture following a water hammer occurred at La Crosse plant (1985); the Quad Cities (1972) was the only event of this kind known previously.

than 12,000 gpm. The CCW piping in the turbine building basement and all systems connected to it such as RCW, Condensate Coolers, LPSW, and HPSW were reviewed to determine the maximum potential flow rates that could result from a break in their integrity.

The critical equipment and its height above the turbine building basement floor were determined by a review of drawings and a walk through, and this resulted in the definition of three characteristic critical levels as shown in Table 2.1. This table includes all equipment considered in the response to transients or LOCAs at Oconee that can be affected by flooding. These levels were verified during a plant walk through by the BNL reviewers.

The turbine building drain is a large 6-ft^2 hole located in the building wall leading through separate piping to the tail-race which is 100 feet lower than the turbine building floor. This allows for a significant discharge of flood water out of the building, depending on the flood level above the floor. The possibility of reaching a critical level is calculated in Appendix L of the OPRA report,[1] taking into account both the break discharge flow rates and the drainage rate. BNL accepted the Appendix L results shown in Figure L.7 of the OPRA and made two linear approximations to the figure which enabled the calculation of the time required to reach any level of flood for any flood flow rate. The summary of these calculations is given in Table 2.2. It is equivalent to the flow rates given in Figure L.7 of the OPRA Appendix L, but provides a more convenient tool for calculating operator response times and for the grouping of flood-initiating events into flood-initiating categories.

2.2.2 Definition of a Set of Discrete Flood-Initiating Events

The flood sources listed in Section 2.1.2 were reviewed in detail, and the following information was collected for each system which is a potential flooding source:

a. Pipe sections and length, valves including their size and type, number of welds, and expansion joints.

b. The elevation in the turbine building of each of the above.

c. Maintenance frequency and isolation procedure for condenser, condensate coolers, valves, expansion joints, and LPSW.

In addition to the above data necessary for the calculations of the flood rates, the potential for isolation in each case was also considered:

1. Isolation of the pump discharge valves in the Keowee Lake intake.

2. Isolation of the pneumatic outlet valves.

3. Any single valve in the above failing to close.

Table 9.31 of OPRA is a summary of the flood-initiating events considered and their flow rates. However, the isolation potential given in that table is for the unmodified plant. The corresponding BNL review table is given as Table 2.3; it is based on the CCW piping characteristics given in Table 9.33

of the OPRA, which was used without any change. Its review was beyond the scope or information available to BNL.

In general, the OPRA calculations for the unmodified plant were found to be correct. Some comments acquired in the recalculation by BNL are:

a. Agreement with OPRA break frequency for the inlet and outlet manual butterfly valves was obtained by BNL only when they were assumed to have one half the break area stated in the OPRA, i.e., $\pi R^2 H = \pi(78)^2 * 14/144\ ft^2$.

b. Three manways on the floor on the inlet side were not included in OPRA. They have a lower frequency of use. BNL included them and considered their lower frequency of use.

c. The flow rate of the unisolable manways on the outlet is too low (23,000 gpm in OPRA vs 56,000 in BNL--apparently the wrong elevation was considered).

d. The CCW crossover valves' diameter is 42 inches in most of the pipe sections above the floor.

e. Page 9-153 case (3): friction losses (k) should be 3.5 instead of 1.4.

f. The use of $(1 + K_{ex})$ in the equation for calculating the break flow velocity is suspected to double count exit losses. However, not all the friction losses in pipe contractions are included, which have a compensating effect.

BNL has also calculated a flood rate from the rupture of the expansion joints which is higher than given in OPRA Table 9.31 (120,000 gpm* instead of 76,000 gpm). In a meeting with Duke Power, it was stated that the expansion joint rupture flow rates, because of their importance, were calculated separately by a more elaborate piping analysis computer code; the results of this analysis were shown to BNL reviewers and NRC staff present. Thus, BNL considered that the OPRA results are more realistic than the approximate equations used by BNL to perform its review. The expansion joint flow rates are therefore used as they appear in the OPRA.

The BNL recalculations of the flow rates included the modifications considered in the "modified plant." These are:

a. CCW crossover valves 3CCW-40 and 3CCW-42 are normally closed, isolating the CCW flow between the units (i.e., each unit has its own CCW flow to and from the Lake).

b. Isolation of one train of the condensate coolers in all three units. On reactor trip, the unit 1 control valve on the unisolated condensate coolers closes. Units 2 and 3 maintain back flow through one of their condensate coolers after reactor trip.

*Oconee FSAR also calculated a 115,000-gpm flow rate.

c. Following the 6-in.-level flood alarms, the operator manually trips the CCW pumps which, on their closure, close the intake valves at CCW pump discharge.

d. CCW pump trip causes the pneumatic discharge valves to close. Relay CWSRRVN failure will fail the closure of all six pneumatic valves.

2.2.3 Estimation of Flood-Initiating Events

2.2.3.1 Approach to the Flood Initiators Frequency Estimation

The OPRA estimates the frequency of the flooding-initiating events on the basis of pipes, valves, and expansion joints rupture rates and from evaluation of potential flooding during maintenance, as the result of either human error or isolation equipment malfunction.

a. Pipe Rupture

Flood frequencies due to pipe rupture were estimated by the methodology proposed by Thomas.[4] It requires detailed information on the length of pipe sections and the number of welds in each section. The methodology yields an estimate of the frequency of catastrophic ruptures. OPRA assumed that the rupture sizes will have frequencies distributed according to their size so that a small-size rupture will occur more frequently than the maximum-size double-ended guillotine break. The distribution assumed is:

Probability of a maximum-size double-ended guillotine break: 0.1

Probability of a large rupture: 0.3

Probability of a medium rupture: 0.6.

The above approach yields higher pipe-break frequencies than could be obtained from the use of the mean rupture rates given by the RSS[5] for pipes larger than 3 inches in diameter. The pipe rupture rates used by Thomas are based on an appraisal of the data in References 5 to 8.

The reviewers do agree that, overall, the Thomas[3] methodology as modified by OPRA to include the break-size-frequency distribution represents a realistic model. While the rupture rates derived by Thomas seem to be on the high side, they are used in the OPRA for the piping of the secondary system which can be anticipated to have rupture rates somewhat higher than those of the primary system.

b. Valve Rupture

Hubble and Mille[9] (report on valve failure rates) was used by the OPRA to obtain the following failure rates for external rupture:

AOVs -- 2.0×10^{-7}/hr
Manual valves -- 1.3×10^{-8}/hr
MOVs -- 1.7×10^{-7}/hr
Check valves -- 5.2×10^{-8}/hr.

The above failure rates are in fact valve leakage failure rates, because most LERs from which they are derived are events of very small leakages, many just in excess of the technical specification limits. OPRA refers to 18 LERs given in Reference 9 of which only one could be regarded as a rupture. BNL in a past review[10] had difficulties* in reproducing this value from the LERs reported in Reference 9; however, this review used the same 1/18 factor. Note that this 1/18 factor is about the same as the factor of 6% derived by Thomas[4] for the ratio of leakage to rupture in piping.

The above failure rates were then modified by OPRA using a distribution of 10%, 30%, and 60% for the maximum, large, and medium ruptures, respectively, in the same way it was used for the pipe rupture.

BNL compared these results with the RSS[5] mean value of 3×10^{-8}/hr for valve rupture used equally for all kinds of valves. It is the reviewers' opinion that the 1/18 factor could also be used with the RSS[5] valve failure rate, and in an earlier study,[10] BNL used it for valve rupture failure rates. However, when the distribution of valve break size and frequency is also applied, the probability of catastrophic rupture of a manual valve in OPRA[1] becomes smaller by a factor of 10 compared to the value derived if the RSS[5] rupture data are used. The LER data[9] for valves indicate that manual valves have a lower external leakage frequency than AOVs or MOVs by a factor of more than 10. This does not necessarily imply that the external valve rupture frequency of these valves is smaller by such a large factor. Similarly, it could also be argued that the rupture frequency of the AOVs used in the OPRA is on the high side.

BNL, nevertheless, used the same rupture rates as those used in the OPRA, because the effect on Oconee core damage frequency would not be large if higher values for manual valves rupture were used. The above discussion is intended to point out that the contribution from manual valves may have been underestimated, but more work is needed to confirm such a conclusion.

c. Expansion-Joint Rupture

OPRA has performed a special study on the rupture rate of expansion joints. Two failure modes were considered in OPRA:

1. Random failure rates. These were derived from the NPE[11] data base (0.01 to 0.02 per plant-year); this data base is known to include small leaks as well as other failure modes. Also, data from Duke Power fossil plants experience were considered.

2. A water hammer causing the expansion joint to rupture. A valve transfer closed failure mode was considered to cause the water hammer that has the potential to rupture a close-by expansion joint.

*There are 130 LERs in Reference 9 under the title of "External Leakage/Rupture"; however, none is an external valve rupture of significance. More time than was available for the BNL review is required to evaluate the 1/18 factor in detail.

The expansion joint random failure rate was evaluated to be 2.5×10^{-4} per expansion joint per year. It was derived by using the NPE[11] data as a prior, and the Oconee evidence of one event in over 3,000 expansion joint years was used to obtain the above posterior.

For the expansion joint random failure, the same distribution of 10%, 30%, and 60% used in pipes and valves was not used, because sufficient data to support such a distribution were not available to OPRA.

The frequency of water hammers on the outlet pipe given a pneumatic valve transferring closed was calculated as

$$(18 \text{ valves}) \times (8.9 \times 10^{-8} \text{ hr}^{-1}) * 8760 \text{ hr} = 4.2 \times 10^{-3} \text{ yr}^{-1},$$

and 30% of these cases were judged to cause a severe rupture of the close-by expansion joint. In the last 10 years two cases of expansion joints rupture by water hammer were reported (Quad Cities and LaCrosse). The above value is consistent with this experience.

This OPRA evaluation results in a frequency of 0.01 per year for a maximum rupture of an expansion joint in one of the condenser inlet or outlet pipes. These failures account for one third of the total flooding frequency calculated for Oconee. BNL has accepted this approach and considers it to be reasonable and consistent with the data available.

d. Maintenance Events

Several maintenance acts are considered in OPRA:

1. Water boxes removed for retubing (1/40 years) and either operator reinstallation error or isolation valve opening inadvertently.

2. Valves removed for maintenance and either valve improperly installed or isolation valve inadvertently opens.

3. Manways removed during refueling or shutdown, and manways are improperly reinstalled (there are about 100 manways in the turbine building CCW system).

4. Expansion joint is out for replacement (1.8 per year) and valves open inadvertently.

5. Condensate coolers opened during shutdown and improperly reinstalled.

6. Other similar equipment maintenance.

The cases of improper reinstallation were judged to have three types of errors of different size and probability. It was assumed that 10% of the installation errors would be maximal, 30% large, and 60% small. The basic probability of installation error was taken as 3×10^{-3}, the same as for procedural error of omission.

BNL accepted the above approach for maintenance-induced floods. OPRA has included another factor of 0.1 for recovery of maintenance-induced floods

starting on the inlet side of the condenser. BNL did not find a significant reason for treating the inlet and outlet sides of the condenser in a different way (by a factor of 10) and used the same value for improper installation errors with no recovery for both. This has increased the contribution from inlet side floods, while the outlet side floods contribution from maintenance remained the same as in the OPRA analysis.

It can be concluded from the above discussion that BNL agrees in most cases with the frequencies calculated for the individual flood-initiating events in OPRA. The flooding-initiator frequencies for OPRA and for this review are given in Table 2.4.

2.2.3.2 Categorization of Flood-Initiating Events in Broad Groups

The OPRA has used three broad groups for the flood analysis; in two of these groups it distinguishes between breaks occurring on the intake side of the condenser and those occurring on the outlet side. In addition it distinguishes between isolable and nonisolable breaks. Thus the resulting grouping in the OPRA becomes:

FVLI: Very large flood and isolable. Flood rate ~160,000 to 450,000 gpm.
FVLN: Very large flood and nonisolable. Flood rate ~160,000 to 450,000 gpm.
FLII: Large flood and isolable. Inlet side flood rate ~60,000 to 160,000 gpm.
FLIO: Large flood and isolable. Outlet side flood rate ~60,000 to 160,000 gpm.
FLN: Large flood and nonisolable. Flow rate between 60,000 to 160,000 gpm.
FMII: Medium flood and isolable. Inlet side flow rate 12,000 to 60,000 gpm.
FMIO: Medium flood and isolable. Outlet side flow rate 12,000 to 60,000 gpm.
FMN: Medium flood and nonisolable. Flow rate 12,000 to 60,000 gpm.

BNL made a more detailed grouping than the above for the following reasons:

1. As seen from Table 2.3 for the column of "particular valve to break fails," different groups of flooding will result for an inlet and an outlet for very large floods. Therefore, BNL also distinguished between the inlet and outlet for the very large floods.

2. The FVLI group covers a large range of flood rates for which different operator response times are anticipated, as can be seen from Table 2.2 (e.g., 2-ft level reached in 11 min for 170,000-gpm flood and in 4 min for 450,000-gpm flood). Therefore, BNL made a breakdown of the very large flood category into two subcategories: (1) very large No. 1 (350,000 to 450,000 gpm) and (2) very large flood No. 2 (170,000 to 349,000 gpm).

3. Similarly, the large flood group was divided into two: (1) large flood No. 1 (120,000 to 169,000 gpm) and (2) large flood No. 2

(60,000 to 119,000 gpm). The main reason for this breakdown was that a large flood No. 1 has the potential for reaching the 6-ft level in one to two hours, whereas the large flood No. 2 cannot reach this critical level. OPRA did not consider this division, primarily because the dominant flood-initiating event in their large flood category is the failure of the expansion joint which has a flow rate of about 75,000 gpm. However, some other flood-initiating events are included and give rise to some additional contributions to the core damage frequency, which were later found to be quite small.

The summary of the OPRA and BNL grouping is shown in Table 2.4. The values for OPRA are obtained from fault trees (OPRA Figures 9.63 to 9.70). The BNL frequencies for each group are evaluated in Appendix A which provides the list of initiators, their flow rates, and the frequency of each group.

In deriving the frequencies of OPRA and BNL, additional considerations were also taken into account. The OPRA has divided the pipe and valve ruptures and improper installation errors into maximum, large, and small and assigned different frequencies to them as discussed before. OPRA defined large rupture or installation error as having a break size that leads to a flood one category less severe than the one obtained for the maximum size and defined small (or medium) rupture as two categories less severe. As a consequence of this breakdown, both a 78-in. pipe rupture (450,000 gpm maximum flow rate) and a 78-in. butterfly valve rupture (175,000 gpm maximum flow rate) were transferred to the same group of large floods when the 30% case was considered, and similarly to the medium flood for the 60% case. However, the large flood from a 78-in. pipe rupture can still reach the 6-ft critical-level and the 78-in. butterfly valve large rupture cannot. To allow for this different effect, this review considered the flow rate reduction factors proportional to the break size area; a value of 0.3 as a reduction factor from the maximum flood rate to the large and from the large flood rate to the small. Appendix A of this report shows the effect of this different breakdown. Overall, as will be seen later, these changes did not have a large effect on the resulting core damage frequency because the longer time available to the operator to take action in the case of the floods with lower flow rates compensates for the increase due to the transfer to a higher flow rate category.

2.2.4 Consideration of Flood Isolation Measures

The OPRA flood study considered that the operator took prompt action to isolate the flood. This is performed by a manual action to trip all CCW pumps. The flooding emergency procedure[12] requires the operator to take this action immediately after receiving the flooding alarm from the 0.5-ft flooding level sensors. Upon the pumps' trip, all the pump discharge valves (intake valves) and the pneumatic condenser outlet valves are automatically shut in about three minutes. Following successful isolation of all the valves, only a flood rate of about 20,000 gpm or less can continue, because of the designed backflow through the condensate coolers. This backflow exists only in Oconee units 2 and 3. In Oconee unit 1, only a small backflow rate of less than 12,000 gpm continues from the RCW lines backflow, because the condensate coolers are automatically isolated when the unit is tripped. This backflow is provided to supply suction to the LPSW and HPSW pumps in unit 2 and/or unit 3. A LPSW pump and a HPSW pump when operating will use about one half the

20,000 gpm flow rate. Thus, if the break causing the flood is in the outlet (isolable) or inlet piping, the rate of discharge through the break would be smaller than 12,000 gpm if a LPSW pump (up to 15,000 gpm) is in operation. However, if the break occurs in the condensate coolers path, the CCW crossover, or the LPSW system, then LPSW suction would be lost and the flood rate would continue at about 20,000 gpm, after isolation of the intake and outlet valves.

The above considerations were modeled in both the OPRA and the BNL review studies. In addition, several valve and relay failures, or delayed operator action to trip the CCW pumps can fail the isolation of the flood to the flow rate corresponding to the smaller backflow rate. The failures considered in OPRA are:

a. Failure of any of the four intake valves to close (CCWMVC).

b. Failure of any of the six pneumatic outlet valves to close (CCWAVC).

c. Failure of the particular pneumatic outlet valve leading to the break (CCWAV1C in OPRA and CC20AVC in BNL).

d. Failure of the operator to trip the CCW pumps in time (e.g., CCWI15H).

BNL used the same isolation failure considerations as above but distinguished two cases for the failure of the outlet valves:

(b1) Failure of any of the six pneumatic outlet valves to close (CCWAVC).

(b2) Failure of all pneumatic outlet valves because of a common relay failure (CWSRRVN).

For case (b2) the break flow rates are higher than for a (b1), as can be seen in Table 2.3.

The effects of each of the above isolation measure failures are given in Tables 2.5 and 2.6. Table 2.5 shows the fraction of the flood frequencies that affect the LPSW suction and therefore cause direct failure of this system. Note that when the break occurs in the condensate coolers (rather than in the LPSW system itself), a recovery action to supply LPSW to unit 3 from the other unaffected unit is possible. Table 2.6 summarizes the categorization of the flood rates following the failure of any of the isolation measures. It is seen that even in the case of partial isolation failure the flood rate can be smaller. Any case of transfer to another category of flood rate has a reduced potential for damaging safety systems.

Note that floods denoted as "unisolable" have their flood rate continuing until additional isolable actions are taken beyond those considered in this section.

The data used to quantify an isolation measure failure are taken from the OPRA Table 9-40, which is consistent with the basic data used in the OPRA.

2.2.5 Some Particular Considerations Reviewed by BNL

During the BNL review of the OPRA flooding study, several elements were reviewed in particular:

a. OPRA refers in their data analysis (see Table 5.3, page 5.20) to the failure rates of MOVs. For Oconee, the value of 6.4×10^{-3}/d is used for all MOVs, except for the condenser circulating water (CCW) system; in this case (CCW system) a value of 0.1/d is given. If the latter were to be used in the flooding study, the intake isolation failure probability would increase significantly and a higher frequency of core damage would result. This seeming discrepancy was discussed with Duke Power[2] and it was shown that the 0.1/d is based on the MOVs of the CCW emergency discharge lines which do not affect the flooding study. Duke Power stated that the experience with the CCW intake valves does not significantly deviate from the general MOV experience at Oconee.

   Therefore, the 6.4×10^{-3}/d is appropriate and was used by both the OPRA and this review.

b. Appendix A.3 of OPRA discusses the HVAC system. It states that the LPI motors require HVAC room cooling to prevent motor overheating. This has some effect ($\sim 5 \times 10^{-6}$) on core damage frequency for sequence No. 6 (see next section). This dependence was not considered in the OPRA flooding study. In a meeting with Duke Power,[2] it was clarified that calculations by Westinghouse for DPC show that without room cooling from the HVAC system it would take several days for overheating of the LPI pumps. BNL did not receive this calculation, but accepted this assumption.

2.3. Core Damage Sequences and System Modeling

2.3.1 The Accident Sequences

The accident sequences were developed in a manner similar to that in the internal events analysis.[1] A functional event tree (see Figure 2.2) with supporting logic (top level fault trees) for each function appearing on the functional event tree, and some simplified system fault trees were constructed for the turbine-building flooding analysis. The fault trees provide the major failure modes of the equipment used to mitigate the progress of the core damage sequences. They include separate subtrees for the possible failure of the system because the flood will exceed a certain critical level. The system fault trees include a transfer-in from these subtrees whenever a certain critical level can fail the equipment. For example, the failure of the service water system includes the event "flood exceeds critical level 2 (4 ft)," and this event is developed as a top event of a subtree to which all flood-initiating categories are input. In addition, the possible failures of flood-isolation measures or operator failing to initiate the isolation measures in time, are also included.

Eight event tree sequences initiated by a turbine building flooding are considered in the OPRA and are shown in Figure 2.2 (OPRA Figure 9-77); this review did agree with the event tree used in the OPRA.

2.3.1.1 Success Criteria

The success criteria used in defining the supporting logic for each function on the event tree (e.g., Qs, B, X, etc.) are similar to those used for the internal event analysis. However, the SSF system, consisting of the ASW and the makeup subsystems, was explicitly modeled into the supporting logic of the flooding event tree; it is used only as a recovery action in the internal event analysis.

The important success criteria used in the OPRA flooding analysis are:

1. RCP Seal Protection:

   - Either one HPI pump or SSF makeup required.

   - Component Cooling is assumed to be unavailable because of containment isolation following the Emergency Safeguard (ES) signal. The flooding emergency procedures direct the operators to actuate the ES channels 1 and 2 immediately after the flooding alarm.

   - If the RCPs are not tripped (another procedural action), seal failure will occur in one minute if not protected by seal injection. Otherwise, seal leakage will occur in about 30 minutes if seal injection fails.

2. RCP Pressure Relief:

   - In the case of a very large flood (represented in the OPRA by a flow rate equal to 300,000 gpm), it is assumed in the OPRA that because of the fast loss of MFW and EFW systems, the pressurizer PORV does not have sufficient relief capacity in about 80% of the cases. Therefore, the opening of one of the two SRVs is required. In all other cases the opening of PORV is sufficient to avoid a challenge to the SRVs.

   - Since the BNL review subdivides the large floods into two groups, i.e., very large flood 1 (flow rate >350,000 gpm) and very large flood 2 (flow rate between 170,000 and 349,000 gpm), the following success criteria were used:

     • one out of two SRVs for the "very large flood 1," and for 50% of the cases of "very large flood 2," and

     . PORV opening sufficient for all other cases.

3. RCS Integrity Loss:

   - Any stuck open SRV, or

   - seal failure.

4. RCS Inventory makeup:

   - One HPI pump or the SSF makeup pump.

5. RCS Heat Removal by Steam Generators:

   - One out of three EFW pumps or feedwater from the SSF Auxiliary Service Water (ASW) system. Note that the MFW is lost for all floods, and the EFW is also lost in practically all flooding-initiating events considered. This fact implies that the SSF ASW is a must (its actuation is a procedural action).

6. High Pressure Injection (HPI):

   - One HPI pump is sufficient for core cooling injection, or feed and bleed.

7. RCS Makeup Supply Maintained:

   - BWST must be available. Two cases are considered:

     • If LPSW is available, then RBSS is not required and BWST suffices for 12 hours.

     • If LPSW is unavailable, then RBSS is required by procedure and the BWST would be depleted in two hours.

8. Long-Term Cooling:

   - SSF ASW and RCS inventory makeup when RCS integrity is maintained.

   - High pressure recirculation (HPR), and either LPSW or SSF ASW when RCS integrity is breached or when in the feed and bleed mode.

To summarize, this review has accepted the success criteria given above, and the only modification was in the criterion (2); this modification is also given above.

2.3.1.2 The Main Sequences

The eight main sequences are shown in Figure 2.2. They start with one of the flood initiators. The first function considered is the seal injection. As the component cooling is assumed lost immediately following operator action to actuate the ESF, this function depends on whether HPI or SSF makeup is available. Thus sequence No. 8 is a seal LOCA sequence.

The next function affecting the progress of the accident is the RCS integrity. Thus, sequences 5, 6, and 7 are small-LOCA (SRV stuck open) sequences. If injection is not available, sequence 7 is obtained. If injection is successful but recirculation fails because the BWST is depleted by RBSS or other failures, sequences 5 and 6 are obtained.

If RCS integrity is maintained, the availability of steam generator (SG) cooling determines whether makeup or feed and bleed is required. If SG cooling is available, the RCS inventory makeup function is sufficient (sequence No. 1). If SG cooling fails, then feed and bleed is required. Failure of feed and bleed leads to sequence 4. Sequences 2 and 3 are the failure of long-term cooling, distinguishing between the early and late needs for HPR,

which depends on the availability of LPSW for the RBCS (failure of LPSW will require the RBSS and as a consequence the BWST is depleted faster). Again, in sequence 3, there are two contributions in the X36 functions: (1) early failure of ASW and (2) late failure of ASW. Even though both are called in the OPRA "long-term cooling," the first contributes to bin III and the latter (failure after approximately 12 hours or more) contributes to bin IV.

The "core-damage bins," referred to above, are the same as those used in the internal events analysis and a short description follows:

Bin I: Early core damage for sequences with loss of RCS integrity (LOCA).
Bin II: Late core damage for the above sequences.
Bin III: Early core damage for sequences in which RCS integrity is maintained.
Bin IV: Late core damage for the above sequences.

BNL did not change the main accident sequences. However, a split between the short-term (~2 hours) and late (~12 hours) components of X36 and X57 (long-term cooling) is more realistic; this split was used in the BNL review. As a consequence of this split, sequence No. 6 contributes to bins I and II, and sequence No. 3 contributes to bins III and IV; the contributions to bins I and III are dominant, as presented in Appendix B. Note that the eight sequences in Figure 2.2 were used in the BNL quantification for each sequence. After the minimal cut sets in each segment were obtained with the SETS code, the splits of the sequences 3 and 6 were performed.

2.3.1.3 Supporting Logic and Fault Trees

For each function of the flooding event tree a supporting logic was prepared in the OPRA and reviewed by BNL. The following comments pertain to the supporting logic given in Figures 9-78 to 9-83 in OPRA.

a. QS1: The failure probability of the operator in tripping the RCPs following a flood (HPRCPH) was made dependent on the flood category in the BNL review. For very large floods, the time available to trip the RCP is short (15 minutes) and a higher probability of failure was used.

b. QV1: The event "PORV insufficient" (RC66RVOF) and the operator action to open the block valve (RC4MVH) were made dependent on the flood category, according to the time available until the EFW is lost and the SRVs are challenged as follows:

VFL1 -- RC66RVOF1 = 0.8 and RC4MVH1 = 0.5
VFL2 -- RC66RVOF2 = 0.5 and RC4MVH2 = 0.3
FL -- RC66RVOF3 = 0 and RC4MVH3 = 0.2
FM -- RC66RVOF3 = 0 and RC4MVH4 = 0.1

c. B1: No modification was made in this review.

d. U1: No modification was made in this review.

e. Y: This function can be shown to correspond to the event of a loss of the LPSW system given by the top event SW01.

f. X: The intermediate events X11, X34, X36, X54, and X57 are directly used from the supporting logics. No change was made to the subtrees, but the events corresponding to lowering Lake Keowee and recovering the long-term cooling to SSF were explicitly added to the subtrees. In addition, the term HPI in X11 means "Interruption of the RCS makeup due to the failure of the HPI system."

In the system fault trees the following changes were made by BNL:

a. HP1 -- Failure of the HPSW elevated tank was added into a new AND gate with gate HP3A. Event SWHPSWF was changed to reflect HPSW hardware failure only.

b. EF1 -- No change was made.

c. SW01 -- No changes, apart from FLII which was changed to FL2II, the BNL corresponding flood category.

The OPRA used fault trees to model the various possibilities for a flood to reach the critical flood levels; these fault trees are given in Figures 9.91 and 9.92 of the OPRA. In this review, the same method was used; however, BNL added more flood categories and used a more detailed model to account for the various flood rates in cases of partial isolation. This modification, which is responsible for most of the differences between the BNL fault trees (Appendix C) and those of OPRA Figures 9.9.1 and 9.9.2, was performed by using the matrix given in Table 2.6 and the various flood rates given in Table 2.3. An example of the use of Table 2.6 is given here: if a large flood 1 occurs in the inlet of the condenser hotwell (FL1II) and any one of the intake valves fails to close (CCWMVC), this flood will have a flow rate equivalent to a large flood 2 (FL2); if the failure is in the outlet valves (CCWAVC), the resulting flood rate will be equivalent to a medium flood (FM).

Note that the trees do not include specifically the contribution of very large and large floods to the medium floods, after successful flood isolation. This is based on the assumption that only part of the backflow through the condensate coolers will be discharged through the break, because credit was given to continued LPSW and HPSW operation, which leads to the consumption of a part of the backflow rate before the rest is discharged through the break. Even if sequences including this "successful isolation" were included, assuming failure of the LPSW, the effect on core damage frequency would not be large (<10% of total CDF).

2.3.2 Quantification of the Core Damage Sequences

The quantification of the sequences, as discussed before, was performed with the SETS[13] code. The results are presented in Appendix B where the most important sequences in each core damage bin are described.

An additional event which appears in several sequences, the failure to maintain long-term suction to the SSF ASW, will be discussed next, before the presentation of the summary of the results.

2.3.2.1 Long-Term Assurance of ASW Suction

The sequences contributing to bins II and IV include a term for failure to maintain a long-term suction for the SSF ASW. The OPRA has analyzed this event separately, using the event tree shown in Figure 2.3. Table 9.41 of the OPRA provides the data used in their quantification. BNL reviewed this analysis and considers it to be a good representation of the main actions necessary to isolate the flood in the long term, and also to maintain long-term suction to the SSF ASW. A discussion of the top events in Figure 2.3 follows:

a. Operators will try to locate the flood early in the sequence. This, in fact, is called by the flooding emergency procedure.[12] The values used for the quantification of the probability of successfully locating a flood are reasonable for the time frame considered (more than 12 hours). The probabilities used in this review, which are basically the same as those used in the OPRA, are given in Table 2.7.

b. In general, the same chance exists for having a flood in any of the three units. However, ASW takes suction from unit 2. Thus, one can isolate the backflow through the condensate coolers in unit 3 (in unit 1, it is isolated automatically after a trip), and obtain the needed LPSW and ASW suctions from the unit 2 crossover pipe. F13 separates out the fraction of floodings occurring in unit 2 from that of units 1 and 3, in order to account for the additional flood isolation possibilities in units 1 and 3.

c. The unisolable (N type) floods cannot be isolated in any of the three units; this is reflected in Table 2.7 where a value of 1.0 is used for all floods except FMN. The FMN flood includes some smaller floods with flow rates, which apparently OPRA considered to be isolable without need to lower the lake, and used a value of 0.8 in this case.

   It is assumed in OPRA that isolation of breaks in the outlet side of the condenser (type IO) can be made without interrupting flow to the crossover pipe where ASW and LPSW take suction. The manual condenser inlet valves are assumed by BNL to be a possible isolation measure. However, if the flood is on the inlet side of the condenser, the inlet isolation valve may be affected, or access to it would be difficult. This may explain the value of 1.0 used by OPRA in this case. Thus, isolable floods (inlet or outlet sides) in units 1 and 3 can be isolated by manually terminating the backflow; in unit 2 the outlet side floods can be isolated without need to lower the lake.

d. For CM12, defined as core damage in unit 1 or 2 affecting operator actions in unit 3, BNL calculated its own fractional conditional probabilities as shown in Table 2.8. The main differences in the CM12 probability calculated in this review (Table 2.7) and those in the OPRA (Table 9.41) are:

   FVLN: The value of 0.18 in the OPRA is much higher than the BNL values (0.09 and 0.07).

FVLI: The value used in the OPRA (2.2E-4) is much lower than the ones calculated in this review (8.0E-3, 6.0E-3).

FMN: The BNL value is smaller. In the review, only early core damage is considered for CM12, because the late core comes mostly from lowering the lake.

e. For FCI/$\overline{CM12}$ and FCC2, a value of $5x10^{-3}$ was apparently used in OPRA. BNL considered that the actions required to replenish the refueling pool (SFMPPSH = 0.01) and the elevated tank for HPSW (REHSTK = 0.01) to be similar to the actions required to maintain ASW suction such as FCC2 and FCI. Thus, a probability equal to 0.01 was used for FCI/$\overline{CM12}$ and FCC2. This change resulted in an increase in some of the late core damage sequences in the BNL review (in particular the FMN sequence No. 1B in Appendix B).

The BNL results for the probability of failure to maintain suction to long-term ASW is shown in the last column of Table 2.7. Note that in some sequences in the OPRA, the value used for the probability of maintaining long-term ASW suction is wrongly taken from other flood initiators (e.g., sequence 3, page 9-278, or sequence 5, page 9-281).

2.3.2.2 The Results of the Core Damage Sequences Quantification in the BNL Review

The results from Appendix B are summarized in Table 2.8. This table presents the core damage for each flood-initiating event category and the frequencies for each flood category by bin, and the total core damage frequencies. It is seen that FVL2N, rupture of one of the condenser outlet pneumatic valves, is a main contributor to the early core damage frequency (LOCA type). FMN, corresponding to a medium rupture of the above valve and installation errors in one of the unisolable manways, is a main contributor to the late core damage frequency. Large floods are the main contributors to the early core damage in bin III (non-LOCA sequences).

Table 2.9 is a summary of the BNL results and a comparison with the OPRA. It is seen that the BNL review results in about the same core damage frequency as that in the OPRA. Even the breakdown into the four bins is quite similar if the OPRA core damage frequency for the very large flood ($1.9x10^{-5}$), allocated to bin III, is moved to bin IV, which is more appropriate and was done in this review.

The only differences are found in the specific flood categories, mainly the large floods in which BNL grouping has made some differences.

In evaluating the detailed results, the following comments can be made:

a. The BNL assumption, according to which a lower probability of SRV challenge can be used for FVL2 than for FVL1, has reduced the main sequence by 10%. BNL believes its assumption is realistic because in OPRA a flow rate of 300,000 gpm was used to characterize a flood initiator which is dominated by a 170,000-gpm flow rate.

b. The OPRA way of combining both inlet and outlet isolable floods for the very large category (FVL1) is appropriate. The only difference between the inlet and outlet floods in this case is in the long-term core damage sequences. However, their main contribution is to the early core damage, so that this BNL grouping made no difference in core damage frequency.

c. The introduction by BNL of the large flood group 1 (FL1), which can reach critical level 3, has led to a moderate increase in early core damage in bin I. This is the reason that BNL calculated a higher core damage frequency of large floods in bin I. However, this effect is small compared to the main contribution coming from the very large floods. Thus, the less detailed grouping made by OPRA seems to be adequate.

d. The treatment of the Class II in OPRA is somewhat on the conservative side, because for the FLII, FMII, and FMIO, the OPRA did not consider the probability of a successful isolation of the inlet and outlet valves. Part of the reduction in the BNL value for this class stems also from the flood grouping which transferred some of the flood contributors from FL2N to FMN in the BNL reevaluation.

e. The same reasons stated in (d) above pertain to the small reduction in the large flood contribution to bin III seen in the BNL results.

f. As discussed before, the CM12 and the assumption on the failure probability of the operator actions to assure long-term suction are higher in the BNL reevaluation, leading to an increase in the FMN contribution in bin IV.

2.3.3 Analysis of Additional Flood Sequences

2.3.3.1 Other Turbine Building Flood Sequences

The OPRA analysis concentrated on the flood sequences in the turbine building that originated in the CCW system. Only the parts of LPSW and HPSW that directly connect to the CCW have been considered in that analysis. The piping and valves in those systems themselves were not considered in the main study, but a scoping estimate of their contribution was made as described in the OPRA, Sections 9.5.3.5, 9.5.3.6, and 9.5.6.1. OPRA also found that EFW floods cannot reach critical level 1 and that LPSW and HPSW floods have a small contribution that was neglected.

The contribution of the LPSW can be easily derived, because all sequences corresponding to breaks in the LPSW are developed (see Appendix B) and only the frequency of the flooding initiators in the LPSW needs to be appropriately increased by the additional flooding frequency stemming from the system piping downstream of the pumps, i.e., the portion not considered in the main study.

The frequency of the LPSW breaks is derived on the basis of operating experience of four events in 436 turbine-building-years resulting in 9×10^{-3} per year. Because most plants have two service water systems, this frequency was split equally between the HPSW and LPSW systems. However, in all four cases the floods were small, i.e., floods larger than 12,000 gpm were not

experienced up to 1981. Thus, the frequency of the flood was estimated to be 10% of the total, i.e., $LPSW_{FLOOD} = 4.5x10^{-4}$. On the basis of the LPSW piping diameters OPRA estimates that flood rates less than 45,000 gpm can develop which all contribute to the medium flood category. BNL assumed, in addition, that these floods occur in the inlet side of the condenser, i.e., they can be isolated from the CCW discharge lines; thus, these floods should be added to the FMII category (not to the FMN category as used in the OPRA).

Then, BNL accounted for the floods by adding this initiator frequency to that of the floods from the suction side of LPSW of unit 3, i.e., this frequency was added to the sequences including events FMII*M11F in Appendix B. Therefore, the mean value for $M11F_{NEW}$ is obtained by

$$FMII \cdot M11F_{NEW} = FMII\ (8.0x10^{-3}) * M11F_{OLD}(0.034) + LPSW_{FLOOD}(4.5x10^{-4}) =$$

$$= 7.2x10^{-4},$$

and

$$M11F_{NEW} = 0.09.$$

Using this new value for M11F, i.e., $M11F_{NEW}$, the additional LPSW contribution to core damage becomes:

Medium Floods --	bin I	$= 3.5x10^{-7}\ yr^{-1}$
	bin II	= -- yr^{-1}
	bin III	$= 3.4x10^{-6}\ yr^{-1}$
	bin IV	$= 1.1x10^{-6}\ yr^{-1}$
	Total	$= 4.8x10^{-6}\ yr^{-1}$

The OPRA assumed for the HPSW that the flow rates cannot exceed 20,000 gpm if a break in the piping of the system occurs. Thus, only 5% of the frequency was assumed to be in this break size resulting in a frequency of $2.3x10^{-4}$ per year for an HPSW-originated flood. However, this flood does not exceed critical level 1, and LPSW is available from unit 3 with some backup from unit 2 (part of the HPSW breaks may affect the LPSW in unit 2). Therefore, an HPSW flood does not create a challenge to unit 3 which is significantly more severe than the loss of all feedwater which was considered in the FMII category; the initiator frequency in this class, FMII, is more than one order of magnitude larger than the HPSW floodings ($8x10^{-3}$ per year compared to $2.3x10^{-4}$ for HPSW). Its contribution is therefore covered by the FMII sequences.

2.3.3.2 Auxiliary Building Flooding

A less detailed analysis of the auxiliary building floods was performed in the OPRA. The flood-initiating events were identified by using engineering judgment to locate critical areas of the auxiliary building and then determining initiating events that could affect the critical areas. Several critical areas were identified, of which it was judged that the equipment room and the HPI pump room would have the largest potential for producing important accident sequences in the auxiliary building.

The HPI pumps are located in the basement of the auxiliary building and share the room with low- and high-activity waste tanks. The floor drains in the auxiliary building lead to these tanks. Thus, flooding at higher elevations is likely to cause the tanks to overflow and flood the HPI pump room. A flood height of several feet of water is required to flood the HPI pump motors.

The LPI pumps are located in a room next to the HPI. Flooding of both rooms is not independent because direct paths are available for the water to propagate between the rooms. Thus OPRA concludes that any major flood in the auxiliary building could flood both the HPI and LPI pumps.

The equipment room is located high up in the auxiliary building and can be affected only by local flood sources which are limited. However, it includes redundant cabling required for safe shutdown such as the 600-V and 208-V switchgear for all ES loads (fail the redundant safety equipment). Its effect on CDF is smaller than that of a flood in the HPI room, mainly because the frequency of flooding of this room is more than two orders of magnitude smaller. Note that in the HPI room case any large flood in the auxiliary building will affect the HPI room, while only local floods can affect the equipment room.

The frequency of the flooding in the auxiliary building is based on two events, one in Browns Ferry 3 (4/78) and one in TMI-2 (3/79) in which a flood of several tens of thousands gallons occurred. When this is evaluated from two events in 375 auxiliary building years (up to 1981), a mean frequency of 5.3×10^{-3}/yr was obtained in OPRA. Then, a judgment was made that only 20% of this frequency is applicable to the HPI pump room situation in Oconee. The HPI room flooding frequency is therefore 1.1×10^{-3}/yr, which is considered reasonable by BNL.

From this point, the OPRA does not provide any additional details on alarms, operator procedures, timing, and accident sequences. It is only stated that from a review of the sequences for the modified plant (Appendix D.4.5 of OPRA), it is estimated that the flooding of the HPI pump room, given the above frequency of 1.1×10^{-3}/yr, would contribute less than 15% to the total core damage frequency due to internal flooding. There is not sufficient information available in the OPRA to review this estimate.

2.4 Summary

BNL has conducted a thorough review of the OPRA turbine building flooding study. The review was based on the reevaluation of the entire study. The following steps were treated, and modifications were made to them as found appropriate:

- Identification of the flooding sources.
- Review of the critical flood levels and equipment failure (by a walk-through).
- Grouping of the flood initiators into flood categories related to the critical flood levels.

- Inclusion of the modified plant additional features.

- Evaluation of the success criteria and the flooding main event tree.

- Review of all the supporting logic and the simplified fault trees as well as reconstruction of subtrees for the flooding critical levels.

- Review of the data.

- Review of the model for maintaining long-term ASW suction.

- Requantification of the accident sequences with the SETS code.

- Review of the core damage sequences on a sequence by sequence basis.

In some of the above steps, modifications were made by BNL; however, as the results indicate, their overall effect on the total core damage frequency is very small. This is because the OPRA model has appropriately accounted for all the above steps.

The main results of the review efforts were discussed earlier in Section 2.3.2 and are summarized here:

a. The total core damage frequency for floods from sources in the plant calculated in this review is equal to 9.7E-5/yr, i.e.:

   Turbine building CCW floods: 8.0E-5/yr (OPRA = 8.8E-5/yr).

   Other floods in turbine building: 4.8E-6/yr.

   Auxiliary building floods: 1.2E-5/yr (OPRA = 1.3E-5/yr).

Note that the OPRA has done some analysis for the other floods in the turbine building and for the auxiliary building floods. However, in their final results, they fail to present the core damage frequency contribution from these sources. In this review, they were added to the turbine building CCW floods, the major contributor to core damage frequency from internal floods.

b. The major difference between the BNL review and the OPRA appears in bins III and IV. This difference is due to the fact that, in the opinion of the reviewers, the OPRA has assigned a sequence with frequency equal to 1.9E-5/yr to bin III (early core damage) when it should have been assigned to bin IV (late core damage).

c. A main contributor to the medium floods in the BNL reevaluation is failure of proper reinstallation of equipment or manways following maintenance actions. In the OPRA, the main contribution to this category comes from medium rupture of the condenser outlet valves.

d. A scoping assessment of the uncertainties about the frequency of core damage for internal flooding was performed and the results are presented in Table 2.11.

2.5 References

1. Oconee PRA - "A Probabilistic Risk Assessment of Oconee Unit 3," NSAC/60, June 1984.

2. Meeting at DPC headquarters (Participants: DPC, NRC, BNL), June 14, 1985.

3. "Oconee Final Safety Analysis Report," Duke Power Company.

4. Thomas, H. M., "Pipe and Vessel Failure Probability," Reliability Engineering, Vol. 2, pp. 83-124.

5. "Reactor Safety Study - An Assessment of Accident Risks in U.S. Commercial Nuclear Power Plants," WASH-1400 (NUREG-25/014), 1978.

6. Bason, S. L. and Burns, E. T., "Characteristics of Pipe System Failures in Light Water Reactors," EPRI NP-438, August 1977.

7. Anderson, O., "Failure Characteristics of Oil and Gas Pipelines," Second National Conference on Reliability, Birmingham, 1979.

8. Bush, S. H., "Reliability of Piping in Light Water Reactors," IAEA Symposium, Vienna, 1977.

9. Hubble, W. H. and Miller, C. F., "Data Summaries of Licensee Event Reports of Valves at U.S. Commercial Nuclear Power Plants," NUREG/CR-1363, June 1980.

10. Ilberg, D. et al., "A Review of the Shoreham Nuclear Power Station PRA," NUREG/CR-4050, June 1985.

11. "Nuclear Power Experience," NPE, Petroleum Information Corporation, Denver, Colorado, August 1981 issue.

12. Worrell, R. B. and Stack, D. W., "A SETS User's Manual for the Fault Tree Analyst," NUREG/CR-0465, November 1978.

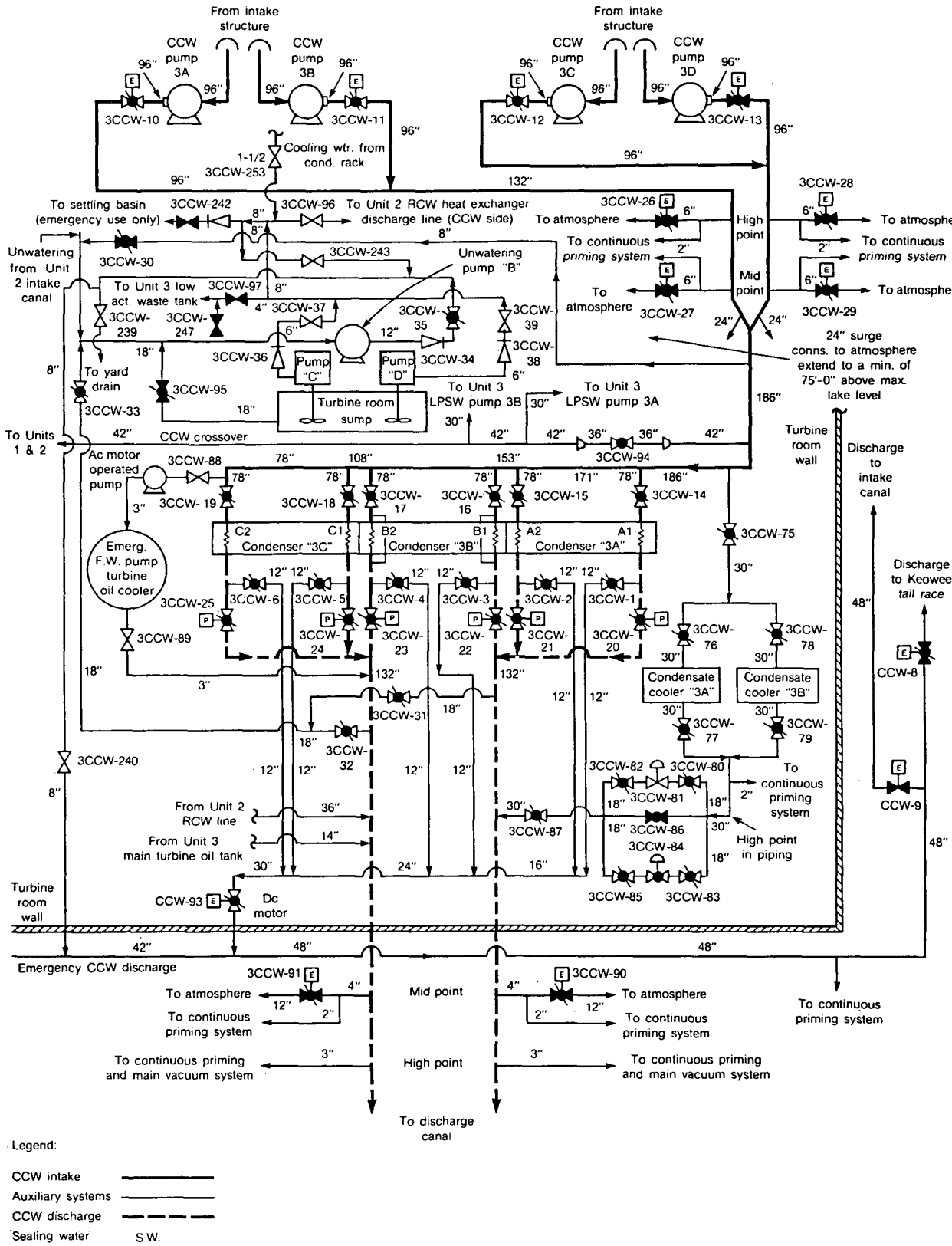

Figure 2.1 **Schematic of the CCW system.**
(OPRA Figure 9-58)

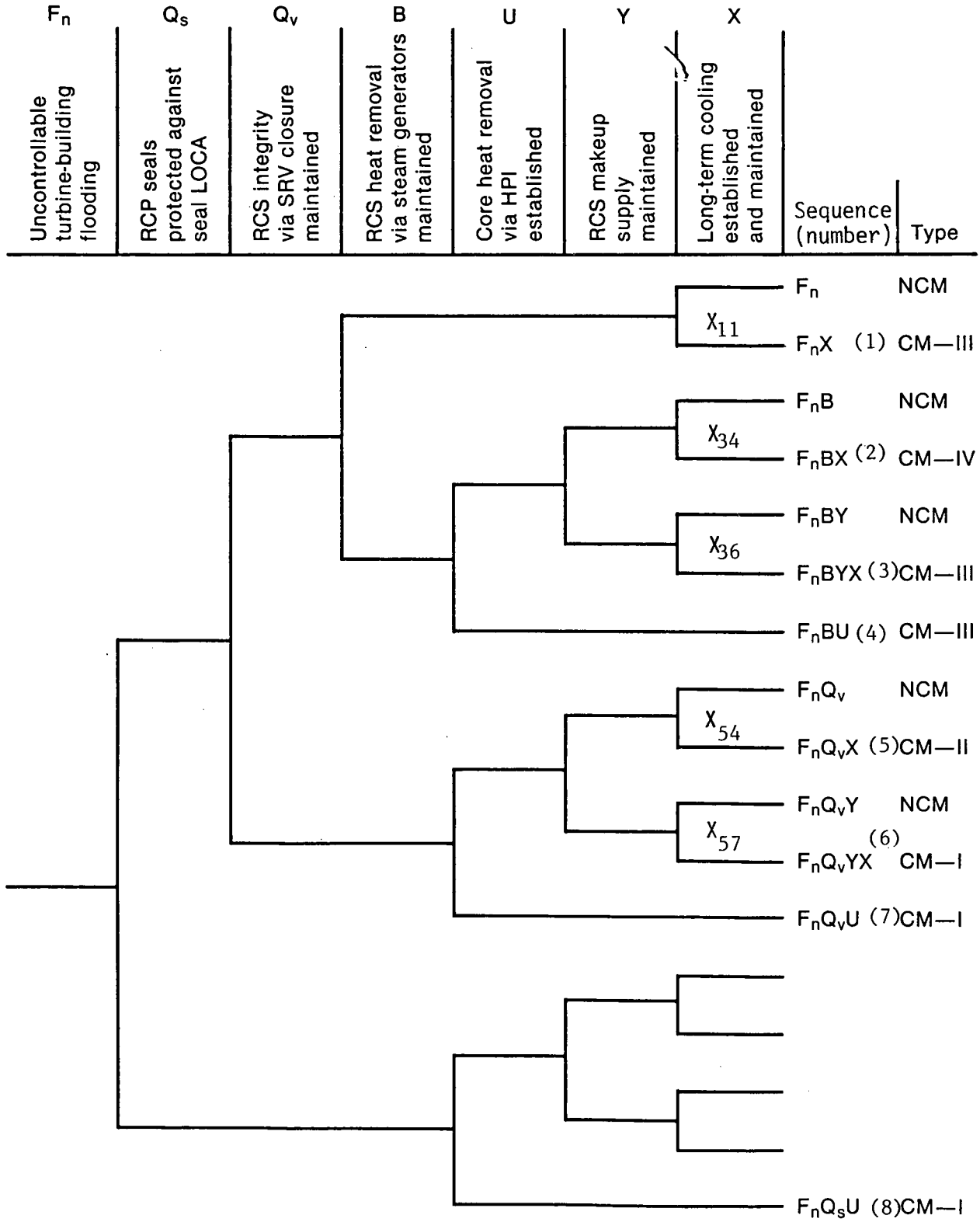

Figure 2.2 **Event tree for sequences initiated by turbine-building flooding.**
(OPRA Figure 9-77)

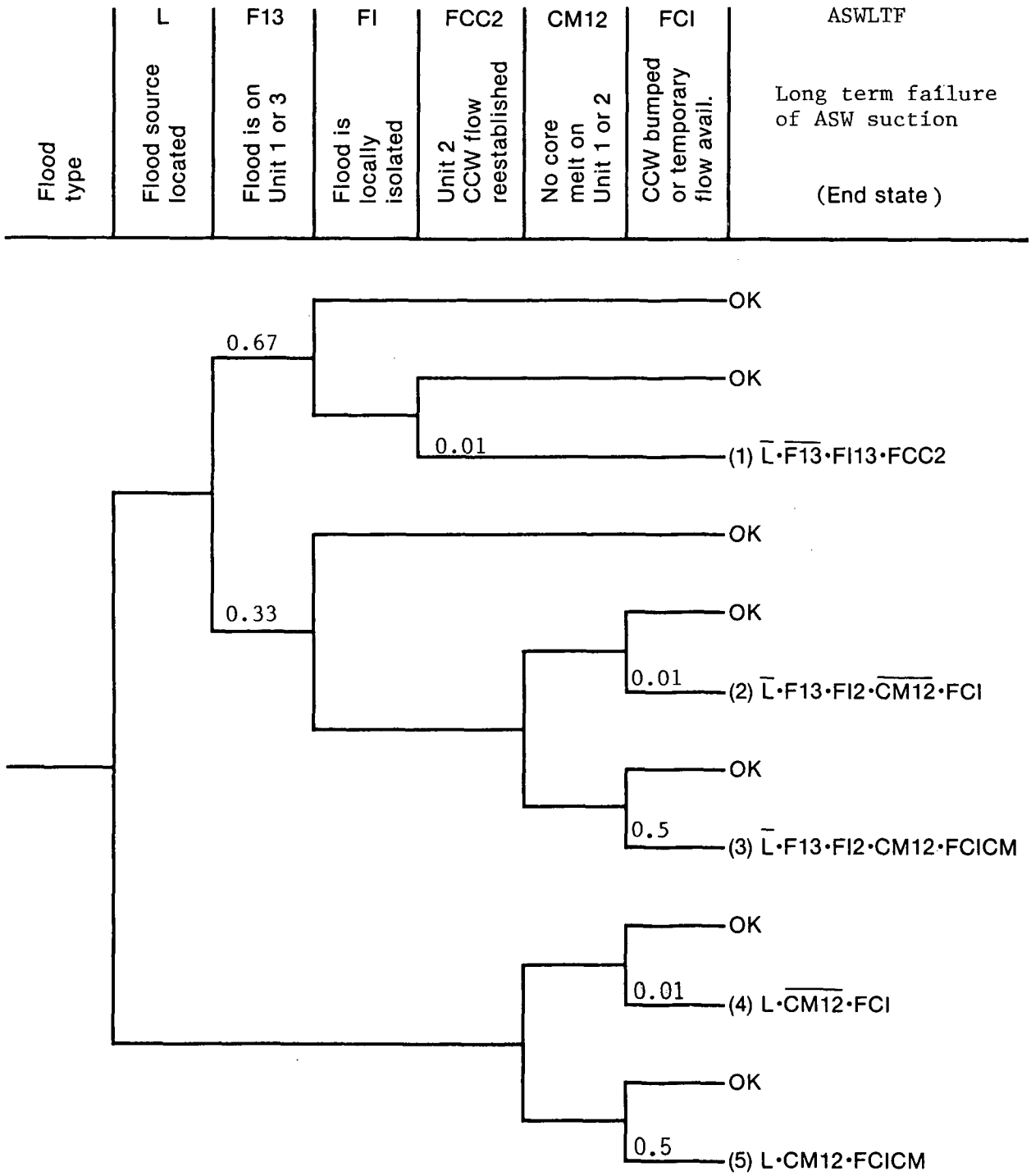

Figure 2.3 **Event tree for failure to maintain long-term SSF ASW suction after a flood.**
(OPRA Figure 9-93)

Table 2.1 Key Events Occurring at Four Critical Elevations in the Turbine Building (Modified Plant)

Initial Level (approximately 0.5 ft) -- Elevation 775.5

- Flood alarm
- Hotwell pumps fail
- Electrical loads powered from MCCs on elevation 775 of the turbine building are lost

First Critical Level (approximately 2 ft) -- Elevation 777

- Main feedwater pumps fail
- Condensate booster pumps fail
- Motor-driven EFW pumps fail
- Steam-driven EFW pump fails
- RCW pumps fail
- Instrument-air compressors fail
- Chilled-water pumps fail
- HPSW jockey pump fails

Second Critical Level (approximately 4 ft) -- Elevation 779

- LPSW pumps fail
- HPSW pumps fail

Third Critical Level (approximately 6 ft) -- Elevation 781

- Water spills into the auxiliary building and when the flood level reaches ventilation ducts, flooding of the following pumps occurs:
  - HPI pumps
  - LPI pumps
  - Reactor Building (RB) spray pumps

Table 2.2 Time to Reach Critical Levels as a Function of Flood Flow Rate (in minutes)

Flow Rate (gpm)	Flood Level (ft)								
	0.5	1	2	3	4	5	6	7	8
12,000	30	120	∞						
25,000	15	50	100	∞					
40,000	10	25	50	120	∞				
60,000	8	17	35	55	160	∞			
75,000	5	12	30	45	90	∞			
100,000	3.8	9	20	30	55	80	∞		
120,000	3.5	7.5	16	25	40	55	90	∞	
150,000	3.0	6	12	20	28	40	55	70	∞
170,000	2.6	5.5	11	17	24	33	45	60	90
200,000	2.2	5	10	14	20	27	35	45	60
250,000	1.6	3.5	7	11	16	21	26	33	40
300,000	1.4	3	6.2	9	13	17	21	26	32
350,000	1.2	2.5	5.3	8	11	15	18	22	27
375,000	1.1	2.3	4.8	7	10	13	16	20	24
450,000	1.0	2.0	4.0	6	8.5	11	13.5	16	19

Table 2.3 Sources of Turbine-Building Floods at Oconee - BNL Review (flow rates in gpm)

Flood Source	Elevation (ft)	Break Size D	Before Modification BNL	Before Modification OPRA	Modified Plant	Any One of Pneumatic Valves Fails to Close	Relay Failures: All Pneumatic Valves Fail	Particular Valve to Break Fails	Any One of Intake Valves Fails to Close
CCW Condenser Inlet:									
Pipe sections (18)	780	78"	465,000[1]	450,000	19,000	120,000	350,000[1]	120,000	333,000[2]
Manual butterfly valves (18)	780	78"x14	180,000[2]	160,000	19,000	104,000	172,000	104,000	176,000
Rubber expansion joints (18)	780	78"x4.5	76,000[3]	76,000	19,000	60,000	72,000	60,000	72,000
Manways (54)	790	24"	35,000	23,000	13,000	32,000	35,000	32,000	35,000
Manways (3)	775	24"	56,000	23,000	20,000	50,000	55,000	50,000	56,000
CCW Condenser Outlet:									
Pipe sections (18)	780	78"	440,000	437,000	19,000	90,000	440,000	330,000	120,000
Pneumatic butterfly valves (18)	775	78"x14	175,000	175,000	21,000	80,000	175,000	175,000	104,000
Rubber expansion joints (18)	787	78"x4.5	56,000[3]	56,000	15,000	38,000	56,000	56,000	45,000
Manways isolable (54)	787	24"	33,000	23,000	13,000	30,000	33,000	33,000	32,000
Manways unisolable (6)	775	24"	50,000	23,000	19,000	48,000	50,000	50,000	50,000
CCW Emergency Discharge:									
Pipe sections (including 4 metal expansion joints)	795	12"	50,000	<10,000					
Pipe sections	790	30"	32,000	20,000	13,000	29,000	33,000	29,000	33,000
Pipe sections	790	24"	20,000	13,000	8,000	18,000	20,000	18,000	20,000
Manual butterfly valves	795	12"x16	7,000	<10,000					
CCW Crossover:									
Pipe sections (Unit 1 + 2)	775	42"	140,000	---	23,000	100,000	140,000	100,000	140,000
(Unit 3)		36"	103,000[4]	157,000					
Manual butterly valves (4)	775	36"x12	81,000[4]	105,000	22,000	62,000	69,000	62,000	69,000
Pipe section (Unit 1 + 2) LPSW suction	779	36"	103,000[4]	144,000	23,000	80,000	103,000	80,000	103,000
Pipe section (Unit 3) LPSW suction	775	30"	83,000[4]	109,000	23,000	65,000	72,000	65,000	72,000
MOV LPSW suction (5)	775	30"x12	68,000[4]	87,000	22,000	53,000	57,000	53,000	57,000
HPSW pump suction valves	779	20"	36,000	---	19,000	29,000	30,000	29,000	30,000
Unwatering Connections:									
Piping sections (inlet)	775	18"	27,000	27,000	21,000	27,000	21,000	27,000	27,000
Manual butterfly valves (inlet)	775	18"x4.5	14,000	14,000	11,000	14,000	11,000	14,000	14,000
Piping sections (outlet)	775	18"	20,000	20,000	20,000	20,000	20,000	20,000	20,000
Manual butterfly valves (outlet)	775	18"x4.5	10,000	10,000	10,000	10,000	10,000	10,000	10,000

Table 2.3 Continued

Flood Source	Elevation (ft)	Break Size D	Before Modification BNL	Before Modification OPRA	Modified Plant	Any One of Pneumatic Valves Fails to Close	Relay Failures: All Pneumatic Valves Fail	Particular Valve to Break Fails	Any one of Intake Valves Fails to Close
Condensate Coolers Inlet:									
Piping sections	780	30"	90,000	83,000	22,000	77,000	85,000	77,000	85,000
Manual butterfly valves	780	30"x12	55,000	67,000	19,000	50,000	54,000	50,000	54,000
Rubber expansion joints[3]	780	30"x4.5	44,000	25,000	18,000	41,000	44,000	41,000	44,000
Condensate Coolers Outlet:									
Piping sections	780	30"	90,000	70,000	65,000	84,000	85,000	84,000	85,000
Piping sections	780	16"	25,000	20,000	18,000	22,000	22,000	22,000	22,000
Manual butterfly valves (12)	780	30"x12	55,000	56,000	55,000	55,000	55,000	55,000	55,000
Manual butterfly valves (12)	785	18"x4.5	14,000	13,000	14,000	14,000	14,000	14,000	14,000
Control valves (6)	785	16"x4	11,000	10,000	11,000	11,000	11,000	11,000	11,000
RCW Connections:									
Inlet piping (from CCW crossover to RCW coolers):									
Piping sections	780	18"	34,000	31,000	10,000	34,000	34,000	34,000	34,000
Piping sections	780	12"	20,000[1]	14,000	10,000	20,000	20,000	20,000	20,000
Manual butterfly valves (2)	780	18"x4.5	14,000[2]	16,000	14,000	14,000	14,000	14,000	14,000
Manual butterfly valves (2)	780	12"x3.25	<10,000	<10,000					
Rubber expansion joints	780	12"x4.5	<10,000	<10,000					
Outlet piping (from RCW coolers to CCW discharge):									
Piping sections	775	36"	115,000	103,000	105,000	115,000	115,000	115,000	115,000
Piping sections	775	30"	80,000	72,000	68,000	80,000	80,000	80,000	80,000
Piping sections	780	24"	46,000	46,000	39,000	46,000	46,000	46,000	46,000
Piping sections	780	16"	21,000	20,000	18,000	21,000	21,000	21,000	21,000
Piping sections	780	12"	<10,000	<10,000					
Manual butterfly valves (4)	780	12"x3.25	<10,000	<10,000					
Manual butterfly valves (4)	775	36"x12	77,000	69,000	77,000	77,000	77,000	77,000	77,000
Manual butterfly valves in RCW discharge	775	30"x12	60,000	58,000	60,000	60,000	60,000	60,000	60,000
RCW/ASW discharge			20,000	---	20,000	20,000	20,000	20,000	20,000

Notes:

(1) Break flow is calculated from two sides of break (this note is marked in some cases only).
(2) Break flow is calculated only as coming from one side (this note is marked in some cases only).
(3) Value of flow rate taken from OPRA, because it was calculated Duke Power Company using a piping analysis computer code.
(4) BNL included the modifications in the CCW crossover in which valves CCW-40 and CCW-42 are normally closed, allowing flooding from one side of the break - coming only from the unit in which the flood was allowed to occur. OPRA higher values given in Table 9.31 are for the case of the unmodified plant.

Table 2.4 Categorization and Frequencies of Flood Initiators in OPRA and BNL Review

OPRA Categorization	OPRA Frequency (per year)	BNL Categorization	BNL Frequency (per year)
Very large flood		Very large flood 1	
Flow rate $\geq$ 160,000 gpm		Flow rate $\geq$ 350,000 gpm	
Represented by 300,000 gpm		Nonisolable--FVL1N	1.0×10^{-5}
Nonisolable FVLN	1.9×10^{-4}	Isolable inlet--FVL1I1	1.8×10^{-4}
Isolable FVLI	3.8×10^{-4}	Isolable outlet--FVL1I0	1.9×10^{-4}
		Very large flood 2	
		Flow rate $\geq$ 170,000 gpm	
		Nonisolable--FVL2N	1.8×10^{-4}
		Isolable inlet--FVL2I1	1.8×10^{-5}
Large flood		Large flood 1	
Flow rate 60,000 to 159,000 gpm		Flow rate 120,000 to 169,000	
Represented by 75,000 gpm		Nonisolable FL1N	3.8×10^{-5}
		Isolable inlet FL1I1	5.3×10^{-4}
		Isolable inlet FL1I0	5.5×10^{-4}
Nonisolable FLN	8.9×10^{-4}	Large flood 2	
Isolable inlet FL1I1	5.4×10^{-3}	Flow rate 60,000 to 119,000	
Isolable inlet FL1I0	5.7×10^{-3}	Nonisolable FL2N	4.1×10^{-4}
		Isolable inlet FL2I1	5.4×10^{-3}
		Isolable outlet FL2I0	5.1×10^{-3}
Medium flood		Medium flood	
Flow rate 12,000 to 60,000		Flow rate of 12,000 to 60,000	
Represented by 30,000 gpm			
Nonisolable FMN	1.7×10^{-3}	Nonisolable FMN	2.7×10^{-3}
Isolable inlet FMI1	7.1×10^{-3}	Isolable inlet FMI1	8.0×10^{-3}
Isolable outlet FMI0	7.2×10^{-3}	Isolable outlet FMI0	1.1×10^{-2}
Total Flood Frequency	2.9×10^{-2}		3.4×10^{-2}

Table 2.5 The Conditional Probabilities That a Flood Results From the Unit 3 LPSW or Condensate Cooler System

Flood Category	Conditional Probability			
	Condensate Coolers		LPSW	
	OPRA	BNL	OPRA	BNL
FL2II	L311F= 0.0054	0.005	L21F= 0.013	0.013
FMII	M321F= 0.012	0.042*	M11F= 0.031	0.034
FMN	M361F= 0.061	0.043	-	0.006

*The additional contribution in BNL comes from the condensate coolers expansion joints.

Table 2.6 BNL Selection[1] of Flooding Categories for the Flood-Isolation Failure Possibilities

Flood Category	Calculated Frequency (per year)	Intake Valve (CCWMVC)	Any Outlet Valve (CCWAVC)	Relay to All Outlet Valves (CWSRRVN)	Particular Outlet Valve (CC20AVC)	Isolation of Inlet And Outlet Valves
FVL1N	1.0×10^{-5}	+	+	+	+	+
FVL1I1	1.8×10^{-4}	+	FL1[2]	+	NA	FM
FVL1I0	1.9×10^{-4}	FL1	FL2	+	FVL2	FM
FVL2N	1.8×10^{-4}	+	+	+	+	+
FVL2I1	1.8×10^{-4}	+	FL2	+	NA	Isolated
FL1N	3.8×10^{-5}	+	+	+	+	+
FL1I1	5.3×10^{-4}	FL2	FM	FL2	NA	Isolated
FL1I0	5.5×10^{-4}	FM	FM	+	FL2	Isolated
FL2N	4.1×10^{-4}	+	+	+	+	+
FL2I1	5.4×10^{-3}	+	+	+	NA	Isolated
FL2I0	5.1×10^{-3}	FM	FM	+	+	Isolated
FMN	2.7×10^{-3}	+	+	+	+	+
FMI1	8.0×10^{-3}	+	+	+	NA	Isolated
FMI0	1.1×10^{-2}	+	+	+	+	Isolated

[1]Based on flow rate from Table 2.3 and dominant flood-initiating events from Table A.1.
[2]FVL1 -- Very large flood 350,000 to 450,000 gpm.
FVL2 -- Very large flood 170,000 to 349,000 gpm.
FL1 -- Large flood 120,000 to 169,000 gpm.
FL2 -- Large flood 60,000 to 119,000.
FM -- Medium flood 12,000 to 60,000.
+No change in flood category.

Table 2.7 Values for the Failure to Maintain Long-term SSF ASW Suction After Flood[a]

Flood-Initiating Event	Flood Source Located (L)	Flood Is Not Locally Isolated (FI) FI/F13	FI/F13	Failure to Sustain Long-Term ASW Suction (ASWLTF)
FVL1N	0.2	1.0	1.0	0.052
FVL2N	0.2	1.0	1.0	0.042
FVL1II	0.01	ε	1.0	0.006
FVL1IO	0.01	ε	ε	ε
FVL2II	0.01	ε	1.0	0.006
FL1N	0.05	1.0	1.0	0.019
FL1II	0.01	ε	1.0	0.0035
FL1IO	0.01	ε	ε	ε
FL2N	0.05	1.0	1.0	0.011
FL2II	0.01	ε	0.8	0.0027
FL2IO	0.01	ε	ε	ε
FMN	0.01	0.8	0.8	0.008
FMII	0.01	ε	0.8	0.0026
FMIO	0.01	ε	ε	ε

[a]See Figure 2.6 for event tree where these events are used.
[b]Other events in event tree in Figure 2.6:
FCC2 = 0.01 in all cases. FCI = 0.01, given no CM12. If CM12 occurred, FCI = 0.5.

Table 2.8 Core Damage Conditional Probabilities of the Various Flood Categories

Flood Initiators	Frequency (yr^{-1})	BIN I	BIN II	BIN III	BIN IV	Fractional Conditional Probability CM12*	Total Conditional Probability of Core Damage	Contribution of Flood Initiator to Core-Damage Frequency (yr^{-1})
FVL1N	1.0-5	0.14	-	-	0.10	0.09	0.24	2.4-6
FVL2N	1.8-4	0.11	-	-	0.08	0.07	0.19	3.4-5
FVL11	1.8-4	0.011	4.0-4	7.2-4	1.6-3	0.008	0.014	2.5-6
FVL10	1.9-4	0.010	1.3-4	7.4-4	1.2-3	0.008	0.012	2.3-6
FVL21	1.8-5	8.3-3	1.5-5	5.6-4	1.0-3	0.006	0.010	1.8-7
FL1N	3.8-5	0.040	-	-	0.040	0.027	0.080	3.0-6
FL11	5.3-4	4.4-5	6.-6	5.4-4	2.3-4	3.0-4	8.3-4	4.3-7
FL10	5.5-4	1.5-3	1.-6	2.5-5	1.0-4	7.5-4	1.6-3	8.8-7
FL2N	4.1-4	1.4-3	3.8-4	8.0-3	6.8-3	0.005	0.016	6.6-6
FL21	5.4-3	1.3-4	2.0-5	8.0-4	2.4-4	5.0-4	1.2-3	6.5-6
FL20	5.1-3	4.0-5	8.0-6	2.6-4	3.2-5	1.5-4	3.3-4	1.7-6
FMN	2.7-3	3.7-5	1.0-4	1.7-4	4.0-3	1.0-4	4.4-3	1.1-5
FM11	8.0-3	6.0-5	5.0-6	3.9-4	2.0-4	2.0-4	6.6-4	5.3-6
FM10	1.1-2	-	2.0-6	1.0-4	2.0-6	5.0-5	1.0-4	1.1-6
TOTAL	3.4-2						2.4-3	7.8-5

*CM12 is a conditional probability that given early core damage in unit 1 (unit 2), unit 3 would be in a non-core-damage state.

Table 2.9 Summary of Core Damage Frequencies for Turbine Building CCW Floods

Core Damage	Flood Initiator	OPRA Results	BNL Results
I	Very Large Flood	2.9E-5	2.5E-5
	Large Flood	2.6E-6	3.8E-6
	Medium Flood	6.6E-7	5.8E-7
	Total Bin I	3.2E-5	3.0E-5
II	Very Large Flood	ε	1.0E-7
	Large Flood	8.2E-7	2.8E-7
	Medium Flood	8.0E-7	3.2E-7
	Total Bin II	1.6E-6	7.0E-7
III	Very Large Flood	1.9E-5*	2.8E-7
	Large Flood	1.3E-5	9.2E-6
	Medium Flood	4.8E-6	4.7E-6
	Total Bin III	3.7E-5	1.4E-5
IV	Very Large Flood	ε	1.6E-5
	Large Flood	9.7E-6	6.1E-6
	Medium Flood	7.7E-6	1.3E-5
	Total Bin IV	1.7E-5	3.5E-5
TOTAL		8.8E-5	8.0E-5

*Binning error-- should be in Bin IV.

Table 2.10 BNL Review Summary of Core Damage Frequencies for Floods from Sources Within the Plant
Total CD Frequencies = 9.7E-5

	Turbine Building		Auxiliary Building Floods*
	CCW Floods	Other Floods	
Bin I	3.0E-5	3.5E-7	4.5E-6
Bin II	7.0E-7	-	1.1E-7
Bin III	1.4E-5	3.4E-6	2.1E-6
Bin IV	3.5E-5	1.1E-6	5.3E-6
TOTAL	8.0E-5	4.8E-6	1.2E-5

*Assumed to be 15% of the core damage frequency for CCW floods (see OPRA, page 9-285).

Table 2.11 BNL Review Core Damage Frequency Distribution for Floods from Sources Within the Plant

Bin	X_{05}	X_{50}	Mean	X_{95}
I	3.2E-6	1.6E-5	3.4E-5	1.2E-4
II	3.2E-8	2.6E-7	7.5E-7	2.5E-6
III	1.2E-6	7.2E-6	1.7E-5	5.9E-5
IV	2.1E-6	1.5E-5	3.9E-5	1.5E-4
Total CD	1.3E-5	5.2E-5	9.1E-5	2.8E-4

3. REVIEW OF SEISMIC EVENTS

3.1 Introduction

The Oconee Probabilistic Risk Assessment (OPRA) provides a detailed analysis of the effects of seismic events as described in Section 9.1 and Appendix J of the OPRA. In the OPRA, the seismic contribution to the core damage frequency was evaluated in the following four steps:

1. The Oconee site was evaluated to obtain the seismic hazard in terms of the frequency of occurrence of ground accelerations.

2. The capacities of important plant structures and equipment to withstand earthquakes were evaluated to determine conditional probabilities of failure as a function of ground acceleration.

3. The event tree and fault tree models developed for the internal initiating events were modified to reflect plant response to seismic events. These modified logic models were then solved to obtain Boolean expressions for the seismic event sequences of interest.

4. The Boolean expressions were quantified by convolving the probabilistic site seismicity and the fragilities for the plant structures and equipment obtained in steps 1 and 2.

Jack R. Benjamin and Associates, Inc. (JBA) was retained by BNL to perform a preliminary review of the OPRA for the effects of seismic events. JBA was the main contributor to this section, with participation of the:

- BNL/Risk Evaluation Group for the review of event tree and fault tree models with the generation of the Boolean expressions for the seismic sequences, and

- BNL/Structural Analysis Division for a qualitative review of Appendix J--Annex J3 of the OPRA: "Seismic Fragility Curves for Jocassee Dams and Oconee Dikes," prepared by Danielle Veneziano, June 1981.

The JBA review focused on the following sections of the OPRA:

- Section 9.1: "Analysis of Seismic Events"

- Appendix J - Annex J1:

  "Seismic Ground Motion Hazard, Oconee Nuclear Power Plant Site, Oconee, South Carolina, prepared by Law Engineering Testing Company, May, 1981.

- Appendix J - Annex J2:

  "Conditional Probabilities of Seismic Induced Failures for Structures and Components for Oconee Generating Station Unit 3," prepared by Structural Mechanics Associates, September 1981.

It is our understanding that the seismic fragility analyses for the PRAs published to date by Structural Mechanics Associates were performed in the following order:

Zion
Indian Point, units 2 and 3
Oconee, unit 3
Midland
Limerick
Seabrook
Millstone, unit 3

Thus the OPRA is older than the PRAs conducted for Seabrook and Millstone. This is particularly pertinent to the approach adopted for the interface between the seismic hazard and fragility data as discussed in Section 3.2. In terms of the general approach, the OPRA is similar to the PRAs conducted for Zion[1] and Indian Point.[2] These three PRAs differ from the PRAs listed above in the manner in which the hazard curves are defined, and the way in which duration factors, ductility factors, etc. are incorporated. This is discussed further in Section 3.2.

The review of the OPRA focused on the critical issues which may significantly affect the results. In contrast to the review of the Zion and Indian Point PRAs, which consisted of an in-depth evaluation of each section and subsection of the PRA report,[3,4] this review focused primarily on critical areas which may affect the mean frequency of core melt. The reader is directed to References 3 and 4 which give specific comments on the report sections of the Zion and Indian seismic fragility analyses, respectively. Many of those comments also generally apply to the OPRA since the fragility reports for all three PRAs were performed at approximately the same time and are very similar.

In the review of the OPRA, an attempt was made to look for both conservative and unconservative assumptions which could significantly affect the results. To help the reader, an effort is made to indicate, where possible, the ultimate impact of the issues which have been raised. Comments are primarily directed to the mean frequency of core melt or to the individual sequences which contribute significantly to core melt. The following scale has been adopted to quantify comments made in the review of the OPRA:

Comment	Effect on Mean Frequency of Core Melt
Small	Factor $<$ 2
Moderate	2 $\leq$ Factor $<$ 10
Large	Factor $\geq$ 10

The methodology used in the OPRA for seismic effects is appropriate and adequate to obtain a rational measure of the probability distribution of the frequency of core melt. The results from the OPRA are useful in a relative sense and should not be viewed as absolute numbers. The procedure used to quantify seismic risk is based on simple probabilistic models which use some data, but currently rely heavily on engineering judgment. The analysis does not include a comprehensive consideration of design and construction errors

and, hence, may be biased (note that errors may be either conservative or unconservative). Because of the newness of these types of analyses and the limitations pointed out above, the results are useful only in making relative comparisons. Although more sophisticated analytical models exist, the limitation of available data dictates that the simple models used in the OPRA are in a practical sense at the level of the state of the art; note that some improvements have been made in more recent seismic PRAs as discussed below. Concerns about the basic data used in the seismic PRA analysis are discussed in the following sections.

3.2 Seismic Hazard

3.2.1 Review Approach

A critical review was conducted of Annex J1 of the OPRA which describes the methodology and assessment of the seismic ground motion hazard at the Oconee site. Section 9.1 of the OPRA summarizes the seismic risk methodology and the results of the probabilistic seismic hazard analysis. To assist in the review, the services of a consultant, Professor Pradeep Talwani, were retained by JBA to review Annex J1 from the seismologist's viewpoint. Professor Talwani's report is provided in Appendix D to this review, while important points are incorporated in the body of this report.

As part of the review, the interim results of USNRC research performed by Lawrence Livermore National Laboratory (LLNL), the Seismic Hazard Characterization Program (SHCP),[5] are used. Although specific probabilistic estimates for the Oconee site are not available, seismic source zone characterizations and seismicity parameter estimates are provided by the experts who participated in the SHCP. These data are used for comparison with the Oconee seismic hazard analysis. In addition, the results of the U.S. Geological Survey (USGS) seismic hazard calculations for the contiguous U.S. also provide a basis for comparison.[6]

The review of the seismic hazard analysis in the OPRA concentrated on a number of issues. To begin, the adequacy and appropriateness of the analysis approach to estimate the probability distribution on the frequency of ground motion is considered in Section 3.2.2. Individual elements of the seismic hazard analysis, including seismotectonic zones, seismicity parameters, and the ground motion characterization, are reviewed in Sections 3.2.3 to 3.2.5, respectively. Review comments on the hazard/fragility interface approach are discussed in Section 3.2.6. In Section 3.2.7 the results of the Oconee hazard analysis are briefly compared with those of the USGS. As part of our review, we performed seismic hazard calculations to verify the hazard estimates reported in the OPRA and to consider the effect of our review comments on the results. The insights and findings from these calculations are reported in Section 3.2.8. Concluding remarks are given in Section 3.2.9.

As pointed out in Section 3.1, the OPRA is an older PRA; the seismic hazard analysis was performed in late 1980 and completed in May 1981. Since that time there have been significant developments in the methods used to conduct probabilistic seismic hazard studies.[5,7] In addition, there is a greater availability of scientific data and hypotheses on the mechanisms that cause earthquakes in the eastern U.S.,[5,7-9] and a greater body of experience in performing these studies.[10-12] Similarly, there has been further work in

ground motion attenuation models. In comparison, the general approach used in the Oconee seismic hazard analysis is similar to that used in other seismic PRAs listed in Section 3.1, in particular, the Zion and Indian Point studies.[1,2]

The review of the Oconee seismic hazard assessment focused on important elements of the analysis that may significantly affect the results. It is particularly important to determine that accurate and up-to-date information was used in the study (available at the time the study was performed), and to evaluate the adequacy and appropriateness of the seismic hazard results.

3.2.2 Seismic Hazard Methodology

The seismic hazard analysis methodology used in the OPRA follows well-established procedures for evaluating the frequency of exceedance of ground shaking.[13-15] The basic steps in the analysis are:

- Collection of historical seismicity data, geophysical, geologic, and tectonic information.
- Establishment of seismic source zones based on available data and expert input regarding causative mechanisms of earthquakes.
- Development of seismicity parameters that describe the spatial and temporal frequency of earthquake occurrences (i.e., maximum magnitude, b-values, activity rates).
- Selection of a method of characterizing ground shaking and corresponding ground motion attenuation models.
- Solicitation of expert opinion regarding alternative approaches to model the occurrence of seismic events and the intensity of ground motion for each of the above steps.
- Solicitation of expert probability assignments that characterize the degree-of-belief in each alternative for each hypothesis.
- Calculation of the frequency of exceedance of ground motion per year for the family of seismic hazard modeling alternatives.
- Aggregation of the results to establish the probability distribution on the frequency of exceedance.

The use of this procedure in the Oconee seismic PRA to evaluate the ground-shaking hazard at the plant site is considered appropriate and adequate.

In actual application, the analyst has considerable latitude in defining how each step in the analysis is performed and to what level of detail. For example, the analyst controls the selection of experts, the method of soliciting expert opinion, and the degree of documentation in reporting the study results. Overall, the seismic hazard analysis used in the OPRA is the same methodology used in previous PRAs submitted to the USNRC.[1,2,10-12] The

adequacy of individual aspects of the analysis is discussed in subsequent sections.

Soliciting Expert Opinion

To a large extent, seismic PRAs and seismic hazard analyses in particular rely a great deal on expert judgment to estimate the value of key parameters and to assess the uncertainty in such estimates. Thus, an integral part of the analysis is associated with soliciting expert input and quantifying subjective judgments. For the most part, an ad hoc approach has been taken in past seismic PRAs in soliciting expert opinions and in establishing subjective probability weights. Among the generally recognized inadequacies associated with this type of approach are the arbitrary assignment of subjective probability weights, failure to identify the sample space of key random variables (i.e., range of possible values), bias, miscalibration, lack of coherence in expert statements, and failure to adequately assess the uncertainty in expert judgments, among other potential problems. We suspect that the OPRA suffers from a number of these problems, although it is difficult to establish this quantitatively. In comparison, however, the approach used in the OPRA is similar to that in previous studies. In this review, the following three aspects of the process of soliciting expert judgments and subjective probabilities are considered:

- Methodology - approach used to solicit and combine multiple expert input,
- Application - how the methodology was applied, how many experts were used, and
- Documentation - completeness in reporting the results of the study.

Within the context of these broad categories, comments on the approach used in the Oconee seismic hazard analysis are discussed below.

The Oconee study does not provide a specific discussion of the method used to quantify the uncertainty in key aspects of the hazard analysis. For an uncertain parameter in the analysis, alternatives are defined and subjective probability weights are assigned. There is no definitive discussion of the approach taken to identify alternative hypotheses or to assign subjective probabilities. From previous experience in reviewing seismic PRAs, the Oconee study uses an ad hoc approach which, at a minimum, suffers from a lack of a systematic, coherent method of quantifying subjective judgments. At worst, subjective probability assignments estimated in this way could be an inappropriate characterization of the professional uncertainty in the seismic hazard. Although it is true that the state of the art in this area is advancing rapidly, nonetheless, a clear presentation of the approach used should be provided.

In the seismic hazard analysis report, limited documentation is provided regarding the assessment of subjective probabilities assigned to alternative model hypotheses. Specifically, little or no information is available on the following:

- the experts (i.e., seismologists, geologists, etc.) who provided alternative model assumptions and assigned subjective weights for seismic source zones, seismicity parameters, and attenuation models;

- methodology used to solicit subjective input and the procedure to combine input from a group of experts (if there was more than one);

- supporting scientific basis for individual model hypotheses.

As a result of the limitations in these areas, documentation is inadequate to support the probability distribution on the frequency of exceedance per year of ground shaking. In effect, the reader is expected to accept the seismic hazard model and modeling uncertainties that are presented on faith.

In past seismic hazard studies conducted for PRAs,[1,2,10-12] a limited number of experts (possibly only one) were consulted to evaluate the modeling uncertainty in various phases of the analysis. As a result, the process of identifying credible parameter values or model hypotheses may be self-limiting in the sense that the one or two experts participating in the analysis represent a restricted sample of the range of possible expert opinions. This observation is supported by the fact that a comparison between seismic hazard studies using many experts and those using only one or two shows greater variability in the probability distribution on frequency. Figure 3.1 gives an example of the logarithmic standard deviation of the frequency of exceedance at different peak ground acceleration levels as estimated in various site-specific seismic hazard studies, and in the LLNL Sesimic Hazard Characterization Project.[5] In our review of recent seismic PRAs,[16-19] a similar concern was expressed that the uncertainty in key parameters in the hazard analysis was not adequately represented, which ultimately limits the assessment of the probability distribution on the frequency of ground motion.

A second issue that is strongly influenced by the number of experts taking part in the analysis is the central tendency of the hazard curves compared to the results of a multi-expert analysis. For example, it might be anticipated that the results of a hazard analysis that uses a limited number of experts (i.e., one or two), could diverge from a study using many experts. That is, any one expert in a small group can differ from the group and affect the results significantly.

In summary, an ad hoc approach was used in the Oconee seismic hazard analysis to identify alternative modeling assumptions and to quantify subjective probability weights denoting degree of belief. In general, the hazard analysis methodology is consistent with other PRAs that have included external events. At the same time, the study fails to thoroughly document essential aspects of the analysis, and thus results of the uncertainty analysis are in many respects unsupported.

3.2.3 Seismotectonic Regions

In Section 2.1 of Annex J1 of the OPRA, the seismotectonic regions used in the seismic hazard calculations are defined. In all, a single seismotectonic model for the southeastern U.S., composed of seven source areas, was used. As a general comment, consideration of one seismotectonic hypothesis does not parallel past studies wherein multiple hypotheses are considered.

This is due to the differences of opinion between earth scientists as to the causal mechanisms of earthquake occurrences in the East. In fact, variations in seismotectonic regions are generally believed to contribute significantly to the uncertainty in seismic hazard assessments.

The delineation of seismic zones is difficult, since it requires an evaluation of the mechanism of earthquake occurrences in the region surrounding a site. As part of this evaluation, the earth scientist must identify tectonic features or regions that exhibit (or are assumed to have) consistent patterns of seismicity. Since the origin of earthquakes in the eastern U.S. is not known, the seismic hazard analyst, in consultation with geophysical scientists, must interpret uncertain information and quantitatively document the state of knowledge with respect to the causative mechanism of earthquake occurrences. Available information exists partially in the form of physical data (i.e., observed geologic, geophysical properties), observation (i.e., historical seismicity), and scientific hypotheses that attempt to provide a coherent explanation of earthquake occurrences. Because of the limited physical data base and observational record, there is considerable scientific speculation regarding the cause of earthquakes in the East. As a result, the analyst must rely more on the opinions and speculation of experts than on physical data to establish source zones.

The delineation of seismogenic zones is important in the seismic hazard analysis since it establishes the geometric pattern of earthquake occurrences relative to a site. In addition, it also defines the subset of historical earthquakes that serve as the principal basis for estimating seismicity parameters for each seismogenic zone.

In the OPRA hazard analysis report a limited discussion is provided to support the choice of the seismotectonic model adopted which, given the overall importance of the definition of source zones and the subjective nature by which they are generated, is considered to be inadequate. In our view, a complete, comprehensive discussion should be provided to support the seismotectonic model developed and the credibility assigned to it (i.e., the subjective probability weight). The discussion should focus on a number of issues which include (but may not be limited to) the following:

- regional geologic and tectonic structures
- assessments of crustal stress patterns
- geophysical data
- physiographic data
- correlation of historical seismicity patterns with geologic and tectonic structures
- summary of the hypothesized earthquake generation process based on the above points.

With respect to the delineation of seismic source zones, there is no evidence that previous studies on eastern U.S. hazard assessments[20-22] or seismicity data were used directly in the process of delineating source

areas. Given the subjective nature of seismic hazard evaluations in the East and the limited available data, the documentation in the report leads to questions concerning the completeness of the seismotectonic evaluation.

Figure 3.2 shows the seismotectonic model used in the OPRA to evaluate the ground motion hazard. This model was assigned a 1.0 weight, suggesting that there are no other realistic tectonic models that should be incorporated in the analysis or that all other relevant tectonic models are reasonably embodied in the model in Figure 3.2. The former view seems inappropriate, given that other studies available at the time[20-22] offer a number of alternative seismotectonic models. The latter view is a matter of practical concern since the only way to actually evaluate whether the results of other sources are implicitly included is to run the actual cases.

In his review of the seismotectonic source areas, Professor Talwani (see Appendix D) indicates his basic agreement with the seismotectonic model and source areas that have been used. The exception to this is his recommendation that a southern Appalachian region should be modeled as a single source, as suggested by patterns of seismicity. As a result, our concerns are focused less on the scientific merit of the seismotectonic model that was used, but rather on hypotheses that have not been considered.

A comparison of the Oconee seismotectonic model with the 1976 USGS study[21] and the initial Lawrence Livermore National Laboratory seismic hazard study[20] was made. Figure 3.3 shows the USGS source areas used in their 1976 study. Relative to the seismic hazard at the plant, USGS source areas 64 and 65 represent an alternative seismotectonic model to that used in the Oconee study. One consequence of this model is the fact that the Charleston zone (No. 65) is considerably closer to the plant site. As a result, this model would allow Modified Mercalli Intensity X events to occur much closer to the plant. It is anticipated this would result in a higher estimate of the hazard at the plant.

Comparisons with the LLNL study[20] in which experts were asked to assess seismic sources indicate that a variety of alternative model approaches were proposed that differ significantly from the Oconee seismotectonic model. Figures 3.4 and 3.5 are two examples of models that differ from that used in the Oconee study.

The development of seismic sources in the Oconee hazard analysis generally parallels the physiographic provinces identified in the eastern U.S. As discussed in Appendix D, it would appear that source zones that would be derived from analysis of seismicity patterns were not considered. In particular, Bollinger[22] has analyzed the seismicity in the southeastern U.S. Figure 3.6 shows the seismic source areas suggested in Reference 22. The observation from Figure 3.6 is that historical patterns of seismicity suggest different source zone interpretations from those derived from physiographic data.

Further comparison with the most recent LLNL study[5] in which 11 seismotectonic models for the eastern U.S. were developed lends additional support to a conclusion that considerable variation exists in the opinion of experts concerning the nature and extent of earthquake occurrences in the proximity of the Oconee plant. This leads us to conclude that the seismotectonic

evaluation in the Oconee hazard analysis is incomplete, failing to incorporate reasonable alternative seismotectonic models.

We suspect that the Oconee seismic hazard assessment may be unconservative because alternative seismotectonic models were not considered. It is difficult to assess the impact of other seismotectonic models quantitatively without the benefit of actual hazard computations. However, a review of source zones developed by others leads at least in part, to alternative estimates of seismicity parameters, in particular, maximum intensity (or magnitude). Therefore, all other factors being equal (i.e., attenuation models, etc.), consideration of additional seismotectonic models would lead to increased uncertainty in the seismic hazard analysis and a higher mean or best estimate of the frequency of ground shaking. Experience suggests that increasing the maximum event size that can occur at or near a site can have a moderate or greater effect on the results (i.e., a factor of 2 or greater).

3.2.4 Seismicity Parameters

The adequacy of the assessment of seismogenic zones is realized in the quantification of seismicity parameters and ultimately in the predicted spatial distribution of earthquake occurrences near a site. In this review, the latter is difficult to assess without the detailed results of seismic hazard calculations and thus it is addressed here only in a qualitative manner. In this section, the seismicity parameters defined for each seismogenic zone are reviewed. We used the results of the SHCP to make quantitative comparisons with the Oconee results. With this information, the following seismicity parameters were estimated:

- seismic activity rates
- Richter b-values
- maximum intensities.

In determining the seismicity parameters for each seismogenic zone, a number of initial assumptions were made. A lower bound on earthquake intensity of V was assumed. Although no basis was given to support this choice of a lower-bound intensity, it is considered reasonable.

The seismicity parameters used in the Oconee hazard analysis are given in Table 3.1.

Seismogenic Zones

The adequacy of the seismogenic zones defined in the OPRA was reviewed in the preceding section. For each zone, a subset of earthquakes from the historical catalog is used to estimate the seismicity parameters.

Earthquake Catalog

The hazard analysis report does not state which earthquake catalog was used in the analysis. It is simply stated that a historical data base was compiled from several different published catalogs. It would have been useful

to have a plot of the regional seismicity and to identify in the text which earthquake catalogs were used.

Earthquakes that occurred in the period 1870 to 1979 were used, for which it is claimed that the data base is complete for Modified Mercalli intensities (MMI) greater than IV. No basis is given to support this statement.

Seismic Activity Rates

For each seismotectonic zone, seismic activity rates for earthquakes of Modified Mercalli intensity V and greater were estimated which describe the annual frequency of occurrence of earthquakes. In the Oconee hazard analysis, the seismic activity rate was estimated by simply counting the number of events of MMI $\geq$ V in the 110-year period from 1870 to 1979, and calculating the per annum rate.

It is generally recognized that problems of accuracy and completeness exist in most earthquake catalogs. Potential problems are not restricted to historical earthquakes, where they are naturally expected. Recent studies have pointed to inconsistencies in magnitude estimates of smaller events (i.e., m_b less than 5.0). This could influence estimates of activity rates, because of the relatively high rate of occurrence of small magnitude earthquakes.

In order to assess the Oconee hazard analysis in light of the interim results of the SHCP, the activity rate estimates of the two studies were compared as follows. For each zone on an expert's base map reported in Reference 5 that encompasses the Oconee site, the seismic activity rate in terms of the number of events per year per square kilometer was estimated. In this way the effect of zone size does not influence this initial comparison of seismic activity rates in the two hazard analyses. This approach assumes that the zone which encompasses the Oconee site has the greatest contribution to the hazard. The SHCP values are given in Table 3.2. Note that they should be compared to the Piedmont source area in the Oconee study (see Table 3.1). A weighted average of the SHCP estimates (as determined by the experts' self-weights) gives 5.35E-6 events per year per square mile, which is about 12% higher than the estimate for the Piedmont and Upper Coastal Plain source in the Oconee study. This difference is considered small. It should be noted, however, that the experts' estimates of seismic activity rates vary widely.

Richter b-values

The Richter b-value defines the relative distribution of large earthquakes to smaller events that occur in each seismogenic zone. In the Oconee seismic hazard analysis, b-values were estimated by a least squares fit to the data. As pointed out in Appendix D, the estimated b-values fall in the range of values estimated in other studies for this region

In Table 3.2, best-estimate b-values provided in the SHCP are given for the host zone for each seismicity expert. To convert b-values estimated in terms of magnitude, a factor of 0.50 was used to obtain a b-value for intensity. The experts in the SHCP exhibit a wide range of b-values, from 0.44 to 0.64. The weighted average of the experts is 0.52 which compares to 0.56 for

the Piedmont source in the Oconee study. These estimates are considered to be in close agreement.

In the Oconee study, variability in b-values was not formally incorporated in the hazard analysis, where as in the SHCP, the best estimates of the experts vary by 20%. In addition, there is the variability assigned by each expert. Thus, the range of possible b-values may actually vary by 40%.

We would agree that variations of b-values of 20% do not, by themselves, have a major effect on the seismic hazard results. However, since the b-values are correlated with estimated activity rates, they must be considered jointly in order to determine their influence on the frequency of earthquake occurrences. They also depend on the seismic source areas. It is difficult therefore to subjectively assess the overall interaction effect of activity rates and b-values. In general, it is our opinion that it is appropriate to formally consider the variability in b-values, along with the variability in other key parameters such as seismotectonic sources, activity rates, and maximum magnitudes. The effect of not considering the variability in b-values is believed to be small (i.e., less than a factor of 2).

Although b-values were estimated for each seismic source, discussions with the authors of the Oconee hazard analysis indicated that a constant b-value of 0.51 was used for all seismic zones. This value was based on data for the entire southeastern U.S. This approach is not appropriate in our opinion, nor would it appear to be the consensus of the seismicity experts in the SHCP.[5] Although the difference between the assumed b-value of 0.51 and the values obtained for each seismic source is not great (i.e., about 20%), this approach introduces a bias in the analysis. For example, by selecting a constant b-value of 0.51 for the Piedmont and Upper Coastal Plain source area, greater relative likelihood of occurrence of large-intensity events is estimated, since the estimated value of b for this zone was 0.56. The effect on the hazard analysis results of adopting a constant b-value and not incorporating the uncertainty in the estimate is believed to be small (i.e., less than a factor of 2).

Maximum Earthquakes

The estimate of the maximum earthquake size for each seismogenic zone is an important step in the hazard analysis. In the Oconee study, three different hypotheses were used to estimate the maximum intensity earthquake that can occur in each seismic source:

1. Maximum earthquake in each seismotectonic region is equal to the historical maximum in that region.

2. Maximum earthquake is equal to the intensity of the event with a 1000-year return period.

3. Maximum earthquake is equal to the intensity of the event with a 1000-year return period plus one intensity unit.

Each estimate of a maximum epicentral intensity was assigned a subjective probability. For hypotheses 1, 2, and 3, the corresponding weights assigned were 0.50, 0.30, and 0.10, respectively.

Because of the brevity of the historical record and the scarcity of scientific evidence, maximum intensities are difficult to estimate. The approach taken in the Oconee study is yet another attempt to make such estimates. As noted in the hazard report and by Professor Talwani in Appendix D, the use of hypothesis 2, and thus hypothesis 3, is not a very defensible method; however, this method does seem to give reasonable results for the eastern U.S.

In the Oconee study, the Piedmont source area is stated to have a maximum historical intensity of VII and thus, according to hypothesis 1, this is the lowest estimate of the maximum intensity. In his report, Professor Talwani (see Appendix D) notes that the 1913 earthquake in Union County, South Carolina, was assigned an intensity VIII by Taber[23] and VII to VIII by Bollinger,[24] rather than the value of VII stated in the report. This would change the maximum-intensity estimate made according to hypothesis 1 and would undoubtedly change the Richter b-value estimate, and thus the estimates for hypotheses 2 and 3.

In summary, assigning an intensity VIII to the Union County event changes the maximum earthquake in the Piedmont and Upper Coastal Plain as follows:

	Maximum Earthquake
Hypothesis 1	VIII
Hypothesis 2	IX
Hypothesis 3	X

Although the assignment of probability weights to alternative hypotheses is a subjective process, we would disagree with the values assigned to the three methods used to estimate maximum intensities. In particular, it is our opinion that less weight should be assigned to the estimate given to hypothesis 1, and more weight to the other approaches. In past seismic PRAs,[1,2] and in other studies,[5] there is precedent to assign the highest subjective probability to a value equal to approximately one intensity unit higher than the maximum historical event itself. There are of course possible exceptions to this approach (i.e., the New Madrid and the Charleston source areas). The effect of shifting the probability weights is, in itself, probably small.

The distribution of maximum intensity used in the Oconee study can be compared to the estimates given by the experts in the SHCP (see Table 3.2). Recall that the values reported in Table 3.2 for the experts correspond to the host source zone on the expert's base map.

In the Oconee study, the average estimate of the maximum intensity is 7.7 for the Piedmont source area, whereas the weighted average of the SHCP experts is 8.98. This is considered to be a large difference. In addition we note that the SHCP study has a wide range of possible maximum intensity values from VII to XII. (One expert assigned an upper-bound estimate of the maximum magnitude of 8.5.) For the Piedmont source area in the Oconee study, the range of intensities is from VII to IX, whereas the average estimate in the SHCP was nearly IX.

In summary, two major points are raised with respect to the estimate of maximum intensity. First, using the procedure in the Oconee study, the

maximum intensities for the Piedmont source area appear to be underestimated by one intensity. Second, there is a large discrepancy between the estimates of maximum intensities developed in the SHCP and the Oconee study. The average values for the SHCP host zones differ are 1.3 intensity units higher. In addition, the SHCP distribution of maximum intensities includes values much higher than the Oconee analysis. The effect of these differences on the seismic hazard curves is estimated in Section 3.2.8.

3.2.5 Ground Motion Characterization

In this section the approach used to model the attenuation of ground motion is reviewed. Comments are also given on the use of upper-bound accelerations.

3.2.5.1 Ground Motion Attenuation

To describe the variation of earthquake ground shaking as a function of MMI and distance, the following two attenuation models were used.

- McGuire MMI attenuation relation[25] and the Computer Science Corporation[26] ground acceleration-MMI relation,
- Tera Corporation[27] ground acceleration-MMI intensity relation.

These models served as the basis for predicting median peak ground acceleration values. A lognormal distribution about the median attenuation curve is used to account for the randomness in ground motion estimation.

To aid us in our review, we have used the compilation of attenuation relationships in the SHCP[5] as a basis of comparison with the models used in the Oconee study.

As a general comment, the use of intensity-based attenuation relationships raises a number of concerns. As pointed out in the Oconee report, the development of acceleration attenuation relations using MMI is a two-step process. First, site intensities are determined, followed by a conversion to peak ground acceleration. The range of alternative models to make this transformation is wide, and thus there is considerable model uncertainty in predicting strong ground motion.

A second concern centers on the basic use of intensity as a means to predict ground motion. Since intensity is, by definition, a subjective measure of the severity of building response, it is limited in its ability to resolve the issue of ground-shaking intensity, as indicated by the wide variation in PGA for given levels of MMI. As a result, there is an inherent bias in intensity relationships designed to predict peak ground acceleration, related to the fact that the process of damaging structures has filtered the input ground motion to produce a particular observed outcome (i.e., structural damage). Note that engineers have generally agreed that PGA is a poor measure to use in predicting structural damage. The converse is equally true.

In the seismic hazard report documentation or discussion of the basis for selecting the two ground motion models used in the analysis is limited. For

example, was Bollinger's[28] intensity attenuation relationship based on data from the 1886 Charleston, South Carolina, earthquake considered? Similarly, was the MMI-PGA relationship of Trifunac and Brady,[29] or the other attenuation models developed by Tera Corporation considered? These questions reflect a general concern that other reasonable attenuation models were not considered in the study.

In Figure 3.7, the two attenuation models used in the Oconee study are compared to the best-estimate ground motion models (for rock) selected by the experts in the SHCP[5]. To plot the curves, the relationship, MMI = 2 M_b-3.5 was used to convert MMI to magnitude. Figure 3.8 presents a similar comparison with other models provided by the ground motion experts.

As observed in these figures, the Tera model [Eqs. (8) and (9) in the Oconee report] provides higher estimates of PGA than the McGuire-Computer Science Corporation model [Eqs. (6) and (7) in the OPRA] for distances beyond ~15 km. Equations (8) and (9) are in general agreement with the best-estimate models, except for SHCP Model 27. Equations (6) and (7) provide estimates lower by as much as a factor of 1.80 to 2.0 at a distance of 100 km. The difference is less at shorter distances.

Figure 3.8 provides a different comparison. In this figure it can be seen that considerable variability can exist in the assessment of ground motion. In particular, the Oconee study incorporates only a part of this variability. A site-specific analysis, however, may not be expected to have as large a variability as a regional study, such as the SHCP. However, as shown in Figure 3.8 for magnitude 7.0, where the dispersion among the experts is great, the Oconee study accounts for only a fraction of the total variation.

We conclude from Figures 3.7 and 3.8 that the weighted average of the two Oconee models gives lower predictions of PGA, particularly for distances beyond 20 km. In comparison to the SHCP, overall lower hazard levels are estimated in the Oconee analysis. In our judgment, the effect on the mean hazard curve is considered to be small (i.e., less than a factor of 2) for accelerations less than 0.40g.

As pointed out in the hazard analysis report, the two-step process of developing an acceleration-MMI relationship results in greater uncertainty in the prediction of ground motion. This was taken into account by considering different logarithmic standard deviation values. We agree that it is appropriate to consider this added variability. The standard deviation values of 0.26, 0.31, and 0.39 seem reasonable, although no specific basis for the 0.39 estimate is given. Also, no basis is given for the probability weights assigned to the standard deviation values; however, they appear to be reasonable as well.

3.2.5.2 Upper-Bound Accelerations

In the Oconee analysis a limit on predicted ground acceleration levels was imposed by truncating the lognormal distribution about the median ground-shaking estimate at the two standard deviation level. This approach to truncation establishes a limiting acceleration value as a function of the median acceleration estimate, which itself is a function of intensity and distance.

Table 3.3 summarizes the truncation values on sustained acceleration for the two attenuation models, the maximum intensity and the logarithmic standard deviation. The truncation values are defined for distances less than six miles. No basis is given for the choice of a two standard deviation cutoff level, although it is commonly used.[20]

In previous seismic PRAs,[1,2] limits imposed on acceleration have been based on arguments that suggest limits on ground acceleration are dependent on the level of damage associated with the Modified Mercalli Intensity. This type of an approach attempts to use physical arguments to establish truncation values.

The limits on acceleration used in the OPRA for distances less than 6 miles are greater than or equal to the values used in previous studies. For distances greater than 6 miles, the truncation levels will be lower. However, a check of the hazard curves suggests that the truncation point closely tracks the value at distances less than six miles.

The reviewers believe that it is more appropriate not to truncate the hazard curves but to reflect a limit on damageability in the fragility curves; however, the effect of modifying the hazard curves produces the same result. Although we believe that limits on acceleration exist, it is difficult to quantify this belief at this time.

The effect on risk calculations of truncating hazard curves is generally considered to be small, since the accelerations that contribute to risk are usually less than the truncation limits. However, if higher accelerations become important to estimates of plant risk (i.e., in the 0.30 to 0.70g range) the effect could be greater, thus warranting further consideration. In Section 3.2.8, seismic hazard calculations were made to evaluate the effect of different truncation levels on the hazard curves.

3.2.6 Seismic Hazard/Fragility Interface

The process of establishing a compatibility between the hazard and fragility parts of the seismic analysis is an important interface task. To characterize the intensity of ground shaking at the Oconee site, a sustained peak ground acceleration was defined. The use of sustained acceleration is an attempt to characterize the potential of ground motion to damage structures and components.

Beginning with the Zion and Indian Point studies, a number of alternative approaches have been used to characterize the hazard/fragility interface. In our review of past seismic PRAs, a summary of hazard/fragility interface models and review comments is provided.[16-19] The reader is referred to the references cited for background on previous efforts in this area.

In the OPRA, a sustained peak acceleration is defined as being equal to 0.70 times the predicted peak ground acceleration. Although not stated as such, the sustained acceleration is equivalent to, or at least used as, a damage effective acceleration. To complete the ground motion characterization, a broad-band ground response spectrum was used.[30]

As a general comment, the discussion in the hazard analysis report concerning the use of sustained acceleration and the 0.70 factor is limited. In fact, no scientific evidence is presented explicitly or by reference to support the approach used. This is a drawback of the report in that it is unclear whether an adequate basis exists to support the procedure and parameter estimates adopted.

To characterize the hazard/fragility interface, the interaction of a number of attributes of the seismic hazard and the components important to risk must be considered.[14,31] For components these attributes are:

- o response frequency
- o energy absorption capability
- o damping characteristics
- o failure mode.

For seismic hazard the important factors are:

- o earthquake magnitude
- o strong motion duration
- o site-response spectrum characteristics.

Proper consideration of these factors in a seismic risk assessment is therefore site specific, in that the above factors vary from site to site. It is not clear that these factors were considered in the Oconee analysis.

The procedure used in the Oconee study to define an effective ground motion parameter is different from that used in any previous seismic PRAs we are aware of, except for the GESSAR-II study. In effect, however, the 0.70 factor used to scale a peak ground acceleration is similar to that used in the Zion and Indian Point studies, although the two procedures are different. Both procedures (Oconee and Zion and Indian Point), effectively characterize ground shaking in terms of 0.70*PGA and a broad-band ground response spectrum. Our comments in References 3 and 4 related to these studies are therefore appropriate here as well.

The state of the art suggests that the procedure used in the OPRA to model the hazard/fragility interface oversimplifies a complex interaction process.[14] As discussed above, a number of factors related to seismic hazard and fragility must be considered. In fact, the damage potential of an earthquake is extremely dependent on the structures and components affected. In the case of nonductile, acceleration-sensitive equipment, the notion of a sustained acceleration is inappropriate, whereas for ductile structures, the damage effectiveness of ground shaking is very relevant.

In summary, the hazard/fragility interface approach used in the OPRA is an oversimplification of the interaction process (even over the Zion and Indian Point studies). As we concluded in our review of the Zion and Indian Point studies, the ground acceleration level used to scale a broad-band

response spectrum shape is probably conservative for structures or equipment which have ductility; however, for acceleration-sensitive items, it provides an unconservative characterization of the damage potential of ground shaking. We expect, however, that the overall effect of variations in the hazard/fragility interface on the risk calculations would be small.

3.2.7 Comparison with USGS Results

In this section a qualitative comparison is presented between the results of the Oconee seismic hazard analysis and the USGS hazard assessment conducted for the contiguous U.S. (Comparison of SHCP seismicity parameter estimates were made in Section 3.2.4.) At this time, SHCP seismic hazard calculations are not available for the Oconee site. In this section a comparison is made with USGS study results, including the seismic hazard estimates for the Oconee site.

In Figure 3.3 the USGS source areas in the vicinity of the Oconee plant are shown as defined in their 1976 study. The USGS zonation is considerably different from that used in the Oconee study. In fact they parallel closely the source areas suggested by Bollinger[22] (see Figure 3.6). In Table 3.4, the seismicity parameters for source areas 64 and 65 are reproduced from Reference 21. Recall that the 1976 study was completed before the Oconee analysis.

In Figure 3.9, the USGS source areas from their 1982 study are shown. The seismicity parameters for source areas 99, 100, and 101 in this study are also reported in Table 3.4.

A comparison between the USGS source areas and seismicity parameters leads to a number of observations. First, the USGS Charleston zone, in both studies, is in much greater proximity to the plant site than its counterpart in the Oconee study. As a result, maximum intensity X earthquakes used in all three studies (two USGS studies and the Oconee analysis) can occur considerably closer to the plant in the USGS analyses, thus resulting in higher expected ground motions.

Richter b-values estimated in the Oconee study are quite close to 1982 USGS analysis, 0.48 and 0.50, respectively. However, the 1976 USGS study estimate of b was 0.33. This value would tend to estimate higher frequencies of occurrence for larger magnitude earthquakes.

Figure 3.10 compares the USGS 1976 and 1982 hazard curves with the mean Oconee hazard curve. It is difficult to make a true qualitative comparison between these studies since the USGS studies do not account for the variability in ground motion. If they had, their results would be higher.

The USGS hazard curve (1976) is higher by a factor of about 2 than the Oconee mean hazard curve estimated in the Oconee study. However, if the variability in ground motion was incorporated in the USGS calculation, a greater difference would be expected.

3.2.8 Sensitivity Calculations

As part of the review of the seismic hazard analysis, a limited sensitivity study was performed to verify the results reported in the Oconee report

and to evaluate the sensitivity of the hazard assessment to different parameter assumptions. The results of these calculations are reported below.

From information in the Oconee report and discussions with the author of the analysis, data input to a standard seismic hazard analysis routine were prepared.[32] As a first step, calculations were performed in an attempt to verify the results reported in the Oconee study. The following two cases were used as a basis for comparison:

- o Case 1 - Attenuation model - Eqs. (6) & (7) (OPRA)
  Logarithmic Standard Deviation - 0.26
  Maximum Earthquake - Hypothesis 2
  (See Table 1 of the hazard report)

- o Case 2 - Attenuation model - Eqs. (8) & (9) (OPRA)
  Other factors the same as for Case 1

The results of our calculations and those reported in the OPRA are shown in Figure 3.11 in terms of sustained ground acceleration. From the figure it can be seen that beyond 0.40g, there are differences of greater than a factor of 2 between the two estimates for case 1 (i.e., OPRA and this study). For case 2, there is a factor of 2 difference at 0.20g's. Note that the Oconee hazard estimates are higher.

These findings were discussed with the author of the Oconee hazard analysis. In this discussion we first confirmed that the input to our calculations were correct. It is unclear, from the results reported in Figure 3.11 and our discussions with the analysts involved in the Oconee study, exactly what truncation level was used in the Oconee calculations. We understand that possibly a truncation at greater than two standard deviations was used, although this could not be confirmed. Secondly, it was learned that the seismic hazard results reported in Table 3 of the Oconee hazard report are smoothed values. The ill effects of this smoothing, which was greatest near the truncation limit, are apparent in case 1. From the results of our hazard computations, we find that only the Piedmont and Upper Coastal Plain source area contribute to the results for accelerations greater than 0.50g. Therefore, the truncation of the hazard curves is limited by the maximum intensity in this source area (i.e., MMI = VIII). From Table 3.3, the limit on acceleration is 0.681g; therefore, beyond 0.681g the frequency of exceedance should be zero. The Oconee hazard curve at 0.70g has a frequency of exceedance of 2.8E-7, which is incorrect.

To reconcile our calculations with the Oconee results for cases 1 and 2, a three standard deviation truncation level was used. Figure 3.12 shows this comparison. For accelerations <0.70g, the results are reasonably close. Above 0.70g, the results are not as favorable since the truncation level is higher for a three standard deviation cutoff.

Similar comparisons apply for other standard deviation levels and maximum earthquake hypotheses. From these results we conclude that a truncation level higher than two standard deviations may have been used in the Oconee hazard analysis. On balance, the hazard curves reported are conservative by as much as a factor of 2 at low accelerations. Greater differences exist at accelerations above 0.40g.

In Figure 3.13, a much higher truncation level of five standard deviations is considered for cases 1 and 2 and are compared to the Oconee results. Using a higher truncation limit produces hazard curves two to three times higher for case 1 and less for case 2. This suggests that for accelerations less than 0.40g, the effect on the hazard results of applying a truncation on acceleration is small.

As part of our review, it was stated that the maximum intensity for the Piedmont and Upper Coastal Plain source area for all three hypotheses may be underestimated by one intensity unit. Figures 3.14 to 3.16 compare the effect of increasing the maximum intensity for cases 1 and 2, one unit for each hypothesis on the maximum size earthquake. For the Piedmont and Upper Coastal Plain source, the following revised estimates are made:

Hypothesis	Maximum Earthquake	Figure
1	VIII	3.14
2	IX	3.15
3	X	3.16

For comparison, the hazard curves with a three standard deviation truncation are used. From each figure we see that for accelerations less than 0.30g, there is at least a factor of 2 to 3 increase in the hazard estimate corresponding to a one unit increase in the maximum intensity.

For accelerations beyond 0.30g, the difference increases to as much as a factor of 10 (see Figure 3.14). The largest differences are realized for hypothesis 1, while for hypotheses 2 and 3 the largest variations are less than a factor of 5.

From these sensitivity calculations we conclude the following. As provided in the Oconee study, the seismic hazard curves are conservative, for the parameter values stated in the report. At accelerations less than about 0.40g, the Oconee seismic hazard curves were as much a factor of 5 higher. We concluded from our discussions with the author, and our own calculations, that a higher truncation level (i.e., three rather than two standard deviations) may have been used. The effect of using a three standard deviation truncation as opposed to a much higher truncation level is small.

If the maximum intensity estimates for the Piedmont and Upper Coastal Plain source are increased by one intensity unit, the calculated seismic hazard at Oconee is increased. According to our calculations, there is at least a small effect (i.e., a factor of 2 or greater) on the frequency of exceedance. The effect varies for each hypothesis on maximum-size earthquake. Overall, we judge that increasing the maximum intensities estimated for the Piedmont and Upper Coastal Plain source will result in a moderate (i.e., a factor of 3 to 10) increase in the seismic hazard.

3.2.9 Summary

Comments raised in the review of the seismic hazard analysis are summarized. In general, the seismic hazard report provides inadequate documentation for all parts of the analysis. In addition, we judge that important parts of the analysis are incomplete, such as the delineation of seismic sources. The following summarizes our major comments.

- The methodology used to evaluate the frequency of exceedance is adequate and appropriate to characterize the seismic hazard at the Oconee site.

- Throughout the seismic hazard analysis, an ad hoc approach was used to make subjective assessments. Annex J1 is not, in our opinion, a tractable presentation of the information used in the analysis or of the process by which the model uncertainty was quantified.

- Consideration of only one seismotectonic model is believed to be inappropriate and probably unconservative.

- The seismotectonic model used in the analysis is reasonable.

- The maximum intensity for the Piedmont source area is believed to be underestimated by one intensity unit. According to sensitivity calculations, this results in a moderate increase in the seismic hazard (i.e., a factor of 2 to 10).

- An independent attempt to verify the Oconee seismic hazard curves suggests that possibly a three standard deviation truncation was used in the analysis, rather than the two standard deviation level stated in the report.

- Sensitivity calculations indicate that truncation of the hazard curves at a much higher truncation level (i.e., higher than three standard deviations) has a small effect on the results.

- Comparisons with the SHCP show that the attenuation models used in the Oconee study provide lower estimates of the seismic hazard. Overall, we judge this would have a small effect on the hazard estimates (<0.40g).

- The estimates of seismicity parameters, activity rates and b-values, are in reasonable agreement with estimates from other studies.

- In our opinion, the uncertainty in the frequency of exceedance is underestimated, leading to an unconservative estimate of the site hazard. If a complete family of seismotectonic models and attenuation relationships is included in the analysis, we estimate there will be a moderate increase in the frequency of exceedance (i.e., a factor of 3 to 10).

3.3 Seismic Fragility Analysis

3.3.1 Introduction

A preliminary review of the seismic fragility data for structures and equipment used in the OPRA was conducted. The fragility analysis is contained in Annex J2 of Appendix J, entitled: "Conditional Probabilities of Seismic Induced Failures for Structures and Components for Oconee Generating Station Unit 3." The fragility data used in Section 9.1 of the OPRA were also reviewed. In addition to the report sections, a copy of the fragility calculations was obtained and reviewed, and a two-day plant visit was made to inspect the Oconee buildings and equipment.

The adequacy of the fragility calculations is discussed in this section. A sensitivity analysis was conducted to investigate the influence of different fragility assumptions for the significant contributors and is presented in Section 3.4. The plant background information and the fragility methodology used in the OPRA is discussed in the next section, followed by general comments and then specific comments on the significant contributors to the analysis. Conclusions based on the fragility analysis review are given in the last section.

Note that in the review of the fragility analysis all capacities are peak ground acceleration capacities unless otherwise stated.

3.3.2 Plant Background and Fragility Methodology

The Oconee nuclear station was designed in the late 1960s and thus was analyzed for pre-1973 seismic requirements. The plant was designed for a maximum hypothetical earthquake (MHE) of 0.1g (similar to the current safe shutdown earthquake) and a design earthquake of 0.05g (similar to the current operating basis earthquake). The Oconee plant is founded on rock. All structures are located on rock except for parts of the turbine building and the borated water storage tank. Class I structures founded on overburden were designed for a 0.15g MHE. The seismic response spectra used in the structural design were the Housner spectra. Both the effects of the MHE and a loss-of-coolant accident (LOCA) were considered simultaneously in the plant design.

One exception is the safe shutdown facility (SSF) which was constructed post-1973 and is designed for current USNRC criteria. It is founded on rock, and it was designed for an SSE of 0.10g.

The Zion method[13] was adapted to develop the fragility information used in the OPRA. It was assumed in the fragility analysis method that the underlying response and capacity parameters are related in a multiplicative manner, which leads to the assumption of the lognormal model. Variability is separated into randomness and uncertainty components where randomness is inherent in the model and cannot be reduced by any additional analysis or testing and is largely attributable to the randomness in the ground motion "signature." In contrast, uncertainty is the portion of variability which can be reduced by additional work (e.g., analyses and testing). Uncertainty is characterized by a lognormal distribution on the median capacity. Thus both the model for the median capacity and the model for the capacity conditional on knowing the median value are assumed to be lognormal. The parameters of the lognormal

fragility model consist of a median capacity, $\check{A}$ (i.e., the median of the medians) and logarithmic standard deviations β_r and β_u for randomness and uncertainty, respectively.

The method used for characterizing structure fragility in the OPRA has two important features. First, it is based on a double lognormal distribution model as described above. Second, the probabilistic analysis uses the results of the original design analysis as the basis for developing the seismic fragility information. The median fragility values were obtained using the response and capacities from the design analyses which were scaled to eliminate conservatisms. The estimated variabilities, which include randomness and uncertainty, were based on some data, but mostly on engineering judgment.

In the Zion method, the fragility analysis for a structure starts with the design capacity usually corresponding to the MHE design. Then the factors of safety are systematically factored out for the following response and capacity factors in order to develop the median capacity:

- Spectral shape
- Soil-structure interaction
- Frequency
- Mode shape
- Damping
- Modal combination
- Combination of earthquake components
- Strength
- Inelastic energy absorption

Because of the assumed underlying lognormal model, median factors of safety are simply multiplied together and the result is used to scale the design ground motion capacity. Logarithmic standard deviations obtained for each factor are based on a first-order Taylor series expansion of the relationships between response or capacity and the underlying physical variables. It is generally assumed that the factors are independent and the corresponding logarithmic standard deviations can be combined by the square-root-of-the-sum-of-the-squares (SRSS) procedure.

The methodology for characterizing the equipment fragility uses the same lognormal distribution model as assumed for structures. However, in addition to some of the structure response factors which affect the equipment fragility, a corresponding set of equipment response factors are considered. In total, the effects of the following three categories of factors are included in the equipment fragility analysis:

- Equipment capacity
- Equipment response
- Structure response

More complete description of the characteristics of the Zion method can be found in References 13 and 14.

3.3.3 General Comments on the Seismic Fragility Analysis

The OPRA fragility calculations were performed back in 1980 to 1981 immediately after the Zion and Indian Point PRAs. The approach and quality of the calculations for the OPRA are similar to these first PRAs. No evidence was found in either the OPRA or supporting calculations to indicate that an iterative fragility analysis was performed in which the capacities of the more significant components were refined as their importance was discovered during the course of the systems analysis. Apparently, a single fragility analysis was conducted with emphasis distributed equally among all the components.

As discussed in Section 3.3.4, generic fragility values were developed for many of the equipment items. This approach is particularly conservative for Oconee where the capacity factors were based on the assumption that the design earthquake, referred to in the OPRA as the Operating Basic Earthquake (OBE), caused stresses in a critical element close to the code capacity. Since the OBE is only 0.05g, the resulting generic equipment capacities are conservatively low when compared to historical earthquake data for heavy industrial facilities. This observation is discussed for specific components in Section 3.3.4.

One area receiving particular attention in the review was the computed capacities of the block walls which appear to be relatively low (i.e., ~0.3g). The mean frequency of core melt from the OPRA is 6.3E-5 per year. If the block walls are eliminated from the analysis, the mean frequency of core melt drops to 5.4E-5/yr (compared to 7.5E-5/yr obtained in this review). These sensitivity analyses are discussed in more detail in Section 3.4.

Block wall tests are currently being conducted by Duke Power Company on wall configurations similar to block walls at the Oconee plant. As part of the OPRA review, one set of these tests was observed, which confirmed that an arching mode of resistance would occur and greatly increase the strength of the walls above the capacities assumed in the OPRA.

Several important issues raised in past seismic PRA reviews are also pertinent to the OPRA. These include the question of relay chatter, dependency, failure of secondary components, and design and construction errors. Each of these concerns is discussed below.

It is assumed in the OPRA that relay chatter is fully recoverable and thus was not included in the systems analysis. Various median values have been used in past seismic PRAs and range as low as 0.41g as reported in the Seabrook PRA.[12] The recently published Handbook for Nuclear Power Plant Seismic Fragilities gives relay chatter fragility values.[33] The spectral acceleration median capacities for 5% damping in the 5- to 10-Hz frequency

range are 5.67g and 2.59g from expert opinion and test data, respectively. The combined median capacity based on a statistical procedure described in Reference 33 is 1.66g with a logarithmic standard deviation of 1.51. Note that the median spectral acceleration capacities must be reduced by a factor of 2 to 5 to obtain the equivalent peak ground acceleration capacity because of dynamic amplification in both the electrical cabinets and the building structure.

It is generally accepted that relays will chatter at low ground motion acceleration levels. The following statement made in the OPRA in Annex J2 (page J-5-125) supports this conclusion:

> "Consequently, chatter in large relays and contactors can be expected at seismic levels above the MHE."

The important questions become:

1. Which relays could chatter and cause breakers to trip or cause other electrical malfunctions that would affect the safe operation of the plant?

2. Can the plant operators reliably reset the relays in a timely manner after the earthquake?

Currently, relay chatter is being investigated. Some systems engineers believe that as few as 10 to 30 relays are critical, and if they can be determined then they could be replaced with rugged units that will not chatter. In Section 3.4, the implications of including relay chatter in the OPRA are discussed.

The issue concerning dependence affects both systems in parallel and systems in series. The OPRA and most past seismic PRAs conservatiely assume that identical components in parallel are considered to be a single component. For components in series, previous practices have conservatively modeled them as independent. However, in the case of piping, the piping segments are connected in series; thus, the frequency of failures for a piping system may not be conservatively represented by the frequency of the weakest component, unless the capacities and responses of all segments are individually (i.e., capacity with capacity and response with response) perfectly correlated or unless the capacity is dominated by a single weakest component.

Because piping often extends a relatively long distance and is supported at many places in a structure, piping response will not be perfectly correlated. Also, because different components may come from different manufacturers or material runs, capacity also is not perfectly correlated. A similar problem also exists for the electric cables supported by cable trays. Because the capacities for piping are conservatively low (see Section 3.3.4), it is unlikely that the concern for dependence is significant; however, if the capacities are revised upward, the contribution due to dependence should be reconsidered.

Failure of secondary components which could fall and affect safety-related components is an important consideration in a seismic PRA because of the common cause effect of seismic motions. The fragility report gives no

indication that this issue was addressed in a systematic manner, although it obviously was considered to some degree, since block wall failure was included in the analysis and is an example of such a problem. During the plant walk-down, no obvious concerns were observed. However, because capacities in seismic PRAs are generally high, the potential for contribution from non-safety-related components becomes greater. The OPRA seismic capacities are generally conservatively low which tends to compensate for any secondary failures that may have been missed.

Design and construction errors were not considered systemically in the OPRA. A troublesome concern is the quality of information generated during the plant design which is used as a basis for developing the structure and equipment fragilities. The calculations for the original design were not checked, except for the auxiliary building where a new dynamic model was developed and used in the building analysis. Unfortunately, no floor response spectra were computed to benchmark the extrapolations which were required in the equipment fragility analysis for the auxiliary building earthquake response factors, since response spectra for only up to 2% damping were available. In general, the analysis and conditions of the plant were accepted on faith.

The above concerns have been discussed in past PRA reviews[3,4,16-19] and also in the PRA procedures guide, which it is hoped will provide a framework for incorporating these issues in future PRAs.[14]

3.3.4. Review of Significant Components

The significant components in the OPRA were reviewed to determine the reasonableness of the fragility parameter values used in the analysis. The 34 components given in Table 9.6 of the OPRA were selected for detailed review. These components were used in the final seismic sequence logic. In addition, the capacities of other components were considered, and the basis for eliminating them from the final fault trees was evaluated. From this review, seven additional components were added to the detailed review list. Table 3.5 gives the 41 components which were considered in more detail in the review.

The basis of the review included Appendix J, Annex J2, in the OPRA entitled "Conditional Probabilities of Seismic Induced Failures for Structures and Components for Oconee Generating Station Unit 3," calculations performed in support of Annex J2, results from past PRAs, earthquake experience at industrial facilities, and the engineering experience and judgment of the reviewers.

First, comments concerning the review of the fragility calculations are given, which apply generally to many of the components. Comments for the specific components in Table 3.5 are presented next. Additional comments are made concerning safety-related components with relatively high capacities which were excluded from the analysis. These comments are given in Section 3.4 as part of the sensitivity analysis.

General Comments: Half the calculation file, which is approximately 4 inches thick, is devoted to the analysis of major structures (i.e., reactor, auxiliary, and turbine buildings, safe shutdown facility, intake structure, and

borated water storage tank). The remainder of the calculations were for the equipment.

In general, the calculations for the equipment were poorly organized and difficult to follow. Many inconsistencies were found, which were more bothersome than substantive. For some components, the calculations were not found at all, although they may be concealed in some hidden corner of the calculation file. Part of the difficulty is related to the fact that many of the fragility factors (i.e., structure response, equipment response, and equipment capacity) were developed generically for different groups of equipment.

The floor response spectra used in the fragility analysis were extrapolated from lower damping spectra or spectra from other buildings. Thus, the reasonableness of the equipment response shape factors was difficult to determine, partly because the response spectral ordinates were scaled from plots of spectra and, apparently, the scaling process was done multiple times even for the same location. This resulted in slightly different values for equipment at the same location, which made it difficult to systematically find common logical threads throughout the equipment fragility analysis.

As explained above this was further complicated by the lack of response spectra at certain locations or for higher damping values, which required extrapolations of spectra from other buildings and even from other seismic response studies. In summary, it was nearly impossible to verify that the response spectra shape factors for equipment were rationally developed. Because the strength of the buildings at Oconee is high relative to the enclosed equipment, elastic building response spectra are relevant to the equipment response and must be carefully used.

At failure, median damping for equipment is assumed to be 5%. However, for the reactor building only 0.5% damping spectra are available from the plant design files. For the auxiliary building, 0.5%, 1.0%, and 2% are available and, finally, for the turbine building, no floor response spectra were claimed to be available. However, in Reference 34, which was the primary basis for the floor response spectra, response spectra in the turbine building at elevation 796 feet 6 inches and 822 feet are given for 1/2% to 2% damping in two directions.

In the fragility analysis, response spectra were extrapolated between buildings (e.g., auxiliary building to the turbine building), and factors of safety were developed to adjust lower damping spectra to spectra corresponding to median (5%) damping. These factors are very sensitive to the building configuration, height above ground of the floor under consideration, and the frequency of the equipment being analyzed. It is almost certain that if new analyses had been conducted to derive the floor response spectra directly, many of the response spectra shape factors for equipment with fundamental frequencies in the 5- to 10-Hz range would be significantly different.

It was noted above that a new dynamic model was developed for the auxiliary building for the structure fragility analysis. It would have been relatively straightforward to develop realistic median-centered floor response spectra directly, which would have been signficantly more certain than the spectral ordinates based on questionable extrapolations and adjustment factors.

About 40% (i.e., 16 out of 41) of the component fragilities listed in Table 3.5 were based on a generic analysis for the capacity factor. The generic analysis is described on pages J-5-116 through J-5-119 of Annex J2. Four categories of generic equipment were considered which consisted of crossing light and heavy cases with rigid and flexible cases. It was assumed that the equipment supports are the critical element and that combined normal plus OBE loading ranges from 0.2 to 1.1 times the design load. This approach has been used in other seismic PRAs; however, for the OPRA, the referenced OBE maximum ground acceleration is only 0.05g. Thus the resulting factor times the OBE acceleration results in very low capacities.

The anchorage systems at Oconee did not appear to be significantly weaker by comparison with similar anchorage systems for other eastern U.S. nuclear power plants which have twice the seismic input. This is particularly true for active equipment such as pumps, diesel generators, etc., which generally have more severe normal operational loads. It is likely that the anchor bolts and other support hardware were selected for other reasons and checked for seismic requirements. In general, the capacities of components developed from generic assumptions on the design stress level appear to be conservatively low in the OPRA.

One measure of the reasonableness of the fragility parameter values is the high-confidence low-probability of failure (HCLPF) values.[35] The HCLPF value is defined in Reference 35 to be simply the earthquake level at which it is extremely unlikely that a component will fail. From the mathematical perspective of the lognormal model used in PRA calculations, the HCLPF is defined to be approximately equal to a 95% probability of not exceeding about a 5% fraction of occurrence. Table 3.5 lists the HCLPF values for the 41 components that were reviewed. Note that these values have been modified by a factor of 1.23 to be consistent with values reported in Reference 35, where all capacities are referenced to a common peak ground acceleration parameter. This was necessary since in some seismic PRAs an effective peak ground acceleration parameter was used while a peak ground acceleration was used in others. Since the OPRA was based on an "effective" acceleration, the component capacities have been increased. Many of the HCLPF values from the OPRA appear to be unreasonably low from the standpoint of historical earthquake experience at industrial facilities and engineering judgment.

Offsite - Power Insulators(1) and 100-kV Lee Feeder(2): Both these components are located on power equipment outside the plant where the limiting capacity is due to brittle ceramic insulators. A review of insulator failure in six major earthquakes ranging from 0.11g to 0.4g was used to obtain the median capacity of 0.20g. The median capacity is low, so that offsite power is essentially lost at acceleration levels corresponding to core melt. This is truer for other PRAs where the capacities of other components are much higher. In the case of Oconee, other critical components have capacities only slightly larger (e.g., auxiliary building masonry walls with 0.28g median capacity, which is a single after conceding loss of offsite power).

In summary, the median capacity used for the ceramic insulators is reasonable.

Condenser(3): This is a large component which is apparently supported by four 5-ft^2 concrete pedestals anchored to the turbine building basement slab. In

the calculations for the condenser seismic capacity, the following failure modes were considered:

1. Shear failure of the weld between the bottom plate of the condenser and the pedestal anchor plate.

2. Bending failure of the embedded (in the pedestal) shear plates and anchor bolts.

3. Pedestal failure (i.e., failure of the anchors and shear plate at top of pedestal).

The calculated median capacity of the condenser is reported to be 0.21g. The true capacity is probably much larger. Even if there was no connection between the condenser and the pedestals, the seismic inertial forces would still be resisted by sliding friction with a coefficient of friction at least equal to 0.4 to 0.5. Assuming that the pedestals do not fail as a unit because of shear or moment effects, the median capacity of the condenser could approach 0.5g.

Details for the pedestal were not available and hence were not checked. In reality the failure modes listed above that were checked contribute to increasing the coefficient of sliding friction and hence the overall capacity of the condenser. Even if the elements considered in the analysis fail, sliding friction will resist movement of the condenser. In order to obtain a more accurate estimate of the condenser capacity, the capacity of the pedestals must be determined; however, it is likely that the median capacity is significantly larger than 0.21g. In addition, the HCLPF value of 0.16g is not reasonable for heavy rigid-equipment-based earthquake experience.

Note that the fragility data for the condenser are not given in Table 5.5 of Annex J2. The date on the condenser calculations occurred after the date of Annex J1. Evidently the condenser analysis was performed after Annex J2 was published.

<u>600/208-V Transformer(4)</u>: This transformer is a rigid passive component located in the auxiliary building at elevation 796 feet. Generic capacity factors were used for this component in the OPRA. The median equipment response factor is 0.81, and except for the letdown cooler and the auxiliary power and station transformers is the only other component with this factor being less than 1.0. Generally, this factor is greater than 1.0, primarily because of conservatism in damping and use of the El Centro earthquake time history which is the basis for the design floor response spectra development. The ground response spectra for the El Centro time history is higher (i.e., more conservative) than the design ground response spectrum.

The structure response factor for this transformer is 0.89 and is consistent with other components. In general, the structure response factor includes the unconservatism between the median ground response spectra assumed for the site and the design response spectrum. This factor is generally less than 1.0. In contrast, the equipment response factor is generally greater than 1.0 as discussed above.

Because this component is considered to be rigid, it may have been erroneously assumed that the effect of the difference between the El Centro earthquake and the design spectra should not be included in the equipment response factor. The following is stated on page J-5-138 of Annex J2 for the pressurizer analysis (another rigid passive component):

> "The spectral shape factor, previously stated to be based upon using the El Centro time history instead of an artificial time history generated from the site specific spectra, is also eliminated (i.e., equal to 1.0) since both earthquake descriptions were anchored to the same peak ground acceleration and the pressurizer support structure is considered to be rigid."

Since a rigid component in a building is sensitive to the peak floor acceleration, the difference in the ground response spectra (i.e, El Centro vs design) at the frequency of the building (not the frequency of the equipment) should be used to determine the equipment spectral shape factor. For the pressurizer, the fundamental frequency of the reactor building is 3.5 Hz and the factor is roughly 1.2.

For the 600/208-V transformer, the auxiliary building fundamental frequency is 9.4 Hz and the spectral shape factor is close to 1.0. However, the median response spectrum and the design response spectrum are also close; thus the structure response factor also should be close to unity (it is 0.89 in Table 5.5 of Annex J2). In total, the product of the three factors (i.e., structure response, equipment response, and equipment capacity) and the OBE acceleration of 0.05g is 0.27g, which appears to be low.

More important is the capacity of the actual component rather than a generic equivalent. During the plant tour the 600/208-V transformer was inspected. It is approximately 18 by 24 in. in plan and 3 ft high, and is anchored to the floor slab by four bolts, which are at least 5/8 in. in diameter. It is likely that the median capacity for this component is over 1g and probably much higher.

Auxiliary Building Block Walls(5): The block walls represented by component 5 are located throughout the auxiliary building. The calculations for the capacity of the block walls were reviewed in detail. It was assumed in the analysis that the walls are hollow and constructed with type-N mortar with a median tensile capacity of 20 psi. This is a design value, and judging from tests conducted for Duke Power Company this value is on the low side.

The failure history assumed in the fragility analysis was postulated to consist of the following three stages:

1. Cracking at the bottom (the bottom of the wall and two sides were assumed to be fixed and the top pinned).

2. Cracking at the middle of the wall (the bottom and top were assumed to be pinned).

3. Rigid body rocking at the top and bottom wall sections (i.e., above and below the crack in the middle of the wall) leading to the final failure.

It was found in the analysis that the highest capacity corresponded to the first stage (i.e., cracking at the bottom) and the other two stages would follow directly.

The possibility of a higher capacity corresponding to arching action was not considered. During inspection of the plant by the reviewers, the condition of the block walls was examined. The walls appeared to be tightly constrained by the side supports and top. No noticeable cracks or spaces were observed at the top of the walls (the walls were spot checked, but not systematically inspected). It appears that arching action is a realistic mode of resistance. An approximate arching-action analysis suggests that the actual block wall capacities may be many times larger than assumed in the OPRA.

Recent block tests being calculated for Duke Power Company also indicate that the capacities are larger and that arching action does occur. Dr. John Reed observed the last series of tests of a block wall panel which was constructed with an opening. The panel was subjected to multiple motions over three and one-half times higher than the design input. There was only minor cracking and the wall definitely developed an arching mode of resistance. The median capacity of 0.28g used in the OPRA is lower than the input level used in the block wall tests.

In conclusion, the block wall capacity used in the OPRA is conservatively low and the walls which are constrained between the floor and the concrete above have median capacities which are generally greater than 1g (also see comments for component 9 below).

The variability assumed for the block wall capacities used in the OPRA is also low. By not considering the possibility of arching action, both the median capacity and uncertainty logarithmic standard deviation are on the low side. In addition the calculated variabilities for the strength factor are incorrect. It was assumed that the standard deviation, σ, for a lognormal distribution is related to the logarithmic standard deviation, β, as follows:

$$\sigma = \check{m}\,(1 - e^{-\beta}) \,, \qquad (1)$$

where $\check{m}$ is the median capacity. However, the correct relationship is as follows:

$$\sigma = \check{m}\, e^{\beta^2/2} \sqrt{e^{\beta^2} - 1} \,. \qquad (2)$$

The values calculated by Eq. (1) are low by as much as a factor of 2 for typical β values. For example, the final β_u value for the strength factor using Eq. (1) for block walls at elevation 838 ft is 0.23 compared to the more correct value of 0.41 using Eq. (2).

<u>Transformer CT3(6), Transformer CT5(7), and Transformer CT4(8)</u>: These three transformers are large components located at the ground level. Transformer CT4 is enclosed in the blockhouse. The capacities of CT3 and CT5 were based on generic capacity values for rigid components corresponding to support failure. Transformer CT5 was observed during the site inspection and was found to have ceramic insulators on top. In addition, the oil coolers probably are not rigid. However, the resulting median capacity of 0.30g is reasonable.

The capacity of transformer CT4 was determined on the basis of a specific analysis of its supports. This transformer may also have ceramic insulators and definitely has flexible oil coolers. The median capacity of 0.31g also appears to be reasonable.

Transformer CT4 Blockhouse(9): The controlling element is the block wall which separates the CT4 transformer from the switchgear. It is constructed of 12-in.-wide unreinforced block and is 28 ft high. Two intermediate steel wide flange sections spanning vertically at the one third points strengthen the wall. As in the analyses performed for the auxiliary building block walls (see discussion for component 5 above), it was assumed in the fragility analysis that failure is governed by either cracking or rigid body rocking. Again, the potential capacity of arching action was not considered.

We learned in a discussion with Duke personnel that the wall is constructed up to and tightly against the roof of the blockhouse. However, conventional flexural capacity has been used to verify that this wall can resist the MHE in response to USNRC IE Bulletin 80-11. Because of its high flexural capacity, arching action was not used as a licensing defense.

An approximate arching analysis indicates that the median capacity of the wall is greater than 0.5g. Hence the 0.31g median capacity used in the OPRA appears to be low.

HPSW Elevated Storage Tank(10): This is a 100,000-gal elevated storage tank located on a small rise just west of the plant. No analysis for this tank was found in the calculation file. Table 5.5 in Annex J2 indicates that the median capacity of 0.35g was based on an engineering estimate, without a specific calculation.

Drawings for the tank are available from Duke Power Company, and a specific fragility analysis should have been performed for this component. Although the capacity is consistent with past earthquake experience (i.e., tanks often have low seismic capacity), the capacity of this tank may be higher.

4160/600-V Transformer(11): The 4160/600-V transformer is located in the turbine building at elevation 796 feet which is the mezzanine level. This is a rigid passive component and the fragility parameters were estimated on the basis of engineering judgment. An analysis probably was not performed since floor response spectra were apparently unavailable for the turbine building (see general comments section).

The median capacity of 0.40g for component 11 is contrasted to the median capacity >2.00g for the 4160/600-V transformer located in the safe shutdown facility (SSF). The latter capacity is based on generic test data. Although Table 5.5 in Annex J2 indicates that the failure mode for component 11 is relay chatter (transformers per se do not have relays), it is believed that the capacity is really a structural failure mode.

The transformer in the SSF was inspected during the plant visit. It is anchored by welding to plates embedded in the floor slab at four locations. Although the anchorage in the turbine may not be as rugged as the support in the SSF, it is likely that the median capacity of component 11 is larger than

0.40g. The HCLPF value given in Table 3.5 is only 0.18g, which is unreasonably low.

Feedwater Heaters(12): The supports for the feedwater heaters are located at elevation 775 feet (basement) in the turbine building. These components are tall, slender, vertical tanks which are each supported on four steel pipe columns anchored to the floor slab. As with other components in the turbine building, the capacity was estimated on the basis of judgment. No horizontal support was observed during the plant inspection at the top of the tanks. Each tank is confined to deflect approximately 6 inches on each side by the floor slabs through which it passes. Without further analysis, the median capacity of 0.40g assumed in the OPRA appears to be reasonable although on the low side compared with vertical heat exchangers from past seismic PRA studies.

Jocassee Dam(13) and Keowee Dam (east intake)(15):

A qualitative review of the Jocassee and Keowee dams has been performed from the engineering point of view by the Structural Analysis Division of BNL. Certain difficulties in evaluating the strength and reliability of these flood-control structures have been observed and identified in Appendix E. In the reviewers' opinion, the median capacity of these structures is underestimated; however, because of the limitations of this review no reevaluation was performed in the results presented. In Section 3.4, the same fragilities as those generated by the OPRA were used.

High Voltage Bus Ducting(14): The specific high voltage bus ducting as presented by component 14 is not known, since no information was found in the calculation file. From Table 5.5 in Annex J2, it is indicated that the bus ducting is located at the ground level. The equipment response and capacity factors are different from any other component listed in Table 5.5, which suggests that a specific analysis was conducted for this component.

The median capacity of 0.56g is low enough that it is unlikely that the ducting per se has a lower capacity; however, its capacity may be controlled by relative displacements of the equipment to which it is attached. It is likely that the capacity used in the OPRA for this component is conservative.

Upper Surge Tank(16): This tank is located at elevation 838 feet in the turbine building on a platform above and to the side of the turbine deck. Table 5.5 of Annex J2 indicates that this component is rigid, and thus generic capacity factors for rigid equipment were used. In fact, each of the two horizontal surge tanks is supported by four steel columns and the vertical tank in the middle is located high off the floor also on four braced columns. All three tanks and supporting structure are flexible, hence the higher flexible equipment capacity factors should have been used. Although it is not clear that these tanks were designed for seismic forces, past experience in industrial facilities indicates that tanks of this type when anchored can resist earthquakes up to at least 0.5g. Thus the median capacity of 0.62g is consistent but probably on the conservative side.

Pressurizer Supports(17): The pressurizer is a rigid component located at elevation 813 feet in the containment. There is considerable confusion in the fragility report and in the calculation file for the pressurizer. The median

capacity factor given in Table 5.5 of Annex J2 is 5.30; however, the calculations give a value of 2.36 corresponding to the capacity of the anchor bolts. This calculation is dominated by the assumption that the design loads correspond to 80% of the yield capacity. This is likely to be conservative; hence, the 5.30 value for the capacity factor appears to be more realistic.

The calculations for the equipment response factor are even more confusing. On page J-5-139 of the fragility report the product of the qualification method, modeling error, and earthquake component combination factor is 1.55, but the corresponding value in Table 5.5 is 1.24. Actually, there are computations leading to both factors at two different places in the calculation file: at one place the floor zero peak acceleration (ZPA) is 0.12g while at the other it is 0.15g. This accounts for the difference between 1.55 and 1.24. At one other place in the calculation file the ZPA value is 0.135g. It is guessed that the values were scaled off a response spectrum plot at three different times.

As discussed above for the 600/208-V transformer (component 4), the spectral shape factor for the difference between the El Centro spectrum and the design spectrum for both component 4 and the pressurizer has been erroneously eliminated. This factor is approximately 1.2 for the pressurizer. In conclusion, it is likely that the median capacity of the pressurizer is higher. If the more rational factors are used, a median capacity of 0.9g is found which is higher than the value of 0.62g used in the OPRA.

One glaring error between Table 5.5 in Annex J-2 and Table 9.2 in Chapter 9 of the OPRA is the β_r value used for component 17. In Table 5.5, the value is given as 0.20, but in Table 9.2 it is shown as 0.70. It is likely that the incorrect value was used in the core melt frequency analysis since the example on page 9-40 of the OPRA uses component 17 and the incorrect value of 0.70 for β_r. However, it is unlikely that the higher value has a significant influence on the mean frequency of core melt.

Letdown Coolers(18): The letdown coolers are located in the containment at elevation 771 feet. The capacity factor for component 18 is based on generic values which are conservative as discussed above. The equipment and structure response factors in Table 5.5 of Annex J2 seem consistent. Compared with capacities from past seismic PRAs, the median capacity of 0.65g is low. A component-specific analysis likely would increase the capacity of this component significantly.

Reactor Coolant Pump Supports(19): It was assumed in the development of the capacity factor that the reactor coolant pump supports are stressed to 80% of yield for the design earthquake. This single conservative assumption controls the analysis leading to the low median capacity of 0.72g. The equipment response factor calculations do not agree with the resulting median factor of 2.62 and appear to be on the high side relative to other Oconee component factors. If the following fragility report and calculation file factors are used, the resulting equipment median equipment response factor is only 2.14.

Spectral Shape	1.44
Qualification Method	1.0
Damping	1.6
Frequency	1.0

Mode Shape	1.0
Mode Combinations	1.0
Earthquake Component Combination	0.93

Compared to past seismic PRAs, the median capacity of the reactor coolant pump is at least 1.5g and generally much larger. On this basis it is likely that the median capacity for the Oconee reactor coolant pump is much larger than 0.72g.

Main Feeder Buses(20) and Standby Buses(21): Both these buses are located at the ground level and, again, the generic support capacity values for heavy flexible equipment were used in the development of the capacity factor. The resulting median capacity of 0.72g is on the low side. Capacities from past seismic PRAs for structural failure of switchgear and motor control center cabinets give median values generally greater than 1.5g.

SSF 600/120-V Transformer(22), SSF 600/208/120-V Transformer(23), and SSF 600/208-V Transformer(24): All three of these components are located at elevation 817 feet in the SSF. Inspection of these components during the plant tour verified that they are securely anchored to the floor slabs. Again the generic support capacity value for heavy flexible equipment was used, although this equipment is in reality relatively light. As discussed for component 4, the median capacities of these smaller transformers are, at the least, greater than 1g.

Auxiliary Building Shear Walls(25) and Auxiliary Building Moment Frames(28): The capacities for these components were not reviewed in detail. Past PRA studies suggest that it is likely that the median capacities are larger than the reported values of 0.74g and 0.94g, respectively.

However, without further review and analysis, these values are accepted as calculated.

Letdown Line Piping(26): As in other seismic PRAs, a generic fragility analysis was conducted for piping and supports. Because the MHE is only 0.10g, the resulting median capacity is only 0.85g, which is considerably below the corresponding median capacities from past PRAs with values generally above 2.0g. The HCLPF capacity for this piping is only 0.28g. Experience in industrial facilities for earthquakes up to about 0.5g indicates that, if the equipment to which the pipe is attached is properly anchored or if other special problems do not exist, piping does not fail. It is believed that the median capacity of the piping at Oconee is much larger than 0.85g.

Reactor Vessel Internals(27): A specific analysis was conducted for the reactor vessel internals. Information concerning the capacity of the internals is difficult to obtain and generally considered to be proprietary by the NSSS suppliers. At face value the analysis seems reasonable except in the equipment response factor calculation where the ground response spectra shape factor (i.e., due to the differences between the median and design spectra) appears to have been included twice--once in the equipment response factor and then again in the structure response factor. The spectral shape factor of 0.87 in one of the factors should be removed, which will increase the median capacity to 1g.

SSF Diesel Oil Storage Tank(29): The median capacity of the diesel oil storage tank for the SSF is listed in Table 5.5 of Annex J2 as 0.55g, while a value of 1.00g is used elsewhere in the OPRA. In the calculation file, a one-page summary of diesel oil storage tank capacities from past PRAs (one published and three unpublished) is given. From the data, a 1.0g median capacity was selected as indicated on the calculation page.

Since the tank is buried, it is unlikely that any realistic earthquake-induced soil pressures could cause seismic failure. Failure would occur only if relative movement severed the attached piping. For Oconee, the 1.0g median capacity is probably on the low side.

Reactor-Vessel Skirt(30): The capacity of the reactor pressure vessel is based on the capacity of the skirt anchor bolts; however, the strength factor given in Table 5.5 of Annex J2 is 6.73, whereas the calculated value in the computation file is only 2.36. The latter value was developed on the assumption that the MHE loading equals 80% of the allowable value, which probably is conservative.

In comparison with results from past seismic PRAs, the median capacity of 1.18g is low. For example, Zion and Indian Point had corresponding values of 4.6g and 3.8g, respectively. Midland, which also is a B&W plant, had a value of 3.3g based on studies in the LLNL load combination program. It is likely that the actual median capacity is higher then the 1.18g value used in the OPRA.

Large Reactor Coolant Pipe(31): The reported median capacity of the large reactor coolant pipe in the OPRA is 1.23g and is based on a specific analysis of one of the reactor coolant pipe lines. The analysis for the capacity factor is straightforward, except for one discrepancy where the normal operating pressure appears to have been included twice in the calculation of the median factor. The more correct median capacity value is approximately 10% higher.

In comparison with other seismic PRAs, the reactor coolant pipe median capacity is a factor of 2 lower than typical values. It is difficult to argue with the calculations if, in fact, the calculated OBE stresses are as high as stated. However, no indication is given that the design stresses were checked to verify that they are reasonable. It seems surprising that a 0.05g earthquake can cause 8000 psi in the reactor coolant pipe. Past PRAs and the general belief among some engineers in the nuclear industry that piping capacities are much higher than calculated indicate that the reactor coolant pipe capacity is low.

SSF Diesel Generator(32), SSF DC Batteries and Racks(33), and SSF Diesel Day Tank(34): The capacities of all three components were developed using the generic capacity factors given on page J-5-118 of Annex J2 for flexible equipment (i.e., F_C = 11.9); however, the diesel generator and the day tank are listed as rigid components in Table 5.5 of Annex J2. The capacity factors for rigid equipment are lower than for flexible equipment (i.e., F_C between 7.2 and 7.5); although, as discussed above, the generic factors are conservative. A visual inspection revealed that the batteries and racks are flexible and the diesel generator and day tank are rigid.

The median capacity of the diesel generator is reported to be 1.42g which is reasonably consistent with past PRAs. In past experience with earthquakes, diesel generators have not been a problem. This is intuitively reasonable, since start-up and operating forces on the anchor bolts is a severe loading which diesel generators and motors frequently see. However, in the Millstone PRA,[11] which was performed more recently than the OPRA, the median capacity of the lube oil cooler anchor bolts was calculated to be 0.91g. It is generally believed that the diesel generator peripherals are more vulnerable to seismic motions than the diesel generator itself. There is no indication in the PRA calculation that any attempt was made to investigate the capacities of other components associated with the diesel generator.

The median capacity of the SSF batteries and racks is 1.59g, which is consistent with past PRAs. A visual inspection suggested that the racks have above average capacity, i.e., not low as found in some older plants, which had racks with wooden battens, but not as strong as some of the newer plants such as Limerick. The racks are welded to floor plates, but the lateral bracing consists of thin bars. Styrofoam-like material is used to separate the batteries which, over the length of a row of batteries, may crush and deform at high seismic motions; however, it is doubtful that this would cause a failure. In conclusion, the capacity estimate appears to be reasonable.

The diesel day tank looked extremely rugged and is anchored to the floor with four 3/4-inch or larger anchor bolts. The capacity given in the OPRA appears to be reasonable.

<u>600-V Distribution Center(35)</u>: This component is located in the auxiliary building at elevation 796 feet. The relay chatter median capacity is reported in the OPRA to be 1.20g on the basis of generic tests. The calculations are confusing, and it is difficult to determine how the capacity was obtained. It appears that the Corps of Engineers' shock test data were used which gives a median spectral acceleration capacity of 2.6g and a logarithmic standard deviation of 1.59. As discussed in Section 3.3.3, there is considerable uncertainty concerning the appropriate relay chatter capacity to be used.

<u>4160-V Auxiliary Transformer(36)</u>: This component is located in the turbine building at elevation 796 feet. The failure mode of concern is chatter of relays in the associated control cabinet. The median capacity is given in Table 5.5 of Annex J2 to be 0.46g. This is similar to the low value of 0.41g reported for switchgear in the Seabrook PRA.[12] Note that the capacity factor is 7.50 with a logarithmic standard deviation of 0.40. The latter value seems very low. These values are identical to the capacity factor values given for generic heavy rigid equipment and thus may be mistakes.

<u>SSF Electrical(37)</u>: A generic relay chatter capacity for the SSF is represented by component 37. In Table 5.5, all relay chatter median capacities for the SSF electrical components are indicated as being greater than 2.0g. No basis for this conclusion could be found in the report or in the calculations. The same comments given above also apply to these relays.

<u>Letdown Storage Tank(38)</u>: The letdown storage tank is located in the auxiliary building at elevation 771. In Table 5.5 of Annex J2, the median capacity is 0.47g which is based on a generic heavy flexible equiment capacity factor.

The tank was not inspected during the plant tour; hence, no specific comment can be made. This component was included because a low capacity was given and its influence on the final results was investigated.

Borated Water Storage Tank(39): This component was included to investigate its impact on the final results. The median capacity is 0.83g. The calculations were not reviewed, but the analysis approach is reasonable and consistent with similar analyses for past seismic PRAs. Although flat bottom tanks have had low capacities in past PRAs (e.g., the condensate storage tank in the Limerick PRA[10] had a median capacity of 0.24g), the capacity for the Oconee BWST is reasonable and consistent with the large number of anchor bolts used in the tank anchorage system.

Core Flooding Tank(40) and LPI Cooler(41): These two components were added to the list to investigate the assumption that the capacities of these components are sufficiently high to justify eliminating them from the analysis (see Table 9.5 of OPRA). The core flooding tank is located in the containment at elevation 787 feet and the LPI cooler is located in the auxiliary building at the ground level. The capacity factors for both these components was based on the generic capacity factor for heavy flexible equipment. The median capacities are 1.33g and 0.71g for the core flooding tank and LPI coolers, respectively. One LPI cooler in the decay heat removal room was inspected during the plant visit. It is a rugged horizontal tank supported by saddle supports anchored to the floor by eight 1-in. or larger diameter bolts. Its capacity is larger than 0.71g. It is likely that the capacity of the core flooding tank is also larger than used in the OPRA.

3.3.5 Conclusions

From the review of the fragility analysis and the resulting parameter values it is believed that the capacities used in the OPRA are conservatively low. Note that in a PRA the objective of the analysis should be to be unbiased. Thus, neither conservatism nor optimism is desirable. Generic median values were used for many of the components which resulted in conservative capacities. It was difficult to follow the capacity calculations which contain many inconsistencies and, in general, were not well organized. In addition, the high-confidence low-probability values which correspond to the fragility parameter values are in many cases inconsistent with earthquake experience.

The median capacity for the block walls was particularly low. The analysis did not take advantage of the additional capacity provided by arching action, which currently is being verified by testing. This is an important consideration since the block walls are important contributors to the mean frequency of core melt.

3.4 Systems Analysis

3.4.1 Introduction

The objective of this section is to provide a discussion of the seismic accident sequence definitions and quantification. Section 3.4.2 presents a qualitative review of the accident sequence delineation, i.e., a review of the seismic event tree with its supporting logic and of the systems fault trees.

Section 3.4.3 discusses the quantification of the seismic accident sequences and presents the review results, including sensitivity analysis.

3.4.2 Seismic Sequences Definition--A Qualitative Review

In the OPRA, the seismic event sequences were delineated by constructing one event tree that combined aspects of the event trees that were developed for the internal events analysis, i.e., for transient initiating events and for small- and large-break loss-of-coolant accidents; this seismic event tree developed in the OPRA is reproduced here as Figure 3.17 and its top events are given in Table 3.6. Again, as with the event trees for internal events, supporting logic for each of the top events in the seismic event tree was developed in the form of a fault tree combining system-level fault tree top events to define the functional failures of interest.

Before the construction of these logic models (supporting logic and system fault trees), the list of components provided by Structural Mechanics Analysis (Appendix J--Annex J2 of OPRA) was substantially reduced by eliminating irrelevant failures and by discarding those events whose median capacities were sufficiently high for their occurrence to be probabilistically unimportant. Note that this step has also been performed in all seismic PRAs. Following this step, i.e., after constructing the logic models, the OPRA made a reduction in these logic models in two steps:

1. By eliminating seismic failure events with much higher median capacities than other events with the same effects.

2. By combining groups of failures into modules in the same way as the modularization done in the systems fault trees for the internal events.

Having the seismic event tree, the supporting logic, and the systems fault trees, the seismic sequences were obtained by linking the fault trees and obtaining the minimal cut sets using the SETS[36] computer code.

This review examined all the steps used in the OPRA for the delineation of the seismic event sequences. Comments and modifications to each of the steps follows:

- Seismic Event Tree: This review is in agreement with the delineation of the seismic event tree presented in tne OPRA (Figure 3.17).

- Supporting Logic and System Fault Trees: As explained in step 1 above, the OPRA eliminated several seismic failure events (see Table 9.5 of the OPRA) for the construction of the supporting logic and systems fault trees. In this review, several of these events were kept in the fault trees (components 38 through 41 in Table 3.5).

In addition, the following events were also added to the supporting logic and systems fault trees used in this review:

a. System random failures - included as a single developed event for all systems.

b. Operator errors - several operator errors were added to the system fault trees to obtain a more realistic modeling of the systems given specific failures.

c. Relay chatter - added to the fault trees, where applicable. The failure of systems due to relay chatter was used in this review only in the sensitivity analysis.

The modified fault trees used in this review are presented in Appendix F.

The seismic sequences, i.e., minimal cut sets for every sequence in the event tree in Figure 3.17, were obtained by fault tree linking with the SETS[36] code. Note that because the failure probabilities of many components conditional on the occurrence of an earthquake are relatively high, the success states as well as the failures were accounted for in the seismic sequences.

The next section presents the results of the seismic sequences quantification. Note that the inclusion of all the modifications described above had a very small effect on the total core damage due to seismic events.

3.4.3 Review Results and Sensitivity Analysis

The quantification of the seismic accident sequences was performed by using the logic models described in Section 3.4.2. Several analyses were conducted to verify the results given in the OPRA and to investigate the effects of altering the component capacities, operator error, and random failure rates. In each sensitivity analysis a mean frequency of occurrence was calculated both for the individual eight sequences and for total core melt (i.e., the sum of the eight sequences). An independent check was performed using the systems equation for core melt which was derived directly. The results using this equation were compared with the case where the results of the eight sequences were added. Note that the mean frequency is more easily calculated than the entire probability of frequency distribution and provides a reasonable measure to investigate the effects of different assumptions.

These analyses were performed with a computer program developed by JBA which calculates system fragility curves using the system's equations and the lognormal distributions for the components, random failures, and operator errors. The program then integrates the system fragility curves with the site hazard curves. In the sensitivity analyses for Oconee, the logarithmic standard deviations for randomness and uncertainity were combined for each component into a common value. It can be shown theoretically that using a combined logarithmic standard deviation produces the mean fragility curve for a component and subsequently the mean frequency of failure when the mean system's fragility curve is integrated with the mean site hazard curve. Because of the complexity of the system's Boolean equations for the eight sequences, it was difficult to convert them to probability equations which could be used directly. Hence, a strategy was adopted whereby the system fragility curves were calculated using Monte Carlo simulation. One thousand simulations were made for each acceleration level to obtain tne mean frequency of failure as a function of the acceleration level (i.e., fragility curve). For low frequencies of failure (i.e., 0.01 and below) where the Monte Carlo procedure is inaccurate, the Boolean equations were used directly as probability equations. This produces slightly conservative results since the redundant intersections

are not subtracted out. For cases which are significant, the low conditional frequencies of failure do not contribute to the calculated mean frequency of failure. Thus, the adjustment made in the tails of the fragility curves is not a major problem in calculating total core melt, but may affect the results for sequences which have very low frequencies of failure.

In the first analysis, an attempt was made to replicate the example calculation given on page 9-40 of the OPRA. The purpose of the calculation was to demonstrate the procedure used in the OPRA to discretize the hazard and fragility curves and to perform the integration leading to the probability distribution of frequency of core melt. The example considered a simple case of the failure of the masonry walls and the pressurizer supports. All of the 18 hazard curves were used, but only three fragility curves were used for each of the two components (i.e., a median curve and the curves one standard deviation higher and lower, which were weighted 0.6, 0.2, 0.2, respectively). The mean frequency of core melt reported in the OPRA on page 9-42 is 4.4E-6/yr.

The mean frequency was recalculated to be 5.1E-6/yr which is only 16% higher. Two additional calculations were made which used the three fragility curves for each of the two components, weighted in the same manner as in the OPRA. The first additional calculation used the same discretization for the hazard and fragility curves adopted in the OPRA, while the second used an acceleration spacing of 0.02g. The mean frequency of core melt values per year were calculated to be 5.4E-6 and 5.1E-6, respectively. On the basis of the close comparison, the discretization and analysis procedure appears to produce reasonable results.

Also, an unsuccessful attempt was made to verify the individual frequency values given in Table 9.12 of OPRA. It appears that the values used for the hazard curves were different from those in Table 9.9 of OPRA. The analysis procedure in the OPRA used the hazard curves directly rather than the derivative of the hazard curves, which is more correct. As long as a hazard curve is relatively steep (i.e., by comparison with the change in the fragility curve) and the spacing between integration points (i.e., acceleration values) is not too large, then use of the hazard curve directly will produce essentially the same results. However, it was not confirmed which hazard values were actually used in the example analysis, although, as stated above, the final results (at least the mean value) seem reasonable.

In the next analysis an attempt was made to replicate the mean frequency of failure for the six core melt bins defined in the OPRA (see Figure 3.17). Table 3.7 gives the results of the analysis and compares them with the results reported in the OPRA. In this analysis the fragility parameter values were assumed to be the same as those used in the OPRA. For structural components which were eliminated in the OPRA (see components 35 through 41 in Table 3.5) and the random failure and operator action which were not included in the analysis (only RCSRVLC and OP3 were included in the OPRA), appropriate extreme values were assumed to suppress their effect.

As seen in Table 3.7, the calculated total core melt is only 19% higher than given in the OPRA (i.e., compare 0.75E-4 to 0.63E-4 per year). All sequence bins except bins V and VI compare closely to the OPRA results. For bin V, the calculated value of 0.13E-4/yr is higher by a factor of 4 than the value of 0.32E-5 reported in the OPRA. Finally, for bin VI, the calculated

value of 0.58E-6/yr is a factor of 36 higher than the reported value of 0.16E-7. Since the frequencies of failure for the entire sequence 8 fragility curve are less than 0.01, the factor of 36 is partially due to the conservative approximation used in this review analysis as discussed above. Subsequently, an exact probability equation was developed for sequence 8 (i.e., bin VI) and an "exact" value of 0.15E-6 was calculated, which is a factor of 10 larger than the value of 0.16E-7 reported in the OPRA.

Note that the calculated values in Table 3.7 are referred to as the Base Case in subsequent comparisons. Figures 3.18a and 3.18b show the fragility curves for the Base Case 8 sequences and total core melt. It is also interesting to note that in the process of integrating the hazard and core melt fragility curve 25%, 50%, and 75% of the mean frequency of core melt (i.e., 0.75E-4/yr) is accumulated at 0.17g, 0.21g, and 0.28g, respectively. This verifies the importance of the hazard curve accuracy in the acceleration region less than 0.4g.

In the next sensitivity analysis, the effect of including components 38 through 41 listed in Table 3.5 (i.e., letdown storage tank, BWST, core flooding tank, and LPI cooler) was investigated. These components were eliminated from the OPRA analysis as discussed in Section 3.4.2. Table 3.8 gives the comparison of the Base Case with the case where components 38 through 41 were included. As can be seen, the inclusion of components 38 through 41 has no significant effect on the results.

Next, the effect of alternative values for the random failures and operator errors was investigated, i.e., the effect of using the logic models developed in this review. Table 3.9 shows the values that were assumed in the OPRA (i.e., Base Case) and the alternative values that are proposed. Table 3.10 gives the comparison of the results of the Base Case with the alternative case. As seen in Table 3.10, the total core melt frequency is only slightly higher than the base case, i.e., 0.82E-4 compared with 0.75E-4. In addition, a bounding case analysis in which all operator errors were considered to occur with certainty was performed. Table 3.11 shows the results for the bounding case as compared to the Base Case.

The effect of considering relay chatter capacity values typical of past PRAs, i.e., median capacity equal to 0.6g, was investigated next. In addition, each relay chatter capacity was paired in parallel with a manual reset event (MANRESET) which was assigned a frequency of failure on demand value of 0.5. Table 3.12 compares the effects of using typical relay chatter capacities from past PRA analyses with the Base Case. As seen the effect is small. Relay chatter has produced significant effects in other PRA studies[18]; however, because of the low capacities of other components the effects of including relay chatter are masked. If more realistic capacities were used for the structural components, it is likely that relay chatter would be a more prominent contributor.

The effect of increasing the block wall and condenser capacities was investigated next. Table 3.13 presents the results of three cases. The first case considers more realistic capacities for the block walls in the auxiliary building and in the CT4 blockhouse (i.e., components 5 and 9, respectively) as discussed in Section 3.3.4. In the first column the block wall capacities are increased to realistic values, causing a decrease in core melt by a factor of

0.7. Even if the block wall components capacities are significantly increased (e.g., median capacities equal to 10.0g), the decrease in core melt (see second column) is essentially the same as shown in the first column. Finally, the last column in Table 3.13 shows the effect of increasing the condenser capacity to a more realistic value as discussed in Section 3.3.4. This change is added to the block wall capacity change as indicated in column 1. The combined change decreases the core melt capacity by a factor of 0.6 times the Base Case, as shown in the third column of Table 3.13.

Next, the effect of eliminating Jocassee Dam, the pressurizer and reactor coolant pump components was investigated. As given in the first column of Table 3.14, the mean frequencies of failure for sequences 2, 3, 6, and 8 become essentially zero when Jocassee Dam is eliminated. This result was expected since failure of long-term cooling is prevented if Jocassee Dam does not fail. As shown in the last two columns, elimination of the pressurizer and condenser components causes major decreases to sequences 7 and 8; however, since these sequences are not large contributions to core melt, the total mean frequency of core melt is essentially unchanged.

In the next series of analyses, components were systematically removed (i.e., median capacities increased to 10g) to investigate the robustness of the results. Table 3.15 gives the components which were removed for each of the eight cases considered. Cases 1 and 2 represent primarily the removal of singles and some doubles. Cases 3 through 8 remove additional doubles from the model. Table 3.16 gives the mean frequencies of failure for the Base Case and each of the analysis cases listed in Table 3.15 for the 8 sequences and for total core melt.

As can be seen in Table 3.16, cases 1 and 2 cut the core melt mean frequency approximately in half compared to the Base Case. Also sequences 3, 4, and 6 go to zero and sequences 2 and 8 are also essentially zero, leaving sequences 1, 5, and 7 which contribute significantly to core melt. As components 4, 6, 11, and 17 (i.e., 600/208-V transformer, transformer CT3, 4160/600-V transformers and pressurizer supports) are sequentially included in the list of eliminated components, the mean frequencies of failure stay essentially the same (see analysis cases 3 through 6). In case 7 when component 1 (offsite power) is added, sequences 1, 5, and 7 and total core melt drop to essentially zero. Case 8 shows the results if component 1 is eliminated, but components 4, 6, 11, and 17 are added back in. When this is done, the mean frequencies of failure increase and are similar to the results obtained for cases 3 through 6.

3.5 References

1. Commonwealth Edison Company, Zion Nuclear Plant Units 1 and 2 Probabilistic Safety Study, Dockets 50-295 (Unit 1) and 50-304 (Unit 2), September 8, 1981, available at NRC Public Document Room.

2. Power Authority of the State of New York and Consolidated Edison Company of New York, Indian Point Probabilistic Safety Study, Units 2 and 3, Dockets 50-247 (Unit 2) and 50-286 (Unit 3), March 5, 1982, available at NRC Public Document Room.

3. Berry, D. L. et al., "Review and Evaluation of the Zion Probabilistic Safety Study," Prepared for U. S. Nuclear Regulatory Commission, NUREG/CR-3300, May 1984.

4. Kolb, G. J. et al., "Review and Evaluation of the Indian Point Probabilistic Safety Study," Prepared for U. S. Nuclear Regulatory Commission, NUREG/CR-2934, December, 1982.

5. Bernreuter, D. L., J. B. Savy, R. W. Mensing, and D. H. Chung, "Seismic Hazard Characterization of the Eastern United States: Methodology and Interim Results for Ten Sites," Lawrence Livermore National Laboratory, Prepared for U.S. Nuclear Regulatory Commission, NUREG/CR-3756, 1984.

6. Algermissen, S. T., D. M. Perkins, P. C. Thenhaus, S. L. Hanson, and B. L. Bender, "Probabilistic Estimates of Maximum Accelertion and Velocity in Rock in the Contiguous United States," U.S. Geological Survey, Open-File Report 82-1033, 1982.

7. Electric Power Research Institute, "Seismic Hazard Methodology for Nuclear Facilities in the Eastern United States," Prepared by Dames and Moore, EPRI Project No. P101-29, April 1985 (Draft, in Peer Review).

8. U.S. Geological Survey, "Studies Related to the Charleston, South Carolina, Earthquake of 1886 - Tectonics and Seismicity," Geological Survey Professional Paper 1303, 1983.

9. Talwani, P. and J. Cox, "Paleoseismic Evidence for Recurrence of Earthquakes Near Charleston, South Carolina," Science, Vol. 229, July 26, 1985.

10. NUS Corporation, "Limerick Generating Station - Severe Accident Risk Assessment," Prepared for Philadelphia Electric Company, 1983.

11. Northeast Utilities Service Company, "Millstone Unit 3 Probabilistic Safety Study," August, 1983.

12. Pickard, Lowe, and Garrick, Inc., "Seabrook Station Probabilistic Safety Assessment," Prepared for Public Service of New Hampshire and Yankee Atomic Electric Company, 1983.

13. American Nuclear Society and Institute of Electrical and Electronic Engineers, "PRA Procedures Guide," Prepared for U.S. Nuclear Regulatory Commission, NUREG/CR-2300, January 1983.

14. Bari, R. A. et al., "Probabilistic Safety Analysis Procedures Guide," Prepared for U. S. Nuclear Regulatory Commission, NUREG/CR-2815, Vol. 1, August, 1985.

15. Cornell, Ca. A., "Probabilistic Seismic Hazard Analysis: A 1980 Assessment, "Proceedings of the Joint U.S.-Yokoslavia Conference on Earthquake Engineering, Skopje, Yugoslavia, 1980.

16. Azarm, M. A. et al., "A Review of the Limerick Generating Station Severe Accident Risk Assessment," Prepared for U.S. Nuclear Regulatory Commission, NUREG/CR-3493, July, 1984.

17. Garcia, A. A. et al., "A Review of the Millstone 3 Probabilistic Safety Study," Prepared for U.S. Nuclear Regulatory Commission, NUREG/CR-4142, May, 1984.

18. Shiu, K. K. et al., "A Review of the GESSAR-II BWR/6 Standard Plant Seismic Probabilistic Risk Assessment," Prepared for U.S. Nuclear Regulatory Commission, NUREG/CR-4135P, Vol. 2, August, 1985.

19. Garcia, A. A. et al., "A Review of the Seabrook Station Probabilistic Safety Assessment," Prepared for U.S. Nuclear Regulatory Commission, December 12, 1984, Draft.

20. Bernreuter, D. L., "Seismic Hazard Analysis: Application of Methodology, Results and Sensitivity Studies," Lawrence Livermore National Laboratory, Prepared for U.S. Nuclear Regulatory Commission, Vol. 4, NUREG/CR-1582, 1981.

21. Algermissen, S. T. and D. M. Perkins, "A Probabilistic Estimate of Maximum Acceleration in Rock in the Contiguous United Stats," U.S. Geological Survey, Open File Report 76-416, 1976.

22. Bollinger, G. A., "Seismic Activity in the Southeastern United States," Earthquake Engineering Conference, University of South Carolina, 1975.

23. Taber, S., "The South Carolina Earthquake of January 1, 1913, "Bulletin of the Seismological Society of America, Vol. 3, 1913.

24. Bollinger, G. A., A Catalog of Southeastern United States Earthquakes, 1754 through 1974, in Research Div. Bulletin 101, Dept. of Geological Sciences, Virginia Polytechnic Institute and State University, Blacksburg, VA, 1975.

25. McGuire, R. K., "Effects of Uncertainty in Seismicity on Estimates of Seismic Hazard for the East Coast of the United States," Bulletin of the Seismological Society of America, Vol. 67, No. 3, 1977.

26. Computer Science Corporation, "The Correlation of Peak Ground Acceleration Amplitude with Seismic Intensity and Other Physical Parameters," National Technical Information Service, PB-263972, 1977.

27. TERA Corporation, "Seismic Hazard Analysis, A Methodology for the Eastern United States," Prepared for Nuclear Regulatory Commission, NUREG/CR-1582, Vol. 2, 1980.

28. Bollinger, G., "Reinterpretation of the Intensity Data for the 1886 Charleston, South Carolina Earthquake," USGS Professional Paper 1028, Printing Office, Washington, 1977.

29. Trifunac, M. D. and A. G. Brady, "On the Correlation of Seismic Intensity Scales with Peaks of Recorded Strong Ground Motion," Bulletin of the Seismological Society of America, Vol. 65, No. 139, 1975.

30. Newmark, N. M., "A Study of Vertical and Horizontal Earthquake Spectra," WASH 1255, Nathan M. Newmark Consulting Engineering Services, Prepared for U.S. Atomic Energy Commission, April 1973.

31. Kennedy, R. P., W. P. Tong, and S. A. Short, "Earthquake Design Ground Acceleration Versus Instrumental Peak Ground Acceleration," Prepared for Nathan M. Newmark Consulting Engineering Services, Structural Mechanics Associates Report No. SMA 12501.01R, December 1980.

32. McGuire, R. K., "EQRISK, Evaluation of Earthquake Risk to a Site," Open-File Report 76-67, U.S. Geological Survey, 1976.

33. L. E. Cover et al., "Handbook of Nuclear Power Plant Seismic Fragilities," Prepared for U.S. Nuclear Regulatory Commission, NUREG/CR-3558, June, 1985.

34. Duke Power Specification OS027B.00000002, Specification for the Seismic Displacement Response Spectra for the Turbine, Auxiliary, Reactor and Standby Shutdown Facility Buildings, Rev. 3, February 20, 1980.

35. Budnitz, R. J. et al., "An Approach to the Quantification of Seismic Margins in Nuclear Power Plants," Prepared for U.S. Nuclear Regulatory Commission, NUREG/CR-4334, July, 1985.

36. Worrell, R. B. and D. N. Stack, "A SETS User s Manual for the Fault Tree Analyst," NUREG/CR-0465, April 1980.

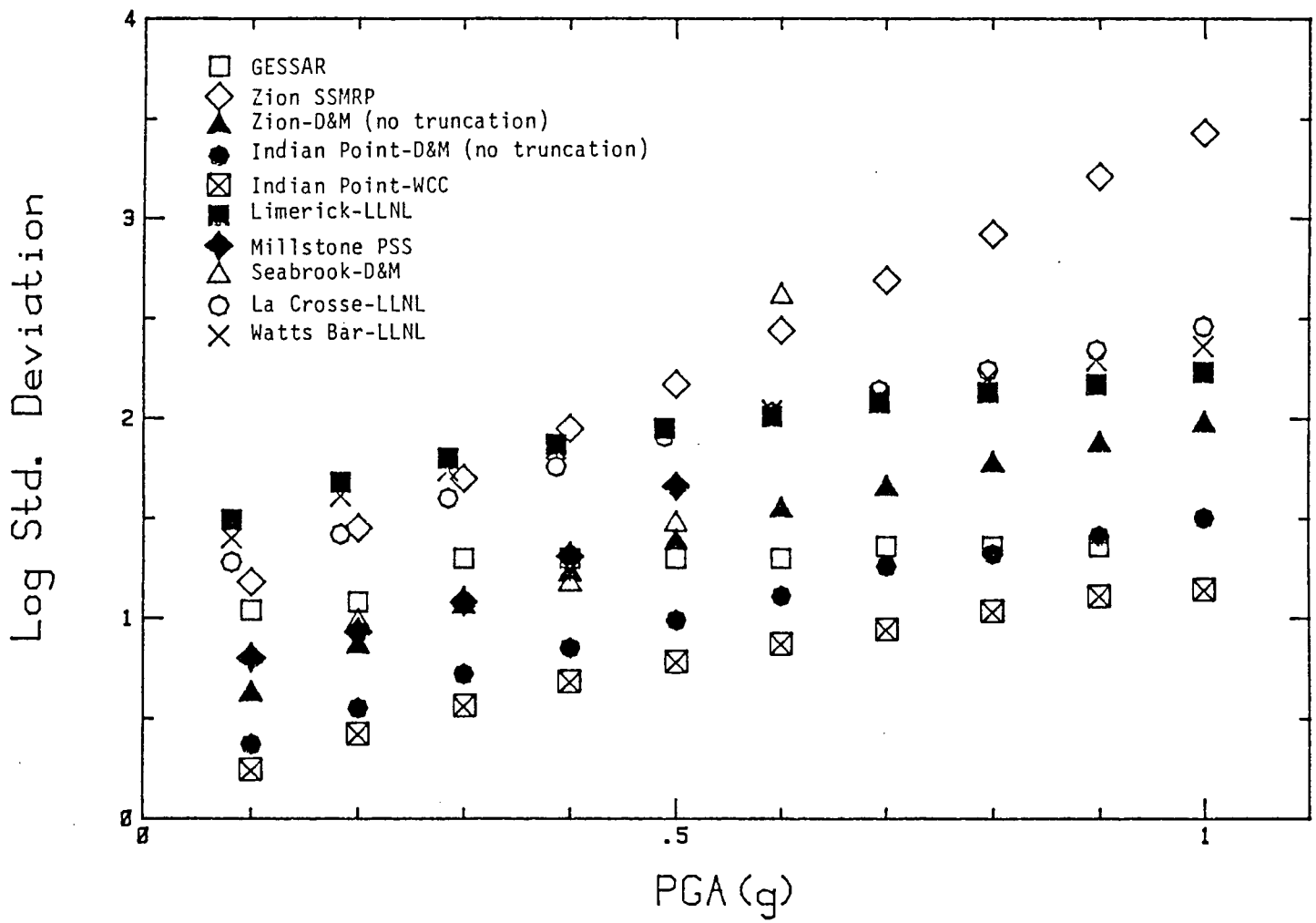

Figure 3.1 An example of the uncertainty in seismic hazard estimates.

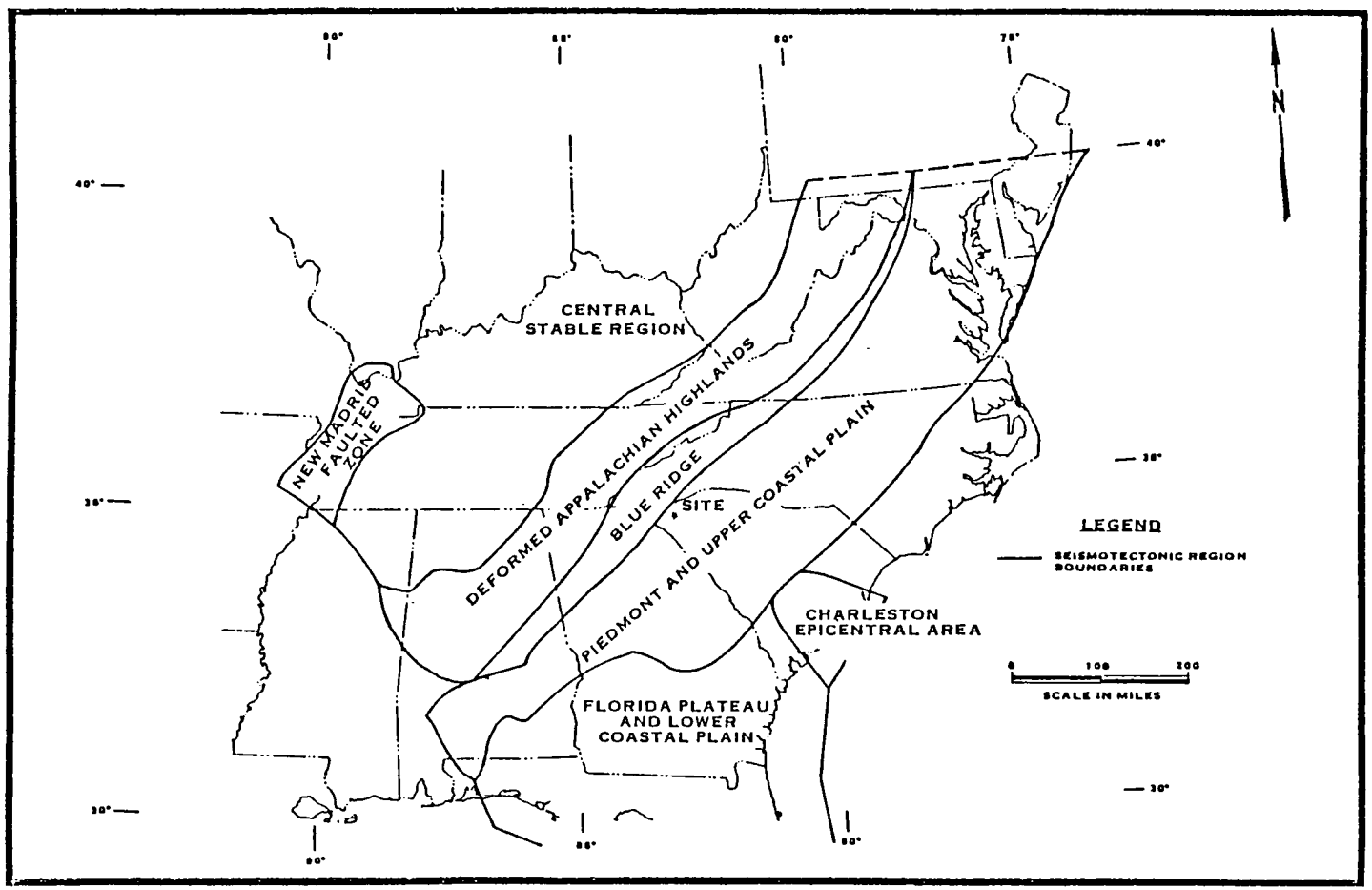

Figure 3.2 Oconee study seismotectonic model.

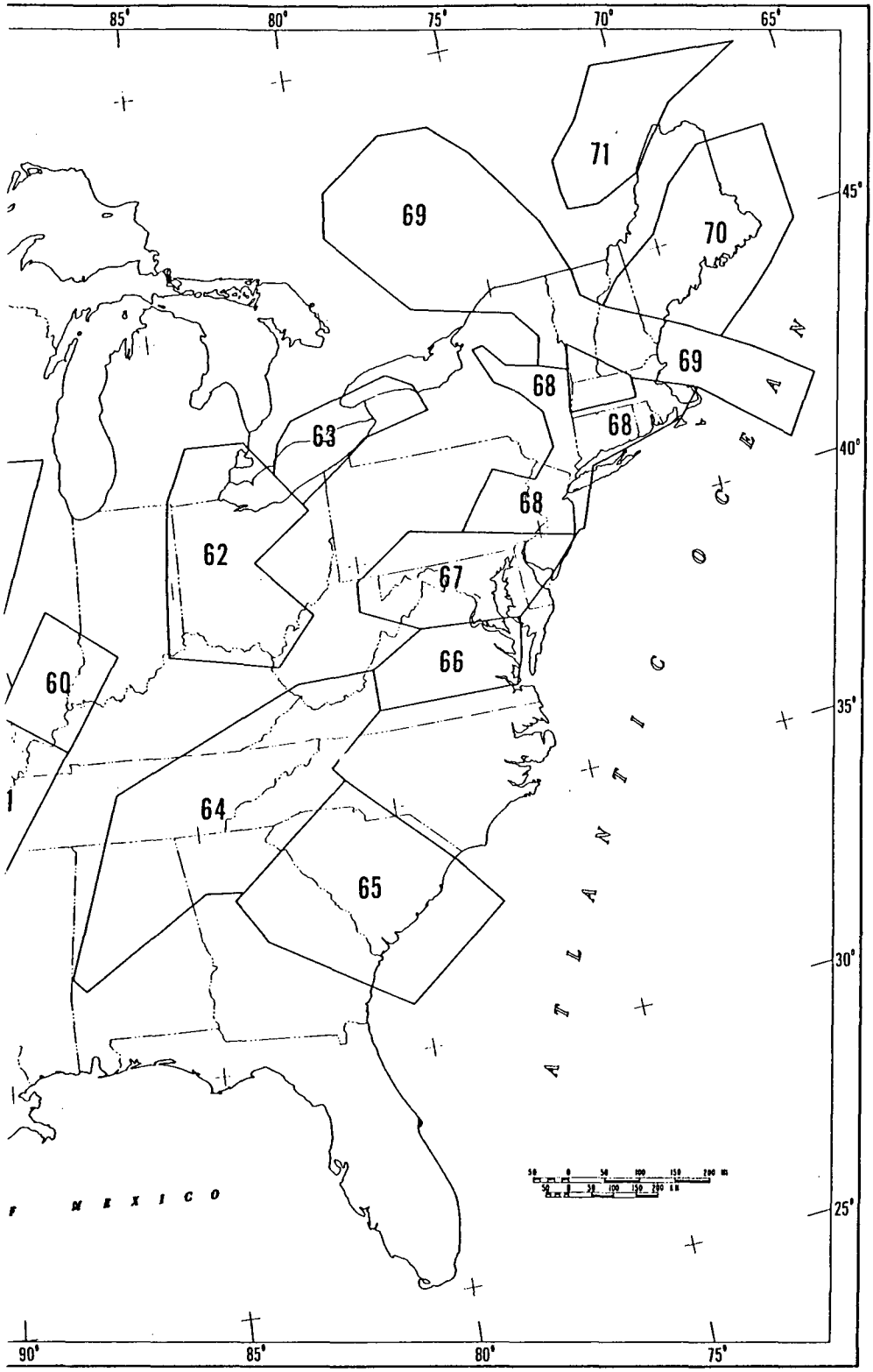

Figure 3.3 U.S. Geological Survey seismic sources near the Oconee site (Reproduced from Reference 21).

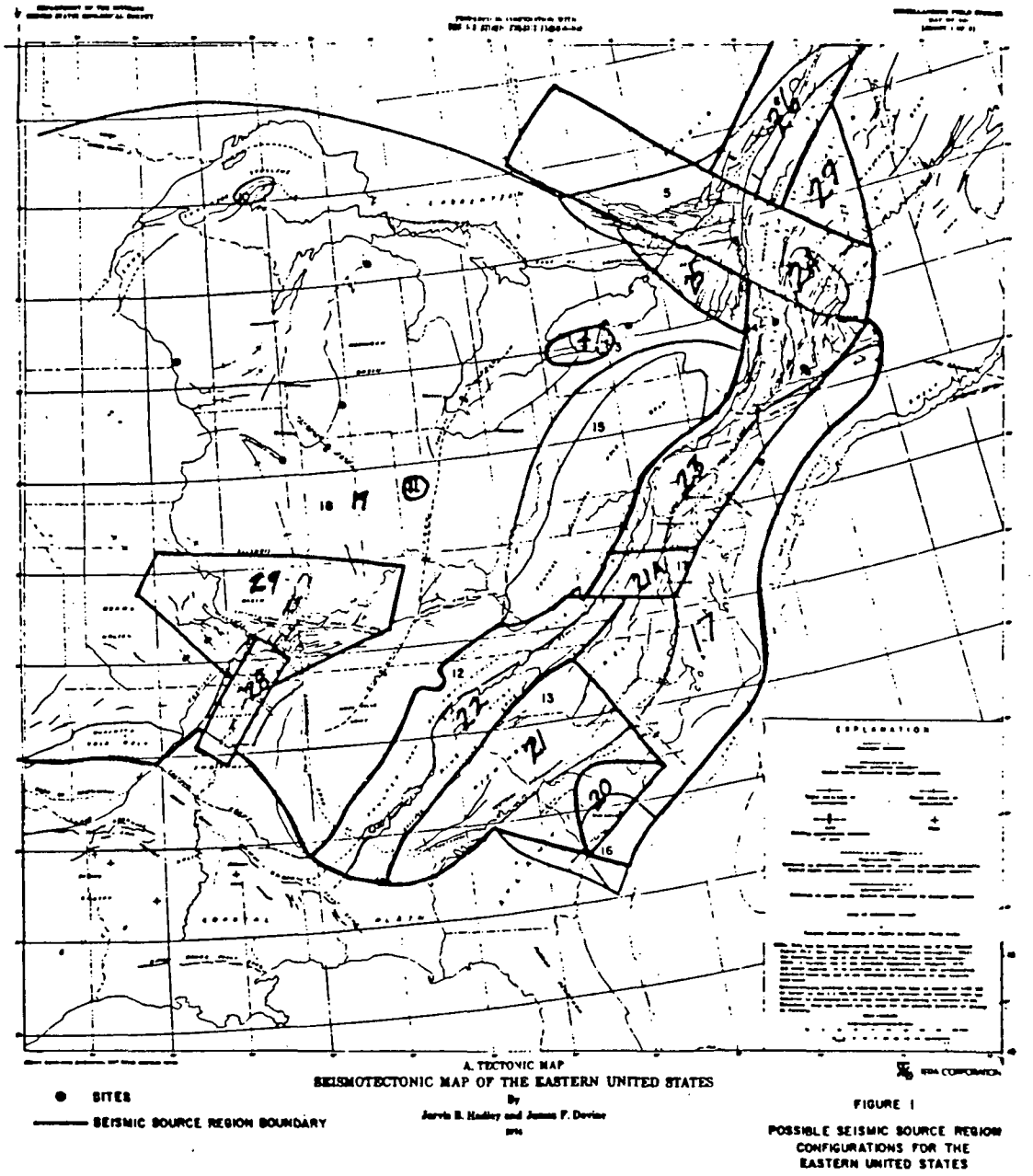

Figure 3.4 Seismic source areas for Expert 3 in LLNL seismic hazard study (Reproduced from Reference 20).

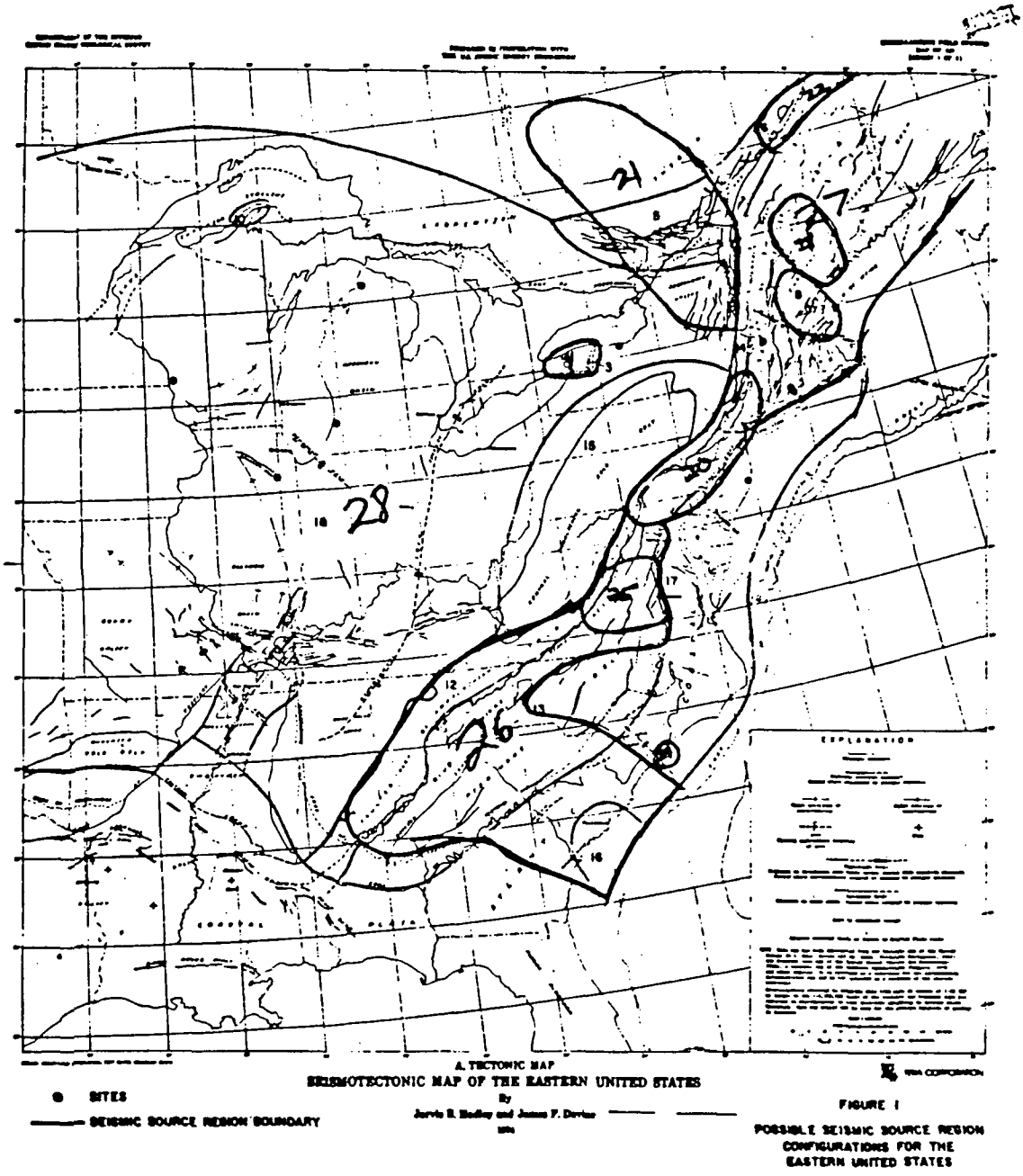

Figure 3.5 Seismic source areas for Expert 11 in LLNL seismic hazard study (Reproduced from Reference 20).

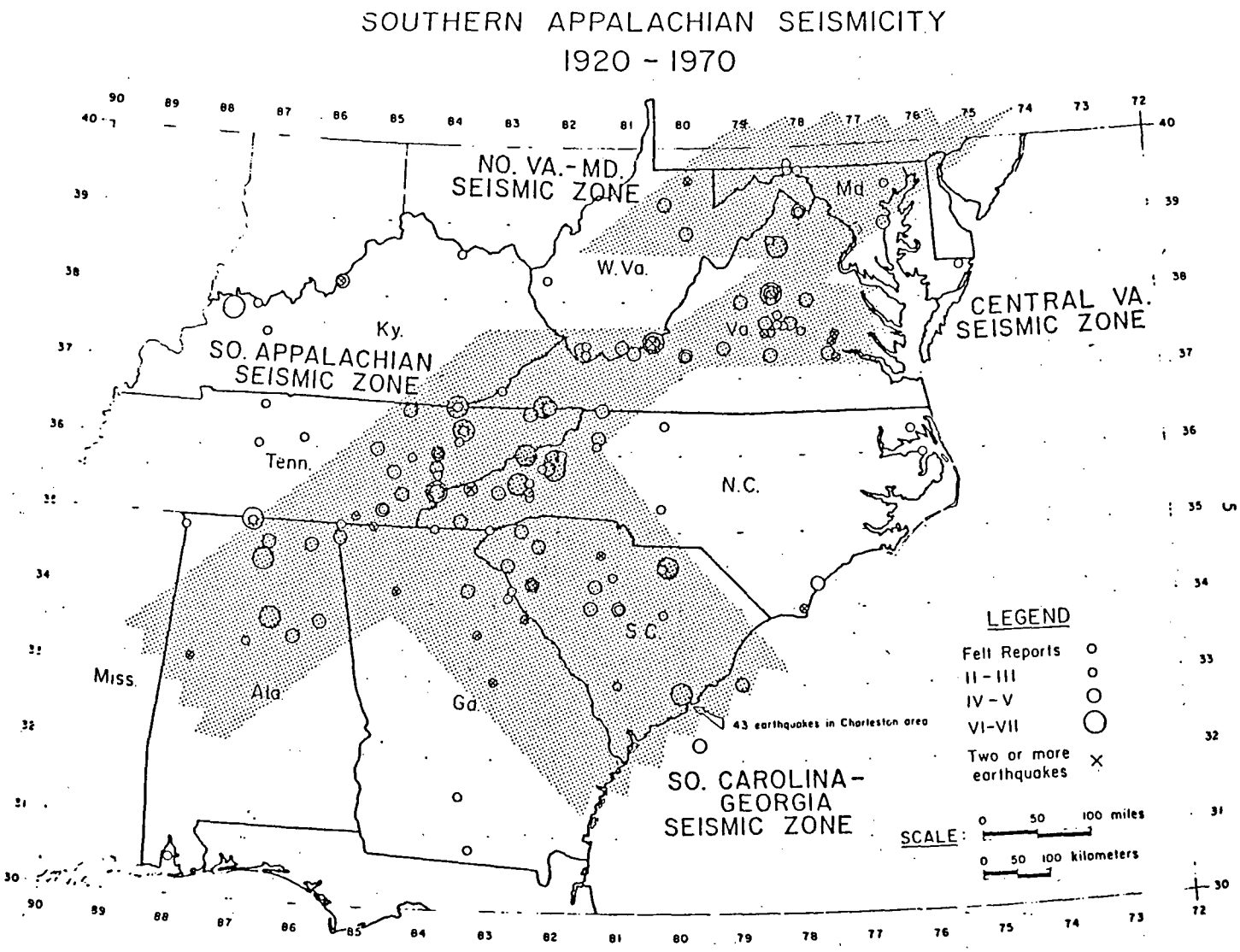

Figure 3.6 Seismic source areas suggested by Bollinger (Reproduced from Reference 22).

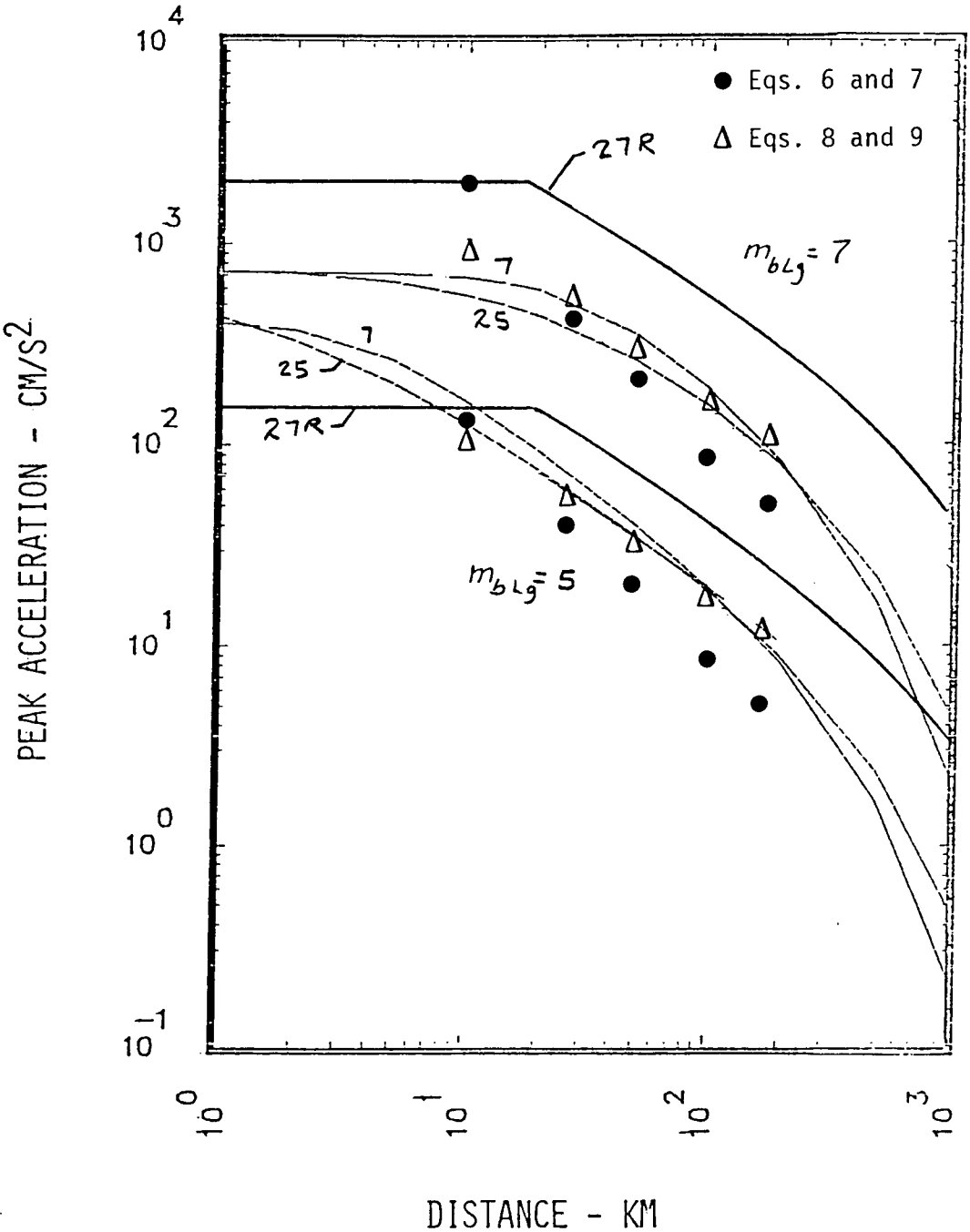

Figure 3.7 Comparison of the best estimate ground motion models from the LLNL ground motion panel for magnitudes 5 and 7 and the Oconee attenuation relationships.

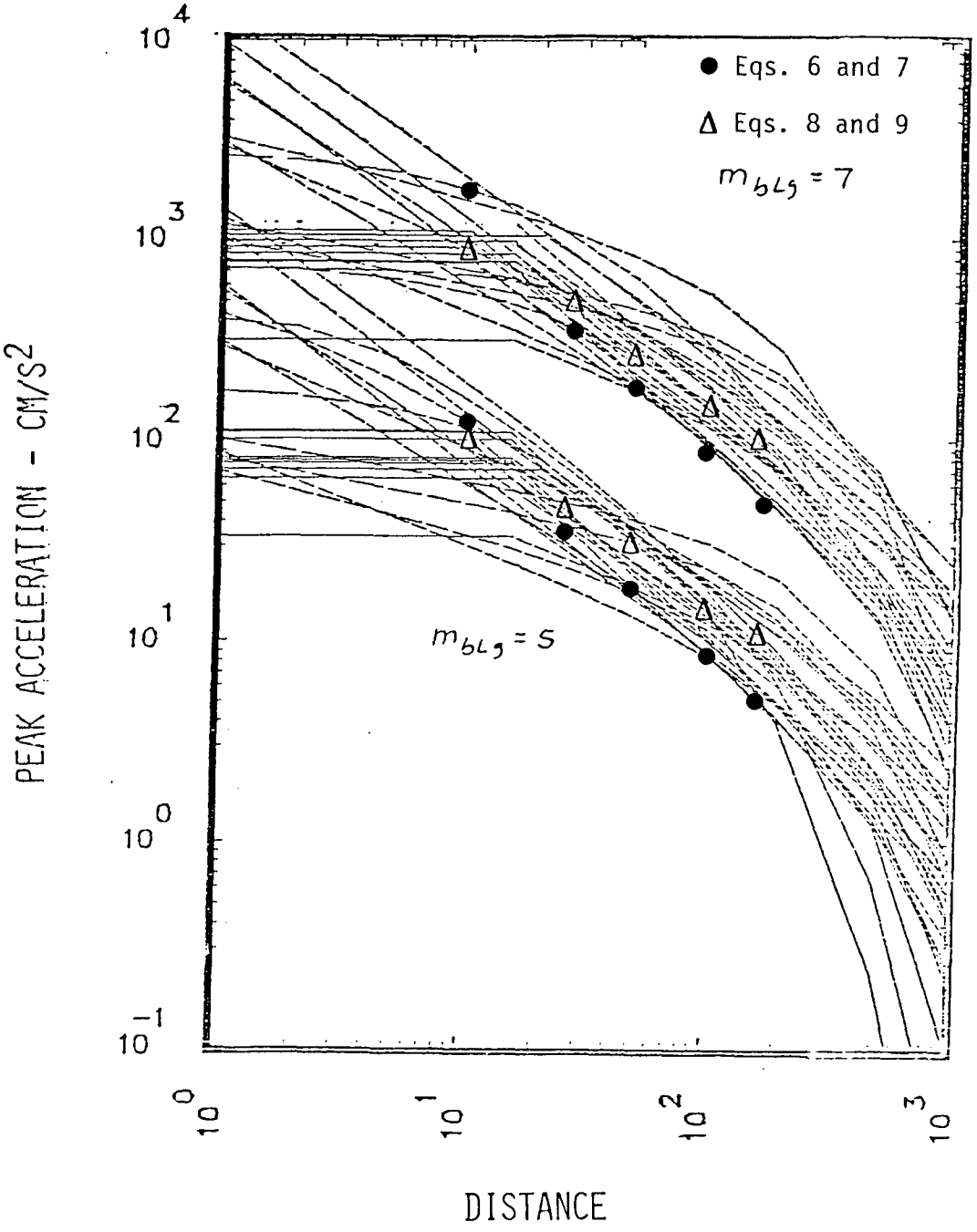

Figure 3.8 Comparison of the Oconee attenuation models and other models provided by the SHCP ground motion experts.

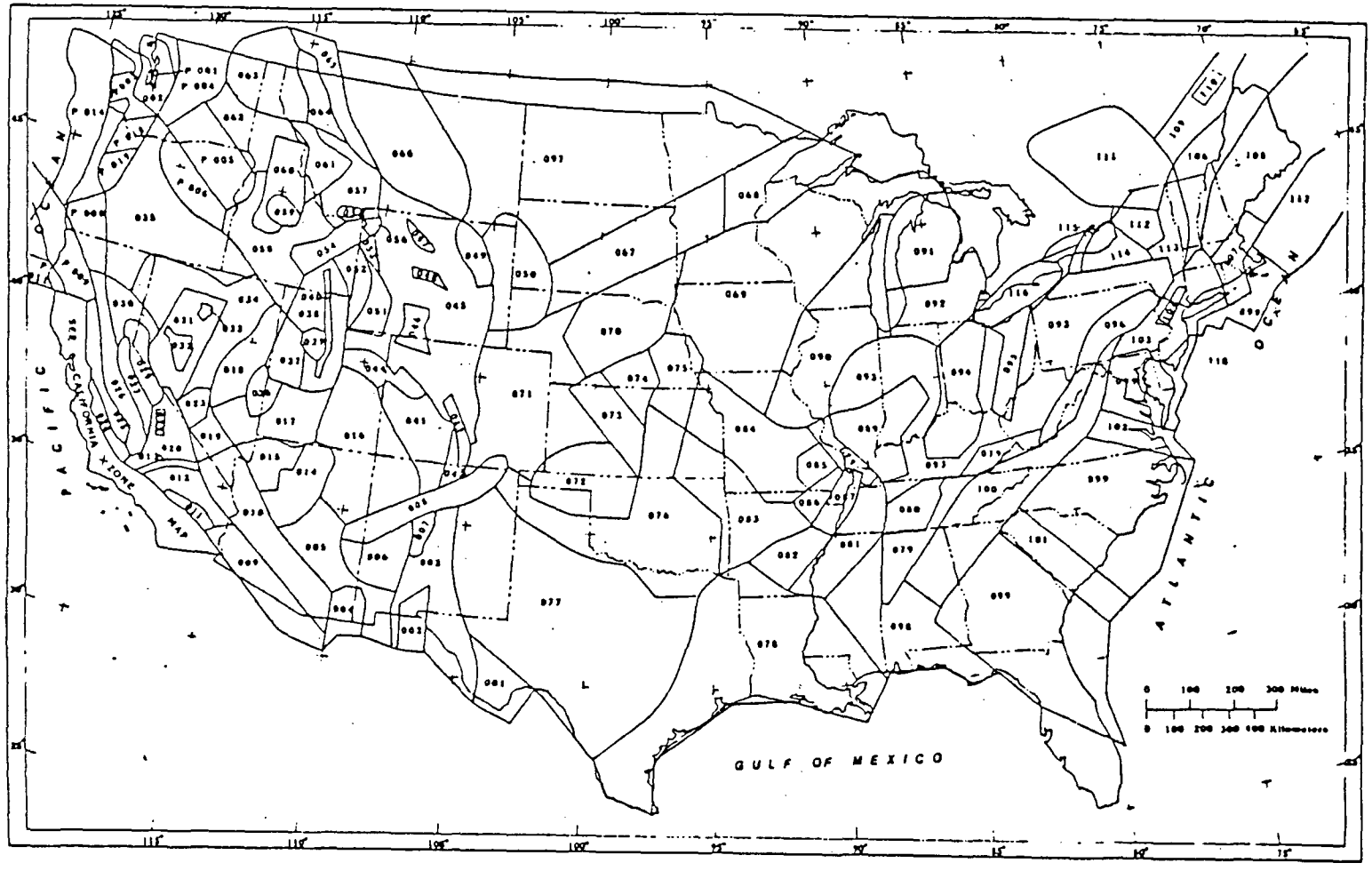

Figure 3.9 USGS seismic source areas defined in their 1982 study (Reproduced from Reference 6).

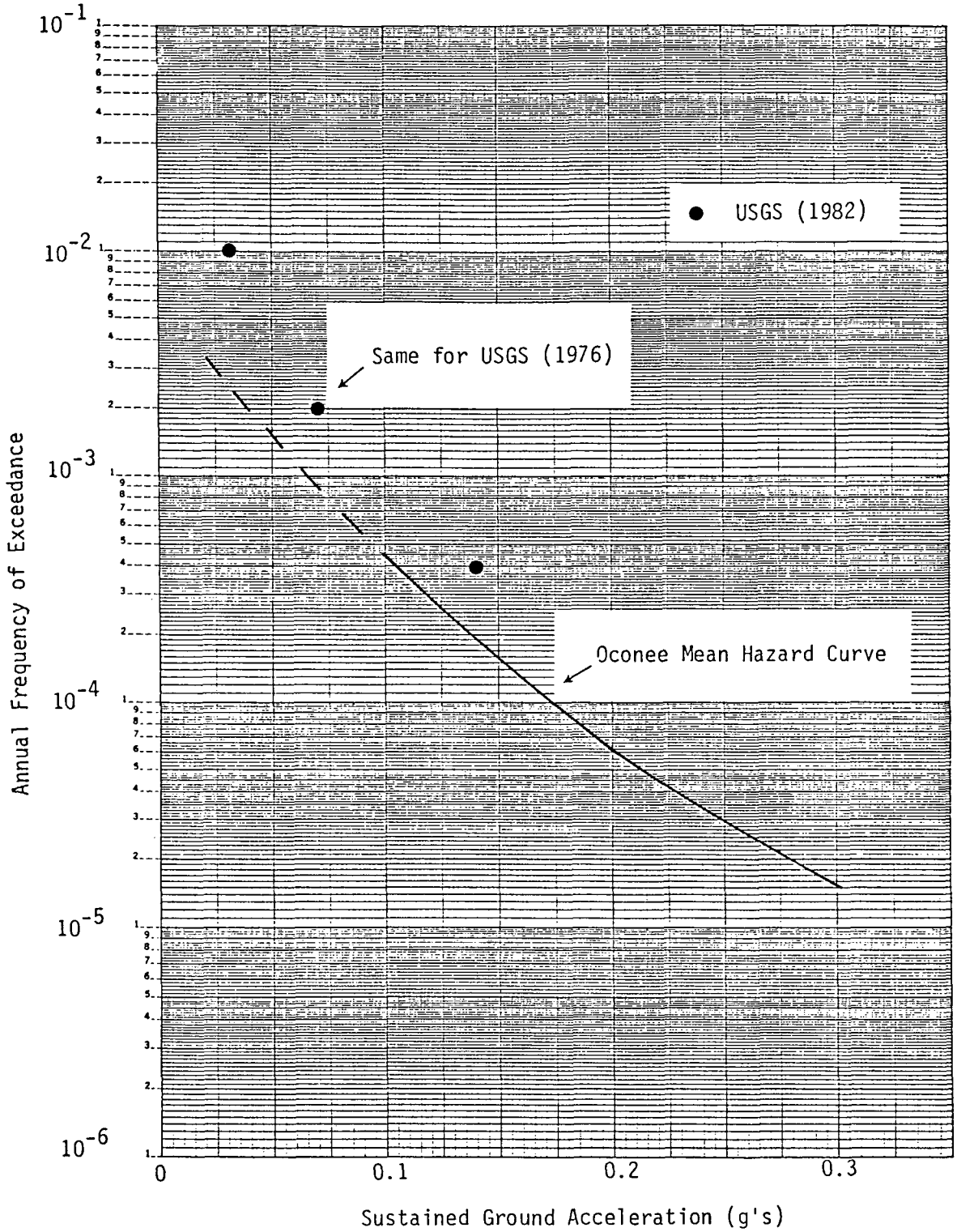

Figure 3.10 Comparison of the 1976 and 1982 USGS studies and the mean Oconee seismic hazard curve.

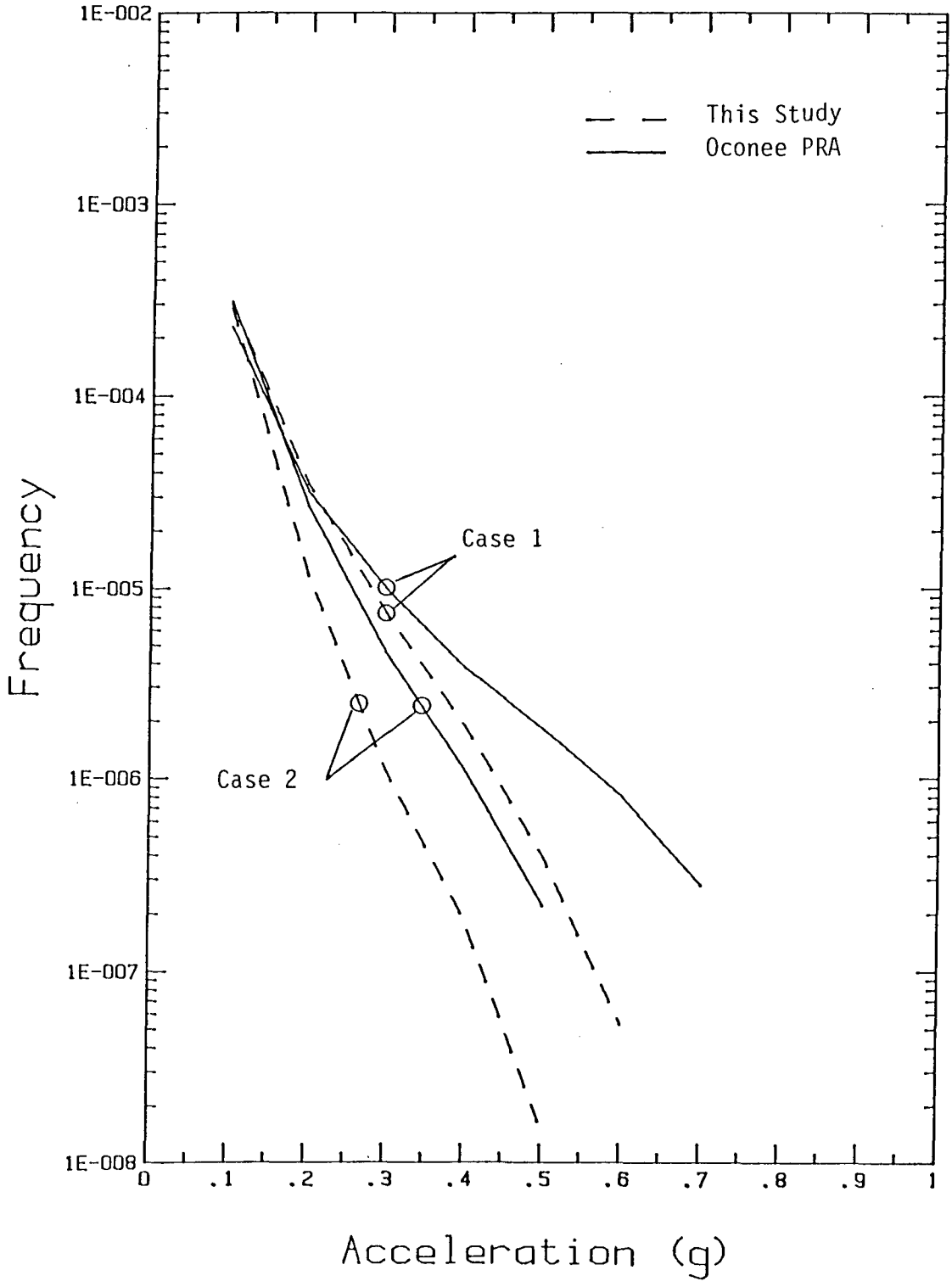

Figure 3.11 Comparison of cases 1 and 2.

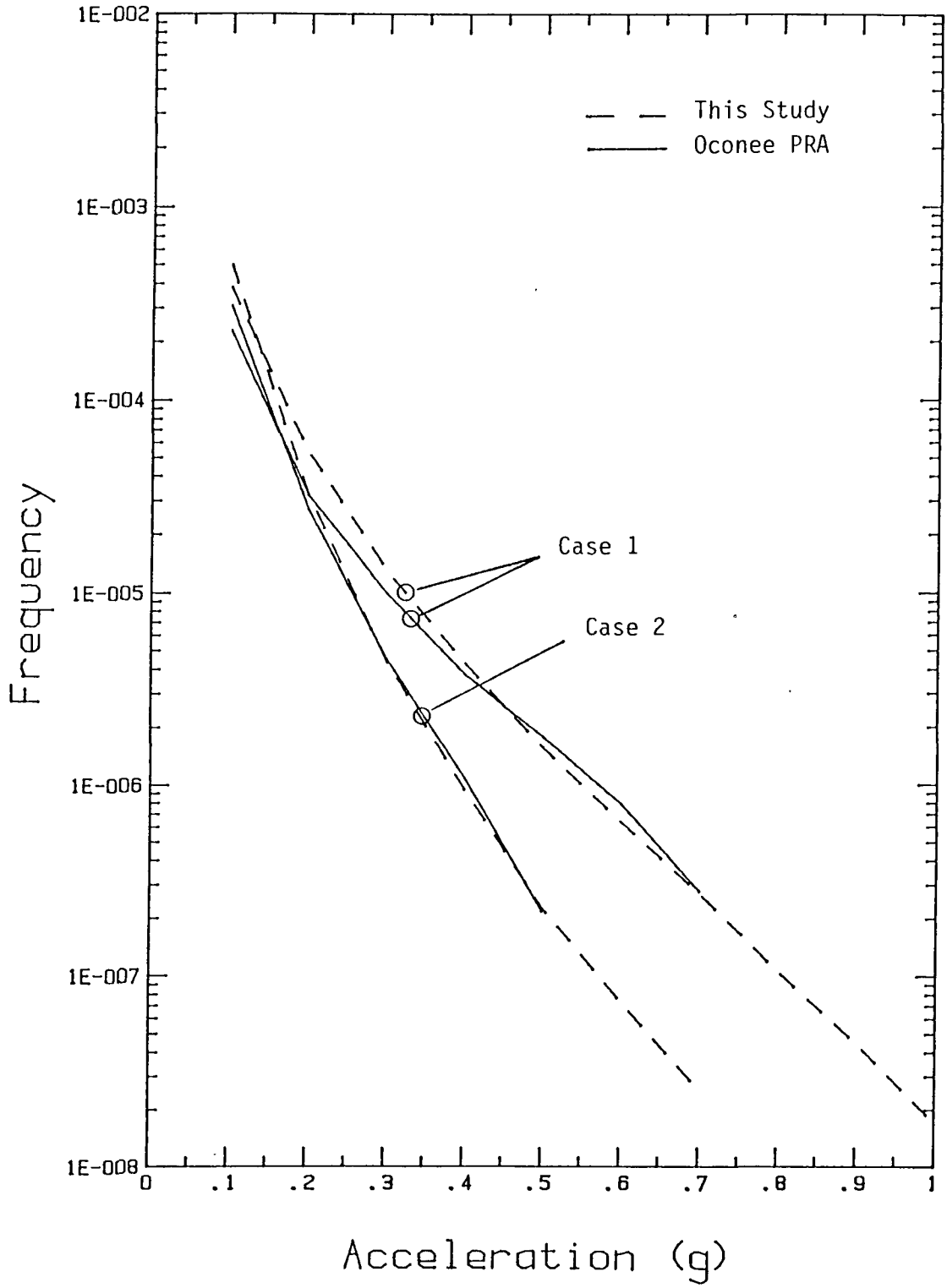

Figure 3.12 Comparison of cases 1 and 2 results using a three standard deviation truncation.

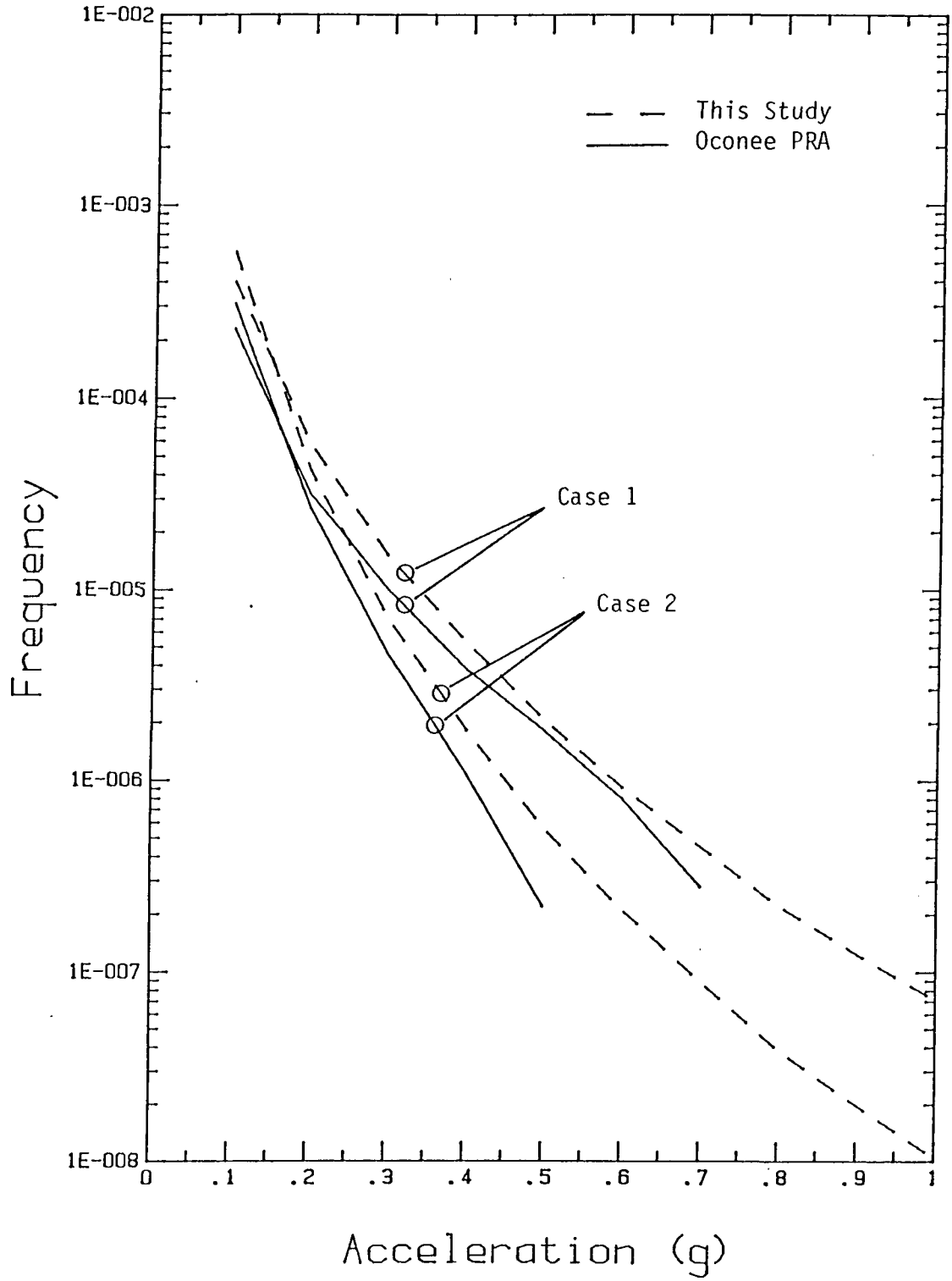

Figure 3.13 Comparison of cases 1 and 2 using a five standard deviation truncation.

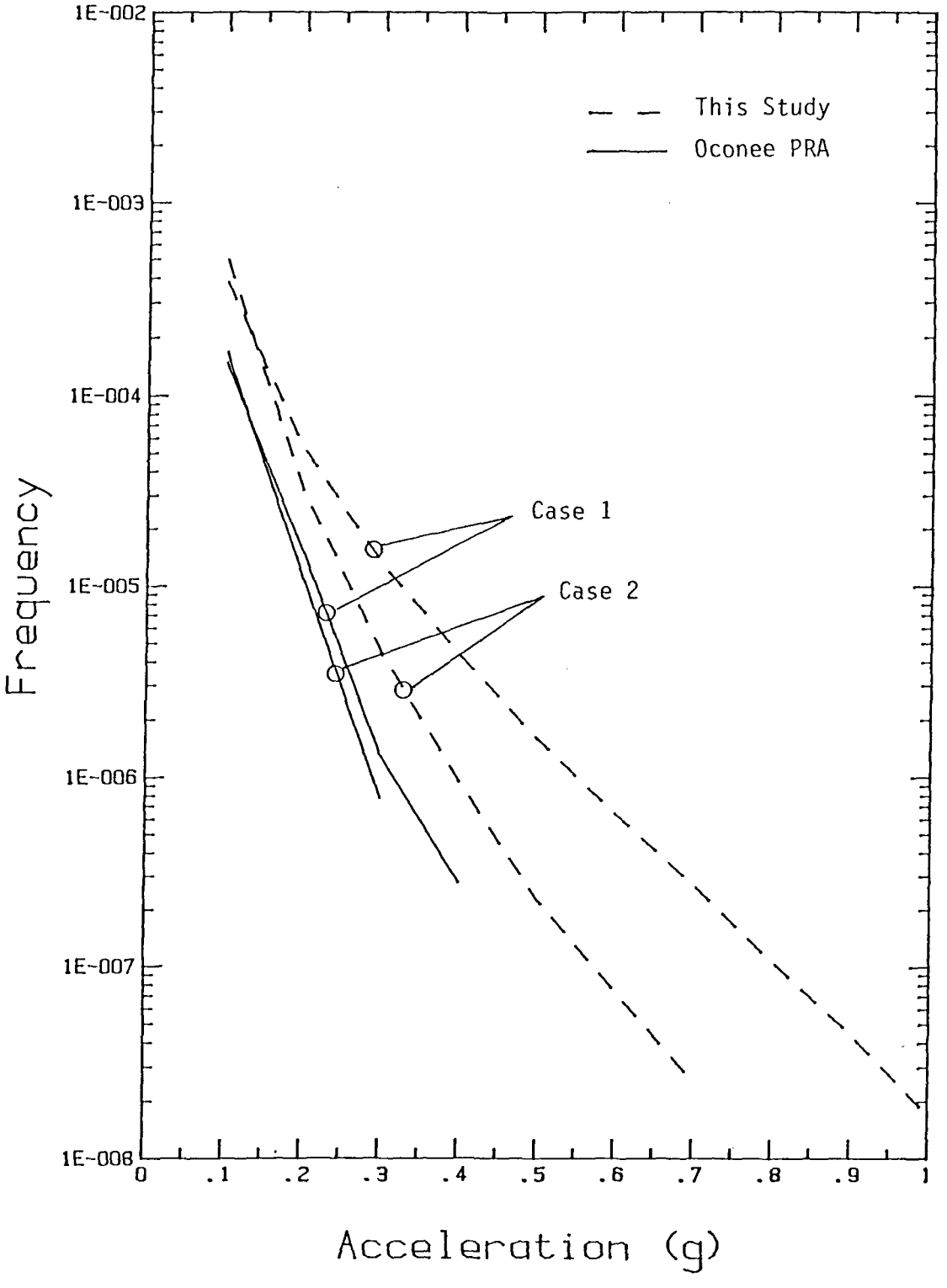

Figure 3.14 Comparison for cases 1 and 2 hypothesis 1, I_{max} = VIII for the Piedmont and upper coastal plain source.

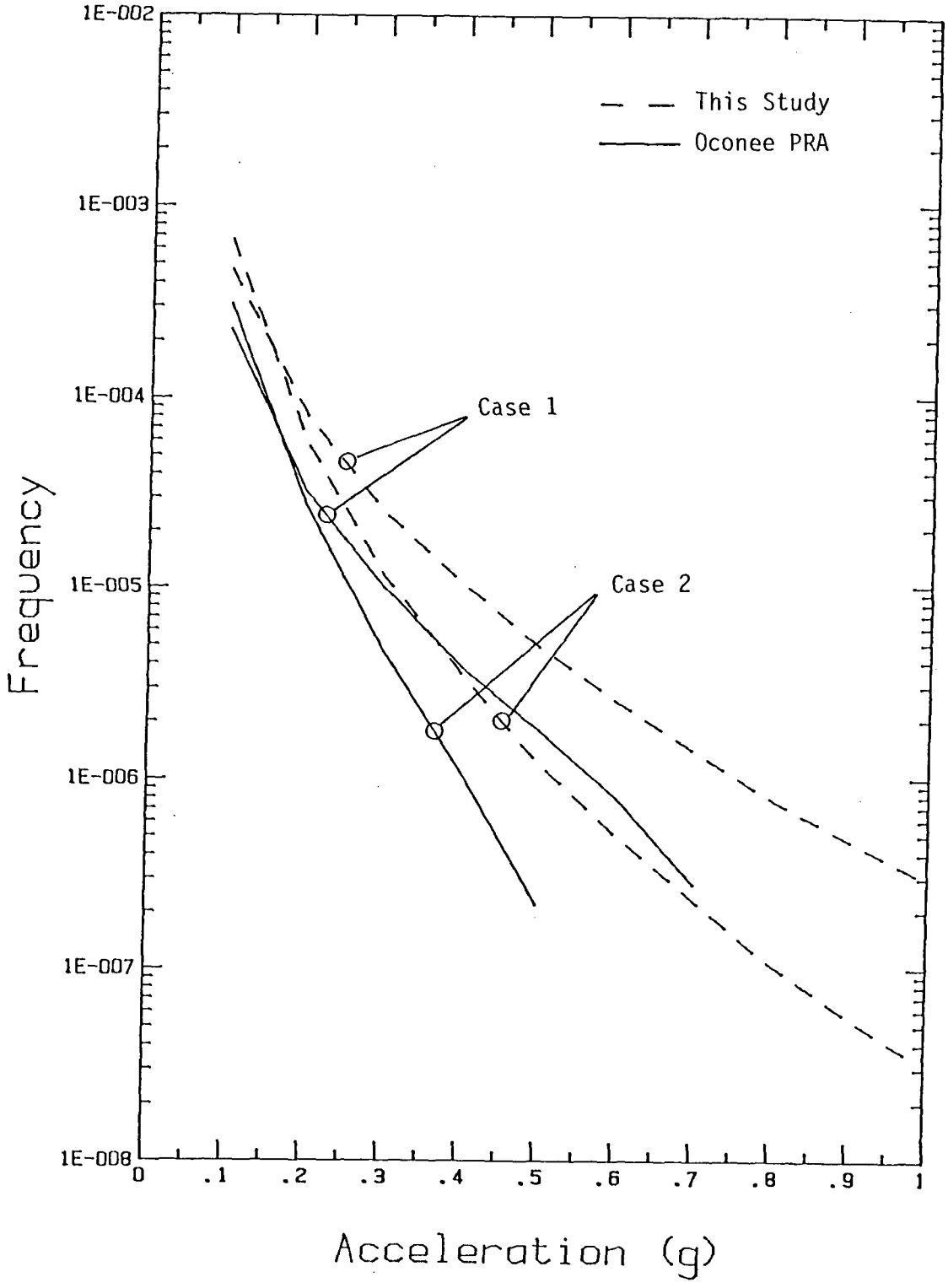

Figure 3.15 Comparison for cases 1 and 2, hypothesis 2, I_{max} = IX for the Piedmont and upper coastal plain source.

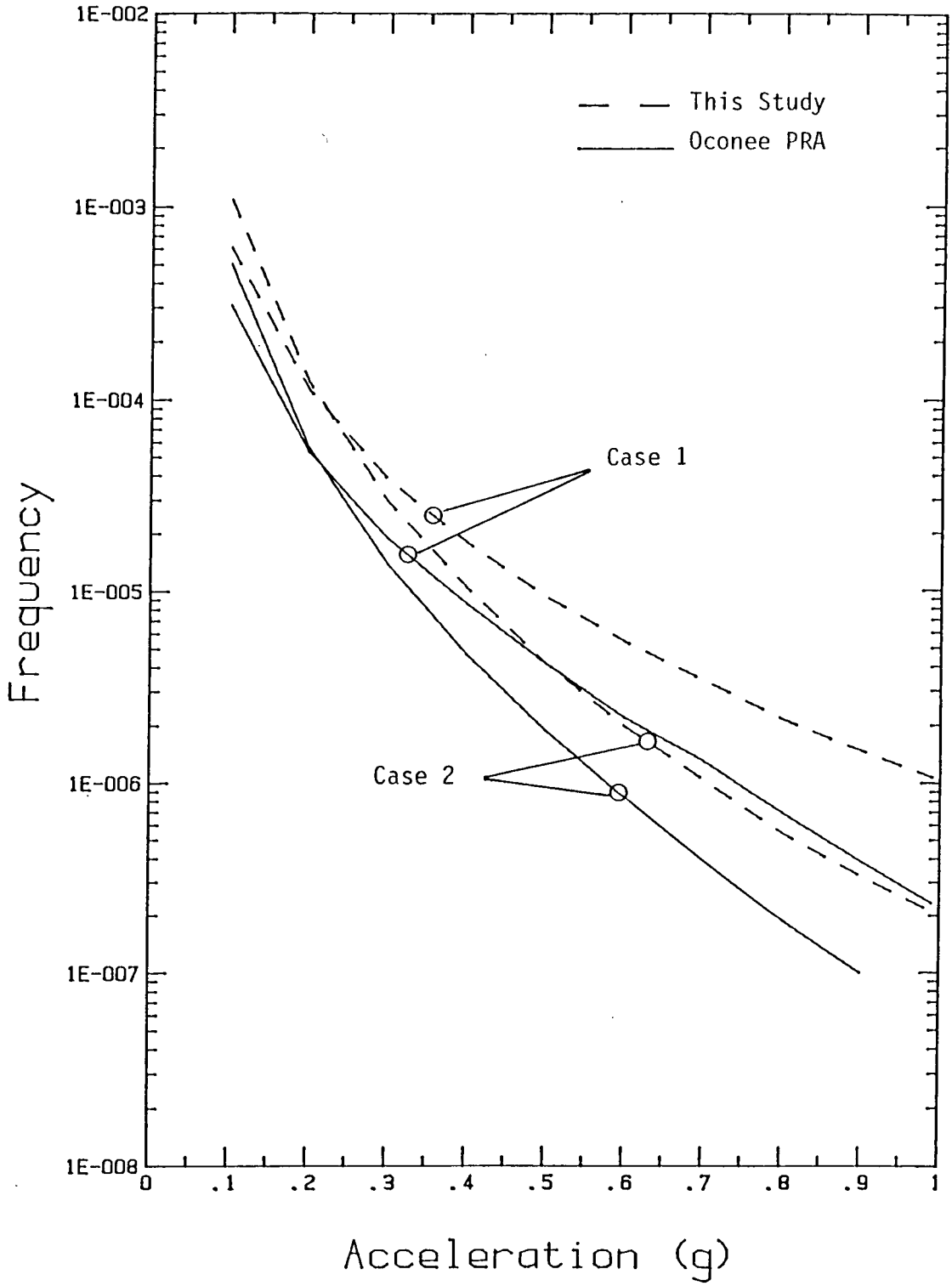

Figure 3.16 Comparison for cases 1 and 2, hypothesis 3, I_{max} = X for the Piedmont and upper coastal plain source.

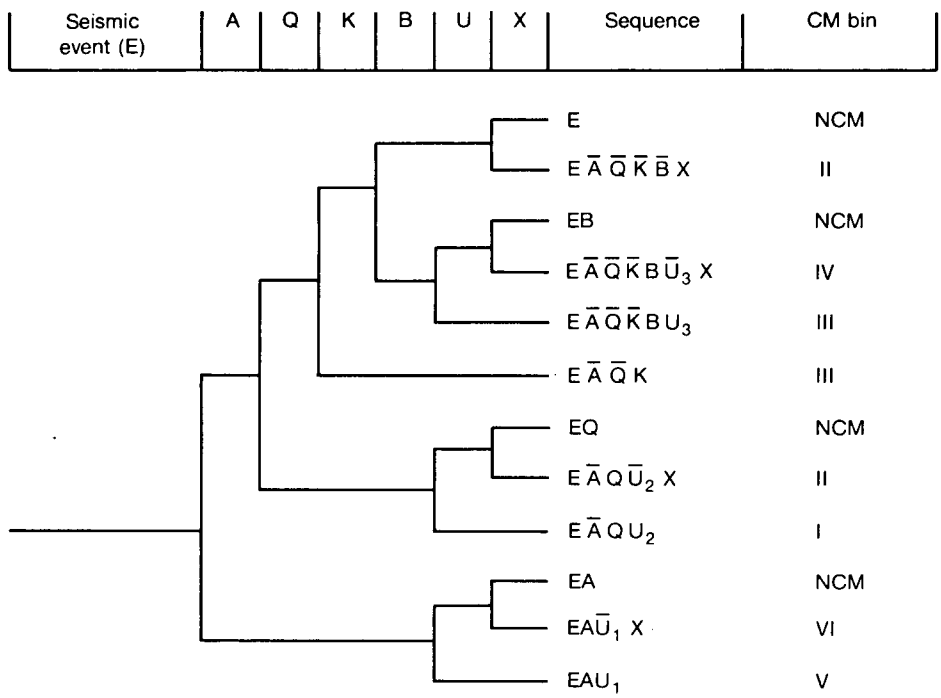

Figure 3.17 OPRA seismic event tree.

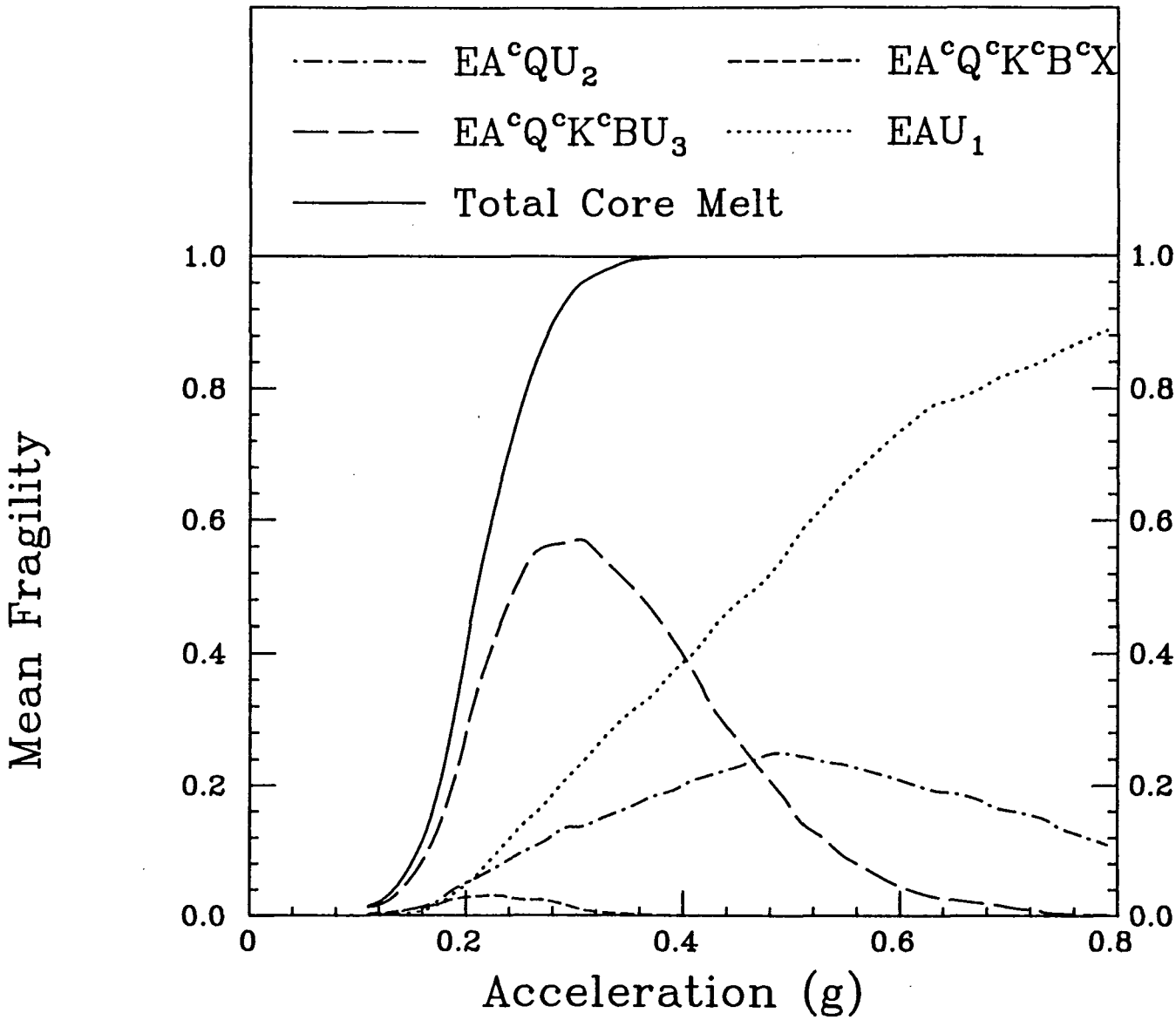

Figure 3.18a Sequence and core melt fragility curves.

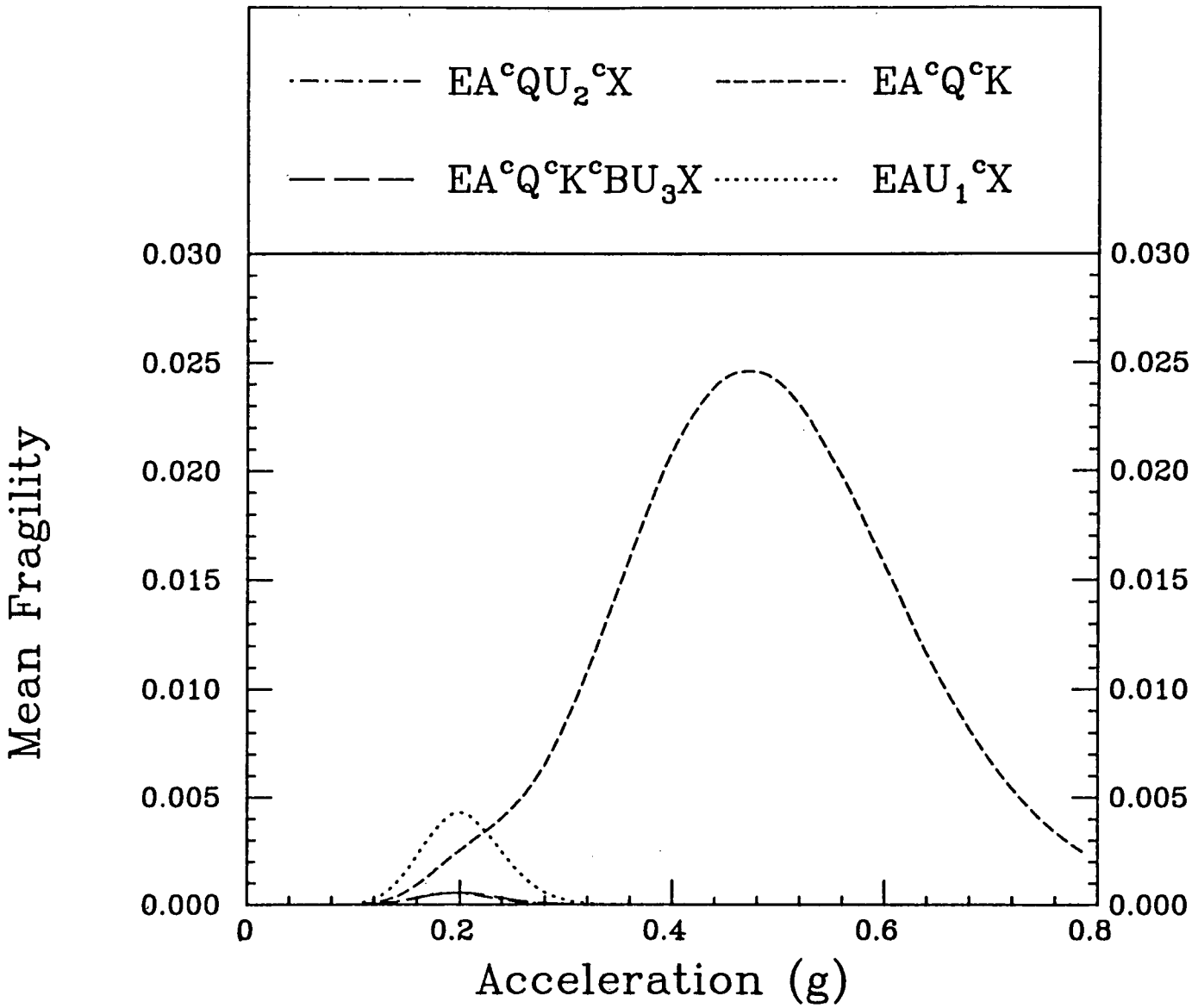

Figure 3.18b Sequence fragility curves.

Table 3.1 Oconee Seismic Hazard Analysis Seismicity Parameters

Seismotectonic Region	Area (Square Miles)	Activity Rate ($I_0 \geq V$)	Activity Rate per sq. mile ($\times 10^{-6}$ yr)	b_I-value	Maximum Earthquake Hypothesis MMI 1	2	3
Piedmont and Upper Coastal Plain	127,400	0.609	4.78	0.56	VII	VIII	IX
Blue Ridge	28,850	0.282	10.91	0.59	VII	VIII	IX
Charleston Zone	8,800	0.173	19.66	0.48	X	X	X
Deformed Appalachian Highlands	63,160	0.473	7.49	0.59	VIII	VIII	IX
Central Stable Region	309,400	0.882	2.85	--	VIII	VIII	IX
New Madrid Zone	12,140	0.764	62.9	--	XII	XII	XII
Florida Platform	210,000	0.054	0.26	--	VI	VII	VII
Subjective Probability (Maximum Earthquake)					0.5	0.3	0.2

Table 3.2 LLNL Seismic Hazard Characterization Project Seismicity Parameter Estimates (Reference 5)

Seismic Expert	Host* Zone	Self Wt.	Activity Rate Events/sq mile ($I_0 \geq V$) x 10^{-6}/yr	b_I-value	I_{max} Low	Best	Upper
1	3	9	9.80	0.63	8.5	8.8	9.0
2	29	6	5.34	0.448	8.5	9.5	10.1
3	11	5	2.13	0.47	8.5	10.1	11.5
4	9	7	2.85	0.45	8.5	8.9	9.3
5	10	8	1.17	0.64	7.0	8.0	9.0
6	10	5	14.52	0.545	11.5	12.5	13.5
7	8	7	2.25	0.45	7.5	8.5	9.5
8	-	-	-	-	-	-	-
9	-	-	-	-	-	-	-
10	28	6.3	0.16	0.50	7.1	7.5	8.5
11	7	6.3	1.57	0.50	8.9	9.5	10.5
12	3	8.5	13.05	0.48	7.7	7.9	8.1
13	8	6.5	4.93	0.51	8.9	9.5	9.9

*From the experts' base map.

Table 3.3 Maximum Sustained Accelerations

Attenuation Model	Standard Deviation		MM Intensity						
			VI	VII	VIII	IX	X	XI	XII
		Median (g's)	0.0065	0.116	0.206	0.365	0.650	1.156	2.057
	0.26		0.216	0.382	0.681	1.210	2.153	3.829	6.812
Eq. (7)	0.31		0.271	0.482	0.858	1.524	2.712	4.822	8.579
	0.39		0.392	0.696	1.241	2.203	3.921	6.973	12.406
		Median (g's)	0.059	0.102	0.177	0.307	0.533	0.923	1.600
	0.26		0.195	0.338	0.586	1.017	1.764	3.057	5.298
Eq. (9)	0.31		0.245	0.426	0.739	1.281	2.221	3.850	6.673
	0.39		0.355	0.616	1.068	1.853	3.212	5.567	9.649

Table 3.4 USGS Seismic Source Parameters for Sources Near the Oconee Site

Source Area	Activity* Rate (I_0 = V)	b_I-value	M_{max}	I_{max}
		1976 Study, Reference 21 (See Figure 3.2-3)		
64	0.544	0.59	6.1	VIII
65	0.199	0.33	7.3	X
		1982 Study, Reference 6 (See Figure 3.2-9)		
99	0.248	0.50	7.3	X
100	0.423	0.50	7.3	X
101	0.187	0.50	7.3	X

*Number of Modified Mercalli Intensity events/year.

Table 3.5 Component Fragility Parameter Values

	Component	Variability / Median (g)	β_r	β_u	HCLPF(g)*
1.	Offsite-power insulators	0.20	0.20	0.25	0.12
2.	100-kV Lee Feeder	0.20	0.20	0.25	0.12
3.	Condenser	0.21	0.14	0.14	0.16
4.	600/208-V Transformer	0.27	0.20	0.41	0.12
5.	Auxiliary Building Masonry Walls	0.28	0.23	0.28	0.15
6.	Transformer CT3	0.30	0.21	0.43	0.13
7.	Transformer CT5	0.30	0.21	0.43	0.13
8.	Transformer CT4	0.31	0.17	0.26	0.19
9.	Transformer CT4 Blockhouse	0.31	0.27	0.31	0.15
10.	HPSW Elevated Storage Tank	0.35	0.30	0.52	0.11
11.	4160/600-V Transformers	0.40	0.20	0.41	0.18
12.	Feedwater Heaters	0.40	0.30	0.52	0.13
13.	Jocassee Dam	0.48	0.40**	0.32**	0.18
14.	High Voltage Bus Ducting	0.56	0.30	0.53	0.18
15.	Keowee Dam (using east intake fragility)	0.58	0.32**	0.34**	0.24
16.	Upper Surge Tank	0.62	0.26	0.47	0.23
17.	Pressurizer Supports	0.62	0.20	0.28	0.35
18.	Letdown Coolers	0.65	0.27	0.40	0.27
19.	Reactor Coolant Pump Supports	0.72	0.30	0.44	0.26
20.	Main Feeder Buses	0.72	0.30	0.62	0.19
21.	Standby Buses	0.72	0.30	0.62	0.19
22.	SSF 600/120-V Transformer	0.73	0.24	0.44	0.29
23.	SSF 600/208/120-V Transformer	0.73	0.24	0.44	0.29
24.	SSF 600/208-V Transformer	0.73	0.24	0.44	0.29
25.	Auxiliary Building Shear Walls	0.74	0.21	0.25	0.43
26.	Letdown Line Piping	0.85	0.29	0.50	0.29
27.	Reactor Vessel Internals	0.86	0.29	0.37	0.36
28.	Auxiliary Building Moment Frames	0.94	0.28	0.28	0.50
29.	SSF Diesel Oil Storage Tank	1.00	0.25	0.43	0.40
30.	Reactor Vessel Skirt	1.18	0.21	0.29	0.64
31.	Large Reactor Coolant Pipe	1.23	0.32	0.43	0.44
32.	SSF Diesel Generator	1.42	0.31	0.50	0.46
33.	SSF dc Batteries and Racks	1.59	0.30	0.51	0.52
34.	SSF Diesel Day Tank	1.95	0.27	0.54	0.63
35.	600-V Distribution Center	1.20	0.56	1.55	0.05
36.	4160-V Transformer	0.46	0.26	0.45	0.18
37.	SSF Electrical	2.00	N/A	N/A	N/A
38.	Letdown Storage Tank	0.47	0.24	0.48	0.18
39.	BWST	0.83	0.28	0.31	0.39
40.	Core Flooding Tank	1.33	0.28	0.53	0.43
41.	LPI Cooler	0.71	0.27	0.48	0.25

*HCLPF = 1.23 x Median x $e^{-1.645(\beta_r + \beta_u)}$.
**Values calculated based on fragility curves in Annex J3.

Table 3.6 Top Events for the Seismic Event Tree

Event Designation	Name
E	Seismic initiating event
A	Large-break LOCA
Q	Small-break LOCA
K	Failure of the reactor protection system
B	Failure of RCS heat removal
U_1	Failure of coolant injection (large-break LOCA)
U_2	Failure of coolant injection (small-break LOCA)
U_3	Failure of coolant injection (loss of all feedwater)
X	Failure of long-term cooling

Table 3.7 Comparison of Calculated Mean Frequency Values With Results in OPRA

Oconee PRA Bin	Sequence	Mean Frequency of Failure (per year) Calculated* Sequence	Calculated* Bin	OPRA	Ratio Calculated/ OPRA
I	1. $E\bar{A}QU_2$	0.99E-5	0.99E-5	0.11E-4	0.90
II	2. $E\bar{A}Q\bar{U}_2X$	0.80E-7	0.45E-5	0.26E-5	1.73
	3. $EA\bar{Q}\bar{K}BX$	0.44E-5			
III	4. $E\bar{A}\bar{Q}K$	0.16E-5	0.50E-4	0.46E-4	1.09
	5. $E\bar{A}\bar{Q}\bar{K}BU_3$	0.48E-4			
IV	6. $E\bar{A}\bar{Q}\bar{K}B\bar{U}_3X$	0.79E-7	0.79E-7	ε	
V	7. EAU_1	0.13E-4	0.13E-4	0.32E-5	4.06
VI	8. $EA\bar{U}_1X$	0.58E-6	0.58E-6	0.16E-7	36.25
	Total Core Melt	0.75E-4	0.75E-4	0.63E-4	1.19

*These values are referred to as the Base Case.

Table 3.8 Effect of Including Components 38 Through 41

Sequence	Mean Frequency of Failure (per year)	
	Including Components	Base Case
1. $E\overline{A}QU_2$	0.99E-5	0.99E-5
2. $E\overline{A}Q\overline{U}_2X$	0.97E-7	0.80E-7
3. $EA\overline{QKB}X$	0.43E-5	0.44E-5
4. $E\overline{AQ}K$	0.16E-6	0.16E-5
5. $E\overline{AQK}BU_3$	0.49E-4	0.48E-4
6. $E\overline{AQK}B\overline{U}_3X$	0.79E-7	0.79E-7
7. EAU_1	0.13E-4	0.13E-4
8. $EA\overline{U}_1X$	0.57E-6	0.58E-6
Total Core Melt	0.77E-4	0.75E-4

Table 3.9 Random Failure and Operator Error Mean Frequencies

Random Failures		Frequency of Failure on Demand	
		Base Case	Alternative Values
RCSRVLC	Closure of two SRVs (RCSRVLC)	0.1	0.1
R1	Main Feedwater (MFWRAND)	N/A	0.04
R2	Turbine-Driven EF (TDEFWRAND)	N/A	0.091
R3	Motor-Driven EF (MDEFWRAND)	N/A	0.01
R4	HPI (HPIRAND)	N/A	2.0E-4
R5	Low Pressure Injection (LPIRAND)	N/A	5.0E-4
Operator Errors			
OP1	Failure to transfer to EFW Suction given loss of 4160 VDC 600-V Power (OP1)	N/A	0.2
OP2	Failure to Transfer to EFW Suction given loss of power from Transformer CT3 (OP2)	N/A	0.15
OP3	Failure to activate SSF Feedwater (includes hardware) (SSFFDWF)	0.1	0.30
OP4	Failure to supply power from Lee Station (OPLEEH)	N/A	0.10
OP5	Failure to Transfer to Recirculation given small LOCA (OPRECH2)	N/A	3.0E-4
OP6	Failure to Transfer to Recirculation given large LOCA (OPRECH3)	N/A	0.05
OP7	Failure to provide cooling through "Feed and Bleed" (VTHPIH)	N/A	0.05

Table 3.10 Effect of Alternative Random Failure and Operator Error Frequencies

Sequence	Mean Frequency of Failure (per year)		Ratio Alternate/ Base Case
	Alternative Case*	Base Case*	
1. $E\overline{A}QU_2$	0.10E-4	0.99E-5	1.01
2. $E\overline{A}Q\overline{U}_2X$	0.89E-7	0.80E-7	1.11
3. $EA\overline{QKB}X$	0.39E-5	0.44E-5	0.89
4. $E\overline{AQ}K$	0.11E-5	0.16E-5	0.69
5. $E\overline{AQK}BU_3$	0.54E-4	0.48E-4	1.13
6. $E\overline{AQK}B\overline{U}_3X$	0.22E-6	0.79E-7	2.78
7. EAU_1	0.13E-4	0.13E-4	1.00
8. $EA\overline{U}_1X$	0.20E-5	0.58E-6	3.45
Total	0.82E-4	0.75E-4	1.09

*See Table 3.9 for assumed random failure and operator error frequencies.

Table 3.11 Bounding Cases: No Credit for Operators Actions
Mean Frequency of Failures (per year)

Sequence	Base Case	Bounding Case
1. $E\overline{A}QU_2$	0.99E-5	0.12E-4
2. $E\overline{A}Q\overline{U}_2X$	0.80E-7	0.64E-5
3. $EA\overline{QKB}X$	0.44E-5	0.20E-5
4. $E\overline{AQ}K$	0.16E-5	0.71E-6
5. $E\overline{AQK}BU_3$	0.48E-4	0.13E-3
6. $E\overline{AQK}B\overline{U}_3X$	0.79E-7	0
7. EAU_1	0.13E-4	0.14E-4
8. $EA\overline{U}_1X$	0.58E-6	0.78E-5
Total Core Melt	0.75E-4	0.17E-3

Table 3.12 Effect of Relay Chatter

Sequence	Mean Frequency of Failure (per year)		Ratio Alternative/ Base Case
	Case with Relay Chatter	Base Case*	
1. $EA\overline{Q}U_2$	0.10E-4	0.99E-5	1.01
2. $E\overline{A}Q\overline{U}_2X$	0.58E-7	0.80E-7	0.73
3. $EA\overline{QKB}X$	0.43E-5	0.44E-5	0.98
4. $E\overline{AQ}K$	0.13E-5	0.16E-5	0.81
5. $E\overline{AQK}BU_3$	0.50E-4	0.48E-4	1.04
6. $E\overline{AQK}B\overline{U}_3X$	0.63E-7	0.79E-7	0.80
7. EAU_1	0.13E-4	0.13E-4	1.00
8. $EA\overline{U}_1X$	0.42E-6	0.58E-6	0.72
Total Core Melt	0.78E-4	0.75E-4	1.04

Table 3.13 Effect of Alternative Block Wall and Condenser Capacities

Sequence	Mean Frequency of Failure (per year)/Ratio*		
	Increased Block Wall Capacity a(5) = 2.0g a(9) = 0.9g	Increased Block Wall Capacity a(5) = 10.0g a(9) = 10.0g	Increased Block Wall and Condenser Capacity a(5) = 2.0g a(9) = 0.9g a(3) = 0.5g
1	0.80E-5/0.81	0.79E-5/0.80	0.48E-5/0.48
2	0.95E-7/1.19	0.95E-7/1.19	0.17E-6/0.21
3	0.57E-5/1.30	0.57E-5/1.30	0.63E-5/1.43
4	0.12E-5/0.69	0.12E-5/0.75	0.12E-5/0.75
5	0.28E-4/0.58	0.28E-4/0.58	0.24E-4/0.50
6	0.96E-7/1.22	0.96E-7/1.22	0.20E-6/0.25
7	0.12E-4/0.92	0.12E-4/0.92	0.87E-5/0.67
8	0.71E-6/1.22	0.71E-6/1.22	0.11E-5/0.19
Total Core Melt	0.54E-4/0.72	0.54E-4/0.72	0.45E-4/0.60

*Ratio of mean frequency of alternative case to Base Case. (See Table 3.7 for Base Case frequencies.)

Table 3.14 Effect of Eliminating Jocassee Dam, Pressurizer, and Reactor Coolant Pump Components from Analysis

Sequence	Mean Frequency of Core Melt (per year)/Ratio*		
	Eliminating Jocassee Dam	Eliminating Pressurizer	Eliminating Pressurizer and Condenser
1. $E\overline{A}QU_2$	0.99E-5/1.0	0.12E-4/1.21	0.13E-4/1.31
2. $E\overline{A}Q\overline{U}_2X$	/ 0	0.84E-7/1.05	0.84E-7/1.05
3. $EA\overline{QKB}X$	/ 0	0.45E-5/1.02	0.45E-5/1.02
4. $E\overline{AQ}K$	0.16E-5/1.0	0.17E-5/1.06	0.18E-5/1.13
5. $E\overline{AQK}BU_3$	0.48E-4/1.0	0.54E-4/1.13	0.57E-4/1.19
6. $E\overline{AQK}B\overline{U}_3X$	/ 0	0.83E-7/1.05	0.83E-7/1.05
7. EAU_1	0.13E-4/1.0	0.36E-5/0.28	0.51E-6/0.04
8. $EA\overline{U}_1X$	/ 0	0.49E-7/0.08	0.19E-8/ 0
Total Core Melt	0.71E-4/0.95	0.74E-4/0.99	0.74E-4/0.99

*Ratio of mean frequency of alternative case to Base Case (see Table 3.7 for Base Case frequencies).

Table 3.15 Components Removed From Base Case Plant System Model

Components Removed From Base Case Model*	Analysis Cases							
	1	2	3	4	5	6	7	8
3		X	X	X	X	X	X	X
5	X	X	X	X	X	X	X	X
13	X	X	X	X	X	X	X	X
14	X	X	X	X	X	X	X	X
18	X	X	X	X	X	X	X	X
20	X	X	X	X	X	X	X	X
21	X	X	X	X	X	X	X	X
25	X	X	X	X	X	X	X	X
26	X	X	X	X	X	X	X	X
27	X	X	X	X	X	X	X	X
28	X	X	X	X	X	X	X	X
30	X	X	X	X	X	X	X	X
4			X	X	X	X	X	
6				X	X	X	X	
11					X	X	X	
17						X	X	
1							X	X

*For component names, see Table 3.5.

Table 3.16 Effect of Removing Components From Base Case System Model

Sequence	Base Case	Analysis Case*							
		1	2	3	4	5	6	7	8
1. $EAQU_2$	0.99E-5	0.53E-5	0.18E-5	0.14E-5	0.14E-5	0.12E-5	0.15E-5	0.35E-13	0.13E-5
2. $EAQU_2X$	0.80E-7	0.14E-12	0.16E-12	0.19E-12	0.20E-12	0.20E-12	0.21E-12	0.29E-12	0.18E-12
3. EAQKBX	0.44E-5	0	0	0	0	0	0	0	0
4. EAQK	0.16E-5	0	0	0	0	0	0	0	0
5. $EAQKBU_3$	0.48E-4	0.25E-4	0.21E-4	0.20E-4	0.19E-4	0.19E-4	0.23E-4	0.43E-12	0.11E-4
6. $EAQKBU_3X$	0.79E-7	0	0	0	0	0	0	0	0
7. EAU_1	0.13E-4	0.12E-4	0.82E-5	0.82E-5	0.80E-5	0.69E-5	0.25E-5	0.39E-13	0.67E-5
8. EAU_1X	0.58E-6	0.47E-12	0.58E-12	0.58E-12	0.60E-12	0.63E-12	0.49E-13	0.11E-12	0.68E-12
Total Core Melt	0.75E-4	0.42E-4	0.31E-4	0.30E-4	0.28E-4	0.27E-4	0.27E-4	0.90E-12	0.20E-4

*See Table 3.15 for components removed from Base Case.

4. REVIEW OF OTHER EXTERNAL EVENTS

The OPRA has provided an analysis of the effects of the following external events:

- Fires (Section 9.3 of OPRA)
- Tornado (Section 9.2 of OPRA)
- External Floods (Section 9.4 of OPRA)
- Aircraft Impact (Section 9.6 of OPRA).

Compared to the analysis of the accident sequences due to internal floods and seismic events, the OPRA analysis for the above listed external events presents much less detail and information to be reviewed. Because of the nature of the analysis and because of the constraints of this review, only a scoping review was performed for fires, tornadoes, external floods, and aircraft impact; Sections 4.1 through 4.4 present the results of this scoping review.

4.1 Review of Fire Events

4.1.1 Summary of OPRA Analysis

The OPRA authors themselves recognize that "the fire analysis was carried out under resource limitations that limited the scope of the analysis activities," and thus, major assumptions had to be made in order to perform the analysis. The following remarks directly quoted from the OPRA, together with those presented in Appendix G, place the results of the OPRA into perspective:

1. "The analysis was limited to areas where the analysts believed the most damage can be anticipated. Many more areas of the plant would have to be investigated in more detail for a complete fire risk analysis. The degree to which additional analysis is warranted must be balanced by the importance to the overall study results and an understanding of the limitations associated with the state of the art in the analysis of fire event sequences.

2. The frequencies of fires were derived from the experience of all U.S. nuclear power plants. The extent to which they reflect the conditions at Oconee Unit 3 is not entirely certain. For example, it is debatable whether fires like the Browns Ferry incident should be included in the data base because modifications have been implemented as a result of that fire. Nevertheless, all fires were included in the data base.

3. Simple models were used to assess the propagation of fires in cable trays and the temperature rise in compartments due to the heat released by the fire.

4. The analysis of the fire-initiated sequences was not detailed. Such an analysis would explicitly include the timing of events, the possibility of restoring lost functions, the possibility of errors of commission, and a detailed analysis of local actions outside the control room.

5. Whenever a fire is postulated in an area where it can affect instrumentation, the question of completeness of the analysis becomes very important. It is very difficult to know what information would be presented to the operators and how they would respond. However, the impact of such events on the fire risk is judged to be included in the uncertainties assessed for the dominant sequences."

Starting with the above assumptions, the OPRA fire analysis concentrated on loss-of-coolant accidents (LOCAs) and transients that could be initiated by fires in the electrical-equipment room and in the cable-shaft area. This analysis concluded that:

1. Equipment-room fire sequences would result in a core damage frequency equal to about 1.5E-8/yr, which is an insignificant contribution to the total core damage frequency due to fires.

2. Cable-shaft fire sequences, which were analyzed by using the event tree reproduced here in Figure 4.1, result in a core damage frequency equal to 1.0E-5/yr (bin I CDF = 6.5E-6/yr and bin III CDF = 3.6E-6/yr).

4.1.2 BNL Review

Battelle Columbus Laboratories (BCL) was retained by BNL to review the methods used in the fire-risk analysis performed to identify critical locations and the frequency of fire hazards, and the modeling of fire growth and suppression with its resulting effects on initiating events and equipment loss due to fires. This review, which is presented in Appendix G of this report, concluded that "the overall plant fire risk analysis performed for the Oconee 3 nuclear power plant appears to be a reasonable first approximation based on the results of the review with exception of the limitation of fire risk areas being limited to the auxiliary building, specifically the equipment room and the cable-shaft area."

For the areas reviewed, i.e., using the Oconee event tree with probabilities/unavailabilities unchanged with the exception of the frequency of cable-shaft fire (first top event in the event tree presented in Figure 4.1), Table 4.1 (reproduced from Table 2 in Appendix G) summarizes the various factors that have been identified in the BCL review, together with an expected range of effects on the accident sequence frequencies; these factors provide the range within which a more detailed study would be expected to yield results.

The review of the event tree and accident sequences presented in Figure 4.1 was performed by BNL and the following comments are appropriate:

1. BNL is in qualitative agreement with the fire event tree (Figure 4.1).

2. The quantification of the top event HPI, i.e., failure of the operators to indicate HPI, is based on two assumptions:

   a. The actions to start the HPI function can be remotely performed from the control room.
   b. The safety injection signal is not generated automatically.

The first assumption does not seem to be correct, because it is stated in page 9-102 of OPRA that the cables for the HPIS valves 3HP-24 and 3HP-25, which must be open to provide suction from the BWST, are assumed to be located in the cable shaft area. So, if these cables are damaged by the same fire that caused the LOCA, the operators need to open those valves locally, and this was not considered. Note that if the pumps are started without suction, the pumps will be damaged in a short period of time.

The second assumption, event though it seems conservative, is not necessarily true because of the location of the cables to valves 3HP-24 and 3HP-25; i.e., if the safety injection signal automatically starts the HPI pumps but the suction valves (3HP-24 and 3HP-25) do not open, the pumps may be damaged if not stopped in time.

For the above reasons, it is the opinion of the BNL reviewers that the probability of not having the HPIS to mitigate the LOCA (i.e., probability of failure for top event HPI in Figure 4.1) may approach 1.0 if no credit is taken for operator actions to locally open valves 3HP-24 and 3H-25. Note that the OPRA does not indicate that the operators are aware of this problem. To evaluate the failure probability for the top event HPI, a much more detailed analysis would be necessary. Therefore, this review will use the probability equal to 1.0 (i.e., certainty) for the top event HPI as an upper bound, noting that this value may not necessarily be a very conservative assumption.

A summary of the core damage frequency obtained in this review is presented in Table 4.2, where it is shown that the total core damage frequency from fire sequences may lie between 6.9E-6/yr and 2.2E-4/yr. In this table, a breakdown from the OPRA results and for the three cases obtained in this review is also presented.

Duke Power Company has stated, in a comment to this review, that a sequence added in this report is theoretically possible but it was not appropriate or within the bounds of the OPRA scoping fire analysis because of the low probability combination of burned/not burned control and power cables. However, the information provided to BNL was not sufficient for elimination of such sequence. If this sequence were to be eliminated, the core damage frequency from fire events would change from between 6.9E-6/yr to 2.2E-4/yr to between 2.5E-6/yr to 8.1E-5/yr.

4.2 Review of Tornado Events

4.2.1 Summary of OPRA Analysis

The analysis by OPRA to estimate the frequency of core damage due to sequences initiated by a tornado was divided into two parts, namely, the vulnerability of the plant to damage from tornado missiles and the vulnerability to damage from tornado-wind effects.

The OPRA analysis of the plant's vulnerability to damage from tornado missiles is a scoping analysis based on extrapolation of the results of two other detailed simulation studies of tornado-missile hazards, namely, the EPRI NP-768[1] and an SAI report for the Pilgrim Station Unit 2.[2] From those two studies, the OPRA concludes in its Appendix K that the annual frequency at which plant safety is compromised (core damage results) by tornado missiles is

less than 1.0E-9. Given this low core damage frequency and given the potential for damage caused by tornado winds (discussed below), the sequences resulting from missiles were judged to be negligible.

The OPRA analysis of the tornado-wind effects on vulnerable structures was performed by using the event tree reproduced here as Figure 4.2. To determine the frequency of tornadoes which could damage plant structures the OPRA states that "an evaluation of the capacity of equipment and structures to withstand tornado-wind effects and an understanding of the core-cooling functions that must be defected for a tornado sequence to lead to core-melt, led to the choice of a tornado with wind speeds of 150 mph or more as the initiating event." This wind speed was judged to be a threshold above which two key features, the BWST and the west penetration room, become unavailable. Based on this, the data given in Appendix K of OPRA yield a frequency of 3.5 x 10^{-5}/yr for tornadoes with wind exceeding 150 mph (see Figure 4.2).

The other top events in the event-tree are self-explanatory and a detailed description of these events with the explanation of how probabilities/unavailabilities were obtained is given in Section 9.2 of the OPRA. From the event tree given in Figure 4.2 the following annual core damage frequencies for each bin were obtained:

Bin I : 2.2E-6
Bin III: 1.1E-5
Total : 1.3E-5.

4.2.2 BNL Review

This review attempted to address the two parts of the OPRA tornado analysis described in the preceding section. However, the information provided in the analysis of tornado-missiles made a meaningful review impossible. Also, the results of previous PRAs seem to indicate that the accident sequences generated by tornado missiles will not be an important contribution to the Oconee-3 core damage frequency.

In the review of the tornado-wind effects the following steps were performed:

- The frequency of initiating events was reviewed on the basis of the table presented in Appendix K of OPRA, and assuming that the threshold wind speed (150 mph) and the structures damaged by the wind are those given in the OPRA.

- Using the assumptions above, BNL reviewed the event tree. It is the reviewers' opinion that given a loss of 4-kV power (event B in Figure 4.2), seal leakage will occur (loss of makeup and loss of component cooling). Thermal barrier cooling is lost when component cooling is lost. Additionally, seal injection fails because HPI is not available (loss of 4-kV power and loss of BWST) and because the possibility of makeup from the SSF is also lost as the result of tornado damage to the west penetration room (see OPRA page 9-60, event F). Implications of these failures have been discussed in internal events treatment, where it is shown that core damage will occur in several hours. Note that loss of the BWST means that the seal LOCA cannot be mitigated

even if 4-kV power is restored before core uncovery. Therefore, sequences 3 through 6 in Figure 4.2 are substituted by the sequence T_0AB, which is a bin I sequence with a frequency equal to 1.7 x 10^{-5}/yr. The following revised core damage frequencies are then obtained:

Bin I : 1.8E-6/yr
Bin III: 5.0E-6/yr
Total : 2.3E-5/yr.

4.3 Review of External Flood

4.3.1 Summary of OPRA Analysis

The OPRA identified two potential sources of external flooding of the Oconee plant: a general flooding of the rivers and reservoirs in the area due to rainfall in excess of the probable maximum precipitation (PMP), and a random failure of the upstream Jocassee Dam.

For the analysis of the first sources, i.e., a general flooding, a mathematical model to predict the frequency of a storm given the duration of rainfall and the cummulative precipitation was developed. With this method, which is described in Section 9.4 of the OPRA, the following distribution was obtained:

Cumulative Probability	(Probable Maximum Precipitation) PMP yr^{-1} Frequency
0.05	4.9E-8
0.50	2.9E-7
0.95	8.9E-7

Since the calculated frequency of flooding of the Oconee plant due to the PMP storm is much lower than that due to a random failure of the Jocassee Dam, the OPRA concluded that precipitation-induced external flooding is a negligible contribution to core melt frequency.

For the analysis of the random failure of the Jocassee Dam, the OPRA states that:

"An analysis was performed to determine an annual frequency of failure for earth, earth-rockfill, and rockfill dams due to events other than overtopping and earthquake ground shaking, which were considered in separate analyses. Also, based on dam design information, structural failure of the spillway during discharge and failure associated with seepage along an outlet works have been eliminated as a possible failure mechanism. The following principal modes of failure were considered:

1. Piping.
2. Seepage.
3. Embankment slides.
4. Structural failure of the foundation or abutments."

From the above mechanisms of failures, data for dam failures were obtained and a model to estimate the frequency of failure of the Jocassee Dam was developed (see Section 9.4 of the OPRA). The dam-failure frequencies associated with the lower, median, mean, and upper bounds of the probability distribution estimated in the OPRA are:

Cumulative Probability	(Probable Maximum Precipitation) PMP yr^{-1} Frequency
0.05	7.9E-8
0.50	2.3E-7
0.95	5.5E-7
Mean	2.5E-5

After obtaining this frequency of failure of the Jocassee Dam, the OPRA assumes bounding values of 1.0 for the conditional probability of flooding of the Oconee site given a catastrophic failure of the dam, and for the conditional probability of core melt given flooding at the Oconee site; that is, the OPRA estimates a mean core damage frequency equal to 2.5E-5/yr due to external floodings.

4.3.2 BNL Review

Because of the nature of the analysis performed in the OPRA, the lack of information on the Jocassee Dam, and the resources allocated to this review, the contribution of the external flooding to the core damage frequency could not be reviewed. The OPRA model extracts a failure frequency for Jocassee by compiling data for similar types of dam failures, and assuming that the failure frequency depends essentially on the period during which it was constructed, with more recently constructed dams displaying a lower failure frequency. A functional form was assumed for time-dependent dam failure rate, and a Bayesian analysis was performed to obtain the parameter values entering the assumed functional form. However, if we use only the data provided in Tables 9-20 and 9-21 of the OPRA, i.e., the estimated number of dam failures and the cumulative dam years, it is possible to state that the frequency of dam failures is given by:

Period of Dam Construction	Frequency (yr^{-1})
1900 - 1975	4.7E-5
1940 - 1975	2.9E-5
1960 - 1975	2.3E-5

These results show that the model used by the OPRA is estimating a frequency of dam failures not much different from that obtained, straightforward, from previous experience.

In summary, since BNL did not review the contribution of external floodings to the core damage frequency Oconee-3, the OPRA frequency is used in this review, i.e., 2.5E-5/yr.

4.4 Review of Aircraft Impact Events

The OPRA developed a method to derive the probability distribution for aircraft-accident frequency. This method, described in Section 9.6 of the OPRA, is similar to what has been used in previous PRAs.

Using this method, the OPRA calculates the following distribution for the frequency of aircraft impact.

Confidence Level	Impact Frequency per year
0.05	4.9E-10
0.50	2.5E-9
0.95	1.3E-8

Because the calculated impact frequencies are very low, it was used directly as the frequency of core damage due to aircraft impact.

Because of the negligible contribution of aircraft impact to core damage frequency, this review did not address this topic.

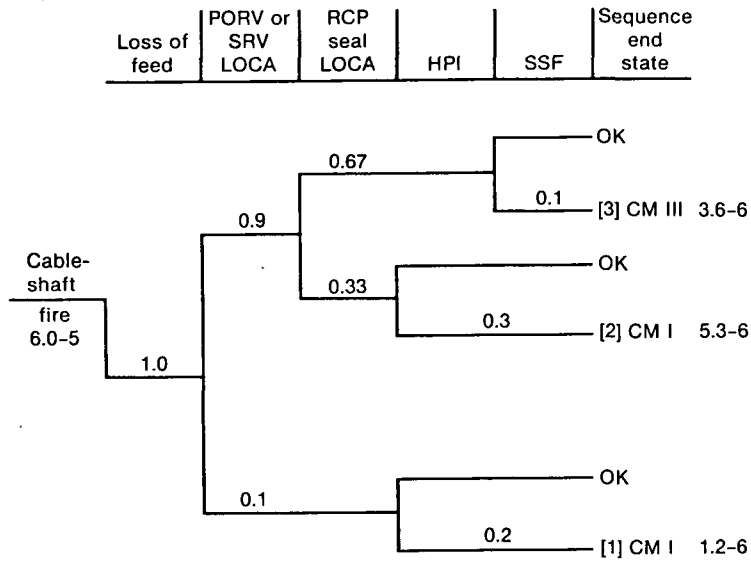

Figure 4.1 OPRA cable-shaft fire event tree.

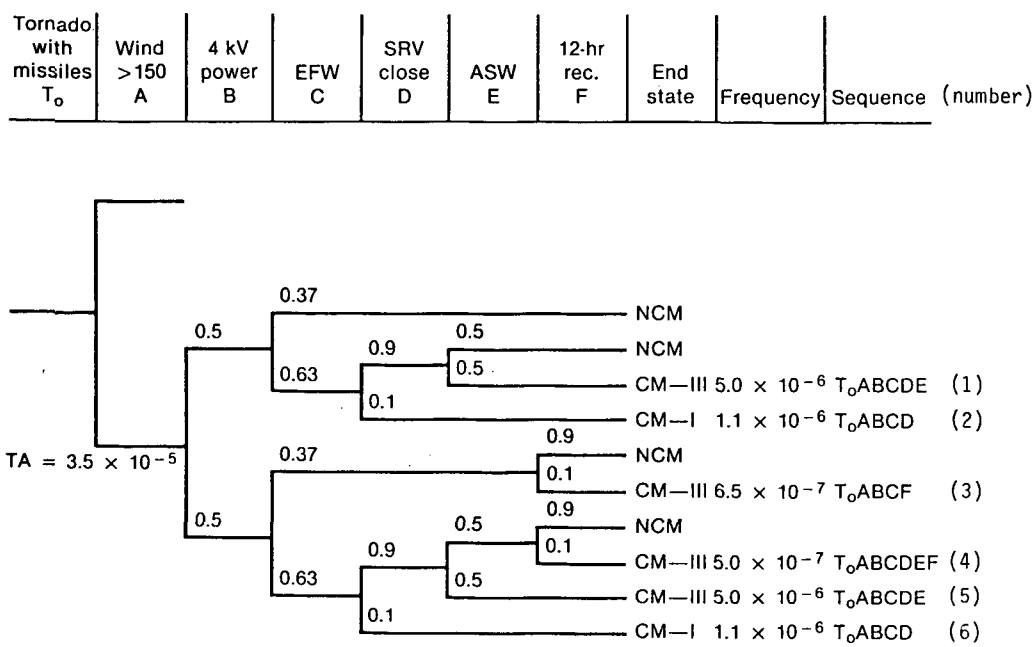

Figure 4.2 OPRA event tree for sequences initiated by a severe tornado.

Table 4.1 Summary of BCL Review

Finding	Potential Effect on Sequence
1. Frequency of fire in identified zones	x 0.5 to x 1.0
2. Additional fuel sources	x 1 to x 1.25
3. Upper-layer shielding of detectors	x 1 to x 1.6
4. Effect of smoke opacity of propagation	x 0.5 to x 1
5. Assumptions of synergism of areas and fraction of large fires	x 1 to x 4

Table 4.2 Summary of Fire Core Damage Annual Frequency

	Bin I	Bin III	Total
Case 1: OPRA	6.5E-6	3.6E-6	1.0E-5
Case 2: OPRA event tree (including probabilities) with BCL review of fire phenomenology			
(Factors given in Table 4.1):			
Lower Limit	1.6E-6	9.0E-7	2.5E-6
Upper Limit	5.2E-5	2.9E-5	8.1E-5
Case 3: Same as core 1, with BNL requantification of top event HPI in event tree of Figure 4.1 (may be an upper limit)	2.4E-5	3.6E-6	2.7E-5
Case 4: Modification of cases 2 and 3 combined:			
Lower Limit	6.0E-6	9.0E-7	6.9E-6
Upper Limit	1.9E-4	2.9E-5	2.2E-4

5. SUMMARY

The OPRA has provided a detailed analysis for flooding events from sources within plant buildings and for seismic events. A less detailed analysis was presented for fires, tornadoes, external floodings, and aircraft impact events. The core damage frequencies calculated in the OPRA for each of these external events are presented in Table 5.1.

BNL allocated time to review each of the external events analyzed in the OPRA according to the level of detail in the OPRA analysis and the information available. Most of the time in this review was dedicated to internal flooding and seismic events, where a detailed reanalysis was performed. The results are also presented in Table 5.1, and the following comments are appropriate:

1. Internal Flooding - In this review, detailed reanalysis was performed for flooding in the turbine building. The resulting core damage frequency calculated in this review was about the same as that in the OPRA (8.0E-5/yr vs 8.8E-5/yr in the OPRA). Differences did show up in the binning of the sequences and this is discussed in Section 2.

   Note that even though the OPRA addresses in some detail the flooding from other sources in the turbine building and, in a scoping study, the floods in the auxiliary building, those two contributions to core damage frequency were not included in the OPRA results.

2. Seismic - In this review, a reanalysis was performed for seismic events. The calculated core damage frequency was equal to 8.2E-5/yr as compared to 6.3E-5/yr in the OPRA. Note that this review tried to replicate the OPRA analysis, and a core damage frequency of 7.5E-5 was obtained; this result indicates a small difference due to the growth-fraction tools used. In Section 3 of this review, a limited sensitivity analysis is provided.

3. Fires - In this review, a limited assessment of the modeling of fire growth and suppression and its effects on initiating events was performed. Several areas were found where a more detailed analysis than that performed in the OPRA would change the core damage frequency; for these areas, upper and lower bound factors were used in this review. Also, in the analysis of the fire event tree this review found an area where a more detailed analysis (with much more information than BNL had access to) would change the results of the fire sequences. Using these facts, this review assessed the core damage frequency from fire events to be between 6.9E-6/yr to 2.2E-4/yr, as compared with the 1.0E-5/yr calculated in the OPRA.

4. Tornadoes - In this review, only a scoping analysis of tornado events was performed. The review of the tornado-wind accident sequences found a sequence not presented in the OPRA (see Section 4.2), and this difference is responsible for the change in core damage frequency from 1.3E-5/yr to 2.3E-5/yr.

5. External Floods - No reanalysis was done for the external floods because of the lack of information and the restricted scope of this review. The same core damage frequency as that in the OPRA is used here, i.e., 2.5E-5/yr. This core damage frequency comes exclusively from the random failure of the Jocassee Dam and the assumption that a failure of the dam will result in core damage.

6. Aircraft Impact - Because of the negligible contribution to core damage, no effort was spent in the reassessment of the core damage frequency due to aircraft impact.

Table 5.1 Summary of Annual Core Damage Frequencies for External Events

	OPRA	BNL Review
Turbine-Building Floods		
• CCW Floods	8.8E-5	8.0E-5
• Other Floods	-[a]	4.8E-6
Auxiliary-Building Floods	-[a]	1.2E-5
Seismic	6.3E-5	8.2E-5
Fires	1.0E-5	6.9E-6[b]
		2.2E-4
Tornadoes	1.3E-5	2.3E-5
External Floods	2.5E-5	2.5E-5
Aircraft Impact	Negligible	Negligible

[a]The OPRA addresses these floods but does not include them in its final results.
[b]BNL presents upper and lower bounds based on the fire phenomenology modeling (see Appendix G).

APPENDIX A

REVIEW OF OPRA FAULT TREE APPROACH TO QUANTIFICATION OF THE FLOOD-INITIATING EVENTS

This appendix addresses the fault trees constructed by OPRA to evaluate the flood initiating events and for construction of broad groups of flood-initiator categories for the subsequent analysis of the accident sequences.

BNL found the analysis to be generally correct. Most of the comments are minor or have a small effect on the results. Table A.1 summarizes the BNL initiators, their flow rates, and their frequencies. This analysis was redone by BNL because of the different grouping of flooding categories used by BNL and because the flow rates BNL has calculated included the modifications made to the CCW crossover and condensate coolers which were not explicitly given in Table 9.31 (page 9.150 of OPRA). The results of Table A.1 are compared with those of OPRA in Table 2.4 given in the main report. It is seen that BNL used finer grouping in the very large and large flood categories but the sum of their frequencies is similar to those of OPRA. Some changes are seen in the medium flood category.

Table A.2 lists specific comments on the OPRA fault trees generated during the BNL review.

Table A.1 Flood-Initiating Events Categorization, Frequencies and Flow Rates

1. Very Large Floods (Greater than 170,000 gpm)

Very large flood 1 -- VL1: > 350,000 gpm
Very large flood 2 -- VL2: 170,000 to 349,000 gpm

	DESIGNATOR	FLOW RATE (gpm)	FREQUENCY $(yr)^{-1}$
1.1 Non Isolable Floods			
1.1.1 Gross rupture of any of 18 condenser outlet valves bodies	FVL2N	175,000	1.8×10^{-4}
1.1.2 Gross rupture of any of 6 condenser outlet pipes and water impingement on the pneumatic valves	FVL1N	440,000	9.0×10^{-6}
1.1.3 Outlet valve fails, removed and improperly reinstalled ($0.1 \times 3 \times 10^{-3} * 1.7 \times 10^{-2}$)	FVL2N	175,000	5.1×10^{-6}
1.1.4 Outlet water boxes removed and improperly reinstalled and impingement on pneumatic valve (10%)	FVL1N	440,000	4.0×10^{-7}
TOTAL:	FVL1N	≈ 440,000	1.0×10^{-5}
	FVL2N	≈ 175,000	1.8×10^{-4}
1.2 Isolable Flood Break on Inlet Side of Condenser			
1.2.1 Gross rupture of any 18 condenser inlet pipes	FVL1II	465,000	1.7×10^{-4}
1.2.2 Water boxes (inlet) removed for retubing and improperly reinstalled (10%)	FVL1II	465,000	7.5×10^{-6} (a)
1.2.3 Gross rupture of any condenser inlet valve body	FVL2II	180,000	1.1×10^{-5}
1.2.4 Inlet valve fails, removed and improperly reinstalled (10%)	FVL2II	180,000	6.9×10^{-6}
1.2.5 Inlet valve fails, removed and intake valve spuriously open	FVL2II	180,000	2.1×10^{-6}
TOTAL:	FVL1II	465,000	1.8×10^{-4}
	FVL2II	180,000	2.0×10^{-5}
1.3 Isolable Flood, Break on Outlet Side of Condenser			
1.3.1 Gross rupture of any of 18 condenser outlet pipes	FVL1IO	440,000	1.8×10^{-4}
1.3.2 Outlet water boxes removed for retubing and improperly reinstalled (10%)	FVL1IO	440,000	8.0×10^{-6}
TOTAL:	FVL1IO	440,000	1.9×10^{-4}

2. Large Floods (Greater than 60,000 and less than 169,000 gpm)

Large Flood 1 L1: > 120,000, < 169,000 gpm
Large Flood 2 L2: > 60,000, < 119,000 gpm

2.1 Non Isolable Floods			
2.1.1 Outlet water boxes removed for retubing and improperly reinstalled and impingement on outlet pneumatic valve (30%)	FL1N	132,000	1.1×10^{-5}

Table A.1 Continued

		DESIGNATOR	FLOW RATE (gpm)	FREQUENCY $(yr)^{-1}$
2.1.2	Gross rupture of any outlet expansion joint and impingement on pneumatic valve (100%)	FL2N	56,000[d]	2.3×10^{-4}
2.1.3	Large rupture of any outlet pipe and impingement (30%)	FL1N	132,000	2.7×10^{-5}
2.1.4	Outlet isolation valve fails while expansion joint is out for replacement	FL2N	56,000	3.4×10^{-5}
2.1.5	Other cases of CCW open for maintenance and outlet valve fails to open	FL2N	90,000	1.7×10^{-5}
2.1.6	RCW outlet piping rupture (10%)	FL2N	80-115,000	5.4×10^{-6}
2.1.7	RCW outlet valve rupture (10%)	"	77,000	2.5×10^{-6}
2.1.8	Manways removed and 2 out of 54 improperly reinstalled, and impingement on pneumatic valve (10%)	"	70,000	3.0×10^{-5}
2.1.9	Two manways out of six (on floor-nonisolable) improperly reinstalled (once in 10 years)[b]	"	100,000	$< 10^{-6}$
2.1.10	Gross rupture of condensate coolers piping (10%)	"	90,000	3.6×10^{-5}
2.1.11	Condensate coolers in maintenance and improperly reinstalled -- outlet side (10%)	"	81,000[b]	6.0×10^{-5}
	TOTAL:	FL1N	130,000	3.8×10^{-5}
		FL2N	~60,000	4.1×10^{-4}
2.2	Isolable Large Floods, Break on Inlet Side			
2.2.1	Large rupture of any of 18 Condenser inlet pipes (30%)	FL1II	140,000[b]	5.0×10^{-4}
2.2.2	Gross rupture of crossover pipes (all assumed to be 42 in.) (10%)	FL1II	140,000[b]	7.0×10^{-6}
2.2.3	Gross rupture of any of 4 CCW crossover valves (10%)	FL2II	81,000	2.5×10^{-6}
2.2.4	Two or more condenser inlet manways improperly reinstalled (10%)	FL2II	70,000	6.0×10^{-4}[a]
2.2.5	Gross rupture of any inlet expansion joints (100%)	FL2II	76,000[d]	4.5×10^{-3}
2.2.6	Removal of inlet water boxes and improper reinstallation (30%)	FL1II	140,000	2.3×10^{-5}[a]
2.2.7	Removal of inlet expansion joints for replacement and intake valve opens spuriously	FL2II	76,000	2.3×10^{-7}
2.2.8	LPSW Lines			
	- Gross rupture of LPSW inlet lines (10%)	FL2II	103,000	3.8×10^{-5}
	- Gross rupture of LPSW pump casing	FL2II	103,000	10^{-4}
	- Gross rupture of any of 7 inlet valves (10%)	FL2II	68,000	4.3×10^{-5}
	- LPSW inlet valves fail, removed and improperly reinstalled (10%)	FL2II	68,000	1.5×10^{-6}
	LPSW subtotal			1.8×10^{-4}

Table A.1 Continued

	DESIGNATOR	FLOW RATE (gpm)	FREQUENCY $(yr)^{-1}$
2.2.9 Condensate Coolers Inlet			
- Gross rupture of condensate coolers inlet piping (10%)	FL2II	90,000	2.0×10^{-5}
- Maintenance on coolers and improper reinstallation (10%)	FL2II	90,000	6.0×10^{-5}
TOTAL:	FL1II		5.3×10^{-4}
	FL2II		5.4×10^{-3}
2.3 Isolable Large Floods, Break on Outlet Side			
2.3.1 Large rupture of any of 18 condenser outlet pipes (30%)	FL1IO	130,000	5.3×10^{-4}
2.3.2 Two or more manways improperly reinstalled (10%)	FL2IO	66,000	6.0×10^{-4}
2.3.3 Water boxes on outlet side improperly reinstalled (30%)	FL1IO	130,000	2.3×10^{-5}
2.3.4 Gross rupture of any outlet expansion joint (100%)	FL2IO	56,000[d]	4.5×10^{-3}
TOTAL:	FL1IO	130,000	5.5×10^{-4}
	FL2IO	66,000	5.1×10^{-3}
3. Medium Flood (Greater than 12,000, and less than 59,000			
3.1 Nonisolable Medium Floods			
3.1.1 Large rupture of any 18 outlet condenser valve bodies (30%)	FMN	52,000[b]	5.4×10^{-4}[f]
3.1.2 Medium rupture of any 18 outlet condenser valve bodies (60%)	FMN	15,000[b]	1.1×10^{-3}
3.1.3 Medium rupture of any 18 outlet pipes with impingement on pneumatic valve (60%)	FMN	40,000	5.5×10^{-5}
3.1.4 Outlet water boxes removed for maintenance improperly reinstalled and impingement (60%)	FMN	40,000	2.5×10^{-6}
3.1.5 Gross flow from improperly reinstalled manways (one) and impingement (10%)	FMN	33,000	3.0×10^{-4}
3.1.6 Outlet valves failed, removed and improperly reinstalled (large error = 30%)	FMN	40,000	1.7×10^{-5}[f]
(medium error = 60%)	FMN	12,000	3.4×10^{-5}
3.1.7 One of six unisolable manways (on basement floor) improperly reinstalled (one in ten years) (10%)	FMN	50,000	6×10^{-5}[a]
3.1.8 Same as above (30%)	FMN	15,000	1.8×10^{-4}[a]
3.1.9 Condensate Coolers:			
- Gross rupture of condensate coolers, 12 outlet valves (10%)	FMN	55,000	7.6×10^{-6}[f]
- Large rupture of the above (30%)	FMN	16,000	2.3×10^{-5}

Table A.1 Continued

	DESIGNATOR	FLOW RATE (gpm)	FREQUENCY $(yr)^{-1}$
- Any outlet valve on condensate coolers failed removed and improperly reinstalled (10%)	FMN	55,000	$7x10^{-6}$
- The above (30%)	FMN	16,000	$2.1x10^{-5}$
- Condensate coolers in maintenance and improperly reinstalled (30%)--outlet side	FMN	27,000	$1.8x10^{-4}$
- Medium rupture of condensate coolers outlet piping	FMN	27,000	$1.1x10^{-4}$
Subtotal condenser coolers			$3.5x10^{-4}$
3.1.10 Outlet isolation valve fails while inlet expansion joint replaced	FMN	50,000	$3.6x10^{-7}$
3.1.11 Medium nonisolable flood from RCW outlet	FMN	30,000(b)	$6.0x10^{-5}$
3.1.12 LPSW Discharge			
- Gross rupture of LPSW outlet piping (10%)	FMN	50,000	$1.1x10^{-5}$
- Large rupture of LPSW outlet piping (30%)	FMN	15,000(b)	$3.3x10^{-5}$
- Gross rupture of LPSW 4 manual valves (10%)	FMN	20,000	$2.5x10^{-6}$
TOTAL:	FMN		$2.7x10^{-3}$
3.2 Isolable Medium Flood Inlet Side Break			
3.2.1 Medium rupture of condenser inlet piping (10%)	FMII	40,000	$1.0x10^{-3}$
3.2.2 Large rupture of an inlet valve body (30%)	FMII	54,000	$3.4x10^{-5}$
3.2.3 Medium rupture of an inlet valve body (60%)	FMII	16,000	$6.8x10^{-5}$
3.2.4 Inlet valve removed, and large reinstallation error (30%)	FMII	54,000	$1.6x10^{-5}$
3.2.5 The above (60%)	FMII	16,000	$3.2x10^{-5}$
CCW piping subtotal			$1.5x10^{-4}$
3.2.6 Gross rupture of RCW inlet piping (10%)	FMII	34,000	$1.6x10^{-5}$
3.2.7 Gross rupture of RCW valve inlet (10%)	FMII	14,000	$1.3x10^{-6}$
3.2.8 Unwatering system gross rupture of pipe (10%)	FMII	20,000	$1.5x10^{-5}$
3.2.9 Unwatering system gross rupture of valve (10%)	FMII	14,000	$1.3x10^{-6}$
Unwatering and RCW subtotal			$3.4x10^{-5}$
3.2.10 Condenser Coolers			
- Removal of valve CCW-75 for maintenance and improper reinstallation (10%)	FMII	55,000	$1.1x10^{-6}$
- Coolers in maintenance and improperly reinstalled (30%)	FMII	27,000	$1.8x10^{-4}$
- Large flood from CCW-75 (30%)	FMII	16,000	$3.3x10^{-6}$
- Any of 6 valves in inlet of condensate coolers is removed and improperly reinstalled (10%)	FMII	55,000	$\sim 10^{-6}$
- Gross rupture of any of the 9 inlet valves (10%)	FMII	55,000	$5.7x10^{-6}$

Table A.1 Continued

	DESIGNATOR	FLOW RATE (gpm)	FREQUENCY $(yr)^{-1}$
- Large rupture of any of the 9 inlet valves (30%)	FMII	16,000	1.7×10^{-5}
- Large rupture of condensate coolers inlet piping (30%)	FMII	27,000	5.9×10^{-5}
- 3 expansion joints of condensate coolers rupture (10%)	FMII	44,000	7.5×10^{-4} (c)
Condensers Coolers subtotal			1.0×10^{-3}
3.2.11 Maintenance in CCW Piping			
- Water boxes improperly reinstalled (60%)	FMII	40,000	5.0×10^{-5}
- Manways open for maintenance and improperly reinstalled (one)	FMII	30,000	6.0×10^{-3} (a)
- Inlet expansion joint out for replacement and outlet isolation fails	FMII	60,000	3.4×10^{-5}
Subtotal Maintenance of CCW			6.1×10^{-3}
3.2.12 CCW Crossover			
- Medium flood from CCW crossover piping rupture (60%)	FMII	12,000 (b)	4.2×10^{-5}
- Large flood from CCW crossover piping rupture (30%)	FMII	40,000	2.1×10^{-5}
- Large flood of any of 4 values of crossover (30%)	FMII	24,000	7.6×10^{-6}
3.2.13 LPSW/HPSW Systems			
- Gross rupture of HPSW inlet piping (10%)	FMII	36,000	3.9×10^{-6}
- HPSW pump casing rupture	FMII	36,000	5.0×10^{-5}
- Gross rupture of a suction valve	FMII	36,000	1.3×10^{-6}
- Large rupture of any of 7 inlet LPSW valves (30%)	FMII	20,000	1.3×10^{-4}
- Large flood due to pump casing rupture (30%)	FMII	25,000	3.0×10^{-4}
- Large rupture of any LPSW inlet piping (30%)	FMII	25,000	1.1×10^{-4}
- LPSW valve maintenance and improper reinstallation (10%)	FMII	20,000	4.0×10^{-6}
Subtotal HPSW/LPSW and Crossover			6.7×10^{-4}
TOTAL:	FMII		8.0×10^{-3}
3.3 Isolable Medium Flood Outlet Side Break			
3.3.1 Medium rupture of any 18 condenser outlet lines (60%)	FMIO	40,000	1.1×10^{-3}
3.3.2 Water box removed and improperly reinstalled (60%)	FMIO	40,000	5.0×10^{-5}
3.3.3 Condenser opened for maintenance and improperly reinstalled. One manway out of total of 54 (10%)	FMIO	33,000	6.0×10^{-3}
3.3.4 Any of the 18 outlet isolation valves tranferred closed and ruptures expansion joint by water hammer (10%)	FMIO	50,000	4.2×10^{-3} (e)
3.3.5 CCW emergency discharge pipe rupture (10%)	FMIO	20,000	1.9×10^{-5}
TOTAL FMIO:			1.1×10^{-2}

Table A.1 Continued

Notes

[a]BNL value is higher than OPRA because unrecovered improper installation error probabilities on inlet and outlet sides are assumed to be the same.
[b]This initiator added in the BNL reevaluation.
[c]OPRA refers to this initiator but it did not appear in the fault tree developed for initiators grouping.
[d]Flow rate taken from OPRA because it was specifically calculated by a detailed computer program. Similar to OPRA, it is assumed to be included in the large flood category even though flow rate is slightly less than the 60,000 gpm boun-dary.
[e]This item was included in the inlet rather than the outlet side of the condenser in OPRA.
[f]This initiator transferred in the BNL review. It appears in a higher flood category in OPRA.

Table A.2 BNL Comments on OPRA Flood-Initiating Events Fault Trees (Figures 9.63 to 9.70)

CW2OAVOT: Fig. 9-64	Internal leak or rupture of a valve was assumed to be similar to the external leak or rupture failure probability with retubing for 1000 hr. This resulted in 10^{-5} for internal rupture with little or no impact.
CW2OSWT: Fig. 9-64	340 hr used instead of 1000 hr for water box retubing, which was assumed in all other cases. The change has no impact.
CW1ORVT: Fig. 9-64	This event is calculated as 1.2×10^{-6}. It should be 1.2×10^{-5}. This has no effect and apparently is just a typo (see Figure 9.62, event TVL3).
CW75XXX: Fig. 9-65	All events related to valve rupture or improper assembly in the condensate coolers were calculated to have flow rate of 55,000 gpm and therefore were included only in the medium flood category (FMII).
CWIWBOXLH Fig. 9-65	Water box fails to be properly installed on inlet side--was assumed to be the same as in the case for the outlet side, i.e., $5 \times 10^{-3} \times 0.1 \times 0.3 = 9 \times 10^{-4}$, rather than 9×10^{-5}. This has no effect.
CWMWAYILH: Fig. 9-65	Failure of inlet side manways to be properly installed was assumed equal to the outlet side, i.e., 3×10^{-4}. This has a small impact.
CWOWBOXM: Fig. 9-66	Typo--should be 2.5×10^{-2}.
CWMWAYOLH: Fig. 9-67	Two or more misplaced manways were assumed to have lower probability than one misplaced manway in the BNL review. Frequency reduced.
CWCONDM: Fig. 9-67	This case is a medium flood and was transferred to the FMN tree.
CW68LVVF: Fig. 9-67	Should be 2.5×10^{-6}. A typo.
CW87LVVF: Fig. 9-67	This case and other condensate coolers valve failure have a flow rate that corresponds to a medium flood. Transferred to FMN in BNL review. Small effect.

Table A.2 Continued

CW86VVMLH: CWCCOHXM: Fig. 9-67	This event appears in the case of FMN (Figure 9.70) for the case of large misinstallation error (30%). A case of gross misinstallation error (10%) was added to FLN by BNL, to be consistent with the methodology used in all other similar cases. This adds $2(yr^{-1}) \times 3 \times 10^{-5} = 6 \times 10^{-5}$ which has a small effect.
CW20AVCT: Fig. 9.68	This event, of an "outlet valve transfers closed and water hammer causes outlet expansion joint to rupture," is put in OPRA to FMII. BNL considered this to be part of FMIO, because break is on outlet side.
CW20EJM: TVL3 Fig. 9-68	The "and gate" of CW20EJM and TVL3 is not appropriate. TL61 should be used instead of TVL3, because when expansion joint is out for replacement, the inlet manual valve (CW14) is closed, and if the intake MOV inadvertently opens, the closed inlet manual isolation valve will prevent flooding. This was assumed by BNL and this event was removed from consideration.
Fig. 9-68:	An event "any of 3 rubber expansion joints in the inlet of the condensate coolers ruptured" was added to FMII (flow rate calculated in OPRA to be 25,000 gpm). This has a frequency of 7.5×10^{-4} and is missing in OPRA Figure 9-68. It has some effect.
Fig. 9-69:	Outlet expansion joints fail due to water hammer following a pneumatic outlet valve transferring closed. This was added to FMIO. In OPRA it is included in FMII.
CWRCWOMPIF: Fig. 9-70	Medium rupture of discharge piping. Apparently 24- and 16-in. pipe contributions are not accounted for. Also gross rupture of the RCW 36-in. pipe is not included.
TVL14:	(TVU4 should be TVL14.) It should be a factor of about 30 smaller because = 12 hr (not 340 hr as assumed in calculating the 2.6×10^{-6} value). BNL also included internal rupture of CW20AVOT. Overall, no effect.

APPENDIX B

TURBINE BUILDING FLOODING: QUANTIFICATION OF THE SEQUENCES, CORE DAMAGE BINS, AND CONTAINMENT-SAFEGUARD STATES

This appendix summarizes the detailed results of the BNL review of the OPRA accident sequence quantification. The approach and data used to derive these results are discused in the main report. Figure 2.2 in the main report shows the eight core damage sequences considered. This appendix is arranged to show the results on a sequence-by-sequence basis according to Figure 2.2. Thus, in the BNL study, the same sequence is sometimes contributing to more than one bin (early and late bins) according to the time of the failure. In OPRA, the heading of a group of core damage sequences sometimes does not fully correspond to the sequences listed (e.g., bin II FQ_VUYX of the OPRA includes cases in which LPSW failed and is therefore not correctly covered by Y, or the bin IV FQ_SQ_VBUX of the OPRA includes cases in which B did not fail, i.e., $\overline{B}$).

For each sequence, the specific core damage accident sequences are given in an order of appearance similar to that in Appendix D.5.4 of the OPRA (page D-46). Thus, the numerals in square brackets refer in most cases to a corresponding core damage accident sequence in App. D.5.4. When [1a], [1b] is given, it is because some additional variants of sequences appear in the BNL review. Otherwise, some additional sequences are given at the end of a list with numbers higher than the last one appearing in App. D.5.4.

In most cases the same names are used by BNL in its list of the sequences. The names of events that do not appear in OPRA sequences can be found in Table 9-40 of the OPRA. Events that do not appear in that table but are derived in OPRA in Table 9-41, and appear in many sequences of the BNL review, are ASWLTF, CM12, SFMPPSH, REHSTK and LPSWPPSH.

The "ASWLTF" is the result of the quantification of the event tree in Figure 9-93 of OPRA, shown in Figure 2.3 of this report. This figure, with the values given here in Table 2.7, can be used for its quantification. The ASWLTF is the conditional probability of losing ASW long-term suction given any flood initiator.

The CM12 is the conditional probability that an early core damage would occur in one of the other units while it did not occur in unit 3. The quantification of this value in BNL review is based on BNL judgment on the sequences given in bins I and III, which do not cause a core damage in all three units. It is about two-thirds of the sum of the conditional probabilities in bins I and III for floods that can reach critical level 3 and one-half of that sum for all other initiators. A large contribution to CM12 comes from the case in which a stuck-open relief-valve sequence has occurred in unit 1 (or 2) and did not occur in unit 3.

The SFMPPSH is explained in OPRA, page 9-272, and used in the same way in the BNL review. This event corresponds to failure to replenish water to the spent-fuel pool to provide long-term suction to the SSF-makeup system.

The REHSTK is an event introduced in OPRA sequences which does not appear in Table 9.40. It stands for operator failure to replenish the elevated storage tank of the HPSW system after it is depleted.

The above two operator actions are quantified in OPRA at 0.01. On the basis of this and BNL judgment, the third case of operator action of this type--establishing long-term suction to the ASW pumps--was also quantified by BNL at 0.01 (OPRA uses 5×10^{-3} for this in its quantification in Figure 9.93). This change is in part responsible for differences in the values of the BNL ASWLTF and the corresponding SFAPPS used in OPRA.

The LPSWPPSH corresponds to SWPPS in OPRA, for which no specific value is given. It appears in the BNL review (without SFAPPS) in one sequence only. It stands for assuring suction to the LPSW.

Very few changes were made to the data given in Table 9.40. Two numerical errors were corrected (CCWAVC should be 0.049 and HSHPIF should be 0.018). CCWAV1C of OPRA was divided into its two components in the BNL review (CC2OAVC + CWSRRVN) because the first is for a specific valve and the second was assumed to be a common cause for failure of all six valves. Also BNL calculated a slightly higher unavailability of HPR. Finally, the operator action RC4MVH was made time dependent. All other data were consistent with the generic OPRA data which were reviewed separately.

The fraction of LPSW system floods for large and medium floods given by L21F, L311F, etc. was calculated by BNL from its results given in Table A.1.

Sequence No. 1 $F_n\overline{Q}_S\overline{Q}_V\overline{BX}_{11}$, Bin IV, Frequency = 1.8×10^{-5} yr^{-1}
(OPRA frequency = 1.9×10^{-5} yr^{-1})

A. Background

These core damage sequences are characterized by a flood initiator that inundates the HPI in addition to the EFW and LPSW, requiring reliance on the SSF. The SSF eventually fails in the long term because of failure to maintain a suction supply for the ASW pump (ASWLTF) or for the SSF makeup pump (CM12 + SFMPPSH).

Core damage sequences [1a], [2a], and [3a] correspond to the sequences given in OPRA, page D-52. The other sequences are additional variations considered by BNL. Note that this sequence is ascribed to bin III in OPRA. It should be in bin IV (and the OPRA results are therefore conservative).

B. Core Damage Sequences

[1a] 1.4×10^{-5} FVL2N (1.8×10^{-4}) * [CM12 (0.07) + SFMPPSH (0.01)]
1.0×10^{-6} FVL1N (1.0×10^{-5}) * [CM12 (0.09) + SFMPPSH (0.01)]

[1b] 1.4×10^{-6} FL1N (3.8×10^{-5}) * [CM12 (0.027) + SFMPPSH (0.01)]

[2a] 5.0×10^{-7} FVL2N (1.8×10^{-4}) * [SSFMUPPR (1.4×10^{-3})
+ SSFASWPPR (1.4×10^{-3})]
2.8×10^{-8} FVL1N (1.0×10^{-5}) * [SSFMVPPR (1.4×10^{-3})
+ SSFASWPPR (1.4×10^{-3})]
1.1×10^{-7} FL1N (3.8×10^{-5}) * [SSFMVPPR (1.4×10^{-3})
+ SSFASWPPR (1.4×10^{-3})]

[2b] 4.3×10^{-8} FL1IO(5.5×10^{-4}) * [CWSRRVN(0.028)]
* [SSFMVPPR (1.4×10^{-3})
+ SSFASWPPR (1.4×10^{-3})]

[3a] 3.4×10^{-7} FVL1IO (1.9×10^{-4}) * [CCWMVC (0.036) + CWSRRVN (0.028)
+ CC2OAVC (0.0035)]
* [CM12 (0.008) + SFMPPSH (0.01)]
3.4×10^{-7} FVL1II (1.8×10^{-4}) * [CCWMVC (0.036) + CWSRRVN (0.028)
+ CCWAVC (0.021)]
• [CM12 (0.008) + SFMPPSH (0.01)]
1.8×10^{-8} FVL2II (1.8×10^{-5}) • [CCWMVC (0.036) + CWSRRVN (0.028)]
• [CM12 (0.006) + SFMPPSH (0.01)]
1.7×10^{-7} FL1IO (5.5×10^{-4}) • [CWSRRVN (0.028)]
• [CM12 (0.001) + SFMPPSH (0.01)]

[3b] 3.7×10^{-8} FL2IO (5.1×10^{-3}) • [CWSRRVN (0.028) + CC2OAVC (0.0035)]
• [HSHPIF (1.8×10^{-2})
+ SWHPSWF (4.8×10^{-3})]
• [SFMPPSH (0.01)]

1.2×10^{-7} FL2II (5.4×10^{-3}) * [CCWMVC (0.036) + CCWAVC (0.021)
+ CWSRRVN (0.028]
* [HSHPIF (1.8×10^{-2})
+ SWHPSWF (4.8×10^{-3})]
* [SFMPPSH (0.01) + CM12 (0.001)]

1.4×10^{-7} FL2N (4.1×10^{-4}) * [HSHPIF (1.8×10^{-2})
+ SWHPSWF (4.8×10^{-3})]
* [CM12 (0.005) + SFMPPSH (0.01)]

[4a] 7.0×10^{-8} FMII (8.0×10^{-3}) * [M11F (0.034) + {M321F (0.042)
+ CCHXFPF (1.8×10^{-3})} * RESW12 (0.0)]
* [HSHPIF (1.8×10^{-2})
+ SWHPSWF (4.8×10^{-3})] * [SFMPPSH (0.01)]

2.2×10^{-8} FMIO (1.1×10^{-2}) * [HPIF (2×10^{-4})] * [SFMPPSH (0.01)]

C. Containment Safeguard States

Failure of RBCS and RBSS, in cases: [1], [2], [3a]
Failure of RBCS only, in cases: [3b], [4].

D. Discussion

The OPRA sequence [3] (OPRA, page D-52) has a higher frequency because a high value is derived for CM12. A smaller CM12 value was derived by BNL in Table 2.7 for the same initiator (FVLI).

In the BNL review, additional core damage sequence contributors compensate for the above reduction so that the total frequency in both cases is similar.

The main difference for this sequence is that BNL considers it to be in bin IV, i.e., late core damage.

Sequence No. 1A $F_n\overline{Q}_S\overline{Q}_V B Y \overline{X}$, Bin IV, Frequency = 4.6×10^{-6} yr^{-1}
(OPRA frequency = 1.0×10^{-5} yr^{-1})

A. Background

The core damage accident sequences below are the BNL review sequences which correspond to the OPRA case of Bin IV $F\overline{Q}_S\overline{Q}_V B\overline{U}X$ in Appendix D, page D-54. Even though the OPRA refers to B, all the sequences listed are in fact cases in which the B function is a success, i.e., SSF is available for the short term, preventing the loss of RCS heat removal via the steam generators. Therefore, they are considered by BNL as part of sequence No. 1 (see Figure 2.2). In all these sequences the LPSW is lost because the flood exceeds critical level 2 or fails LPSW; as a consequence, the RBCS is lost and the RBSS would be actuated to remove heat from the containment, depleting the BWST. Because there is no loss of RCS inventory, the ASW will be able to remove decay heat while HPI will provide makeup. When the lake is lowered for flood isolation or when the ASW pump fails to run (both assumed by BNL to occur between 12 and 72 hr), the unit would be put in the feed-and-bleed mode, the remainder of the BWST will soon be depleted, and HPR will fail in a few hours if cooling by LPSW or ASW is not recovered. OPRA does not consider a recovery in these sequences. BNL believes that time to fail the HPR will be greater in an accident sequence starting at ~15 hr, compared with the sequences in which HPR is needed at 2 hr. Therefore, a recovery factor of 0.5 was used in BNL requantification of these core damage sequences.

OPRA sequences [1], [2], [3], [4], [7], [8] on pages D-54 and D-55 correspond to the following sequences.

B. Core Damage Sequences

[1] 2.5×10^{-6} FL2N (4.1×10^{-4}) * [ASWLTF (0.011)
+ SSFASWPPR (1.4×10^{-3})] * 0.5

[2a] 9.4×10^{-7} FL2II (5.4×10^{-3}) * [CCWMVC (0.036) + CCWAVC (0.021)
+ CWSRRVN (0.028)] * [ASWLTF (0.0027)
+ SSFASWPPR (1.4×10^{-3})] * 0.5

[2b] 8.3×10^{-8} FL1II (5.3×10^{-4}) * [CCWMVC (0.036) + CWSRRVN (0.028)]
* [ASWLTF (3.5×10^{-3})
+ SSFASWPPR (1.4×10^{-3})] * 0.5

[3] 1.2×10^{-7} FL2IO (5.1×10^{-3}) * [CWSRRVN (0.028)
+ CW2OAVC (3.5×10^{-3})]
* SSFASWPPR (1.4×10^{-3}) * 0.5

[4] 1.6×10^{-7} FL2II (5.4×10^{-3}) * [L21F (0.013) + {L311F (0.005)
+ CCHXFPF (1.8×10^{-3})}
* RESW12 (0.1)] * [ASWLTF (2.7×10^{-3})
* SSFASWPPR (1.4×10^{-3})] * 0.5

[5], [6] See sequence No. 1B.

[7] 1.3×10^{-7} FMN (2.7×10^{-3}) * [{M361F (0.043) + CCHXFPF (1.8×10^{-3})}
* RESW12 (0.1) + 0.006] * [ASWLTF (0.008)
+ SSFPSWPPR (1.4×10^{-3})] * 0.5

[8] 6.1×10^{-7} FMII (8.0×10^{-3}) * [M11F (0.034) + {M321F (0.042)
+ CCHXFPF (1.8×10^{-3})} * RESW12 (0.1)]
* [ASWLTF (2.6×10^{-3})
+ SSFASWPPR (1.4×10^{-3})] * 0.5

C. Containment Safeguard States

Failure of RBCS in all the above cases.

D. Discussion

The heading of B sequence in OPRA is inappropriate. BNL considers this sequence to be part of sequence No. 1 of Figure 2.2. In general, the results are similar, but BNL has made two changes that compensated each other: 1) consideration of operator error in the recovery of long-term ASW suction and 2) consideration of some recovery of SSF, feedwater, or BWST because longer grace times are available.

Note that BNL assumes recovery of LPSW in unit 2 also for the case in which condensate coolers break occurred on their outlet side (see FMN * M361F sequence [7]).

The reduction by a factor of 2 in the BNL review results is because the frequency of FLN is lower in the BNL reevaluation, and because in sequences [2] and [3] SFAPPSLN for FLN is used in OPRA, rather than a value about one third smaller, which results from using OPRA, Table 9.41 and Figure 9.93, for FLII.

Sequence No. 1B $F_n\overline{Q}_S\overline{Q}_V$BYX, Bin IV, Frequency = 1.2×10^{-5} yr^{-1}
(OPRA frequency = 7×10^{-6} yr^{-1})

A. Background

These core damage sequences are the same as in sequence 1A, but LPSW is not lost because the flood level does not reach critical level 2 and does not fail the LPSW system. The SSF is assumed available and so is HPI makeup. If the lake is lowered to isolate the flood and ASW and LPSW, suction may be lost, or if the ASW pump fails to run, the operator will have to establish feed and bleed. When it depletes the BWST, suction to LPSW and ASW may not be recovered either because of operator error (FCC2 or FCI) or because of core damage in another unit (CM12). There is a longer grace time in this case because the feed-and-bleed mode is required in the long term when decay heat is a fraction of 1%. A recovery of 0.5 is applied by BNL for this reason. The sequences correspond to [5] and [6] on page D-55 of the OPRA.

B. Core Damage Sequences

[5a] 2.0×10^{-8} FL1II (5.3×10^{-4}) * [CCWAVC (0.021)]
* [ASWLTF (3.5×10^{-3})] * 0.5

[6a] 1.1×10^{-5} FMN (2.7×10^{-3}) * ASWLTF (0.008) * 0.5

Additional Sequences

[6b] 8.8×10^{-7} FMII (8.0×10^{-3}) * [CCWMVC (0.036) + CCWAVC (0.021)
+ CWSRRVN (0.028)]
* [ASWLTF (2.6×10^{-3})] * 0.5

C. Containment Safeguard States

Failure of the RBCS.

D. Discussion

The above core damage sequences are additional cases of sequence 1, in which both the LPSW and ASW are available in the short term. They fail only after more than 10 hr. as the result of actions taken to lower the lake for the isolation of the flood.

The results for sequence [6] in the BNL reevaluation are higher than those of the OPRA. BNL calculated some contribution for the FMII flood with isolation, but in which isolation malfunctions have occurred. A case of medium flood with isolation failure is considered by BNL to be similar to a non-isolable flood apart from the possibilities to locate and isolate this flood at a later time, a possibility that is taken into account in the ASWLTF.

The difference in sequence [6a], which corresponds to sequence [6] in the OPRA, is due to (1) a higher frequency of FMN calculated by BNL as shown in Appendix A and (2) a higher value used for failure to provide ASW suction after lowering the lake (0.01 in BNL instead of 0.005 in OPRA).

Sequence No. 2 $F_n\overline{Q}_S\overline{Q}_V B\overline{U}_3 YX$, Bin IV, Frequency = 1.0×10^{-7}
(OPRA frequency: no sequence in OPRA)

A. Background

This sequence is referenced on pages D-54 and D-55 of the OPRA. However, as discussed before (sequences 1A and 1B), the B is not included in the core damage sequences shown in the OPRA under this heading. The following sequences are the results of the sequence in the event tree shown in Figure 2.2.

These sequences are characterized by a medium flood which does not affect the LPSW. EFW and ASW are lost in the first 30 minutes. Feed and bleed is initiated and the BWST suffices for 12 hr because the RBCS is available. After 12 hr. HPR is initiated if ASW was not recovered in the meantime. Lowering the lake for the purpose of isolating the flood can cause loss of LPSW suction which is needed for successful HPR.

The difference between this sequence and sequence 1B is that here ASW failed at the beginning of the accident and was not recovered, whereas in sequence 1B the ASW cooling is successful until the lake is lowered and interrupts the backflow. Before lowering the lake, a CCW flood to at least one unit's LPSW must be maintained or else ASW must be recovered. The sequences that follow correspond to [5] and [6] of sequence 1B described before, but with B rather than $\overline{B}$.

B. Core Damage Sequences

[5] (None significant)

[6] 9.2×10^{-8} FMN (2.7×10^{-3}) * [SSF30H (0.03) * NORECV (0.03)
+ SSFASWF (2.5×10^{-3})]
* [LPSWPPSH (0.01)]

C. Containment Safeguard State

Failure of RBCS.

D. Discussion

Contribution from sequence No. 2 of Figure 2.2 is very small and practically covered by sequence [6] of 1B. Note that if the lake is lowered before recovery of ASW or without improvising any flow of water from the lake to LPSW suction, a core damage state will result. In quantifying LPSWPPSH = 0.01, it was assumed that the above would be recognized and the action to isolate the flood would be postponed until ASW is available or LPSW suction is assured.

Sequence No. 3 $F_n\overline{Q}_S\overline{Q}_V B\overline{U}_3 YX$, Bin IV, Frequency = 3.0×10^{-7} yr^{-1}
(OPRA frequency: no sequences in OPRA)

A. Background

This sequence is referenced on page D-54 of the OPRA, similarly to sequence No. 2 discussed before. The difference from sequence 2 is that in this case critical level 2 is reached by the flood and LPSW is lost early in the sequence. It also includes the sequences in which LPSW is lost because of a break in the system or because of diversion of the backflow that provides suction to the LPSW.

The following sequences correspond to [1] to [4] and [7] to [8] on the OPRA, pages D-54 and D-55, but with B rather than $\overline{B}$. Thus, the sequences correspond to sequence 1 A discussed before with B instead of $\overline{B}$.

In all the following sequences, SSF was not initiated within 30 min, necessitating feed and bleed and RBSS actuation. However, SSF was recovered before 2 hr. i.e., before depletion of BWST and ASW cooling of the RCS through the SGs is reestablished.

In the long term, the ASW fails to run or the lake may be lowered for flood isolation and the operator fails to assure ASW suction. Because the BWST is practically empty, feed and bleed would not be successful.

B. Sequences

[1] 1.5×10^{-7} FL2N (4.1×10^{-4}) * [SSF30H (3×10^{-2})] * [ASWLTF (0.011) + SSFASWPPR (1.4×10^{-3})]

[2] 5.7×10^{-8} FL2II (5.4×10^{-3}) * [CCWMVC (0.036) + CCWAVC (0.021) + CWSRRVN (0.028)] * [SSF30H (3×10^{-2})] * [ASWLTF (2.7×10^{-3}) + SSFASWPRR (1.4×10^{-3})]

[3] 6.8×10^{-9} FL2IO (5.1×10^{-3}) * [CCWSRRVN (0.028) + CC2OAVC (3.5×10^{-3})] * SSF30H (0.03)] * [SSFASWPPR (1.4×10^{-3})]

[4] 9.1×10^{-9} FL2II (5.4×10^{-3}) * [L21F (0.013) + {L311F (0.005) + CCHXFPF (1.8×10^{-3})} * RESW12 (0.1)] * [SSF30H (3×10^{-2})] * [ASWLTF (2.7×10^{-3}) + SSFASWPPR (1.4×10^{-3})]

[5]-[6] see sequence No. 2

[7] ~1.0×10^{-8} FMN (2.7×10^{-3}) * [small, because recovery of LPSW from unit 2 is assumed]

[8] 3.7×10^{-8} FMII (8.0×10^{-3}) * [M11F (0.034) + {M321F (0.042)
+ CCHXFPF (1.8×10^{-3})} * RESW12 (0.1)]
* [SSF30H (3×10^{-2})]
* [ASWLTF (2.2×10^{-3})
+ SSFASWPPR (1.4×10^{-3})]

C. Containment Safeguard States

Failure of RBCS.

D. Discussion

The contribution from sequence No. 3 of Figure 2.2 is small and practically covered by sequence 1A. These sequences are a variation of the sequences 1A in which ASW is initiated in time, but the BWST water would also be partially consumed by the actuation of the RBSS for containment heat removal (LPSW is lost and consequently RBCS).

Sequence No. 3 $F_n\overline{Q}_S\overline{Q}_V B\overline{U}_3 YX_{36}$, Bin III, Frequency = 1.1×10^{-5} yr^{-1}
(OPRA frequency = 1.2×10^{-5} yr^{-1})

A. Background

This sequence is referenced on page D-53 and D-54, and is included in bin III in the OPRA as well. It is a case of a large flood that results in a loss of feedwater and LPSW. SSF fails to start or operator fails to initiate it in 2 hr. Thus, when the BWST is depleted by the RBSS and the HPI in 2 hr., it is assumed that the HPR will not be successful, resulting in an early core damage.

The sequences that follow correspond to the [1] through [3] on pages D-53 and D-54.

B. Core Damage Sequences

[1] 3.1×10^{-6} FL2N (4.1×10^{-4}) * [SSFASW2H (5×10^{-3})
+ SSFASWF (2.5×10^{-3})]

[2] 3.6×10^{-6} FL2II (5.4×10^{-3}) * [CCWMVC (0.036) + CCWAVC (0.021)
+ CWSSRRVN (0.028) + CCWI2OH (3×10^{-3})]
* [SSFASW2H (5×10^{-3})
+ SSFASWF (2.5×10^{-3})]

2.5×10^{-7} FL1II (5.3×10^{-4}) * [CCWMVC (0.036) + CWSRRVN (0.028)]
* [SSFASW2H (5×10^{-3})
+ SSFASWF (2.5×10^{-3})]

[3] 1.2×10^{-6} FL2IO (5.1×10^{-3}) * [CWSRRVN (0.028)
+ CC2OAVC (3.5×10^{-3})
* [SSFASW2H (5×10^{-3})
+ SSFASWF (2.5×10^{-3})]

[4] 5.7×10^{-7} FL2II (5.4×10^{-3}) * [L21F (0.013) + {L311F (0.005)
+ CCHXFPF (1.8×10^{-3})} RESW12 (0.1)]
* [SSFASW2H (5×10^{-3})
+ SSFASWF (2.5×10^{-3})]

[5] 2.3×10^{-6} FMII (8.0×10^{-3}) * [M11F (0.034) + {M321F (0.042)
+ CCHXFPF (1.8×10^{-3})} * RESW12 (0.1)]
* [SSFASW2H (5×10^{-3})
+ SSFASWF (2.5×10^{-3})]

It is assumed that the LPSW from unit 2 would be connected within 2 hr, with 0.1 probability of failure.

Additional sequences

[6] 1.4×10^{-7} FVL1IO (1.9×10^{-4}) * [CCWI5H (0.1)]
* [SSFASW2H (5×10^{-3})
+ SSFASWF (2.5×10^{-3})]

	1.3×10^{-7}	FVL1II (1.8×10^{-4}) * [CCWI5H (0.1)] * [SSFASW2H (5×10^{-3}) + SSFASWF (2.5×10^{-3})]
[7]	2.0×10^{-7}	FMN (2.7×10^{-3}) * [M361F (0.043) + CCHXFPF (1.8×10^{-3})] * RESW12 (0.1) + 0.006] * [SSFASW2H (5×10^{-3}) + SSFASWF (2.5×10^{-3})]

C. Containment Safeguard States

Failure of RBCS in all cases.

D. Discussion

The core damage sequences for accident sequence No. 3 are similar in both the OPRA and the BNL review. The change of groupings of flood categories and consideration of flow rates after isolation malfunctions in intake and outlet are seen to have resulted in some small changes only in individual sequences. However, the sum of these sequences remained unchanged.

Note that sequence No. 3 has some contribution to bin IV when the SSF is successfully initiated at 2 hr. This is given in the previous page for sequence No. 3--contribution to bin IV which amounts to about 3×10^{-7}. This is small compared to the contribution to bin III. Therefore, sequence no. 3 is mainly contributing to bin III, and this was correctly accounted for in the OPRA.

Sequence No. 4 $F_n\overline{Q}_S\overline{Q}_V BU_3$, Bin III, Frequency = 2.6×10^{-6} yr^{-1}
(OPRA frequency = 5.6×10^{-6} yr^{-1})

A. Background

This sequence is shown on pages D-52 and D-53. It is also included in the OPRA in bin III. It is a case of a large flood that causes the failure of EFW. Operator failure to initiate feed and bleed or the SSF ASW system in 30 minutes results in a loss of core cooling. BNL has judged that the operator error in not isolating the flood and in not initiating the HPI, and in not manning and initiating SSF, all three being clearly separated instructions of the flooding emergency procedure, is smaller than considered in OPRA.

B. Core Damage Sequences

The following sequences correspond to the [1] through [6] sequences in OPRA pages D-52 and D-53.

[1] 1.2×10^{-7} FL2N (4.1×10^{-4}) * [UTHPIH * SSF30H (3×10^{-4})]

(SSF30H = 3×10^{-4}: 30 minutes from the loss of EFW)

[2] 1.4×10^{-7} FL2II (5.4×10^{-3}) * (CCWMVC (0.036) + CCWAVC (0.021)
+ CWSRRVN (0.028) + CCW30H (10^{-3})]
* [UTHPIH * SSF30H (3×10^{-4})]

3.6×10^{-8} FL1II (5.3×10^{-4}) * [CCWMVC (0.036) + CWSRRVN (0.028)
+ CCWI15H (3×10^{-3})]
* [UTHPIH * SSF15H (10^{-3})]

(SSF15H = 10^{-3}: 15 minutes from the loss of EFW)

[3] 1.3×10^{-7} FL2IO (5.1×10^{-3}) * [CCWMVC (0.036) + CCWAVC (0.021)
+ CCWI30H (10^{-3}) + CWSRRVN (0.028)]
* [UTHP2H * SSF30H (3×10^{-4})]

[4] 2.7×10^{-7} FMN (2.7×10^{-3}) * [UTHPIH * SSF60H (1.0×10^{-4})]

(SSF60H = 10^{-4}: 60 minutes from loss of EFW)

[5] 8.0×10^{-7} FMII (8.0×10^{-3}) * [CCWI60H * UTHPIH
* SSF60H (1.0×10^{-4})]

[6] 1.1×10^{-6} FMIO (1.1×10^{-2}) * [CCWI60H * UTHPIH
* SSF60H (1.0×10^{-4})]

C. Containment Safeguard States

Failure of RBCS in cases [1] through [3]
No failure of RBCS in cases [4] through [6]

D. Discussion

The sequences of the OPRA were also found in the BNL analysis of this sequence No. 4. BNL considered that given the time until EFW fails (30 to 60 minutes) the probability of operator failure to initiate HPI and then also the SSF is smaller than considered by the OPRA; as explained before, this is one of the first steps in the flooding emergency procedures. In addition, BNL treatment considered that a large flood could not continue unnoticed for a long time and the operator will trip the CCW pumps with the probability of CCWI20H = 3×10^{-3} independent from his actions to initiate HPI and SSF. Therefore, for the large floods the probability of isolation malfunctions was included in BNL sequences. For the medium isolable floods, BNL followed the OPRA assumption that these floods may continue unnoticed for long times, and did not include the isolation measures malfunction. However, even if the isolation was included in these cases, it does not prevent a backflow of 20,000 gpm coming to the break if the LPSW and HPSW do not operate, so in this sequence, the operator error in controlling the LPSW flow may also be assumed.

Sequence No. 5 $F_n\overline{Q}_S Q_V \overline{UY}X_{54}$, Bin II, Frequency = 4×10^{-7} yr^{-1}
(OPRA frequency: 1.3×10^{-6} yr^{-1})

A. Background

This sequence is shown on pages D-50 and D-51 in the OPRA. It is also a bin II there. However, even though it refers to Y in its heading, the first three sequences are cases of loss of LPSW and, therefore, are covered by BNL as part of sequence No. 6--sequence $F_nQ_SQ_VUYX_{54}$ (see next sequence). All other sequences, [4], [5], and [6], are considered below.

The sequences are characterized by a medium flood that does not exceed critical level 2; i.e., only EFW is lost. Since for medium flood the EFW is lost in a time period longer than 50 minutes, it is assumed that if the PORV is opened, it is sufficient to relieve the pressure without lifting the SRVs. Thus, only operator failure to open the PORV block valve is considered. BNL considered that in a time frame of about 1 hr, the stress on the operator will be less than at the beginning of the transient, and the block valve will be opened in 90% of the cases. If the block valve remains closed, the SRV will be challenged by liquid, also because HPI may be on for injection according to procedures. A 0.1 probability of any SRV stuck open was used as in the OPRA. Then, HPR will be required with additional ASW or LPSW cooling. If HPR initation in 12 hr fails or the lake is lowered, with failure to assure the ASW and LPSW suction, a core damage state will result.

B. Core Damage Sequences

[1]-[2] included in sequence No. 6 ($F_nQ_SQ_VUY_{54}$)--contribution to bin II.

[4] 2.7×10^{-7} FMN (2.7×10^{-3}) * [RC4MV4 (0.1) * RCSRVLC (0.1)]
* [HPRF (2×10^{-3}) + XHPR12H (3×10^{-4})
+ ASWLTF (0.008)]

[5] 3.3×10^{-8} FMII (8.0×10^{-3}) * [CCWMVC (0.036) + CCWAVC (0.021)
+ CWSRRVN (0.028)]
* [RC4MV4 (0.1) * RCSRVLC (0.1)]
* [HPRF (2×10^{-3}) + XHPR12H (3×10^{-4})
+ ASWLTF (2.6×10^{-3})]

[6] 2.2×10^{-8} FMIO (1.1×10^{-2}) * [CCWMVC (0.036) + CCWAVC (0.021)
+ CWSRRVN (0.028)]
* [RC4MV4 (0.1) * RCSRVLC (0.1)]
* [HPRF (2×10^{-3}) + XHPR12H (3×10^{-4})

Additional Sequences

[7] 5.3×10^{-8} FVL1II (1.8×10^{-4}) * [CCWI1H (0.5) * {1 - CCWI5H}]
* [(RC66RVOF1 + RC4MV1] (0.88)]
* [RCSRVLC (0.1)]

$* [HPRF (2 \times 10^{-3}) + HPR12H (3 \times 10^{-4}) + ASWLTF (0.006)]$

Flood reach level 1 and is "isolated" before level 2.

[8] 1.1×10^{-8} FL2IO $(5.1 \times 10^{-3}) * [CCWMVC (0.036) + CCWAVC (0.021)] * [RC4MV4 (0.17) * RCSRVLC (0.1)] * [HPRF (2 \times 10^{-3}) + XHPR12H (3 \times 10^{-4})]$

C. Containment Safeguard States

In these sequences, RBSS is assumed to fail if HPR fails, and RBCS is assumed to fail if long term suction supply to the LPSW fails. The relative fraction can be calculated for each sequence separately.

D. Discussion

In core damage sequences [1] and [2], the LPSW is lost. They are discussed in sequence No. 6. Core damage sequence [3] is a special case of a medium flood with failure of HPR after 12 hr, similar to sequences [4] to [6] of page D-51. For a large flood (FLII or FLIO) to have a flow rate corresponding to a medium flood, it needs to be "isolated." Thus, the OPRA sequence refers to an isolated flood, i.e., with all inlet and outlet valves closed, and the break flow then corresponds to the backflow through the condensate coolers. However, in another place (page 9-157) OPRA apparently considers that the LPSW (which is available in this sequence) will consume a large part of the backflow so that the break discharge will be about 10,000 gpm which is insufficient to reach critical level 1. This assumption was confirmed in the BNL meeting with Duke Power. Furthermore, in unit 1 there is no backflow through the condensate coolers (and RCW backflow is less than 12,000 gpm), and in unit 3 the backflow can be isolated and LPSW cooling supplied from unit 2. Thus, even if the LPSW consumption is not considered (as in the case of sequence [3]), only one third of the contribution may not be isolated before the loss of EFW. Note that at a flow rate of ~15,000 gpm, the time to reach critical level 1 is more than 3 hr. Furthermore, in the BNL review the operator failure to open the block valve is assumed to be smaller than in OPRA (by a factor of ~2), so this sequence is insignificant in the BNL review.

Note that sequence [3] on page D-51 and sequence [5] on page D-55 are the same except for the SRV stuck open or successfully reclosed, respectively. However, in the latter case the isolation measure malfunctions were considered by OPRA.

Sequence [4] is similar in OPRA and the BNL review, and is affected by a higher frequency of FMN in the BNL review. Sequences [5] and [6] in the OPRA do not give credit to the backflow isolation in unit 1 and the potential isolation in unit 3 as well as to the LPSW consumption of part of the backflow before it reaches the break (the important inlet and outlet breaks are at a higher elevation than LPSW suction allowing for about 5 ft head for the LPSW suction).

The above modifications by BNL resulted in a reduced contribution in the BNL reevaluation.

Sequence No. 6 $F_n\overline{Q}_sQ_v\overline{U}YX_{54}$, Bin II, Frequency = $3x10^{-7}$ yr^{-1}
(OPRA Frequency = $3x10^{-7}$ yr^{-1})

A. Background

This sequence is shown on pages D-50 and D-51 in the OPRA. It is also a Bin II there. However, the heading for this sequence on the OPRA, page D-50 is $\overline{Y}$ although in fact the sequence described in cases [1], [2], and [3] are Y sequences. These sequences are considered here by BNL.

The sequences are characterized by a large flood that exceeds critical level 2 but not critical level 3. Thus, EFW, LPSW, and HPSW pumps are assumed to be failed by the flood. The flood would fail EFW in about 20 to 30 minutes; therefore, the probability of challenging the SRVs with the PORV open is very small. BNL accepted OPRA considerations that in 80% of the cases the block valve is closed and the operator probability of not attempting to open the block valve is 0.2; thus a probability of--RC4MV4 (0.17) is calculated for challenging the SRVs. A probability of 0.1 for a SRV sticking open is assumed. Cooling is provided by HPI with the elevated storage tank supplying the HPSW tank supplying cooling to the HPI motor bearings. These sequences consider the failure in the long term either of HPI pumps because the elevated tank is depleted and fails to be replenished [REHSTK(0.01)], or because of failure of ASW cooling of the SGs due to loss of suction or pump failure to run, i.e., no means of decay heat removal is available, since LSPW pumps are flooded.

B. Core Damage Sequences

[1] 7.0×10^{-8} FL2N (4.1×10^{-4}) * (RC4MV4 (0.17) * RCSRVLC (0.1)]
* [REHSTK (0.01]

Additional Sequence

$7.8x10^{-8}$ FL2II (5.4×10^{-3}) * [CCWMVC (0.036) + CCWAVC (0.021)
+ CCSRRVN (0.028)] * (RC4MV4(0.17)
* RCSRVLC (0.1) * REHSTK (0.01)]

[2] $8.6x10^{-8}$ FL2N (4.1×10^{-4}) * [(RC4MV4 (0.17) * RCSRVLC (0.1)]
* [(ASWLTF (0.011) + SSFASWPPR
($1.4x10^{-3}$)]

Additional Sequence

3.2×10^{-8} FL2II (5.4×10^{-3}) * [(CCWMVC (0.036) + CCWAVC (0.021)
+ CCWRRVN (0.028)]
* [RC4MV4 (0.17) * RCSRVLC (0.1)]
* [ASWLTF (2.7×10^{-3})
+ SSFASWPPR (1.4×10^{-3})]

2.5×10^{-8} FVL1II (1.8×10^{-4}) * [CCWI5H (0.1) * {1-CCW15H}]
* [(RC66RVOF1 + RC4MV1) (0.88)]
* [RCSRVLC (0.1)]
* [REHSTK (0.01) + ASWLTF (0.006)]

C. Containment Safeguard States

RBCS is unavailable as a result of the loss of LPSW.

D. Discussion

The differences between OPRA and BNL in these core damage sequences are small. They are a result of a lower frequency in BNL for the FLN flood initiator. This reduction is compensated by the inclusion in the BNL review of flood sequences of FLII with isolation measure malfunctions which are not shown in the OPRA.

Sequence No. 6 $F_n\overline{Q}_S Q_V \overline{U}YX_{57}$, Bin I, Frequency = 2.3×10^{-7} Yr^{-1}
(OPRA Frequency = 3.6×10^{-7} Yr^{-1})

A. Background

This sequence is shown on page D-50 in the OPRA. It is a case of a large flood that does not reach critical level 3, and therefore, does not fail the HPI system. LPSW is lost, and the EFW is lost very early causing a demand for pressure relief through the PORV or the SRVs. If the PORV is not sufficient to relieve the pressure or the block valve is shut and not opened in time, then the SRVs will be challenged with a probability of 0.1 assumed for their sticking open. The BWST will be depleted in about two hours by the HPI and RBSS, and both ASW and HPR (without LPI coolers) must operate to avoid loss of cooling. Because loss of cooling may occur as early as two hours into the sequence, it is assigned to early core damage class--bin I.

B. Core Damage Sequences

[1] 8.7×10^{-8} FL2N (4.1×10^{-4}) * [RC4MV4 (0.17) * RCSRVLC (0.1)]
* [SSFASW2H (5×10^{-3})
+ SSFASWF (2.5×10^{-3})
+ XHPR2H (3×10^{-3}) + HPRF (2×10^{-3})]

Additional Sequence

[2a] 2.5×10^{-8} FVL1IO (1.9×10^{-4}) * [CCWI5H (0.1) + CCWAVC (0.021)]
* [(RC66RVOF1 + RC4MV1) (0.88)
* RCSRVLC (0.1)] + [XHPR2H ($3. \times 10^{-3}$)
+ HPRF (2×10^{-3}) + SSFASW2H (5×10^{-3})
+ SSFASWF (2.5×10^{-3})]

[2b] 2.0×10^{-8} FVL1II (1.8×10^{-4}) * [CCWI5H (0.1)]
* [(RC66RVOF1 + RC4MV1) (0.88)
* RCSRVLC (0.1)] * [XHPR2H ($3. \times 10^{-3}$)
+ HPRF (2×10^{-3}) + SSFASW2H (5×10^{-3})
+ SSFASWF (2.5×10^{-3})]

[2c] 9.8×10^{-8} FL2II (5.4×10^{-3}) * [CCWMVC (0.036) + CCWAVC (0.021)
+ CWSRRVN (0.028)] * [RC4MV4 (0.17)
* RCSRVLC (0.1)] * [XHPR2H ($3. \times 10^{-3}$)
+ HPRF (2×10^{-3}) + SSFASW2H (5×10^{-3})
+ SSFASWF (2.5×10^{-3})]

C. Containment Safeguard States

Failure of RBCS in all sequences because LPSW is unavailable. It is assumed that the RBSS will be lost whenever the HPR hardware fails or the operator fails to transfer suction to containment sump. This case is about 40% of the total.

D. Discussion

There are no significant differences between OPRA and BNL in these sequences. In BNL, a large flood which was not isolated because of malfunction of the inlet or outlet isolation valves is also a contributor.

Sequence No. 7, $F_n\overline{Q}_sQ_vU$, Bin I, Frequency = 1.6×10^{-5} yr^{-1}
(OPRA Frequency = 1.8×10^{-5} yr^{-1})

A. Background

This sequence is shown on pages D-46 and D-47 of the OPRA. It is also a bin I case. This sequence is characterized by one of the following:

(a) A very large flood that causes total loss of feedwater in about 5 minutes, with the PORV unable to provide sufficient relief to prevent SRVs challenging, and any of the two SRVs fail to reclose. The flood reaches critical level 3 and fails the HPI in about 30 minutes.

(b) A large or medium flood that causes total loss of feedwater, with PORV block valve not opened by the operator in time to avoid challenging the SRVs, and any of the two SRVs fail to reclose. The flood reaches critical level 2 and fails the LPSW or it reaches critical level 1 but the break originated in the LPSW system. In addition to the loss of LPSW the alternate HPSW cooling path of the HPI motor bearing fails.

The OPRA gives six core-damage sequences. The core-damage sequences of the BNL review that correspond to those of OPRA are given below.

B. Core Damage Sequences

[1] 1.1×10^{-5} FVL2N (1.8×10^{-4}) * [(RC66RVOF2 + RC4MV2) (0.6)]
* [RCSRVLC (0.1)]

8.8×10^{-7} FVL1N (1.0×10^{-5}) * [(RC66RVOF1 + RC4MV1) (0.88)]
* [RCSRVLC (0.1)]

[2a] 1.0×10^{-6} FVL1II (1.8×10^{-4}) * [(RC66RVOF1 + RC4MV1) (0.88)]
* [RCSRVLC (0.1)]
* [CCWMVC (0.036) + CWSRVVN (0.028)]

6.9×10^{-8} FVL2II (1.8×10^{-5}) * [(RC66RVOF2 + RC2MV2 (0.6)]
* [RCSRVLC (0.1)]
* [(CCWMVC (0.036) + CWSRVVN (0.028)]

[2b] 1.1×10^{-6} FVL1IO (1.9×10^{-4}) * [(RC66RVOF1 + RC4MV1) (0.88)]
* [RCSRVLC (0.1)]
* [CCWMVC (0.036) + CWSRRVN (0.028)
+ CC2OAVC (3.5×10^{-3})]

[2c] 2.6×10^{-7} FL1IO (5.5×10^{-4}) * [(RC66RVOF3 + RC4MV3) (0.17)]
* [RCSRVLC (0.1)] * [CWSRRVN (0.028)]

[2d] 6.5×10^{-7} FL1N (3.8×10^{-5}) * [(RC66RVOF3 + RC4MV3) (0.17)]
* [RCSRSVLC (0.1)]

[3] 1.6×10^{-7} FL2N (4.1×10^{-4}) * [RC4MV4 (0.17) * RCSRVLC (0.1)]
* [HSHPIF (1.8×10^{-2})
+ SWHPSWF (4.8×10^{-3})]

[4] 1.3×10^{-8} FL1II (5.3×10^{-4}) * [CCWMVC (0.036) + CWSRRVN (0.028)]
* [(RC66RVOF3+RC4MV3) (0.17)
* RCSRVLC (0.1)] * [HSHPIF (1.8×10^{-2})
+ SWHPSWF (4.8×10^{-3})]

1.8×10^{-7} FL2II (5.4×10^{-3}) * [CCWMVC (0.036) + CCWAVC (0.021)
+ CWSRRVN (0.028)]
* [RC4MV4 (0.17) * (RCSRVLC (0.1)]
* [HSHPIF (1.8×10^{-2})
+ SWHPSWF (4.8×10^{-3})]

[5] 6.3×10^{-8} FL2IO (5.1×10^{-3}) * [CWSRRVN (0.028)
+ CC2OAVC (3.5×10^{-3})]
* [RC4MV4 (0.17)] [CSRVLC (0.1)]
* [HSHPIF (1.8×10^{-2})
+ SWHPSWF (4.8×10^{-3})]

[6] 1.4×10^{-7} FMII (8.0×10^{-3}) * [M11F(0.034) + M321F(0.042)
+ CCHXFPF(1.8×10^{-3})]
* [RC4MV5(0.1) * RCSRVLC(0.1)]
* [HSHPIF(1.8×10^{-2})
+ SWHPSWF(4.8×10^{-3})]

3.0×10^{-8} FMN (2.7×10^{-3} * [M361F (0.043) + 0.006
+ CCHXFPF (1.8×10^{-3})]
* [RC4MV5(0.1) * RCSRVLC(0.1)]
* [HSHPIF(1.8×10^{-2})
+ SWHPSWF(4.8×10^{-3})]

It is assumed here that time (30 min) is insufficient to recover the LPSW from unit 2.

C. Containment Safeguard States

Sequences [1], [2]: Both RBCS and RBSS unavailable.
Sequences [3] to [6]: Failure of RBCS.

D. Discussion

The difference between the OPRA and the BNL sequences is small. Some comments on these differences are:

1. For a very large flood 2, BNL assumed that the EFW will be lost in about 10 min, and a smaller SRV challenge probability was assumed.

2. Because of BNL groupings, FVLI is split into inlet and outlet side contributions.

3. The contribution from large flood 1, which was separated out in BNL groupings of flood categories, is not large compared to FVLN.

4. OPRA did not consider the recovery of LPSW from unit 2 in the case of FMII. This is apparent, because of the short time (30 minutes) available in this sequence. Also, for medium flood, the time to lose EFW and to challenge the SRV is larger than in the large flood case, and BNL judges that at the time of 60 minutes after initiation of the incident the operator will have less stress. Thus, BNL used a somewhat lower value for operator not attempting to open the block valve (0.1 instead of the 0.2 in OPRA). OPRA used the same value of 0.2 for both very large and medium floods.

Sequence No. 8 F_nQ_sU, Bin I, Frequency = 1.4×10^{-5} yr^{-1}
(OPRA Frequency = 1.3×10^{-5} yr^{-1})

A. Background

This sequence is shown on pages D-47 to D-49 in OPRA. It is also a bin I sequence. This sequence is characterized by one of the following:

1. A very large flood that results in failure of EFW, LPSW, and HPI. Therefore, seal cooling is lost. Failure to trip the RCP in time or failure to initiate the SSF in 30 minutes (or 90 minutes for the FL1-type flood) or failure of the SSF pumps to start, either in the make-up or the ASW systems, leads to a loss of subcooling. The operator has a procedural requirement to restart the RCPs (RCPPSH). This will cause a seal LOCA beyond SSF capability.

2. A large flood that results in loss of EFW and LPSW pumps. If the alternate HPSW path to HPI motor cooling fails, the HPI will be lost and the sequence proceeds as in (1) above.

3. A medium flood which is in the LPSW system and therefore results in loss of EFW and LPSW as before.

The OPRA gives nine core damage sequences. The BNL core damage sequences corresponding to them are given below.

B. Core Damage Sequences

[1a] 8.7×10^{-6} FVL2N(1.8×10^{-4}) * [SSF30H (0.03) + SSFSIF (0.016)]
+ SSFASWF (2.5×10^{-3})]
* [RCPPSH (1.0)]

4.8×10^{-7} FVL1N (1.0×10^{-5}) * [SSF30H (0.03) + SSFSIF (0.016)]
+ SSFASWF (2.5×10^{-3})]
* [RCPPSH (1.0)]

8.9×10^{-7} FL1N (3.8×10^{-5}) * [SSF90H (5×10^{-3}) + SSFS1F (0.016)
+ SSFASWF(2.5×10^{-3})]
* RCPPSH (1.0)

[1b] 1.8×10^{-7} FVL1II (1.8×10^{-4}) * HPRCP30H (10^{-3})
1×10^{-7} FVL1N (1.0×10^{-5}) * HPRCP15H (10^{-2})

[2a] 8.2×10^{-7} {FVL1II (1.8×10^{-4}), FVL2II (1.8×10^{-5})} + [CCWMVC (0.036) + CCWAVC (0.021)
+ CWSRRVN (0.028)]
* [SSF30H (0.03) + SSFSIF (0.016)
+ SSFASWF (2.5×10^{-3})] * RCPPSH (1.0)

[2b] 6.2×10^{-7} FVL1IO (1.9×10^{-4}) * [CCWMVC (0.036) + CWSRRVN (0.028)
+ CW20AVC (3.5×10^{-3})]
* [SSF30H (0.03) + SSFSIF (0.016)
+ SSFASWF (2.5×10^{-3})] * RCPPSH (1.0)

[2c] 3.0×10^{-7} FL1IO (5.5×10^{-4}) * [CWSRRVN (0.028)]
* [SSF9OH (5×10^{-3})
+ SSFSIF (1.6×10^{-2})
+ SSFASWF (2.5×10^{-3})] * RCPPSH (1.0)

[3a] 1.5×10^{-7} FVL1II (1.8×10^{-4}) * [CCWMVC (0.036) + CCWAVC (0.021)
+ CWSRRVN (0.028)] * HPRCP15H (10^{-2})

[3b] 1.3×10^{-7} FVL1IO (1.9×10^{-4}) * [CCWMVC (0.036) + CWSRRVN (0.028)
+ CW2OAVC (3.5×10^{-3})] * HPRCP15H (10^{-2})

[3c] ε FL1IO (5.5×10^{-4}) * [CWSRRVN (0.028)]
* [HSHPIF (1.8×10^{-2})
+ SWHPSWF (4.8×10^{-3})]
* [HPRCP6OH (10^{-3})]

[3d] 9.4×10^{-8} FL2N (4.1×10^{-4}) * [HSHPIF (1.8×10^{-2})
+ SWHPSWF (4.8×10^{-3})]
* [HPRCP6OH (10^{-3})]

[3e] 7.0×10^{-9} FMII (8×10^{-3}) * [M11F(0.034) + {M321F (0.042)
+ CCHXFPF (1.8×10^{-3})} * RESW12 (0.1)]
* [HSHPIF (1.8×10^{-2})
+ SWHPSWF (4.8×10^{-3})]
* [HPRCP6OH (10^{-3})]

[4] 2.2×10^{-7} FL2N (4.1×10^{-4}) * [HSHP1F (1.8×10^{-2})
+ SWHPSWF (4.8×10^{-3})]
* [SSF9OH (5.10^{-3}) + SSFS1F (1.6×10^{-2})
+ SSFASWF (2.5×10^{-3})] * RCPPSH (1.0)

[5a] 2.5×10^{-7} FL2II (5.4×10^{-3}) * [CCWMVC (0.036) + CCWAVC (0.021)
+ CWSRRVN (0.028)] * RCPPSH (1.0)
* [HSHPIF (1.8×10^{-2})
+ SWHPSWF (4.8×10^{-3})]
* [(SSF9OH (5×10^{-3})
+ SSFS1F (1.6×10^{-2})
+ SSFASW (2.5×10^{-3})]

[6] 8.6×10^{-8} FL2IO (5.1×10^{-3}) * [CWSRRVN (0.028)
+ CW2OAVC (3.5×10^{-3})] * RCPPSH (1.0)
* [HSHPIF (1.8×10^{-2})
+ SWHPSWF (4.8×10^{-3})]
* [(SSF9OH (5×10^{-3})
+ SSFS1F (1.6×10^{-2})
+ SSFASW (2.5×10^{-3})]

[7] 5.8×10^{-8} FL2II (5.4×10^{-3}) * [L311F (0.005) + L21F (0.013)
+ CCHXFPF (1.8×10^{-3})]
* [HSHPIF (1.8×10^{-2})
+ SWHPSWF (4.8×10^{-3})]
* [SSF9OH (5×10^{-3})

+ SSFSIF (1.6×10^{-2})
+ SSFASWF (2.5×10^{-3})] * RCPPSH (1.0)

[8] 7.4×10^{-8} FMN (2.7×10^{-3}) * [M361F (0.043) + 0.006
+ CCHXFPF (1.8×10^{-3})]
* [HSHPIF (1.8×10^{-2})
+ SWHPSWF (4.8×10^{-3})]
* [SSF90H (5×10^{-3})
+ SSFSIF (1.6×10^{-2})
+ SSFASWF (2.5×10^{-3})] * RCPPSH (1.0)

[9] 3.3×10^{-7} FMII (8.0×10^{-3}) * [M11F (0.034) + M321F (0.042)
+ CCHXFPF ($1.8.10^{-3}$)]
* [HSHPIF (1.8×10^{-2})
+ SWHPSWF (4.8×10^{-3})]
* [SSF90H (5×10^{-3})
+ SSFSIF (1.6×10^{-2})
+ SSFASWF (2.5×10^{-3})] * RCPPSH (1.0)

It is assumed in the last three sequences that time (30 minutes) is insufficient to recover LPSW from unit 2.

C. Containment Safeguard States

Sequences [1] to [3] fail the LPSW and RBSS pumps, so both RBCS and RBSS are unavailable.

Sequences [4] to [9] fail LPSW only, and only RBCS is unavailable.

D. Discussion

These seal LOCA sequences are similar to the OPRA results with small differences. The addition of subcategory FL1N that can reach critical level 3 in the BNL reevaluation has a small effect of less than 10%. This is because more time to initiate the SSF is available in this case (i.e., 90 min) so that a lower value, consistent with OPRA value for not initiating the SSF in 2 hr, was used by BNL. It can be concluded, from this case and the sequences discussed earlier, that the grouping made by BNL to refine the flooding categories has an overall small impact indicating that OPRA flooding categories were adequate.

The contribution of large floods in the BNL analysis is lower because it is assumed that 90 minutes is available to the operator to initiate SSF before HPI pumps will be flooded. OPRA assumed the same 30 minutes as in the case of a very large flood, which is unrealistic.

APPENDIX C

FAULT TREES FOR THE POSSIBILITIES OF FLOODING REACHING CRITICAL LEVELS

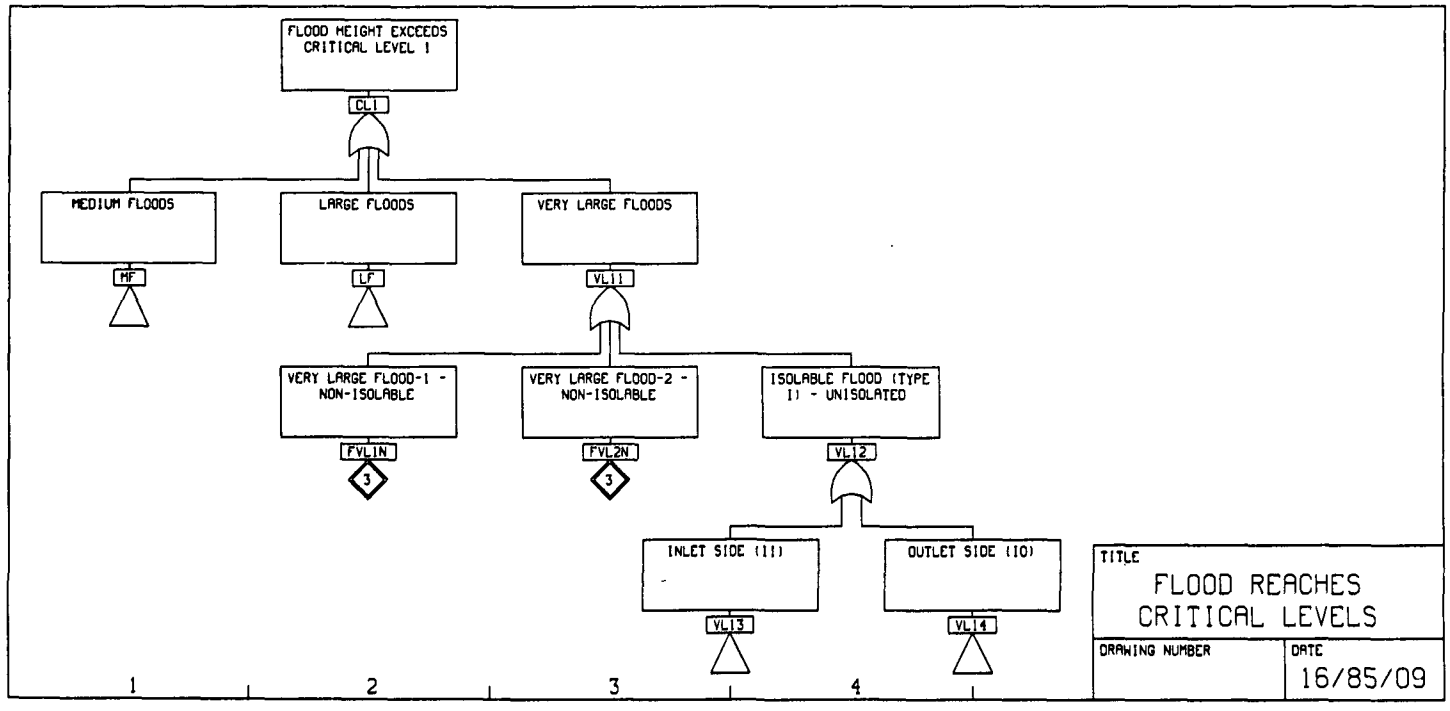
FLOOD HEIGHT EXCEEDS CRITICAL LEVEL 1
CL1
MEDIUM FLOODS
MF
LARGE FLOODS
LF
VERY LARGE FLOODS
VL11
VERY LARGE FLOOD-1 - NON-ISOLABLE
FVL1N
3
VERY LARGE FLOOD-2 - NON-ISOLABLE
FVL2N
3
ISOLABLE FLOOD (TYPE I) - UNISOLATED
VL12
INLET SIDE (I1)
VL13
OUTLET SIDE (I0)
VL14
1
2
3
4
TITLE
FLOOD REACHES CRITICAL LEVELS
DRAWING NUMBER
DATE
16/85/09

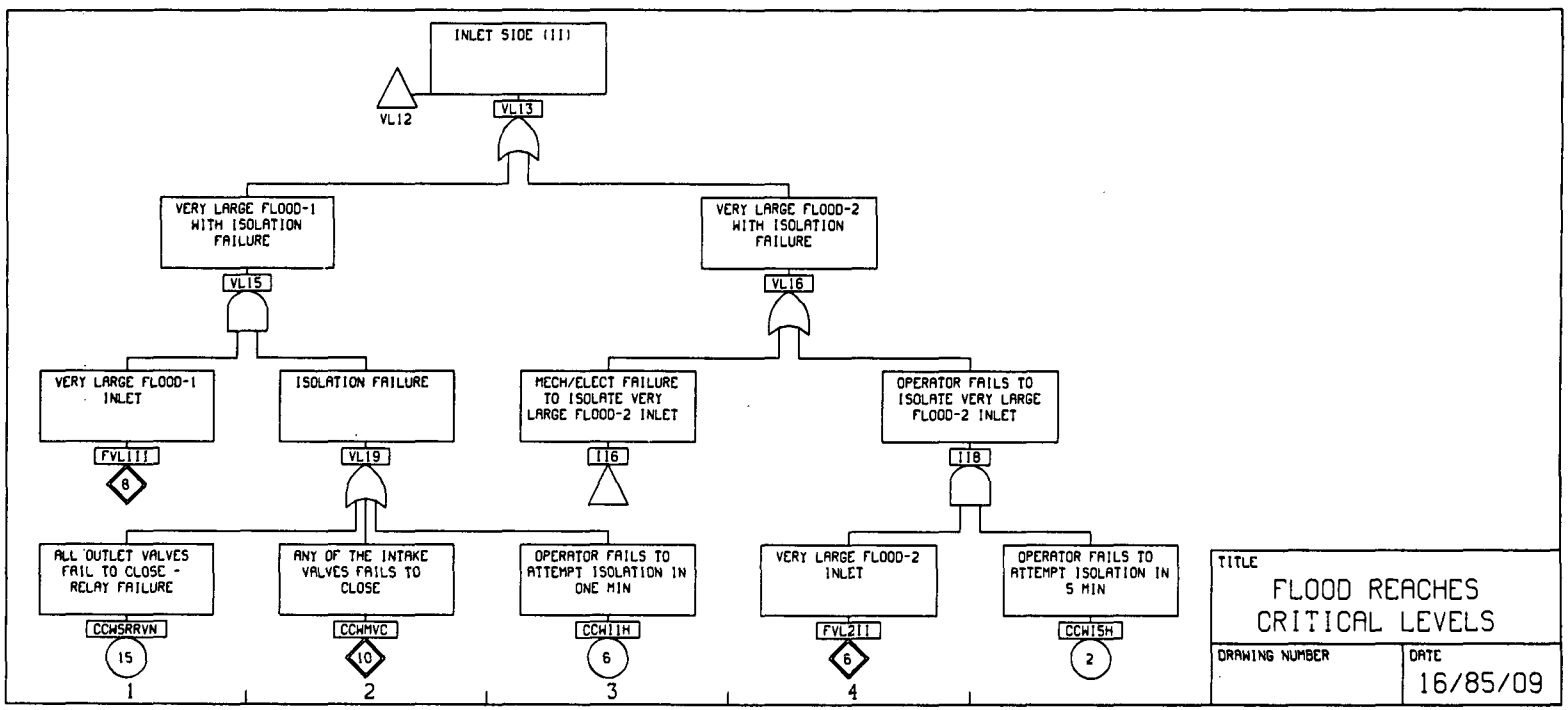
INLET SIDE (II)
VL12
VL13
VERY LARGE FLOOD-1 WITH ISOLATION FAILURE
VL15
VERY LARGE FLOOD-2 WITH ISOLATION FAILURE
VL16
VERY LARGE FLOOD-1 INLET
FVL1II
8
ISOLATION FAILURE
VL19
MECH/ELECT FAILURE TO ISOLATE VERY LARGE FLOOD-2 INLET
I16
OPERATOR FAILS TO ISOLATE VERY LARGE FLOOD-2 INLET
I18
ALL OUTLET VALVES FAIL TO CLOSE - RELAY FAILURE
CCW5RRVN
15
1
ANY OF THE INTAKE VALVES FAILS TO CLOSE
CCWMVC
10
2
OPERATOR FAILS TO ATTEMPT ISOLATION IN ONE MIN
CCWI1H
6
3
VERY LARGE FLOOD-2 INLET
FVL2II
6
4
OPERATOR FAILS TO ATTEMPT ISOLATION IN 5 MIN
CCWI5H
2
TITLE
FLOOD REACHES CRITICAL LEVELS
DRAWING NUMBER
DATE
16/85/09

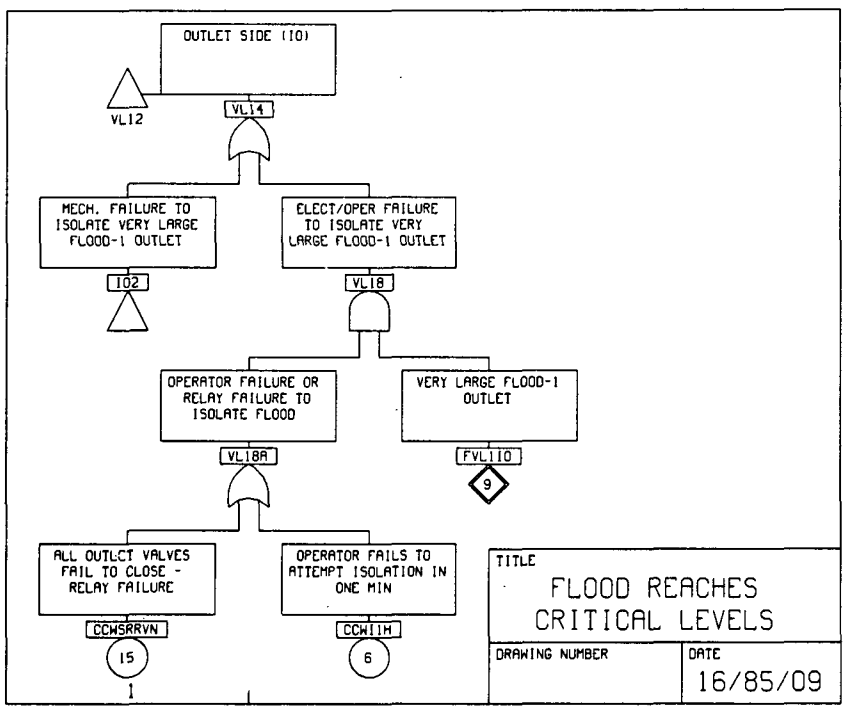
OUTLET SIDE (10)
VL12
VL14
MECH. FAILURE TO ISOLATE VERY LARGE FLOOD-1 OUTLET
ELECT/OPER FAILURE TO ISOLATE VERY LARGE FLOOD-1 OUTLET
102
VL18
OPERATOR FAILURE OR RELAY FAILURE TO ISOLATE FLOOD
VERY LARGE FLOOD-1 OUTLET
VL18A
FVL110
9
ALL OUTLET VALVES FAIL TO CLOSE - RELAY FAILURE
OPERATOR FAILS TO ATTEMPT ISOLATION IN ONE MIN
CCWSRRVN
CCWI1H
15
6
1
TITLE
FLOOD REACHES CRITICAL LEVELS
DRAWING NUMBER
DATE
16/85/09

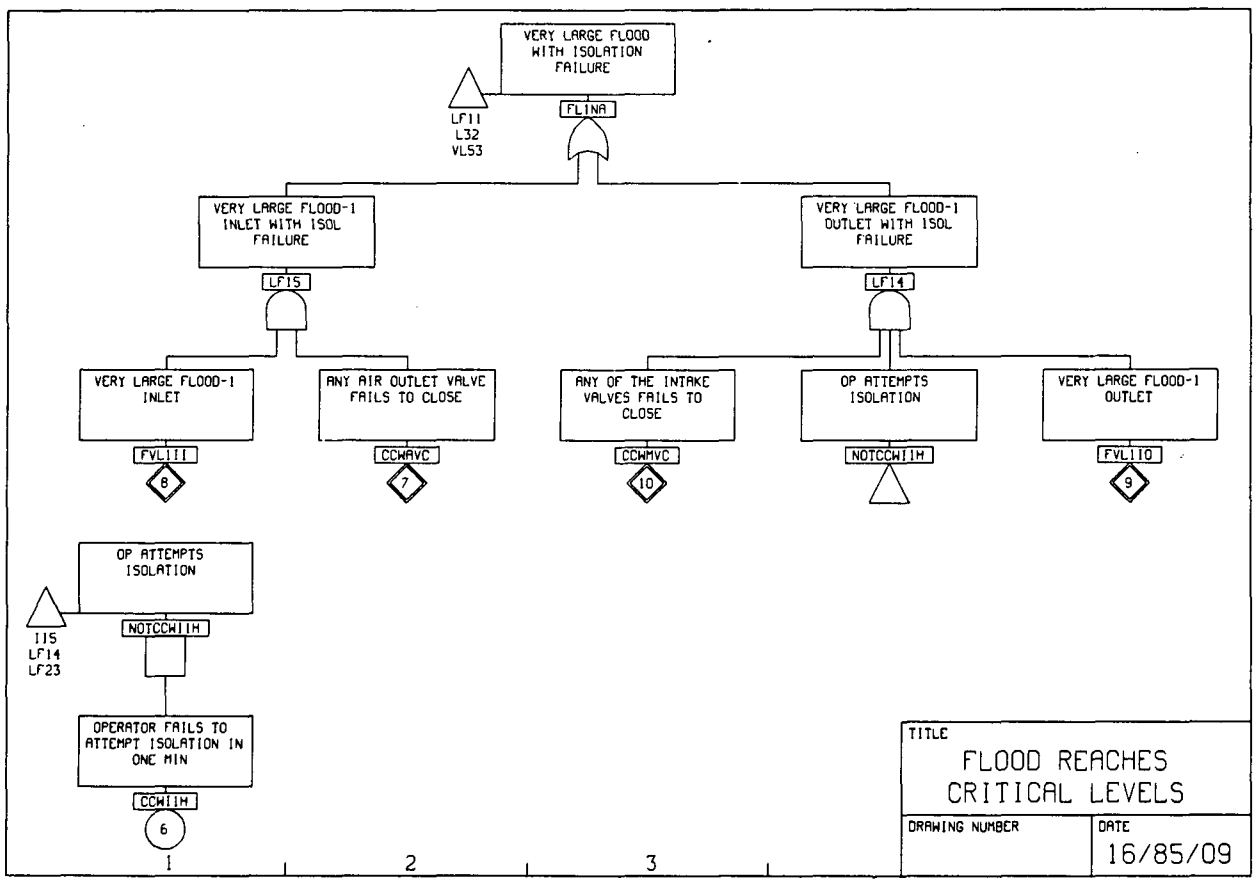
VERY LARGE FLOOD WITH ISOLATION FAILURE
FL1NA
LF11
L32
VL53
VERY LARGE FLOOD-1 INLET WITH ISOL FAILURE
LF15
VERY LARGE FLOOD-1 OUTLET WITH ISOL FAILURE
LF14
VERY LARGE FLOOD-1 INLET
FVL111
8
ANY AIR OUTLET VALVE FAILS TO CLOSE
CCWAVC
7
ANY OF THE INTAKE VALVES FAILS TO CLOSE
CCWMVC
10
OP ATTEMPTS ISOLATION
NOTCCW11H
VERY LARGE FLOOD-1 OUTLET
FVL110
9
OP ATTEMPTS ISOLATION
NOTCCW11H
115
LF14
LF23
OPERATOR FAILS TO ATTEMPT ISOLATION IN ONE MIN
CCW11H
6
1
2
3
TITLE
FLOOD REACHES CRITICAL LEVELS
DRAWING NUMBER
DATE
16/85/09

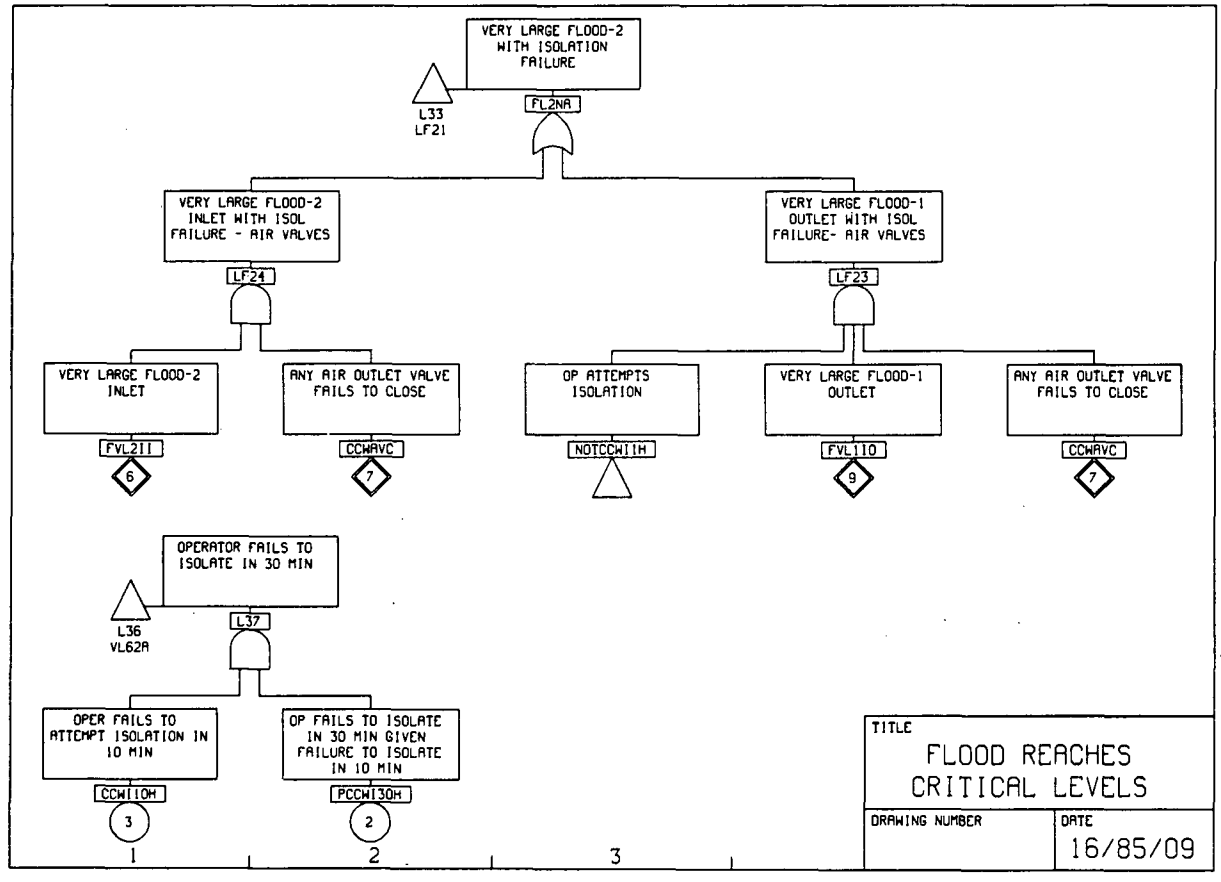
VERY LARGE FLOOD-2 WITH ISOLATION FAILURE
FL2NA
L33
LF21
VERY LARGE FLOOD-2 INLET WITH ISOL FAILURE - AIR VALVES
LF24
VERY LARGE FLOOD-1 OUTLET WITH ISOL FAILURE- AIR VALVES
LF23
VERY LARGE FLOOD-2 INLET
FVL2II
6
ANY AIR OUTLET VALVE FAILS TO CLOSE
CCWAVC
7
OP ATTEMPTS ISOLATION
NOTCCWIIH
VERY LARGE FLOOD-1 OUTLET
FVL1IO
9
ANY AIR OUTLET VALVE FAILS TO CLOSE
CCWAVC
7
OPERATOR FAILS TO ISOLATE IN 30 MIN
L36
VL62A
L37
OPER FAILS TO ATTEMPT ISOLATION IN 10 MIN
CCWI10H
3
OP FAILS TO ISOLATE IN 30 MIN GIVEN FAILURE TO ISOLATE IN 10 MIN
PCCWI30H
2
1
2
3
TITLE
FLOOD REACHES CRITICAL LEVELS
DRAWING NUMBER
DATE
16/85/09

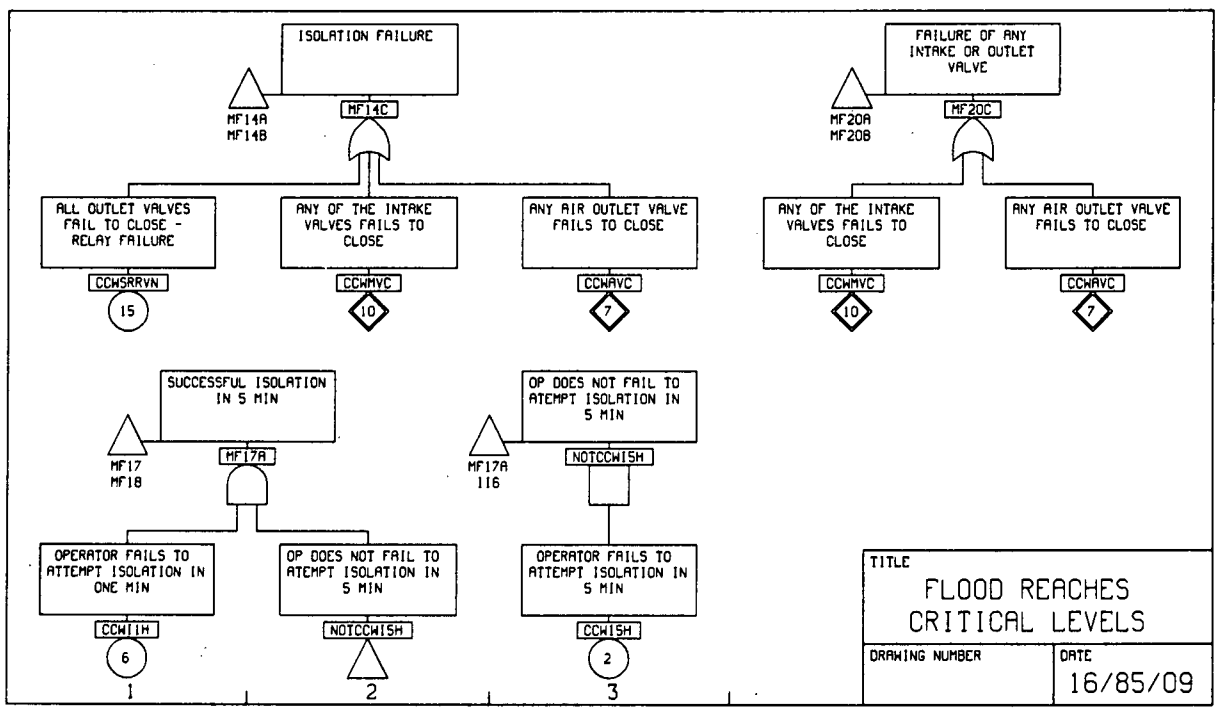
ISOLATION FAILURE
MF14A
MF14B
MF14C
ALL OUTLET VALVES FAIL TO CLOSE - RELAY FAILURE
CCWSRRVN
15
ANY OF THE INTAKE VALVES FAILS TO CLOSE
CCWMVC
10
ANY AIR OUTLET VALVE FAILS TO CLOSE
CCWAVC
7
FAILURE OF ANY INTAKE OR OUTLET VALVE
MF20A
MF20B
MF20C
ANY OF THE INTAKE VALVES FAILS TO CLOSE
CCWMVC
10
ANY AIR OUTLET VALVE FAILS TO CLOSE
CCWAVC
7
SUCCESSFUL ISOLATION IN 5 MIN
MF17
MF18
MF17A
OPERATOR FAILS TO ATTEMPT ISOLATION IN ONE MIN
CCWIIH
6
1
OP DOES NOT FAIL TO ATEMPT ISOLATION IN 5 MIN
NOTCCWISH
2
OP DOES NOT FAIL TO ATEMPT ISOLATION IN 5 MIN
MF17A
116
NOTCCWISH
OPERATOR FAILS TO ATTEMPT ISOLATION IN 5 MIN
CCWISH
2
3
TITLE
FLOOD REACHES CRITICAL LEVELS
DRAWING NUMBER
DATE
16/85/09

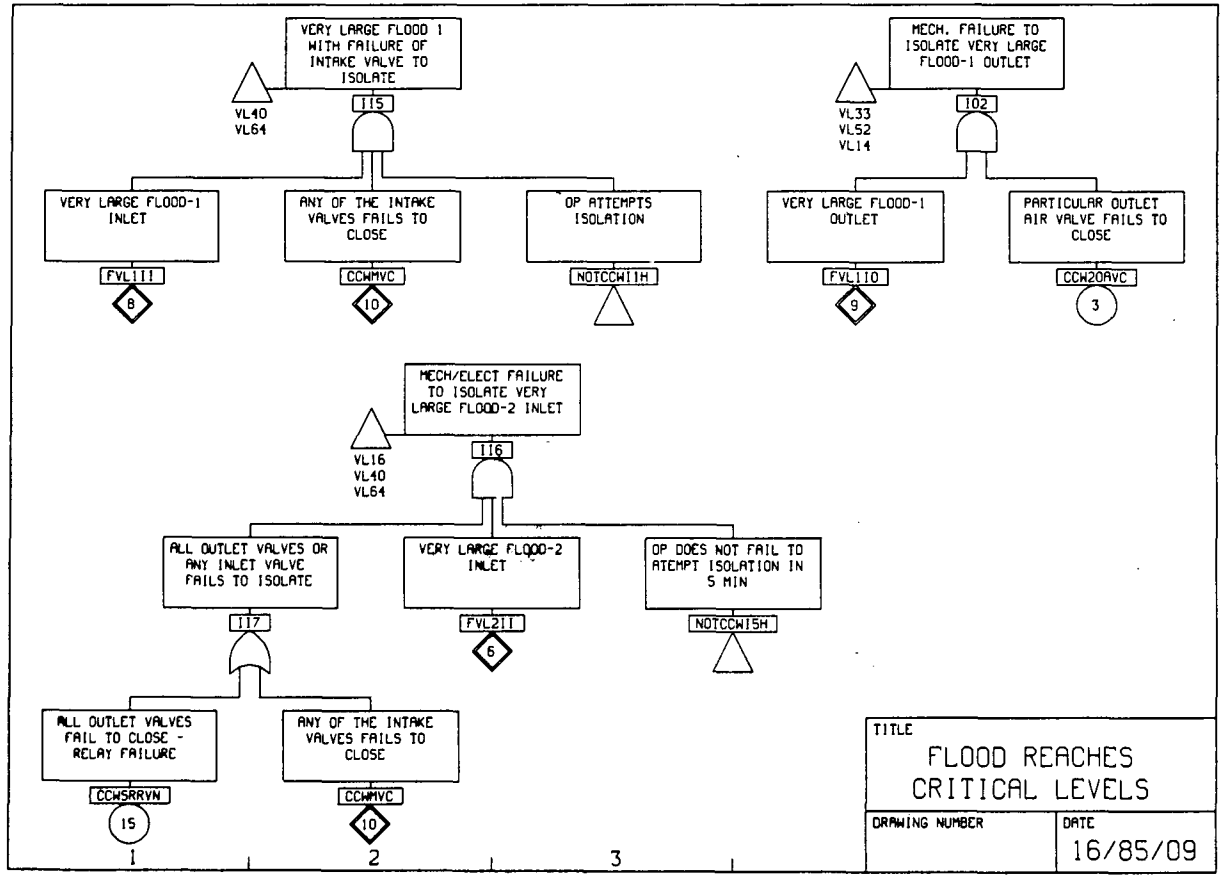
VERY LARGE FLOOD 1 WITH FAILURE OF INTAKE VALVE TO ISOLATE
VL40
VL64
I15
VERY LARGE FLOOD-1 INLET
FVL111
8
ANY OF THE INTAKE VALVES FAILS TO CLOSE
CCWMVC
10
OP ATTEMPTS ISOLATION
NOTCCWI1H
MECH. FAILURE TO ISOLATE VERY LARGE FLOOD-1 OUTLET
VL33
VL52
VL14
I02
VERY LARGE FLOOD-1 OUTLET
FVL110
9
PARTICULAR OUTLET AIR VALVE FAILS TO CLOSE
CCW20AVC
3
MECH/ELECT FAILURE TO ISOLATE VERY LARGE FLOOD-2 INLET
VL16
VL40
VL64
I16
ALL OUTLET VALVES OR ANY INLET VALVE FAILS TO ISOLATE
I17
VERY LARGE FLOOD-2 INLET
FVL211
6
OP DOES NOT FAIL TO ATEMPT ISOLATION IN 5 MIN
NOTCCWI5H
ALL OUTLET VALVES FAIL TO CLOSE - RELAY FAILURE
CCWSRRVN
15
ANY OF THE INTAKE VALVES FAILS TO CLOSE
CCWMVC
10
1
2
3
TITLE
FLOOD REACHES CRITICAL LEVELS
DRAWING NUMBER
DATE
16/85/09

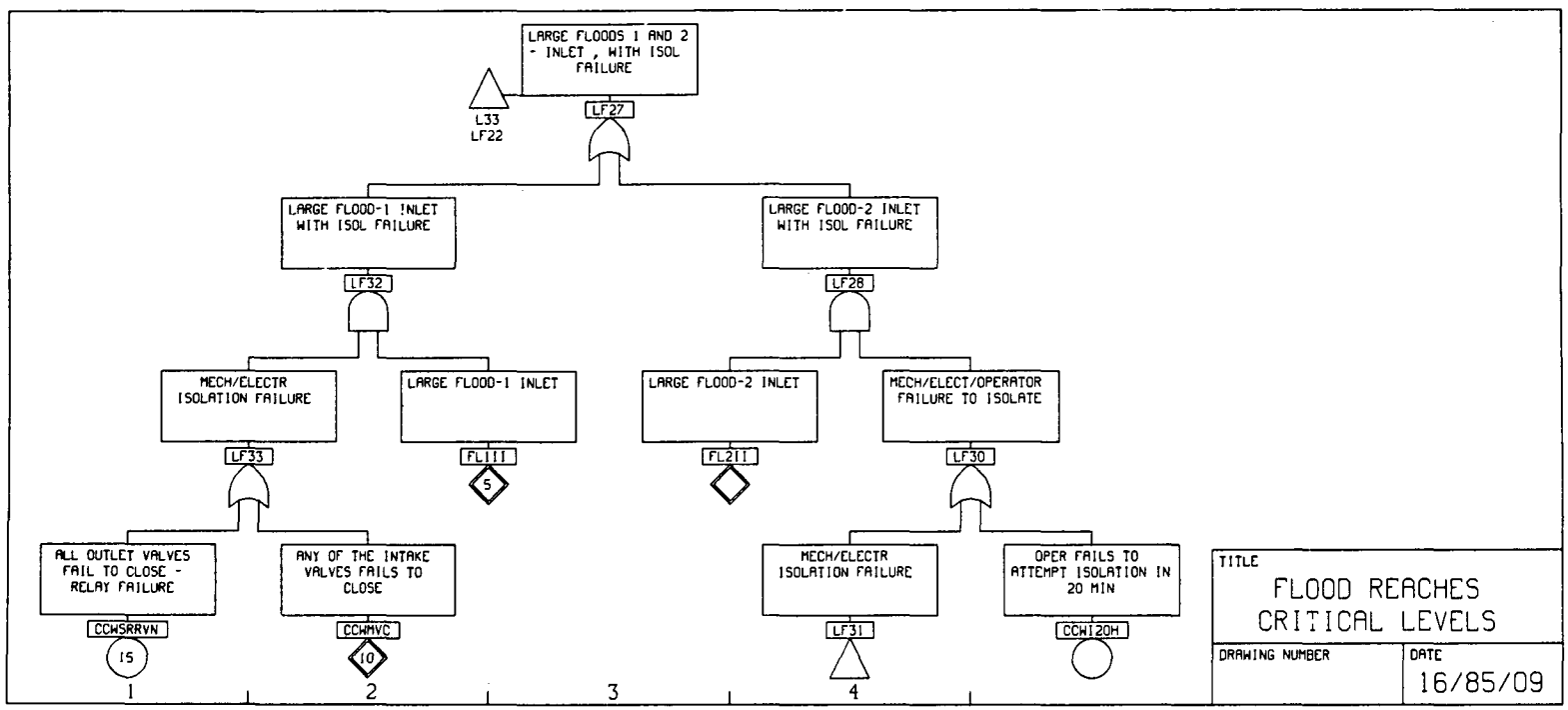
LARGE FLOODS 1 AND 2 - INLET , WITH ISOL FAILURE
L33
LF22
LF27
LARGE FLOOD-1 INLET WITH ISOL FAILURE
LARGE FLOOD-2 INLET WITH ISOL FAILURE
LF32
LF28
MECH/ELECTR ISOLATION FAILURE
LARGE FLOOD-1 INLET
LARGE FLOOD-2 INLET
MECH/ELECT/OPERATOR FAILURE TO ISOLATE
LF33
FL111
5
FL211
LF30
ALL OUTLET VALVES FAIL TO CLOSE - RELAY FAILURE
ANY OF THE INTAKE VALVES FAILS TO CLOSE
MECH/ELECTR ISOLATION FAILURE
OPER FAILS TO ATTEMPT ISOLATION IN 20 MIN
CCWSRRVN
15
CCWMVC
10
LF31
CCWI20H
1
2
3
4
TITLE
FLOOD REACHES CRITICAL LEVELS
DRAWING NUMBER
DATE
16/85/09

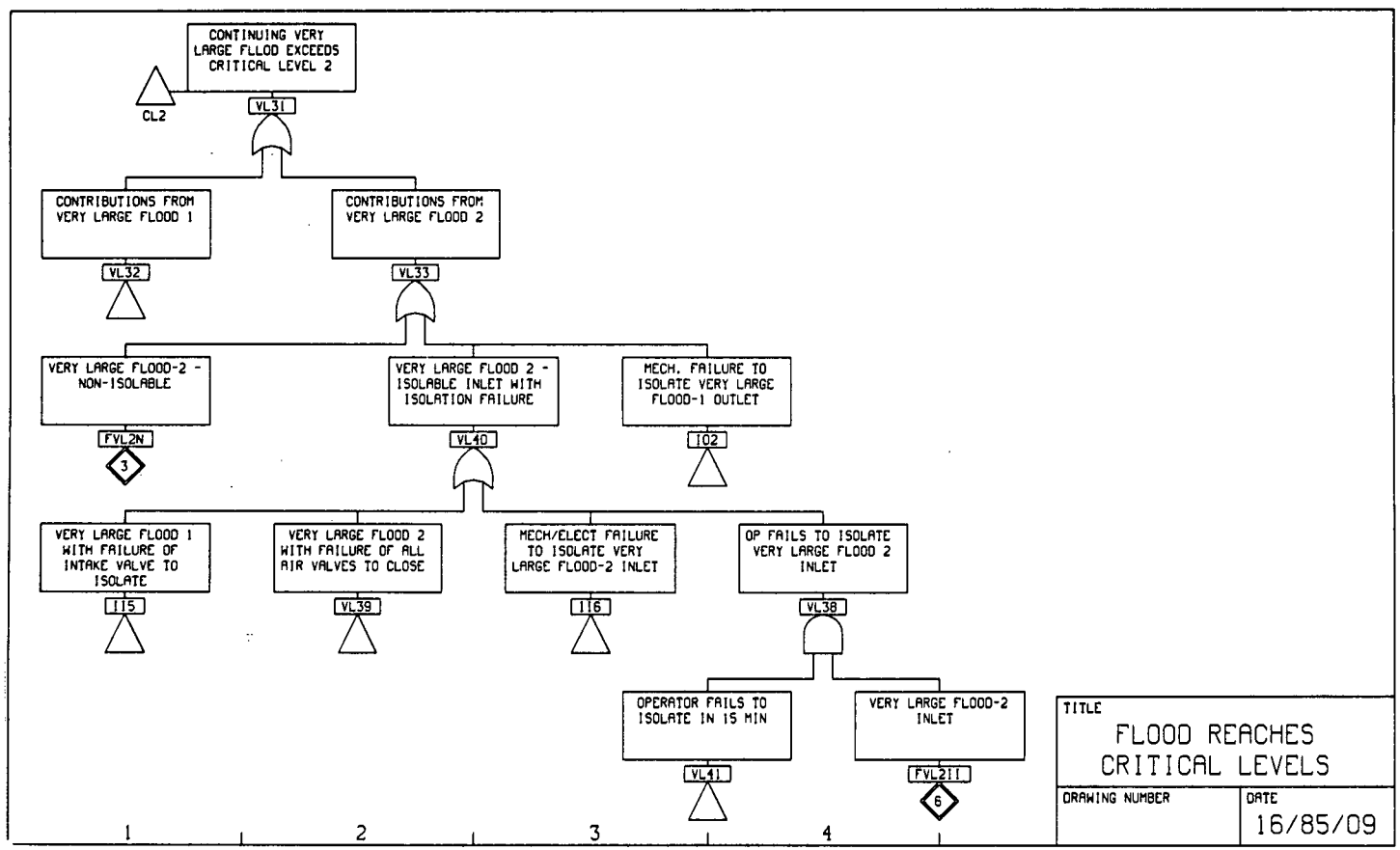
CONTINUING VERY LARGE FLLOD EXCEEDS CRITICAL LEVEL 2
CL2
VL31
CONTRIBUTIONS FROM VERY LARGE FLOOD 1
VL32
CONTRIBUTIONS FROM VERY LARGE FLOOD 2
VL33
VERY LARGE FLOOD-2 - NON-ISOLABLE
FVL2N
3
VERY LARGE FLOOD 2 - ISOLABLE INLET WITH ISOLATION FAILURE
VL40
MECH. FAILURE TO ISOLATE VERY LARGE FLOOD-1 OUTLET
I02
VERY LARGE FLOOD 1 WITH FAILURE OF INTAKE VALVE TO ISOLATE
I15
VERY LARGE FLOOD 2 WITH FAILURE OF ALL AIR VALVES TO CLOSE
VL39
MECH/ELECT FAILURE TO ISOLATE VERY LARGE FLOOD-2 INLET
I16
OP FAILS TO ISOLATE VERY LARGE FLOOD 2 INLET
VL38
OPERATOR FAILS TO ISOLATE IN 15 MIN
VL41
VERY LARGE FLOOD-2 INLET
FVL2II
6
1
2
3
4
TITLE
FLOOD REACHES CRITICAL LEVELS
DRAWING NUMBER
DATE
16/85/09

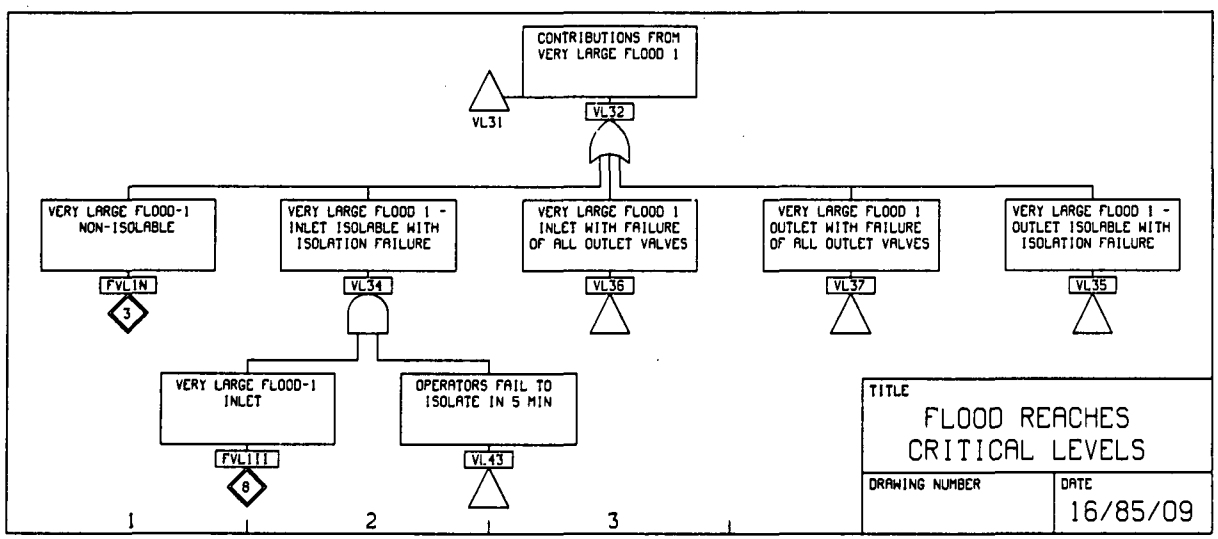
CONTRIBUTIONS FROM VERY LARGE FLOOD 1
VL31
VL32
VERY LARGE FLOOD-1 NON-ISOLABLE
FVL1N
3
VERY LARGE FLOOD 1 - INLET ISOLABLE WITH ISOLATION FAILURE
VL34
VERY LARGE FLOOD 1 INLET WITH FAILURE OF ALL OUTLET VALVES
VL36
VERY LARGE FLOOD 1 OUTLET WITH FAILURE OF ALL OUTLET VALVES
VL37
VERY LARGE FLOOD 1 - OUTLET ISOLABLE WITH ISOLATION FAILURE
VL35
VERY LARGE FLOOD-1 INLET
FVL111
8
OPERATORS FAIL TO ISOLATE IN 5 MIN
VL43
1
2
3
TITLE
FLOOD REACHES CRITICAL LEVELS
DRAWING NUMBER
DATE
16/85/09

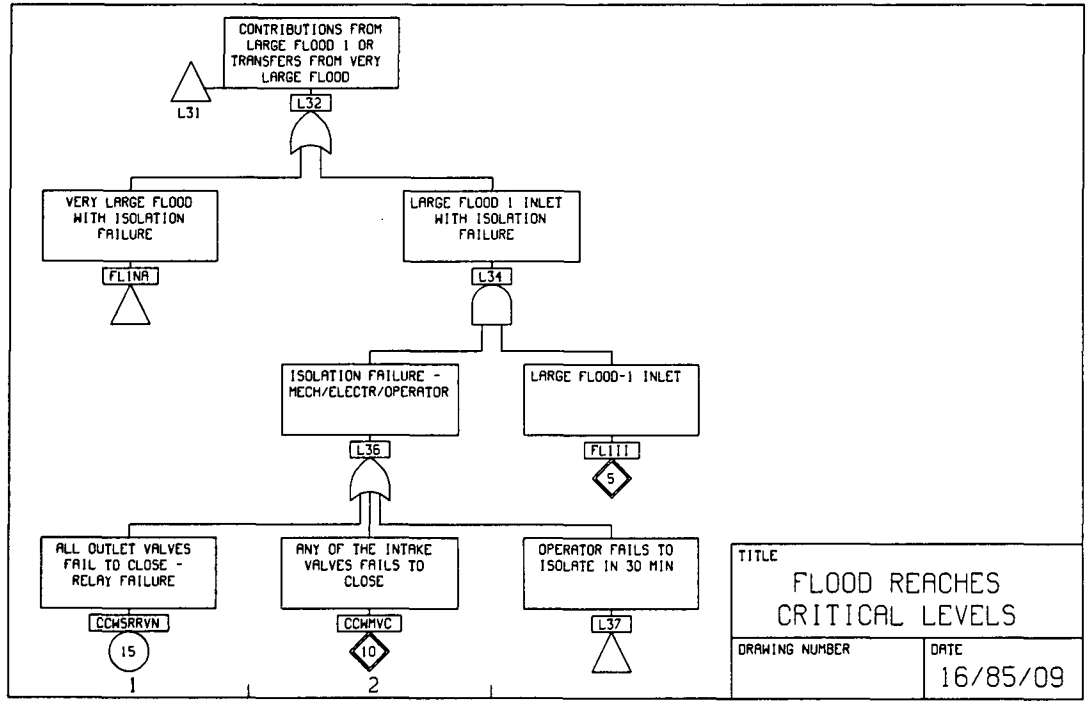
CONTRIBUTIONS FROM LARGE FLOOD 1 OR TRANSFERS FROM VERY LARGE FLOOD
L31
L32
VERY LARGE FLOOD WITH ISOLATION FAILURE
FLINA
LARGE FLOOD 1 INLET WITH ISOLATION FAILURE
L34
ISOLATION FAILURE - MECH/ELECTR/OPERATOR
L36
LARGE FLOOD-1 INLET
FLIII
5
ALL OUTLET VALVES FAIL TO CLOSE - RELAY FAILURE
CCWSRRVN
15
1
ANY OF THE INTAKE VALVES FAILS TO CLOSE
CCWMVC
10
2
OPERATOR FAILS TO ISOLATE IN 30 MIN
L37
TITLE
FLOOD REACHES CRITICAL LEVELS
DRAWING NUMBER
DATE
16/85/09

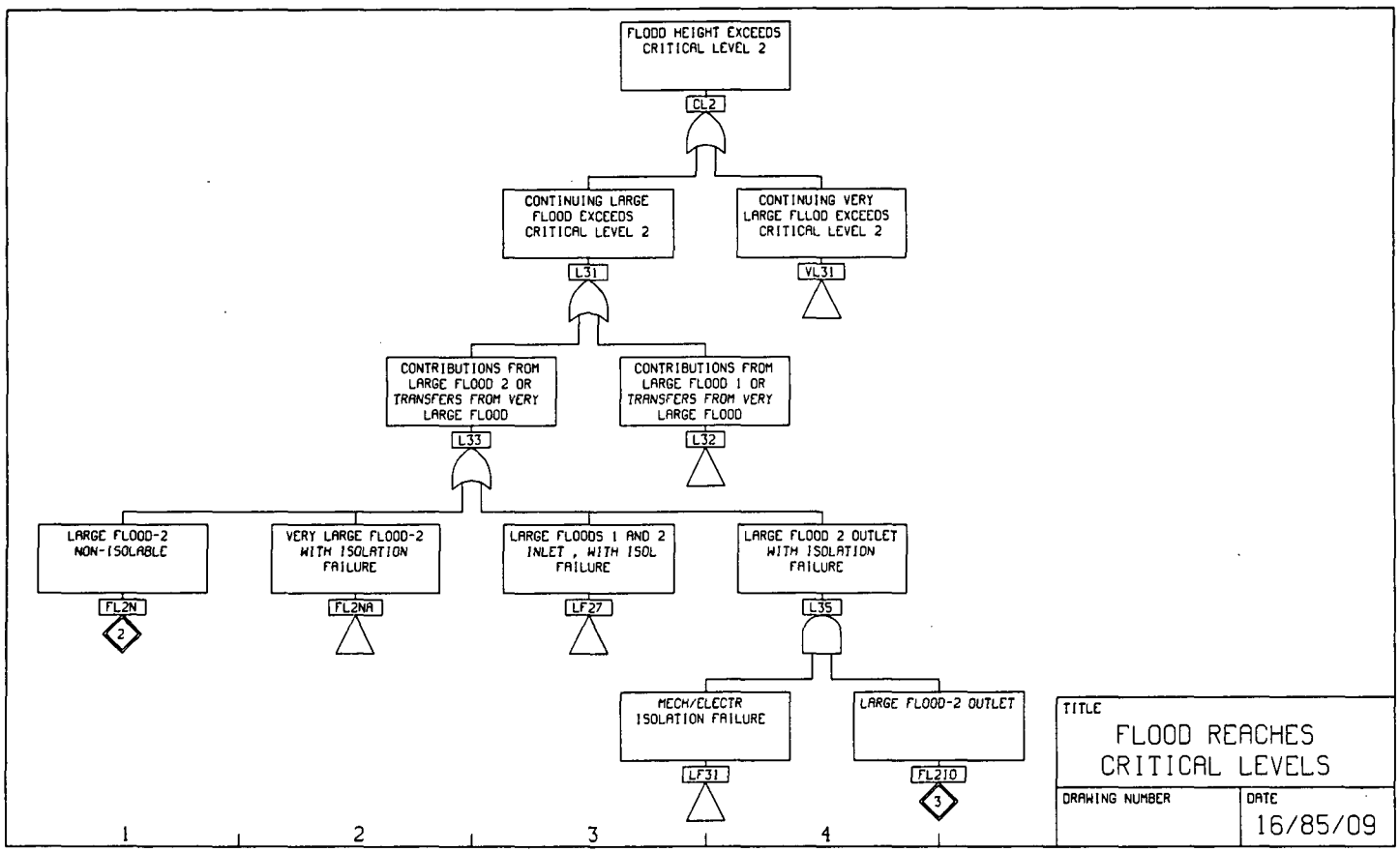
FLOOD HEIGHT EXCEEDS CRITICAL LEVEL 2
CL2
CONTINUING LARGE FLOOD EXCEEDS CRITICAL LEVEL 2
CONTINUING VERY LARGE FLLOD EXCEEDS CRITICAL LEVEL 2
L31
VL31
CONTRIBUTIONS FROM LARGE FLOOD 2 OR TRANSFERS FROM VERY LARGE FLOOD
CONTRIBUTIONS FROM LARGE FLOOD 1 OR TRANSFERS FROM VERY LARGE FLOOD
L33
L32
LARGE FLOOD-2 NON-ISOLABLE
VERY LARGE FLOOD-2 WITH ISOLATION FAILURE
LARGE FLOODS 1 AND 2 INLET , WITH ISOL FAILURE
LARGE FLOOD 2 OUTLET WITH ISOLATION FAILURE
FL2N
2
FL2NA
LF27
L35
MECH/ELECTR ISOLATION FAILURE
LARGE FLOOD-2 OUTLET
LF31
FL2I0
3
1
2
3
4
TITLE
FLOOD REACHES CRITICAL LEVELS
DRAWING NUMBER
DATE
16/85/09

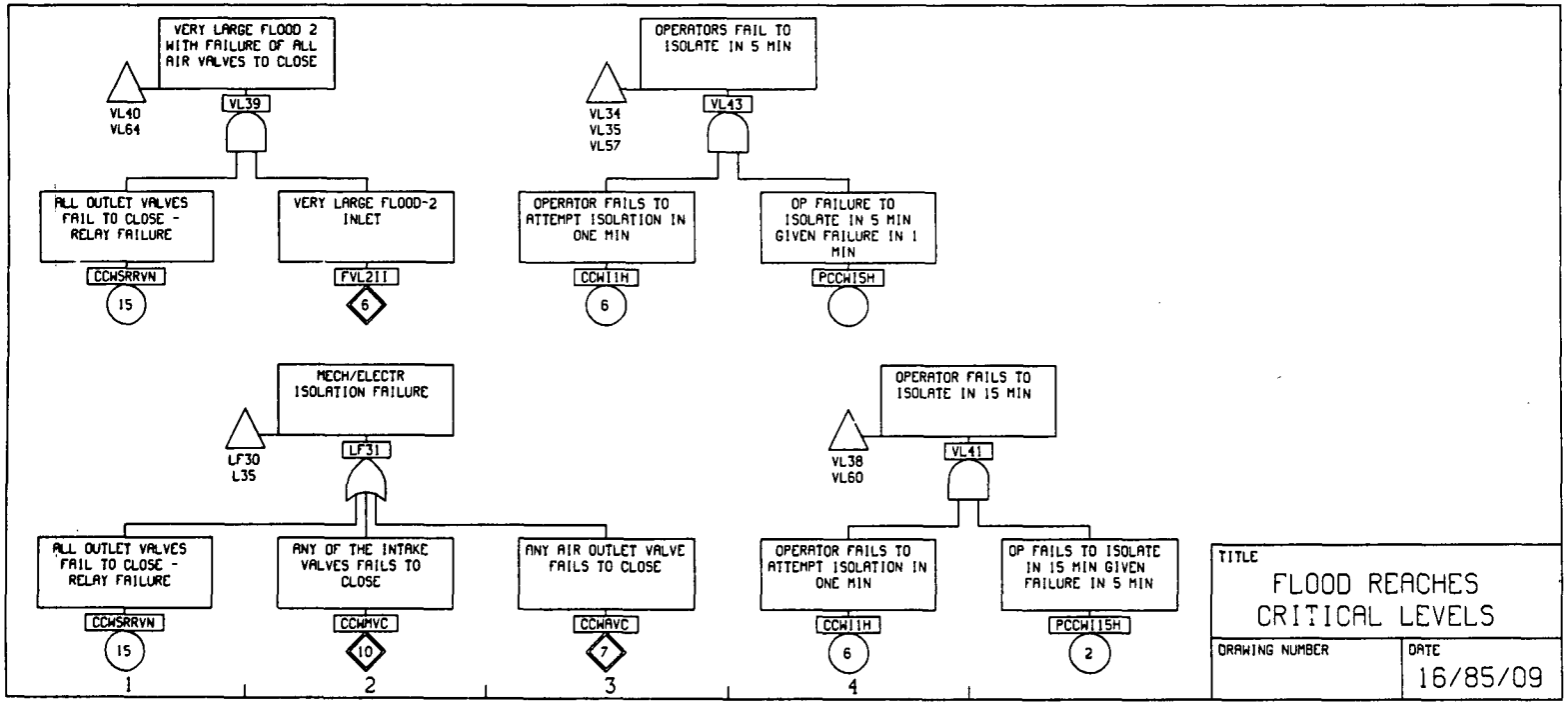
VERY LARGE FLOOD 2 WITH FAILURE OF ALL AIR VALVES TO CLOSE
VL40
VL64
VL39
ALL OUTLET VALVES FAIL TO CLOSE - RELAY FAILURE
CCWSRRVN
15
VERY LARGE FLOOD-2 INLET
FVL2II
6
OPERATORS FAIL TO ISOLATE IN 5 MIN
VL34
VL35
VL57
VL43
OPERATOR FAILS TO ATTEMPT ISOLATION IN ONE MIN
CCWI1H
6
OP FAILURE TO ISOLATE IN 5 MIN GIVEN FAILURE IN 1 MIN
PCCWI5H
MECH/ELECTR ISOLATION FAILURE
LF30
L35
LF31
ALL OUTLET VALVES FAIL TO CLOSE - RELAY FAILURE
CCWSRRVN
15
1
ANY OF THE INTAKE VALVES FAILS TO CLOSE
CCWMVC
10
2
ANY AIR OUTLET VALVE FAILS TO CLOSE
CCWAVC
7
3
OPERATOR FAILS TO ISOLATE IN 15 MIN
VL38
VL60
VL41
OPERATOR FAILS TO ATTEMPT ISOLATION IN ONE MIN
CCWI1H
6
4
OP FAILS TO ISOLATE IN 15 MIN GIVEN FAILURE IN 5 MIN
PCCWI15H
2
TITLE
FLOOD REACHES CRITICAL LEVELS
DRAWING NUMBER
DATE
16/85/09

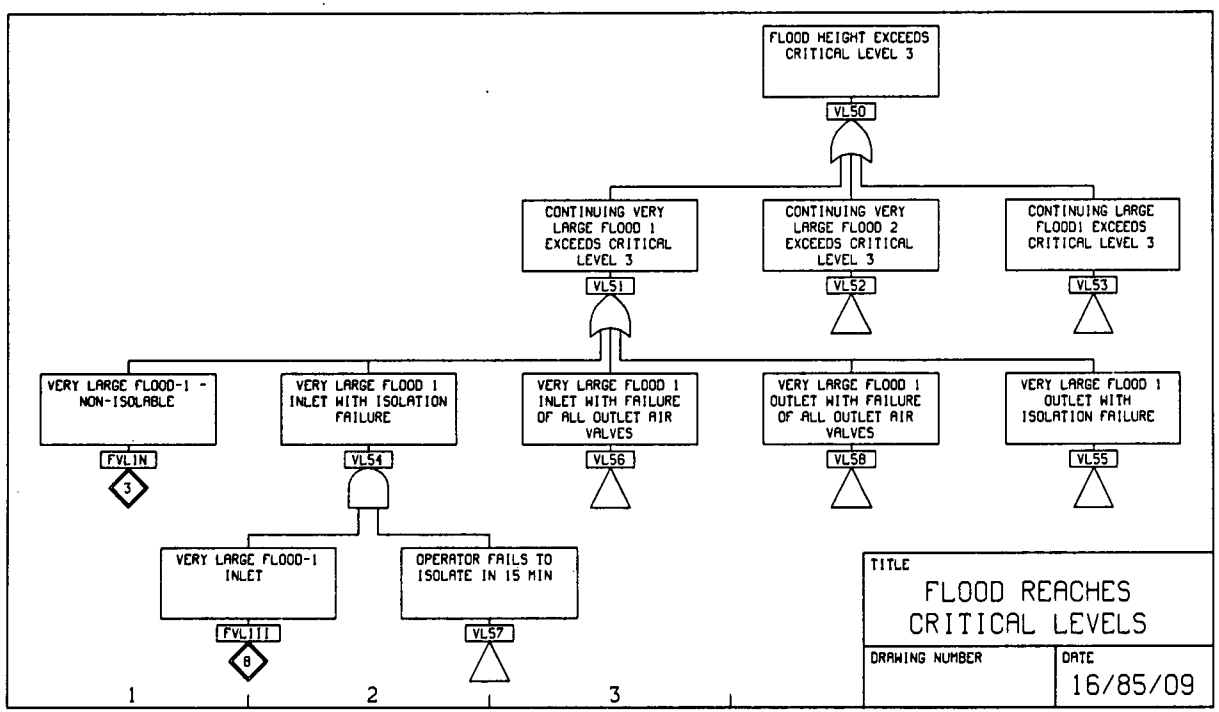
FLOOD HEIGHT EXCEEDS CRITICAL LEVEL 3
VL50
CONTINUING VERY LARGE FLOOD 1 EXCEEDS CRITICAL LEVEL 3
VL51
CONTINUING VERY LARGE FLOOD 2 EXCEEDS CRITICAL LEVEL 3
VL52
CONTINUING LARGE FLOOD1 EXCEEDS CRITICAL LEVEL 3
VL53
VERY LARGE FLOOD-1 - NON-ISOLABLE
FVL1N
3
VERY LARGE FLOOD 1 INLET WITH ISOLATION FAILURE
VL54
VERY LARGE FLOOD 1 INLET WITH FAILURE OF ALL OUTLET AIR VALVES
VL56
VERY LARGE FLOOD 1 OUTLET WITH FAILURE OF ALL OUTLET AIR VALVES
VL58
VERY LARGE FLOOD 1 OUTLET WITH ISOLATION FAILURE
VL55
VERY LARGE FLOOD-1 INLET
FVL1I1
8
OPERATOR FAILS TO ISOLATE IN 15 MIN
VL57
1
2
3
TITLE
FLOOD REACHES CRITICAL LEVELS
DRAWING NUMBER
DATE
16/85/09

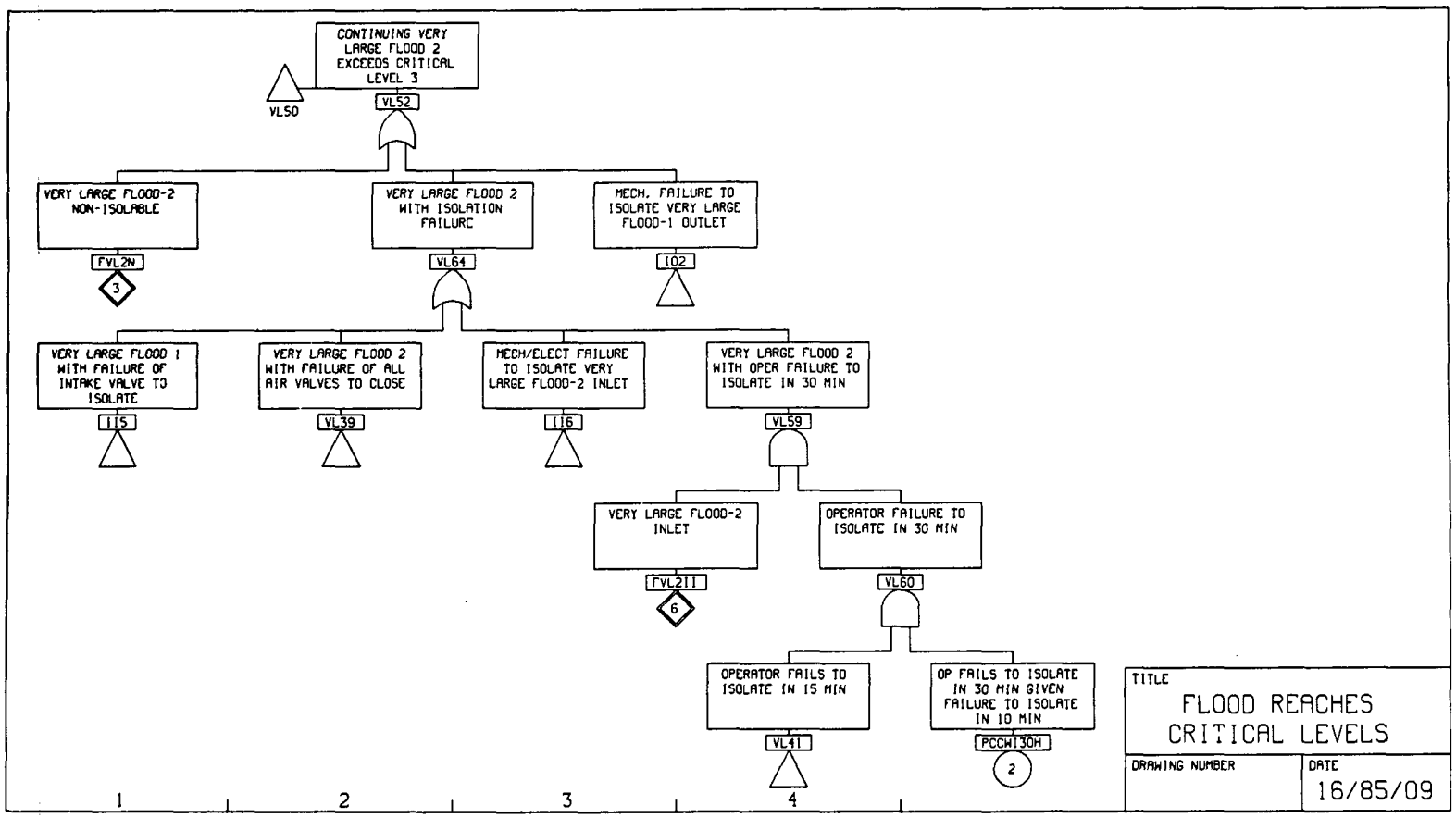
CONTINUING VERY LARGE FLOOD 2 EXCEEDS CRITICAL LEVEL 3
VL52
VL50
VERY LARGE FLOOD-2 NON-ISOLABLE
FVL2N
3
VERY LARGE FLOOD 2 WITH ISOLATION FAILURE
VL64
MECH. FAILURE TO ISOLATE VERY LARGE FLOOD-1 OUTLET
I02
VERY LARGE FLOOD 1 WITH FAILURE OF INTAKE VALVE TO ISOLATE
I15
VERY LARGE FLOOD 2 WITH FAILURE OF ALL AIR VALVES TO CLOSE
VL39
MECH/ELECT FAILURE TO ISOLATE VERY LARGE FLOOD-2 INLET
I16
VERY LARGE FLOOD 2 WITH OPER FAILURE TO ISOLATE IN 30 MIN
VL59
VERY LARGE FLOOD-2 INLET
FVL2I1
6
OPERATOR FAILURE TO ISOLATE IN 30 MIN
VL60
OPERATOR FAILS TO ISOLATE IN 15 MIN
VL41
OP FAILS TO ISOLATE IN 30 MIN GIVEN FAILURE TO ISOLATE IN 10 MIN
PCCWI30H
2
1
2
3
4
TITLE
FLOOD REACHES CRITICAL LEVELS
DRAWING NUMBER
DATE
16/85/09

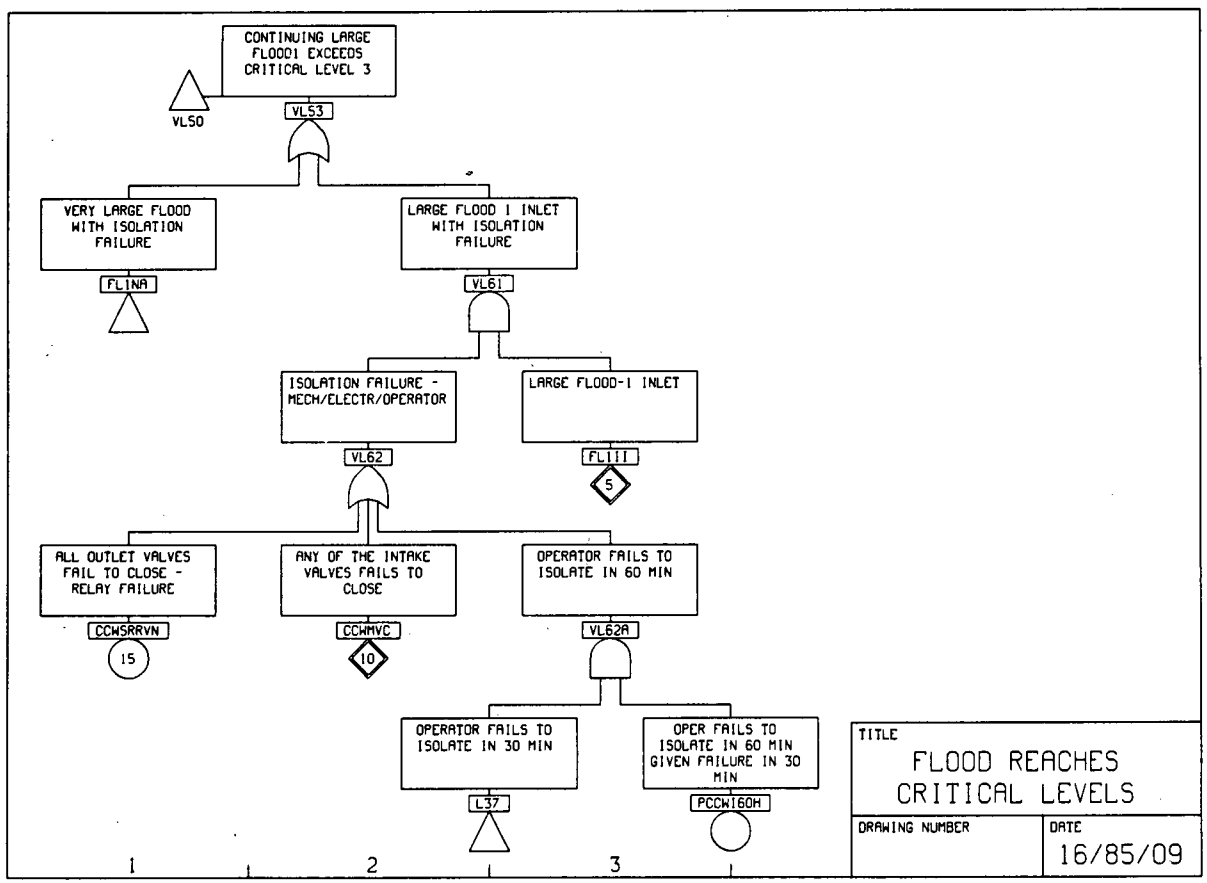
CONTINUING LARGE FLOOD1 EXCEEDS CRITICAL LEVEL 3
VL50
VL53
VERY LARGE FLOOD WITH ISOLATION FAILURE
FL1NA
LARGE FLOOD 1 INLET WITH ISOLATION FAILURE
VL61
ISOLATION FAILURE - MECH/ELECTR/OPERATOR
VL62
LARGE FLOOD-1 INLET
FL1II
5
ALL OUTLET VALVES FAIL TO CLOSE - RELAY FAILURE
CCWSRRVN
15
ANY OF THE INTAKE VALVES FAILS TO CLOSE
CCWMVC
10
OPERATOR FAILS TO ISOLATE IN 60 MIN
VL62A
OPERATOR FAILS TO ISOLATE IN 30 MIN
L37
OPER FAILS TO ISOLATE IN 60 MIN GIVEN FAILURE IN 30 MIN
PCCW160H
1
2
3
TITLE
FLOOD REACHES CRITICAL LEVELS
DRAWING NUMBER
DATE
16/85/09

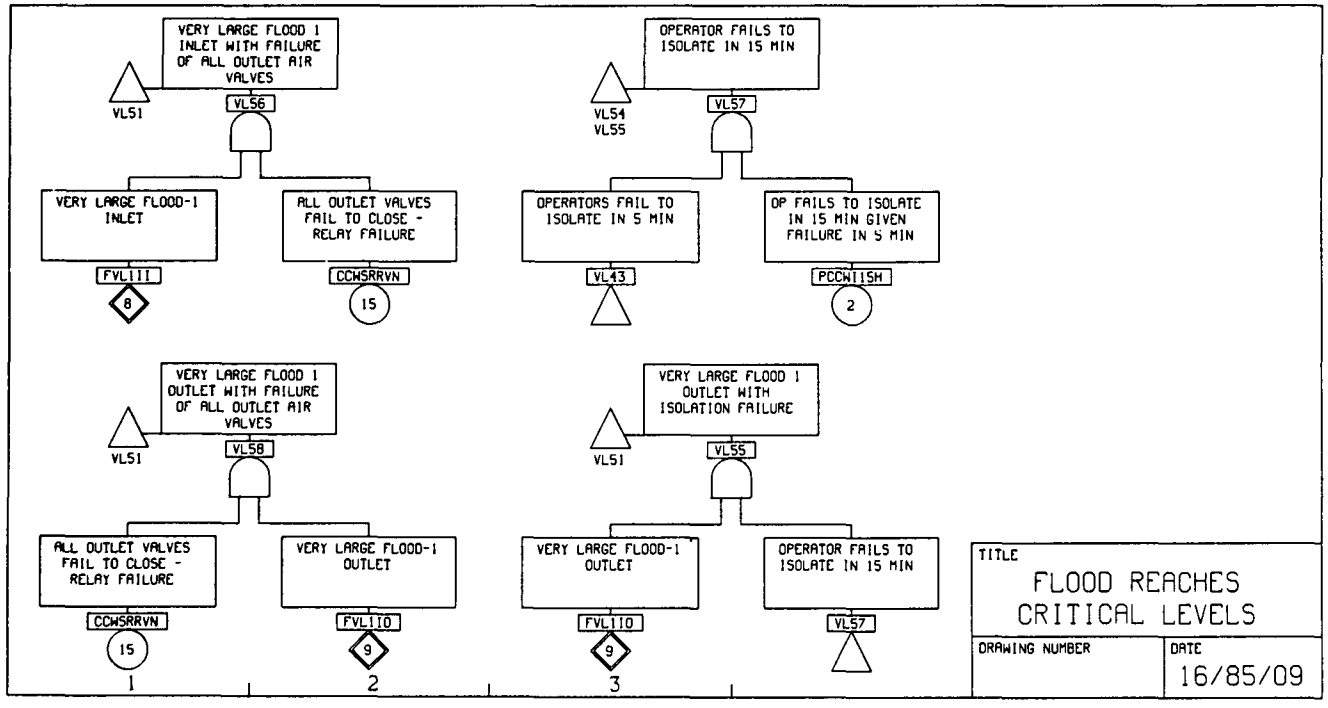
VERY LARGE FLOOD 1 INLET WITH FAILURE OF ALL OUTLET AIR VALVES
VL51
VL56
VERY LARGE FLOOD-1 INLET
FVL111
8
ALL OUTLET VALVES FAIL TO CLOSE - RELAY FAILURE
CCWSRRVN
15
OPERATOR FAILS TO ISOLATE IN 15 MIN
VL54
VL55
VL57
OPERATORS FAIL TO ISOLATE IN 5 MIN
VL43
OP FAILS TO ISOLATE IN 15 MIN GIVEN FAILURE IN 5 MIN
PCCW11SH
2
VERY LARGE FLOOD 1 OUTLET WITH FAILURE OF ALL OUTLET AIR VALVES
VL51
VL58
ALL OUTLET VALVES FAIL TO CLOSE - RELAY FAILURE
CCWSRRVN
15
1
VERY LARGE FLOOD-1 OUTLET
FVL110
9
2
VERY LARGE FLOOD 1 OUTLET WITH ISOLATION FAILURE
VL51
VL55
VERY LARGE FLOOD-1 OUTLET
FVL110
9
3
OPERATOR FAILS TO ISOLATE IN 15 MIN
VL57
TITLE
FLOOD REACHES CRITICAL LEVELS
DRAWING NUMBER
DATE
16/85/09

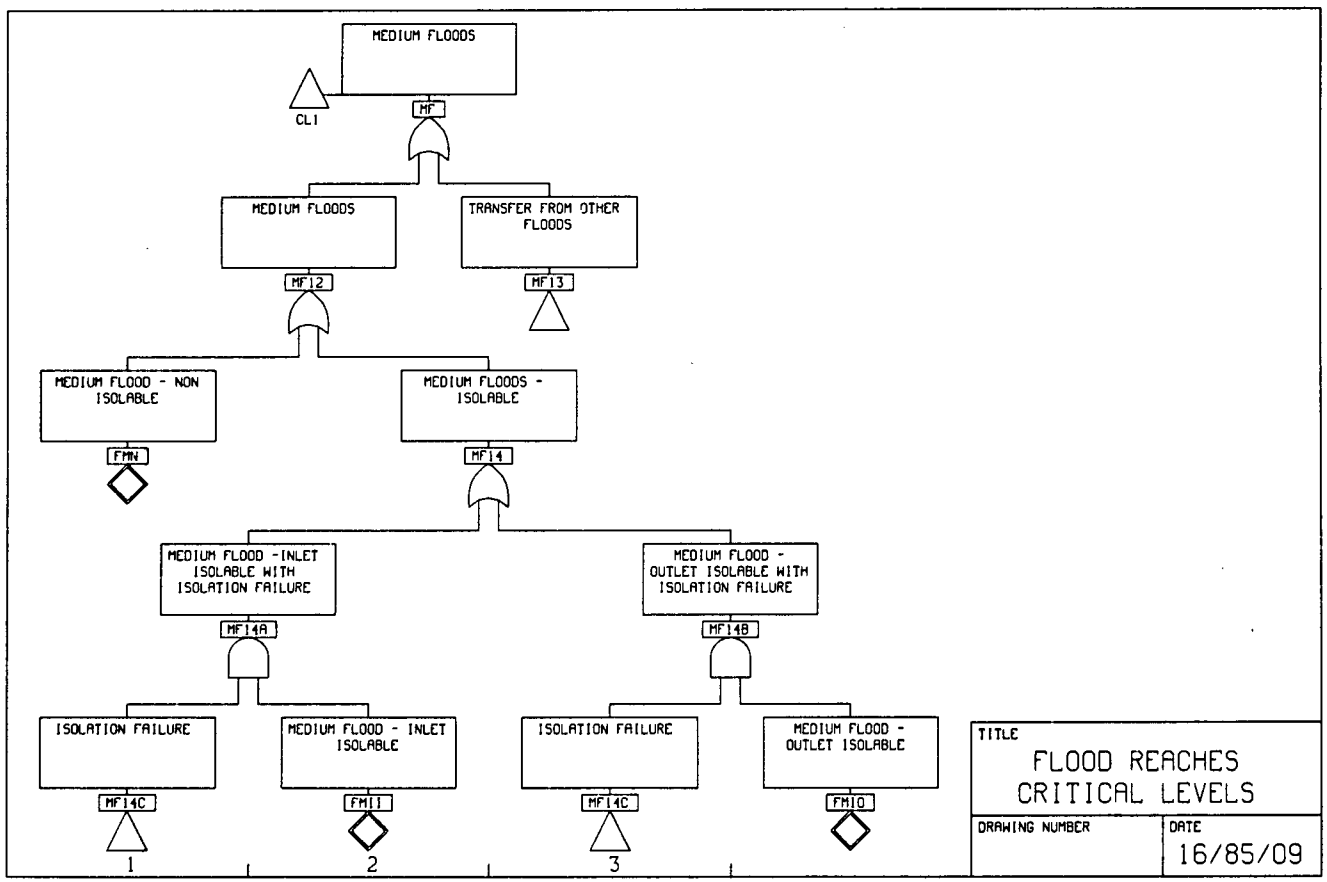
MEDIUM FLOODS
CL1
MF
MEDIUM FLOODS
TRANSFER FROM OTHER FLOODS
MF12
MF13
MEDIUM FLOOD - NON ISOLABLE
MEDIUM FLOODS - ISOLABLE
FMN
MF14
MEDIUM FLOOD -INLET ISOLABLE WITH ISOLATION FAILURE
MEDIUM FLOOD - OUTLET ISOLABLE WITH ISOLATION FAILURE
MF14A
MF14B
ISOLATION FAILURE
MEDIUM FLOOD - INLET ISOLABLE
ISOLATION FAILURE
MEDIUM FLOOD - OUTLET ISOLABLE
MF14C
FM11
MF14C
FM10
1
2
3
TITLE
FLOOD REACHES CRITICAL LEVELS
DRAWING NUMBER
DATE
16/85/09

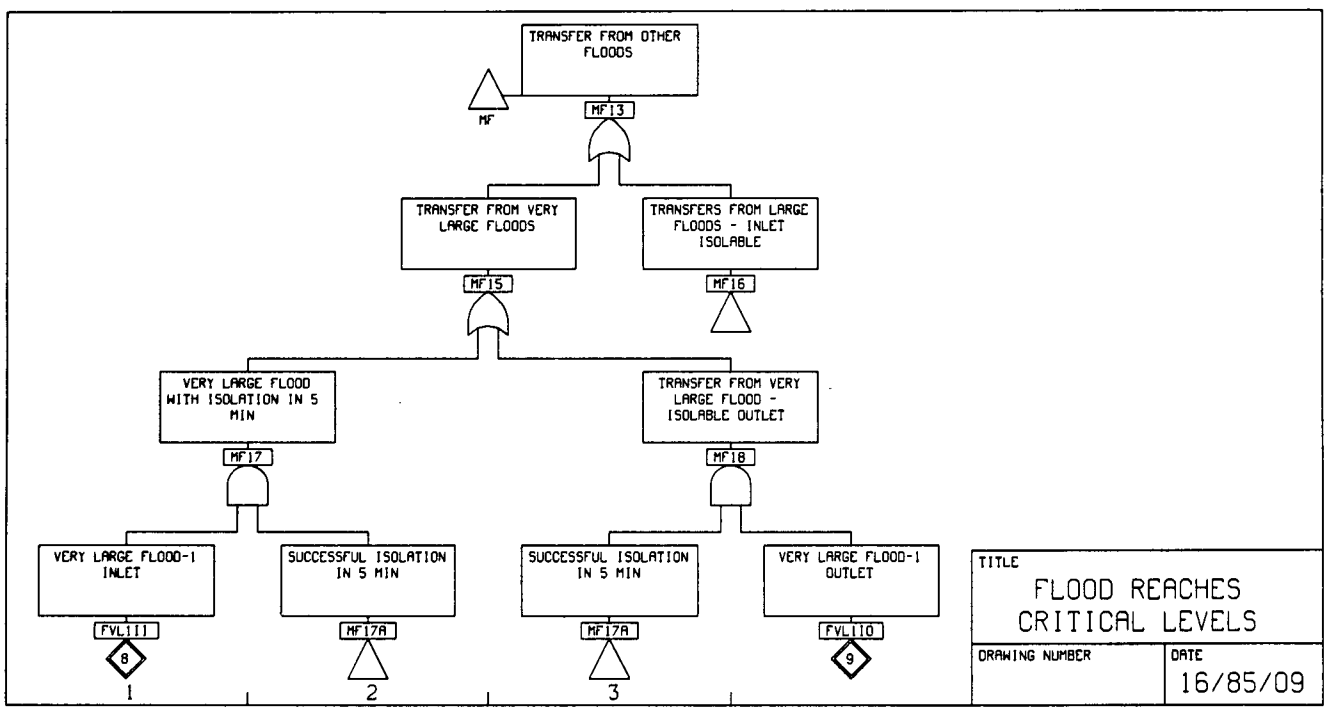
TRANSFER FROM OTHER FLOODS
MF
MF13
TRANSFER FROM VERY LARGE FLOODS
TRANSFERS FROM LARGE FLOODS - INLET ISOLABLE
MF15
MF16
VERY LARGE FLOOD WITH ISOLATION IN 5 MIN
TRANSFER FROM VERY LARGE FLOOD - ISOLABLE OUTLET
MF17
MF18
VERY LARGE FLOOD-1 INLET
SUCCESSFUL ISOLATION IN 5 MIN
SUCCESSFUL ISOLATION IN 5 MIN
VERY LARGE FLOOD-1 OUTLET
FVL111
MF17A
MF17A
FVL110
8
9
1
2
3
TITLE
FLOOD REACHES CRITICAL LEVELS
DRAWING NUMBER
DATE
16/85/09

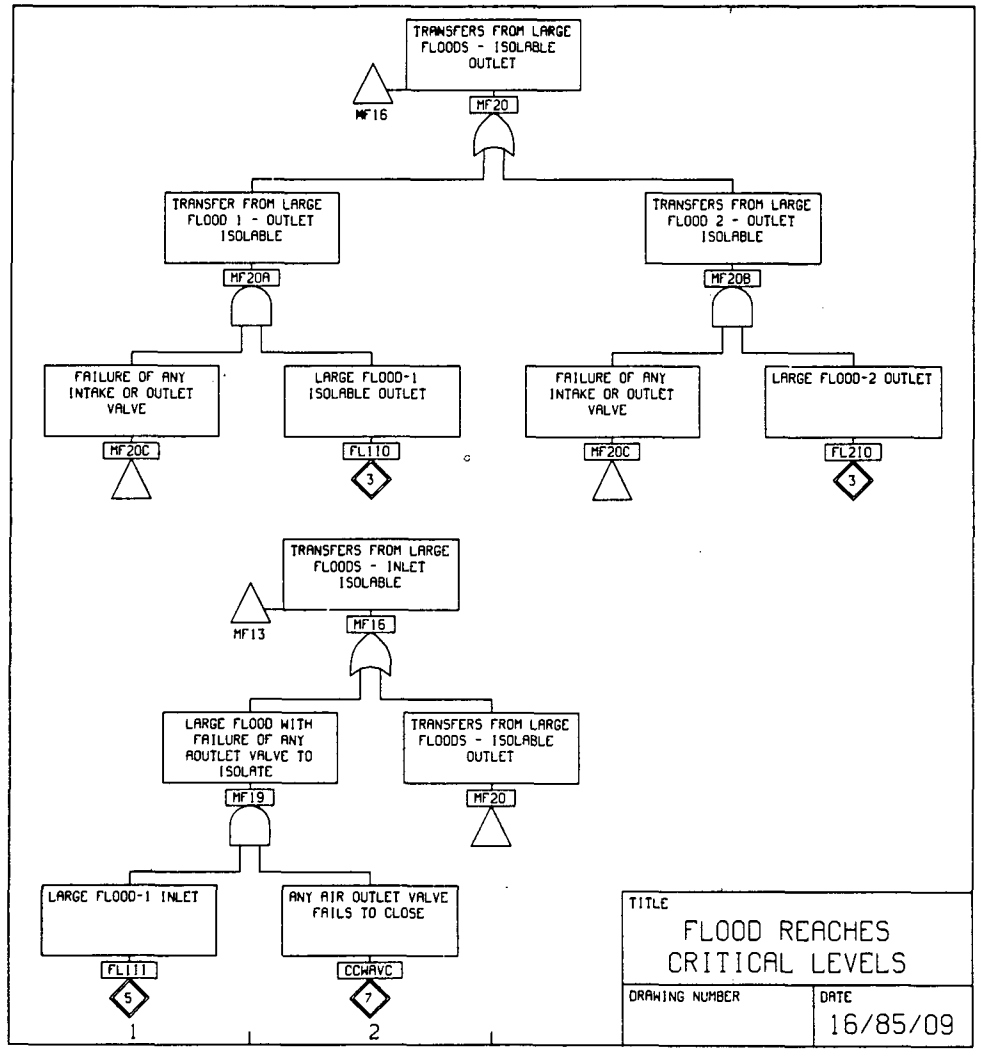
TRANSFERS FROM LARGE FLOODS - ISOLABLE OUTLET
MF16
MF20
TRANSFER FROM LARGE FLOOD 1 - OUTLET ISOLABLE
MF20A
TRANSFERS FROM LARGE FLOOD 2 - OUTLET ISOLABLE
MF20B
FAILURE OF ANY INTAKE OR OUTLET VALVE
MF20C
LARGE FLOOD-1 ISOLABLE OUTLET
FL110
3
FAILURE OF ANY INTAKE OR OUTLET VALVE
MF20C
LARGE FLOOD-2 OUTLET
FL210
3
TRANSFERS FROM LARGE FLOODS - INLET ISOLABLE
MF13
MF16
LARGE FLOOD WITH FAILURE OF ANY AOUTLET VALVE TO ISOLATE
MF19
TRANSFERS FROM LARGE FLOODS - ISOLABLE OUTLET
MF20
LARGE FLOOD-1 INLET
FL111
5
1
ANY AIR OUTLET VALVE FAILS TO CLOSE
CCWAVC
7
2
TITLE
FLOOD REACHES CRITICAL LEVELS
DRAWING NUMBER
DATE
16/85/09

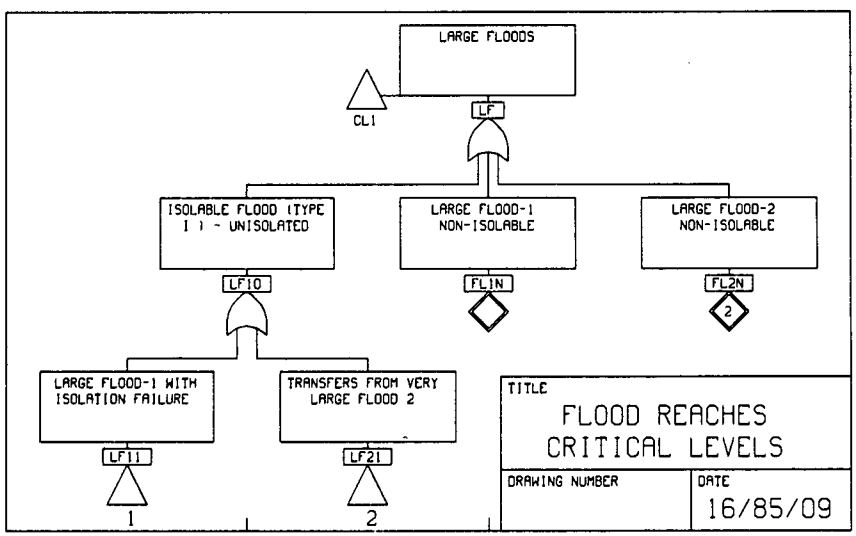
LARGE FLOODS
CL1
LF
ISOLABLE FLOOD (TYPE I) - UNISOLATED
LARGE FLOOD-1 NON-ISOLABLE
LARGE FLOOD-2 NON-ISOLABLE
LF10
FL1N
FL2N
2
LARGE FLOOD-1 WITH ISOLATION FAILURE
TRANSFERS FROM VERY LARGE FLOOD 2
LF11
LF21
1
2
TITLE
FLOOD REACHES CRITICAL LEVELS
DRAWING NUMBER
DATE
16/85/09

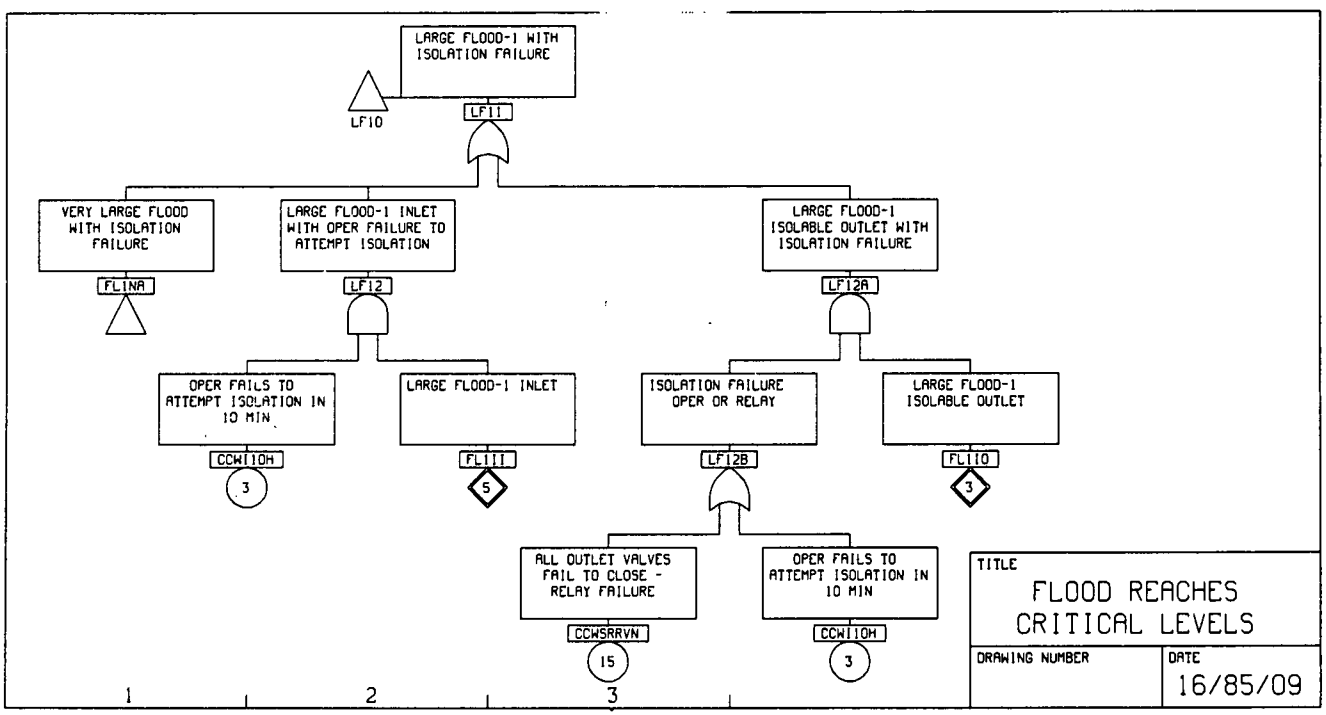
LARGE FLOOD-1 WITH ISOLATION FAILURE
LF10
LF11
VERY LARGE FLOOD WITH ISOLATION FAILURE
FL1NA
LARGE FLOOD-1 INLET WITH OPER FAILURE TO ATTEMPT ISOLATION
LF12
LARGE FLOOD-1 ISOLABLE OUTLET WITH ISOLATION FAILURE
LF12A
OPER FAILS TO ATTEMPT ISOLATION IN 10 MIN
CCW110H
3
LARGE FLOOD-1 INLET
FL111
5
ISOLATION FAILURE OPER OR RELAY
LF12B
LARGE FLOOD-1 ISOLABLE OUTLET
FL110
3
ALL OUTLET VALVES FAIL TO CLOSE - RELAY FAILURE
CCWSRRVN
15
OPER FAILS TO ATTEMPT ISOLATION IN 10 MIN
CCW110H
3
1
2
3
TITLE
FLOOD REACHES CRITICAL LEVELS
DRAWING NUMBER
DATE
16/85/09

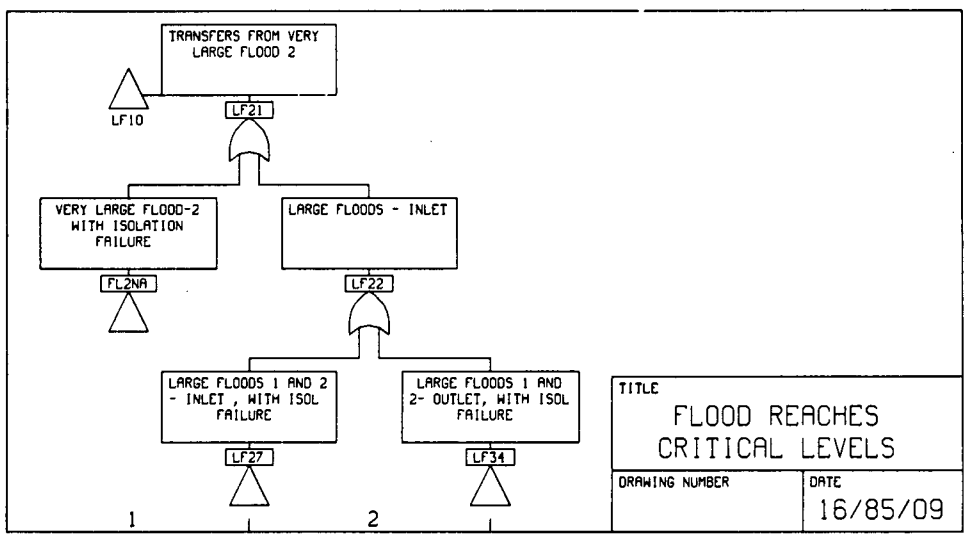
TRANSFERS FROM VERY LARGE FLOOD 2
LF10
LF21
VERY LARGE FLOOD-2 WITH ISOLATION FAILURE
LARGE FLOODS - INLET
FL2NA
LF22
LARGE FLOODS 1 AND 2 - INLET , WITH ISOL FAILURE
LARGE FLOODS 1 AND 2- OUTLET, WITH ISOL FAILURE
LF27
LF34
1
2
TITLE
FLOOD REACHES CRITICAL LEVELS
DRAWING NUMBER
DATE
16/85/09

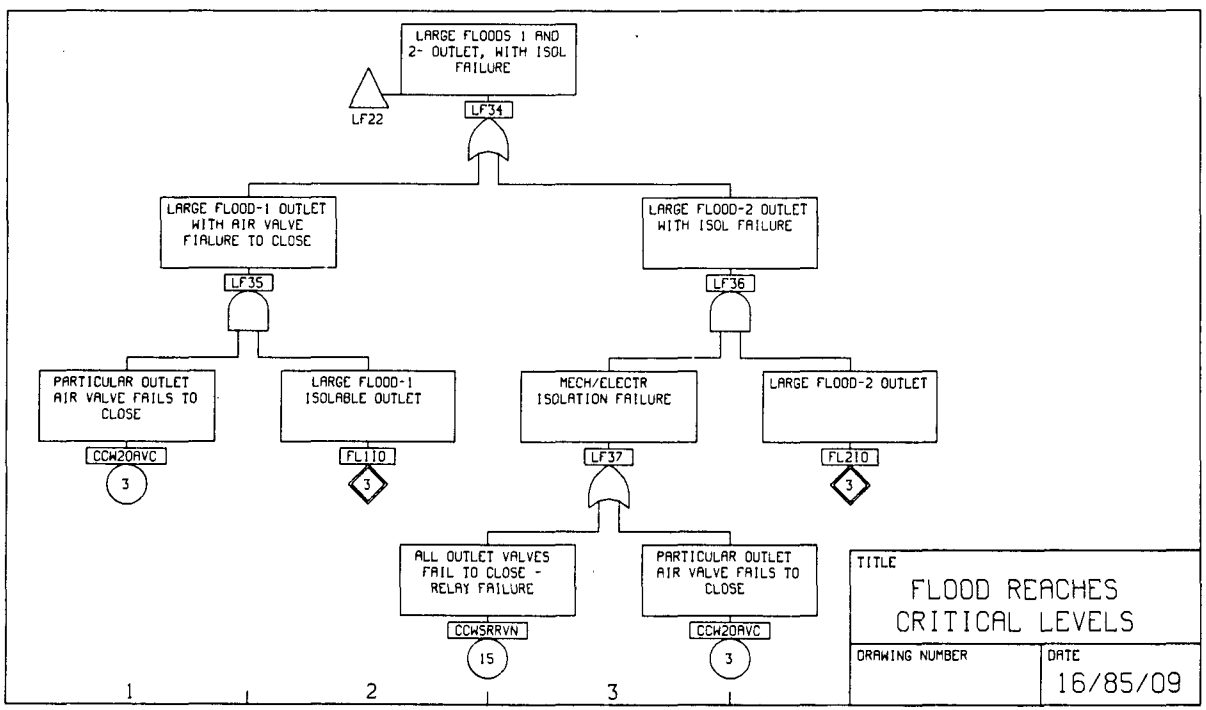
LARGE FLOODS 1 AND 2- OUTLET, WITH ISOL FAILURE
LF22
LF34
LARGE FLOOD-1 OUTLET WITH AIR VALVE FIALURE TO CLOSE
LF35
LARGE FLOOD-2 OUTLET WITH ISOL FAILURE
LF36
PARTICULAR OUTLET AIR VALVE FAILS TO CLOSE
CCW20AVC
3
LARGE FLOOD-1 ISOLABLE OUTLET
FL110
3
MECH/ELECTR ISOLATION FAILURE
LF37
LARGE FLOOD-2 OUTLET
FL210
3
ALL OUTLET VALVES FAIL TO CLOSE - RELAY FAILURE
CCWSRRVN
15
PARTICULAR OUTLET AIR VALVE FAILS TO CLOSE
CCW20AVC
3
1
2
3
TITLE
FLOOD REACHES CRITICAL LEVELS
DRAWING NUMBER
DATE
16/85/09

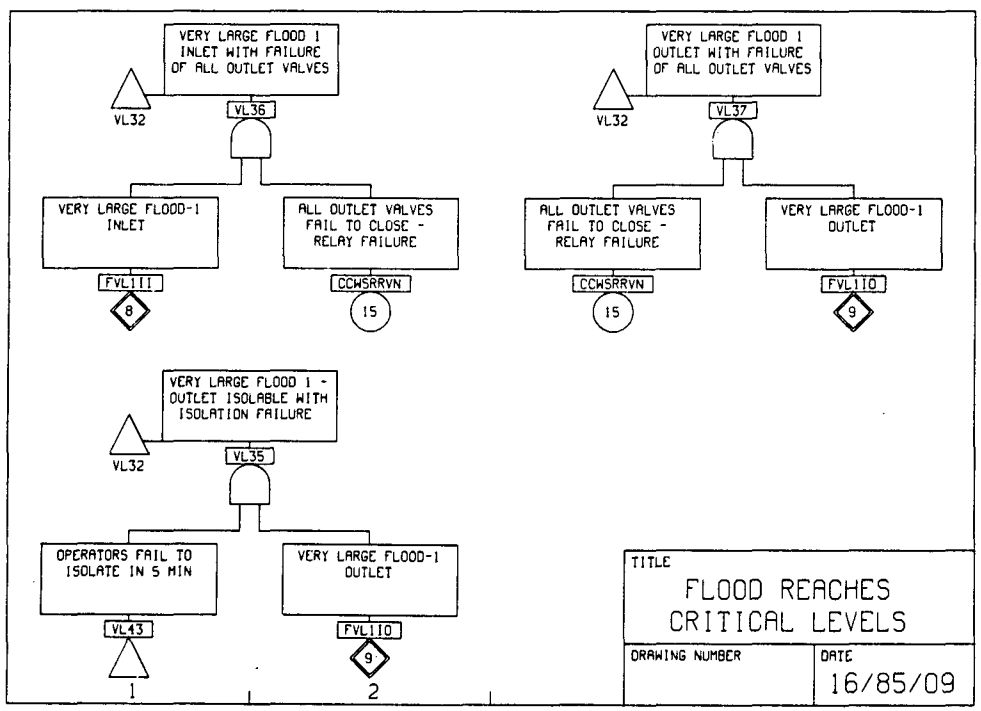
VERY LARGE FLOOD 1 INLET WITH FAILURE OF ALL OUTLET VALVES
VL32
VL36
VERY LARGE FLOOD-1 INLET
FVL111
8
ALL OUTLET VALVES FAIL TO CLOSE - RELAY FAILURE
CCWSRRVN
15
VERY LARGE FLOOD 1 OUTLET WITH FAILURE OF ALL OUTLET VALVES
VL32
VL37
ALL OUTLET VALVES FAIL TO CLOSE - RELAY FAILURE
CCWSRRVN
15
VERY LARGE FLOOD-1 OUTLET
FVL110
9
VERY LARGE FLOOD 1 - OUTLET ISOLABLE WITH ISOLATION FAILURE
VL32
VL35
OPERATORS FAIL TO ISOLATE IN 5 MIN
VL43
1
VERY LARGE FLOOD-1 OUTLET
FVL110
9
2
TITLE
FLOOD REACHES CRITICAL LEVELS
DRAWING NUMBER
DATE
16/85/09

APPENDIX D

REVIEW OF SEISMIC GROUND MOTION HAZARD
OCONEE NUCLEAR POWER PLANT SITE
OCONEE, SOUTH CAROLINA

Professor Pradeep Talwani
University of South Carolina
Columbia, South Carolina

GENERAL COMMENTS

I. Seismotectonic Regions and Seismicity Parameters

In the delineation of the seismotectonic zones, and seismicity parameters there were a few serious shortcomings.

a. Lack of documentation

In the report it is stated that they have "....identified seven source areas or "seismotectonic regions" in the eastern United States....". However, no documentation is provided to justify their delineation. No geologic, geophysical or seismicity data were given. This division appears to be based primarily on the known physiographic provinces, except in the case of the 'Charleston epicentral area' and the 'New Madrid faulted zone', where the identification appears to be based on historical seismicity. The seismotectonic regions as given in the report are shown in Figure 1 (Fig. 2-1 of the report), and we note a broad agreement with the generally accepted physiographic provinces shown in Fig. 2 (taken from Hatcher, 1978). However, there are some differences and these are discussed in a later section.

b. Source Zones Based on Seismicity

Bollinger (1973, 1975b) reviewed and analyzed the historical seismic data for southeastern United States (SEUS). Based on the historical record of seismicity, he divided SEUS into four seismic zones. Very pertinent to this study is the Southern Appalachian seismic zone (Figures 3 and 4). This

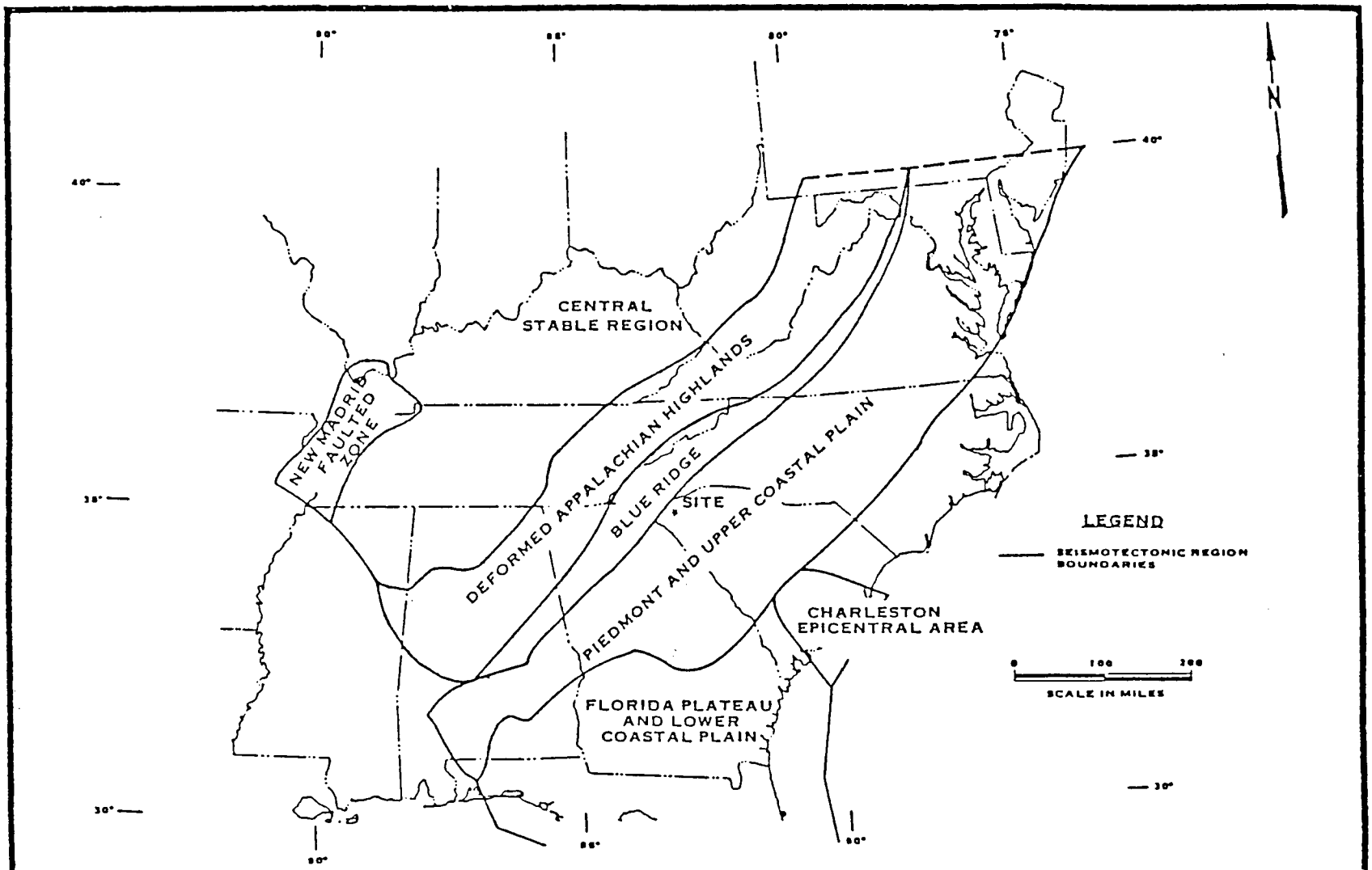

PROBABILISTIC SEISMIC RISK ASSESSMENT OCONEE NUCLEAR STATION	LAW ENGINEERING TESTING COMPANY MARIETTA, GEORGIA	SEISMOTECTONIC REGIONS FOR THE EASTERN UNITED STATES MG0295 FIGURE 1

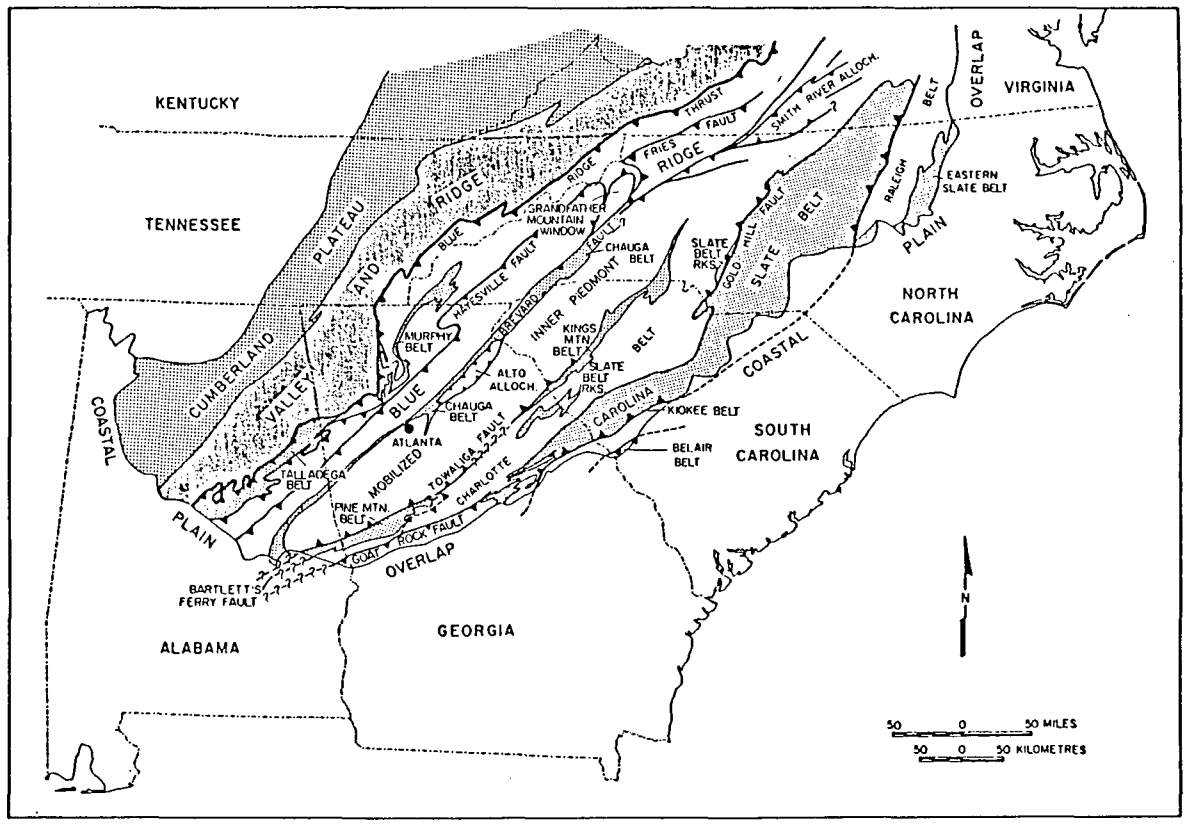

Figure 2 - Map of tectonic subdivisions of southern Appalachians.

From Hatcher, 1978

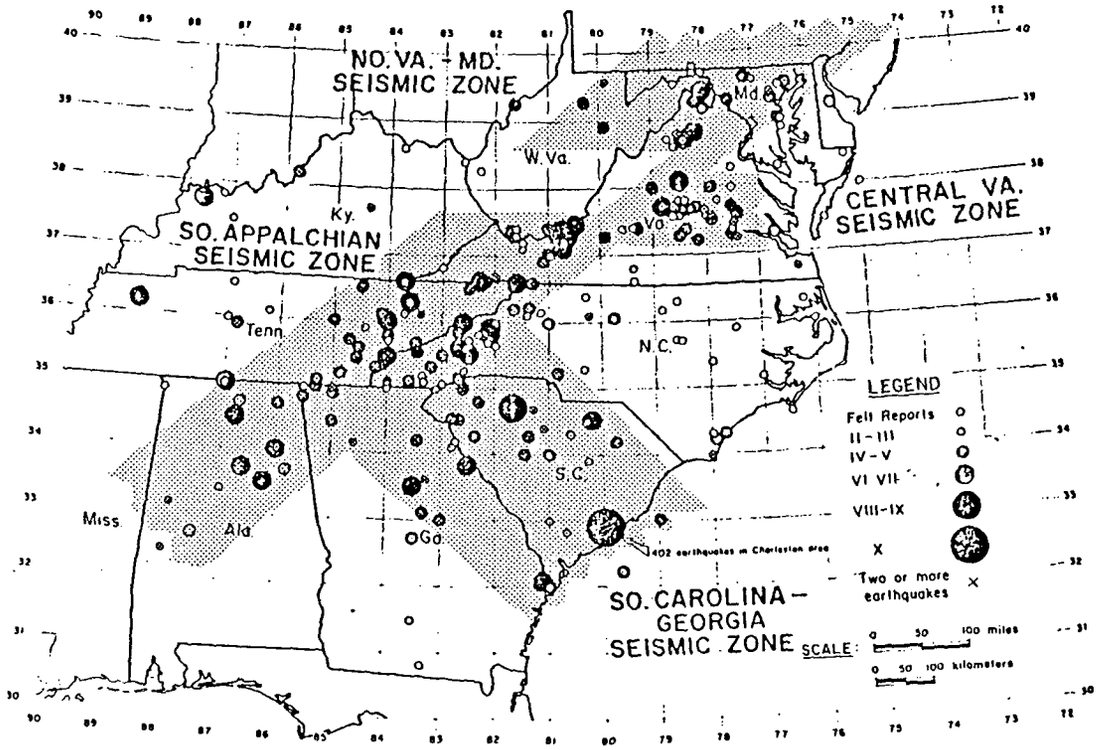

Fig. 3 Southern Appalachian Seismicity, 1754-1970. Definition of seismic zones in the southeastern United States.

From Bollinger, 1975a

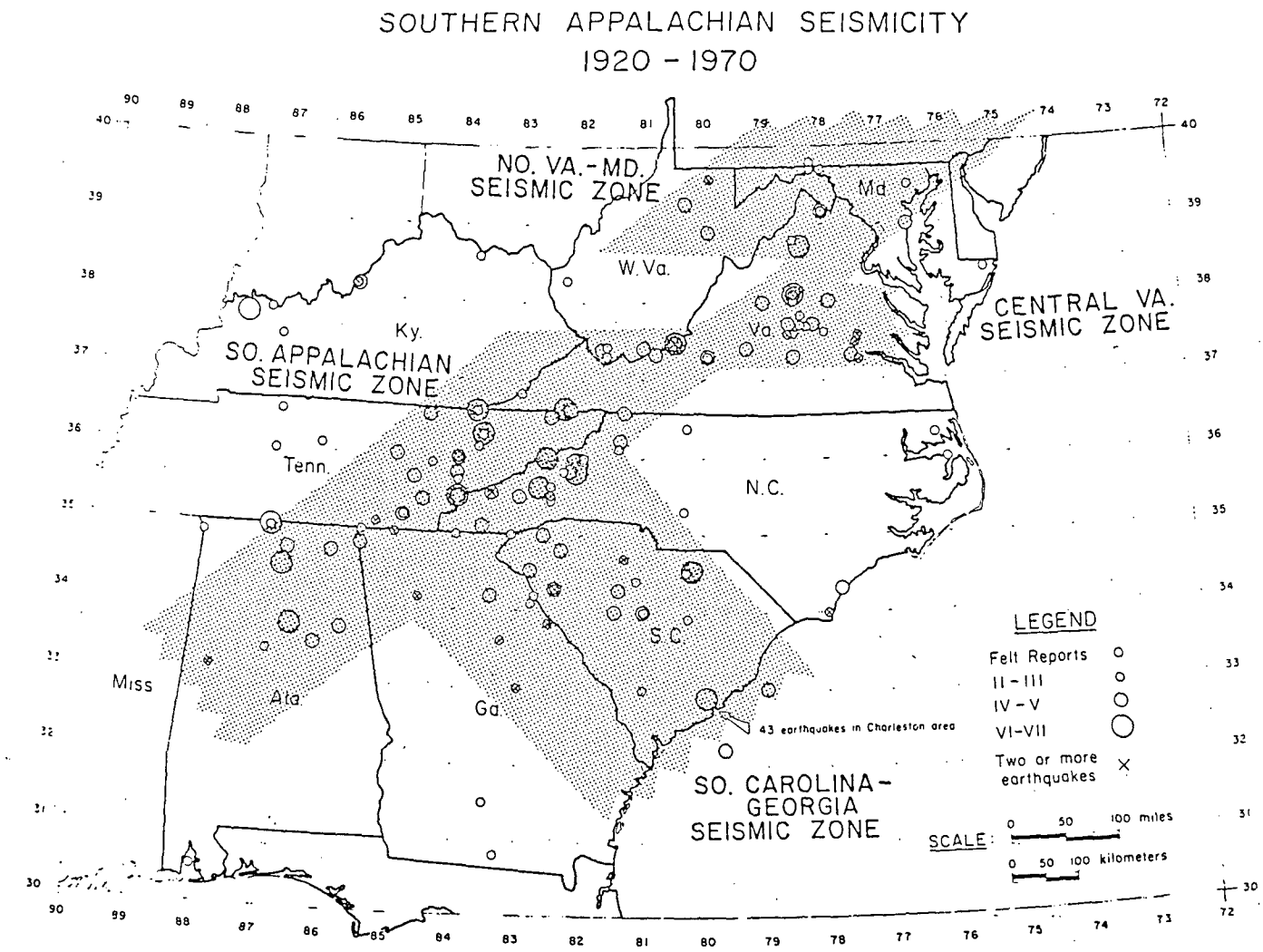

Figure 4 Seismic zones in the southeastern U.S. (Bollinger, 1975b)

zone includes parts of both Blue Ridge and the Valley and Ridge tectonic provinces (the latter is included in Deformed Appalachian highlands in Fig.1). Although the tectonic provinces extend over large distances to the NE and SW (Figures 1 and 2), the historical seismicity is not as widespread. Bollinger (1973) separated the seismicity in southern Appalachians and in northern Virginia and Maryland into different seismic zones.

In my judgement, source zones based on seismicity should have been considered, especially the Southern Appalachian seismic zone. (This is discussed later in Section II.b.)

c. Probabilistic Acceleration Maps

Dr. Algermissen and his group at the U.S. Geological Survey have been studying the seismic hazards in U.S. and have brought out several reports. There are two reports which are particularly pertinent to this study (Algermissen and Perkins, 1976; and Algermissen *et al.*, 1982). The authors divided the United States into various seismic zones based on geologic and seismicity data and then calculated horizontal accelerations in those zones for various exposure times based on some attenuation relationships. Figures 5-7 are taken from their work. The results of the 1976 study should have been incorporated.

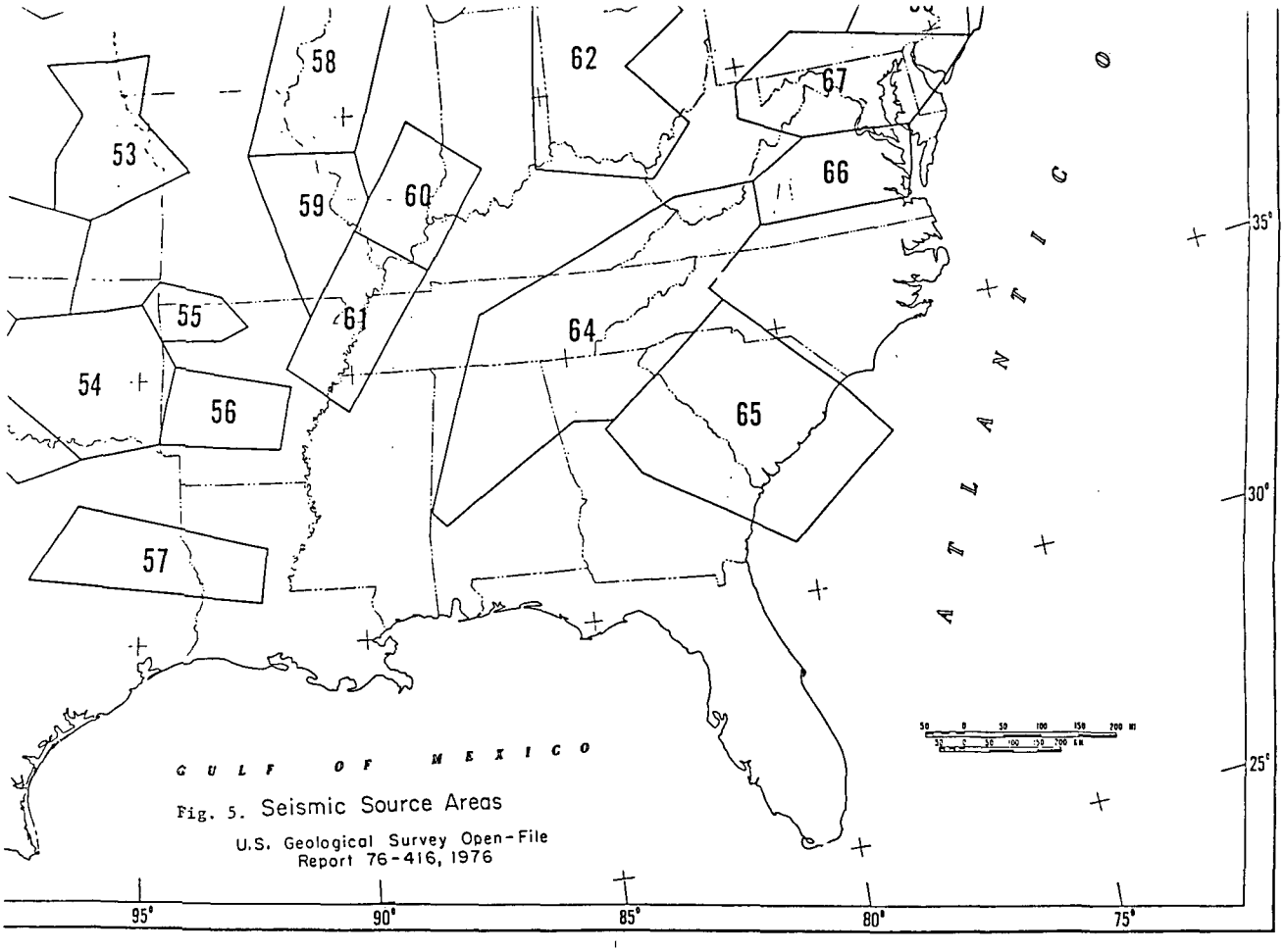

Fig. 5. Seismic Source Areas

U.S. Geological Survey Open-File Report 76-416, 1976

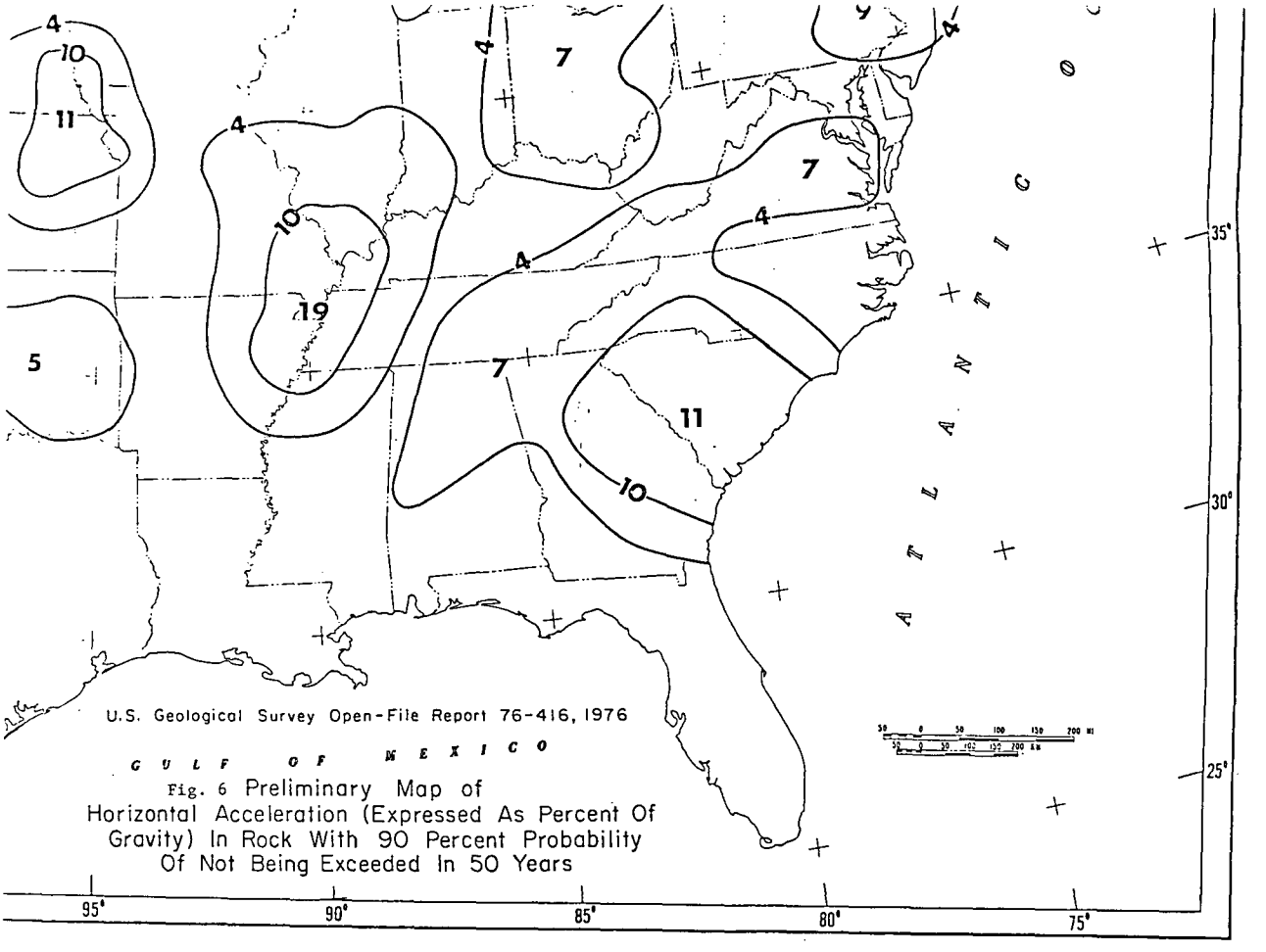

Fig. 6 Preliminary Map of Horizontal Acceleration (Expressed As Percent Of Gravity) In Rock With 90 Percent Probability Of Not Being Exceeded In 50 Years

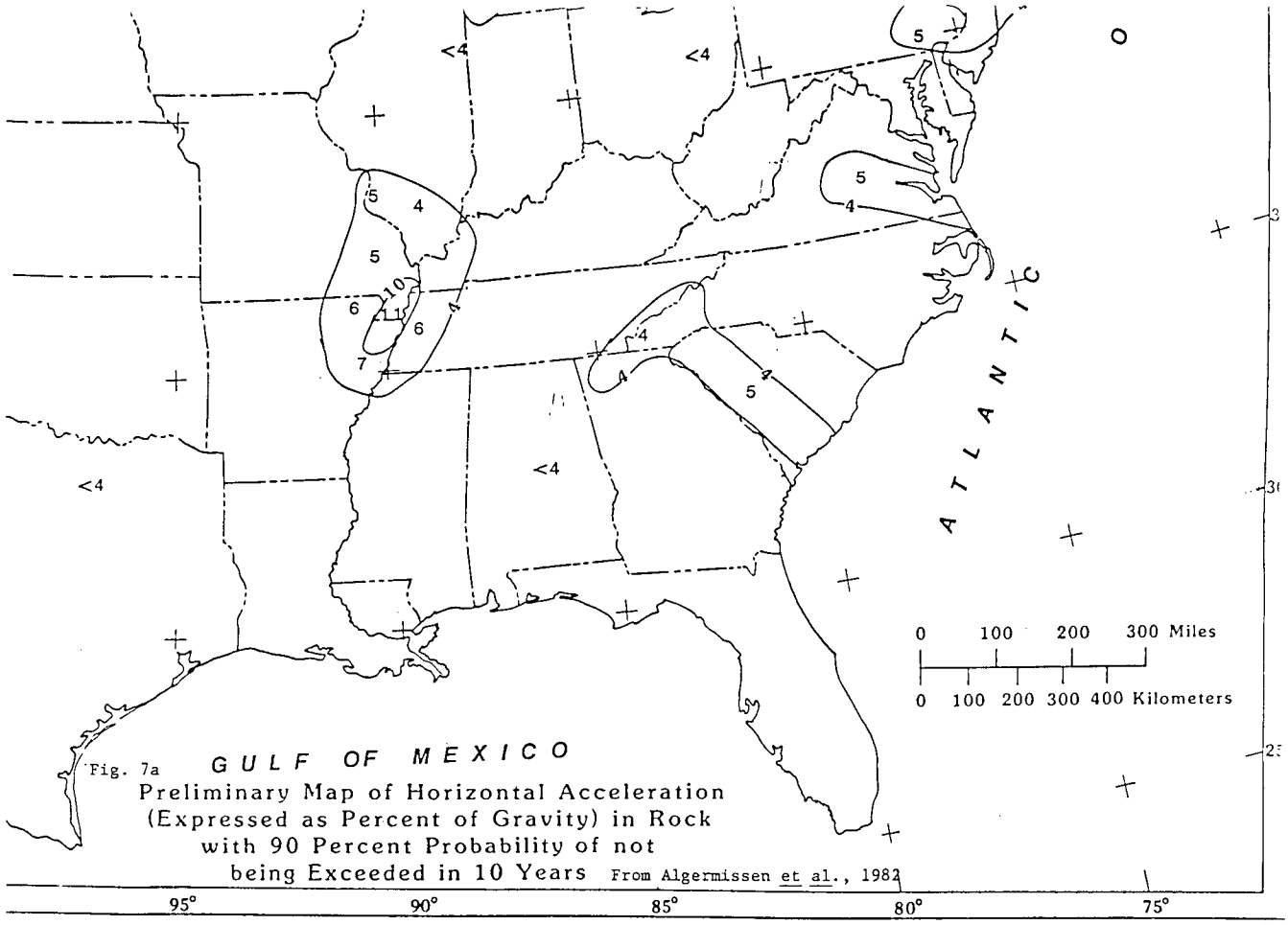

Fig. 7a Preliminary Map of Horizontal Acceleration (Expressed as Percent of Gravity) in Rock with 90 Percent Probability of not being Exceeded in 10 Years From Algermissen et al., 1982

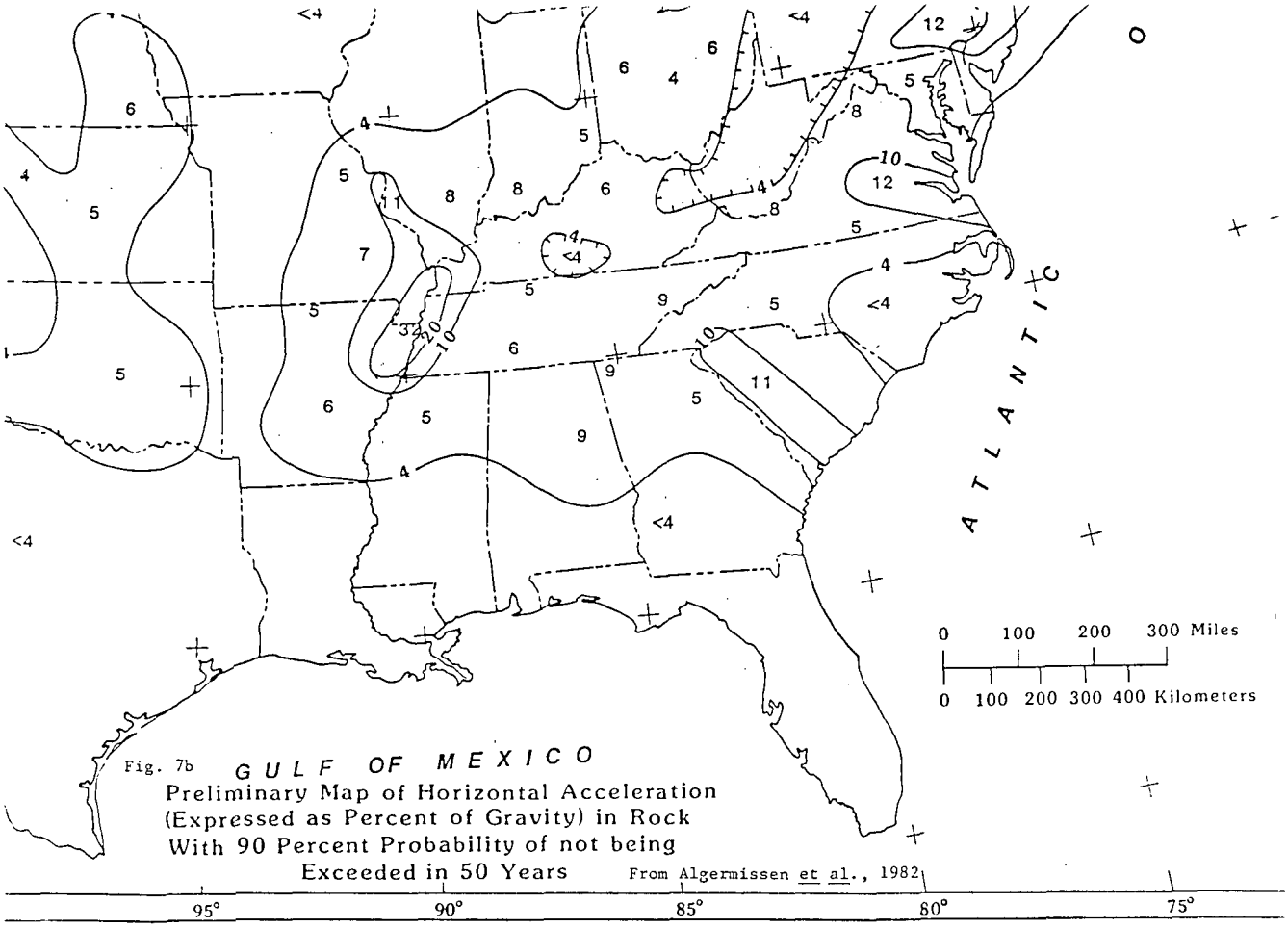

Fig. 7b GULF OF MEXICO
Preliminary Map of Horizontal Acceleration
(Expressed as Percent of Gravity) in Rock
With 90 Percent Probability of not being
Exceeded in 50 Years From Algermissen et al., 1982

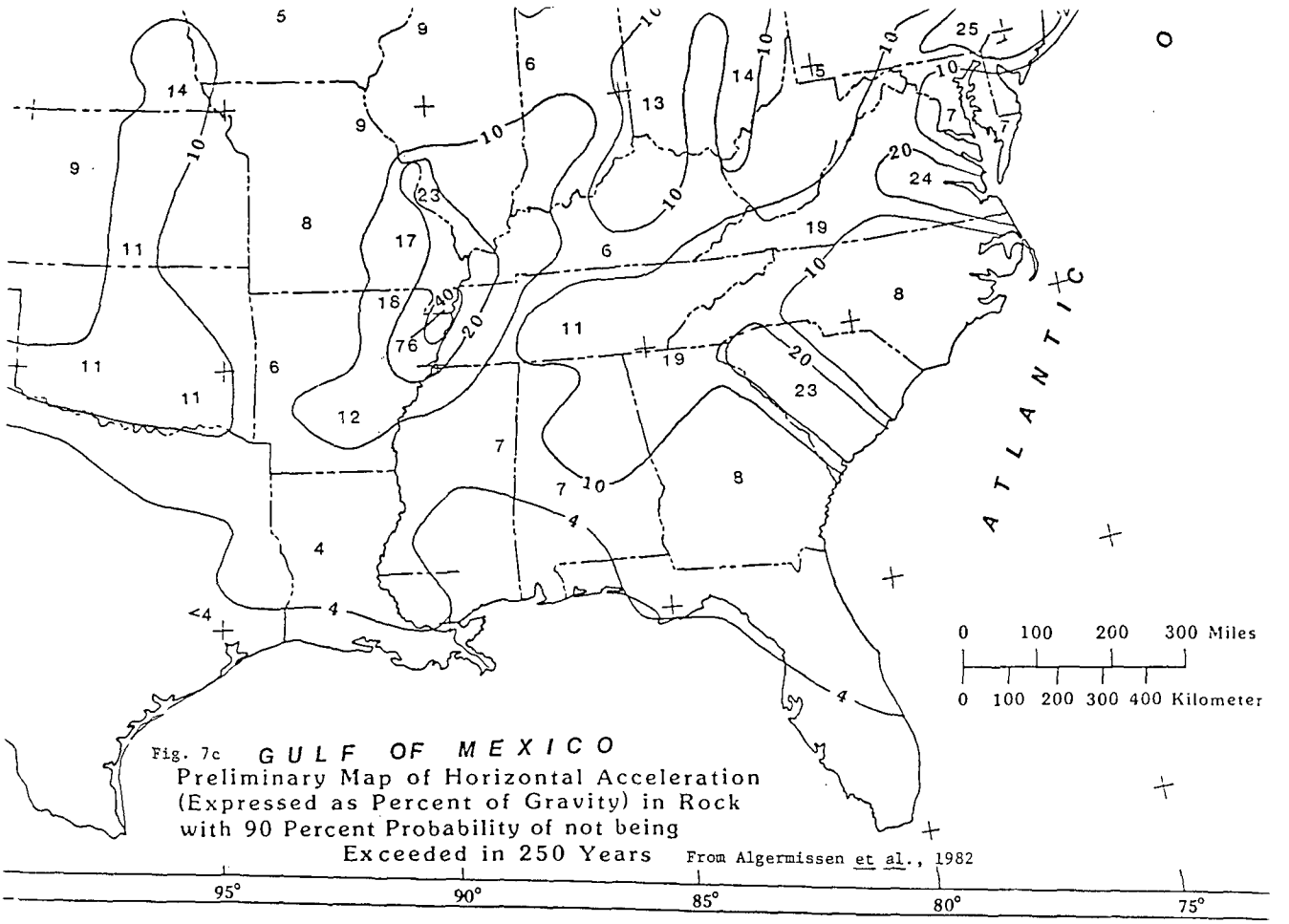

Fig. 7c GULF OF MEXICO
Preliminary Map of Horizontal Acceleration (Expressed as Percent of Gravity) in Rock with 90 Percent Probability of not being Exceeded in 250 Years

From Algermissen et al., 1982

d. Comparison of Different Approaches

For a complete analyses of the seismic hazards, the results of choosing different seismotectonic zones (see a. and b. above) and analyzing by modified Cornell's (1968) method; and the results of Algermissen probabilistic maps and the LLL study should have been compared.

e. Current Literature Not Used

Although the report is dated May 1981, the latest reference to seismicity is Bollinger's (1975a) catalog that lists seismicity to 1974. In the interim, in 1977 the SEUS Seismicity Bulletin began publication, and a magnitude 5+ event occurred in July 1980 in Kentucky. Thus the analyses in the report is not based on up-to-date data at the time the report was prepared. (The data quality and quantity have improved considerably since 1981 with the installation of additional seismographs.)

f. Reservoir Induced Seismicity (RIS)

The Oconee Nuclear Power Plants are located adjacent to Lake Keowee (Figure 8), their source of cooling water. Swarms of microearthquakes occurred at Lake Keowee in Jan.-Feb., 1978 (Talwani et al., 1979), an intensity IV event occurred on Jan. 19, 1979 (Stover et al., 1980). Another intensity IV event occurred in the vicinity of the plant on July 13, 1971 (Sowers and Fogle, 1979). Talwani et al., (1979) suggested that the 1971 event and an earlier event on

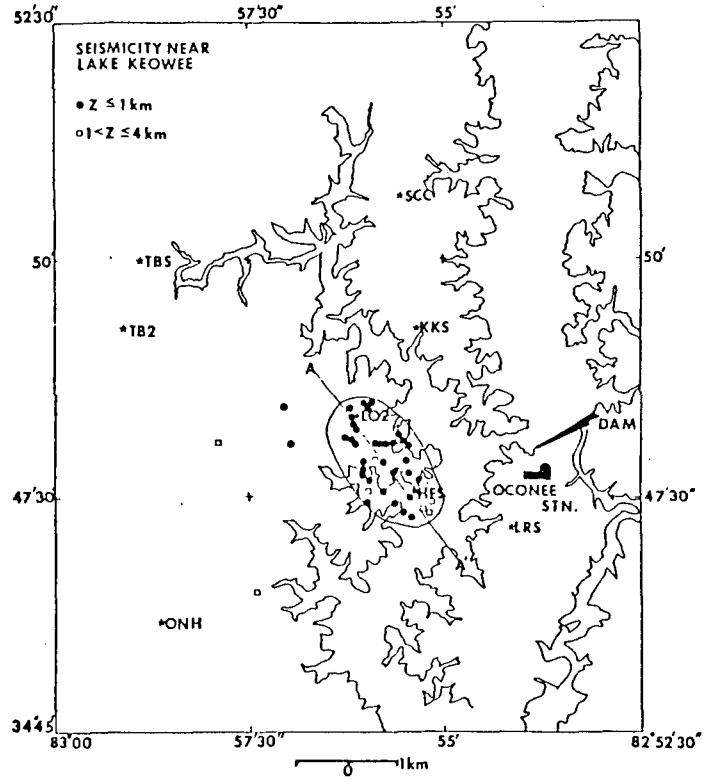

FIG. 8 Location of epicenters near Lake Keowee for the period December 30, 1977 to January 16, 1978. The activity lies near the Oconee nuclear station, and trends NW-SE. Seismograph sites are shown by stars while the shallow earthquakes ($Z \leqq 1$ km) are shown by solid circles.

From Talwani et al., 1979

December 13, 1969 may have been associated with the filling of Lake Keowee.

At Lake Jocassee (Figure 9), located upstream of Lake Keowee a M_{bLg} 3.7 event occurred in August 1979, nearly six years after impoundment. This shallow event (depth 2-3 km) was associated with intensity VI in the epicentral area (Taylor and Talwani, 1979). Although Lake Keowee had been filled several years prior to the construction of the Oconee plant, the possibility of RIS should perhaps have been considered. Typically in the Piedmont, RIS is shallow and associated with large ground accelerations.

DETAILED REVIEWS

II. Seismotectonic Zones

a. Section 2.1.1 Piedmont and the Upper Coastal Plain

I am in basic agreement with the delineation of this seismotectonic zone. The northwest boundary is along the Brevard zone (Figure 2). The southeast boundary of this zone lies in the Atlantic Coastal Plain. This boundary in portions of Georgia and South Carolina has a general spatial association with a change in character of the aeromagnetic anomalies, and has been interpreted as a terrane boundary by various authors (Popenoe and Zietz, 1977; Williams and Hatcher, 1982, 1983; and Higgins and Zietz, 1983).

However, as noted in comments Ia and Ie above, no data are provided and the references are out of date. This

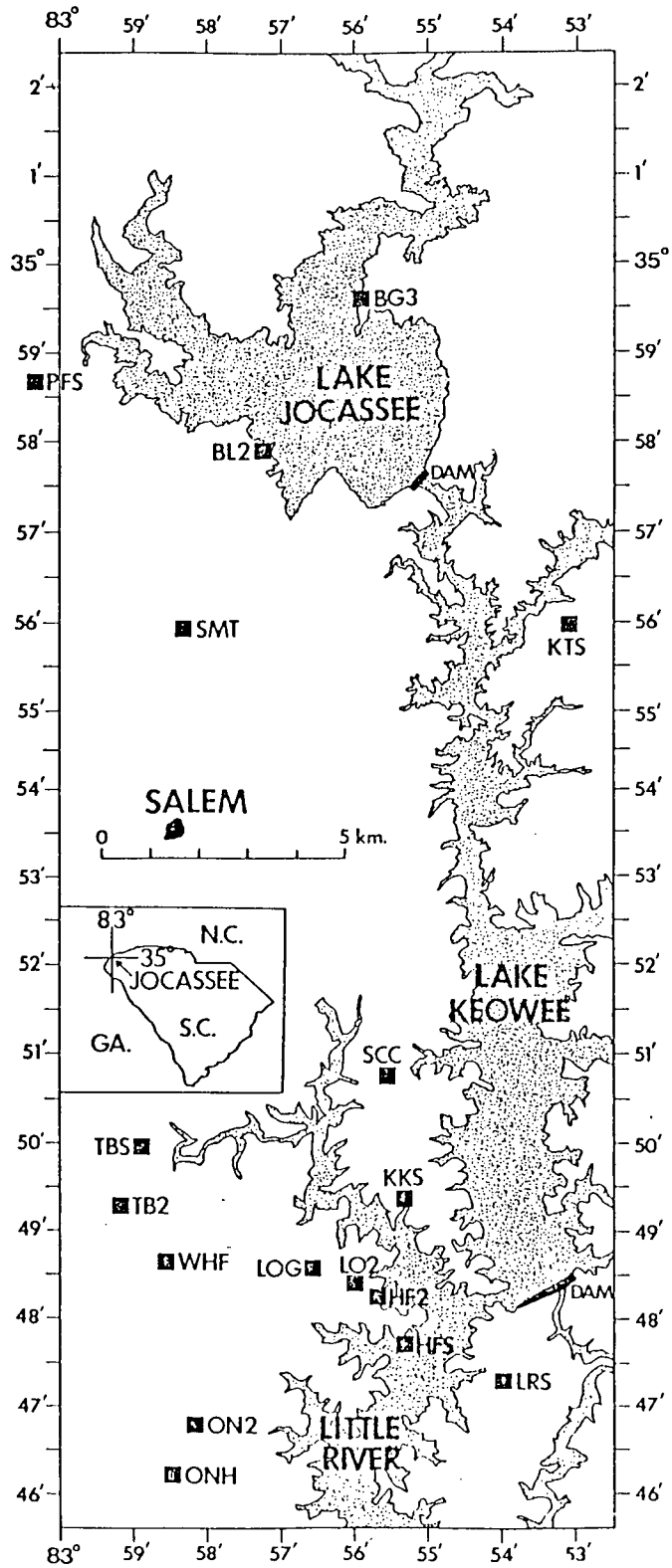

FIG. 9 Locations occupied by seismograph stations of the Lake Keowee and Lake Jocassee networks are shown by solid squares.

From Talwani et al., 1979.

zone includes the Central Virginia seismic zone of Bollinger (1973) - the location of the highest seismicity in this seismotectonic zone (Bollinger and Sibol, 1985). It should perhaps have been mentioned. The Union County, S.C. earthquake of 1913 was assigned an intensity VIII (R.F.) by Taber (1913), and VII to VIII (M.M.) by Bollinger (1975a) rather than the value of VII used. This event was located some 70 miles Southeast of the Oconee site and not northeast as stated in the report.

b. Sections 2.1.2 and 2.1.4. Blue Ridge and Deformed Appalachian Highlands.

The Blue Ridge seismotectonic zone (Section 2.1.2.) incorporates the Blue Ridge physiographic province (Figures 1 and 2) whereas the Deformed Appalachian Highland zone (Section 2.1.4.) incorporates the Valley and Ridge physiographic province and the eastern portion of the Cumberland plateau (Figures 1 and 2). Both these zones trend northeast along the Appalachians from Alabama to Maryland. However, the historical seismicity (Figures 3 and 4) (Bollinger, 1975a,b) and the current seismicity (Figure 10) (SEUSSN Contributors, 1985) is not so continuous. In both cases, the seismicity is dominated by the Southern Appalachian seismic zone. (SEUSSN Contributors, 1985; Johnston et al, 1985). Clearly this zone is the most active in the region. There were six events with magnitudes $\geq$ 4.0 between November 1928 and June 1981 (Johnston et al, 1985) including the magnitude 4.6 East Tennessee

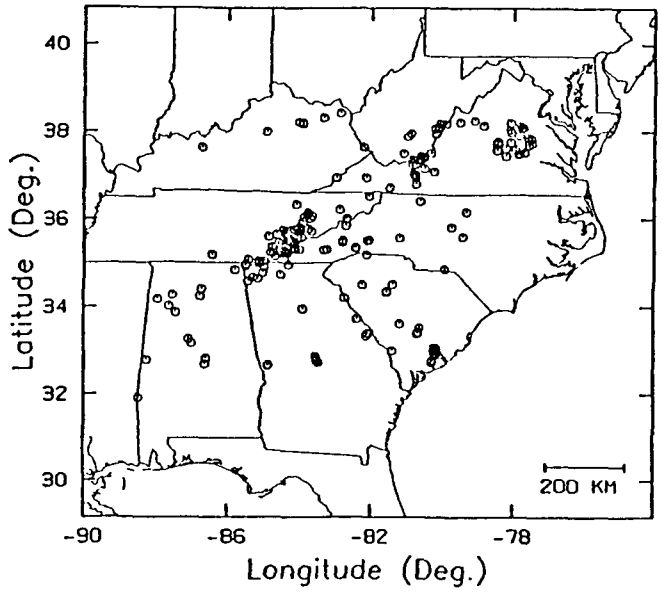

FIG. 10 Seismicity of the southeastern United States (July 1977–June 1983); earthquake ($M \geqq 0$) epicenters shown by open circles [southeastern United States seismicity (July 1977–June 1983); tectonic events only].

From SEUSSN Contributors, 1985

earthquake in November 1973 (Bollinger *et al.*, 1976). In the same period (10/1928 to 6/1981) there were 19 events between magnitude 3 and 4. After the installment of a local seismographic network there, Johnston *et al.*, (1985) report an additional 10 events with magnitudes $\geq$ 3.0 between 9/1981 and 12/1983. Further, like the seismicity in Giles County, Va., (Bollinger and Wheeler, 1983), which is also included in the Southern Appalachian seismic zone, the earthquakes in eastern Tennessee occur at midcrustal depths ($\approx$ 20 km) compared to shallower than 15 km at all other locations considered in this report. (See e.g. Bollinger and Wheeler, 1983; Johnston *et al.*, 1985; SEUSSN Contributors, 1985).

In view of the above, I recommend that the seismicity in the Southern Appalachian seismic zone be treated as a part of a single seismotectonic province rather than split into two provinces based on their physiographic characteristics.

c. Sections 2.1.3 and 2.1.5 Charleston Epicentral Area and the New Madrid Faulted Zone

These seismotectonic source zones are based on the historically anomalous seismicity, and the ongoing seismicity at these locations. I am in basic agreement with the delineation of these zones. These zones include in them the 1886 epicentral intensity MM X (Bollinger, 1977) earthquake near Charleston and the epicentral intensity XII events in

1811-1812 near New Madrid, Mo. The Oconee site probably encountered MM VII intensities due to these shocks.

d. Section 2.1.6 Central Stable Region

This seismotectonic source zone is bounded to the southeast (Figure 1) by the Deformed Appalachian Highlands and surrounds the New Madrid Faulted Zone. The largest event considered in this region was the 1929 Attica, N.Y. event with an intensity value of VIII. No mention was made of the M_{bLg} 5.3 (MMI VII) Sharpsburg, Kentucky earthquake of July 1980 (Mauk et al., 1982). This event was associated with MMI II-IV shaking in portions of South Carolina, although not at the Oconee site. However, I agree with the conclusion in the report that "....Because of the distance involved, the Central Stable region does not contribute significantly to seismic hazard at the Oconee site...".

e. Section 2.1.7 Florida Platform and Lower Coastal Plain

I am in agreement with the assessment in the report - both in terms of delineation of the boundaries of this zone and the absence of any significant hazard at Oconee site due to seismicity in the zone.

III. Section 2.2 Average Annual Activity Rate

In the report it is claimed that "....historical data base...." with the company was used to compute for each seismotectonic region the average number of earthquakes per year with epicentral intensities exceeding IV. The data used

covered the period 1870 to 1979 - for which, it is claimed, data are complete for MM intensities greater than IV. Some of the shortcomings/omissions are listed below.

i. It is not apparent what the significance of 'activity rate' is - if it is not normalized to some specified areal extent. In the report they consider the number of earthquakes over a 110 year period - but give no consideration to the area covered in a region. Thus the Central Stable Region (with the largest area) has the largest annual activity rate of earthquakes with MM intensity greater than IV (.882), whereas Charleston (.173) was the second lowest (the lowest being Florida platform). However, if these observations are normalized with respect to area (Table 1) the results are perhaps more meaningful. The unnormalized activity rate is really just a measure of the number of events in that region (Table 1).

ii. It would perhaps have been more useful (and supplied a consistency check) if normalized activity rates had been obtained, and compared with the a-values for the various regions.

iii. As noted earlier, no data were provided.

iv. It is not clear if events with intensity IV were used or not. It was pointed out that historical data for events with epicentral intensity less than IV were incomplete, and rates were computed for events with intensity exceeding IV - no mention was made of events with intensity IV.

v. It was not specified in calculating these rates if aftershocks of larger events had been removed. Two of the larger events in the study, the 1886 Charleston earthquake and the 1897 Giles County, Virginia earthquake were both followed by aftershocks with intensity $\geq$ IV.

vi. No effort was made to compare the calculated activity rates with those available in the literature. For example, Bollinger (1973, 1974) obtained the following results.

The rates of occurrence of intensity VII and stronger events are about 2.5 per century for the South Carolina-Georgia Seismic Zone compared to 8 per century for the Southern Appalachian region. Comparing all the zones, Bollinger (1974) noted that "....over the past century, for I_o $\geq$ IV, the Southern Appalachian seismic zone and Central Virginia seismic zone have been equally active at 6.2 and 6.3 events per 10,000 km^2, respectively, while the South Carolina-Georgia seismic zone has had 3.2 events per 10,000 km^2. If all reported earthquakes are utilized, then the activity figures are: Southern Appalachian seismic zone, 9.8; Central Virginia seismic zone, 17.0; South Carolina-Georgia seismic zone, 31.8." The current activity (Figure 10) appears to bear out these trends.

vii. For meaningful results I recommend that seismicity rates should also be calculated for the seismic zones of Bollinger (1973), in particular for the Southern Appalachian

seismic zone. These should then be compared with the corresponding a-values.

Table 1

Seismotectonic Region*	Area (sq.mi.)*	Annual Activity Rate* Io > IV MM	Annual Activity Rate** per 10,000 sq. mi. x 10^{-2}	No. of Events** Io > IV MM
Piedmont and Upper Coastal Plain	127,400	0.609	4.8	67
Blue Ridge	25,850	0.282	10.9	31
Charleston Zone	8,800	0.173	19.7	19
Deformed Appalachian Highlands	63,160	0.473	7.5	52
Central Stable Highlands	309,400	0.882	2.9	97
New Madrid Zone	12,140	0.764	62.9	84
Florida Platform	210,000	0.054	0.3	6

---

* From Report
**This review

IV. Section 2.3 Epicentral Intensity Frequency Distribution

The approach used in this section is basically straightforward and standard. However, the following observations may be pertinent.

i. Most of the historical data in eastern United States are in the form of epicentral intensities. It is therefore

not uncommon to list the Gutenberg-Richter relationship in terms of intensities (e.g. Chinnery, 1979). That approach has been taken in the report (eq. 1 on page J-3-16). Various empirical magnitude - intensity relationships have been obtained by different authors, and as Chinnery (1979, p. 765) notes, they are of form

$$M = a_1 + a_2 I.$$

Chinnery further notes that for eastern United States, the appropriate value of a_2 is 0.6. Thus for the 'intensity b-values' of 0.54 to 0.6 obtained in the report, the corresponding 'magnitude b-values' are 0.9 to 1.0 respectively.

ii. The 'intensity b-values' obtained for the various regions are in general agreement with those obtained for larger areas by Chinnery (1979). In particular, the 'intensity b-values' obtained in the report are:

Blue Ridge	0.59
Piedmont and Upper Coastal Plain	0.56
Deformed Appalachian Highlands	0.59
Charleston Epicentral Area	0.48

Whereas, those obtained by Chinnery (1979) are :

South Carolina-Georgia and Southern Appalachian	0.46 to 0.55
Mississippi Valley	0.59
Southern New England	0.59

Bollinger (1973) obtained (for the whole):

Southeastern United States	0.56.

iii. As noted in Section II.a. the January 1913, Union County earthquake was assigned an intensity (MM) of VII to VIII (Bollinger, 1975a). If the larger value is used, how would it effect the b-value calculated for the Piedmont and Upper Coastal Plain region? This is relevant, because the Oconee plant lies in this seismotectonic zone.

iv. As noted in Section I.b., the Southern Appalachian seismic zone should have been considered separately for calculations of seismicity parameters. Even in the modified zones discussed on page J-3-27 of the report, this has not been done.

v. Long (1974) obtained b-values for portions of southeastern United States using instrumentally recorded events and magnitude values. He obtained a (magnitude) b-values ranging between 0.9 and 1.7 for microearthquakes and their aftershocks. This should have been mentioned/incorporated in the report.

V. Section 2.4 Maximum Earthquakes

In the absence of knowledge of a causative seismogenic feature, three hypotheses concerning maximum earthquakes were considered. These will be discussed individually.

i. In the first hypothesis the maximum earthquake in each seismotectonic region is equal to the historic maximum in that region. They make the assumption that the New Madrid Faulted Zone (XII) and Charleston Epicentral Area (X) have experienced their maximum earthquakes in historical times.

Although no supporting documentation was provided, this assumption is supported by the following observations. The results of paleoseismic investigations in the New Madred Faulted Zone (Russ, 1981) suggested a recurrence rate of ≈ 600 years for earthquakes with body wave magnitude equal to, or greater than 6.2. In the Charleston Epicentral area, recent paleoseismic investigations (Talwani and Cox, 1985) also suggest a recurrence time of 1500-1700 years for earthquakes with $m_b \geq 6.2$.

Also in magnitude-frequency plots for these regions, both the 1811-1812 New Madrid and the 1886 Charleston earthquakes are outliers - suggesting that the historic data do not cover a long enough period for these events to lie on the b-value curve.

ii. As noted earlier the largest event in the Piedmont, the Union County, S.C. earthquake of January 1913 had an epicentral intensity of VII to VIII. If the larger value is taken it will change the entry in Table I of the report from VII to VIII.

iii. The 1897 Giles County, Virginia event had an epicentral intensity of VIII. This should have been mentioned in connection with Deformed Appalachian Highland seismotectonic zone.

iv. The second hypothesis is based on Nuttli and Herrmann's (1978) procedure of assigning maximum earthquake on the basis of a 1000 year return period.

A priori this is not a very defensible method, as noted in the report (page J-3-20). However, in light of the results of paleoseismic investigations mentioned above, this method may be valid for eastern United States.

v. Using the second hypothesis, and an intensity value of VIII for the Union County earthquake will give a higher value (IX) for the maximum earthquake in the Piedmont province.

vi. In the third hypothesis, the maximum earthquake is equal to the intensity of event with a 1000 year return period (hypothesis 2) plus one intensity unit. This hypothesis was "....considered least likely hypothesis and has been assigned a probability of 0.2...".

vii. In summary, assigning an intensity VIII to the Union County event, changes the maximum earthquake in the Piedmont and Upper Coastal Plain as follows:

	Maximum Earthquake
Hypothesis 1	VIII
Hypothesis 2	IX ?
Hypothesis 3	X ?

VI. Section 2.7 Sensitivity Analysis

Given the choice of seismotectonic zones, attenuation functions , maximum earthquakes, values of the parameter b' etc, the analyses to determine the sensitivity of the results to various hypotheses were satisfactorily performed.

Some observations:

i. Perhaps other attenuation relationships for eastern United States should also have been considered. For the generally accepted form of the attenuation relation:

$$Is = Io + a + bR + c\log R$$

Table 2 gives a comparison of the different values available at the time the report was written.

Table 2

Region	a	b	c	Remarks	Ref
Charleston, S.C.	2.87	-0.00052	-2.88	R > 10	1
Central U.S.	3.7	-0.0011	-2.7	R > 20	2
Eastern U.S.	3.278	-0.0029	-2.277		3
Eastern U.S.	3.2	-0.00106	-2.7		4
The report	2.44	0	-3.08	R > 6 miles	

---

1. Bollinger (1977)
2. Gupta-Nuttli (1976)
3. Howell & Schultz (1974)
4. Anderson (1978)

iii. As noted earlier, the choice of source zones could have been different. It would have been useful if in the sensitivity analyses where different zones were combined, they had analyzed the Southern Appalachian seismic zone.

VII. Evaluating the Final Results

It is difficult to be sure how the 'final result' would be effected if some of the changes suggested in the previous section were incorporated.

Clearly, if intensity VIII is used as the maximum earthquake intensity in the Piedmont, and thus at the site, the calculated accelerations would be increased. Also, using a small concentrated Southern Appalachian seismic zone will amount to higher a-values than when that seismicity is divided into two seismotectonic zones.

Using different attenuation relations will perhaps influence the contribution of the nearer seismotectonic zones but not of the more distant ones.

Assumption of an intensity VII Reservoir induced earthquake at Lake Keowee will provide large accelerations at higher frequencies - a factor not important for the more distant and deeper tectonic events.

References

Algermissen, S.T. and D.M. Perkins 1976. A probabilistic estimate of maximum acceleration in rock in the contiguous United States: U.S. Geol. Surv. Open-File Report 76-416, p. 45.

Algermissen, S.T. et al. 1982. Probabilistic estimates of maximum acceleration and velocity in rock in the contiguous United States: U.S. Geol. Surv. Open-File Report 82-1033.

Anderson, J.G. 1978. On the attenuation of modified Mercalli intensity with distance in the United States: Bull. Seis. Soc. Am., v. 48, p. 1147-79.

Bollinger, G.A. 1973. Seismicity of the Southeastern United States: Bull. Seis. Soc. Am., v. 63, p. 1785-1808. Also see 1974, Errata, v. 64, p. 733-734.

Bollinger, G.A. 1975a. A Catalog of Southeastern United States Earthquakes, 1754 through 1974, in Research Div. Bulletin 101, Dept. of Geological Sciences, Virginia Polytechnic Institute and State University, Blacksburg, VA 24061, 68 pp.

Bollinger, G.A. 1975b. Seismic activity in the Southeastern United States: Eq. Eng. Conf., Univ. of S.C., p. 17-47.

Bollinger, G.A. 1977. Reinterpretation of the intensity data for the 1886 Charleston South Carolina, earthquake, in Rankin, D.W., ed., Studies related to the Charleston, South Carolina, earthquake of 1886 - A preliminary report: U.S. Geol. Surv. Prof. Paper 1028, p. 17-32.

Bollinger, G.A. and Russell L. Wheeler 1983. The Giles County, Virginia, Seismic Zone: Science, v. 219, p. 1063-1065.

Bollinger, G.A. and M.S. Sibol 1985. Seismicity, seismic reflection studies, gravity and geology of the central Virginia seismic zone: Part I. Seismicity: Geol. Soc. of Am. Bull., v. 96, p. 49-57.

Bollinger, G.A., C.J. Langer, and S.T. Harding 1976. The Eastern Tennessee earthquake sequence of October through December, 1973: Bull. Seis. Soc. Am. v. 66, p. 525.547.

Chinnery, M.A. 1979. A comparison of the seismicity of three regions of the Eastern U.S.: Bull. Seis. Soc. Am., v. 69, p. 757-772.

Cornell, C.A. 1968. Engineering seismic risk analysis: Bull. Seis. Soc. Am., v. 58, p. 1583-1606.

Gupta, I.N. and O.W. Nuttli 1976. Spatial attenuation of intensities for central U.S. earthquakes: Bull. Seis. Soc. Am., v. 66, p. 743-751.

Hatcher, R.D., Jr. 1978. Tectonics of the Western Piedmont and Blue Ridge, Southern Appalachians: Review and speculation: Am. Jour. Sci., v. 278, p. 276-304.

Higgins, M.W. and I. Zietz 1983. Geologic interpretation of geophysical maps of the pre-Cretaceous "basement" beneath the Coastal Plain of the Southeastern United States, in Hatcher, R.D., Jr., Williams, H., and Zietz, I., eds., Contributions to the Tectonics and Geophysics of Mountain Chains: Geol. Soc. Am. Memoir 158, p. 125-130.

Howell, B.F., Jr. and T.R. Schultz 1974. Attenuation of modified Mercalli intensity with distance from epicenters: Bull. Seis. Soc. Am., v. 65, p. 651-665.

Long, L.T. 1974. Earthquake sequences and b-values in the Southeast U.S.: Bull. Seism. Soc. Am., v. 64, p. 267-273.

Mauk, F.J., D. Christensen, and S. Henry 1982. The Sharpsburg, Kentucky, earthquake 17 July 1980: Main shock parameters and isoseismal maps: Bull. Seis. Soc. Am., v. 72, p. 221-236.

Popenoe, P., and I. Zietz 1977. The nature of the geophysical basement beneath the Coastal Plain of South Carolina and northeastern Georgia, in Ranking, D.W., ed., Studies related to the Charleston, South Carolina, earthquake of 1886 - A preliminary report: U.S. Geological Survey Professional Paper 1028, p. 119-137.

Russ, D.P. 1982. Model for assessing earthquake potential and fault activity in the New Madrid Seismic Zone, in Earthquakes and Earthquake Engineering in Eastern U.S., ed. J.E. Beavers, Ann Arbor Science Publishers, Michigan, 48106 v. 1, p. 309-335.

SEUSSN Contributors 1985. Availability of a six-year (1977-1983) earthquake catalog for the Southeastern United States derived from network monitoring: Bull. Seis. Soc. Am., v. 75, p. 629-633.

Sowers, G.F., and G.H. Fogle 1979. Intensity survey of the Seneca, South Carolina, Earthquake, July 13, 1971: Earthquake Notes, v. 50, no. 1, p. 25-36.

Stover, C.W., J.H. Minsch, G.B. Reagor, and P.K. Smith 1980. Earthquakes in the United States, January-March 1979: U.S. Geol. Sur. Circular 836-A, 42 pp.

Taber, Stephen 1913. The South Carolina earthquake of January 1, 1913: Bull: Seis. Soc. Am., v. 3, p. 6-13.

Talwani, P. and J. Cox 1985. Paleoseismic evidence for recurrence of earthquakes near Charleston, South Carolina: Science, v. 228, p. 379-381.

Talwani, P., Donald Stevenson, David Amick, and Jin Chiang 1979 An earthquake swarm at Lake Keowee, South Carolina: Bull. Seis. Soc. Am., v. 69, p. 825-841.

Taylor, K.B. and P. Talwani 1979. An isoseismal study of the August 25, 1979 Lake Jocassee earthquake, Oconee County, South Carolina: Earthquake Notes, v. 50, no. 3, p. 41-42.

Williams, H., and R.D. Hatcher, Jr. 1982. Suspect terranes and accretionary history of the Appalachian orogen: Geology, v. 10, p. 530-536.

Williams, H., and R.D. Hatcher, Jr. 1983. Appalachian suspect terranes in Hatcher, R.D., Jr., Williams, H., and Zietz, I., eds., Contributions to the tectonics and geophysics of mountain chains: Geol. Soc. of Am. Memoir 158, p. 33-53

APPENDIX E

A REVIEW OF THE SEISMIC ANALYSES FOR JOCASSE DAM AND OCONEE DIKES USED IN OCONEE PRA (A PROBABILISTIC RISK ASSESSMENT OF OCONEE UNIT 3)

August 1985

Prepared by: C. Costantino and K. Bandyopadhyay

Structural Analysis Division
Department of Nuclear Energy
Brookhaven National National Laboratory
Upton, NY 11973

E.1 INTRODUCTION

The Structural Analysis Division (SAD) of BNL has evaluated the seismic and failure analyses performed for the Jocassee Dam and Oconee Dikes. These analyses were performed as part of the seismic PRA study conducted by EPRI and Duke Power Co. for the Oconee Nuclear Station, Unit 3, and are presented in Report NSAC/60, June 1984. This review consists only of our evaluation of the description presented in the PRA report of the various studies performed. The results of this evaluation and conclusions reached are presented in the following sections of the report.

E.2 ANALYSES PERFORMED

The intent of the seismic analyses was to obtain an evaluation of the seismic fragility curves for both the Jocassee Dam and Oconee Dikes at the plant intake basin, which are to relate peak bedrock acceleration to probability of failures which can lead to flooding of the site. We will focus our comments herein more to an evaluation of the applicability of the analyses performed, rather than on the probability studies themselves, since this evaluation will lead directly to an assessment of the applicability of the derived results of the PRA study.

The slope stability analysis used is based on the Simplified Bishop Method of analysis which has been used for many years to estimate the stability of slopes in various deterministic studies. For those unfamiliar with this approach, it is based upon the equilibrium analyses of the Method of Slices applied to an assumed trial circular failure surface passed through a two-dimensional cross-section of the earth dam. Failure is assumed to occur by a rigid body rotation of the block of soil within the circular arc about the center of the circle. The safety factor of this particular failure mode is determined by comparing the resisting moments developed by shear strength countering the rotation to the driving motion initiating the rotation. For simple static problems, the driving motions are caused by gravity forces and seepage forces tending to push the soil down the slope (or about the center of rotation). Pseudodynamic effects are included by adding additional body forces proportional to the peak ground acceleration assumed for the dam. In slope stability analyses, very many trial failure surfaces are evaluated, with the one yielding the lowest factor of safety being the most critical. In addition, static analyses using other assumed failure surfaces (log spirals, block wedges, etc.) are also tried in an attempt to determine the critical failure mode, as well as the lowest factor of safety.

In the analyses described in the PRA report, the following primary assumptions were made for the stability analyses for both the dam and the dikes.

(a) Only potential circular failure surfaces were considered for both the dam and dikes. No wedge studies, which may be of particular interest for the dam, were included.

(b) In choosing potential failure circles for the dam, only those circles which break out at or near the level of the unpounded water (and which would thus lead to overtopping of the dam) were considered. Other failure circles which may be associated with internal piping or liquefaction failure modes were not considered.

(c) In the rigid body moment equilibrium analyses performed for each circle (for both the dam and dikes), seismic effects were included only in the driving moment computation, but not in the resisting moment computation. In addition, the impact of the vertical seismic component on the calculation was not mentioned.

(d) Seepage forces were neglected in the analyses on the grounds that they would be of negligible effect except in the core of material of the dam.

(e) The peak seismic force applied to the rigid soil section is determined by applying an acceleration amplification factor to the peak bedrock acceleration estimated for the site. The amplification factor used is based, apparently, upon natural period estimates of the dam obtained from other elastic anlayses.

(f) Estimates of the probability that the peak displacement of the soil block will exceed a critical value are apparently based on simple rigid body estimates for the case where safety factor is less than 1. These are included in an attempt to yield information on probability of cracking of the dam core material.

D.3 EVALUATION OF THE ANALYSES PERFORMED

Considering the various aspects of the analyses performed for both the dam and dikes, the following comments can be made which will lead to an evaluation of the adequacy of the results obtained.

(a) It is stated on page J-7-22 of the PRA report that

> ". . .the Simplified Bishop Method is generally regarded as an accurate procedure of slope stability analyses. . . . Errors have been estimated to be of the order of 10%; consequently the factor λ_M has been taken to have mean value 1 and standard deviation 0.1. . . ."

It should be pointed out that the error estimates mentioned above refers to the Simplified Bishop Method (used in the PRA report), as compared to the more complete "Method of Slices", including internal forces in the calculations. Both of these methods are based upon rigid body, circular failure surface analyses, with the Simplified Bishop Method merely reducing the calculation requirements by simplifying assumptions. However, it whould be realized that actual estimates of errors in safety factor are much greater than the 10% mentioned above. The basic assumptions common to both methods lead to assumptions common to both methods lead to errors much greater than 10%. That is the reason for the use of safety factors 1.5 and greater being typically used for slope stability analyses of even the simplest configurations.

(b) The circular failure surface analyses (of which the Bishop Method is only one) is based upon the primary assumption of rigid block behavior. Its applicability is clearly to static problems wherein the time frame of interest is very large as compared to the time of propagation of stress waves through and around the dam. The method was modified in previous decades by the simple assumption of including a horizontal seismic pseudo-static inertia force. This was done because it was simple and could be handled in the precomputer age. With the advent of large finite element computer programs, more detailed analyses are now performed to try to ascertain estimates of stability of earth slopes.

(c) By looking at the nonuniform configurations of both the dam and dikes, it is not clear that the potential circular failure surface is most critical.

(d) In all the analyses performed, seepage effects were neglected. Yet, it is well known that they will have significant effects on safety factor, particularly for configurations similar to the dikes. For the dam, pore pressure and liquefaction effects under seismic loadings are extremely important in the core material. These have not been evaluated.

(e) In the analyses, seismic effects were not included in evaluating resisting moments (page J-7-9 of the PRA report). Yet, in evaluating the soil shear strength along the failure surface (eq. 2), the seismic coefficient will clearly impact the intergranular stress term.

(f) The effects of vertical seismic earthquake coefficients have not been mentioned in the analyses, although it clearly will have an impact on the calculations.

(g) Other failure modes developed by pore pressure and soil liquefaction both through and under the dam have not been addressed. These are clearly important considerations for any dam as they perenially lead to catastrophic dam failures. This is particularly true for configurations similar to the Oconee Dikes.

APPENDIX F

SEISMIC FAULT TREES

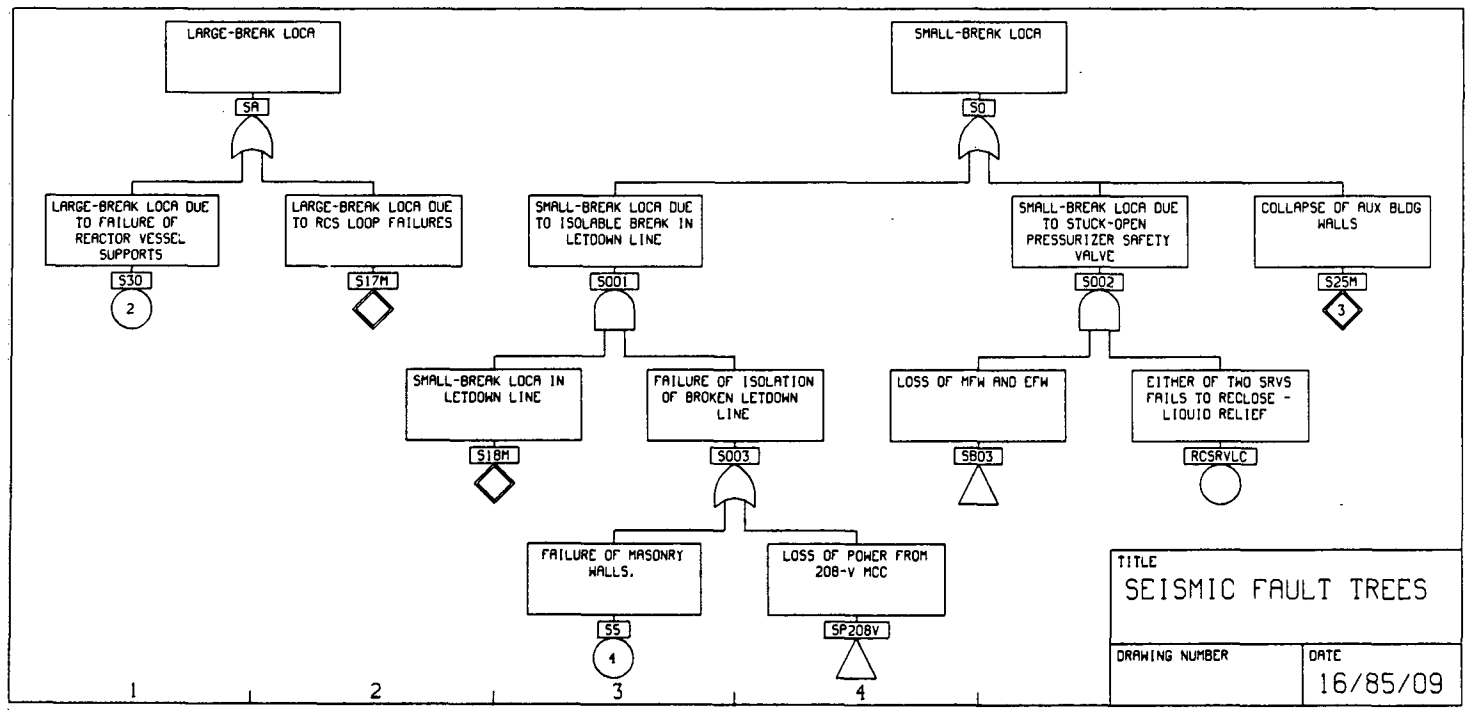
LARGE-BREAK LOCA
SA
LARGE-BREAK LOCA DUE TO FAILURE OF REACTOR VESSEL SUPPORTS
S30
2
LARGE-BREAK LOCA DUE TO RCS LOOP FAILURES
S17M
SMALL-BREAK LOCA
SO
SMALL-BREAK LOCA DUE TO ISOLABLE BREAK IN LETDOWN LINE
S001
SMALL-BREAK LOCA IN LETDOWN LINE
S18M
FAILURE OF ISOLATION OF BROKEN LETDOWN LINE
S003
FAILURE OF MASONRY WALLS.
S5
4
LOSS OF POWER FROM 208-V MCC
SP208V
SMALL-BREAK LOCA DUE TO STUCK-OPEN PRESSURIZER SAFETY VALVE
S002
LOSS OF MFW AND EFW
SB03
EITHER OF TWO SRVS FAILS TO RECLOSE - LIQUID RELIEF
RCSRVLC
COLLAPSE OF AUX BLDG WALLS
S25M
3
1
2
3
4
TITLE
SEISMIC FAULT TREES
DRAWING NUMBER
DATE
16/85/09

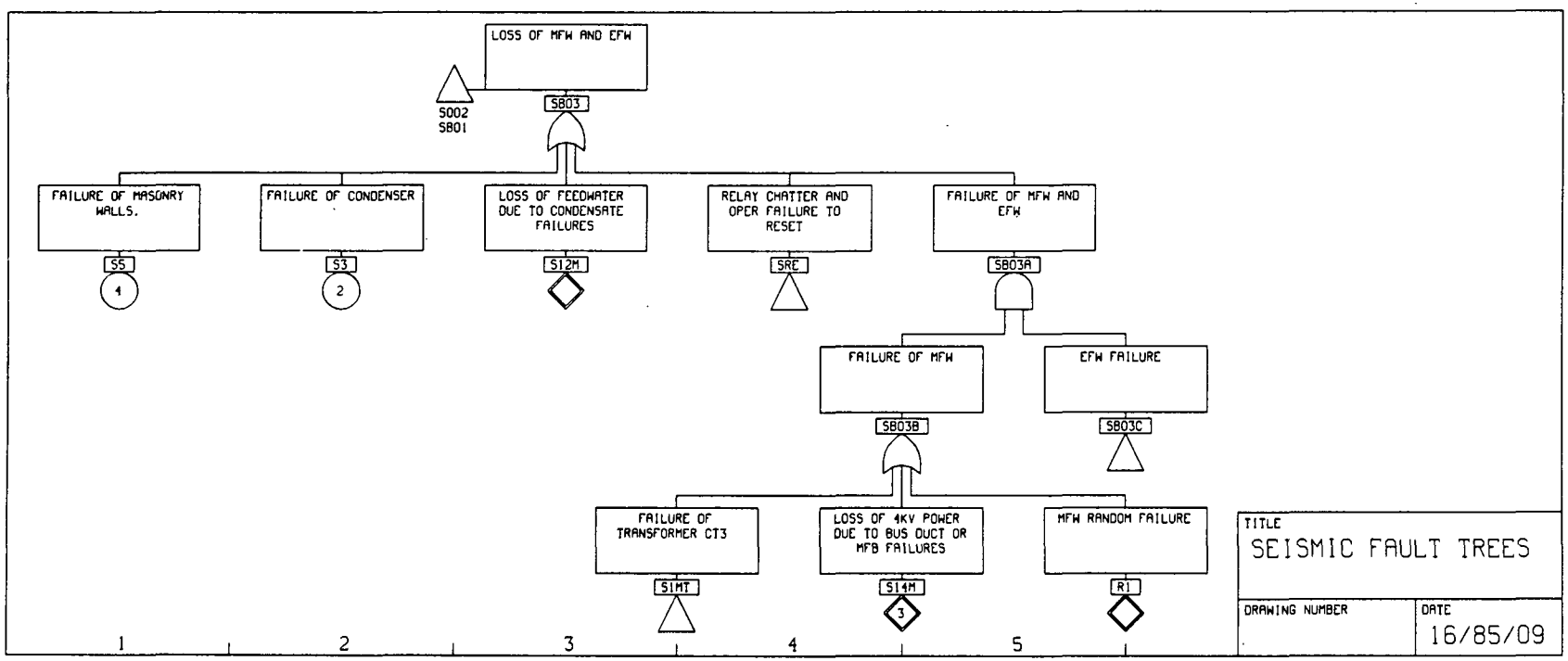
LOSS OF MFW AND EFW
S002
SB01
SB03
FAILURE OF MASONRY WALLS.
S5
4
FAILURE OF CONDENSER
S3
2
LOSS OF FEEDWATER DUE TO CONDENSATE FAILURES
S12M
RELAY CHATTER AND OPER FAILURE TO RESET
SRE
FAILURE OF MFW AND EFW
SB03A
FAILURE OF MFW
SB03B
EFW FAILURE
SB03C
FAILURE OF TRANSFORMER CT3
S1MT
LOSS OF 4KV POWER DUE TO BUS DUCT OR MFB FAILURES
S14M
3
MFW RANDOM FAILURE
R1
1
2
3
4
5
TITLE
SEISMIC FAULT TREES
DRAWING NUMBER
DATE
16/85/09

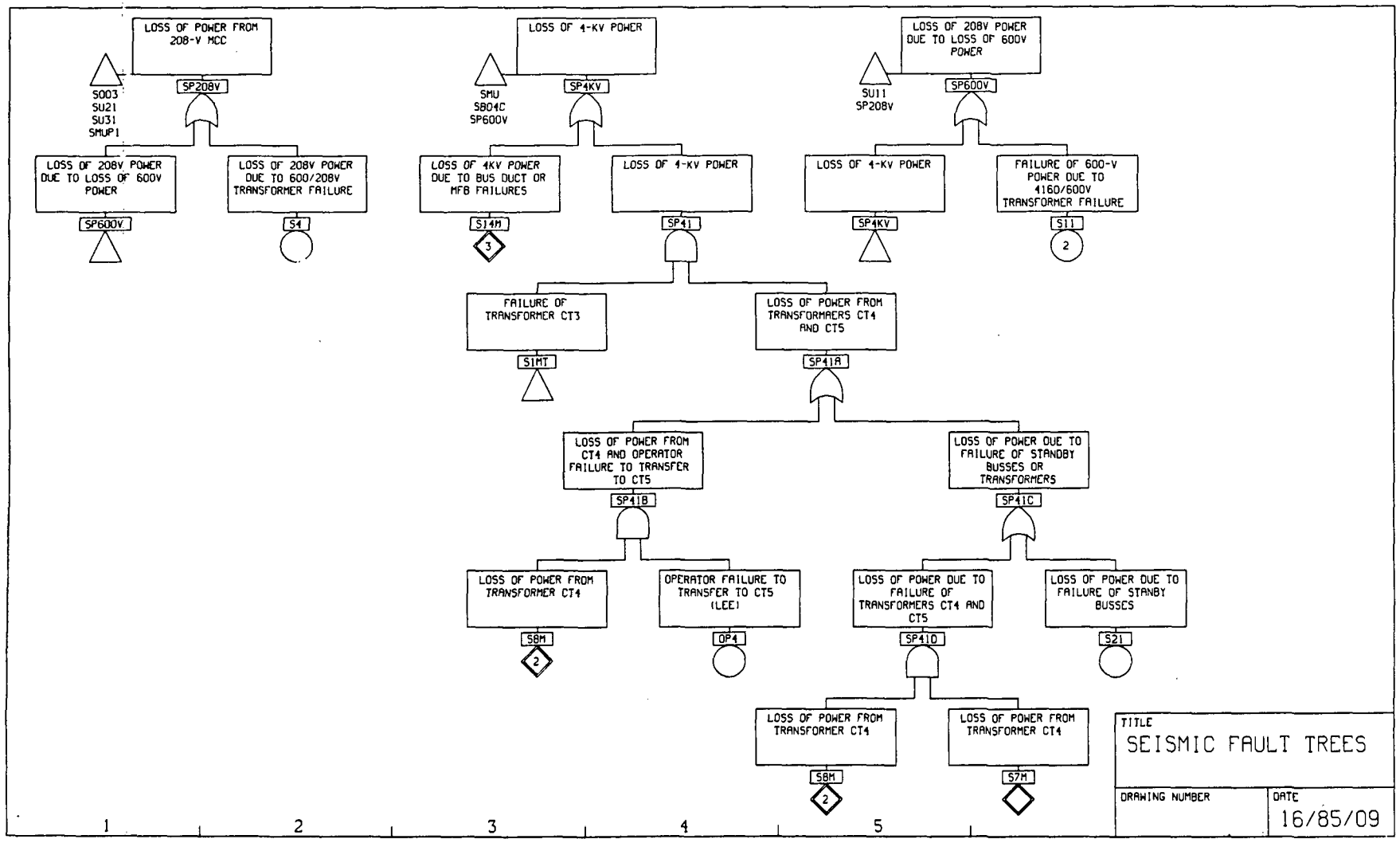
LOSS OF POWER FROM 208-V MCC
SP208V
S003
SU21
SU31
SMUP1
LOSS OF 208V POWER DUE TO LOSS OF 600V POWER
SP600V
LOSS OF 208V POWER DUE TO 600/208V TRANSFORMER FAILURE
S4
LOSS OF 4-KV POWER
SP4KV
SMU
SB04C
SP600V
LOSS OF 4KV POWER DUE TO BUS DUCT OR MFB FAILURES
S14M
3
LOSS OF 4-KV POWER
SP41
FAILURE OF TRANSFORMER CT3
S1MT
LOSS OF POWER FROM TRANSFORMAERS CT4 AND CT5
SP41A
LOSS OF POWER FROM CT4 AND OPERATOR FAILURE TO TRANSFER TO CT5
SP41B
LOSS OF POWER FROM TRANSFORMER CT4
S8M
2
OPERATOR FAILURE TO TRANSFER TO CT5 (LEE)
OP4
LOSS OF POWER DUE TO FAILURE OF STANDBY BUSSES OR TRANSFORMERS
SP41C
LOSS OF POWER DUE TO FAILURE OF TRANSFORMERS CT4 AND CT5
SP41D
LOSS OF POWER FROM TRANSFORMER CT4
S8M
2
LOSS OF POWER DUE TO FAILURE OF STANBY BUSSES
S21
LOSS OF POWER FROM TRANSFORMER CT4
S7M
LOSS OF 208V POWER DUE TO LOSS OF 600V POWER
SP600V
SU11
SP208V
LOSS OF 4-KV POWER
SP4KV
FAILURE OF 600-V POWER DUE TO 4160/600V TRANSFORMER FAILURE
S11
2
1
2
3
4
5
TITLE
SEISMIC FAULT TREES
DRAWING NUMBER
DATE
16/85/09

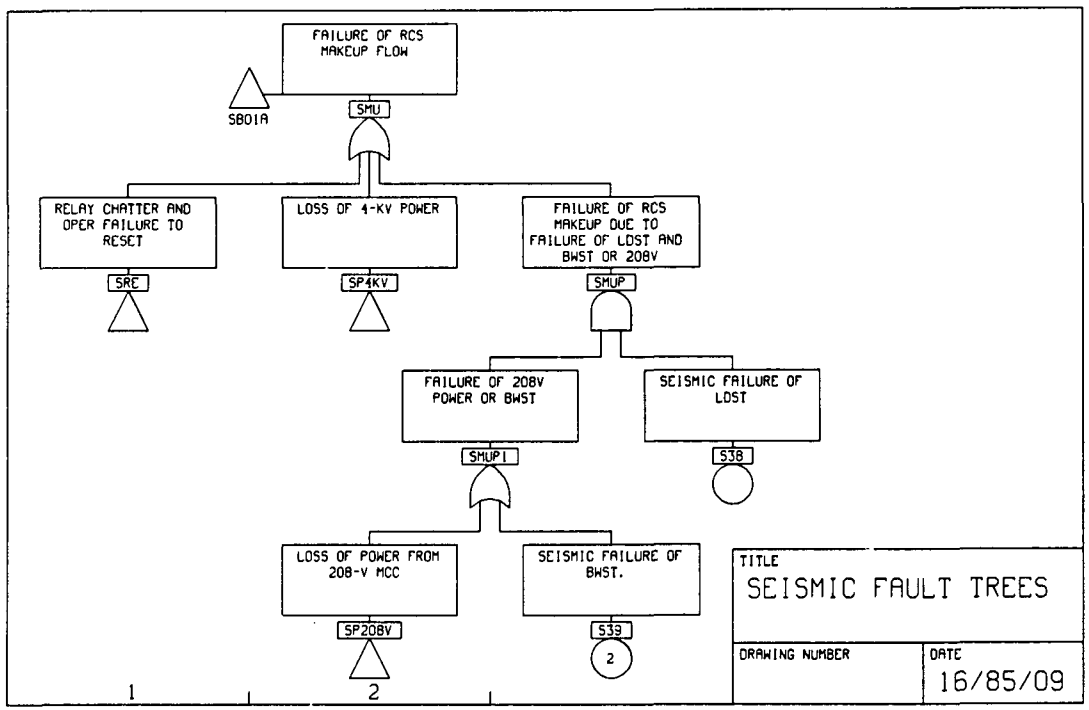
FAILURE OF RCS MAKEUP FLOW
SB01A
SMU
RELAY CHATTER AND OPER FAILURE TO RESET
LOSS OF 4-KV POWER
FAILURE OF RCS MAKEUP DUE TO FAILURE OF LDST AND BWST OR 208V
SRE
SP4KV
SMUP
FAILURE OF 208V POWER OR BWST
SEISMIC FAILURE OF LDST
SMUP1
S38
LOSS OF POWER FROM 208-V MCC
SEISMIC FAILURE OF BWST.
SP208V
S39
2
1
2
TITLE
SEISMIC FAULT TREES
DRAWING NUMBER
DATE
16/85/09

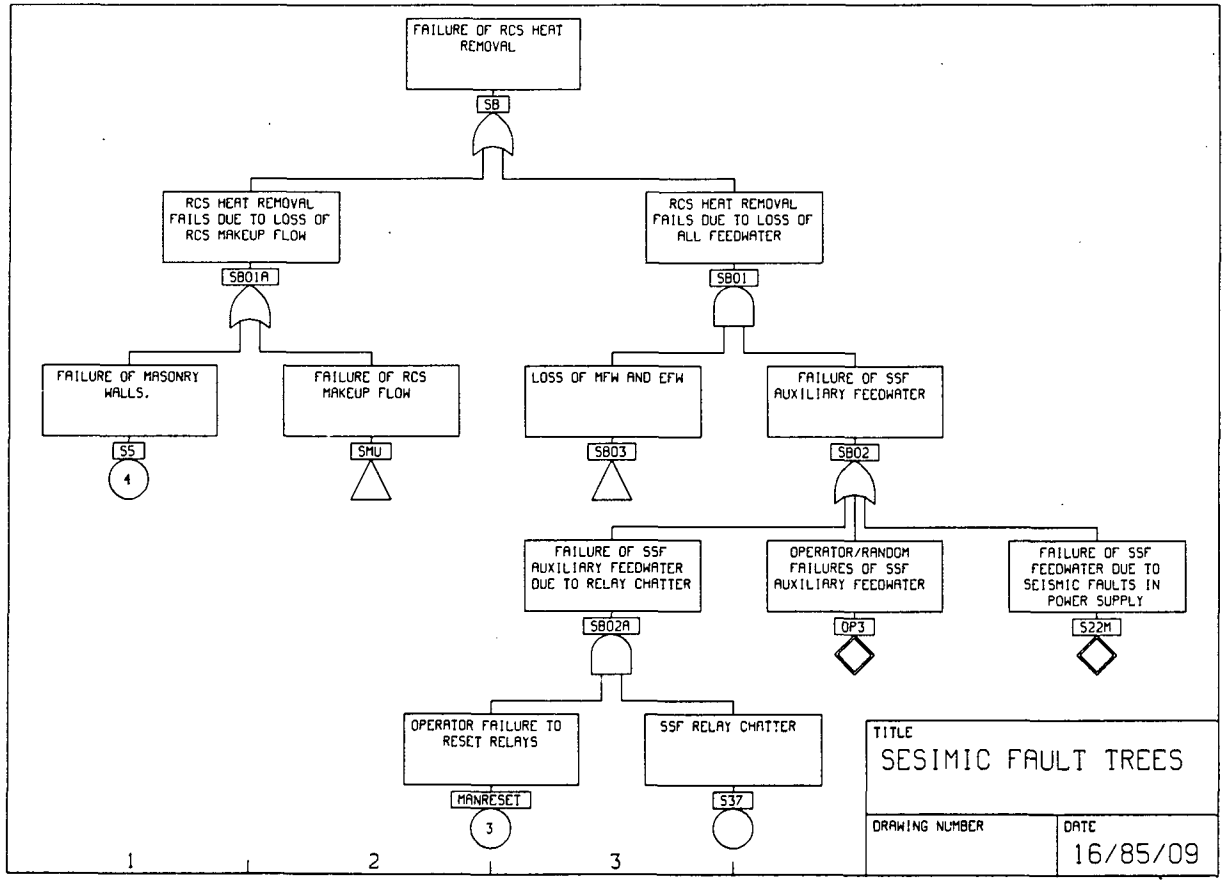
FAILURE OF RCS HEAT REMOVAL
SB
RCS HEAT REMOVAL FAILS DUE TO LOSS OF RCS MAKEUP FLOW
SB01A
RCS HEAT REMOVAL FAILS DUE TO LOSS OF ALL FEEDWATER
SB01
FAILURE OF MASONRY WALLS.
S5
4
FAILURE OF RCS MAKEUP FLOW
SMU
LOSS OF MFW AND EFW
SB03
FAILURE OF SSF AUXILIARY FEEDWATER
SB02
FAILURE OF SSF AUXILIARY FEEDWATER DUE TO RELAY CHATTER
SB02A
OPERATOR/RANDOM FAILURES OF SSF AUXILIARY FEEDWATER
OP3
FAILURE OF SSF FEEDWATER DUE TO SEISMIC FAULTS IN POWER SUPPLY
S22M
OPERATOR FAILURE TO RESET RELAYS
MANRESET
3
SSF RELAY CHATTER
S37
1
2
3
TITLE
SESIMIC FAULT TREES
DRAWING NUMBER
DATE
16/85/09

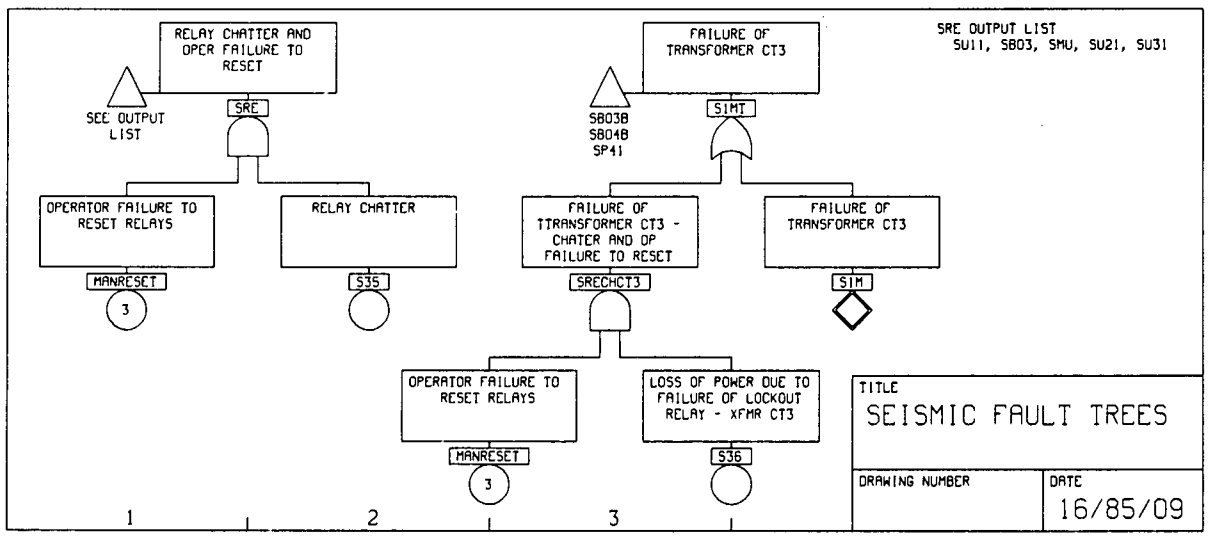
RELAY CHATTER AND OPER FAILURE TO RESET
SRE
SEE OUTPUT LIST
OPERATOR FAILURE TO RESET RELAYS
MANRESET
3
RELAY CHATTER
S35
FAILURE OF TRANSFORMER CT3
S1MT
S803B
S804B
SP41
FAILURE OF TTRANSFORMER CT3 - CHATER AND OP FAILURE TO RESET
SRECHCT3
FAILURE OF TRANSFORMER CT3
S1M
OPERATOR FAILURE TO RESET RELAYS
MANRESET
3
LOSS OF POWER DUE TO FAILURE OF LOCKOUT RELAY - XFMR CT3
S36
SRE OUTPUT LIST
SU11, SB03, SMU, SU21, SU31
TITLE
SEISMIC FAULT TREES
DRAWING NUMBER
DATE
16/85/09
1
2
3

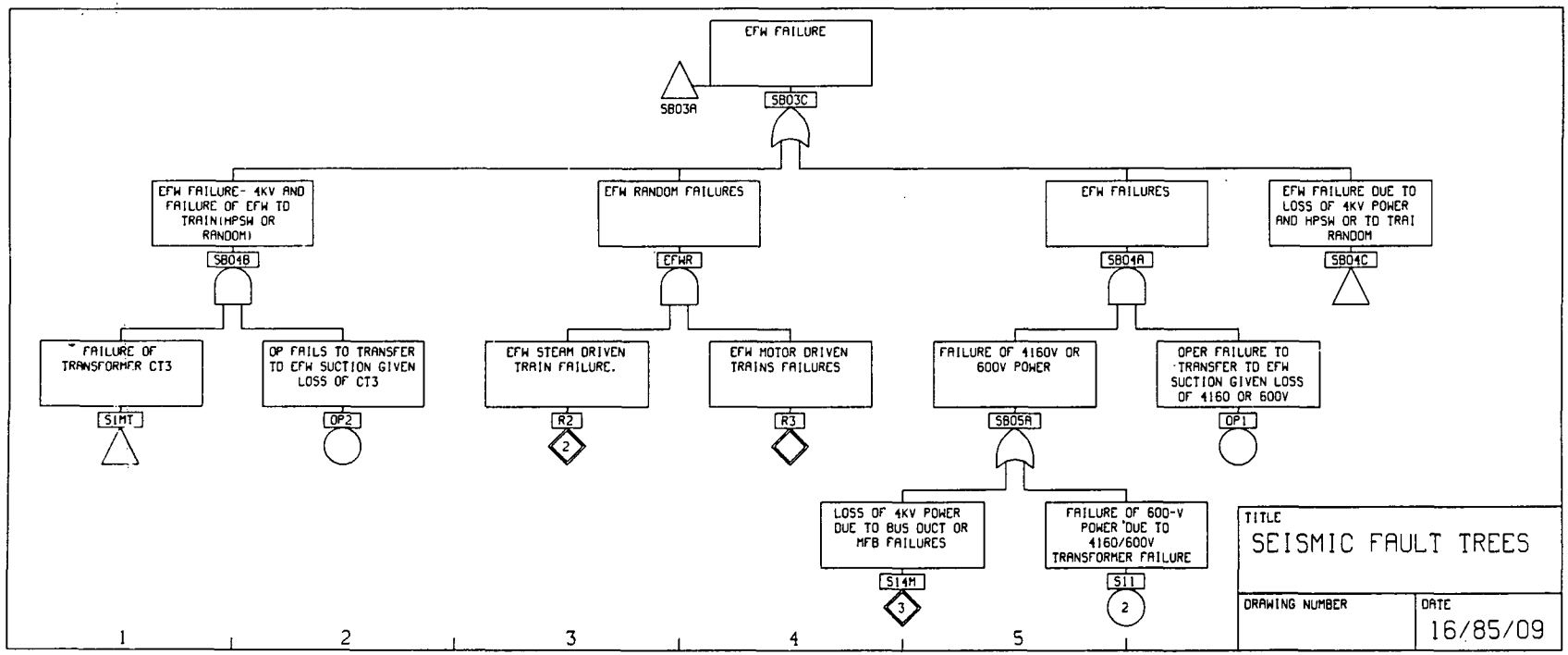
EFW FAILURE
SB03A
SB03C
EFW FAILURE- 4KV AND FAILURE OF EFW TO TRAIN(HPSW OR RANDOM)
SB04B
EFW RANDOM FAILURES
EFWR
EFW FAILURES
SB04A
EFW FAILURE DUE TO LOSS OF 4KV POWER AND HPSW OR TO TRAI RANDOM
SB04C
FAILURE OF TRANSFORMER CT3
S1MT
OP FAILS TO TRANSFER TO EFW SUCTION GIVEN LOSS OF CT3
OP2
EFW STEAM DRIVEN TRAIN FAILURE.
R2
2
EFW MOTOR DRIVEN TRAINS FAILURES
R3
FAILURE OF 4160V OR 600V POWER
SB05A
OPER FAILURE TO TRANSFER TO EFW SUCTION GIVEN LOSS OF 4160 OR 600V
OP1
LOSS OF 4KV POWER DUE TO BUS DUCT OR MFB FAILURES
S14M
3
FAILURE OF 600-V POWER DUE TO 4160/600V TRANSFORMER FAILURE
S11
2
1
2
3
4
5
TITLE
SEISMIC FAULT TREES
DRAWING NUMBER
DATE
16/85/09

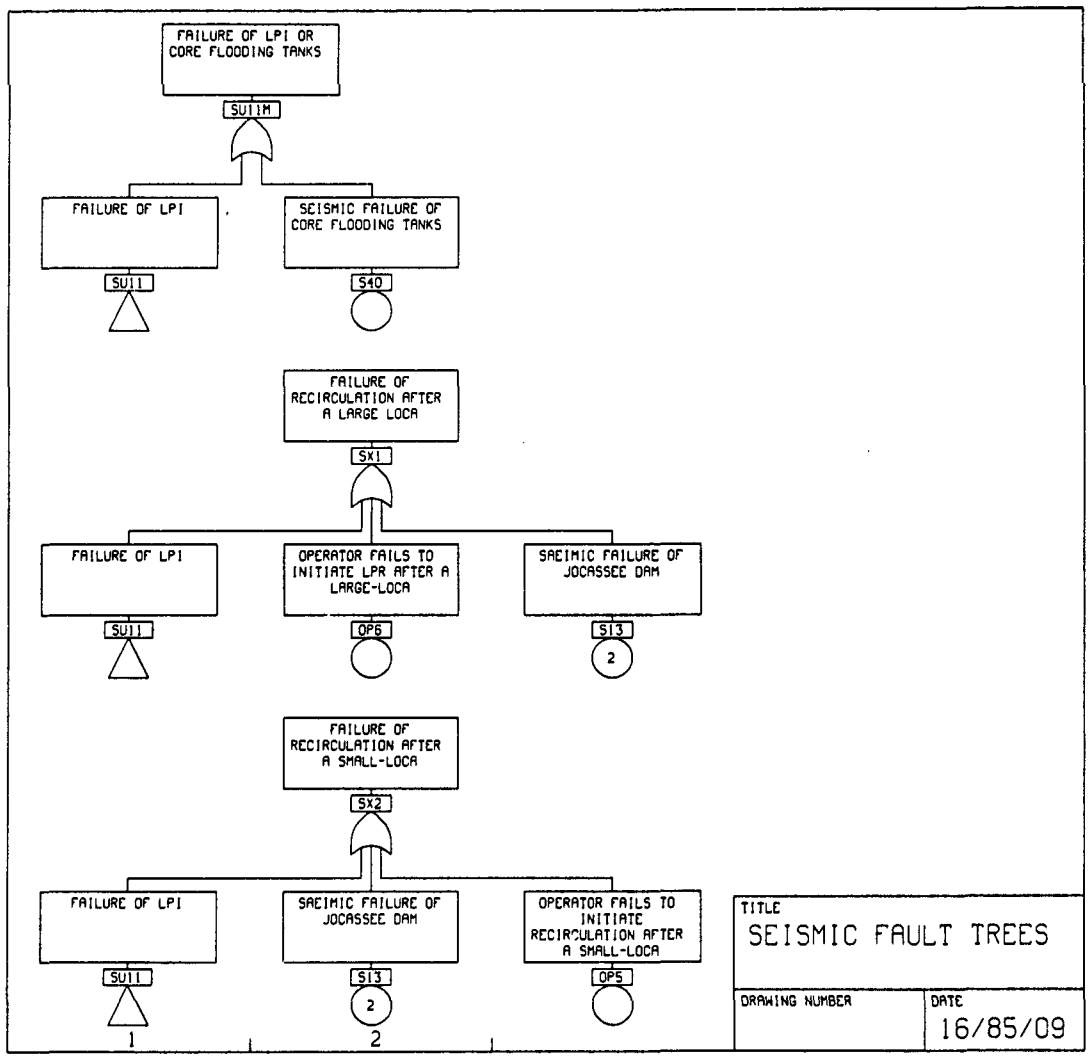
FAILURE OF LPI OR CORE FLOODING TANKS
SU11M
FAILURE OF LPI
SU11
SEISMIC FAILURE OF CORE FLOODING TANKS
S40
FAILURE OF RECIRCULATION AFTER A LARGE LOCA
SX1
FAILURE OF LPI
SU11
OPERATOR FAILS TO INITIATE LPR AFTER A LARGE-LOCA
OP6
SEIMIC FAILURE OF JOCASSEE DAM
SI3
2
FAILURE OF RECIRCULATION AFTER A SMALL-LOCA
SX2
FAILURE OF LPI
SU11
1
SEIMIC FAILURE OF JOCASSEE DAM
SI3
2
2
OPERATOR FAILS TO INITIATE RECIRCULATION AFTER A SMALL-LOCA
OP5
TITLE
SEISMIC FAULT TREES
DRAWING NUMBER
DATE
16/85/09

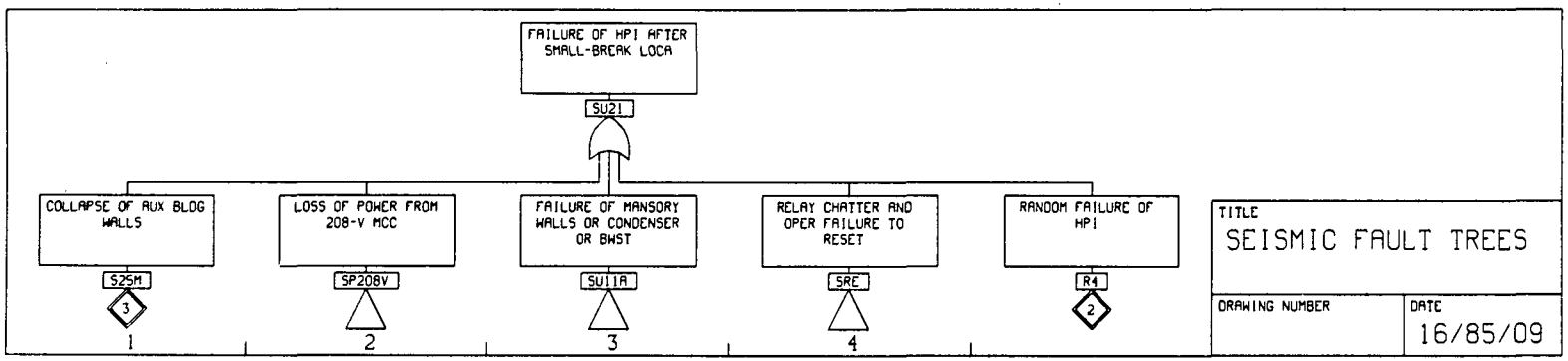
FAILURE OF HPI AFTER SMALL-BREAK LOCA
SU21
COLLAPSE OF AUX BLDG WALLS
S25M
3
1
LOSS OF POWER FROM 208-V MCC
SP208V
2
FAILURE OF MANSORY WALLS OR CONDENSER OR BWST
SU11A
3
RELAY CHATTER AND OPER FAILURE TO RESET
SRE
4
RANDOM FAILURE OF HPI
R4
2
TITLE
SEISMIC FAULT TREES
DRAWING NUMBER
DATE
16/85/09

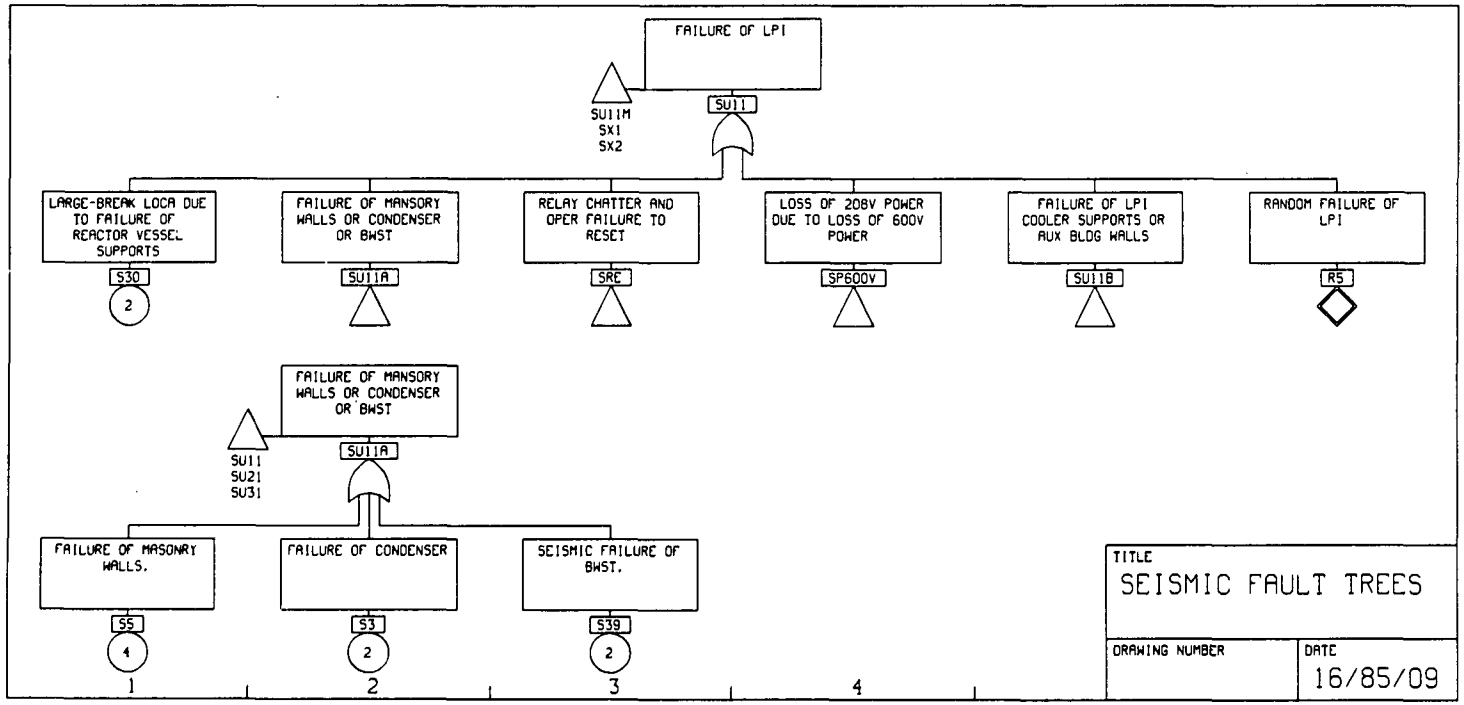
FAILURE OF LPI
SU11
SU11M
SX1
SX2
LARGE-BREAK LOCA DUE TO FAILURE OF REACTOR VESSEL SUPPORTS
S30
2
FAILURE OF MANSORY WALLS OR CONDENSER OR BWST
SU11A
RELAY CHATTER AND OPER FAILURE TO RESET
SRE
LOSS OF 208V POWER DUE TO LOSS OF 600V POWER
SP600V
FAILURE OF LPI COOLER SUPPORTS OR AUX BLDG WALLS
SU11B
RANDOM FAILURE OF LPI
R5
FAILURE OF MANSORY WALLS OR CONDENSER OR BWST
SU11A
SU11
SU21
SU31
FAILURE OF MASONRY WALLS.
S5
4
FAILURE OF CONDENSER
S3
2
SEISMIC FAILURE OF BWST.
S39
2
1
2
3
4
TITLE
SEISMIC FAULT TREES
DRAWING NUMBER
DATE
16/85/09

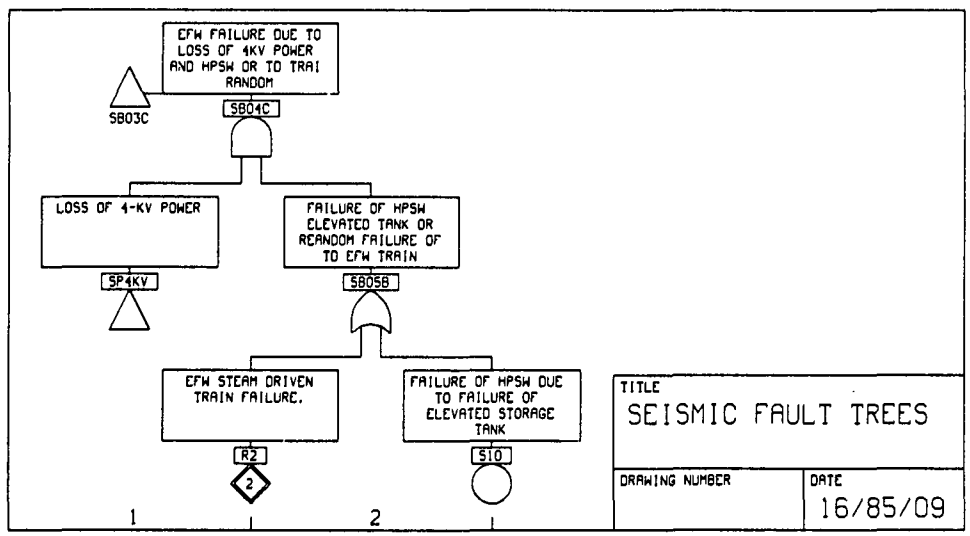
EFW FAILURE DUE TO LOSS OF 4KV POWER AND HPSW OR TO TRAI RANDOM
SB03C
SB04C
LOSS OF 4-KV POWER
SP4KV
FAILURE OF HPSW ELEVATED TANK OR RCANDOM FAILURE OF TO EFW TRAIN
SB05B
EFW STEAM DRIVEN TRAIN FAILURE.
R2
2
FAILURE OF HPSW DUE TO FAILURE OF ELEVATED STORAGE TANK
S10
1
2
TITLE
SEISMIC FAULT TREES
DRAWING NUMBER
DATE
16/85/09

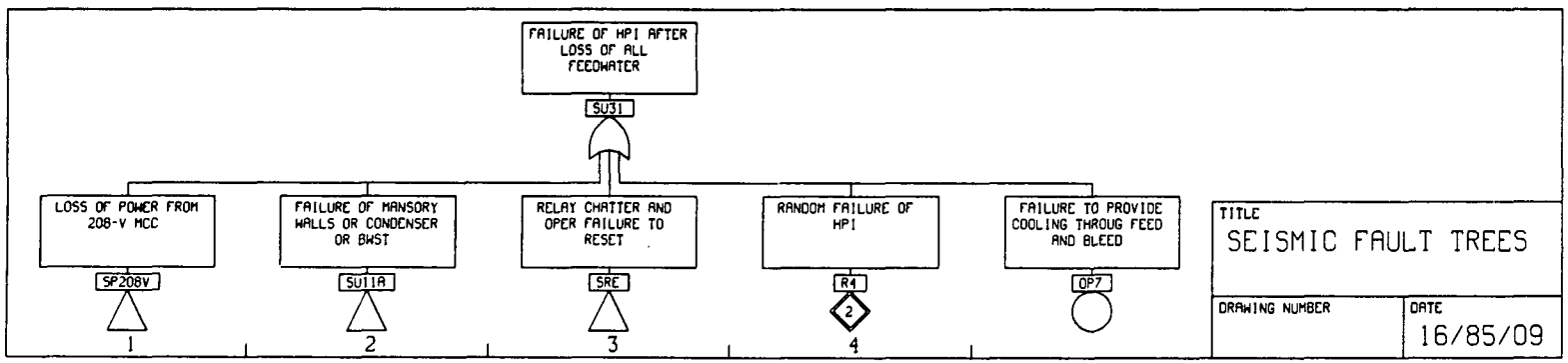
FAILURE OF HPI AFTER LOSS OF ALL FEEDWATER
SU31
LOSS OF POWER FROM 208-V MCC
SP208V
1
FAILURE OF MANSORY WALLS OR CONDENSER OR BWST
SU11A
2
RELAY CHATTER AND OPER FAILURE TO RESET
SRE
3
RANDOM FAILURE OF HPI
R4
2
4
FAILURE TO PROVIDE COOLING THROUG FEED AND BLEED
OP7
TITLE
SEISMIC FAULT TREES
DRAWING NUMBER
DATE
16/85/09

APPENDIX G

A REVIEW OF THE MODELING OF FIRE PHENOMENA AND THE ESTIMATION OF FIRE FREQUENCIES IN THE OCONEE UNIT 3 PROBABILISTIC RISK ASSESSMENT

FOR

BROOKHAVEN NATIONAL LABORATORY

BY

BATTELLE COLUMBUS LABORATORIES

SEPTEMBER 1985

FINAL REPORT

1.0 Introduction

At the request of Brookhaven National Laboratory, Battelle Columbus Laboratories has reviewed Section 9.3 and Appendix M of the NSAC-Duke Power Company-sponsored probabilistic risk assessment (PRA) of the Oconee Unit 3 nuclear power plant; that section and appendix present the analysis of risks arising from fires within the plant areas. This report presents the findings of our review, which concentrated on the estimation of the frequency of fires and the modeling of the associated phenomena.

It is recognized in this review that the fire-risk analysis was performed as one element in the overall PRA, and forms a comparatively small part of that study. The authors of the analysis themselves recognize that several simplifying assumptions and limitations exist in the analysis; these are listed in table 9-17 of the Oconee Unit 3 PRA report, which is presented as table 1 of this report for information.

This review has considered the methods used in the fire-risks analysis for the identification of critical locations and the frequency of fire hazards, and the modeling of fire growth and suppression phenomena. As a result, we have estimated the potential effect of the principal limitations of the analysis.

It should be noted that many limitations are known to exist in the tools and methods presently used in fire-risk analyses--these are considered to be limitations in the state-of-the-art of fire analysis. Particularly the computer code, COMPBRN, used in all analyses performed to date to model

the growth of fires with time, is known to contain many simplifications, most but not all of which are conservative. These limitations have been published in previous reviews of fire-risk analyses, such as that performed by Brookhaven National Laboratory of the Limerick Generating Station Severe Accident Risk Assesement (NUREG/CR-3494, July 1984). These somewhat generic limitations will not be repeated in this review; rather, readers are recommended to read the appropriate sections of NUREG/CR-3494, such as section 2.2.1, Deterministic Fire Growth Modeling.

It is recognized that the assumptions and models used in the probabilistic fire modeling effort are of varying degrees of importance and subsequent consequences on the overall plant risk. There is no reanalyis of the fire modeling performed for the Oconee PRA. Rather, this effort is aimed at identifying potential problem areas in the analysis, and then attempting to provide the relative weight of each point in relationship to the frequency of core damage. A list of those areas which could represent nonconservative, inconsistent, or missing data or models which could have a significant impact on the plant risk has been prepared.

Summary of Findings

Overall, we judge that the core-damage frequency of fires is within a factor of four higher to eight lower of that which would be calculated by more extensive and detailed phonemena analyses. Within the state-of-the-art, such an agreement is considered comparatively close, and quite within the ranges of uncertainty expected with an analysis of this kind.

An apparent omission of the study was its lack of consideration of fires in the turbine building. Unlike most other nuclear power plants, the Oconee site has one turbine building for all 3 units, and which contains several systems considered in the internal-events portion of the PRA. These include the instrument- and service-air systems (common to all units), the main and emergency feedwater systems, and the high- and low-pressure service-water systems. Accident sequences involving fires in the turbine building are not expected to dominate the fire risk, and are probably negligible.

Beyond these omissions, we find that the analysis has been performed in a manner consistent with other probabilistic fire-risks analyses, and the results are also consistent with those in other studies.

2.0 Review Comments

This section reports the review findings for each of the following areas:

- identification of critical locations
- frequency of fire hazards
- modeling assumptions relative to plant layout
- fire growth and suppression modeling
- effect of fire related phonemena on core-melt frequency.

2.1 Identification of Critical Locations

Critical locations for analysis in the fire risks analysis were reportedly selected on the basis of judgment by the analysts; no systematic survey of plant areas is presented in the study.

The two critical locations identified in the analysis are both located in the Unit 3 auxiliary building and are places where extensive cable damage could result in failure to maintain vessel inventory and cooling. The first location is the vertical cable shaft that extends from elevation 796' to elevation 833', and provides routing for cables to the equipment room and the cable room beneath the Unit 3 control room. The second location identified as critical is in the Unit 3 equipment room where, along one wall, many cables associated with safety-related equipment are located.

In addition to these locations, we have identified the turbine building as an area that may potentially be important from the fire-risks perspective. There are several systems located in this building, common to all three units of Oconee, that are important to safety. Specifically, they include the mutually redundant, though well-separated instrument-air and service-air systems, the main and auxiliary feedwater systems, and the high- and low-pressure service water systems. Of these, the two air systems and the high-pressure service water system are shared by systems for all three units.

Other parts of the review of the Oconee Unit 3 PRA have identified total loss of air systems as an important contributor in the internal-events analysis. The normal mode of operation is for the station instrument-air

system to provide control-air supplies to the pneumatically operated valves in the safety-related systems. Should it fail, supplies are automatically switched from the service-air system by a biased pneumatic valve on loss of air pressure. In the event of a fire in the turbine building it is conceivable that the instrument-air system compressors may fail (either due to mechanical or electrical damage) and the change-over valve fails because of fire damage. There is a manual valve connected in parallel with the pneumatic change-over valve located in the turbine building, but access to it may be limited during the postulated fire. The service-air system, while also located in the turbine building, is well separated from the instrument-air system (both in distance and by intervening equipment) that a fire that engulfs both is considered unlikely.

The effects of loss of the station high-pressure service-water pumps are mitigated by the presence of a large header/storage tank outside the station that would passively supply water to the high-pressure service water system (a principal duty of which is the fire-suppression system). In addition, one high-pressure service-water pump is contained within a fire-protected enclosure in the turbine building. The effect of turbine-building fires on the high-pressure service-water system's safety functions is considered small.

In addition, total loss of the Unit 3 low-pressure service-water cooling due to fires is considered very unlikely. In the event of loss of the Unit 3 low-pressure service-water pumps as a result of fire damage, connections to Units 1 and 2 low-pressure service-water system and the high-pressure service-water system are available.

The overall frequency of fires in turbine buildings has been found in other studies (e.g. Limerick Severe Accident Risk Assessment) to be about 0.012 per reactor year. However, only a small fraction of such fires would have any potential to cause major failures . In addition, any vulnerable areas in the turbine building would be limited. As such, we judge that the frequency of fires in the turbine building is about 10-5/reactor year, based on only 10% of the fires being large fires and only 1% of possible fire locations being important to safety. Assuming that this is the frequency of disabling the compressed air system, and giving credit for operator actions to supply feedwater from the safe shutdown facility or to peform "feed and bleed" operations, the contribution to core damage frequency is less than 10-6 per year.

2.2 Frequency of Fires

The initial estimation of the overall frequency of fires at Oconee Unit 3 followed the same type of analysis, and used the same database as other fire-risks analyses. The results of this process, which in essence is to divide the number of reported power-plant fires by the number of U.S. reactor years of operational experience, therefore are in agreement with other similar studies, and are judged reasonable.

This initial estimation was used in the Oconee study as a prior distribution for a two-stage Bayesian analysis to develop a plant-specific frequency distribution, using the plant experience at the time of the study, of zero fires in 4.6 reactor years. This results in a mean frequency of 2.3

x 10-2 for the posterior distribution compared with prior distribution of 4.1 x 10-2 per year.

Subsequent to the analysis for Oconee Unit 3, a fire did occur there. This fire occurred in May 1983 with Unit 3 at 100% power; it was caused by welding activities resulting in a high ground current level in a cable, which then caught fire. As a consequence, four engineered-safeguards valves failed in their non-ES position. This event is reported in Oconee Unit 3 Licensee Event Report 83-007, Revision 1.

Adding in the subsequent experience of one fire yields an overall fire frequency of approximately 4 x 10-2 per year.

In order to subdivide the frequency of fires occurring in the auxiliary building, the Oconee study pessimistically assigned a conditional likelihood of the fire being in the equipment room as 0.16 (mean value of a lognormal distribution); the same value was used for the cable shaft. Compared with other methods for subdividing building fires to particular rooms (for example, on the basis of the relative mass of combustible material), this value is judged pessimistic. (In comparison, the frequency of fires in the cable room estimated in the Oconee study is approximately double that assessed for the equivalent location in the Limerick Generating Station Severe Accident Risk Assessment. From visits to both plants, it is judged that similar masses of cables are present in both locations.) Overall, we believe that the frequencies of fires in the two critical locations are within a factor of 2 lower than those calculated in the study.

2.3 Modeling Assumptions Relative to Plant Layout

The major assumptions made relative to the conditions found in the plant are identified in those case were it is believed that such assumptions are potentially misleading. We recognize that this is a negative way of presenting the material since those assumptions that were made and believed to be valid are not explicitly identified. However, in order to provide the information in the most concise manner this is the method of presentation adopted for use in this report. Assumptions which are not identified below can be assumed to be found reasonable by the review team. In assessing the effect of each point on the fire modeling the equation for the frequency of large fires is examined:

$$F_1 = FAUX \cdot P_{ER} \cdot P_{s,ER} \cdot Q_{ER}(tG) \qquad (1)$$

where

F_1 : Frequency of large fires

F_{AUX} : Frequency of auxiliary-building fires

P_{ER} : Fraction of fires in the equipment room

$P_{s,ER}$: Fraction of fires that are large and in the critical locations

$Q_{ER}(tG)$: Probability that a fire grows and is not suppressed

Implicit Assumptions About the Rate of Fire Growth

The location of fuel sources and the ability of a fire to cause a large or small LOCA is dependent on the rate at which a fire is spreading.

The rate of fire growth is a function of the fuel source which is available for ignition. This can be addressed in one of two ways. First, the fraction of fires that are large and in the critical areas can be modified to account for increased or decreased growth rates by increasing or decreasing the critical area by an appropriate amount. Secondly, a probabilistic analysis can be perfomred to include these effects in the mean growth time, t_g. The increase in the critical area or the decrease in the growth is not expected to be significant because of the good housekeeping procedures and the relatively small probaility of an explosion, or extremely rapid burn, taking place.

Mechanical Failure of Valves

The location of the fuel source to the appropriate valve and the rate of fire spread could both potentially lead to the mechanical failure of the valve either to large strain effects or the melting of seal material. Thus the location of fuel sources is critical to the determination of mechanical valve failure.

This event is not expected to have a significant influence because there are no pumps or valves located in the equipment room and the auxiliary and turbine buildings have alternate and backup routing systems for the safety critical components. The largest effect would be in the containment structure for which no results are available.

Location Of Fuel Sources

The location of combustible materials for the design of the plant does not appear to present any problem. However, the material and structures, which are used during plant maintenance and are easily relocated, do have a potential for affecting the results of the probabilistic fire analysis. There are many such instances in the turbine and auxiliary buildings with the following three fuel sources being the most significant: temporary wood work platforms, oil-storage facilities, and resin containers with ammonium nitrates. Additionally, two potential ignition source which are movable are the welding machines and pipe leakage onto the electrical circuitry.

The effect of additional fuel sources on the calculated results enters into the expression for the probability that a fire grows and is not suppressed. Since this probability is already approximately equal to 0.75 (Section 9.3.3.5) the change in the growth time (even to zero) is at most 1.25, assuming the exponential model.

2.4 Fire-Growth and -Suppression Modeling

The physical model used for the fire growth calculations, COMPBRN, is a relatively simple fire model that accounts for fires spreading. While it can be argued that the uncertainties inherent in the fire process do not justify the added complexity of a more detailed fire model it is also true that there is little justification for introducing additional uncertainties which cannot be quantified by using a model which does not account for the individual processes in an accurate fashion. Therefore, the following points are made about the fire-model computer code and its interaction with the suppression modeling.

Upper Layer Calculations

The version of COMPBRN used in the Oconee probabilistic fire model does not accurately account for layer effects in the upper portions of the room. The temperature differential between the gases will have an effect on the smoke detector response times. These upper-layer effects enter in some of the other points made below.

Smoke Effects

The effect of the smoke is crucial from two standpoints: (1) the interaction of the smoke with the heat transfer and (2) the smoke dispersion relative to the detector locations. In the case of the areas of concern at Oconee, fire detection is primarily by means of smoke detectors. For example, six detectors are located in the Unit 3 cable room (Table 9.5-1, Oconee FSAR). Hence, it is judged unlikely that smoke will interfere with fire detection; it will rather increase the likelihood of detection.

Loss of Fire-Suppression Capability

The analysis does not consider the possibility of the fire reaching a stage at which the energy release exceeds the capacity of the fire suppression system. This can occur for two reasons: (1) the fire grows unchecked for a long enough period of time that the fire suppression system cannot remove sufficient amounts of energy from the compartment to contain the fire; or, (2) the fire causes an explosion or rapid pressure increase that ruptures or incapcitates the suppression. One of the limits to the analysis which has been performed is that the availability of fuel sources has only been considered from a implicitly imposed viewpoint. Movable sources are not directly addressed and thus such rapid releases of energy are not considered.

Flashover

The phenomenon of flashover is not a well understood process, however it is also poorly modeled in COMPBRN. To insure that the critical components to a safe shutdown of the reactor are not damaged during a fire it is necessary to investigate this phenomena more closely.

Fire Doors and Accessways

While the effect of open fire doors is more properly a topic for human reliability analysis it is worthwhile to investigate the effect of doors being left open on the results to assess their importance to the subsequent consequences of a fire. Additionally a model better able to address the vents and openings that can either provide oxygen to the fire or carry combustible material out of or into the compartment as airborne particles should be examined further.

Toxic Gas Production

It is necessary to assess the production of toxic gases to correctly determine the actual response to a fire by plant personnel. In addition there is evidence that corrosive gas releases can affect circuitry up to

40 feet from the fire. This results in a nonconservative assumption which can also feedback to the calculation of the frequency of fires occurring in the fire critical area, discussed above.

Effect of COMPBRN Assumptions On Core Melt Frequency

In terms of equation (1) there are two ways in which the modeling assumptions in COMPBRN can affect the results of the calculation of the core melt frequency. The first is on the probability that a fire grows and is not suppressed and the second is on the fraction of fires which are large and in the critical locations.

The interaction of the growth model and the suppression model implicitly assumes, as is standard practice in all fire risk analyses, that the fire growth and fire suppression models act independently of each other. This not only has an effect on the physical modeling of the fire but on the probabilistic calculations when variables are assumed to be independent.

The upper layer calculations can affect the modeling in two ways. Either the upper layer temperature increases more quickly than COMPBRN predicts or the upper layer reflects heat (due to smoke and gas generation) back into the room. In the first instance the detection and suppression systems, if they are operational, will detect the fire more quickly and lessen the effect of the fire on the core melt. Because of the short time for growth this will be a minor effect. The second possible response is the more important one. This is because if the upper layer acts as a shield for the detection system then the mean time to detection, and thus activation of the suppression system, increases. If the probability that a fire grows and is not suppressed, Per, is set to its upper limit of 1.0 then the maximum effect that the upper layer effects can have on the core melt frequency is to increase the probability by a factor of 1.6; this is an upper bound.

On the other hand, the generation of smoke may alternate the heat transfer from the flames to the cables. The effect of interfering with the heat

transfer can be simply illustrated. Equation M-5 of the Oconee study identifies that the time to ignition (or failure for components), t*, is given by:

$$t^* = \frac{\pi}{4\alpha} \frac{k(T^* - T_o)^2}{\dot{q}_o''}$$

where qo" is the heat flux impinging on the object. Smoke between the pilot fire and the object will reduce the heat flux that strikes the object. An opacity of 50% will increase t* by a factor of 2. Using the Electrical Equipment Room as an example, the mean time for propagation of fire to the uppermost tray of cables is 9.3 minutes (Section 9.3.3.3). The heat transfer is both radiative and convective, however, so an opacity of 50% would yield an upper bound increase in the fire-propogation time of 2, to 19 minutes. Such an increase would increase the likelihood of detection and suppression from 0.38 to approximately 0.7. In addition, a somewhat larger pilot fire is required.

Considerable uncertainty exists in the expected opacity of smoke however, since this would depend on the specific material in the fires. The materials considered in the Oconee study (oil, cable insulation) however, do produce significant smoke. For the purposes of this review, a factor of 2 increase in the time for propagation (and hence a factor of 2 decrease in the accident-sequence frequencies) is considered suitable for illustration.

Another manner in which an even relatively small fire can affect the safety system cabling is in the generation of corrosive gases which can short out equipment without generating sufficient heat to trip the detection system. In this case of Oconee, where multiple smoke detectors are installed, this is considered a small concern.

The one area in which the assumption that the fire growth and fire suppression are independent, can have a significant effect on the calculation of the core melt frequency is in the calculation of the probability that the fire is large and near a critical location, Ps,er. This probability is determined from several assumptions, two of which are critical for the current discussion:

1. The critical area constitutes a small fraction (about one-tenth) of the total floor area of the electrical equipment room.
2. A significant fraction (about one-tenth) of the cable insulation fires reported . . . were estimated to be large fires.

Because the interaction of the growth and suppression models can increase the critical area in the equipment room this probability could be non-conservative. In addition the effect of the combination of the upper layer effects, corrosive gas generation, flashover and longer times to detection can lead to the definition of large fires being modified so that 400 BTU fires are not lower bound fires. While it is outside the scope of this review to develop a more detailed model to assess the effects of such synergestic effects it is judged that these two simplistic modeling assumptions could cause the frequency of large fires in critical areas to be optimistic by a factor of 2-4.

SUMMARY

The overall plant fire risk analysis performed for the Oconee nuclear power plant appears to be a reasonable first approximation based on the results of the review to date with the exception of the limitation of fire risk areas being limited to the auxiliary building, specifically the equipment room and cable spreading area.

Table 2 summarizes the various factors that have been identified in the review, together with an expected range of effect on the accident frequencies -- these effects have been applied to the overall mean frequency of core damage due to fires, to provide the range within which a more detailed study would be expected to yield results. This range is from 2.5 x 10-6 to 8 x 10-5 per reactor year based on the overall mean frequency calculated in the Oconee 3 PRA of 1 x 10-5 per reactor year.

Table 1
Fire-Analysis Limitations

Limiting factor	Comment
Probability of specific locations of fires	Based on a review of data and an analysis of the specific areas in relationship to the entire auxiliary building. Considerable analyst judgment involved.
Locations of critical fires	Based on review of systems, areas, and locations of important equipment. The areas identified as important may not be the only ones that could result in fire risk.
Cable routings	A great deal of uncertainty since detailed information was not available. A number of conservative assumptions had to be made concerning vital equipment.
Failure modes	Hot-short calculations used to identify probability of spurious actuation are heavily influenced by analysts' judgment. Detailed data do not exist.
Fire growth	Fire progagation is based on physical models, and there are large uncertainties about the results of these models. The analysis included consideration of, but not direct data from, tests on Oconee interlocked armor cable.
Fire suppression	Fire suppression is based on industry-wide data and is not necessarily directly representative of the actual characteristics of the fire areas of concern.
Operations staff effects	Errors of commission by the control-room operators as instigated by failures in the instrumentation circuits were not analyzed explicitly. It was judged that the loss of function from fires in the critical areas envelops these potential human errors.
Smoke progagation	The effects of smoke on the operations staff were not analyzed explicitly.
Flooding from fire-suppression activities	The effects of flooding from fire-fighting activities were not analyzed explicitly.

Table 2
Summary of Review

Finding	Potential Effect on Sequence Frequencies (ranges)
1. Frequency of fire in identified zones	x 0.5 to x 1.0
2. Additional fuel sources	x 1 to x 1.25
3. Upper-layer shielding of detectors	x 1 to x 1.6
4. Effect of smoke opacity of propogation	x 0.5 to x 1
5. Assumptions of synergism of areas and fraction of large fires	x 1 to x 4

NRC FORM 335 (2-84) NRCM 1102, 3201, 3202

U.S. NUCLEAR REGULATORY COMMISSION

BIBLIOGRAPHIC DATA SHEET

SEE INSTRUCTIONS ON THE REVERSE.

1. REPORT NUMBER (Assigned by TIDC, add Vol. No., if any)
NUREG/CR-4374, Vol. 2
BNL-NUREG-51917

2. TITLE AND SUBTITLE
A Review of the Oconee-3 Probabilistic Risk Assessment: External Events, Core Damage Frequency

3. LEAVE BLANK

4. DATE REPORT COMPLETED
MONTH: January | YEAR: 1986

5. AUTHOR(S)
N. A. Hanan, D. Ilberg, D. Xue, R. Youngblood, J. W. Reed, M. McCann, T. Talwani, J. Wreathall, P. D. Kurth, K. Bandyopadhyay, C. Costantino

6. DATE REPORT ISSUED
MONTH: March | YEAR: 1986

7. PERFORMING ORGANIZATION NAME AND MAILING ADDRESS (Include Zip Code)
Brookhaven National Laboratory
Upton, New York 11973

8. PROJECT/TASK/WORK UNIT NUMBER

9. FIN OR GRANT NUMBER
FIN A3797

10. SPONSORING ORGANIZATION NAME AND MAILING ADDRESS (Include Zip Code)
Division of Safety Review and Oversight
Office of Nuclear Reactor Regulation
U.S. Nuclear Regulatory Commission
Washington, DC 20555

11a. TYPE OF REPORT
Technical

b. PERIOD COVERED (Inclusive dates)

12. SUPPLEMENTARY NOTES

13. ABSTRACT (200 words or less)

A review of the Oconee-3 Probabilistic Risk Assessment (OPRA) was conducted with the broad objective of evaluating qualitatively and quantitatively (as much as possible) the OPRA assessment of the important sequences that are "externally" generated and lead to core damage. The review included a technical assessment of the assumptions and methods used in the OPRA within its stated objective and with the limited information available. Within this scope, BNL performed a detailed reevaluation of the accident sequences generated by internal floods and earthquakes and a less detailed review (in some cases a scoping review) for the accident sequences generated by fires, tornadoes, external floods, and aircraft impact.

14. DOCUMENT ANALYSIS – a. KEYWORDS/DESCRIPTORS

Nuclear power plant
Oconee Unit 3
Probabilistic risk assessment (PRA)
core damage frequency
reliability
operating experience

b. IDENTIFIERS/OPEN-ENDED TERMS

15. AVAILABILITY STATEMENT
Unlimited

16. SECURITY CLASSIFICATION
(This page) Unclassified
(This report) Unclassified

17. NUMBER OF PAGES

18. PRICE

UNITED STATES
NUCLEAR REGULATORY COMMISSION
WASHINGTON, D.C. 20555

OFFICIAL BUSINESS
PENALTY FOR PRIVATE USE, $300

SPECIAL FOURTH-CLASS RATE
POSTAGE & FEES PAID
USNRC
WASH. D.C.
PERMIT No. G-67