UNITED STATES ENVIRONMENTAL PROTECTION AGENCY
REGION IV
345 COURTLAND STREET
ATLANTA, GEORGIA 30365

JUN 18 1984

REF: 4WM-FP

Ms. Elinor G. Adensam
Chief, Licensing Branch No. 4
Division of Licensing
U.S. Nuclear Regulatory Commission
Washington, D.C 20555

re' Watts Bar Nuclear Plant
NPDES No. TN0020168

Dear Ms. Adensam:

Enclosed are the Public Notice, Fact Sheet and Draft Permit we propose to issue to the Tennessee Valley Authority for the referenced facility.

Should you wish to comment, please provide same to us by July 23, 1984.

If you have any questions, please contact me at the above address or calling FTS 257-3012.

Sincerely yours,

Charles H. Kaplan

Charles H. Kaplan, P.E.
Coordinator Thermal Analysis
Facility Performance Branch
Water Management Division

Enclosures

8406270261 840618
PDR ADOCK 05000390
A PDR

C002
1/1

RECEIVED
JUN 25 1984
US NUCLEAR REGULATORY COMMISSION
DOCUMENT MANAGEMENT BR
TIDC

JOINT PUBLIC NOTICE

U.S. Environmental Protection Agency
Region IV
Water Management Division - Facilities Performance Branch
345 Courtland Street, N.E.
Atlanta, Georgia 30365
(404) 881-3544

in conjunction with

Tennessee Department of Health and Environment
T.E.R.R.A. Building, 150 Ninth Avenue, North
Nashville, Tennessee 37203
(615) 741-7883

Public Notice No. 84TNF010 June 21,1984

NOTICE OF PROPOSED REISSUANCE OF
NATIONAL POLLUTANT DISCHARGE ELIMINATION SYSTEM PERMIT(S),
PROPOSED SECTION 316(a) DETERMINATION,
AND NOTICE OF CONSIDERATION FOR STATE CERTIFICATION

The U.S. Environmental Protection Agency (EPA) proposes to reissue a National Pollutant Discharge Elimination System (NPDES) Permit to the Tennessee Valley Authority, Knoxville, Tennessee 37902, for its proposed Watts Bar Nuclear Plant, Rhea County, Tennessee, NPDES Number TN0020168. The permit application describes two discharges (plus 12 internal monitoring points) from construction and operation of the facility which will generate and transmit electricity, SIC Code 4911. Discharges will enter the Tennessee River in the vicinity of River Mile 527.8 and an unnamed tributory of Yellow Creek. These reaches have been classified by the State of Tennessee as follows: Tennessee River for all uses and Yellow Creek for fish and aquatic life, recreation, irrigation, and livestock watering and wildlife.

The proposed NPDES permit contains limitations on the amounts of pollutants allowed to be discharged and was drafted in accordance with the provisions of the Clean Water Act (33 U.S.C. Section 1251 et seg.) and other lawful standards and regulations. The pollutant limitations and other permit conditions are tentative and open to comment from the public. NOTE: The radioactive component of the discharge is regulated by the U.S. Nuclear Regulatory Commission under the requirements of the Atomic Energy Act and not by the Environmental Protection Agency under the Clean Water Act.

The thermal component of the discharge is subject to compliance with the Tennessee Water Quality Standards which contain a maximum temperature criterion of 30.5°C(86.9°F) at the edge of the assigned mixing zone. An application was filed by TVA and a variance to this criterion was granted by EPA and the State of Tennessee at the time of initial permit issuance in 1978 under Section 316(a) of the Act. The 1978, Determination allows discharge of cooling tower blowdown at a maximum temperature of 35.0°C(95.0°F), even when upstream temperatures in Chickamauga Lake approach or exceed 30.5°C(86.9°F). Section 316(a) of the Act allows the Regional Administrator to impose such alternative and less stringent limitations after demonstration that the water quality standards limitations are more stringent than necessary to assure the protection and propagation of a balanced, indigenous population of shellfish, fish, and wildlife in and on the body of water into which the discharge is made. EPA proposes to continue this variance.

Persons wishing to comment upon or object to any aspects of permit issuance or wishing to request a public hearing, are invited to submit same in writing within thirty (30) days of the date of this notice to the Water Management Division, Environmental Protection Agency, 345 Courtland Street, N.E., Atlanta, Georgia, 30365, ATTENTION: Earline Hanson. The public notice number and NPDES number should be included in the first page of comments.

All comments received within the 30-day period will be considered in the formulation of final determinations regarding the permit(s). Any interested person may within the 30-day period request a public hearing. Where there is a significant degree of public interest in the proposed permit reissuance, the EPA Regional Administrator will hold a public hearing.

After consideration of all written comments and the requirements and policies in the Act and appropriate regulations, the EPA Regional Administrator will make determinations regarding the permit issuance. If the determinations are substantially unchanged from those announced by this notice, the EPA Regional Administrator will so notify all persons submitting written comments. If the determinations are substantially changed, the EPA Regional Administrator will issue a public notice indicating the revised determinations. Requests for evidentiary hearing may be filed after the Regional Administrator makes the above-described determinations. Additional information regarding an evidentiary hearing is available in 40 CFR 124, Subpart E, 48 FR 14278 (April 1, 1983), or by contacting the Office of Regional Counsel at the address above or at (404) 881-3506.

The administrative record, including application, fact sheet and/or statement of basis, draft permit, a sketch showing the exact location of the discharge(s), comments received, the additional information on hearing procedures is available at cost by writing the EPA address above, or for review and copying at 345 Courtland Street, N.E., 3rd floor, Atlanta, Georgia, between the hours of 8:15 a. m. and 4:30 p.m., Monday through Friday. Copies will be provided at a cost of 20¢ per page.

The Tennessee Department of Health and Environment has been requested to certify the discharge(s) in accordance with the provisions of Section 401 of the Clean Water Act (33 U.S.C. Section 1341). Comments on issuance of certification, including a request for public hearing, must be submitted to the state agency address above within thirty (30) days of the date of this public notice. If a public hearing is held, as described above, the state agency will co-chair the hearing in order to receive comments relative to state certification.

Please bring the foregoing to the attention of persons who you know will be interested in this matter.

###

UNITED STATES ENVIRONMENTAL PROTECTION AGENCY

REGION IV

345 COURTLAND STREET
ATLANTA, GEORGIA 30365

FACT SHEET

APPLICATION FOR NATIONAL POLLUTANT DISCHARGE ELIMINATION SYSTEM PERMIT TO DISCHARGE TREATED WASTEWATER TO U.S. WATERS

Application No. TN0020168 Date June 21, 1984

1. SYNOPSIS OF APPLICATION

a. Name and Address of Applicant

Tennessee Valley Authority Environmental Quality Staff Knoxville, Tennessee 37902	FOR	Watts Bar Nuclear Plant Units 1 and 2 Rhea County, Tennessee

b. Description of Applicant's Operation

Generation, transmission and distribution of electricity generally falling under Standard Industrial Classification 4911. Plant fuel is nuclear.

c. Production Capacity of Facility

Number of Units - 2
Largest Unit (megawatts) - 1270
Nameplate rating (megawatts) - 2540
Date of commercial operation - 1985 (Unit 1) and 1987 (Unit 2)

Applicant's Receiving Waters

d. Serial 001 (including internal Serial Numbers 102, 103, 104, 105, 106, 107, 108, 109, and 110) enters Chickamauga Lake on the Tennessee River in the vicinity of river mile 527.8. Serial 112 (including internal Serial Numbers 111, 113 and 114) enters an unnamed tributary of Yellow Creek.

For a sketch showing the location of the discharge(s), see Attachments A and B.

e. Description of Existing and Proposed Pollution Abatement Facilities

Sedimentation and/or Best Management Practices Control of site runoff; secondary treatment of domestic wastes (110 and 111); neutralization and/or sedimentation of most plant operating wastes (102, 103, 107, 108, 112, 113, and 114); filtration (105) and neutralization, sedimentation, filtration and evaporation (104); and off stream cooling for the thermal component of the discharge.

f. Description of Discharges (as reported by applicant).

I. Serial 101 - Plant Diffuser discharge (includes wastes generated during plant construction and operation - Serials 102, 103, 104, 105, 106, 107, 108, 109, and 110).

Avg. Flow Range m^3/Day (MGD) - 109,000 to 193,000 (28.8 to 51.1)*
Avg. Winter Temperature °C(°F) - 21.1(71.0)-Original applic.
Avg. Summer Temperature °C(°F) - 31.4(88.5)-Original applic.
pH Range (std. units) - 6.1 to 8.8

Pollutants which are present in significant quantities or which are subject to effluent limitation are as follows:

Effluent Characteristic	Expected Load
Total Chlorine Residual (mg/l)	0.1 Maximum
Maximum Instantaneous Discharge Temperature °C(°F)	35.0(95.0)

II. Serial 112 - Runoff Holding Pond effluent (includes site runoff, treated domestic wastes, washing wastes from the concrete batch plant, and wastes from a vehicle wash rack - Serials 111, 113 and 114).

Average Flow m^3Day (MGD) - 2100(0.56) includes variable runoff
Average Winter temperature °C(°F) - Not provided
Average Summer temperature °C(°F) - Not provided
pH Range (std. units) - 4.0 to 10.4

Pollutants which are present in significant quantities or which are subject to effluent limitation are as follows:

Effluent Characteristic	Expected Load	
	Avg	Max
Total Suspended Solids Range (mg/l)	24	176
Turbidity Range (JTU)	25	200

*Two Units in Operation

NOTES: 1. Serial Numbers 102-110, 111, 113, and 114 are internal Serials assigned for identification, limitations, and monitoring since compliance with effluent limitations can not be demonstrated after combination of waste streams.

2. Incomplete data is available for most internal Serial Numbers since the plant is not yet in operation.

2. PROPOSED EFFLUENT LIMITATIONS

See attached draft permit pages I-1 throught I-16.

3. MONITORING REQUIREMENTS

See attached draft permit pages I-1 throught I-16.

4. PROPOSED COMPLIANCE SCHEDULE FOR ATTAINING EFFLUENT LIMITATIONS.

See attached draft permit page I-17.

5. PROPOSED SPECIAL CONDITIONS WHICH WILL HAVE A SIGNIFICANT IMPACT ON THE DISCHARGE

a. See attached draft permit pages III-1 through III-4.

b. Toxic and Priority Pollutants (Parts III. B. and N.). Although some priority pollutant data has been submitted for wastes generated during construction and for discharges at other operating Nuclear Power Plants in the TVA System, data on operating wastes are not yet available since the plant is presently under construction. Part III. N. requires that data be submitted within one year of the commercial operation date of each unit. A reopener clause is included (Part III. B.) in the event that new, and more stringent, limitations are promulgated during the permit term. No unacceptably high levels of toxic or priority pollutants are expected from this plant based on data from other facilities.

c. Polychlorinated biphenyl compounds (Part III. C.). Discharge is prohibited in accordance with 40 CFR 423.12(b)(2). Monitoring has been required for Serials 102 and 103.

d. Compliance with Tennessee Water Quality Standards Requirements (Parts III. D., E., F., G., J., and K.).

I. Biocides (Part III. D.) - Use of any new biocide or chemical which may be toxic to aquatic life must be reported to EPA. Effluent limitations and monitoring requirements would be imposed should this be necessary.

II. Effluent Diffuser design and monitoring (Part III. E. and Serial 101). A ten to one dilution is required to meet thermal mixing zone requirements and instream criteria for total residual chlorine.

III. Instream monitoring (Parts III. F. and G.). Preoperational and postoperational monitoring of aquatic life and specific chemical parameters (both intake and discharge) is required.

IV. Flow restrictions (Part III. J.). Discharge through the plant diffuser system is prohibited when discharges from Watts Bar Dam are less than 3,500 cfs. Lower flows will not assure compliance with instream thermal and chemical criteria.

V. Chlorine evaluation practices (Part III. K.). Numerous flow pathways, flow rates and plant operating conditions may result in excess discharges of total residual chlorine if proper controls are not maintained. An evaluation is required to assure the permittee's ability to comply with the 0.10 mg/l limitation. If necessary, dechlorination facilities are to be installed before May 31, 1985. This deadline is consistent with the permittee's use of chlorine in the cooling systems only at temperatures above 15.6°C(60°F).

e. Erosion and Sediment Control (Part III. I.). A best management practices control plan is required to assure that excessive siltation to onsite creeks and the Tennessee River do not occur.

f. Flow measurement devices (III. L.). Assurances are required that all flow measurement devices are properly installed, calibrated, maintained, and operated to accurately determine plant discharge rates.

g. Alternate flow pathways (III. M.). This requirement is included to assure that alternate discharge pathways are used only when absolutely necessary.

6. WATER QUALITY STANDARDS AND EFFLUENT STANDARDS APPLIED TO THE DISCHARGE

a. Applicable Regulations

I. Federal performance standards for existing sources for the steam electric power generating point source category (40 CFR 423) as promulgated on November 19, 1982. The proposed conditions provide for "best practicable control technology currently available" (BPT) and "best available technology economically achievable" (BAT) for chemical wastes and off stream cooling for the thermal component. In the absence of promulgated regulations covering "best conventional technology" (BCT) for conventional pollutants, a best professional judgement determination has been made that for the purposes of this permit, BCT shall be equal to BPT. Only concentration limitations have been provided in lieu of mass limitations in accordance with provisions of 40 CFR 423.12(b)(11) and 423.13(g).

II. Tennessee Water Quality Criteria, Chapter 1200-4-3, amended October 22, 1982, and proposed revisions published on October 15, 1983. The receiving waters have been classified by the State of Tennessee as follows: Tennessee River - all uses and Yellow Creek - Fish and Wildlife, Recreation, Irrigation, and Liverstock Watering and Wildlife.

III. Tennessee Effluent Limitations and Standards, Chapter 1200-4-5, effective December 26, 1977.

NOTE: The radioactive component of the discharges from the Liquid Radwaste System is regulated by the U.S. Nuclear Regulatory Commission under the requirements of the Atomic Energy Act and not by the Environmental Protection Agency under the Clean Water Act.

b. Effluent Limitations

I. Serial 101 - Diffuser discharge (includes construction and testing related wastes and rainfall runoff and will ultimately contain plant operating wastes; i.e., Yard Holding Pond effluent - Serial 102, Liquid Radwaste System effluent - Serial 104, alternate discharge pathway for treated Condensate Demineralizer wastes - 105, Steam Generator Blowdown - Serial 106, alternate discharge pathway for Neutral Waste Tank effluent - Serial 109, Sewage Treatment Plant effluent - Serial 110, and Cooling Tower blowdown).

A. Temperature. A temperature limitation of 35.0°C(95.0°F) and mixing zone size has been designated based on Tennessee Water Quality Standards requirements and a Determination made in 1978 under Section 316(a) of the Clean Water Act (the Act). The thermal component of the discharge is subject to compliance with the Tennessee Water Quality Standards which contain a maximum temperature criterion of 30.5°C(86.9°F) at the edge of the assigned mixing zone. An application was filed by TVA and a variance to this criterion was granted by EPA and the State of Tennessee at the time of initial permit issuance in 1978 under Section 316(a) of the Act. The 1978 Determination allows discharge of cooling tower blowdown at a maximum temperature of 35.0°(95.0°F), even when upstream temperatures in Chickamauga Lake approach or exceed 30.5°C(86.9°F). Section 316(a) of the Act allows the Regional Administrator to impose such alternative and less stringent limitations after demonstration that the water quality standards limitations are more stringent than necessary to assure the protection and propagation of a balanced, indigenous population of shellfish, fish, and wildlife in and on the body of water into which the discharge is made. EPA proposes to continue this variance.

B. Total chlorine residual. A maximum instantaneous discharge limitation of 0.10 mg/l has been proposed consistent with an acceptable level of 0.01 mg/l at the edge of the mixing zone based on Tennessee Water Quality criteria and a ten to one dilution factor to be achieved by the discharge diffuser. TVA has no plans for chlorination of the condenser circulating water (CCW) system. However, both the Raw Cooling Water (RCW) System and the Emergency Raw Cooling Water (ERCW) System are to be chlorinated to a maximum rate of 0.8 mg/l (30.9 lbs/hour maximum total addition rate) during periods when intake temperature exceeds 15.6°C (60°F) to prevent asiatic clam growth in the small diameter piping of these cooling systems.

C. pH. Limitations are provided as required by 40 CFR 423.12(b)(1).

II. Serial 102 - Yard Holding Pond effluent and emergency overflow (includes several sumps and drains with very small waste flows, the Low Volume Waste Treatment Pond effluent (when constructed) - Serial 103, Metal Cleaning Waste Pond effluent - Serial 107, Cooling Tower Desilting Basin effluent - Serial 108, alternate pathway for turbine building sump, and storm water runoff. During periods when releases from Watts Bar Dam are less than 3500 cubic feet per second (cfs), cooling tower blowdown and other plant wastes are also discharged to this pond.

A. Oil and grease and total suspended solids

Limitations provided are for the Low Volume Waste Category (40 CFR 423.12(b)(3)). A best professional judgement has been made that even though storm water runoff is discharged to this pond in addition to infrequent cooling tower blowdown discharges, the small quantity of low volume wastes discharged to this pond will still received adequate treatment. Five small sources which are included in the Low Volume Waste Category are discharged to the Yard Holding Pond for treatment. These sources have a total estimated average flow of less than 136 m^3/Day (0.04 MGD) or 0.11 acre-feet (A-ft) per day and include:

(1). Hypochlorite Building Drains (Note: Building is no longer used for generation of chlorine),
(2). Service Building Sump,
(3). Diesel Generator Building Drains,
(4). Security Diesel Generator Oil and Grease Interceptor (Oil/Water Seperator is provided as pretreatment), and
(5). Condenser Cooling Water Pump Station Sump.

rials 103, 107 and 108) having a

Other low volume wastes (Serials 103, 107 and 108) having a combined average flow of less than 23,000 m^3/Day (6.0 MGD) or 18 A-ft per day are discharged into the Yard Holding Pond after treatment and monitoring. In addition storm water runoff from the Yard Drainage System discharges to the pond for sedimentation during wet weather. During a 10-year, 24-hour rainfall runoff event (4.9 inches of rainfall in a 24-hour period), runoff during the summer would approximate 26 A-ft. A similar winter storm could produce a maximum of 52 A-ft of runoff. Since the pond has a liquid volume of 42 A-ft, the pond volume is almost 380 times the volume of wastes discharged without adequate pretreatment (0.11 A-ft), 2.2 times the normal plant waste flows (18.4 A-ft), 0.95 times the normal plant wastes flows and summer storm and 0.6 times the normal plant wastes and winter storm. This is considered adequate waste treatment for the volume and characteristics of the wastes involved.

B. Limitations for chlorine, pH, and temperature (See rationale for Serial 101) are included during periods when the emergency overflow is in use. As noted above, cooling tower blowdown and other wastes (but not the discharge from the Liquid Radwaste System) may be discharged to Yard Holding Pond when releases from the Watts Bar Dam are less than 3500 cfs, since no discharge from the Plant Diffuser (Serial 101) is allowed during such conditions (See Part III. J.). Approximately 190 A-ft of volume exists in the pond below the elevation of the emergency overflow. This volume is equal to the maximum plant waste flow which can occur from two units in a one-day period (i.e. a 24-hour storage volume at full load). Should low discharge rates from Watts Bar Dam be expected to occur for a few hours, generation of electricity would not be curtailed. However, for longer periods of low-flow release from the Dam, power generation will be terminated. Terms of the permit prohibit power generation during periods of discharge from the emergency overflow (except when discharge results from a significant rainfall event when the pond was already nearly full).

III. Serial 103 - Low Volume Waste Treatment Pond effluent (includes Serial 105 and other low volumes wastes) with an average flow of 2,650 m^3/Day (0.70 MGD) during construction and expected to have an average flow of 10,700 m^3/Day (3.1 MGD) during operation. A 15-million gallon treatment pond is to be constructed for treatment of wastes; however, in the interim an existing five-million gallon pond is to be used. Limitations on oil and grease and total suspended solids are provided as required for the Low Volume Waste Catagory (40 CFR 423.12(b)(3)).

IV. Serial 104. Liquid Radwaste System effluent with an average flow of 7.6 m^3/Day (0.002 MGD) which is expected to increase to 280 m^3/Day (0.074 MGD) when Condensate Demineralizer Waste (Serial 105) is discharged to the System for treatment.

A. Effluent limitations. Limitations on oil and grease and total suspended solids are provided as required for the Low Volume Waste Catgory (40 CFR 423.12(b)(3)).

B. The radioactive component of this discharge is regulated by the U.S. Nuclear Regulatory Commission under the requirements of the Atomic Energy Act and not by the Environmental Protection Agency under the Clean Water Act.

V. Serial 105. Condensate Demineralizer Regeneration Waste with an average expected flow of 280 m^3/Day (0.074 MGD) may be directed to the cooling tower blowdown line if very small quantities of radioactivity are present. This is an alternate discharge pathway to those normally used; i.e., Serial 103 if no radioactivity is present and Serial 104 if radioactivity is present in levels requiring treatment. Limitations are provided as required for the Low Volume Waste Category (See rationale for Serial 104).

VI. Serial 106. Steam Generator Blowdown limitations are provided as required for the Low Volume Waste Category (40 CFR 423.12(b)(3)).

VII. Serial 107. Metal Cleaning Waste Pond effluent with an estimated average flow of 8,700 m^3/Day (2.3 MGD) during infrequent periods of discharge. Limitations on oil and grease, total suspended solids, total iron, and total copper are as provided for the Metal Cleaning Waste Category (40 CFR 423.12(b)(5) and 423.13(e)). Limitations for phosphorus and chemical oxygen demand have been included based on best professional judgement.

VIII. Serial 108. Cooling Tower Desilting Basin effluent with an estimated average flow of 17,000 m^3/Day (4.5 MGD) for short periods following cleaning of the cooling tower basins of accumulated silt. Limitations on total suspended solid are provided as required for the Low Volume Waste Category (40 CFR 423.12(b)(3)). No significant quantities of oil and grease is expected and therefore no limitation or monitoring has been required.

XI. Serial 109. Neutral Waste Tank discharge to the condenser cooling water system. This is an alternate discharge pathway rather than discharge to Serial 103 via the turbine building sump with an estimated average flow of 26 m^3/Day (0.007 MGD). Limitations are provided as required for the Low Volume Waste Category (40 CFR 423.12(b)(3)).

X. Serials 110 and 111. Sewage Treatment Plant effluents. Limitations have been included in accordance with requirements for secondary treatment of domestic wastes (40 CFR 133.102 and Tennessee Effluent Limitations and Standards, Chapter 1200-4-5).

XI. Serial 112. Runoff Holding Pond effluent (includes Serials 111, 113, and 114 and rainfall runoff from an area of about 280 acres). Pending completion of waste treatment ponds for Serials 113 and 114, total suspended solids limitations are provided as required for the Low Volume Waste Category (40 CFR 423.12(b)(3)). Little oil and grease is expected at this Serial and therefor no limitation or monitoring has been required. Due to high pH levels associated with algal growth in warmer months of the year and the discharge of treated domestic waste (Serial 111) upstream of the Pond, no pH limitations or monitoring are provided for Serial 112.

XII. Serials 113 and 114. Treatment Ponds for aggregate washing wastes at the concrete batch plant and for the vehicle wash rack are to be constructed and in operation by November 1, 1984, to provide better treatment of these waste sources (in addition to the Runoff Holding Pond, Serial 112). Limitations on oil and grease, total suspended solids, settleable solids and pH are provided in accordance with requirements of 40 CFR 423.12; Tennessee Effluent Limitations and Standards, Chapter 1200-4-5; and best professional judgement.

c. Proposed Permit Period. Effluent limitations have been included in the draft permit to assure compliance with all promulgated requirements of 40 CFR 423. Additionally, a reopener clause (Part III. B.) has been included in the draft permit should more stringent requirements be promulgated. A five-year permit is proposed.

7. THE ADMINISTRATIVE RECORD, including application, fact sheet and/or draft permit, comments received, and additional information on hearing procedures is available by writing the EPA address above, or for review and copying at 345 Courtland Street, N.E., 3rd floor, Atlanta, Georgia 30365, between the hours of 8:15 a.m. and 4:30 p.m., Monday through Friday. Copies will be provided at a cost of 20¢ per page.

The administrative record contains the following information:

a. The initial application, amendments and supporting data furnished by the applicant,
b. The draft permit,
c. The public notice and fact sheet,
d. All documents cited, herein, and
e. Other documents contained in the supporting file for the permit, including the previous 316(a) determination documentation.

8. EPA CONTACT

Additional information concerning the permit may be obtained at the address and during the hours noted above:

Mrs. Earline Hanson
404/881-3544

9. PROCEDURES FOR THE FORMULATION OF FINAL DETERMINATIONS

a. Comment Period

The Environmental Protection Agency proposes to issue an NPDES permit to this applicant subject to the aforementioned effluent limitations and special conditions. These determinations are tentative and open to comment from the public.

Interested persons are invited to submit written comments regarding permit issuance or the proposed permit limitations and conditions to the following address:

Environmental Protection Agency
345 Courtland Street, NE
Atlanta, Georgia 30365
ATTN: Earlene Hanson

All comments received within thirty (30) days following the date of public notice will be considered in the formulation of final determinations with regard to proposed permit issuance.

b. Public Hearing

The EPA Regional Administrator will hold a public hearing if there is a significant degree of public interest in a proposed permit or group of permits, or if he determines that useful information and data may be obtained thereby. Public Notice of such a hearing will be circulated at least thirty days prior to the hearing.

c. Issuance of the Permit

After consideration of all written comments and of the requirements and policies in the Act and appropriate regulations, and, if a public hearing is held, after consideration of all comments, statements and data presented at the hearing, the EPA Regional Administrator will make determinations regarding the permit issuance. If the determinations are substantially unchanged from the tentative determinations outlined above, the Regional Administrator will so notify all persons submitting written comments, and, if a public hearing was held, all persons participating in the hearing. If the determinations are substantially changed, the EPA Regional Administrator will issue a public notice indicating the revised determinations.

Unless a request for an evidentiary hearing is granted, the proposed permit contained in the Regional Administrator's determinations shall become issued and effective and will be the final action of the U. S. Environmental Protection Agency.

d. Evidentiary Hearing

If the determination are substantially unchanged, any interested person may submit a request for an evidentiary hearing on the permit and its conditions within thirty (30) days of the receipt of the notice described in section c. If the determinations are substantially changed, any interested person may submit a request for an evidentiary hearing within thirty days of the date of the public notice or of the date of becoming aware of the determinations, which ever comes first. Such requests will be within the time period if mailed by Certified Mail within the thirty day period to the Regional Hearing Clerk, Environmental Protection Agency, 345 Courtland Street, N.E., Atlanta, Georgia 30365. All requests must contain:

(1) The name, mailing address and telephone number of the person making such request;

(2) A clear and concise factual statement of the nature and scope of the interest of the requester;

(3) The names and addresses of all persons whom the requester represents; and

(4) A statement by the requester that, upon motion of any party, or sua sponte by the Presiding Officer and without cost or expense to any other party, the requester shall make available to appear and testify, the following:

(i) The requester;

(ii) All persons represented by the requester, and

(iii) All officers, directors, employees, consultants and agents of the requester and the persons represented by the requester.

(5) Specific references to the contested permit terms and conditions, as well as suggested revised or alternative permit terms and conditions (not excluding permit denial) which, in the judgement of the requester, would be required to implement the purposes and policies of the Act.

(6) In the case of challenges to the application of control or treatment technologies identified in the statement of basis or fact sheet, identification of the basis for the objection, and the alternative technologies or combination of technologies which the requester believes are necessary to meet the requirements of the Act.

(7) Specific identification of each of the discharger's obligations which should be stayed if the request is granted. If the request contests more than one permit term or condition then each obligation which is proposed to be stayed must be referenced to the particular contested term warranting the stay.

(8) Each legal or factual question alleged to be at issue and its relevance to the permit decision.

(9) An estimate of the hearing time necessary for adjudication.

(10) Information supporting the request or relied upon which is not already a part of the administrative record required by 40 CFR 124.18 (48 Fed. Reg. 14272, April 1, 1983).

The granting of a request will stay only the contested portions of the permit. Uncontested provisions of the permit shall be considered issued and effective and the permittee must comply with such provisions. Except, if the permit is for a new source or new discharge, the applicant will be without a permit for the proposed new source or new discharge, pending final Agency action. The final Agency decision on the permit provisions contested at an evidentiary hearing will be made in accordance with Title 40, Code of Federal Regulation, Part 124, Subpart E, found at 48 Federal Register 14278, et seq.

e. Panel Hearing

In the case of an "initial license," including the first grant of an NPDES permit, or the first decision on a requested variance, if the Regional Administrator elects to apply the provisions of subpart F and so states in the public notice of the draft permit, any person may request the Regional Administrator to hold a panel hearing on the permit. Such a request must be made within the comment period of the notice described above. Requests will be considered timely if mailed by certified mail within the comment period. All requests must contain:

(1) A brief statement of the interest of the person requesting the hearing;

(2) A statement of any objections to the draft permit;

(3) A statement of the issues which such person proposes to raise for consideration of such hearing;

(4) The name, mailing address and telephone number of the person making such request;

(5) A clear and concise factual statement of the nature and scope of the interest of the requester;

(6) The names and addresses of all persons whom the requester represents; and

(7) A statement by the requester that, upon motion of any party, or sua sponte by the Presiding Officer and without cost or expense to any other party, the requester shall make available to appear and testify, the following:

(i) The requester;

(ii) All persons represented by the requester, and

(iii) All officers, directors, employees, consultants and agents of the requester and the persons represented by the requester.

(8) Specific references to the contested permit terms and conditions, as well as suggested revised or alternative permit terms and conditions (not excluding permit denial) which, in the judgement of the requester, would be required to implement the purposes and policies of the Act.

If the permit for which a panel hearing is requested is a new source or new discharge, the applicant will be without a permit for the proposed new source or new discharge, pending final Agency action. Panel hearings will be conducted in accordance with title 40, Code of Federal Regulations, Part 124, Subpart F, at 48 Federal Register 14285, et seq.

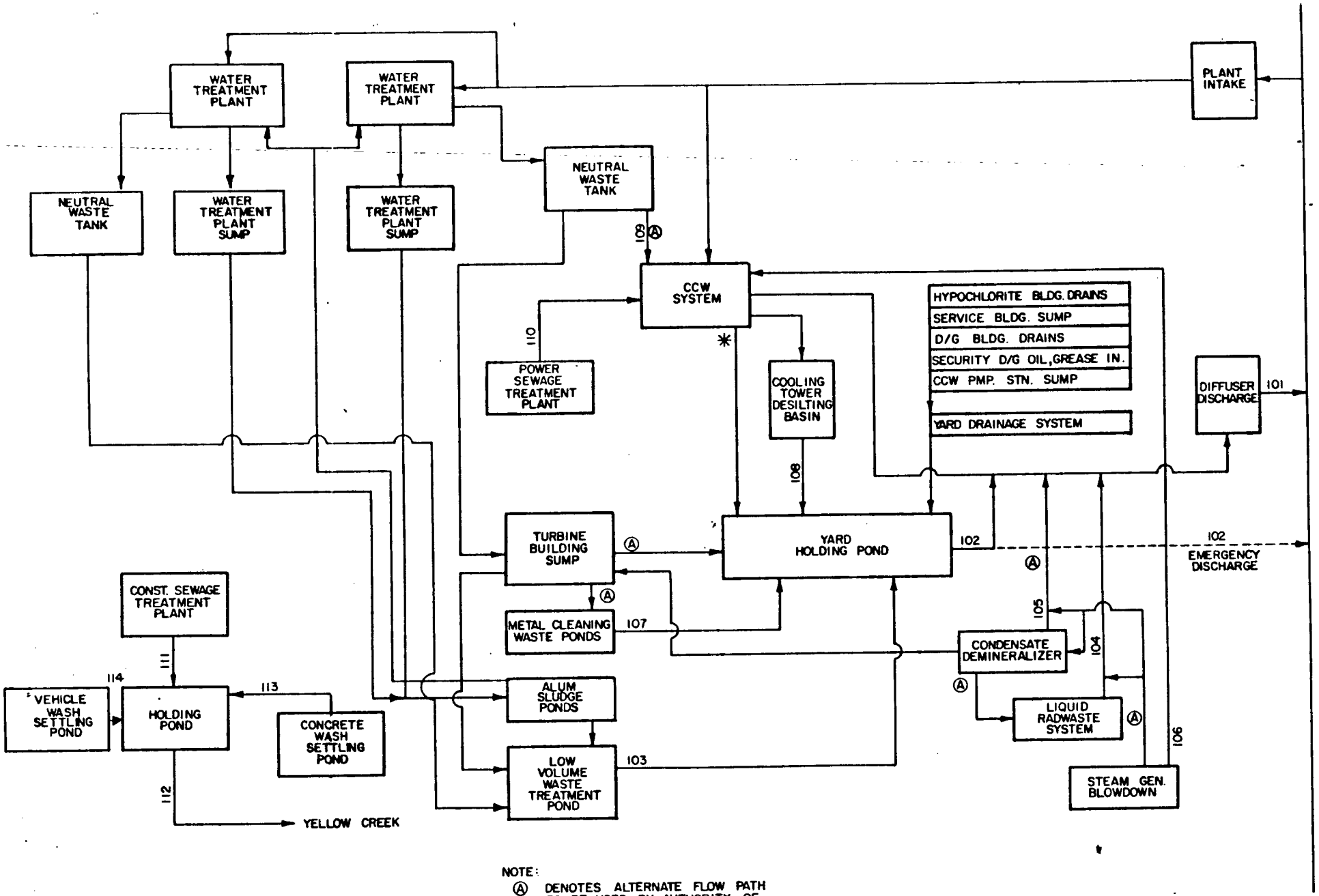

NOTE:
Ⓐ DENOTES ALTERNATE FLOW PATH TO BE USED BY AUTHORITY OF THE PLANT SUPERINTENDENT

* ADDITIONAL MAKE UP WATER FOR EVAPORATIVE LOSS, ETC. THROUGH THE COOLING TOWERS IS ROUTED TO THE YARD HOLDING POND ONLY WHEN THE RIVER FLOW IS LESS THAN 3500 (cfs) AND THE DIFFUSER DISCHARGE IS DISCONTINUED.

WATTS BAR NUCLEAR PLANT

14

ATTACHMENT A
Permit No. TN0020168

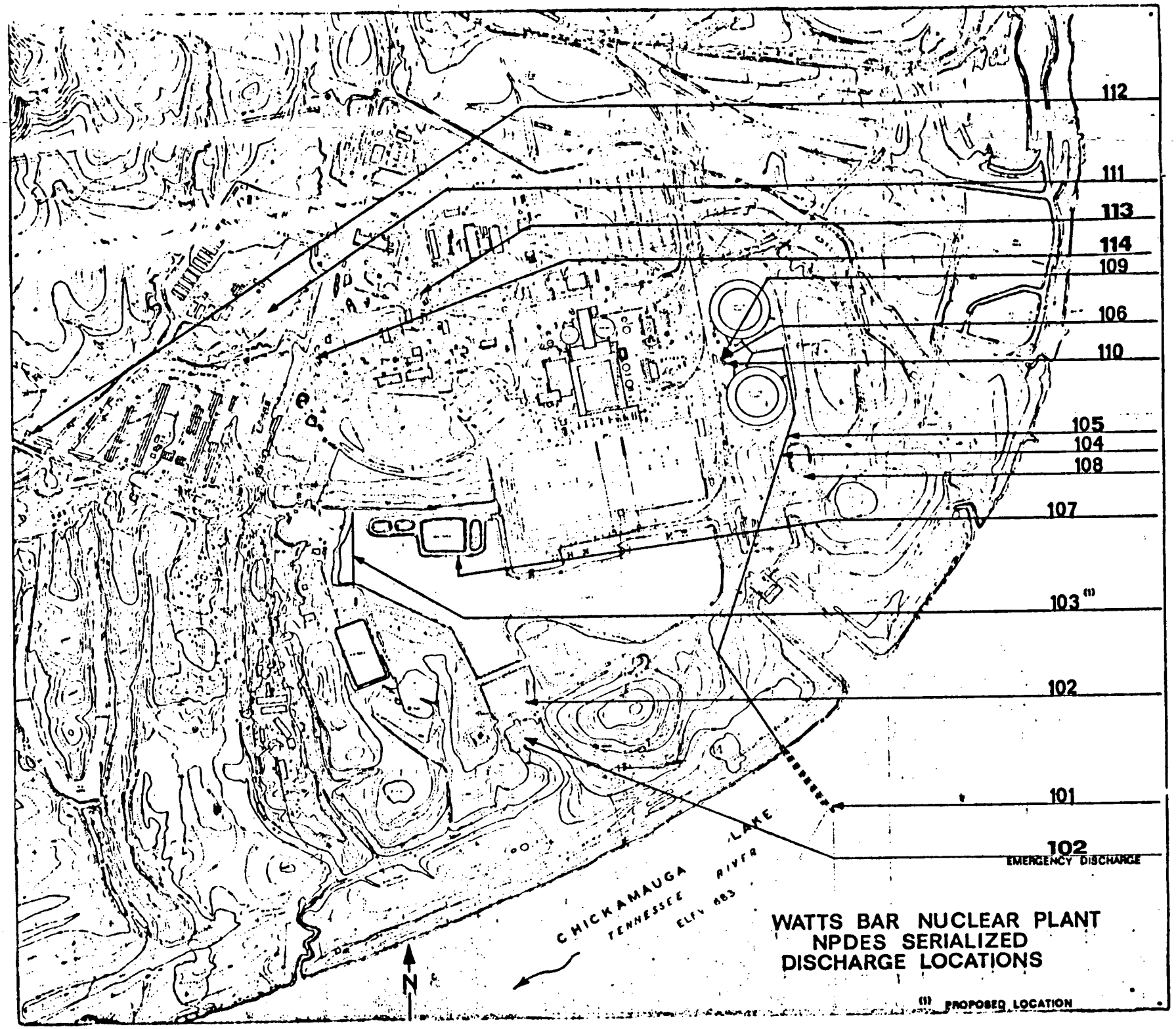

ATTACHMENT B
Permit No. TN0020168

ATTACHMENT C
Permit No. TN0020168

STATE CERTIFICATION
REQUIREMENTS WILL
BE PROVIDED PRIOR
TO PERMIT ISSUANCE

DRAFT

JUN 21 1984

UNITED STATES ENVIRONMENTAL PROTECTION AGENCY

REGION IV

345 COURTLAND STREET
ATLANTA, GEORGIA 30365

AUTHORIZATION TO DISCHARGE UNDER THE
NATIONAL POLLUTANT DISCHARGE ELIMINATION SYSTEM

In compliance with the provisions of the Clean Water Act, as amended, (33 U.S.C. 1251 et. seq; the "ACT").

Tennessee Valley Authority
Environmental Quality Staff
Knoxville, Tennessee 37902

is authorized to discharge from a facility located at

Watts Bar Nuclear Plant
Units 1 and 2
Rhea County, Tennessee

to receiving waters named

Tennessee River and unnamed tributary of Yellow Creek from discharge points enumerated herein, as serial numbers 101 through 114

in accordance with effluent limitations, monitoring requirements and other conditions set forth in Parts I, II, and III hereof. The permit consists of this cover sheet, Part I 17 pages, Part II 15 pages, Part III 4 page(s), and Attachments 3.

This permit shall become effective on

This permit and the authorization to discharge shall expire at midnight,

Date Signed

Paul J. Traina
Director
Water Management Division

DRAFT

JUN 21 1984

A. EFFLUENT LIMITATIONS AND MONITORING REQUIREMENTS

During the period beginning on the effective date and lasting through expiration, the permittee is authorized to discharge from outfall(s) serial number(s) 101 - Diffuser discharge to the Tennessee River.

Such discharges shall be limited and monitored by the permittee as specified below:

Effluent Characteristics	Discharge Limitations	Monitoring Requirements	
	Instantaneous Maximum	Measurement Frequency	Sample Type
Intake Flow-m^3/Day (MGD)	NA	Continuous	Pump logs
Discharge Flow-m^3/Day (MGD)	NA	Continuous	Recorder
Discharge Temperature °C (°F) 1/	35.0 (95.0)	Continuous	Recorder
Total Residual Chlorine (mg/L)	0.10	5/week 2/	Multiple grab 2/
Total Residual Chlorine (mg/L)	0.10	Continuous 3/	Recorder 3/
Total Chlorine Addition (lbs/hr) 4/	30.9	Daily	Logs

Chlorine may be discharged continuously; however, total residual chlorine shall not exceed a maximum instantaneous concentration of 0.10 mg/L. Additionally, continuous chlorination of the ERCW and RCW systems at a maximum concentration of 0.8 mg/L of total residual chlorine for the purpose of asiatic clam control is permitted when the system is operating at an intake temperature above 15.6°C (60°F). Intake temperature shall be monitored and data shall be retained but not reported on DMRs.

The pH shall not be less than 6.0 standard units nor greater than 9.0 standard units and shall be monitored at a frequency of 1/week.

There shall be no distinct discharge of floating scum, solids, oil sheen, visible foam, and other floating matter other than trace amounts.

Samples taken in compliance with the monitoring requirements specified above shall be taken at the following location(s): diffuser pipe prior to entry into the Tennessee River except that intake flow shall be monitored at the plant intake(s) and total chlorine addition at point of injection.

CONTINUED

DRAFT

JUN 21 1984

A. EFFLUENT LIMITATIONS AND MONITORING REQUIREMENTS

During the period beginning on the effective date and lasting through expiration, the permittee is authorized to discharge from outfall(s) serial number(s) 101 - Diffuser discharge to the Tennessee River. Continued.

1/ Thermal monitoring at the diffuser pipe is not applicable until criticality of Unit 1. The receiving water shall not exceed (1) a maximum water temperature change of 3°C (5.4°F) relative to an upstream control point, (2) a maximum temperature of 30.5°C (86.9°F), except when the upstream temperature approaches or exceeds this value, and (3) a maximum rate of change of 2°C (3.6°F) per hour outside of a mixing zone which shall not exceed the following dimensions: (1) a maximum length of 240 feet downstream of the diffusers, and (2) a maximum width of 240 feet. Compliance will be demonstrated by means of field surveys. These surveys will be performed during the critical seasons of spring, summer, and fall of the first year of commercial operation of both Unit 1 and Unit 2 - not less than two surveys per season will be conducted. Measured temperature rise, downstream temperature, rate of temperature change, and the extent of the mixing zone will only be reported as the result of the field surveys.

2/ Multiple grab samples is defined as not less than four equally spaced grab samples during a one-hour period. The monitoring frequency for total residual chlorine shall be increased following significant operational changes which could cause an increase in concentration of chlorine discharged. After collecting adequate data to demonstrate ability to achieve compliance, permittee may request a reduction in monitoring frequency.

3/ Applicable only if condenser chlorination is instituted. Monitoring system and dechlorination facilities, if needed, shall be operational prior to start of condenser chlorination.

4/ Applicable only to RCW and ERCW system chlorination.

DRAFT

JUN 21 1984

A. EFFLUENT LIMITATIONS AND MONITORING REQUIREMENTS

During the period beginning on the effective date and lasting through expiration, the permittee is authorized to discharge from outfall(s) serial number(s) 102 - Yard Holding Pond effluent to the cooling tower blowdown line.

Such discharges shall be limited and monitored by the permittee as specified below:

Effluent Characteristics	Discharge Limitations			Monitoring Requirements	
	Daily Avg.	Daily Max.	Instantaneous Max.	Measurement Frequency	Sample Type
Flow-m^3/Day (MGD)	NA	NA	NA	2/Week 1/	Instantaneous
Oil and Grease (mg/L)	15	20	NA	1/Week	Grab
Total Suspended Solids (mg/L)	30	100	NA	2/Week 1/	Grab
Total Residual Chlorine (mg/L)	NA	NA	0.10 2/	1/Day 2/	Grab 2/
Polychlorinated Biphenyl	NA	NA	See Part III.C	1/6 Months	Grab

Direct overflow from the Yard Holding Pond to the Tennessee River is allowed under emergency conditions to protect dike stability, but only to the minimum extent necessitated by the emergency. During any period of discharge, power generation shall be discontinued unless such discharge is due to a significant rainfall event. Discharge temperature shall not exceed 30.5°C (86.9°F). Verbal notification of such overflow shall be provided to the Director, Water Management Division, and to the State Director within five days after any occurrence with immediate followup by letter. On each occurrence, a grab sample(s) shall be collected daily for total suspended solids, oil and grease, temperature and total residual chlorine analysis and results of such analysis shall be reported either with the notification of overflow or within 30 days of the occurrence.

The pH shall not be less than 6.0 standard units nor greater than 9.0 standard units and shall be monitored at a frequency of 1/day. 2/

There shall be no distinct discharge of floating scum, solids, oil sheen, visible foam, and other floating matter other than trace amounts.

Samples taken in compliance with monitoring requirements specified above shall be taken at the following location(s): Yard Holding Pond effluent prior to mixing with any other waste stream.

1/ Monitoring shall also be conducted during (or after) each rainfall exceeding two inches per day and shall be sampled during the period of maximum expected flow.

2/ Limitations and monitoring requirements are applicable only during periods of direct discharge to the Tennessee River.

DRAFT

JUN 21 1984

A. EFFLUENT LIMITATIONS AND MONITORING REQUIREMENTS

During the period beginning on the completion of the Low Volume Waste Treatment Pond and lasting through expiration, the permittee is authorized to discharge from outfall(s) serial number(s) 103 - Low Volume Waste Treatment Pond effluent to the Yard Holding Pond (OSN 102).

Such discharges shall be limited and monitored by the permittee as specified below:

Effluent Characteristics	Discharge Limitations		Monitoring Requirements	
	Daily Avg.	Daily Max.	Measurement Frequency	Sample Type
Flow-m^3/Day (MGD)	NA	NA	1/Day	Pump logs
Oil and Grease (mg/L)	15	20	1/Week 1/	Grab
Total Suspended Solids (mg/L)	30	100	2/Week 1/	Grab
Polychlorinated Biphenyl	See Part III. C.		1/6 months	Grab

Until completion of the Low Volume Waste Treatment Pond, the five million gallon unlined metal cleaning pond (one of the ponds covered in OSN 107) may be used as an interim waste treatment facility and receive waste from the turbine building sump, condensate demineralizer system, neutral waste tanks, and alum sludge waste supernatant and may be discharged subject to the above effluent limitations and monitoring requirements. Reporting shall be under OSN 103 (not OSN 107).

The pH shall not be less than NA standard units nor greater than NA standard units and shall be monitored at a frequency of NA.

There shall be no distinct discharge of floating scum, solids, oil sheen, visible foam, and other floating matter in other than trace amounts.

Samples taken in compliance with the monitoring requirements specified above shall be taken at the following location(s): Low Volume Waste Treatment Pond (or five-million gallon pond) discharge prior to mixing with any other waste stream except that flow shall be monitored at the turbine building sump. Alternate discharge pathway for the turbine building sump shall also be monitored 1/.

1/ In the event that the turbine building sump is discharged directly to the Yard Holding Pond, total suspended solids and oil and grease in the sump effluent shall be subject to the above effluent limitations and shall be monitored 5/week and also reported under OSN 103.

DRAFT

JUN 21 1984

A. EFFLUENT LIMITATIONS AND MONITORING REQUIREMENTS

During the period beginning on the effective date and lasting through expiration, the permittee is authorized to discharge from outfall(s) serial number(s) 104 - Liquid Radwaste System effluent to the cooling tower blowdown line.

Such discharges shall be limited and monitored by the permittee as specified below:

Effluent Characteristics	Discharge Limitations		Monitoring Requirements	
	Daily Avg.	Daily Max.	Measurement Frequency	Sample Type
Flow-m^3/Day (MGD)	NA	NA	1/Batch	Calculation
Oil and Grease (mg/L)	15	20	2/Week	Grab
Total Suspended Solids (mg/L)	30	100	2/Week	Composite 1/

Note: The radioactive component of this discharge is regulated by the U.S. Nuclear Regulatory Commission under the requirements of the Atomic Energy Act and not by the Environmental Protection Agency under the Clean Water Act.

In the event metal cleaning waste are processed and discharged through the Liquid Radwaste System, the discharge shall comply with the limitations specified for Metal Cleaning Waste (OSN 107).

The pH shall not be less than NA standard units nor greater than NA standard units and shall be monitored at a frequency of NA.

There shall be no distinct discharge of floating scum, solids, oil sheen, visible foam, or other floating matter other than trace amounts.

Samples taken in compliance with the monitoring requirements specified above shall be taken at the following location(s): Radwaste Treatment system prior to mixing with any other waste stream.

1/ One grab sample/batch composited for analysis over a 24-hour day.

DRAFT

JUN 21 1984

A. EFFLUENT LIMITATIONS AND MONITORING REQUIREMENTS

During the period beginning on the effective date and lasting through expiration, the permittee is authorized to discharge from outfall(s) serial number(s) 105 - Condensate Demineralizer Regeneration waste to the cooling tower blowdown line.

Such discharges shall be limited and monitored by the permittee as specified below:

Effluent Characteristics	Discharge Limitations		Monitoring Requirements	
	Daily Avg.	Daily Max.	Measurement Frequency	Sample Type
Flow-m^3/Day (MGD)	NA	NA	1/Batch	Calculation
Oil and Grease (mg/L)	15	20	1/Day	Grab
Total Suspended Solids (mg/L)	30	100	1/Batch	Composite 1/

Note: Limitations and monitoring requirements on this page are not applicable when discharge is directed to the Radwaste System (OSN 104) or the Low Volume Waste Treatment Pond (OSN 103).

The pH shall not be less than NA standard units nor greater than NA standard units and shall be monitored at a frequency of NA.

There shall be no distinct discharge of floating scum, solids, oil sheen, visible foam, or other floating matter other than trace amounts.

Samples taken in compliance with monitoring requirements specified above shall be taken at the following location(s): Condensate Demineralizer Regeneration waste treatment facilities prior to mixing with any other waste stream.

1/ One grab sample/batch, composited for analysis over a 24-hour day.

DRAFT

JUN 21 1984

A. EFFLUENT LIMITATIONS AND MONITORING REQUIREMENTS

During the period beginning on the effective date and lasting through expiration, the permittee is authorized to discharge from outfall(s) serial number(s) 106 - Steam Generator Blowdown to condenser circulating water system.

Such discharges shall be limited and monitored by the permittee as specified below:

Effluent Characteristics	Discharge Limitations		Monitoring Requirements	
	Daily Avg.	Daily Max.	Measurement Frequency	Sample Type
Flow-m^3/Day (MGD)	NA	NA	1/Month	Instantaneous
Oil and Grease (mg/L)	15	20	1/Quarter	Grab
Total Suspended Solids (mg/L)	30	100	1/Month	Grab

Limitations and monitoring requirements on this page are not applicable if blowdown is discharged to the condensate demineralizer system (for recycle) or to the Liquid Radwaste System.

The pH shall not be less than NA standard units nor greater than NA standard units and shall be monitored at a frequency of NA.

Samples taken in compliance with the monitoring requirements specified above shall be taken at the following location(s): discharge from the Steam Generator Blowdown prior to mixing with any other waste stream.

DRAFT

JUN 21 1984

A. EFFLUENT LIMITATIONS AND MONITORING REQUIREMENTS

During the period beginning on the effective date and lasting through expiration, the permittee is authorized to discharge from outfall(s) serial number(s) 107 - Metal Cleaning Waste Pond effluent(s) to the Yard Holding Pond (OSN 102).

Such discharges shall be limited and monitored by the permittee as specified below:

Effluent Characteristics	Discharge Limitations	Monitoring Requirements	
	Daily Max. (mg/L)	Measurement Frequency	Sample Type
Flow-m^3/Day (MGD)	NA	1/Batch	Calculation
Oil and Grease	15	1/	Grab
Total Suspended Solids	30	1/	8-Hour Composite
Copper, Total	1.0	1/	8-Hour Composite
Iron, Total	1.0	1/	8-Hour Composite
Phosphorous as P 2/	1.0	1/	8-Hour Composite
Chem. Oxygen Demand 3/	100	1/	8-Hour Composite

Metal cleaning waste shall mean any cleaning compounds, rinse waters or any other waterborne residues derived from chemical cleaning any metal process equipment. NOTE: Standing water in pipes (which may or may not be chlorinated) is not metal cleaning waste if not associated with chemical cleaning and subsequent rinses of cleaning compounds.

Metal cleaning waste shall not be discharged into a pond(s) before all nonmetal cleaning liquids have been removed.

No wastes other than metal cleaning wastes shall be discharged into the Metal Cleaning Waste Ponds prior to complete discharge of metal cleaning wastes and complete removal of all solids deposited from metal cleaning waste treatment.

The pH shall not be less than 6.0 standard units nor greater than 9.0 standard units and shall be monitored by a grab sample. 1/

There shall be no distinct discharge of floating scum, solids, oil sheen, visible foam, and other floating matter in other than trace amounts.

CONTINUED

DRAFT

JUN 21 1984

A. EFFLUENT LIMITATIONS AND MONITORING REQUIREMENTS

During the period beginning on the effective date and lasting through expiration, the permittee is authorized to discharge from outfall(s) serial number(s) 107 - Metal Cleaning Waste Pond effluent to the Yard Holding Pond (OSN 102). Continued.

Samples taken in compliance with the monitoring requirements specified above shall be taken at the following location(s): discharge from the individual pond(s) prior to mixing with any other waste stream except that waste flow generated per batch shall also be determined.

1/ On start of discharge and for each complete 8-hour period thereafter up to one day (24 hours) with one grab sample taken immediately prior to termination of discharge. For discharge periods longer than one day a composite shall be required on start of discharge and once/week thereafter for a minimum of three 8-hour periods until termination of discharge with one grab sample taken immediately prior to termination of discharge.

2/ Limitation and monitoring requirements shall apply only if phosphorous bearing cleaning solutions are used.

3/ Limitation and monitoring requirements shall apply only if organic acid cleaning solutions are used.

DRAFT

JUN 21 1984

A. EFFLUENT LIMITATIONS AND MONITORING REQUIREMENTS

During the period beginning on the effective date and lasting through expiration, the permittee is authorized to discharge from outfall(s) serial number(s) 108 - Cooling Tower Desilting Basin effluent to the Yard Holding Pond (OSN 102).

Such discharges shall be limited and monitored by the permittee as specified below:

Effluent Characteristics	Discharge Limitations		Monitoring Requirements	
	Daily Avg.	Daily Max.	Measurement Frequency	Sample Type
Flow-m^3/Day (MGD)	NA	NA	1/Batch	Pump logs
Total Suspended Solids (mg/L)	30	100	2/Batch	Grabs 1/

The pH shall not be less than NA standard units nor greater than NA standard units and shall be monitored at a frequency of NA.

Samples taken in compliance with the monitoring requirements specified above shall be taken at the following location(s): discharge from Desilting Basin effluent prior to mixing with any other waste stream.

1/ Samples shall be collected on start of discharge and immediately prior to termination of discharge.

A. EFFLUENT LIMITATIONS AND MONITORING REQUIREMENTS

During the period beginning on the effective date and lasting through expiration, the permittee is authorized to discharge from outfall(s) serial number(s) 109 - Neutral Waste Tank discharge to the condenser cooling water system.

Such discharges shall be limited and monitored by the permittee as specified below:

Effluent Characteristics	Discharge Limitations		Monitoring Requirements	
	Daily Avg.	Daily Max.	Measurement Frequency	Sample Type
Flow-m^3/Day (MGD)	NA	NA	1/Batch	Calculation
Oil and Grease (mg/L)	15	20	2/Month	Grab
Total Suspended Solids (mg/L)	30	100	1/Batch	Grab

Note: Limitations and monitoring requirements on this page are not applicable when discharge is directed to the Low Volume Waste Treatment Pond (OSN 103) via the turbine building sump. Limitations and monitoring are applicable if the turbine building sump discharges to the Yard Holding Pond (OSN 102).

The pH shall not be less than NA standard units nor greater than NA standard units and shall be monitored at a frequency of NA.

There shall be no distinct discharge of floating scum, solids, oil sheen, visible foam, and other floating matter other than trace amounts.

Samples taken in compliance with monitoring requirements specified above shall be taken at the following location(s): Neutral Waste Tank discharge prior to mixing with any other waste stream.

DRAFT

JUN 21 1984

A. EFFLUENT LIMITATIONS AND MONITORING REQUIREMENTS

During the period beginning on the effective date and lasting through expiration, the permittee is authorized to discharge from outfall(s) serial number(s) 110 - Sewage Treatment Plant effluent to the condenser cooling water system.

Such discharges shall be limited and monitored by the permittee as specified below:

Effluent Characteristics	Discharge Limitations		Monitoring Requirements	
	Daily Avg.	Daily Max.	Measurement Frequency	Sample Type
Flow-m^3/Day (MGD)	45(0.012)	NA	5/Week	Totalizer
BOD_5 (mg/L)	30	45	2/Month	Grab
Total Suspended Solids (mg/L)	30	45	2/Month	Grab

The pH shall not be less than NA standard units nor greater than NA standard units and shall be monitored at a frequency of NA.

There shall be no distinct discharge of floating scum, solids, oil sheen, visible foam, and other floating matter in other than trace amounts.

Samples taken in compliance with the monitoring requirements specified above shall be taken at the following location(s): Sewage Treatment Plant effluent prior to mixing with any other waste stream.

DRAFT

JUN 21 1984

DRAFT

JUN 21 1984

A. EFFLUENT LIMITATIONS AND MONITORING REQUIREMENTS

During the period beginning on the effective date and lasting through expiration, the permittee is authorized to discharge from outfall(s) serial number(s) 111 - Combined Sewage Treatment Plant (four package plants in parallel) effluent to the Runoff Holding Pond (OSN 112).

Such discharges shall be limited and monitored by the permittee as specified below:

Effluent Characteristics	Discharge Limitations		Monitoring Requirements	
	Daily Avg.	Daily Max.	Measurement Frequency	Sample Type
Flow-m^3/Day (MGD)	1/	NA	Continuous	Recorder
BOD_5 (mg/L)	30	45	1/Week	Grab
Total Suspended Solids	30	45	1/Week	Grab
Settleable Solids (ml/L)	NA	1.0	5/Week	Grab
Total Residual Chlorine (mg/L)	NA	2.0	5/Week	Grab

The pH shall not be less than NA standard units or greater than NA standard units and shall be monitored at a frequency of NA.

There shall be no distinct discharge of floating scum, solids, oil sheen, visible foam, and other floating matter in other than trace amounts.

Samples taken in compliance with the monitoring requirements specified above shall be taken at the following location(s): Combined Sewage Treatment Plant effluent prior to mixing with any other waste stream.

1/ Individual units have design capacities of 45 (0.012), 45 (0.012), 45 (0.012), and 114 (0.030). No unit shall be hydraulically overloaded.

DRAFT

JUN 21 1984

A. EFFLUENT LIMITATIONS AND MONITORING REQUIREMENTS

During the period beginning on start of discharge and lasting through expiration, the permittee is authorized to discharge from outfall(s) serial number(s) 112 - Runoff Holding Pond (includes OSNs 111, 113, and 114) to unnamed tributary of Yellow Creek.

Such discharges shall be limited and monitored by the permittee as specified below:

Effluent Characteristics	Discharge Limitations		Monitoring Requirements	
	Daily Avg.	Daily Max.	Measurement Frequency	Sample Type
Flow-m^3/Day (MGD)	NA	NA	1/Week 1/	Instantaneous
Total Suspended Solids (mg/L)	30 1/	100 1/	1/Week 1/	Grab
Settleable Solids (ml/L)	NA	NA	1/Week 1/	Grab

The pH shall not be less than NA standard units nor greater than NA standard units and shall be monitored at a frequency of NA.

There shall be no distinct discharge of floating scum, solids, oil sheen, visible foam, or other floating matter in other than trace amounts.

Samples taken in compliance with the monitoring requirements specified above shall be taken at the following location(s): point(s) of discharge from the Holding Pond.

1/ After final stabilization of the 30-acre borrow area and completion of waste treatment ponds for OSN 113 and 114, discharge limitations on total suspended solids shall no longer be applicable, flow monitoring may be discontinued, and total suspended solids and settleable solids monitoring frequency reduced to 2/month applicable only during the period of March through October of each year.

DRAFT

JUN 21 1984

A. EFFLUENT LIMITATIONS AND MONITORING REQUIREMENTS

During the period beginning on November 1, 1984 1/ and lasting through expiration, the permittee is authorized to discharge from outfall(s) serial number(s) 113 - Concrete Wash Plant Settling Pond effluent to Runoff Holding Pond (OSN 112) to unnamed tributary of Yellow Creek.

Such discharges shall be limited and monitored by the permittee as specified below:

Effluent Characteristics	Discharge Limitations	Monitoring Requirements	
	Instantaneous Max.	Measurement Frequency	Sample Type
Flow-m^3/day (MGD)	NA	1/Week	Weir Reading(s)
Oil and Grease (mg/L)	20	1/Month	Grab
Total Suspended Solids (mg/L)	40	1/Week	Grab

The pH shall not be less than 6.0 standard units nor greater than 9.0 standard units and shall be monitored at a frequency of 1/week and during any periods in which concrete wash wastes are discharged to the pond.

There shall be no distinct discharge of floating scum, solids, oil sheen, visible foam, or other floating matter in other than trace amounts.

Samples taken in compliance with the monitoring requirements specified above shall be taken at the following location(s): discharge from Settling Pond prior to mixing with any other waste stream.

1/ Runoff Holding Pold (OSN 112) will provide interim treatment of this waste stream until construction is completed.

A. EFFLUENT LIMITATIONS AND MONITORING REQUIREMENTS

During the period beginning on November 1, 1984 1/ and lasting through expiration, the permittee is authorized to discharge from outfall(s) serial number(s) 114-Vehicle Wash Settling Pond effluent to Runoff Holding Pond (OSN 112) to unnamed tributary to Yellow Creek .

Such discharges shall be limited and monitored by the permittee as specified below:

Effluent Characteristics	Discharge Limitations (mg/L except as noted)		Monitoring Requirements	
	Daily Avg.	Daily Max.	Measurement Frequency	Sample Type
Flow-m^3/day (MGD)	NA	NA	1/Week	Weir Reading(s)
Oil and Grease	15	20	1/Week	Grab
Total Suspended Solids	30	40	1/Week	Grab
Settleable Solids (ml/L)	NA	0.5	1/Week	Grab

The pH shall not be less than 6.0 standard units or greater than 9.0 standard units and shall be monitored at a frequency of 1/month by a grab sample.

There shall be no distinct discharge of floating scum, solids, oil sheen, visible foam, and other floating matter in other than trace amounts.

Samples taken in compliance with the monitoring requirements specified above shall be taken at the following location(s): Vehicle Wash Settling Pond effluent prior to mixing with any other waste stream.

DRAFT
JUN 21 1984

1/ Runoff Holding Pond (OSN 112) will provide interim treatment of this waste stream until construction is completed.

DRAFT

JUN 21 1984

B. SCHEDULE OF COMPLIANCE

1. The permittee shall achieve compliance with the effluent limitations specified for discharges in accordance with the following schedule.

   a. Compliance with effluent limitations - effective date or start of discharge as applicable.
   b. Plume report (III.E.) - 18 months after commercial operation date of Unit 2.
   c. Preoperational Aquatic Monitoring Program (III.F.)
      (1) Final Report Due - December 31, 1984, for 1973-1984 (if fuel load is delayed beyond October 1, 1984, the final report shall be extended appropriately).
   d. Operational aquatic monitoring program (III.G.)
      (1) Implement - Biological year that 100 percent power is predicted for Unit 1.
      (2) First report - 18 months after 100 percent power is achieved.
      (3) Subsequent reports - annually after the first report.
   e. Erosion and Sediment Control Report (III.I.)
      (1) Submit plan for approval - July 31, 1984.
      (2) First report - March 31, 1985.
      (3) Second report - September 30, 1985.
      (4) Subsequent reports - annually after second report, as required.
   f. Discharge Chlorination Study (III.K.)
      (1) Submit report - December 31, 1984.
      (2) Operation of dechlorination system, if necessary - May 31, 1985.
   g. Concrete Wash Settling Pond (OSN 113)
      (1) Operational Date - October 31, 1984.
   h. Vehicle Wash Settling Pond (OSN 114)
      (1) Operational Date - October 31, 1984.
   i. Flow Calibration Report (III.L.)
      (1) Report Due - December 31, 1984.
   j. Priority Pollutant Data (III.N.)
      (1) First Report - 12 months after commercial operation date of Unit I.
      (2) Second Report - 12 months after commercial operation date of Unit 2.

2. Permittee shall at all times provide the operation and maintenance necessary to operate the existing facilities at optimum efficiency.

3. No later than 14 calendar days following a date identified in the above schedule of compliance, the permittee shall submit either a report of progress or, in the case of specific actions being required by identified dates, a written notice of compliance or noncompliance. In the latter case, the notice shall include the cause of noncompliance, and remedial actions taken, and the probability of meeting the next scheduled requirement.

PART II

STANDARD CONDITIONS FOR NPDES PERMITS

SECTION A. GENERAL CONDITIONS

1. Duty to Comply

The permittee must comply with all conditions of this permit. Any permit noncompliance constitutes a violation of the Clean Water Act and is grounds for enforcement action; for permit termination, revocation and reissuance, or modification; or for denial of a permit renewal application.

2. Penalties for Violations of Permit Conditions

Any person who violates a permit condition is subject to a civil penalty not to exceed $10,000 per day of such violation. Any person who willfully or negligently violates permit conditions is subject to a fine of not less than $2,500 nor more than $25,000 per day of violation, or by imprisonment for not more than 1 year, or both.

3. Duty to Mitigate

The permittee shall take all reasonable steps to minimize or prevent any discharge in violation of this permit which has a reasonable likelihood of adversely affecting human health or the environment.

4. Permit Modification

After notice and opportunity for a hearing, this permit may be modified, terminated or revoked for cause (as described in 40 CFR 122.62 et seq) including, but not limited to, the following:

a. Violation of any terms or conditions of this permit;

b. Obtaining this permit by misrepresentation or failure to disclose fully all relevant facts;

c. A change in any conditions that requires either temporary interruption or elimination of the permitted discharge; or

d. Information newly acquired by the Agency indicating the discharge poses a threat to human health or welfare.

If the permittee believes that any past or planned activity would be cause for modification or revocation and reissuance under 40 CFR 122.62, the permittee must report such information to the Permit Issuing Authority. The submittal of a new application may be required of the permittee. The filing of a request by the permittee for a permit modification, revocation and reissuance, or termination, or a notification of planned changes or anticipated noncompliance, does not stay any permit condition.

5. Toxic Pollutants

Notwithstanding Paragraph A-4, above, if a toxic effluent standard or prohibition (including any schedule of compliance specified in such effluent standard or prohibition) is established under Section 307(a) of the Act for a toxic pollutant which is present in the discharge and such standard or prohibition is more stringent than any limitation for such pollutant in this permit, this permit shall be modified or revoked and reissued to conform to the toxic effluent standard or prohibition and the permittee so notified.

The permittee shall comply with effluent standards or prohibitions established under Section 307(a) of the Clean Water Act for toxic pollutants within the time provided in the regulations that establish those standards or prohibitions, even if the permit has not yet been modified to incorporate the requirement.

6. Civil and Criminal Liability

Except as provided in permit conditions on "Bypassing" Section B, Paragraph B-3, nothing in this permit shall be construed to relieve the permittee from civil or criminal penalties for noncompliance.

7. Oil and Hazardous Substance Liability

Nothing in this permit shall be construed to preclude the institution of any legal action or relieve the permittee from any responsibilities, liabilities, or penalties to which the permittee is or may be subject under Section 311 of the Act.

8. State Laws

Nothing in this permit shall be construed to preclude the institution of any legal action or relieve the permittee from any responsibilities, liabilities, or penalties established pursuant to any applicable State law or regulation under authority preserved by Section 510 of the Act.

9. Property Rights

The issuance of this permit does not convey any property rights of any sort, or any exclusive privileges, nor does it authorize any injury to private property or any invasion of personal rights, nor any infringement of Federal, State or local laws or regulations.

10. Onshore or Offshore Construction

This permit does not authorize or approve the construction of any onshore or offshore physical structures or facilities or the undertaking of any work in any waters of the United States.

11. Severability

The provisions of this permit are severable, and if any provision of this permit, or the application of any provision of this permit to any circumstance, is held invalid, the application of such provision to other circumstances, and the remainder of this permit, shall not be affected thereby.

SECTION B. OPERATION AND MAINTENANCE OF POLLUTION CONTROLS

1. Proper Operation and Maintenance

The permittee shall at all times properly operate and maintain all facilities any systems of treatment and control (and related appurtenances) which are installed or used by the permittee to achieve compliance with the conditions of this permit. Proper operation and maintenance includes effective performance, adequate funding, adequate operator staffing and training, and adequate laboratory and process controls, including appropriate quality assurance procedures. This provision requires the operation of back-up or auxiliary facilities or similar systems only when necessary to achieve compliance with the conditions of the permit.

2. Need to Halt or Reduce not a Defense

It shall not be a defense for a permittee in an enforcement action that it would have been necessary to halt or reduce the permitted activity in order to maintain compliance with the condition of this permit.

3. Bypass of Treatment Facilities

a. Definitions

(1) "Bypass" means the intentional diversion of waste streams from any portion of a treatment facility, which is not a designed or established operating mode for the facility.

(2) "Severe property damage" means substantial physical damage to property, damage to the treatment facilities which causes them to become inoperable, or substantial and permanent loss of natural resources which can reasonably be expected to occur in the absence of a bypass. Severe property damage does not mean economic loss caused by delays in production.

b. Bypass not exceeding limitations.

The permittee may allow any bypass to occur which does not cause effluent limitations to be exceeded, but only if it also is for essential maintenance to assure efficient operation. These bypasses are not subject to the provisions of Paragraphs c. and d. of this section.

c. Notice

(1) Anticipated bypass. If the permittee knows in advance of the need for a bypass, it shall submit prior notice, if possible at least ten days before the date of the bypass; including an evaluation of the anticipated quality and effect of the bypass.

(2) Unanticipated bypass. The permittee shall submit notice of an unanticipated bypass as required in Section D, Paragraph D-8 (24-hour notice).

d. Prohibition of bypass.

(1) Bypass is prohibited and the Permit Issuing Authority may take enforcement action against a permittee for bypass, unless:

(a) Bypass was unavoidable to prevent loss of life, personal injury, or severe property damage;

(b) There were no feasible alternatives to the bypass, such as the use of auxiliary treatment facilities, retention of untreated wastes, or maintenance during normal periods of equipment downtime. This condition is not satisfied if the permittee could have installed adequate backup equipment to prevent a bypass which occurred during normal periods of equipment downtime or preventive maintenance; and

(c) The permittee submitted notices as required under Paragraph c. of this section.

(2) The Permit Issuing Authority may approve an anticipated bypass, after considering its adverse effects, if the Permit Issuing Authority determines that it will meet the three conditions listed above in Paragraph d.(1) of this section.

e. Upsets

An upset constitutes an affirmative defense to an action brought for non-compliance with such technology based permit limitation if the requirements of 40 CFR 122.41(n) are met.

4. Removed Substances

This permit does not authorize discharge of solids, sludge, filter backwash, or other pollutants removed in the course of treatment or control or wastewaters to waters of the United States unless specifically limited in Part 1.

SECTION C. MONITORING AND RECORDS

1. Representative Sampling

Samples and measurements taken as required herein shall be representative of the volume and nature of the monitored discharge. All samples shall be taken at the monitoring points specified in this permit and, unless otherwise specified, before the effluent joins or is diluted by any other wastestream, body of water, or substance. Monitoring points shall not be changed without notification to and the approval of the Permit Issuing Authority.

2. Flow Measurements

Appropriate flow measurement devices and methods consistent with accepted scientific practices shall be selected and used to insure the accuracy and reliability of measurements of the volume of monitored discharges. The devices shall be installed, calibrated and maintained to insure that the accuracy of the measurements are consistent with the accepted capability of that type of device. Devices selected shall be capable of measuring flows with a maximum deviation of less than ± 10% from the true discharge rates throughout the range of expected discharge volumes. Once-through condenser cooling water flow which is monitored by pump logs, or pump hour meters as specified in Part I of this permit and based on the manufacturer's pump curves shall not be subject to this requirement. Guidance in selection, installation, calibration and operation of acceptable flow measurement devices can be obtained from the following references:

1. "A Guide of Methods and Standards for the Measurement of Water Flow", U.S. Department of Commerce, National Bureau of Standards, NBS Special Publication 421, May 1975, 97 pp. (Available from the U.S. Government Printing Office, Washington, D.C. 20402. Order by SD catalog No. C13.10:421.)

2. "Water Measurement Manual", U.S. Department of Interior, Bureau of Reclamation, Second Edition, Revised Reprint, 1974, 327 pp. (Available from the U.S. Government Printing Office, Washington, D.C. 20402. Order by catalog No. 127.19/2:W29/2, Stock No. S/N 24003-0027.)

3. "Flow Measurement in Open Channels and Closed Conduits", U.S. Department of Commerce, National Bureau of Standards, NBS Special Publication 484, October 1977, 982 pp. (Available in paper copy or microfiche from National Technical Information Service (NTIS), Springfield, VA 22151. Order by NTIS No. PB-273 535/5ST.)

4. "NPDES Compliance Flow Measurement Manual", U.S. Environmental Protection Agency, Office of Water Enforcement, Publication MCD-77, September 1981, 135 pp. (Available from the General Services Administration (8BRC), Centralized Mailing Lists Services, Building 41, Denver Federal Center, Denver, CO 80225.)

3. Monitoring Procedures

Monitoring must be conducted according to test procedures approved under 40 CFR Part 136, unless other test procedures have been specified in this permit.

4. Penalties for Tampering

The Clean Water Act provides that any person who falsifies, tampers with, or knowingly renders inaccurate, any monitoring device or method required to be maintained under this permit shall, upon conviction, be punished by a fine of not more than $10,000 per violation, or by imprisonment for not more than 6 months per violation, or by both.

5. Retention of Records

The permittee shall retain records of all monitoring information, including all calibration and maintenance records and all original strip chart recordings for continuous monitoring instrumentation, copies of all reports required by this permit, and records of all data used to complete the application for this permit, for a period of at least 3 years from the date of the sample, measurement, report or application. This period may be extended by the Permit Issuing Authority at any time.

6. Record Contents

Records of monitoring information shall include:

a. The date, exact place, time and methods of sampling or measurements;

b. The individual(s) who performed the sampling or measurements;

c. The date(s) analyses were performed;

d. The individual(s) who performed the analyses;

e. The analytical techniques or methods used; and

f. The results of such analyses.

7. Inspection and Entry

The permittee shall allow the Permit Issuing Authority, or an authorized representative, upon the presentation of credentials and other documents as may be required by law, to:

a. Enter upon the permittee's premises where a regulated facility or activity is located or conducted, or where records must be kept under the conditions of this permit;

b. Have access to and copy, at reasonable times, any records that must be kept under the conditions of this permit;

c. Inspect at reasonable time any facilities, equipment (including monitoring and control equipment), practices, or operations regulated or required under this permit, and

d. Sample or monitor at reasonable times, for the purposes of assuring permit compliance or as otherwise authorized by the Clean Water Act, any substances or parameters at any location.

SECTION D. REPORTING REQUIREMENTS

1. Change in Discharge

Any anticipated facility expansions, production increases, or process modifications which will result in new, different, or increased discharges of pollutants must be reported by submission of a new NPDES application or, if such changes will not violate the effluent limitations specified in this permit, by notice to the Permit Issuing Authority of such changes. Following such notice, the permit may be modified to specify and limit any pollutants not previously limited.

2. Anticipated Noncompliance

The permittee shall give advance notice to the Permit Issuing Authority of any planned change in the permitted facility or activity which may result in noncompliance with permit requirements. Any maintenance of facilities, which might necessitate unavoidable interruption of operation and degradation of effluent quality, shall be scheduled during noncritical water quality periods and carried out in a manner approved by the Permit Issuing Authority.

3. Transfer of Ownership or Control

A permit may be transferred to another party under the following conditions:

a. The permittee notifies the Permit Issuing Authority of the proposed transfer;

b. A written agreement is submitted to the Permit Issuing Authority containing the specific transfer date and acknowledgement that the existing permittee is responsible for violations up to that date and the new permittee liable thereafter.

Transfers are not effective if, within 30 days of receipt of proposal, the Permit Issuing Authority disagrees and notifies the current permittee and the new permittee of the intent to modify, revoke and reissue, or terminate the permit and to require that a new application be filed consistent with 40 CFR Part 122.

4. Monitoring Reports

See Part III of this permit.

5. Additional Monitoring by the Permittee

If the permittee monitors any pollutant more frequently than required by this permit, using test procedures approved under 40 CFR 136 or as specified in this permit, the results of this monitoring shall be included in the calculation and reporting of the data submitted in the Discharge Monitoring Report (DMR). Such increased frequency shall also be indicated.

6. Averaging of Measurements

Calculations for limitations which require averaging of measurements shall utilize an arithmetic mean unless otherwise specified by the Permit Issuing Authority in the permit.

7. Compliance Schedules

Reports of compliance or noncompliance with, or any progress reports on, interim and final requirements contained in any compliance schedule of this permit shall be submitted no later than 14 days following each schedule date. Any reports of noncompliance shall include the cause of noncompliance, any remedial actions taken, and probability of meeting the next scheduled requirement.

8. Twenty-Four Hour Reporting

The permittee shall orally report any noncompliance which may endanger health or the environment, within 24 hours from the time the permittee becomes aware of the circumstances. A written submission shall also be provided within 5 days of the time the permittee becomes aware of the circumstances. The written submission shall contain a description of the noncompliance and its cause, the period of noncompliance, including exact dates and times; and if the noncompliance has not been corrected, the anticipated time it is expected to continue, and steps taken or planned to reduce, eliminate, and prevent reoccurrence of the noncompliance. The Permit Issuing Authority may verbally waive the written report, on a case-by-case basis, when the oral report is made.

The following violations shall be included in the 24 hour report when they might endanger health or the environment:

a. An unanticipated bypass which exceeds any effluent limitation in the permit.

b. Any upset which exceeds any effluent limitation in the permit.

9. Other Noncompliance

The permittee shall report in narrative form, all instances of noncompliance not previously reported under Section D, Paragraphs D-2, D-4, D-7, and D-8 at the time monitoring reports are submitted. The reports shall contain the information listed in Paragraph D-8.

10. Changes in Discharges of Toxic Substances

The permittee shall notify the Permit Issuing Authority as soon as it knows or has reason to believe:

a. That any activity has occurred or will occur which would result in the discharge of any toxic substance(s) (listed at 40 CFR 122, Appendix D, Table II and III) which is not limited in the permit, if that discharge will exceed the highest of the following "notification levels":

(1) One hundred micrograms per liter (100 ug/l);

(2) Two hundred micrograms per liter (200 ug/l) for acrolein and acrylonitrile; five hundred micrograms per liter (500 ug/l) for 2,4-dinitrophenol and for 2-methyl-4,6-dinitrophenol; and one milligram per liter (1 mg/l) for antimony;

(3) Five (5) times the maximum concentration value reported for that pollutant(s) in the permit application;

b. That they have begun or expect to begin to use or manufacture as an intermediate or final product of byproduct any toxic pollutant which was not reported in the permit application.

11. Duty to Reapply

If the permittee wishes to continue an activity regulated by this permit after the expiration date of this permit, the permittee must apply for and obtain a new permit. The application should be submitted as least 180 days before the expiration date of this permit. The Permit Issuing Authority may grant permission to submit an application less than 180 days in advance but not later than the permit expiration date.

Where EPA is the Permit Issuing Authority, the terms and conditions of this permit are automatically continued in accordance with 40 CFR 122.6, only where the permittee has submitted a timely and sufficient application for a renewal permit and the Permit Issuing Authority is unable through no fault of the permittee to issue a new permit before the expiration date.

12. Signatory Requirements

All applications, reports, or information submitted to the Permit Issuing Authority shall be signed and certified.

a. All permit applications shall be signed as follows:

(1) For a corporation: by a responsible corporate officer. For the purpose of this Section, a responsible corporate officer means: (1) a president, secretary, treasurer or vice president of the corporation in charge of a principal business function, or any other person who performs similar policy - or decision-making functions for the corporation, or (2) the manager of one or more manufacturing production or operating facilities employing more than 250 persons or having gross annual sales or expenditures exceeding 25 million (in second quarter 1980 dollars), if authority to sign documents has been assigned or delegated to the manager in accordance with corporate procedures.

(2) For a partnership or sole proprietorship: by a general partner or the proprietor, respectively; or

(3) For a municipality, State, Federal, or other public agency: by either a principal executive officer or ranking elected official.

b. All reports required by the permit and other information requested by the Permit Issuing Authority shall be signed by a person described above or by a duly authorized representative only if:

(1) The authorization is made in writing by a person described above.

(2) The authorization specifies either an individual or a position having responsibility for the overall operation of the regulated facility or activity, such as the position of plant manager, operator of a well or a well field, superintendent, or position of equivalent responsibility. (A duly authorized representative may thus be either a named individual or any individual occupying a named position.); and

(3) The written authorization is submitted to the Permit Issuing Authority.

c. Certification. Any person signing a document under paragraphs (a) or (b) of this section shall make the following certification:

"I certify under penalty of law that this document and all attachments were prepared under the direction or supervision in accordance with a system designed to assure that qualified personnel properly gather and evaluate the information submitted. Based on my inquiry of the person or persons who manage the system, or those persons directly responsible for gathering the information, the information submitted is, to the best of my knowledge and belief, true, accurate, and complete. I am aware that there are significant penalties for submitting false information, including the possibility of fine and imprisonment for knowing violations."

13. Availability of Reports

Except for data determined to be confidential under 40 CFR Part 2, all reports prepared in accordance with the terms of this permit shall be available for public inspection at the offices of the Permit Issuing Authority. As required by the Act, permit applications, permits and effluent data shall not be considered confidential.

14. Penalties for Falsification or Reports

The Clean Water Act provides that any person who knowingly makes any false statement, representation, or certification in any record or other document submitted or required to be maintained under this permit, including monitoring reports or reports of compliance or noncompliance shall, upon conviction, be punished by a fine of not more than $10,000 per violation, or by imprisonment for not more than 6 months per violation, or by both.

SECTION E. DEFINITIONS

1. Permit Issuing Authority

The Regional Administrator of EPA Region IV or his designee, unless at some time in the future the State receives authority to administer the NPDES program and assumes jurisdiction over the permit; at which time, the Director of the State program receiving authorization becomes the issuing authority.

2. Act

"Act" means the Clean Water Act (formerly referred to as the Federal Water Pollution Control Act) Public Law 92-500, as amended by Public Law 95-217 and Public Law 95-576, 33 U.S.C. 1251 et seq.

3. Mass/Day Measurements

a. The "average monthly discharge" is defined as the total mass of all daily discharges sampled and/or measured during a calendar month on which daily discharges are sampled and measured, divided by the number of daily discharges sampled and/or measured during such month. It is, therefore, an arithmetic mean found by adding the weights of the pollutant found each day of the month and then dividing this sum by the number of days the tests were reported. This limitation is identified as "Daily Average" or "Monthly Average" in Part I of the permit and the average monthly discharge value is reported in the "Average" column under "Quantity" on the Discharge Monitoring Report (DMR).

b. The "average weekly discharge" is defined as the total mass of all daily discharges sampled and/or measured during the calendar week on which daily discharges are sampled and/or measured during such week. It is, therefore, an arithmetic mean found by adding the weights of pollutants found each day of the week and then dividing this sum by the number of days the tests were reported. This limitation is identified as "Weekly Average" in Part I of the permit and the average weekly discharge value is reported in the "Maximum" column under "Quantity" on the DMR.

c. The "maximum daily discharge" is the total mass (weight) of a pollutant discharged during a calendar day. If only one sample is taken during any calendar day the weight of pollutant calculated from it is the "maximum daily discharge". This limitation is identified as "Daily Maximum", in Part I of the permit and the highest such value recorded during the reporting period is reported in the "Maximum" column under "Quantity" on the DMR.

d. The "average annual discharge" is defined as the total mass of all daily discharges sampled and/or measured during the calendar year on which daily discharges are sampled and/or measured during each week. It is, therefore, an arithmetic mean found by adding the weights of pollutants found each day of the year and then dividing this sum by the number of days the tests were reported. This limitation is defined as "Annual Average" in Part I of the permit and the average annual discharge value is reported in the "Average" column under "Quantity" on the DMR. The DMR for this report shall be submitted in January for the previous reporting calendar year.

4. Concentration Measurements

a. The "average monthly concentration", other than for fecal coliform bacteria, is the sum of the concentrations of all daily discharges sampled and/or measured divided by the number of daily discharges sampled and/or measured during such month (arithmetic mean of the daily concentration values). The daily concentration value is equal to the concentration of a composite sample or in the case of grab samples is the arithmetic mean (weighted by flow value) of all the samples collected during that calendar day. The average monthly count for fecal coliform bacteria is the geometric mean of the counts for samples collected during a calendar month. This limitation is identified as "Monthly Average" or "Daily Average" under "Other Limits" in Part I of the permit and the average monthly concentration value is reported under the "Average" column under "Quality" on the DMR.

b. The "average weekly concentration", other than for fecal coliform bacteria, is the sum of the concentrations of all daily discharges sampled and/or measured during a calendar week on which daily discharges are sampled and measured divided by the number of daily discharges sampled and/or measured during such week (arithmetic mean of the daily concentration values). The daily concentration value is equal to the concentration of a composite sample or in the case of grab samples is the arithmetic mean (weighted by flow value) of all the samples collected during that calendar day. The average weekly count for fecal coliform bacteria is the geometric mean of the counts for samples collected during a calendar week. This limitation is identified as "Weekly Average" under "Other Limits" in Part I of the permit and the average weekly concentration value is reported under the "Maximum" column under "Quality" on the DMR.

c. The "maximum daily concentration" is the concentration of a pollutant discharge during a calendar day. It is identified as "Daily Maximum" under "Other Limits" in Part I of the permit and the highest such value recorded during the reporting period is reported under the "Maximum" column under "Quality" on the DMR.

d. The "average annual concentration", other than for fecal coliform bacteria, is the sum of the concentrations of all daily discharges sampled and/or measured during a calendar year on which daily discharges are sampled and measured divided by the number of daily discharges sampled and/or measured during such year (arithmetic mean of the daily concentration values). The daily concentration value is equal to the concentration of a composite sample or in the case of grab samples is the arithmetic mean (weighted by flow value) of all the samples collected during that calendar day. The average yearly count for fecal coliform bacteria is the geometric mean of the counts for samples

collected during a calendar year. This limitation is identified as "Annual Average" under "Other Limits" in Part I of the permit and the average annual concentration value is reported under the "Average" column under "Quality" on the DMR. The DMR for this report shall be submitted in January for the previous reporting year.

5. Other Measurements

a. The effluent flow expressed as M^3/day (MGD) is the 24 hour average flow averaged monthly. It is the arithmetic mean of the total daily flows recorded during the calendar month. Where monitoring requirements for flow are specified in Part I of the permit the flow rate values are reported in the "Average" column under "Quantity" on the DMR.

b. An "instantaneous flow measurement" is a measure of flow taken at the time of sampling, when both the sample and flow will be representative of the total discharge.

c. Where monitoring requirements for pH, dissolved oxygen or fecal coliform bacteria are specified in Part I of the permit, the values are generally reported in the "Quality or Concentration" column on the DMR.

6. Types of Samples

a. Composite Sample: A "composite sample" is a combination of not less than 8 influent or effluent portions, of at least 100 ml, collected over the full time period specified in Part I.A. The composite sample must be flow proportioned by either time interval between each aliquot or by volume as it relates to effluent flow at the time of sampling or total flow since collection of the previous aliquot. Aliquots may be collected manually or automatically.

b. Grab Sample: A "grab sample" is a single influent or effluent portion which is not a composite sample. The sample(s) shall be collected at the period(s) most representative of the total discharge.

7. Calculation of Means

a. Arithmetic Mean: The arithmetic mean of any set of values is the summation of the individual values divided by the number of individual values.

b. Geometric Mean: The geometric mean of any set of values is the Nth root of the product of the individual values where N is equal to the number of individual values. The geometric mean is equivalent to the antilog of the arithmetic mean of the logarithms of the individual values. For purposes of calculating the geometric mean, values of zero (0) shall be considered to be one (1).

c. Weighted by Flow Value: Weighted by flow value means the summation of each concentration times its respective flow divided by the summation of the respective flows.

8. Calendar Day

A calendar day is defined as the period from midnight of one day until midnight of the next day. However, for purposes of this permit, any consecutive 24-hour period that reasonably represents the calendar day may be used for sampling.

9. Hazardous Substance

A hazardous substance means any substance designated under 40 CFR Part 116 pursuant to Section 311 of the Clean Water Act.

10. Toxic Pollutant

A toxic pollutant is any pollutant listed as toxic under Section 307(a)(1) of the Clean Water Act.

PART III

OTHER REQUIREMENTS

A. Reporting of Monitoring Results

Monitoring results obtained during the previous three month(s) shall be summarized for each month (each quarter if monitoring frequency is quarterly) and must be reported on a Discharge Monitoring Report Form (EPA No. 3320-1), postmarked no later than the 28th day of the month following the completed reporting period. The first report is due on [1/]. Duplicate signed copies of these, and all other reports required by Section D of Part II, Reporting Requirement; and one copy of each item required by Part III Sections D, I, K, L and N; shall be submitted to the Permit Issuing Authority and the State at the following addresses:

Environmental Protection Agency
Region IV
Facilities Performance Branch
Water Management Division
345 Courtland Street, NE.
Atlanta, Georgia 30365

Tennessee Department of
Health and Environment
Division of Water Management
150 Ninth Avenue, North
TERRA Building
Nashville, Tennessee 37203

Tennessee Department of
Health and Environment
Division of Water Management
2501 Milne Street
Chattanooga, Tennessee 37406

B. Reopener Clause

This permit shall be modified, or alternatively revoked and reissued, to comply with any applicable effluent standard or limitation issued or approved under Sections 301(b)(2)(C), and (D), 304(b)(2), and 307(a)(2) of the Clean Water Act, if the effluent standard or limitation so issued or approved:

1. Contains different conditions or is otherwise more stringent than any effluent limitation in the permit; or

2. Controls any pollutant not limited in the permit.

The permit as modified or reissued under this paragraph shall also contain any other requirements of the Act when applicable.

C. There shall be no discharge of polychlorinated biphenyl (PCB) compounds such as those commonly used for transformer fluid. In the event that PCB-containing equipment is used onsite, administrative procedures shall be instituted to (1) maintain a detailed inventory of PCB use, (2) assure engineering design and construction to preclude release of PCBs to the environment, and (3) effectively detect the loss of PCBs from equipment.

1/ Continuation of previous reporting requirements.

D. The permittee shall notify the Director, Water Management Division, and State Director in writing not later than ninety (90) days prior to instituting use in cooling system(s) of any biocide or chemical which may be toxic to aquatic life, other than chlorine addition to the ERCW, RCW, or CCW systems. Such notification shall include:

1. Name and general composition of biocide or chemical,
2. Ninety-six hour median tolerance limit data for organisms representative of the biota of the waterway into which the discharge shall occur,
3. Quantities to be used,
4. Frequencies of use,
5. Proposed discharge concentrations, and
6. EPA registration number, if applicable.

E. Effluent diffuser shall be designed to assure a minimum dilution factor of 10 at all river flow conditions. Subsequent to commercial operation of Unit 2, field measurements (supplemented as necessary with modeling results) shall be conducted to determine three dimensional configuration of the thermal plumes, substantiate the dispersion modeling, and assure conformance with the assigned thermal mixing zone. The report on thermal plume and dispersion characteristics shall be submitted not later than 18 months after commercial operation of Unit 2 is achieved.

F. Not later than December 31, 1984, permittee shall submit results of preoperational monitoring for the period February 1973 through February 1984. However, if fuel load is delayed beyond October 1, 1984, the reporting period and date of report submission shall be extended appropriately.

NOTE: Nonradiological preoperational aquatic monitoring was conducted from 1973-77 (water quality/nonfish) and 1976-79 (fish), and results reported to EPA on April 15 and April 30, 1980, respectively. Permittee decided to resume these monitoring programs in March 1982 in order to update the preoperational data base.

Additional monitoring of the intake and diffuser gate discharge shall be once/month and shall include total, suspended, settleable, and dissolved solids; ammonia nitrogen; and total copper, iron, manganese, and zinc. This data shall be included in the annual reports and an assessment made as to whether the discharge is in compliance with Tennessee Water Quality Standards.

G. Not later than start of the biological year in which 100 percent power is predicted for Unit 1, permittee shall implement the nonradiological operational aquatic monitoring plan as submitted to EPA on August 31, 1977, with modifications to the fisheries program on March 24, 1980, and February 26, 1981, and to the nonfish/water quality program on October 12, 1979. Reports shall be submitted annually beginning 18 months after 100 percent power is achieved on Unit 1, the first report including data from commencement of operational monitoring until 12 months after 100 percent power achievement. The operational monitoring program shall continue for a period of not less than two years beyond the date that 100 percent power is achieved on Unit 2. In the event that fuel load for Unit 2 is delayed beyond two

years after 100 percent power is achieved on Unit 1, permittee may request of the permitting authority that the program be suspended until the start of the year in which 100 percent power is scheduled for Unit 2. Additionally, permittee may request that changes to the program and schedules be made during the term of the study as supported by study results. Upon approval by the permitting authority, suspension or modifications to the program may be instituted.

Additional monitoring of the intake and diffuser gate discharge shall be once/month and shall include total, suspended, settleable, and dissolved solids; ammonia nitrogen; and total copper, iron, manganese, and zinc. This data shall be included in the annual reports and an assessment made as to whether the discharge is in compliance with Tennessee Water Quality Standards.

H. Copies of all plans and reports submitted in accordance with Parts III. E., F., and G. shall be forwarded by the permittee as follows:

Number of Copies	Addressee
2	Director, Water Management Division, EPA (Atlanta)
1	Chief, Ecological Support Branch, EPA (Athens)
1	Director, Division of Licensing USNRC (Bethesda)
1	Regional Administrator, Region II, USNRC (Atlanta)
2	Regional Director, Fish and Wildlife Service (Atlanta)
1	Director, Tennessee Division of Water Management (Nashville)
1	Regional Engineer, Tennessee Division of Water Management (Chattanooga)

I. The permittee shall maintain and implement "best management practices" procedures to assure adequate control of rainfall runoff from the site as provided in the Erosion and Sediment Control Plan dated July 31, 1984. Reports shall be submitted on March 31, 1985, and September 30, 1985, demonstrating the adequacy of the controls. Subsequent reporting is not necessary unless determined necessary by the Director, Water Management Division, or the State Director.

J. There shall be no discharge through the plant diffuser system when Tennessee River flows are less than 3,500 cubic feet per second. Positive interlocks with the Watts Bar Hydroelectric Plant shall be provided to assure compliance with this requirement.

K. Not later than December 31, 1984, permittee shall report results of an evaluation of chlorination practices for the raw cooling water and emergency raw cooling water systems. Maximum discharge concentrations of total residual chlorine shall be determined for all discharge flow paths.

The results of this evaluation will determine the need to provide dechlorination to comply with the 0.10 mg/L total residual chlorine effluent limit under all operational modes and plant conditions. If dechlorination is required, a schedule to install the necessary facilities for sodium thiosulfate addition shall be provided with the report. Installation shall be completed and in operation no later than May 31, 1985, if needed.

L. Permittee shall demonstrate that wiers and other devices used to measure flow at all outfall serial numbers (other than approved use of pump logs) are capable of measuring flows within a maximum deviation of less than plus or minus 10 percent from the true discharge rates throughout the range of expected discharge flows. A report shall be submitted by December 31, 1984. Flow meters shall be calibrated not less than annually and documentation shall be maintained with NPDES records for the facility.

M. Alternate flow paths for the turbine building sump discharge directly to the yard holding pond (OSN 103), OSN 105, and OSN 109 shall be used only under direct authority of the plant superintendent.

N. Not more than 12 months after the commercial operation dates of Units 1 and 2, respectively, permittee shall submit representative data as provided in 40 CFR 122.21(g)(7)(ii), (iii), and (iv) for outfalls 101, 102, 103, and 112. In the event that any pollutant is present at an unacceptable level, this permit shall be modified, or alternatively revoked, and reissued to comply with any applicable provisions of the Clean Water Act.

O. The Tennessee Division of Water Management has certified the discharges covered by this permit with conditions (see Attachment C). Section 401 of the Act requires that conditions of certification shall become a condition of the permit. The monitoring and sampling shall be as indicated for those parameters included in the certification. Any effluent limits, and any additional requirements, specified in the attached State certification that are more stringent supersede any less stringent effluent limits provided herein. During any time period in which the more stringent state certification effluent limits are stayed or inoperable, the effluent limits provided herein shall be in effect and fully enforceable.

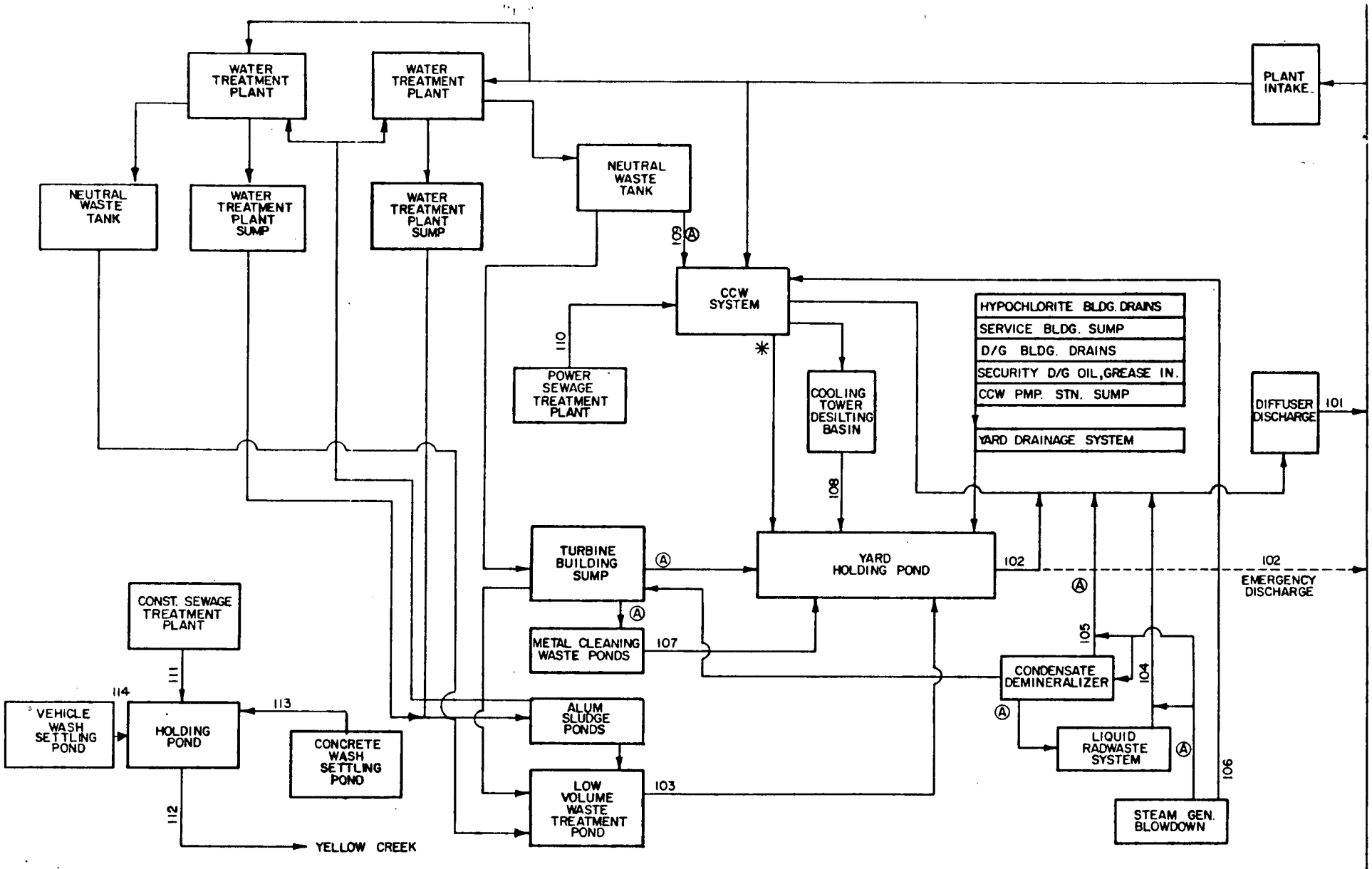

NOTE:

Ⓐ DENOTES ALTERNATE FLOW PATH TO BE USED BY AUTHORITY OF THE PLANT SUPERINTENDENT

* ADDITIONAL MAKE UP WATER FOR EVAPORATIVE LOSS, ETC. THROUGH THE COOLING TOWERS IS ROUTED TO THE YARD HOLDING POND ONLY WHEN THE RIVER FLOW IS LESS THAN 3500 (cfs) AND THE DIFFUSER DISCHARGE IS DISCONTINUED.

WATTS BAR NUCLEAR PLANT

ATTACHMENT A
Permit No. TN0020168

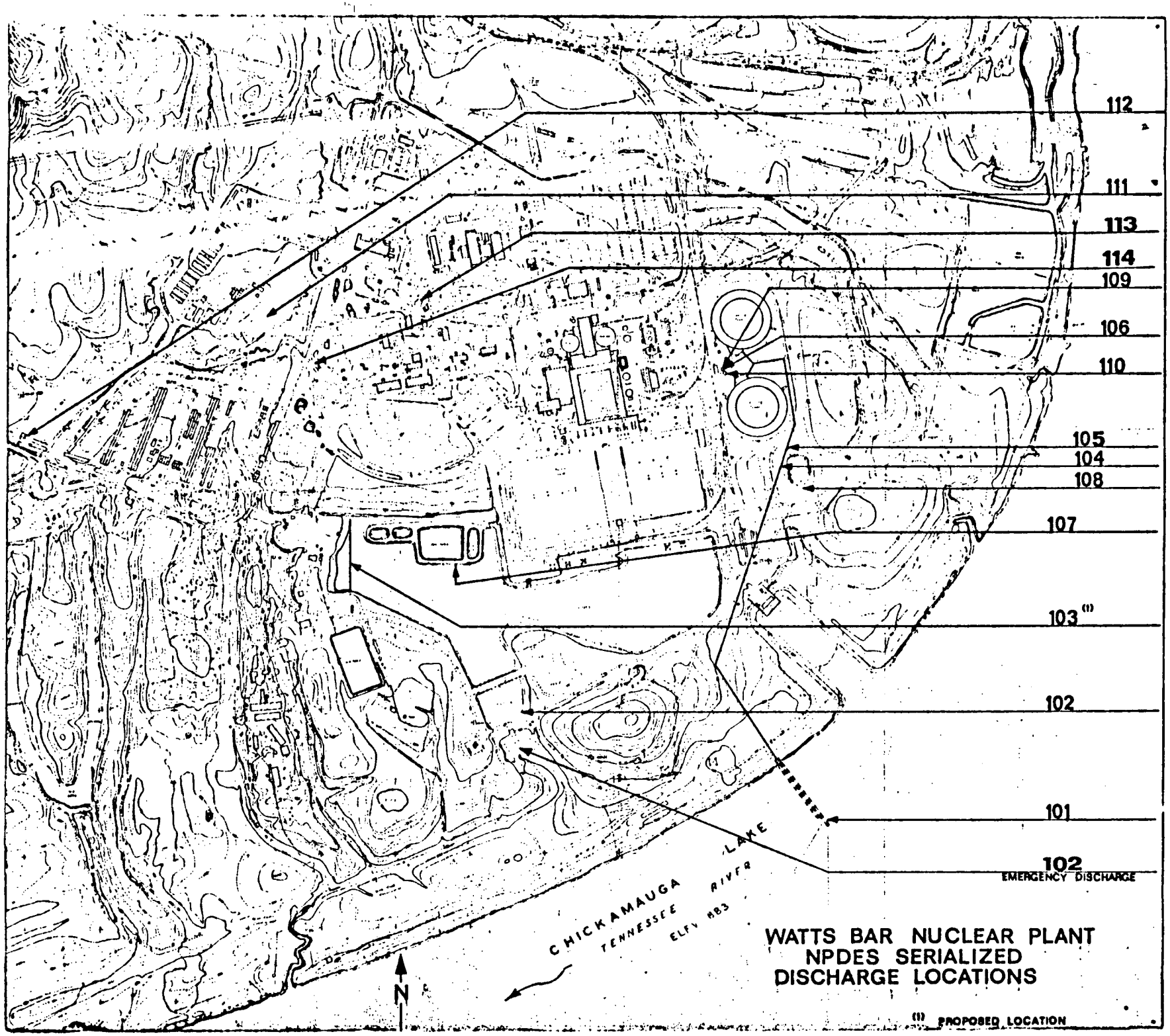

ATTACHMENT B
Permit No. TN0020168