Rancho Seco

Final Status Survey Summary Report

December 13, 2006

Reactor Building Interior Dome

Survey Unit F8111571

Prepared By: _____ Date: 11/8/07

FSS Engineer

Reviewed By: _____ Date: 11/8/07

Lead FSS Engineer

Approved By: _____ Date: 11-13-07

Dismantlement Superintendent, Radiological

FINAL STATUS SURVEY SUMMARY REPORT

Survey Unit:

F8111571, Reactor Building Interior Dome

Survey Unit Description:

The interior surface of the Rancho Seco reactor building dome consists of the painted steel liner which extends from the spring line at elevation 115 feet (approximately 20 feet above the polar crane rail) to the top of the dome at elevation 158 feet 5.75 inches. The dome has a total surface area of approximately 1941 m^2. The liner was contaminated during plant operation and was decontaminated prior to this survey.

The liner surface is not directly accessible to personnel for performing radiation surveys and presents a safety hazard to personnel attempting to perform such surveys. Rather than erect scaffolding from the refuel floor to the dome or place staging on top of the polar crane to provide access for surveys, a decision was made to conduct the final survey using in situ gamma spectroscopy in place of hand held instrument surveys. NUREG-1575, section 5.5.3, recognizes the substitution of scanning for direct measurements if the equipment and methodology is capable of meeting the DQOs.

Survey Unit Design Information:

The Rancho Seco License Termination Plan established the building renovation scenario as the applicable scenario for the development of DCGLs for the reactor building interior dome. The scenario considered the dose to a worker from the entire interior surface of the floor, walls and dome while performing remediation activities. The total interior surface area of the reactor building liner is approximately 7980 m^2. Since the surface area of the dome by itself is 1941 m^2, the dome was conservatively treated as a single survey unit subject to the application of the DCGLs given in DTBD 05-007, "Containment Building DCGLs".

The survey design called for 110 overlapping 28 m^2 circular measurements (a circular plane geometry with a radius of 3 m and a source-to-detector distance of 3 m) centered on the spring line of the dome and angling up one row at a time until the peak of the dome was reached. An arbitrarily assigned point was the center of the first measurement at "zero degrees" with subsequent ring 1 measurements positioned 5.2 m on center from this location. The following survey rings were located at a distance above the first, and subsequent, rings to ensure overlapping coverage of each of the previous rings with a total overlap factor of 1.6 or 60% (i.e., a total of 3113 m^2 were surveyed in order to cover all of the 1941 m^2 of the dome). The detector was raised into position using a powered, remotely operated lift and an attached positioning rod ensured the proper source-to-detector distance was achieved.

The survey was performed using a Canberra characterized, 40% relative efficiency HPGe detector. The count times were set to achieve an MDC of approximately 2200 dpm/100 cm^2. This MDC was a small fraction of the DCGLs given in the License Termination Plan for the reactor building dome of 182,000 dpm/100 cm^2 for Cs-137 and 40,200 dpm/100 cm^2 for Co-60. The respective $DCGL_{EMC}$ values for a 1 m^2 elevated area were 554,000 dpm/100 cm^2 for Co-60 and 2,712,000 dpm/100 cm^2 for Cs-137.

Using a technique previously employed at another decommissioning project, an Investigation Criterion was established for both Cs-137 and Co-60 such that a 1 m^2 elevated area located at the edge of the detector field of view would not go undetected. This resulted in setting the investigation levels at 102,000 dpm/100 cm^2 for Cs-137 and 20,000 dpm/100 cm^2 for Co-60.

The only interference within the survey area was the presence of several brackets for the Emergency Upper Dome Air Circulator. The ductwork for the air circulator had been previously removed leaving only the welded brackets attached to the dome surface (several of the brackets have been removed to facilitate demolition work). The surface area of each pair of brackets that face away from the detector is approximately 0.5 m^2 and the entire compliment is approximately 18 m^2. This surface area is less than 1% of the overlapping detector fields of view and any small area not seen would be insignificant.

The reactor building interior dome survey was conducted while reactor internals disassembly was occurring. This was necessary in order to determine at the earliest possible time whether further decontamination of the liner would be required. As a result, the detector back shield was used and background subtraction was also employed to account for the varying radiation levels in the reactor building caused by the internals work. The initial survey design called for a minimum of three background measurements to be taken at the first survey ring. As the survey progressed, it became necessary to obtain additional background measurements. Some background measurements were subtracted from multiple measurements where a large area had consistent background activity and some background measurements were applied to individual measurements in areas of more varied background.

The Survey Unit Design Parameters are presented in Table 1 below. The survey unit and measurement locations are depicted on the maps in Attachment 1. Measurement locations were established at fixed intervals from a randomly determined "zero degree" start point to ensure more than 100 percent coverage. A total of 3113 m^2 were surveyed on the 1941 m^2 interior dome surface. Two samples of removable contamination were collected from each measurement location of the spring line row. The instrumentation used for the survey along with the MDC values are listed in Tables 2-1 and 2-2 in Attachment 2.

Table 1. Survey Unit Design Parameters

Survey Design Parameter	Value	Comment
Survey Area:	F811	Reactor Building Dome Interior
Survey Unit:	1571	Structure Surface
Class:	1	LTP Table 5-4
SU Area (m^2)**:**	1,941	
Evaluator:	G. Pillsbury	
DCGL (dpm/100 cm^2)**:**	40,200 Co-60 182,000 Cs-137	Gross Activity DCGL
Area Factor:	13.8 Co-60, 14.9 Cs-137	Class 1
Design DCGLemc (dpm/100 cm^2)**:**	554,000 Co-60 2,712,000 Cs-137	Class 1
LBGR (unitized)**:**	0.443	
Design Sigma (unitized)**:**	0.151	
Type I Error:	0.05	
Type II Error:	0.05	
Predominant Nuclide:	Cs-137	
Sample Area (m^2)**:**	N/A	100% survey by *in situ*
Scan Area (m^2)**:**	3,113	
Scan Coverage (%):	160%	overlapping scans
$Z_{1-\alpha}$ **:**	1.645	
$Z_{1-\beta}$ **:**	1.645	
Sign P:	N/A	
Calculated Relative Shift:	3.69	unitized
Relative Shift Used:	N/A	100% survey by in situ
N-Value:	110 scans	100% survey by in situ
Design N-Value + 20%:	110 scans	100% survey by in situ
Design Min Samples N:	110 scans	100% survey by in situ
Grid Spacing L:	N/A	100% survey by in situ

Survey Results:

A total of 110 in situ measurements were made in F8111571. The results including mean, median, standard deviation and range are shown in Table 2.. The results of the in situ measurements were all less than the DCGL. For the unity determination, the adjusted DCGLs listed in Table 2-1 were used. None of the measurements exceeded the investigation criterion confirming there were no areas of elevated activity greater than the $DCGL_{EMC}$ in 1 m^2. The samples for removable surface activity were all less than 10% of the DCGL as shown in Table 3.

Table 2. Direct Measurement Results

Measurement ID	dpm/100 cm^2		
Grid Number	Cs-137	Co-60	Unity
C158	20,069	8,236	0.65
C159	16,583	5,728	0.48
C160	19,381	7,348	0.60
C162	14,208	4,396	0.39
C045	35,742	2,575	0.56
C046	34,188	2,575	0.54
C047	33,078	2,509	0.53
C048	30,636	3,663	0.56
C163	10,501	2,620	0.26
C164	11,699	3,641	0.32
C051	23,310	4,973	0.53
C052	50,838	2,531	0.75
C165	16,184	4,063	0.40
C166	13,009	4,085	0.36
C167	16,539	4,729	0.43
C168	13,808	6,682	0.50
C062	12,898	4,196	0.36
C059	29,082	3,641	0.54
C060	25,308	3,352	0.47
C064	15,029	2,531	0.31
C065	15,962	3,996	0.39
C066	3,974	3,952	0.24
C067	22,422	3,374	0.44
C068	14,719	3,397	0.35
C191	6,749	5,439	0.35
C192	6,593	5,417	0.35
C193	5,483	5,328	0.33
C076	14,741	11,033	0.72
C077	12,388	7,837	0.54
C078	14,053	8,560	0.59
C079	13,919	9,235	0.62
C080	3,685	3,929	0.24
C081	3,707	3,885	0.24
C082	3,619	3,885	0.24
C083	18,581	7,548	0.60
C084	3,374	3,508	0.21
C085	3,619	3,885	0.24

Measurement ID	dpm/100 cm^2		
Grid Number	Cs-137	Co-60	Unity
C086	3,730	3,929	0.24
C195	3,641	3,330	0.21
C089	16,850	10,723	0.73
C091	18,026	10,057	0.71
C092	16,028	8,525	0.61
C093	16,717	7,881	0.59
C094	23,310	6,083	0.58
C095	3,197	3,552	0.21
C096	14,075	3,552	0.35
C097	21,068	3,441	0.43
C098	14,918	3,619	0.36
C099	10,501	6,993	0.47
C100	9,812	7,348	0.48
C101	9,724	8,347	0.53
C102	8,591	7,326	0.46
C103	7,948	6,815	0.43
C105	7,859	5,439	0.36
C106	7,326	4,396	0.30
C107	7,948	7,171	0.45
C108	8,880	9,146	0.56
C109	8,525	8,281	0.51
C110	8,081	4,329	0.31
C111	9,546	3,929	0.31
C112	13,764	7,681	0.54
C113	9,590	9,413	0.58
C114	15,207	8,813	0.62
C115	9,768	5,239	0.38
C116	9,546	5,861	0.40
C117	9,413	7,948	0.50
C118	9,368	5,794	0.40
C119	9,013	6,682	0.44
C120	16,983	6,127	0.51
C121	11,056	7,060	0.48
C122	19,758	9,169	0.69
C123	9,701	8,991	0.56
C124	10,256	11,078	0.67
C125	8,236	8,924	0.54
C126	5,106	4,751	0.30
C127	4,862	3,530	0.23
C128	4,928	8,369	0.47
C129	4,285	3,596	0.23
C130	5,084	7,415	0.43
C131	10,434	7,526	0.50
C132	5,794	7,348	0.43
C133	6,505	7,082	0.43
C134	7,348	5,772	0.37
C136	17,050	6,194	0.51
C137	5,062	7,481	0.43
C138	4,640	7,304	0.42
C139	17,316	6,926	0.55
C140	4,218	3,663	0.23

Measurement ID	dpm/100 cm^2		
Grid Number	Cs-137	Co-60	Unity
C141	14,807	5,927	0.47
C142	7,237	9,790	0.57
C169	3,330	2,642	0.17
C170	3,286	2,664	0.17
C171	6,127	3,441	0.24
C172	6,971	4,462	0.30
C173	10,034	6,704	0.45
C174	11,389	5,261	0.40
C175	12,055	7,060	0.49
C176	11,788	8,170	0.54
C177	6,749	12,299	0.69
C178	10,967	10,390	0.64
C179	14,230	9,080	0.62
C181	7,570	2,775	0.23
C182	8,436	3,308	0.27
C183	7,792	5,417	0.36
C184	7,481	4,285	0.30
C185	22,866	5,150	0.53
C186	20,491	6,216	0.56
C187	10,212	5,594	0.40
C189	27,528	6,727	0.67
C190	7,481	6,327	0.40
Mean	12,446	5,927	0.44
Median	10,234	5,750	0.44
Total Std Dev	8,040	2,338	0.15
Range	3,197-50,838	2,509-12,299	0.17-0.75

Table 3. Removable Surface Activity Results

Sample	Location	dpm/100 cm^2	Sample	Location	dpm/100 cm^2
C069	Above springline	657	C053	Above springline	360
	Below springline	340		Below springline	411
C042	Above springline	362	C054	Above springline	273
	Below springline	298		Below springline	211
C043	Above springline	360	C055	Above springline	613
	Below springline	273		Below springline	273
C044	Above springline	426	C056	Above springline	318
	Below springline	340		Below springline	360
C045	Above springline	2193	C062	Above springline	340
	Below springline	388		Below springline	298
C046	Above springline	320	C059	Above springline	408
	Below springline	395		Below springline	211
C047	Above springline	271	C060	Above springline	318
	Below springline	377		Below springline	211
C048	Above springline	298	C064	Above springline	1041
	Below springline	271		Below springline	244
C049	Above springline	360	C065	Above springline	1167
	Below springline	244		Below springline	295
C050	Above springline	271	C066	Above springline	1541
	Below springline	360		Below springline	318
C051	Above springline	395	C067	Above springline	522
	Below springline	273		Below springline	400
C052	Above springline	1088	C068	Above springline	475
	Below springline	273		Below springline	426
Mean					468
Median					350
Standard Deviation					368
Range					211-2,193

Survey Unit Data Assessment:

The survey design required 110 in situ measurements to provide 100 percent coverage of the reactor building interior dome. The sample mean and median were less than the unitized DCGL so the Sign Test was not required. The sample standard deviation was less than the design standard deviation.

Table 4. Data Assessment Results

Survey Results Parameter	Value	Comment
Material Background Used (dpm/100 cm^2):	N/A	
Ambient Background Used (dpm/100 cm^2):	Multiple	Measurements performed in background subtraction mode
Actual Direct Measurements (N):	110	
Median (dpm/100 cm^2):	0.44	Unity value
Mean (dpm/100 cm^2):	0.44	Unity value
Sample Standard Deviation (dpm/100 cm^2):	0.14	Unity value
Total Standard Deviation (dpm/100 cm^2):	0.15	Unity value.
Maximum (dpm/100 cm^2):	0.75	Unity value
Total Instrument Efficiency:	40% rel.	HPGe
Detector Area (cm^2):	N/A	HPGe
Material Type:	Steel liner	
Final N Value:	110	
S+ Value:	110	
Critical Value:	65	
Sufficient Samples Collected?	Yes	
Maximum Value < DCGL	Yes	
Median Value <DCGL:	Yes	
Mean Value <DCGL:	Yes	
Maximum Value <DCGL$_{EMC}$:	Yes	
Total Standard Deviation <= Sigma:	Yes	
Pass the Sign Test?	Yes	
Reject the Null Hypothesis?	Yes	
Does the Survey Unit Pass All Criteria?	Yes	

Survey Unit Investigations and Results:

No investigations were required and no investigation results are reported.

ALARA Statement:

As stated in Chapter 4 of the LTP, as long as the residual activity within the survey unit is less than the DCGL (i.e. the survey unit average activity is less than the DCGL and the EMC criterion has been met), the ALARA criterion has been met.

Changes in Initial Survey Unit Assumptions:

As stated in the Design Section, the survey was conducted while the nuclide DCGL values were still being refined. The survey results were evaluated against the DCGLs listed in the draft LTP. The final DCGLs cited in DTBD 05-007 were slightly higher which had no impact on the survey results.

The survey unit was designed as a Class 1 structure survey and the sample results are consistent with that classification. The variability of the survey results was slightly less than the characterization data used for survey design. No potential areas of elevated activity were detected. Therefore the EMC criterion was met.

Conclusion:

The FSS of this survey unit was properly designed as a Class 1 survey based on Table 5-4 of the LTP. The required number of direct measurements was made and the scan coverage met the requirement of Table 5-6 of the LTP. No measurements exceeded the unitized DCGL and none of the removable surface activity measurements exceeded 10% of the DCGL. No investigations were required.

The measurement data support rejection of the null hypothesis, providing high confidence that the survey unit satisfied the release criteria and that the data quality objectives were met.

It is concluded that survey unit F8111571 meets the release criteria of 10CFR20.1402.

Characterization Package #: CB811 1570	11/6/2007

Survey Unit Location/Description: Containment Dome interior surface gamma survey to be performed with an ISOCS gamma spectroscopy system.

Material Codes: Metal liner over concrete

WCF # (s): 1 (CA811 1570)

SURVEY DESIGN

Media	Measurement Type	Instrument	Detector	Instrument Mode	Count Time
Metal Liner & concrete	**Beta** ☐ **Gamma** ☒	**ISOCS**	**GC 4019**	**Scaler** ☒ **Ratemeter** ☐	**MDA of 9.9E+04 pCi/m^2**

SURVEY INSTRUCTIONS

General Instructions/Comments:

1. Prejob briefings to be held daily before the commencement of work.
2. Perform gamma scans at 110 locations 3 meters from the interior surfaces of the Containment dome as specified on the attached maps. In addition, perform background counts at 3 specified locations at the 0° azimuth Spring Line in an identical geometry to that used to perform the gamma scans.
3. Perform each gamma spectroscopy analysis for a sufficient count time to achieve an MDA of 0.099 μCi/m^2 (9.90E+04 pCi/m^2). Report identified activities for plant derived radionuclides that exceed an investigation level of 1.09E+06 pCi/m^2 to the originating FSSE or Field Oversight Engineer.
4. For each gamma scan, perform the following:
   a. Note the spectrum number from the sample parameters screen and annotate in the ISOCS sample logbook and on the survey sample records. Also note the date/time of measurement.
   b. Number the gamma scans as provided on the survey Sample Records.
   c. Record the degree setting for each spectrum in the description section of the sample parameter input screen.
   d. Verify the activity level for plant derived radionuclides does not exceed an investigation level of 1.09E+06 pCi/m^2.
5. Perform background gamma scans (background collimator installed on detector shield) at the 0° azimuth Spring Line (Elevation 115' 1 1/8") at circumferential locations of 0°, 60° and 270°. Perform each background analysis for a sufficient count time to achieve an MDA of 0.099 μCi/m^2 (9.90E+04 pCi/m^2).
6. Perform a series of 24 gamma scans at the 0° azimuth Spring Line (Elevation 115' 1 1/8"). For reference purposes, the top of the outer crane rail is Elevation 98' 3". The HPGe detector should be set at a height of 16' 10 1/8" or 5.13 m above the outer crane rail.
   - Position the detector at an angle of 0° to the plane of the platform, perpendicular to the surface to be surveyed and 3 m from the surface of the dome.
   - Spectra to be spaced equidistant (5.2 m on center) throughout the 360° circumference of the Containment Building and as indicated on the Reactor Bldg Dome Ring 1 map.
   - Locate the first survey point with the center of the field of view at the 0° circumferential reference point and perform the remaining survey locations in a clockwise rotation.
   - **Perform a duplicate QC Count at sample point 17 (240°).**

Det. Elevation (ft.)	Feet above crane rail	Meters above crane rail	Detector Angle	Map	Sample Numbers
115' 1 1/8"	16' 10 1/8"	5.13 m	0°	Ring 1	M00001GS thru M00024GS

7. Perform a series of 24 gamma scans with the HPGe detector set at Elevation 125' 6 1/4" (27' 3 1/4" or 8.31 m above the outer crane rail).
   - Position the detector at an angle of 24° to the plane of the platform.
   - Raise the HPGe to the prescribed elevation and 3 m from the surface of the dome.
   - Spectra to be spaced equidistant (4.9 m on center) throughout the 360° circumference of the Containment Building and as indicated on the Reactor Bldg Dome Ring 2 map.
   - Locate the first survey point with the center of the field of view at the 7.5° circumferential reference point and perform the remaining survey locations in a clockwise rotation.
   - **Perform a duplicate QC Count at sample point 40 (232.5°).**

Det. Elevation (ft.)	Feet above crane rail	Meters above crane rail	Detector Angle	Map	Sample Numbers
125' 6 1/4"	27' 3 1/4"	8.31 m	24°	Ring 2	M00025GS thru M00048GS

8. Perform a series of 24 gamma scans with the HPGe detector set at Elevation 134' 1 3/4" (35' 10 3/4" or 10.94 m above the outer crane rail).
   - Position the detector at an angle of 48° to the plane of the platform.
   - Raise the HPGe to the prescribed elevation and 3 m from the surface of the dome.
   - Spectra to be spaced equidistant (4.2 m on center) throughout the 360° circumference of the Containment Building and as indicated on the Reactor Bldg Dome Ring 3 map.
   - Locate the first survey point with the center of the field of view at the 0° circumferential reference point and perform the remaining survey locations in a clockwise rotation.
   - **Perform a duplicate QC Count at sample point 53 (60°).**

Det. Elevation (ft.)	Feet above crane rail	Meters above crane rail	Detector Angle	Map	Sample Numbers
134' 1 3/4"	35' 10 3/4"	10.94 m	48°	Ring 3	M00049GS thru M00072GS

9. Perform a series of 12 gamma scans with the HPGe detector set at Elevation 140' 7/8" (41' 9 7/8" or 12.75 m above the outer crane rail).
   - Position the detector at an angle of 64° to the plane of the platform.
   - Raise the HPGe to the prescribed elevation and 3 m from the surface of the dome.
   - Spectra to be spaced at 6.6 m, 13.2 m, 6.6 m, 13.2 m, 6.6 m, 13.2 m, 6.6 m, 13.2 m, 6.6 m, 13.2m and 6.6 m /(on center) throughout the 360° circumference of the Containment Building and as indicated on the Reactor Bldg Dome Ring 4 map.
   - Locate the first survey point with the center of the field of view at the 13.5° circumferential reference point and perform the remaining survey locations in a clockwise rotation.
   - **Perform a duplicate QC Count at sample point 83 (313.5°).**

Det. Elevation (ft.)	Feet above crane rail	Meters above crane rail	Detector Angle	Map	Sample Numbers
140' 7/8"	41' 9 7/8"	12.75 m	64°	Ring 4	M00073GS thru M00084GS

10. Perform a series of 6 gamma scans with the HPGe detector set at Elevation 140' 8 1/2" (42' 5 1/2" or 12.94 m above the outer crane rail).
    - Position the detector at an angle of 65° to the plane of the platform.
    - Raise the HPGe to the prescribed elevation and 3 m from the surface of the dome.
    - Spectra to be spaced equidistant (12.7 m on center) throughout the 360° circumference of the Containment Building and as indicated on the Reactor Bldg Dome Ring 4 map.
    - Locate the first survey point with the center of the field of view at the 52.5° circumferential reference point and perform the remaining survey locations in a clockwise rotation.

Det. Elevation (ft.)	Feet above crane rail	Meters above crane rail	Detector Angle	Map	Sample Numbers
140' 8 1/2"	42' 5 1/2"	12.94 m	65°	Ring 4	M00085GS thru M00090GS

11. Perform a series of 12 gamma scans scans with the HPGe detector set at Elevation 144' 5 15/16" (46' 2 15/16" or 14.08 m above the outer crane rail).
    - Position the detector at an angle of 72° to the plane of the platform.
    - Raise the HPGe to the prescribed elevation and 3 m from the surface of the dome.
    - Spectra to be spaced alternately at 3.9 m and 5.4 m (on center) throughout the 360° circumference of the Containment Building and as indicated on the Reactor Bldg Dome Ring 5 map.
    - Locate the first survey point with the center of the field of view at the 10° circumferential reference point and perform the remaining survey locations in a clockwise rotation.
    - **Perform a duplicate QC Count at sample point 101 (310°).**

Det. Elevation (ft.)	Feet above crane rail	Meters above crane rail	Detector Angle	Map	Sample Numbers
144' 5 15/16"	46' 2 15/16"	14.09 m	72°	Ring 5	M00091GS thru M00102GS

12. Perform a series of 7 gamma scans with the HPGe detector set at Elevation 147' 4 3/16" (49' 1 3/16" or 14.97 m above the outer crane rail).
    - Position the detector at an angle of 80° to the plane of the platform.
    - Raise the HPGe to the prescribed elevation and 3 m from the surface of the dome.
    - Spectra to be spaced at 4.4 m, 4.4 m, 4.7 m, 4.4 m, 4.7 m, 4.7 m, 4.7 m (on center) throughout the 360° circumference of the Containment Building and as indicated on the Reactor Bldg Dome Ring 6 map.
    - Locate the first survey point with the center of the field of view at the 0° circumferential reference point and perform the remaining survey locations in a clockwise rotation.
    - **Perform a duplicate QC Count at sample point 108 (252°).**

Det. Elevation (ft.)	Feet above crane rail	Meters above crane rail	Detector Angle	Map	Sample Numbers
147' 4 3/16"	49' 1 3/16"	14.97 m	80°	Ring 6	M00103GS thru M00109GS

13. Perform 1 gamma scan at the center of the Containment Dome with the HPGe detector set at Elevation 148' 7 11/16" (50' 4 11/16" or 15.36 m above the outer crane rail).
    - Position the detector at an angle of 90° to the plane of the platform.
    - Raise the HPGe to the prescribed elevation and 3 m from the surface of the dome.

Det. Elevation (ft.)	Feet above crane rail	Meters above crane rail	Detector Angle	Map	Sample Number
148' 7 11/16"	50' 4 11/16"	15.36 m	90°	Ring 6	M00110GS

Prepared by:	FSSE	Date:
Reviewed by:	LFSSRE	Date:

Attachment 1

Maps

December 13, 2006

Survey Unit F8111571

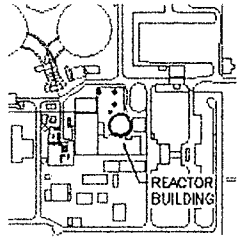

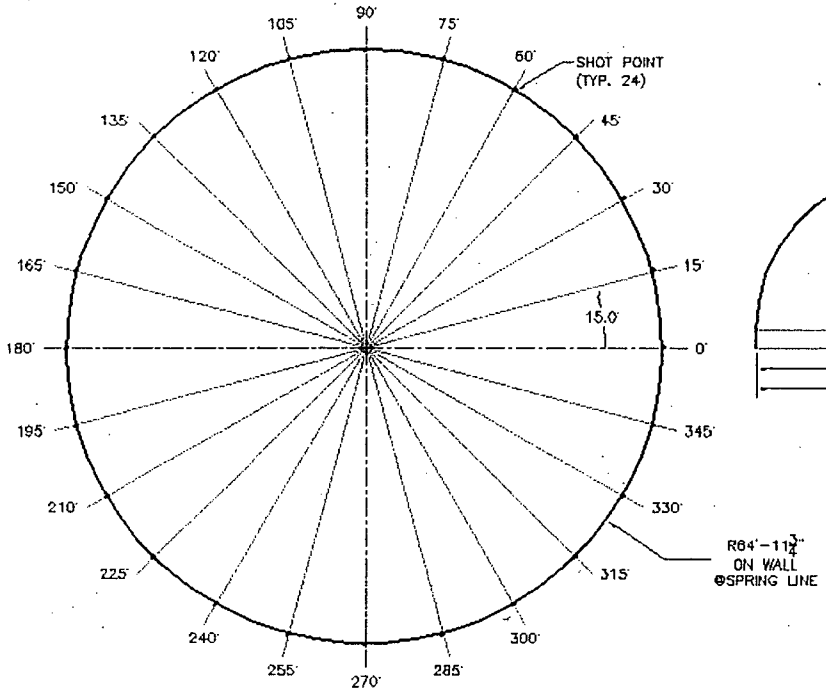

TOP VIEW

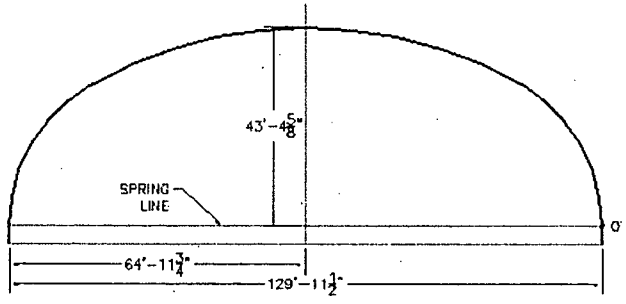

SECTION VIEW

SMUD
SACRAMENTO MUNICIPAL
UTILITY DISTRICT

Figure (RING 1)
Reactor Building DOME

Map F8111571-1

DWG: 811000.08_dome

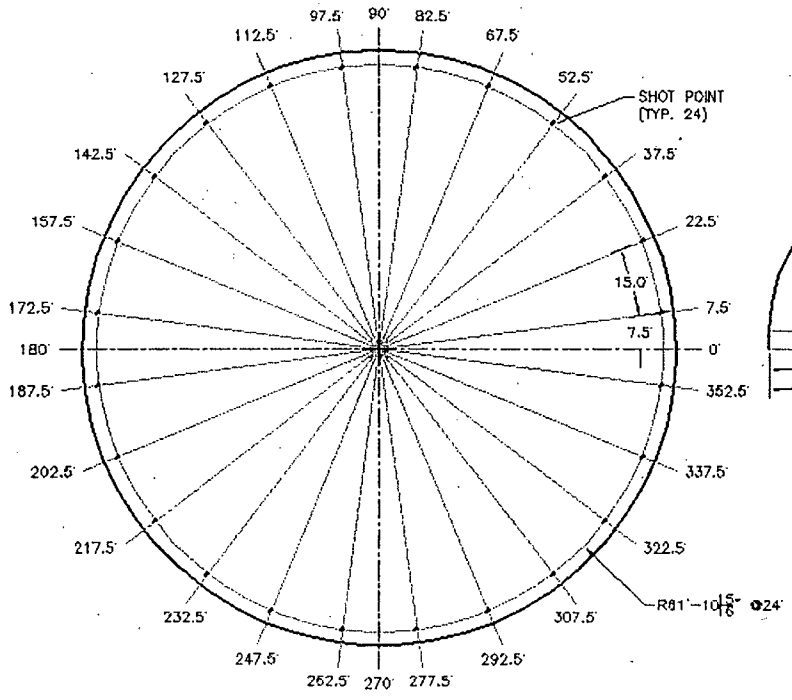

TOP VIEW

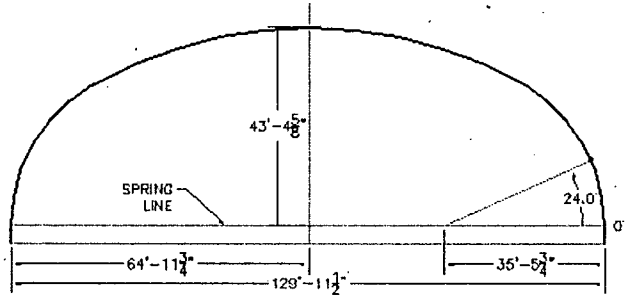

SECTION VIEW

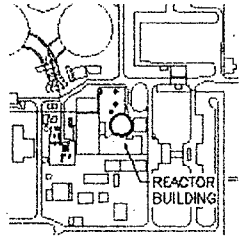

N

SMUD
SACRAMENTO MUNICIPAL
UTILITY DISTRICT

Figure (RING 2)
Reactor Building DOME
Map F8111571-2

DWG: 811000.06_dome

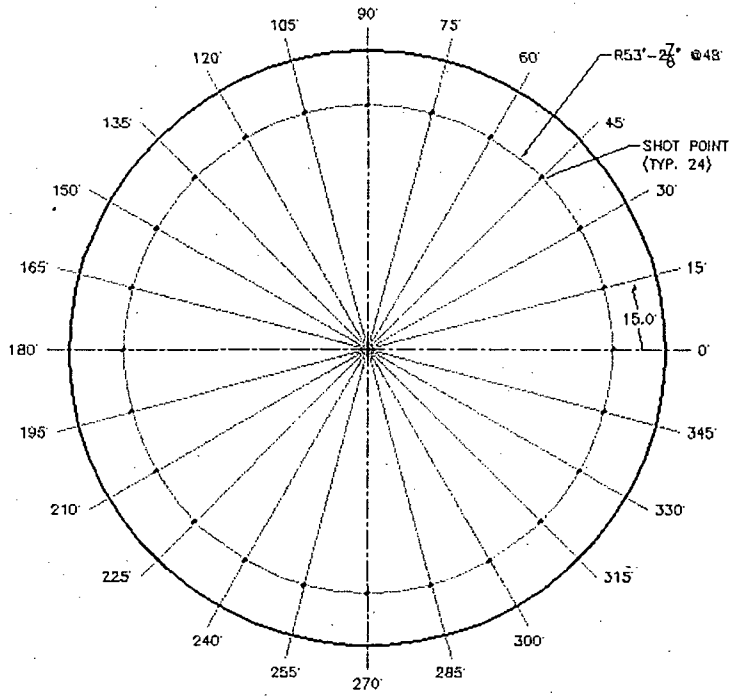

TOP VIEW

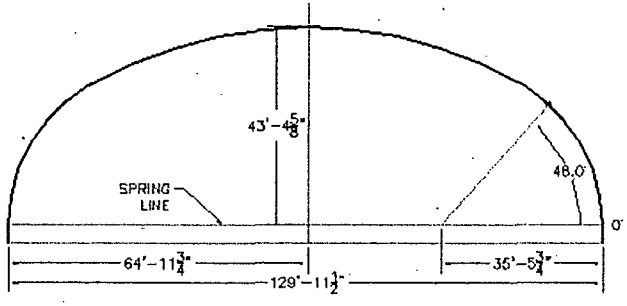

SECTION VIEW

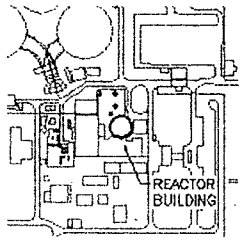

N

SMUD
SACRAMENTO MUNICIPAL
UTILITY DISTRICT

Figure (RING 3)
Reactor Building DOME

Map F8111571-3

DWG: 811000.06_dome

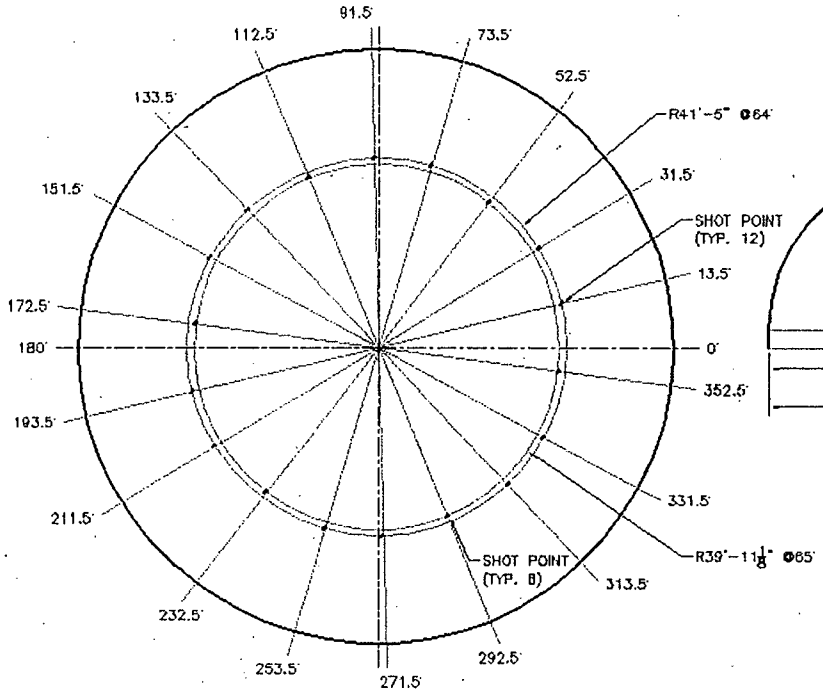

TOP VIEW

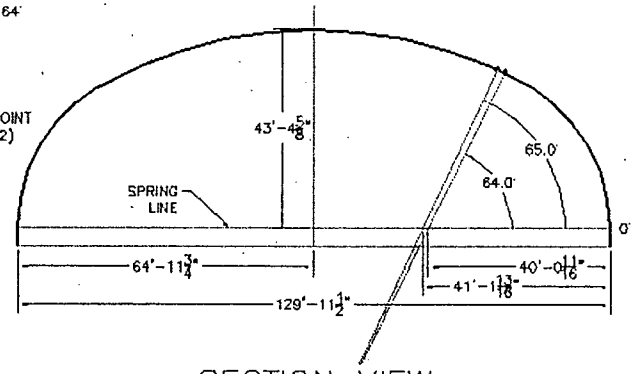

SECTION VIEW

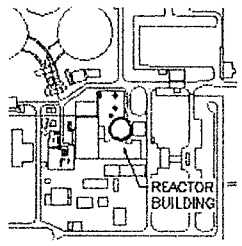

N

SMUD
SACRAMENTO MUNICIPAL
UTILITY DISTRICT

Figure (RING 4)
Reactor Building DOME

Map F8111571-4

DWG: 811000.08_dome

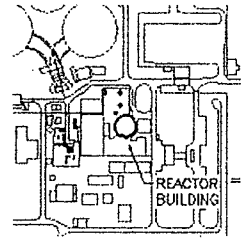

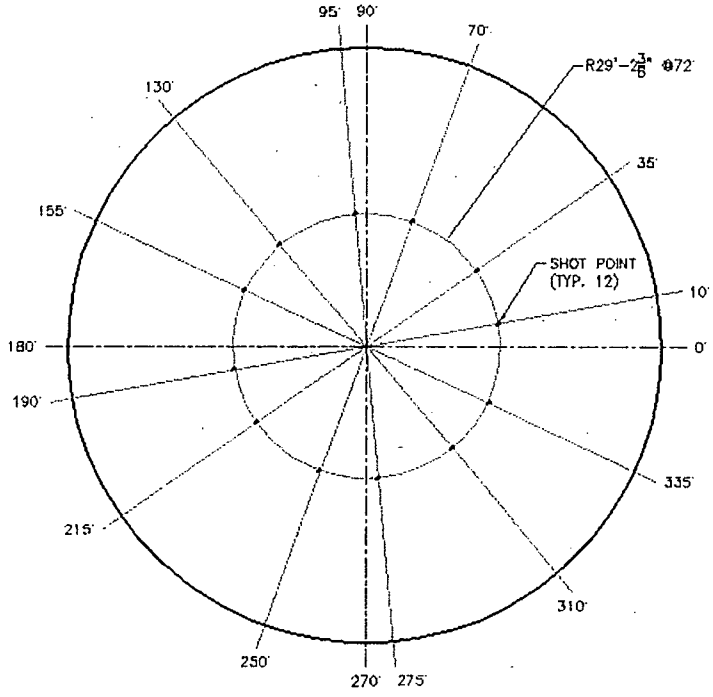

TOP VIEW

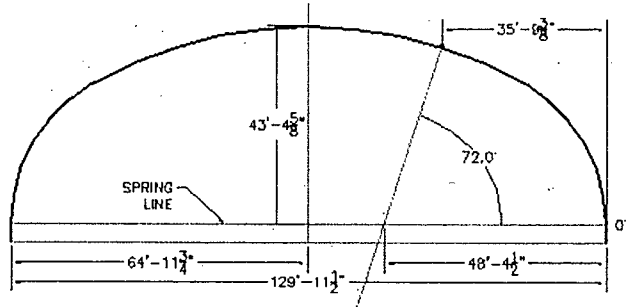

SECTION VIEW

SMUD
SACRAMENTO MUNICIPAL
UTILITY DISTRICT

Figure (RING 5)
Reactor Building DOME
Map F8111571-5

DWG: 811000.06_dome

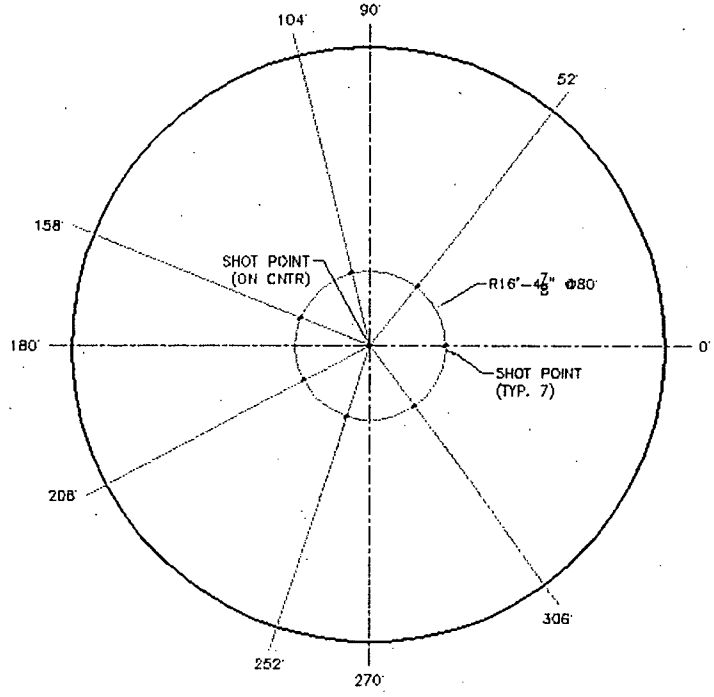

TOP VIEW

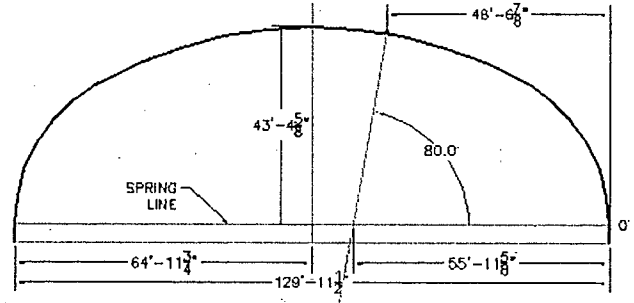

SECTION VIEW

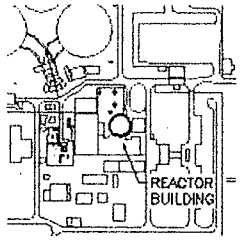

SMUD
SACRAMENTO MUNICIPAL
UTILITY DISTRICT

Figure (RING 6)
Reactor Building DOME
Map F8111571-6

DWG: 811000.06_dome

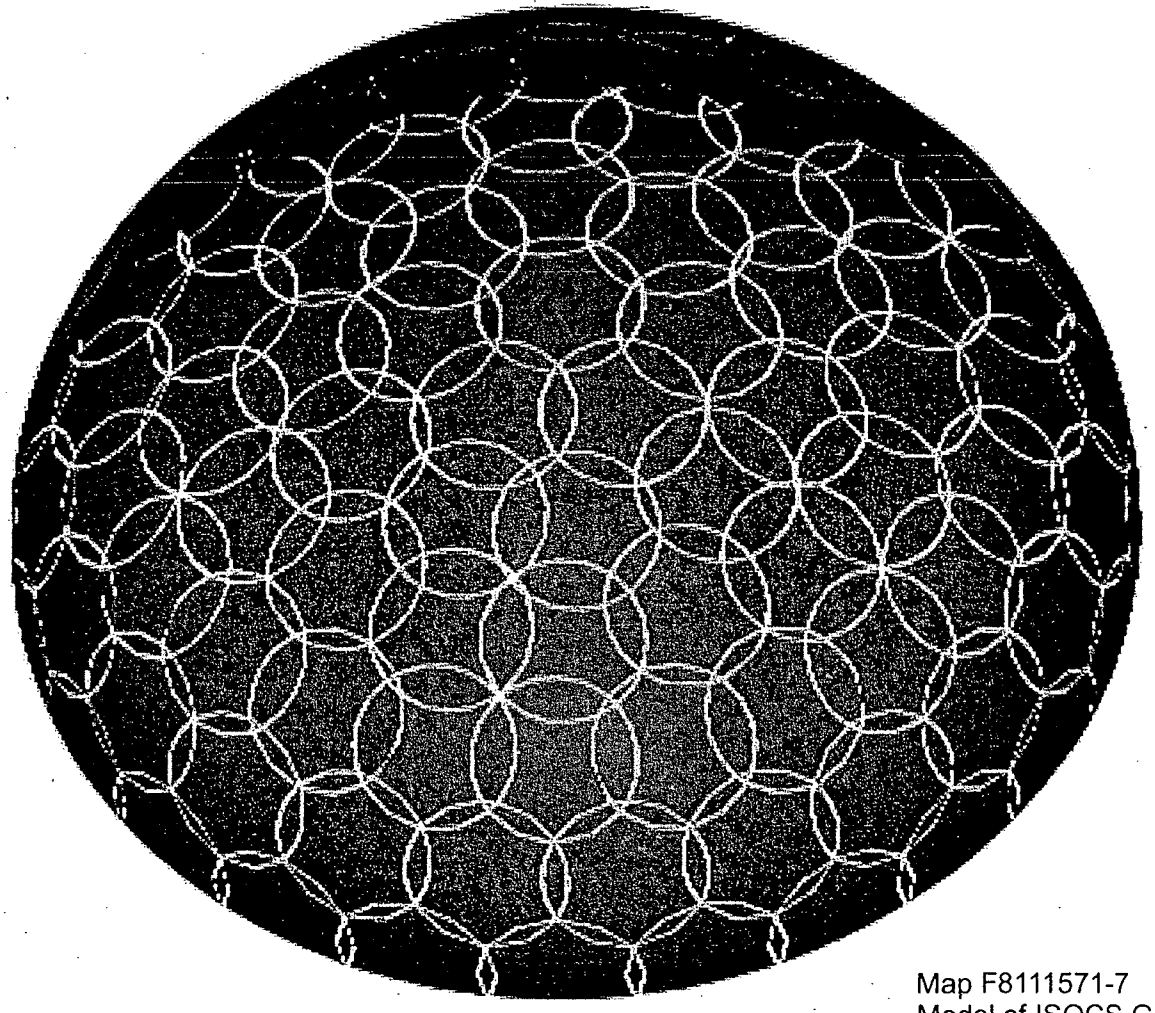

Map F8111571-7
Model of ISOCS Gamma Scans

Attachment 2

Instrumentation

December 13, 2006

Survey Unit F8111571

Table 2-1. Survey Unit Instrumentation

Instrument Model	Detector Serial No.	MDC (dpm/100 cm²)
ISOCS HPGe	1983920	2,000 dpm/100 cm^2 Cs-137 2,000 dpm/100 cm^2 Co-60
Lab counter for smears	12037719	200 dpm/100 cm^2

Table 2-2. Investigation Criteria and DCGL

Parameter	Value (dpm/100 cm^2)
Investigation Criteria - Scan	N/A
Investigation Criteria – Scan	102,000 Cs-137 20,000 Co-60
$DCGL_W$	81,600 Cs-137 20,400 Co-60
$DCGL_{EMC}$	1,215,000 Cs-137 281,500 Co-60

Attachment 3

Investigation

December 13, 2006

Survey Unit F8111571

(none required)

Attachment 4

Data Assessment

December 13, 2006

Survey Unit F8111571

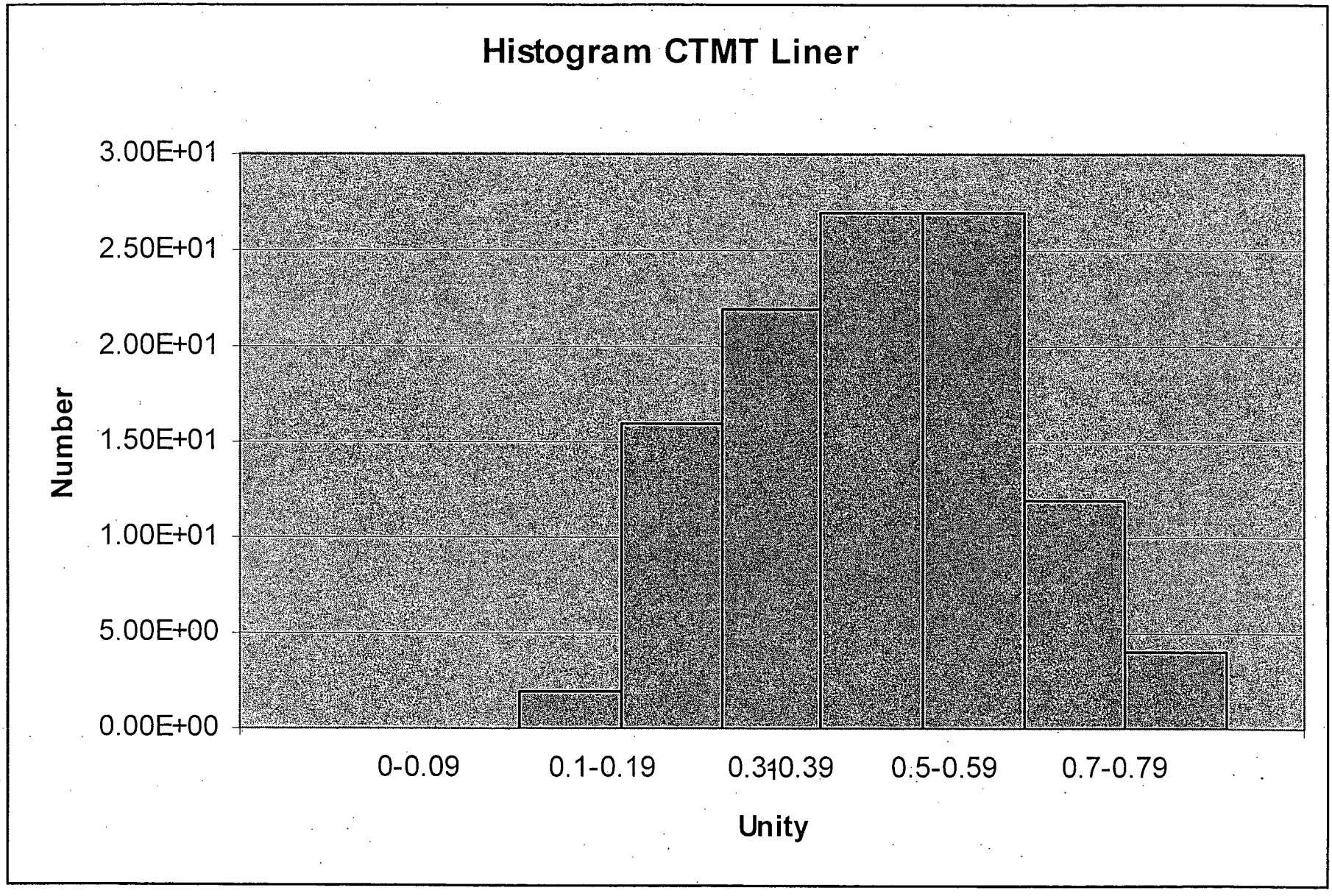
Histogram CTMT Liner
3.00E+01
2.50E+01
2.00E+01
1.50E+01
1.00E+01
5.00E+00
0.00E+00
Number
0-0.09
0.1-0.19
0.3-0.39
0.5-0.59
0.7-0.79
Unity

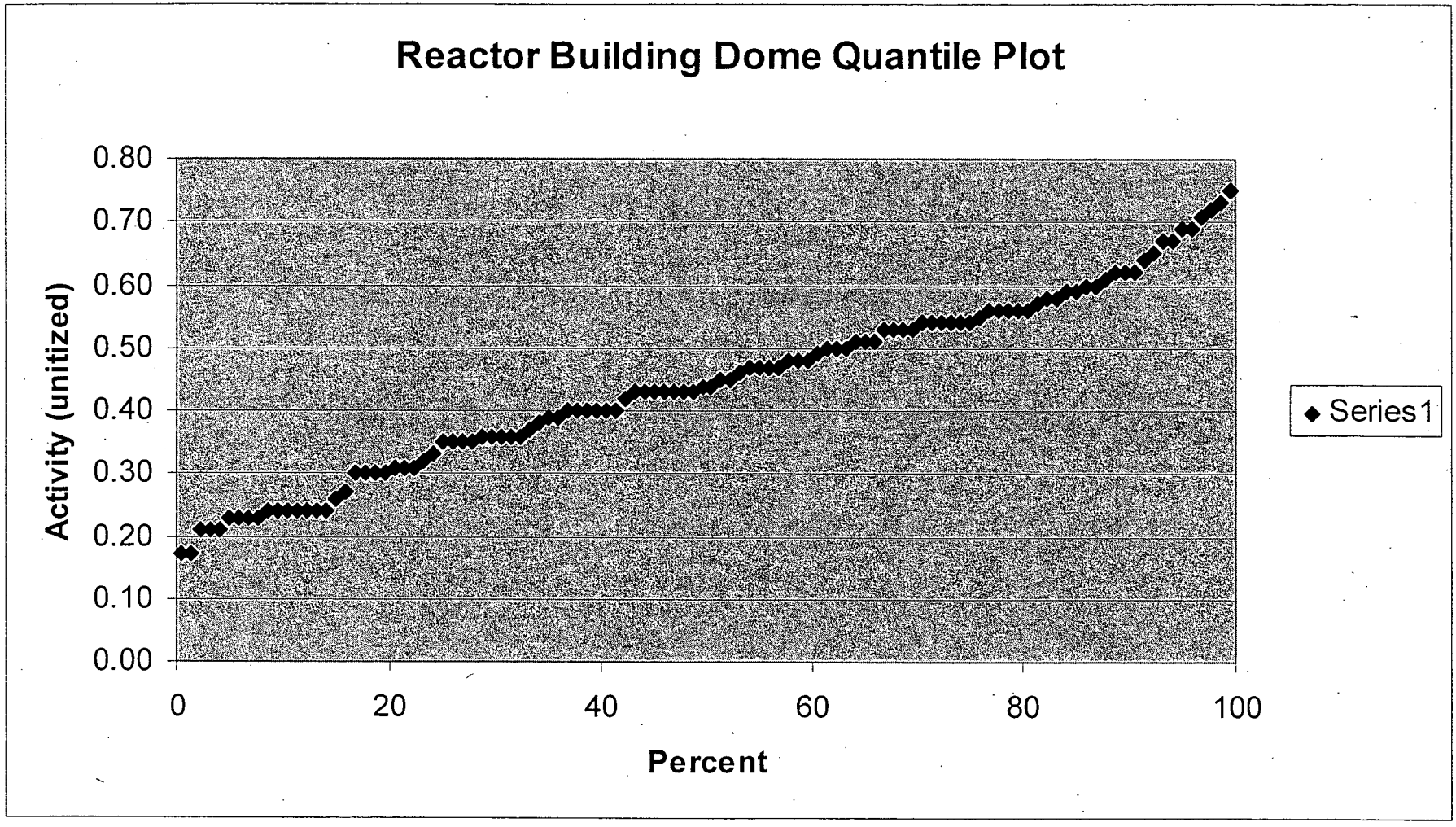
Reactor Building Dome Quantile Plot
Activity (unitized)
0.80
0.70
0.60
0.50
0.40
0.30
0.20
0.10
0.00
0
20
40
60
80
100
Percent
Series1