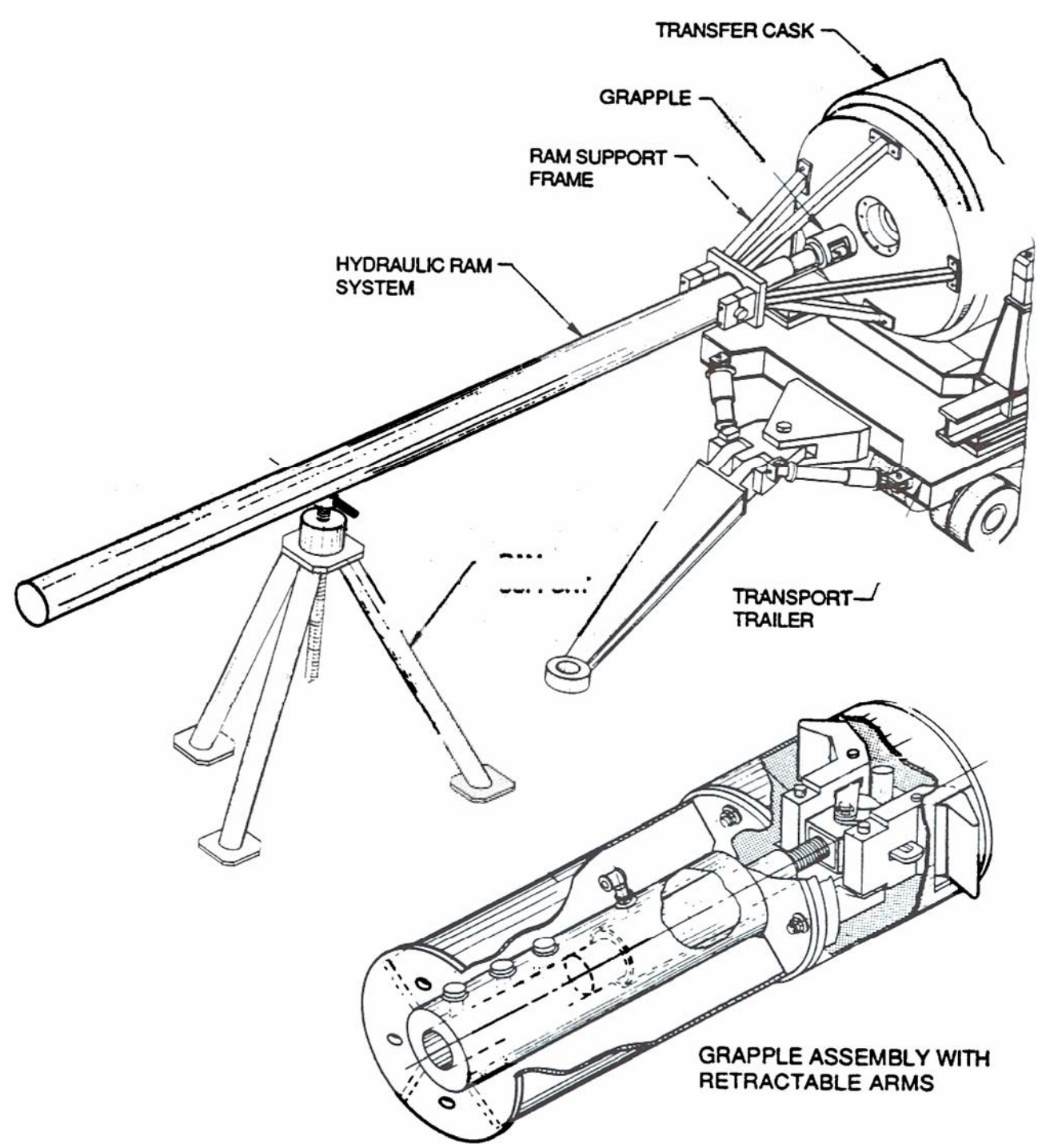

Calvert Cliffs Nuclear Power Plant, Independent Spent Fuel Storage Installation	NUHOMS HYDRAULIC RAM SYSTEM	USAR Figure 1.3-5 Revision 15