UNITED STATES
NUCLEAR REGULATORY COMMISSION
WASHINGTON, D. C. 20555

March 11, 1993

Docket Nos. 50-390
and 50-391

APPLICANT: Tennessee Valley Authority (TVA)

FACILITY: Watts Bar Nuclear Plant, Units 1 and 2

SUBJECT: MEETING SUMMARY - MARCH 23, 1993 MEETING TO DISCUSS USE OF U-BOLTS AT WATTS BAR (TAC M63594)

REFERENCE: Meeting notice by P. S. Tam, February 3, 1993

On March 2, 1993, NRC and TVA representatives met at NRC headquarters in Rockville, Maryland, to discuss technical issues related to TVA's use of U-bolts at the Watts Bar site. Enclosure 1 lists the meeting participants.

The staff originally expressed its concern in Inspection Report 50-390/92-201, dated September 21, 1992. The staff's concern originated from the discovery of an unstable U-bolt support during the inspection. TVA implemented a comprehensive program to resolve the concern, with the intent to provide assurance that the 350 U-bolt supports, comprising about 3% of the support population, will remain stable for the life of the plant. TVA's presentation is set forth in the slides used in the meeting (Enclosure 2). As a result of the program, TVA has replaced 15 U-bolts with other supports, and is upgrading others by using Belleville spring stacks to ensure the existence of the preload. TVA stated that some of these U-bolts would be difficult to replace with other support designs due to space limitation.

The staff's review of TVA's submittal concerning U-bolts, dated December 22, 1992, is ongoing. The staff will factor information obtained in the meeting into its review.

Peter S. Tam

Peter S. Tam, Senior Project Manager
Project Directorate II-4
Division of Reactor Projects - I/II
Office of Nuclear Reactor Regulation

Enclosures:
1. Participant list
2. TVA Slides

cc w/enclosures:
See next page

NRC FILE CENTER COPY

9303190335 930311
PDR ADOCK 05000390
A PDR

DF01 1/1 memo4

March 11, 1993

Docket Nos. 50-390
and 50-391

APPLICANT: Tennessee Valley Authority (TVA)

FACILITY: Watts Bar Nuclear Plant, Units 1 and 2

SUBJECT: MEETING SUMMARY - MARCH 2, 1993 MEETING TO DISCUSS USE OF U-BOLTS AT WATTS BAR (TAC M63594)

REFERENCE: Meeting notice by P. S. Tam, February 3, 1993

On March 2, 1993, NRC and TVA representatives met at NRC headquarters in Rockville, Maryland, to discuss technical issues related to TVA's use of U-bolts at the Watts Bar site. Enclosure 1 lists the meeting participants.

The staff originally expressed its concern in Inspection Report 50-390/92-201, dated September 21, 1992. The staff's concern originated from the discovery of an unstable U-bolt support during the inspection. TVA implemented a comprehensive program to resolve the concern, with the intent to provide assurance that the 350 U-bolt supports, comprising about 3% of the support population, will remain stable for the life of the plant. TVA's presentation is set forth in the slides used in the meeting (Enclosure 2). As a result of the program, TVA has replaced 15 U-bolts with other supports, and is upgrading others by using Belleville spring stacks to ensure the existence of the preload. TVA stated that some of these U-bolts would be difficult to replace with other support designs due to space limitation.

The staff's review of TVA's submittal concerning U-bolts, dated December 22, 1992, is ongoing. The staff will factor information obtained in the meeting into its review.

Original signed by
Peter S. Tam, Senior Project Manager
Project Directorate II-4
Division of Reactor Projects - I/II
Office of Nuclear Reactor Regulation

Enclosures:
1. Participant list
2. TVA Slides

cc w/enclosures:
See next page

OFFICE	PDII-4/LA	EMEB	EMEB/SC	PDII-4/PM	PDII-4/D
NAME	MSanders	JFair	TChan	PTam:as	FHebdon
DATE	3/9/93	3/10/93	3/10/93	3/9/93	3/11/93

ENCLOSURE 1

LIST OF PARTICIPANTS

MEETING TO DISCUSS U-BOLT ISSUES

March 2, 1993

Name	Affiliation
Raymond K. Alexander	TVA Engineering
Jerry L. Bitner	R. Cloud Associates
Robert Cloud	R. Cloud Associates
John Fair	NRC/NRR/Mechanical Engineering Branch
Michael Glasman	NRC Resident Inspector at Watts Bar
Ruben Hernandez	TVA Watts Bar Engineering
Sarat W. Korde	EBASCO
William S. LaPay	Westinghouse
Sam K. Malur	NRC/NRR/Special Inspection Branch
Wayne Massie	TVA Site Licensing
Don Norkin	NRC/NRR/Special Inspection Branch
George Pannell	TVA Watts Bar Site Licensing
P. Svensson	R. Cloud Associates
Peter Tam	NRC/NRR/Project Directorate II-4

Distribution

Docket File (Enclosures 1 and 2)
NRC & Local PDRs (Enclosures 1 and 2)
WBN Reading (Enclosures 1 and 2)
T. Murley/F. Miraglia (Enclosure 1)
J. Partlow (Enclosure 1)
S. Varga (Enclosure 1)
G. Lainas (Enclosure 1)
F. Hebdon (Enclosure 1)
V. Nerses (Enclosures 1 and 2)
P. Tam (Enclosures 1 and 2)
M. Sanders (Enclosure 1)
OGC (Enclosure 1)
E. Jordan (Enclosure 1)
S. Malur (Enclosure 1)
D. Norkin (Enclosure 1)
ACRS (10) (Enclosure 1)
L. Plisco, EDO (Enclosure 1)
P. Fredrickson (Enclosures 1 and 2)
E. Merschoff (Enclosures 1 and 2)
G. Walton (Enclosures 1 and 2)

cc: Licensee & Service List

180063

Enclosure 2

PRESENTATION TO NRC

WATTS BAR U-BOLT ENGINEERING AND CONSTRUCTION PROGRAM

MARCH 2, 1993

Agenda

- **Background**
- **U-bolts at WBN**
- **Development of U-Bolt Engineering Methodology**
  - Experimental Research
  - Analytical Research
  - Experimental-Analytical Correlation
  - Design Methodology
  - Design Enhancement
- **Implementation of U-Bolt Engineering Program at WBN**
  - Design
  - Construction
  - Test
- **Summary & Conclusion**

Background

- An unstable U-bolt support was found at WBN
- A comprehensive engineered U-Bolt program was instituted to resolve the issue
- This program is now being implemented at WBN
- When complete, assurance will exist that U-bolt supports at WBN will remain stable for plant life

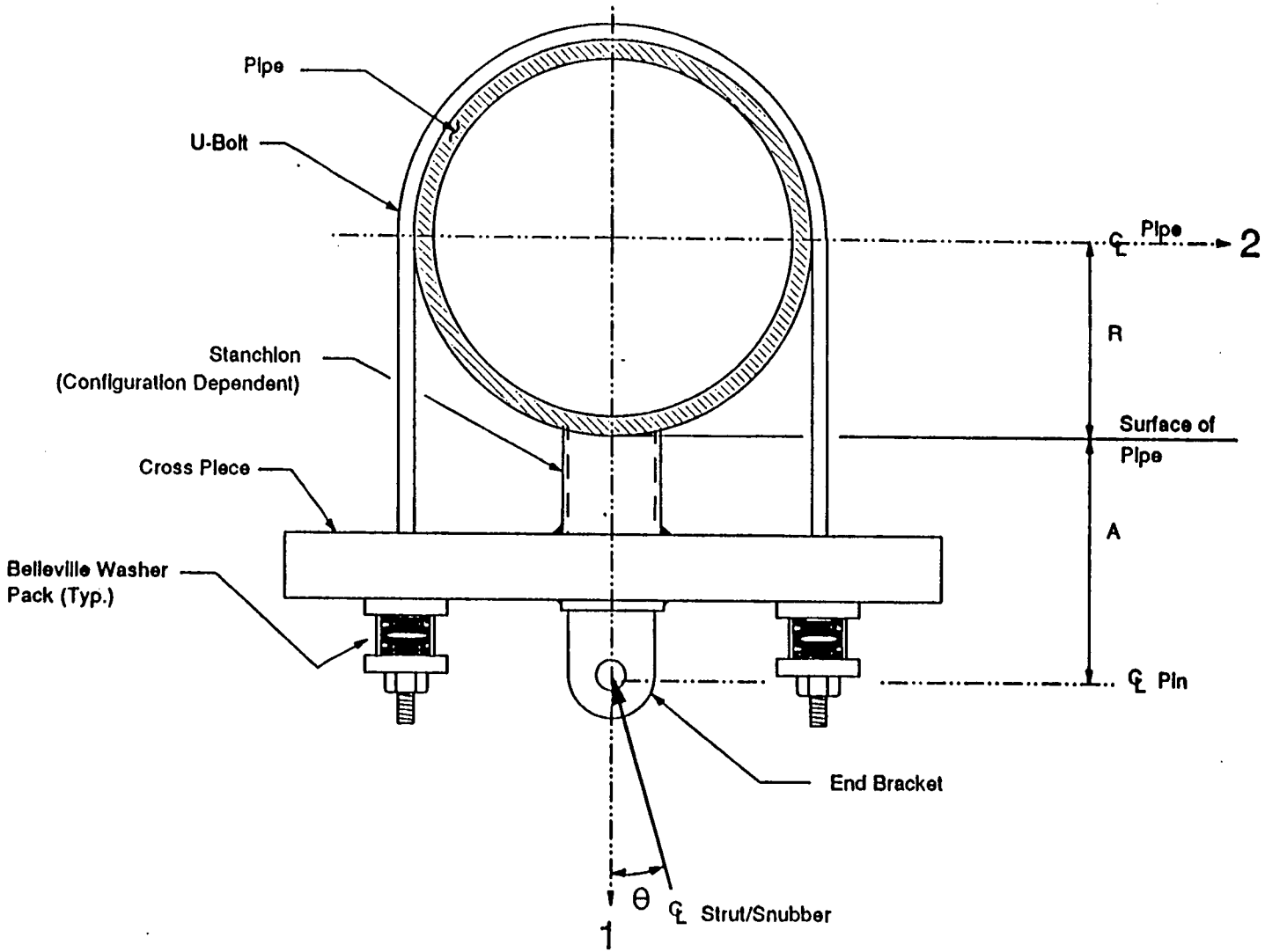

U-Bolt Assembly w/Single Strut

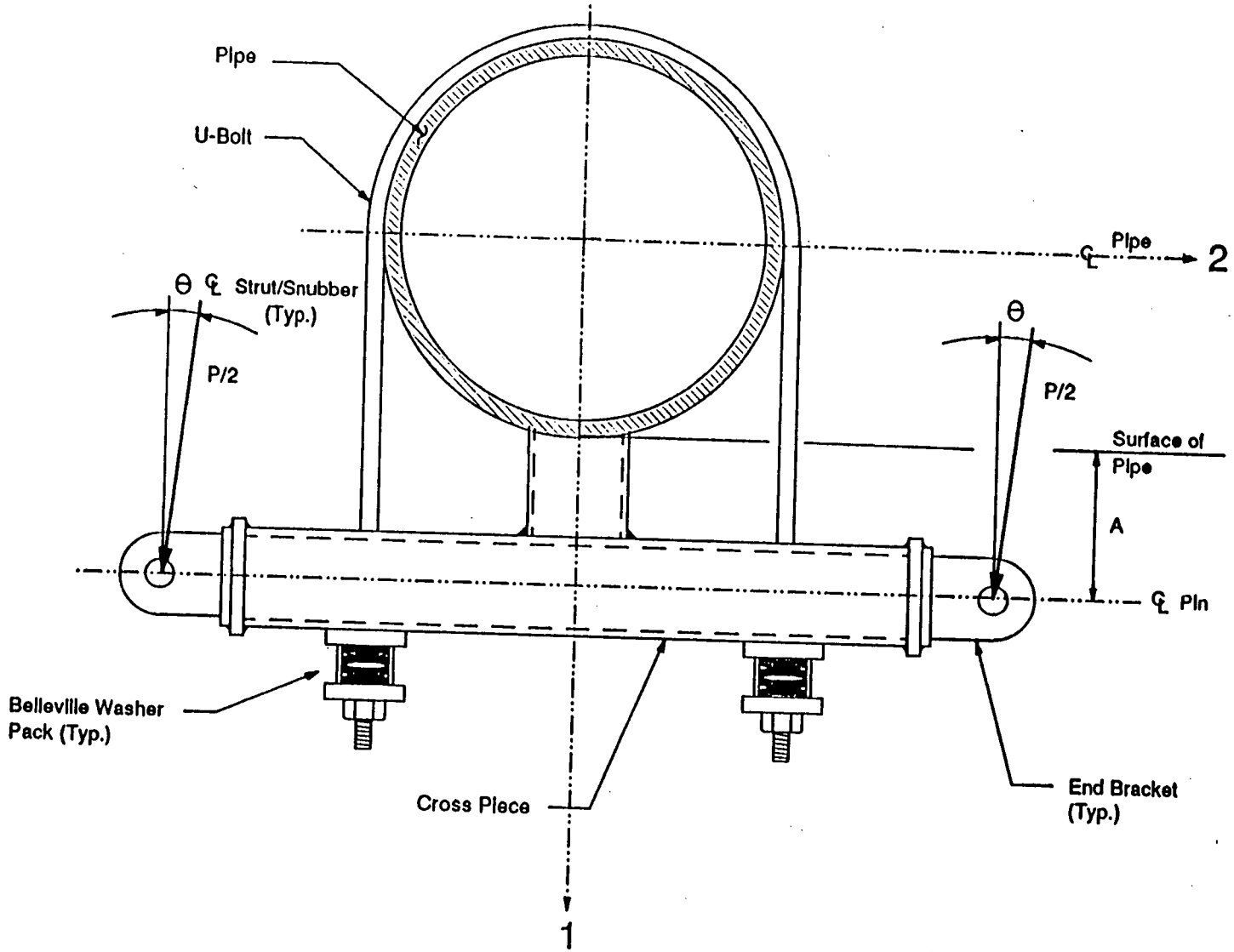

U-Bolt Assembly (Trapeze Arrangement)

U-Bolt Size Distribution

336 Total

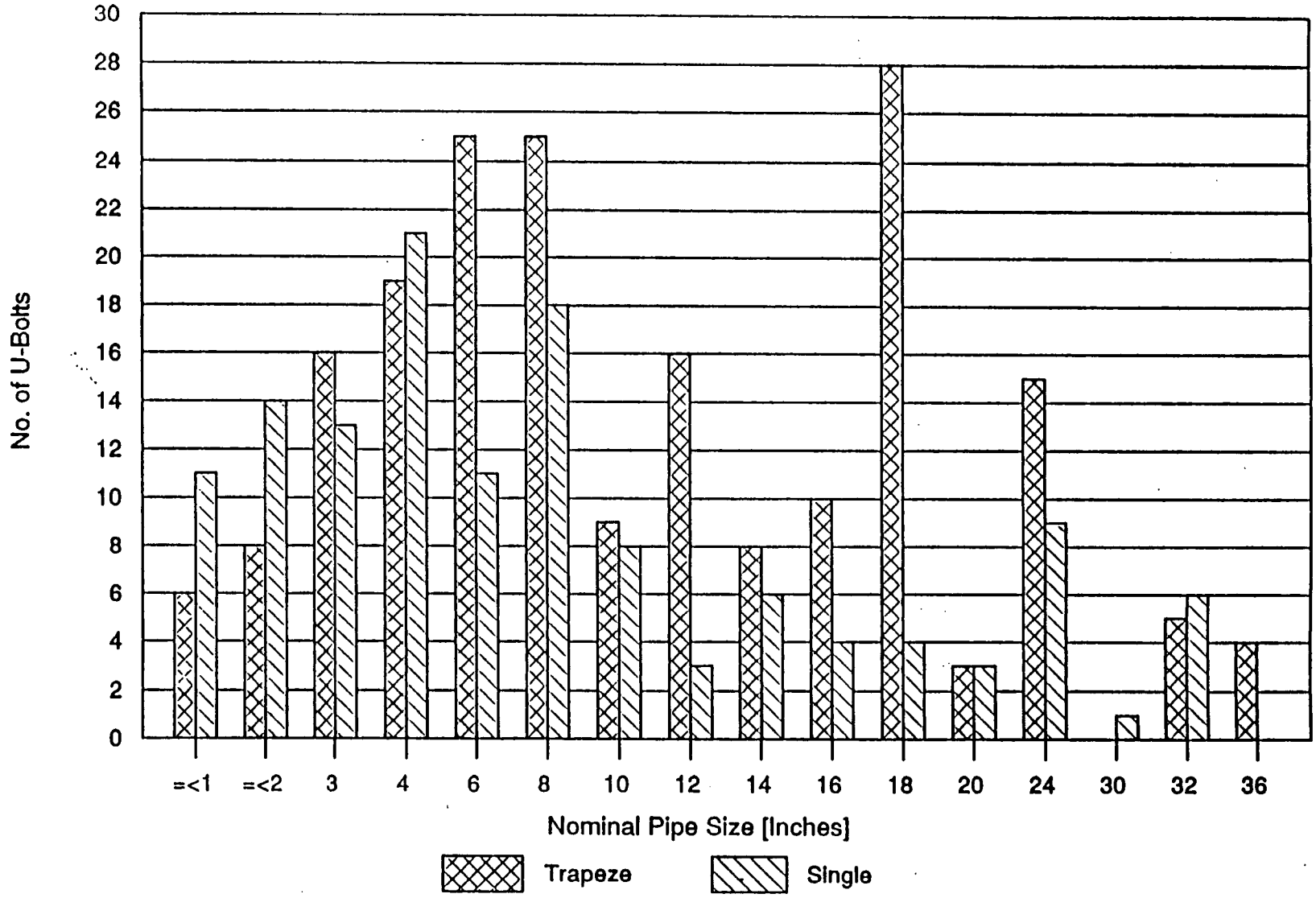

Development of U-Bolt Engineering Methodology

- **Experimental Research and Tests**

Goal:

Establish basic physical behavior of U-bolt pipe supports

- Extensive static testing characterizing response attributes

- Full-scale dynamic testing for seismic simulation

- Factual understanding of U-bolt characteristics established by actual test results

Full Scale Tests

TEST CATEGORY	TEST SPECIMEN (Size/Material)			
	4" Sch160 SS	10" Sch40 SS	10" Sch80 CS	32" x 1.45" Wall CS
Bolt Torque vs. Bolt Tension	X	X	X	X
Friction Test	X	X	X	X
Load Distribution		X		
Thermal Cycling	X (560F)	X (250F)		X (560F)
Creep Test	X	X		X
Normal Vibration		X		
Seismic Simulation		X		

X = Test Performed

TSTMTRX.DRW

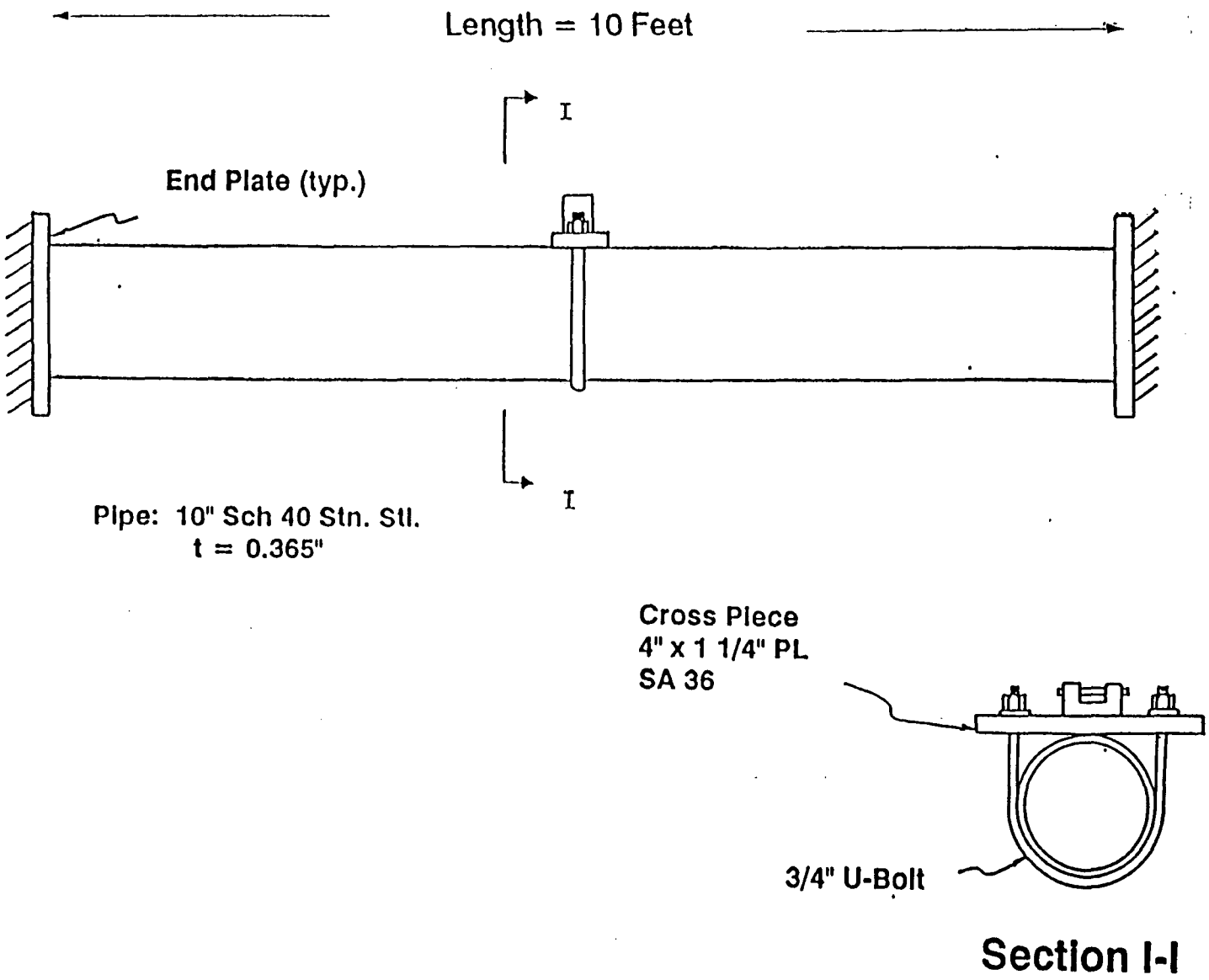

Test Configuration Represented by Analysis

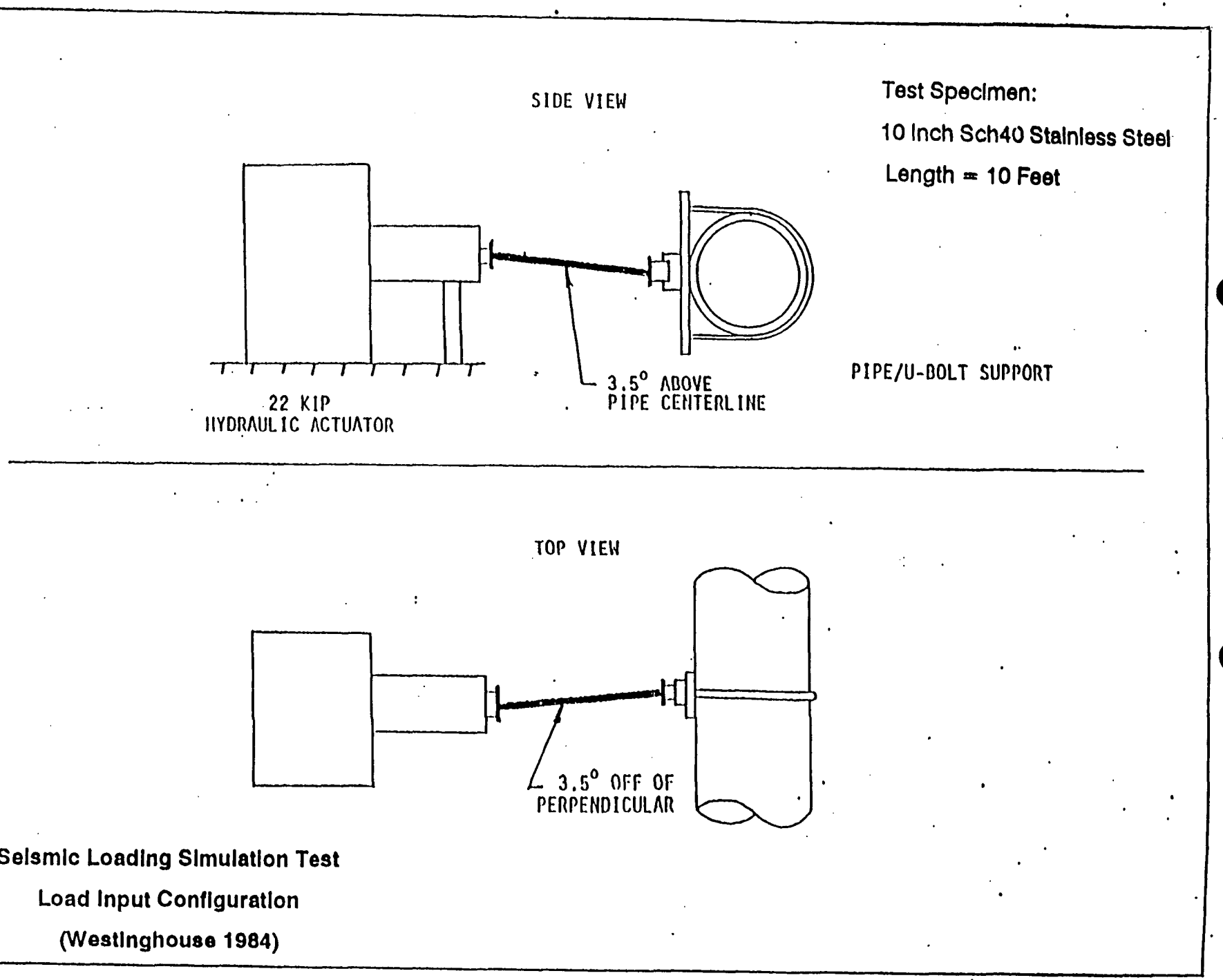

Seismic Loading Simulation Test

Load Input Configuration

(Westinghouse 1984)

Seismic Loading Simulation Test
Envelope of Load Amplitude
(Westinghouse 1984)

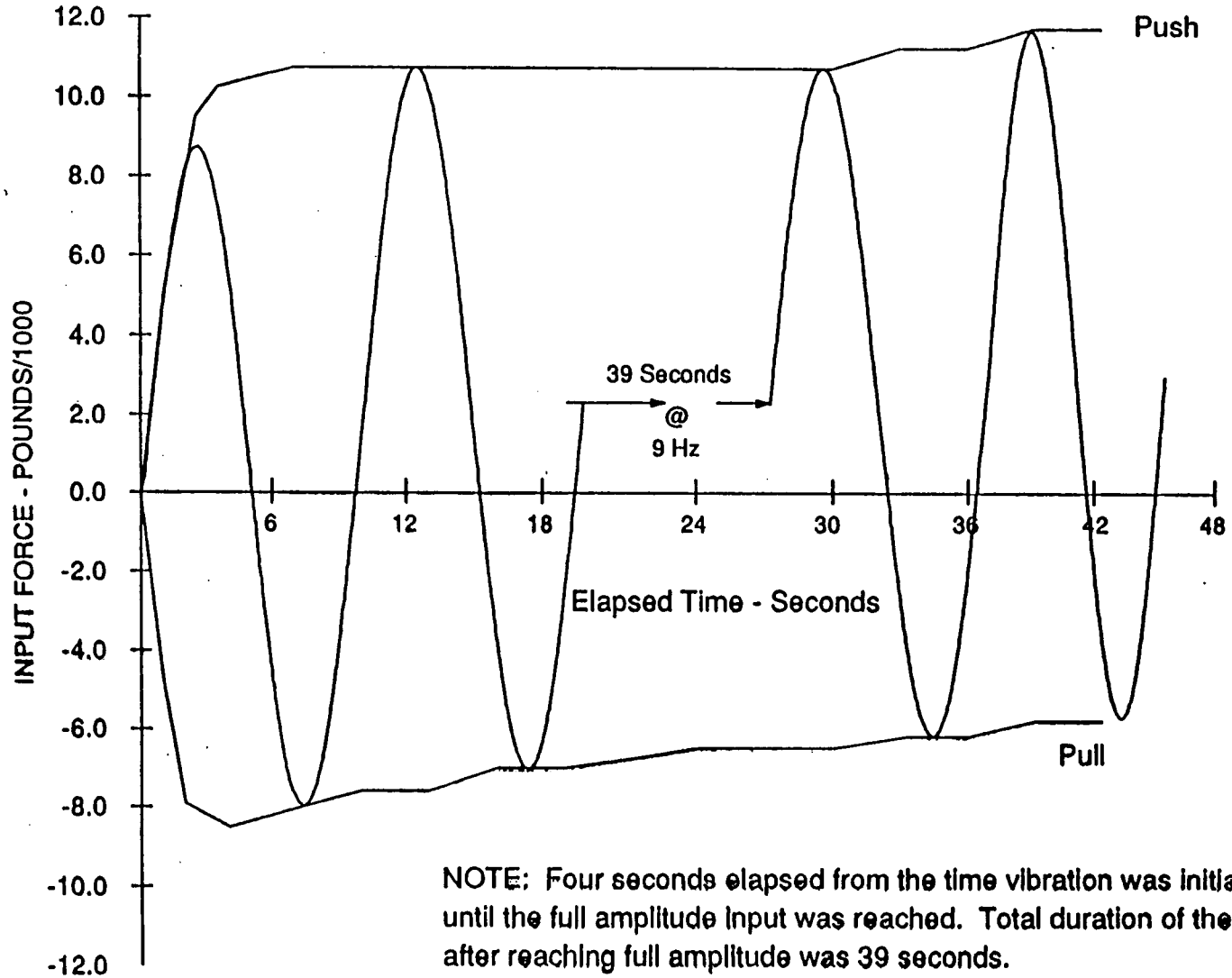

NOTE: Four seconds elapsed from the time vibration was initiated until the full amplitude input was reached. Total duration of the test after reaching full amplitude was 39 seconds.

Development of U-Bolt Engineering Methodology

- **Analytical Research**

  Goals

  - Develop quantitative understanding of U-bolt physical behavior
  - Rationalize all experimental results
  - Develop analytical-experimental correlations
  - Establish ability to make correct analytical predictions for
    - Maximum support capacity
    - Initiation of slippage
    - U-bolt stress relaxation
    - U-bolt long term load retention capability
    - U-bolt support dynamic stability

Development of U-Bolt Engineering Methodology

- **Analytical Research**

Analyses

- Configuration & Load Cases Studied

- Categories of Analysis
  - Stress and stability analysis
  - Thermal cycling analysis
  - Plastic analysis of pipe limit load

Analyses Performed in Conjunction with Full-Scale Tests

- **Test Configurations Analyzed:**
  - 4 Inch Sch 160 Stainless Steel
  - 10 Inch Sch 40 Stainless Steel
  - 10 Inch Sch 80 Carbon Steel
  - 32 Inch T=1.45, Main Steam
- **Load Cases Analyzed:**
  - Preload Application
  - Preload + Thermal
  - Preload + Thermal + Pressure
  - Preload + Thermal + Pressure + "Push" Strut Load

Stress and Stability Analyses

- **Comprehensive Finite Element Analysis (ANSYS)**
  - Non-Linear Gap/Friction Elements
  - Stability Analyses Under Inclined Strut Loads
  - Slippage Analyses Under Lateral Loading
- **Model Verification Analyses**
  - Elastic-Plastic Elements
  - Reduced Element Size to Confirm Mesh Adequacy
  - Convergence Study

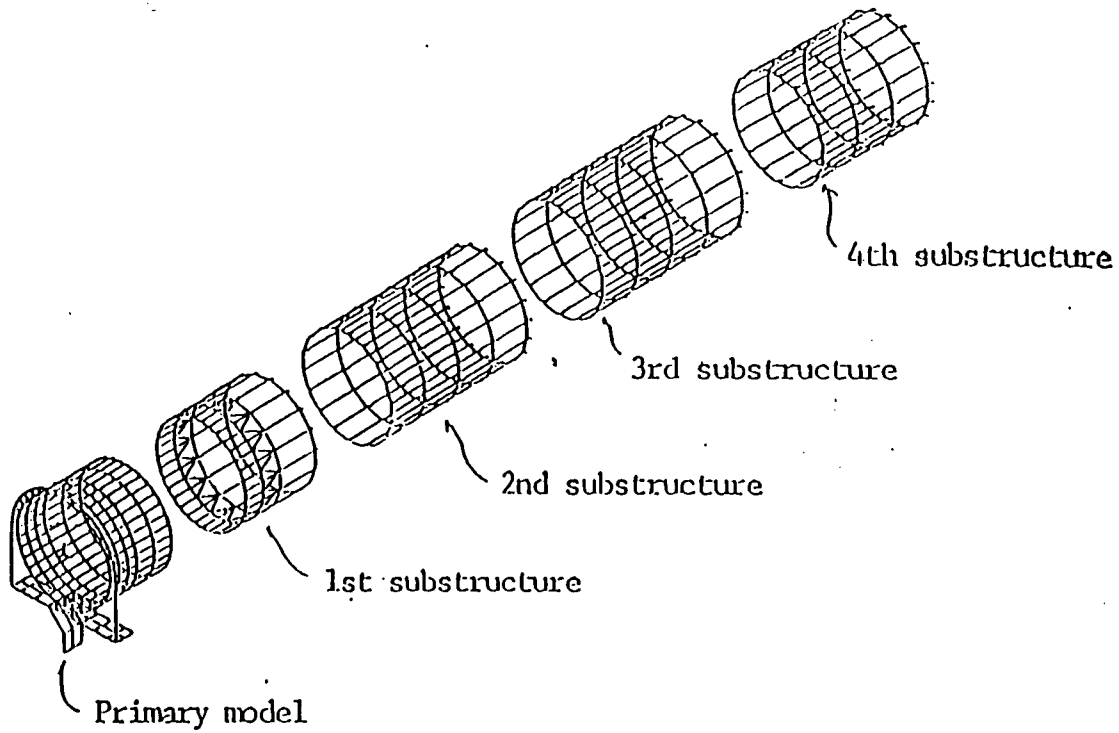

FEA Model Used for Stability Evaluations

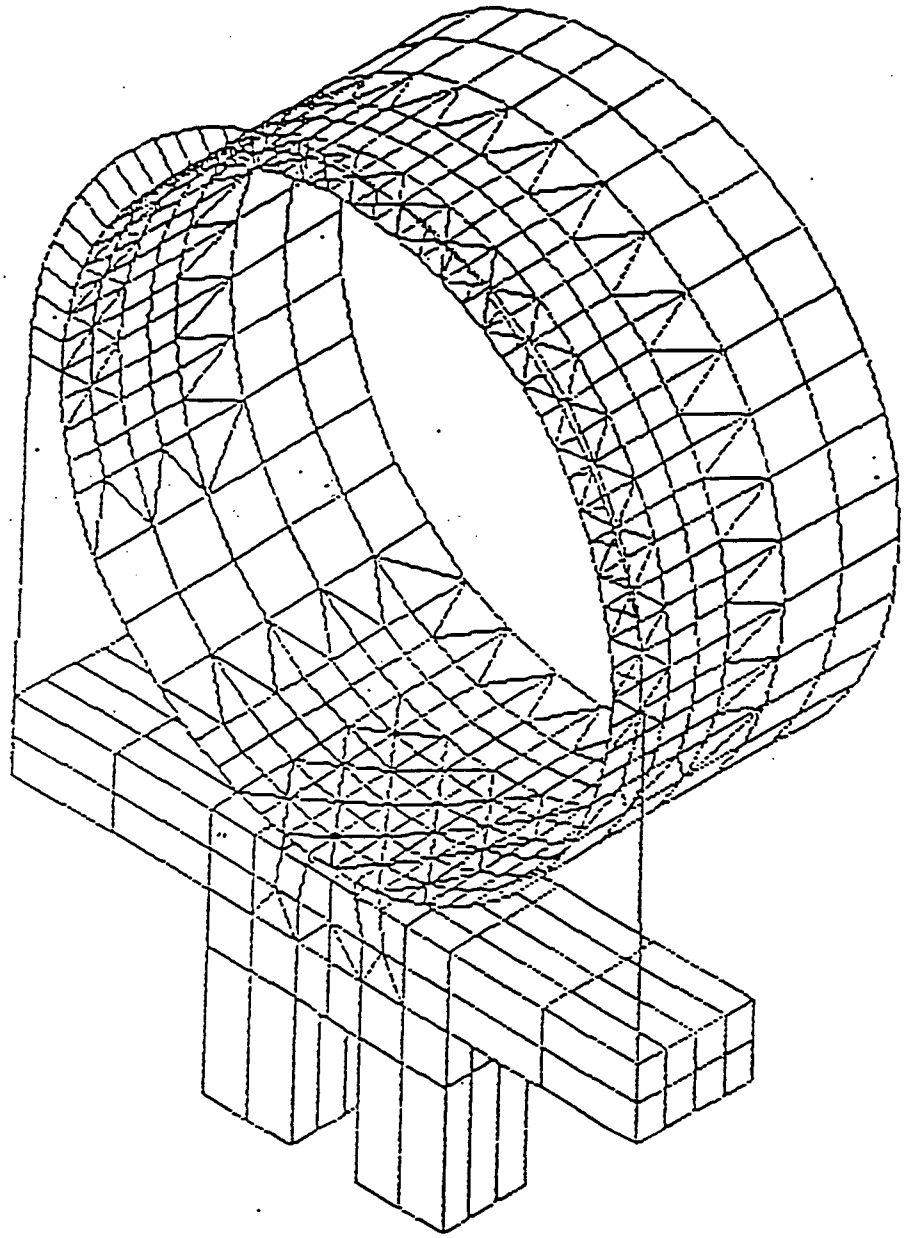

Refined Model Used for Mesh Verification
(Detailed Portion)

Thermal Cycling Analysis

Purpose:

- Evaluate Potential for Preload Loss due to Extreme Loading

Parameters:

- 10 Inch Sch 40 TP304 Stainless Steel
- Elasto-Plastic Elements with Temperature-Dependent Yield Stress
- High Initial Preload
- Pipe Temperature Cycled Twice to 400 deg F

Conclusions:

- All Preload Losses Take Place During the First Full Cycle
- Behavior Consistent with Full-Scale Tests

TH-CYCL.DRW

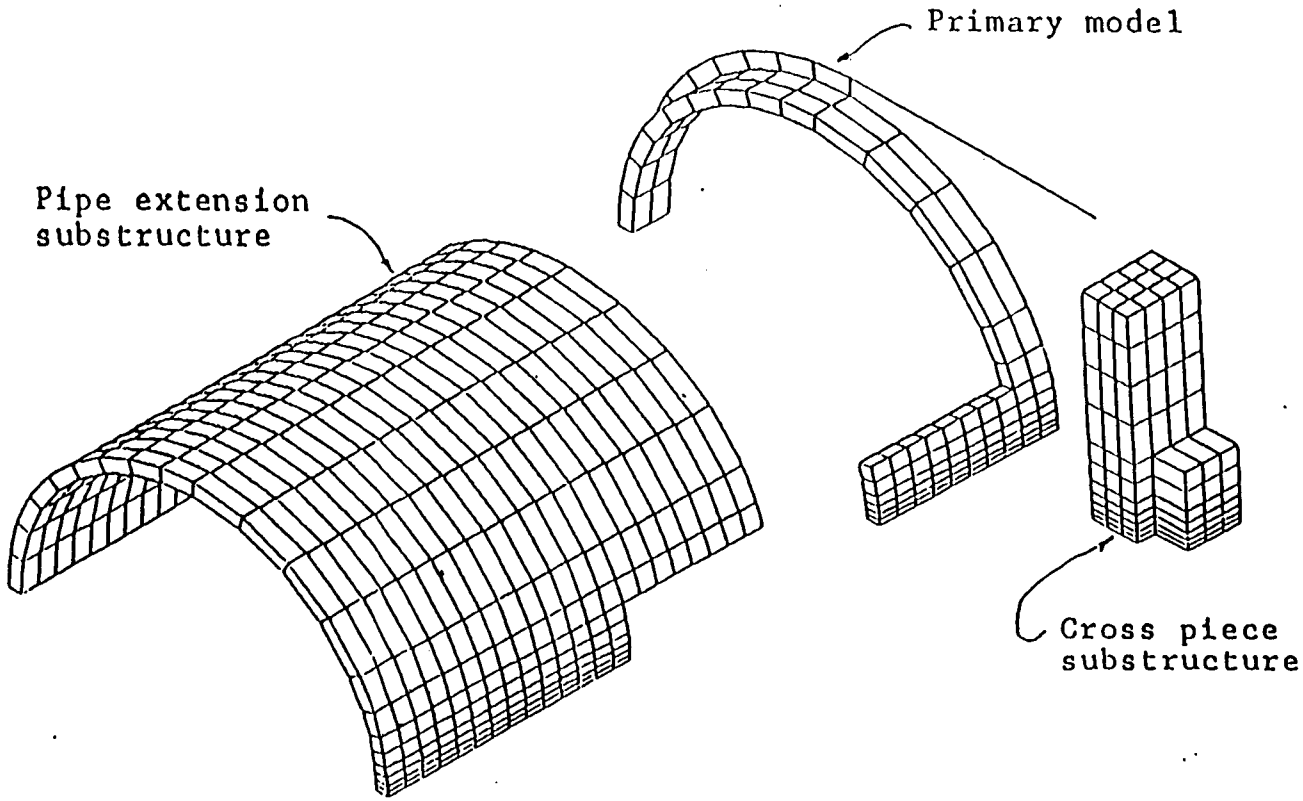

Elasto-Plastic Model for Thermal Cycling Analyses

Plastic Analysis of Pipe Limit Load

- **Elastic-Plastic Models:**
  - Detailed Representation in Support Region
  - Full Pipe Spans Included to Represent General Piping Loads Causing Global Pipe Bending Moments and Stresses
- **Local Pipe Limit Loads Determined as per ASME III NB-3228**
  - Pipe Sizes 6 to 30 Inches
  - Varying Pipe Wall Thickness and Support Width
  - Pipe Span Lengths Consistent with Standard Practice
  - Pipe General Membrane Stresses Included by Method of Load Application
- **Closed-Form Expression Developed for Limit Load as Function of:**
  - Yield Stress
  - Pipe Size
  - Pipe Wall Thickness
  - Support Width

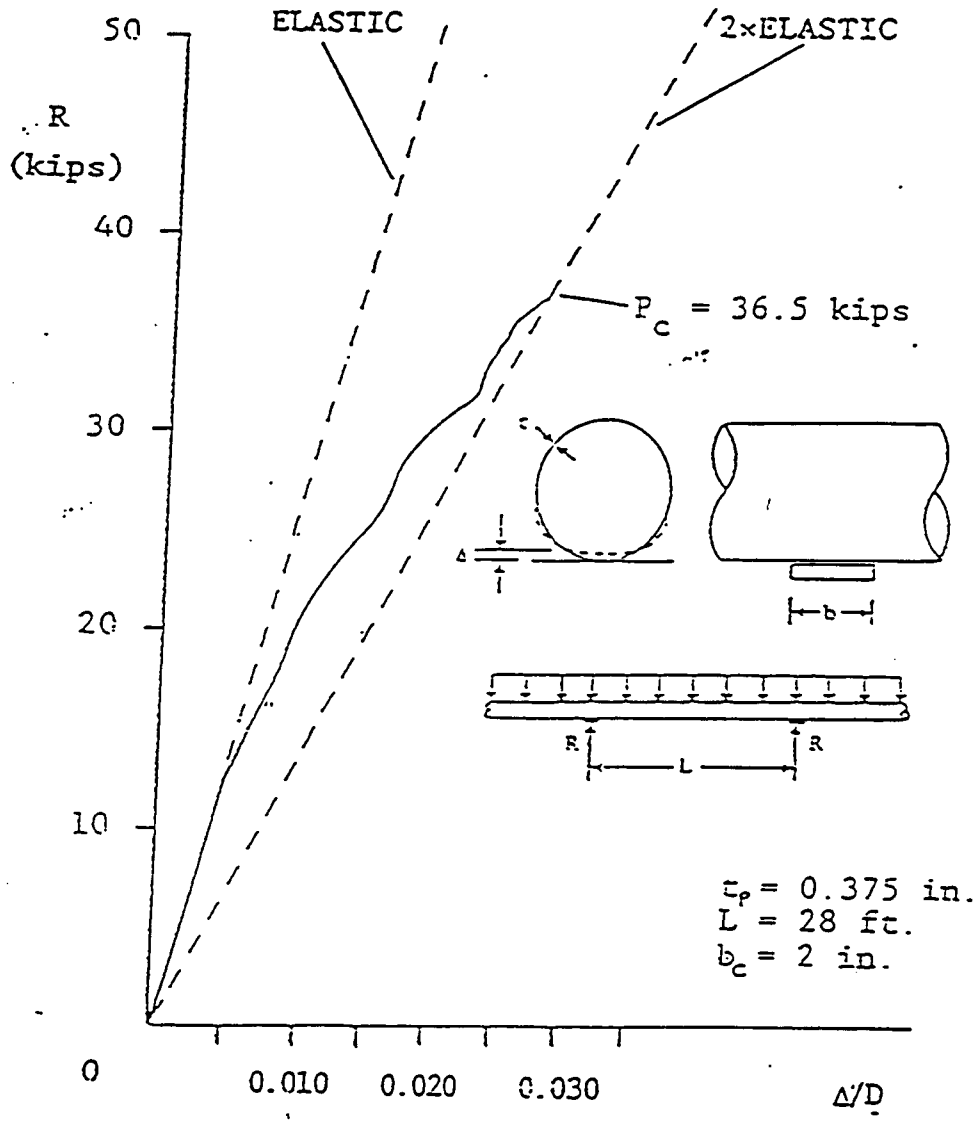

Local, Plastic Analysis of Pipe at Support Contact

Pipe Size: D = 18", t = 3/8"

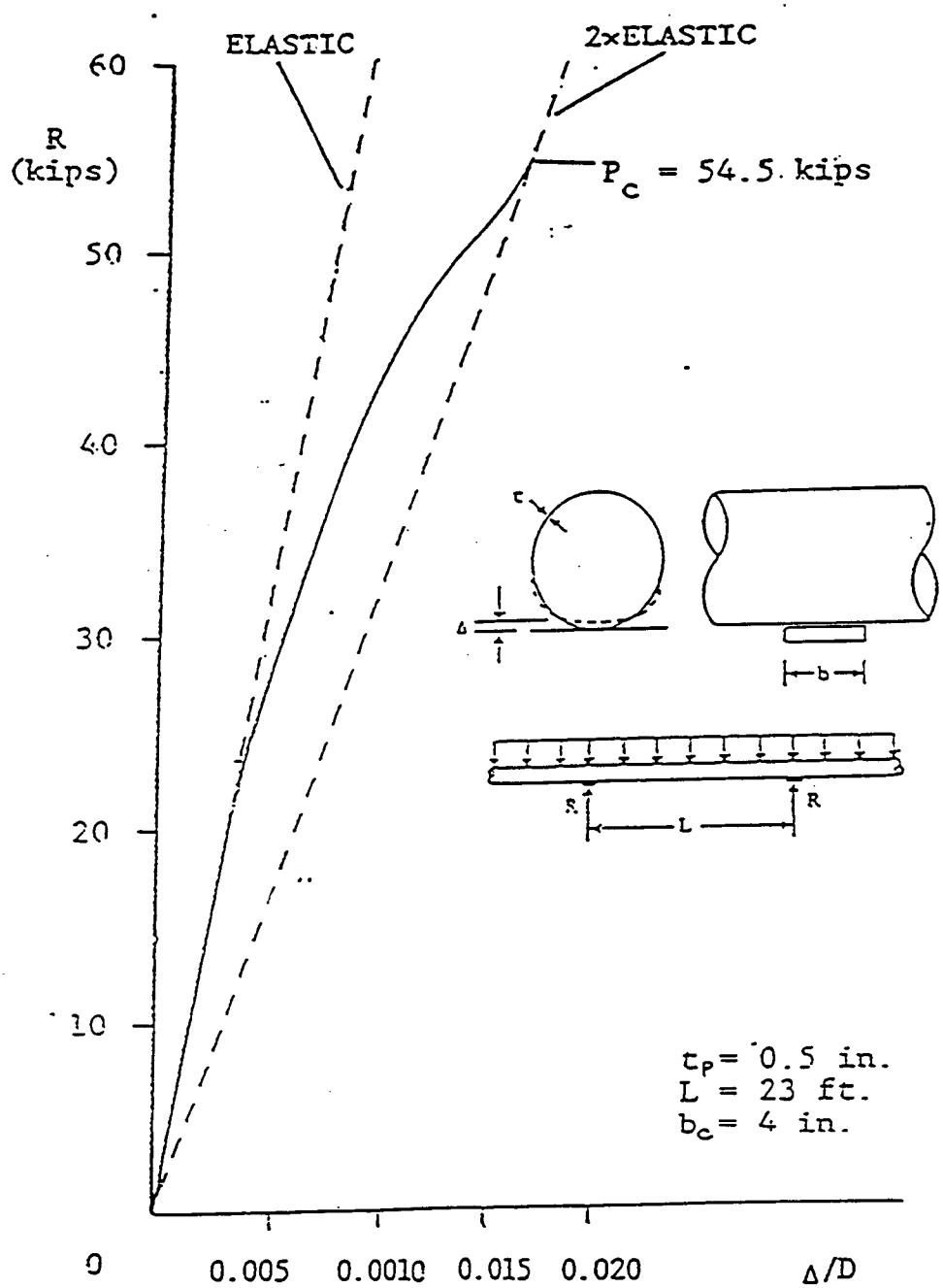

Local, Plastic Analysis of Pipe at Support Contact

Pipe Size: D = 12", t = 1/2"

Correlation of Analysis and Test Results

- U-Bolt Tension Variation with Varying Strut Load
- Rotational Slippage Resistance
- Pipe Stresses
- U-Bolt Tension Change During Thermal Cycling

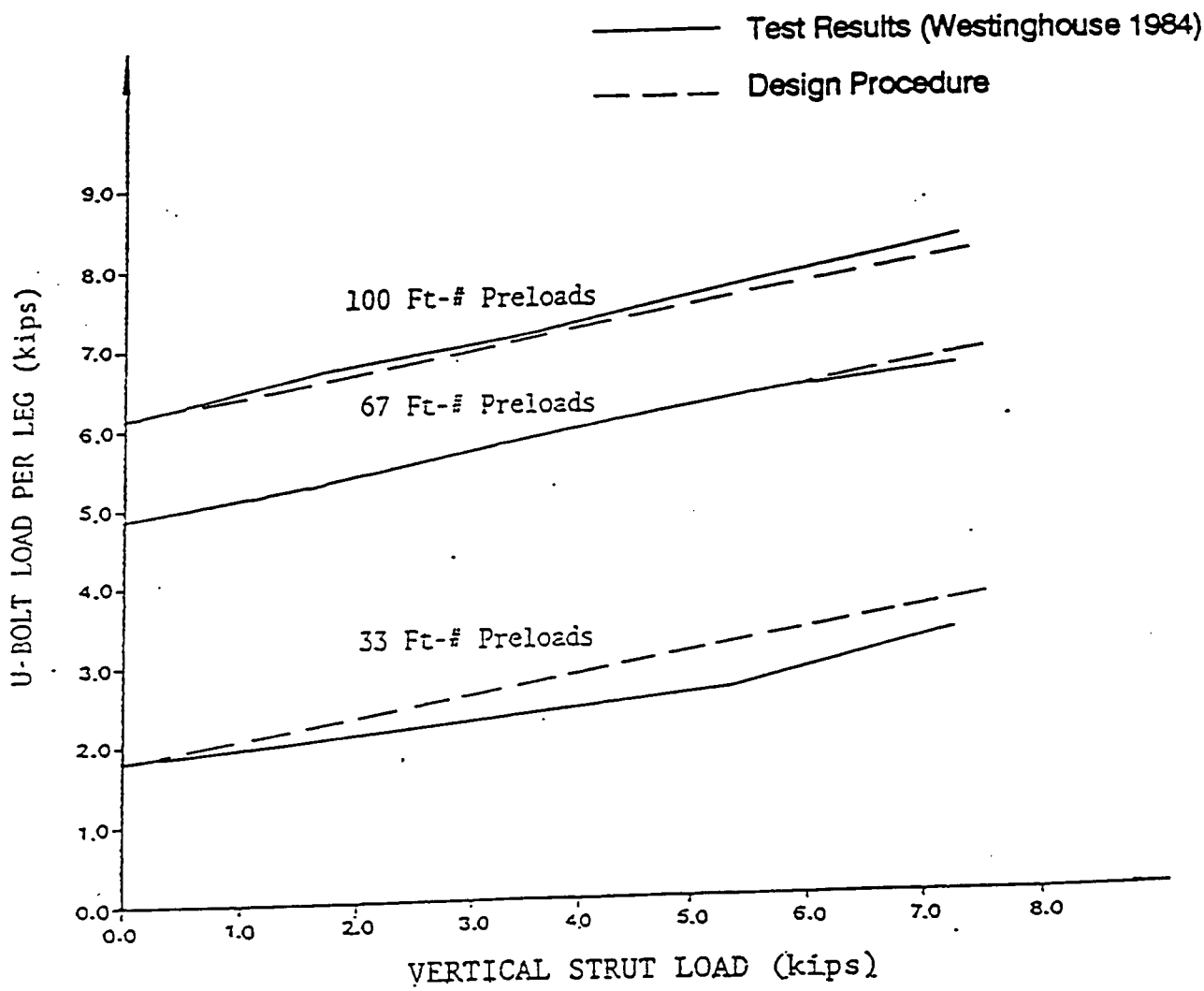

Variation in U-Bolt Tension Under Tensile Support Load

Comparison of Tests with Design Procedure

10" Sch40 Stainless Steel

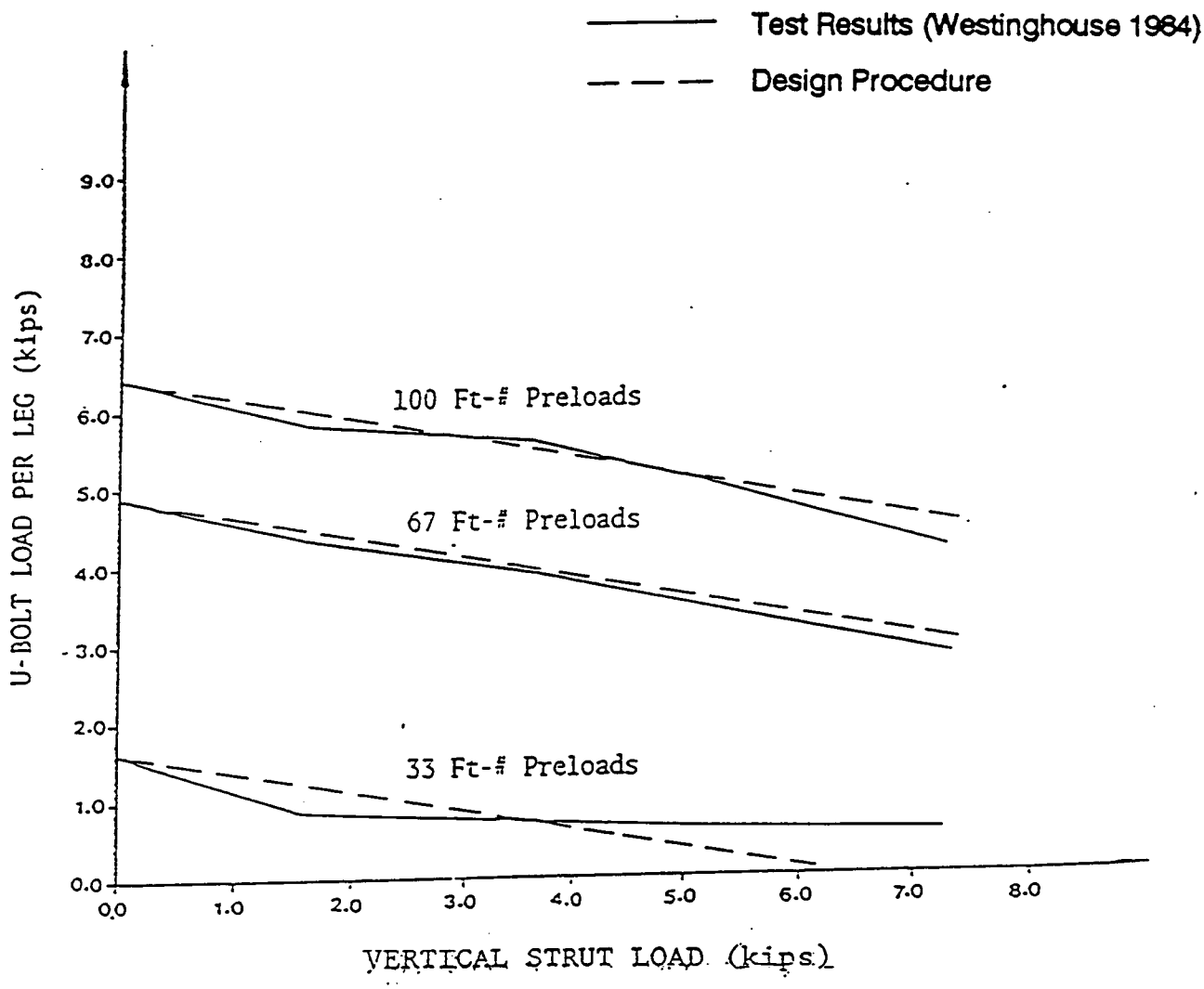

Variation in U-Bolt Tension Under

Compressive Support Load

Comparison of Tests with Design Procedure

10" Sch40 Stainless Steel

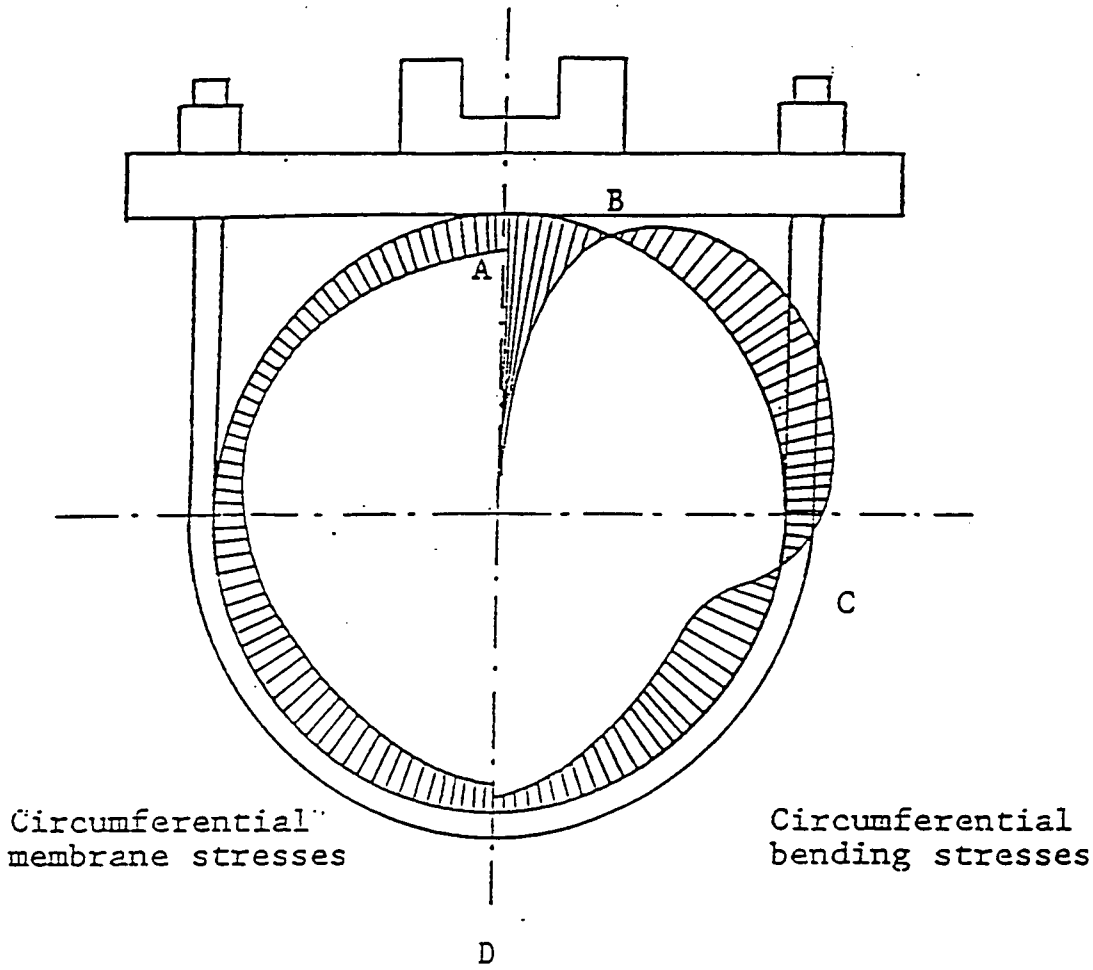

Note : Each stress category is for clarity shown in one symmetric half only

Characteristic Shape of Circumferential Bending and Membrane Stress Distributions

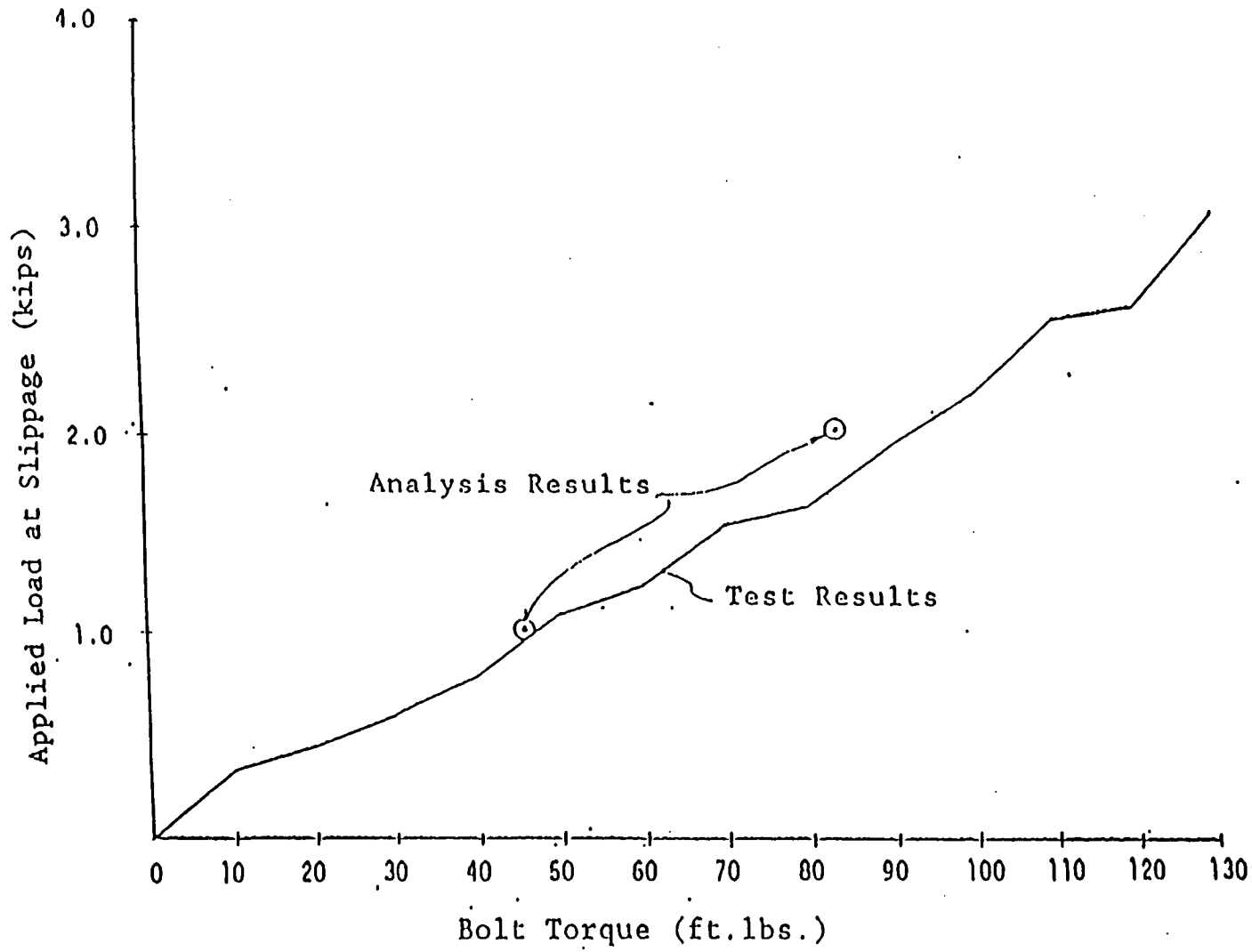

Friction Test Results for 10" Sch40 Pipe (Westinghouse 1984)

Comparison With Analytical Predictions

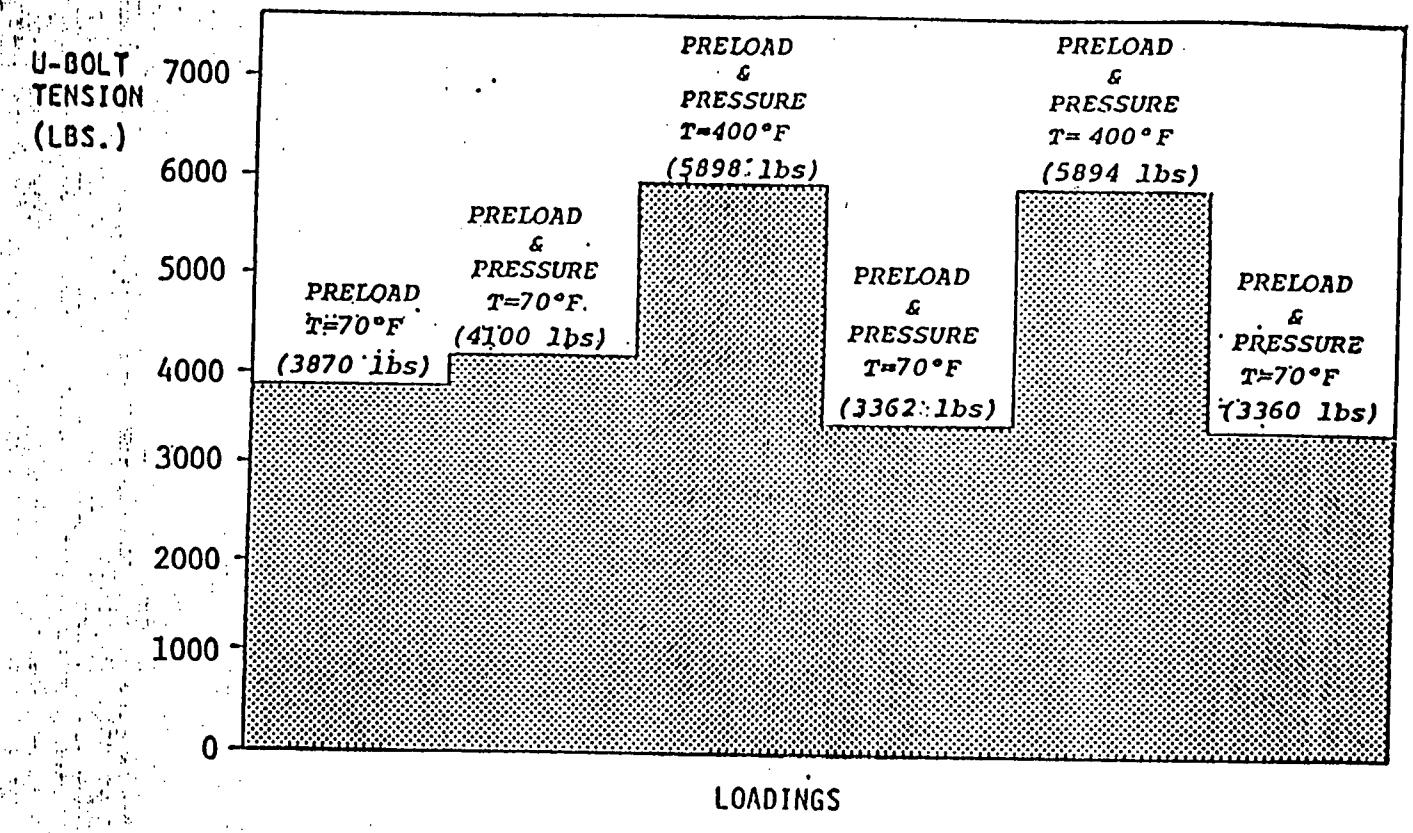

U–Bolt Tension Histogram During Thermal Cycling Analyses

Development of U-Bolt Engineering Methodology

- **Design Methodology**
  - Establish Minimum U-Bolt Preload, P^P_{min}
    - P^P_{min} = U-Bolt load such that support is stable at design strut load including effect of self-weight excitation, etc. x 1.8
  - Establish Maximum U-Bolt Preload, P^P_{max}
    - P^P_{max} = U-Bolt load equal to minimum of the design capacities of the pipe, u-bolt, and crosspiece
  - Choose Preload, P^P

$$P^P_{min} \leq P^P \leq P^P_{max}$$

  - Establish Belleville Spring Stack Characteristics

MODIFIED DESIGN OF U-BOLT ASSEMBLY

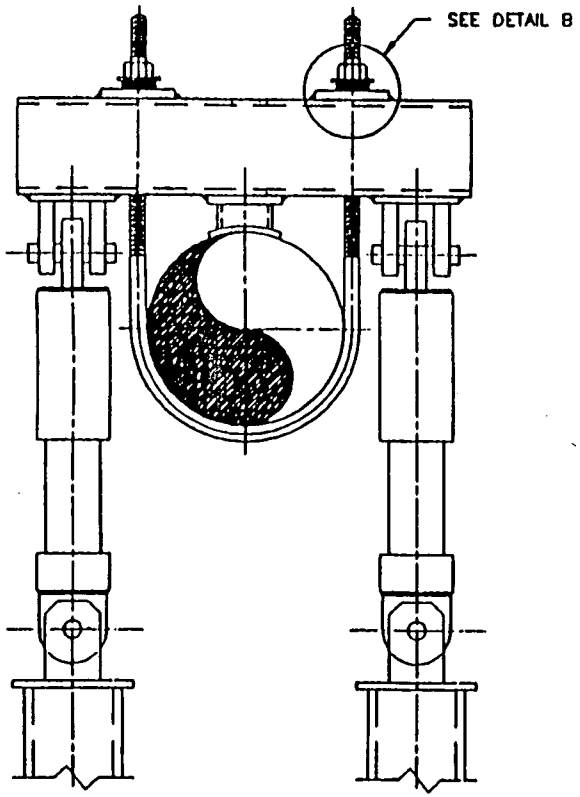

DETAIL A
(SCALE 3/4" = 1'-0")

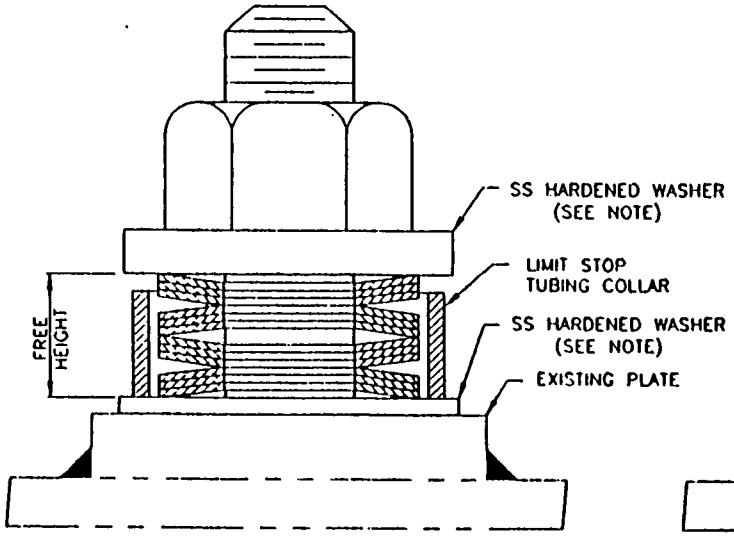

INSTALLED POSITION
PRIOR TO SPRING COMPRESSION

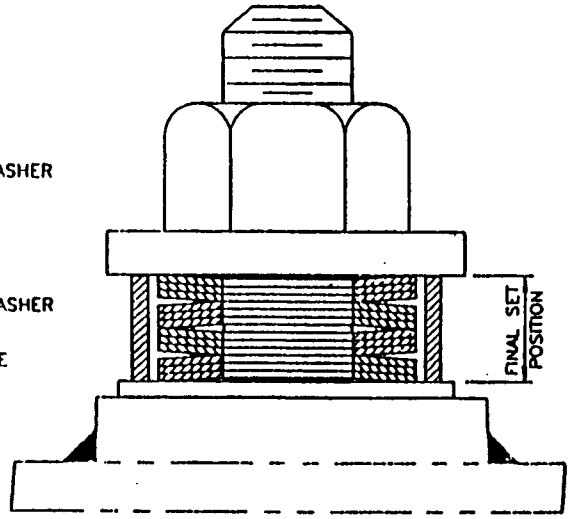

FINAL COMPRESSED POSITION

DETAIL B
(SCALE 1" = 1")

PROJECT:
TENNESSEE VALLEY AUTHORITY
WATTS BAR NUCLEAR PLANT

Design Enhancement

- **Belleville Spring Stack Between U-Bolt Nut and Cross Piece**
- **Pre-Engineered Spacer Tube Controls Compression of Belleville Spring Stack (Preload)**
- **Benefits:**
  - Accurately Controlled Preload
  - Springs Compensate for Relaxation
  - Reduced Variation in U-Bolt Tension Under Compressive Support Loads
  - Adds Conservatism
  - Reduces Load Sensitivity

U-BOLT ENGINEERING AND CONSTRUCTION PROGRAM

IMPLEMENTATION AT WBN

DESIGN

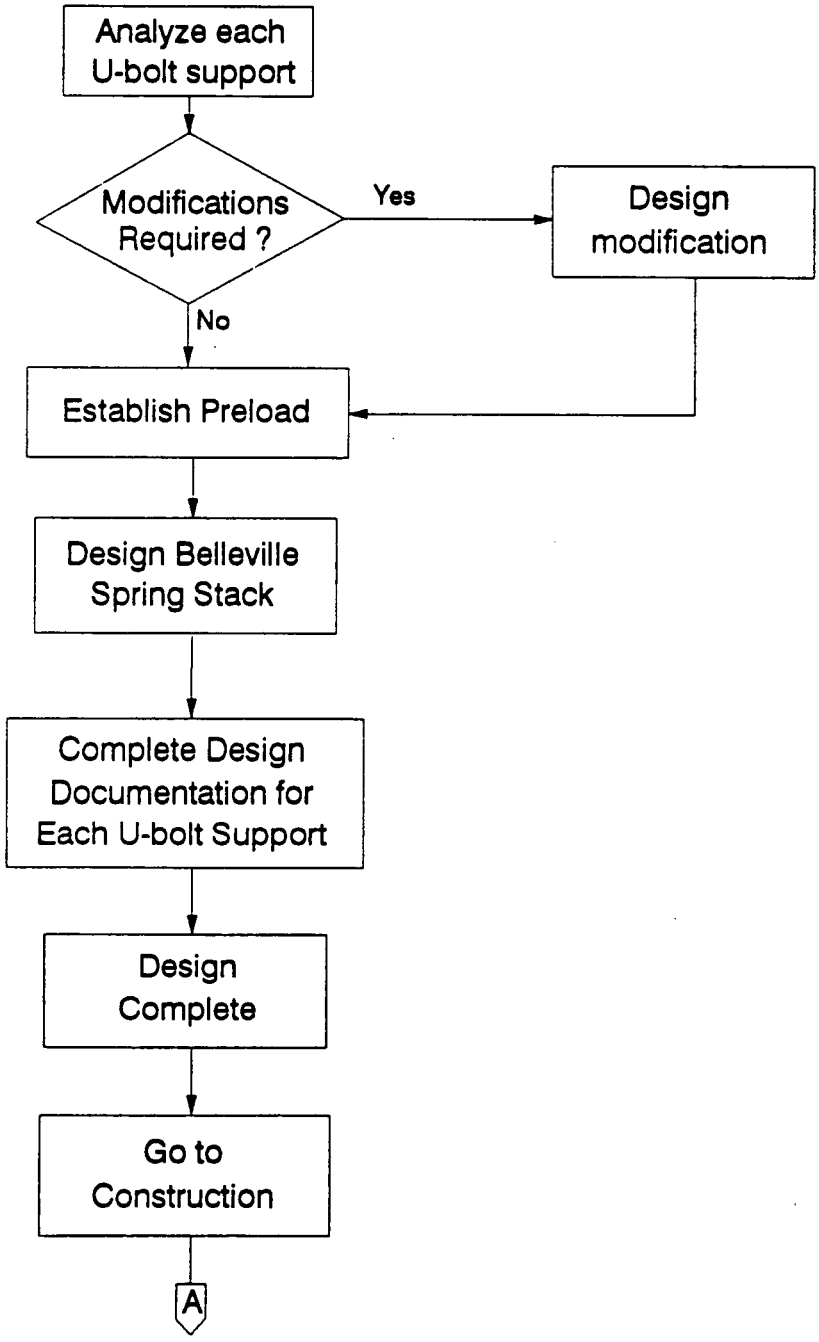

Distribution of Preload Magnitudes

Relative Location In Min-Max Range

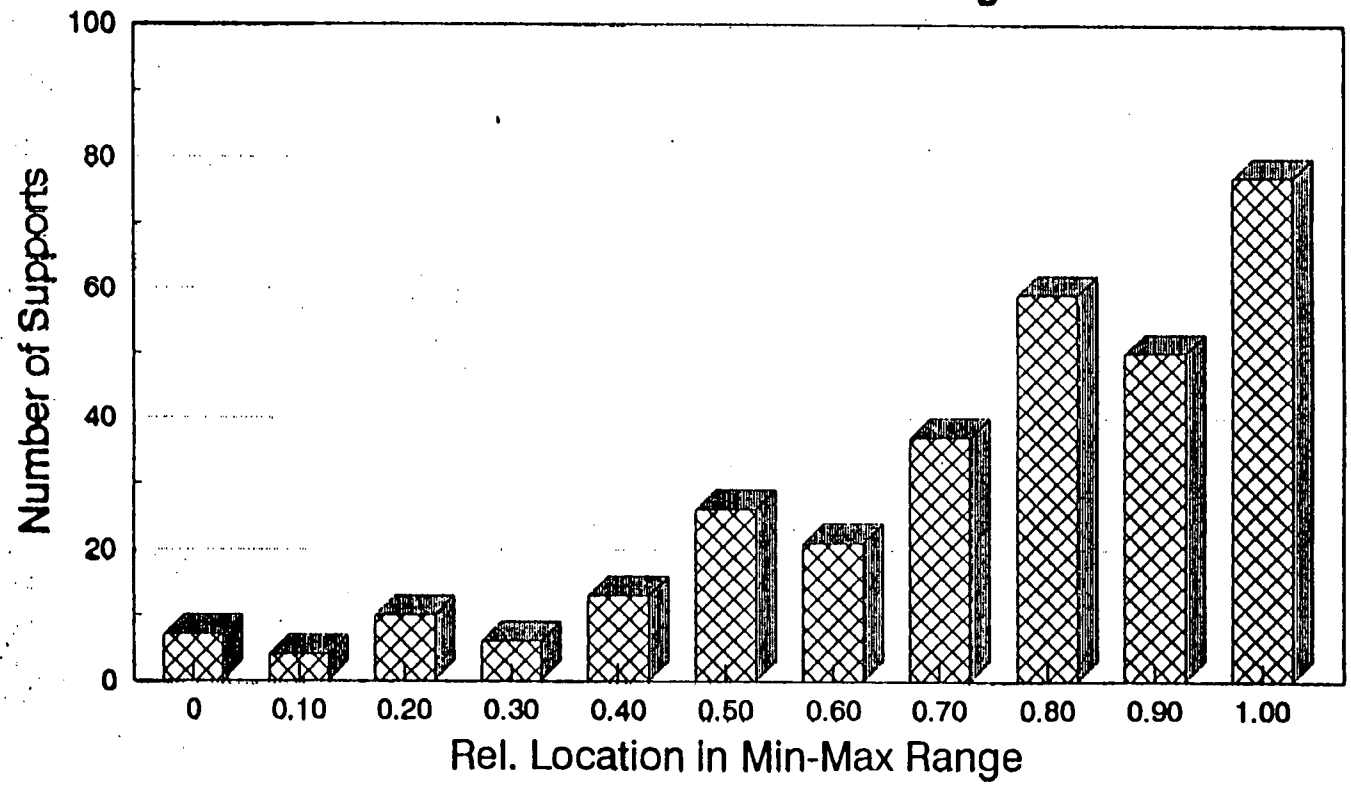

U-BOLT ENGINEERING AND CONSTRUCTION PROGRAM

IMPLEMENTATION AT WBN

CONSTRUCTION

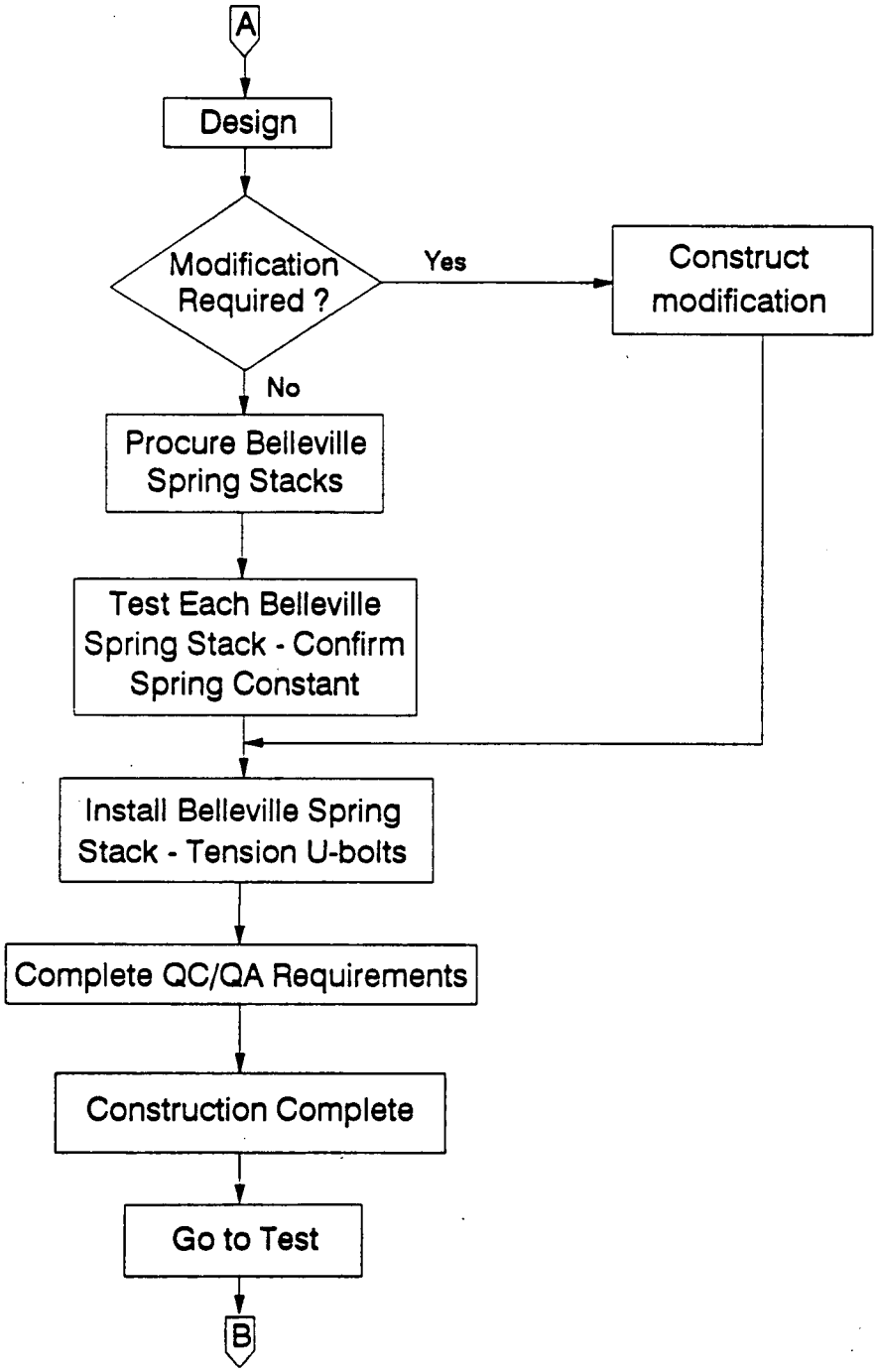

U-BOLT ENGINEERING AND CONSTRUCTION PROGRAM

IMPLEMENTATION AT WBN

TEST

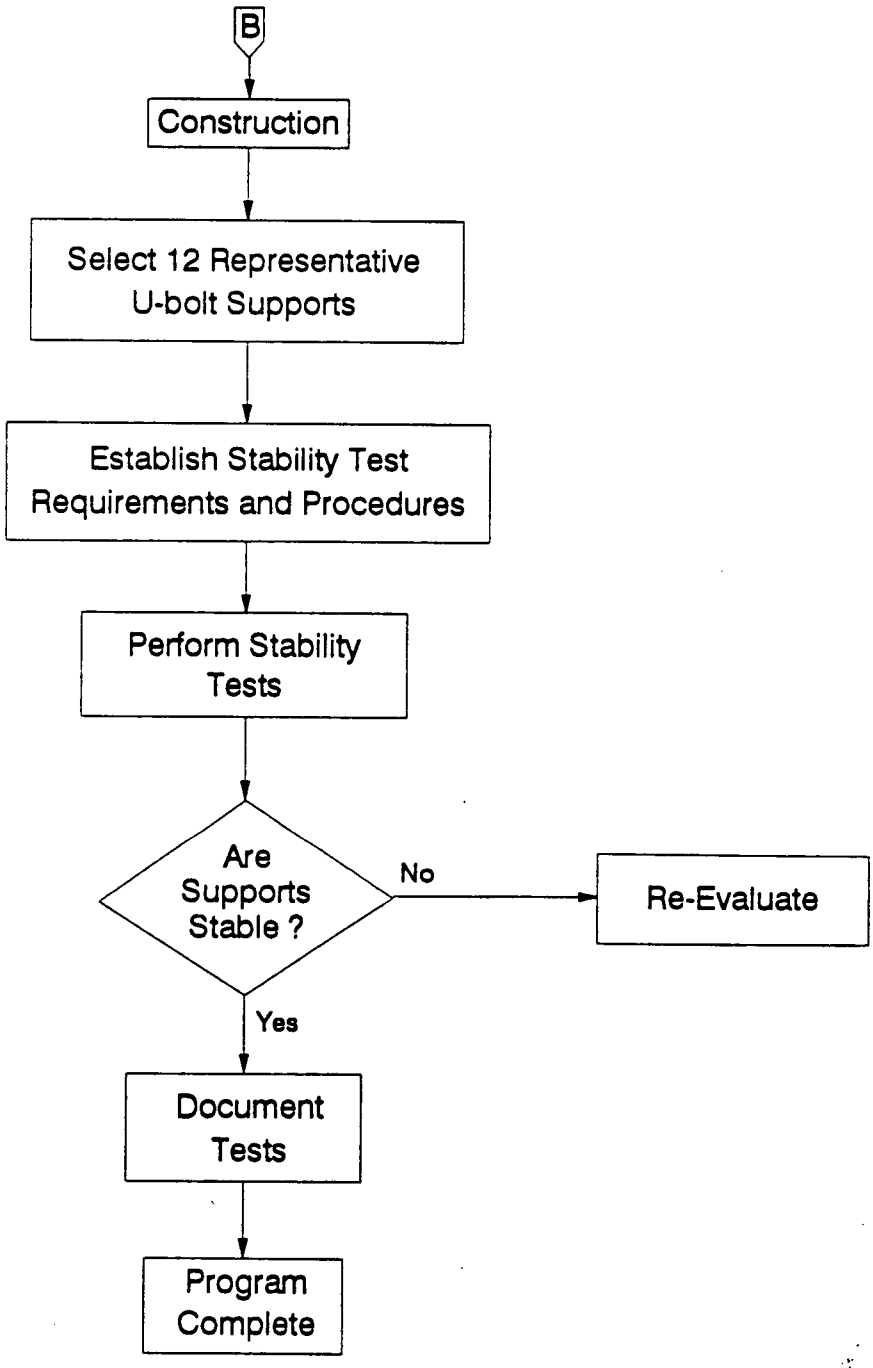

WBN In-Place Lateral Load Tests

- **Purpose: Verify that U-Bolts as Installed Provide Design Rotational Resistance**
- **Representative Sample of 12 U-Bolt Supports Tested**
- **Pipe Sizes Covered by Tests Range From 4 Inch to 36 Inch NPS**
- **Lateral Test Load:**
  - Test Load $\geq$ 1.44 x Design Pipe Support Load
- **Test Results:**
  - All U-Bolts Tested Remained Stable (No Slippage) at the Minimum Test Load
  - All U-Bolts Tested Remained Stable (No Slippage) at the Maximum Test Load

SUMMARY and CONCLUSION

- A comprehensive U-bolt engineering methodology has been developed
  - Based upon an extensive experimental program
  - Experiments were conducted to measure all significant aspects of U-bolt behavior
  - Analytical research led to methods that correctly predict U-bolt response
- A conservative design procedure was developed based on the above methodology
- A design enhancement was developed to further assue long term U-bolt stability
- Each U-bolt pipe support was individually evaluated, modified if necessary, enhanced and pre-tensioned
- Confirmation stability tests were conducted on a sample of the U-bolt supports
- The above points provide assurance that the WBN U-bolt supports will perform their intended function in any future seismic event

cc:
Mr. John B. Waters, Chairman
Tennessee Valley Authority
ET 12A
400 West Summit Hill Drive
Knoxville, Tennessee 37902

Mr. D. E. Nunn, Vice President
3B Lookout Place
1101 Market Street
Chattanooga, Tennessee 37402-2801

Mr. W. J. Museler, Vice President
Watts Bar Nuclear Plant
Tennessee Valley Authority
P.O. Box 2000
Spring City, Tennessee 37381

Mr. M. J. Burzynski, Manager
Nuclear Licensing and Regulatory Affairs
Tennessee Valley Authority
5B Lookout Place
Chattanooga, Tennessee 37402-2801

Mr. G. L. Pannell, Site Licensing Manager
Watts Bar Nuclear Plant
Tennessee Valley Authority
3B Lookout Place
Spring City, Tennessee 37381

TVA Representative
Tennessee Valley Authority
11921 Rockville Pike
Suite 402
Rockville, Maryland 20852

Mr. Michael H. Mobley, Director
Division of Radiological Health
3rd Floor, L and C Annex
401 Church Street
Nashville, Tennessee 37243-1532

General Counsel
Tennessee Valley Authority
ET 11H
400 West Summit Hill Drive
Knoxville, Tennessee 37902

The Honorable Robert Aikman
County Judge
Rhea County Courthouse
Dayton, Tennessee 37321

The Honorable Johnny Powell
County Judge
Meigs County Courthouse
Route 2
Decatur, Tennessee 37322

Regional Administrator
U.S.N.R.C. Region II
101 Marietta Street, N.W.
Suite 2900
Atlanta, Georgia 30323

Senior Resident Inspector
Watts Bar Nuclear Plant
U.S.N.R.C.
Route 2, Box 700
Spring City, Tennessee 37381

Dr. Mark O. Medford, Vice President
Nuclear Assurance, Licensing and Fuels
Tennessee Valley Authority
3B Lookout Place
1101 Market Street
Chattanooga, Tennessee 37402-2801