Tennessee Valley Authority, Post Office Box 2000, Spring City, Tennessee 37381

FEB 1 6 1999

U.S. Nuclear Regulatory Commission
ATTN: Document Control Desk
Washington, D.C. 20555

Gentlemen:

In the Matter of) Docket No. 50-390
Tennessee Valley Authority)

WATTS BAR NUCLEAR PLANT (WBN) UNIT 1 - AMERICAN SOCIETY MECHANICAL ENGINEERS (ASME) INSERVICE INSPECTION (ISI) PROGRAM REQUEST FOR RELIEF 1-ISI-4

The purpose of this letter is to request relief from an ASME Section XI Code requirement which was identified in the Unit 1 Cycle 1 refueling outage.

TVA committed in the ASME Section XI ISI Summary Report - First Refueling Cycle, dated January 16, 1998, to submit three relief requests for ISI components examined during that inspection because Code coverage could not be obtained due to physical limitations. Enclosure 1 provides one of those requests for relief concerning the seal water injection filter head-to-shell circumferential weld.

A047

Request for relief for the 1A containment spray heat exchanger nozzle-to-vessel weld and the 1B centrifugal charging pump integral attachment welds are not requested at this time. TVA has revised the ISI Program and these two components have been rescheduled for examination during a later outage. First period Code credit will not be taken for the Cycle 1 examinations which were performed on these two components.

9902250245 990216
PDR ADOCK 05000390
P PDR

FEB 1 6 1999

If you should have any questions, please contact me at (423) 365-1824.

Sincerely,

P. L. Pace
Manager, Licensing and Industry Affairs

Enclosure
cc (Enclosure):

NRC Resident Inspector
Watts Bar Nuclear Plant
1260 Nuclear Plant Road
Spring City, Tennessee 37381

Mr. Robert E. Martin, Senior Project Manager
U.S. Nuclear Regulatory Commission
One White Flint North
11555 Rockville Pike
Rockville, Maryland 20852

U.S. Nuclear Regulatory Commission
Region II
Atlanta Federal Center
61 Forsyth St., Suite 23T85
Atlanta, Georgia 30323

ENCLOSURE 1

WATTS BAR NUCLEAR PLANT (WBN) UNIT 1
ASME SECTION XI INSERVICE INSPECTION PROGRAM
REQUEST FOR RELIEF 1-ISI-4

Summary:

Due to the geometric configuration of the 1B Seal Water Injection Filter head, volumetric examination of the head-to-shell circumferential weld during the Unit 1 Cycle 1 refueling outage resulted in 80 percent of ASME code coverage being achieved. The geometric configuration of the head prevents the performance of an ultrasonic scan from the head side of the weld, thus preventing full volume examination. A supplemental surface examination was performed on the weld and was found acceptable. Volumetric examination of this component is required in accordance with ASME Section XI Table IWC-2500-1, Examination Category C-A, Item Number C1.20. The full volume weld examination requirement is defined by Figure IWC-2500-1(a).

In accordance with 10CFR50.55a(g)(5)(iii), an exemption is requested from the extent of examination requirement due to physical restrictions. This Relief Request demonstrates that the code requirement is impractical to implement.

Component:

1B Seal Water Injection Filter head-to-shell circumferential weld. Reference ISI drawing ISI-0486-C-01, weld identifier CVCS-SWIFLTR-62-96.

Code Requirement:

ASME Section XI, 1989 Edition, Table IWC-2500-1, Examination Category C-A, Item Number C1.20, examination requirement as defined by Figure IWC-2500-1(a).

Code Requirements From Which Relief Is Requested:

Relief is requested from performing the required volumetric examination on essentially 100 percent of the full volume of the seal water injection filter head-to-shell circumferential weld.

Basis for Relief:

The design configuration of the seal water injection filter precludes an ultrasonic examination of the required volume for the head-to-shell circumferential weld CVCS-SWIFLTR-62-96. The design configuration limits ultrasonic examination to approximately 80 percent of the code required examination

volume. There are two seal water injection filters, but ISI examination is required only on one for the 10 year interval.

The 1A seal water injection filter has the same configuration and examination volume coverage would be the same as identified on the 1B filter weld.

The physical examination limitations occur when the 1989 code examination requirements are applied in areas of components constructed and fabricated to early plant physical designs. WBN's ASME Section XI preservice inspection (PSI) program code of record was established in accordance with 10 CFR 50.55a(g)(2). The seal water injection filter was not within the scope of components subject to examination as established by the PSI code of record. The ASME Section XI inservice inspection (ISI) program code of record (1989 Edition) was established in accordance with 10 CFR 50.55a(g)(4). The 1989 Edition of ASME Section XI requires components within the high pressure safety injection system to be subject to examination. However, as allowed by 10 CFR 50.55a(g)(4), this component must meet the requirements of the ISI code of record "except for design and access provisions... to the extent practical within the limitations of design, geometry and materials of construction of the components."

Alternative Examination:

In lieu of the code required 100 percent full volume ultrasonic examination, an ultrasonic examination was performed on accessible areas to the extent practical given the geometric configuration of the seal water injection filter head-to-shell circumferential weld. A supplemental liquid penetrant surface examination on 100 percent of the weld length was also performed during the cycle 1 refueling outage and found acceptable. (Reference: Examination reports 331 and 333. These reports are referenced in the Cycle 1 ISI Summary Report.)

Justification For The Granting Of Relief:

The geometric configuration of the seal water injection filter head precludes ultrasonic examination of essentially 100 percent of the required examination volume. As shown on vendor drawing 5EHD-10602-004-EC32, the head is fabricated from a SA182 F304 forging. The shell is fabricated from 4-inch schedule XXSTG SA312, TP304 pipe. The geometric configuration of the head away from the weld joint prevents an ultrasonic scan from being performed from the head side of the

weld, thus precluding full volume examination. This scan is defined as "scan 3" on the ultrasonic examination report number 331.

Radiographic examination of the weld as an alternative volumetric examination method was also determined to be impractical due to the internals of the seal water injection filter. The internals are identified as the adapter assembly on the vendor drawing. The filter cartridge sets on the adapter. Without design modification, the internals of the seal water injection filter housing would prevent a meaningful radiograph.

Conformance with the referenced code requirement is impractical, therefore, this request for relief is submitted pursuant to 10CFR 50.55a(g)(5)(iii). Due to the combined effect of the high percentage of ultrasonic examination coverage (80 percent), and 100 percent surface examination coverage, it is requested that relief be approved in accordance with 10CFR 50.55a(g)(6)(i) for the first inspection interval.

Implementation Schedule:

This Request for Relief is applicable to WBN's first inspection interval.

ENCLOSURE 1

WATTS BAR NUCLEAR PLANT
ASME SECTION XI INSERVICE INSPECTION PROGRAM
REQUEST FOR RELIEF 1-ISI-4

ATTACHMENT LIST

Attachment 1. Seal Water Injection Filter ISI Drawing Number ISI-0486-C-01

Attachment 2. Vendor Drawing 5EHD-10602-004-EC62 (weld location is noted)

Attachment 3. ASME Section XI, 1989 Edition, Figure IWC-2500-1(a), Vessel Circumferential Welds, Shell-to-head circumferential weld

Attachment 4. Examination Data Reports

Report 0331, Ultrasonic Examination Report for CVCS-SWIFLTR-62-96

Report 0333, Liquid Penetrant Examination Report for CVCS-SWIFLTR-62-96

Attachment 5. TVA Procedure, Calculation of ASME Code Coverage for Section XI NDE Examinations

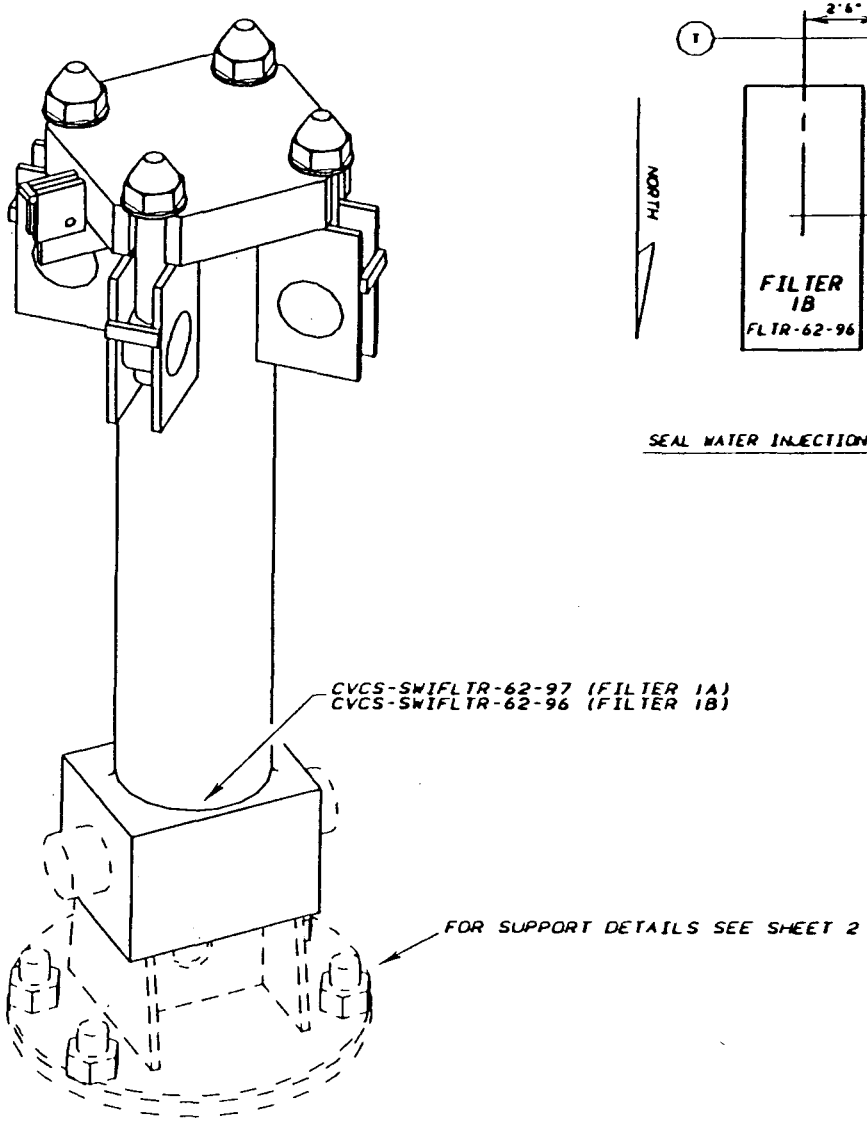

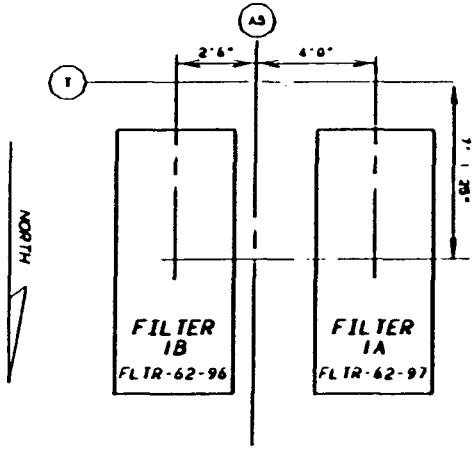

SEAL WATER INJECTION FILTER DOGHOUSE LOCATIONS

REFERENCE DRAWINGS
VENDOR TECHNICAL MANUAL
WBN-VTM-W120-1912
48N1221-7

MATERIAL SPECIFICATIONS

FILTER WALL THICKNESS
4" SCH XXSTG SA 312 TP 304
BOTTOM HEAD
FORGING

ASME CC-2 (EQUIVALENT)

NOTE THIS DRAWING MAY NOT REPRESENT THE TRUE CONFIGURATION REFER TO THE REFERENCED DRAWINGS FOR SPECIFIC DETAILS

REV	BY	CHECKED	REVIEWED	APPROVED	DATE

TENNESSEE VALLEY AUTHORITY

WATTS BAR NUCLEAR PLANT
UNIT 1
SEAL WATER INJECTION FILTER SUPPORT LOCATIONS

DRAWN PHB	DATE 2-7-96	SCALE NOT TO SCALE	
CHECKED DLB	APPROVED RGB	CAD MAINTAINED DRAWING	REV
REVIEWED REC	TSI-0486-C-01		00

ENCLOSURE 1
ATTACHMENT 1

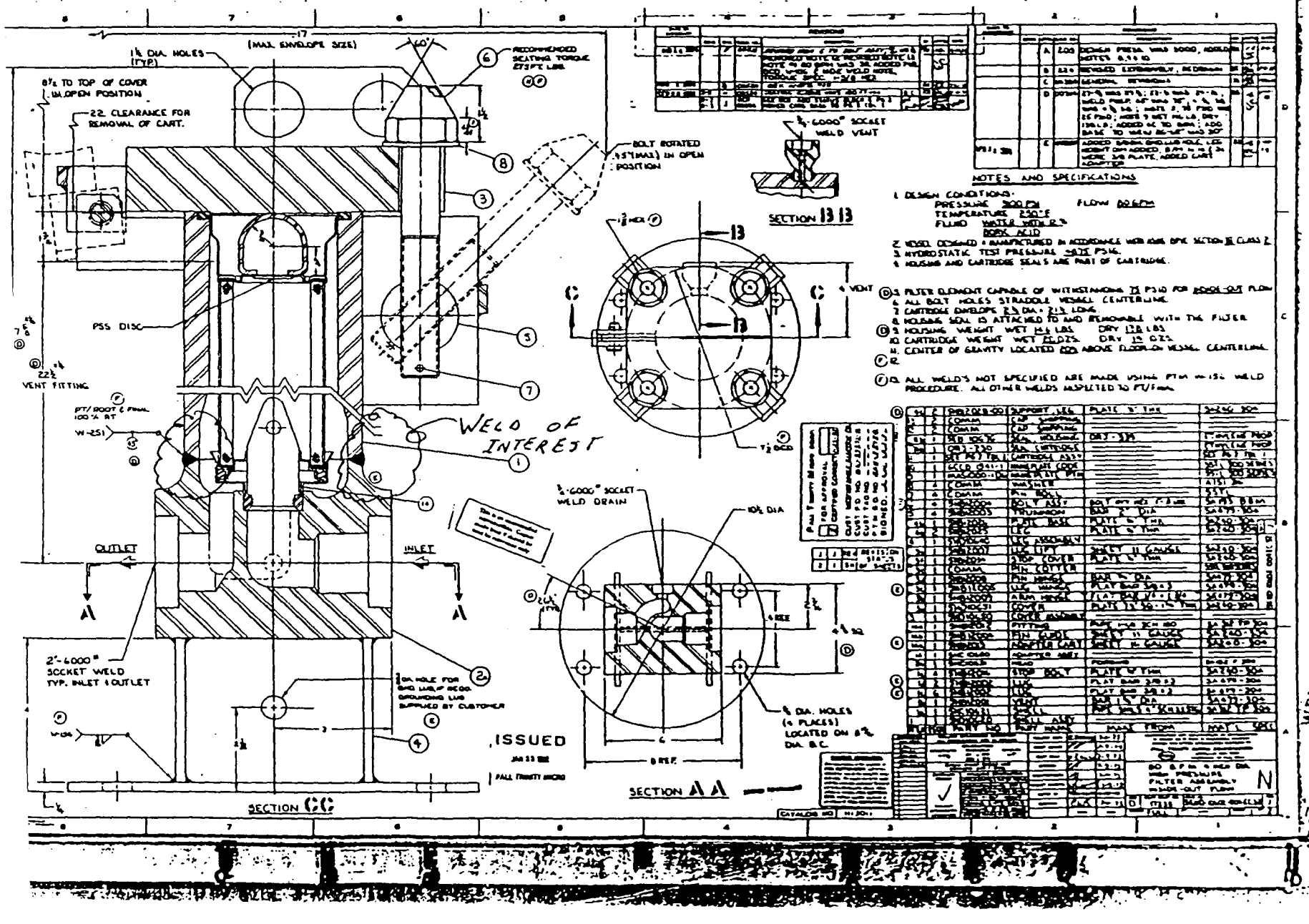

WBN REV 0
WBN PAGE 21

ENCLOSURE 1
ATTACHMENT 2

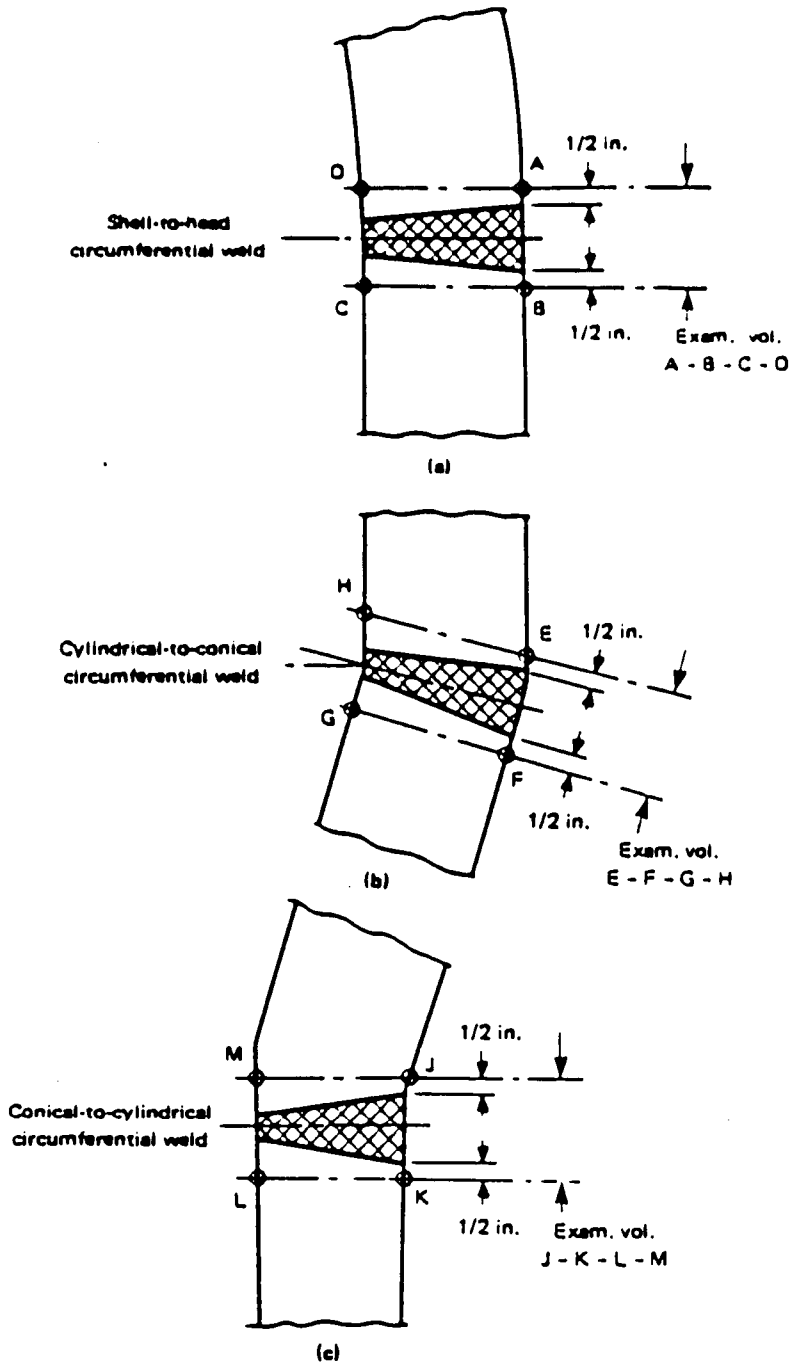

FIG. IWC-2500-1 VESSEL CIRCUMFERENTIAL WELDS

ENCLOSURE 1
ATTACHMENT 4

TENNESSEE VALLEY AUTHORITY	EXAMINATION SUMMARY AND RESOLUTION SHEET	REPORT NO. R- 0331

PROJECT: WBN UNIT: W1/C1
SYSTEM: CVCS (62)
WELD I.D.: CVCS-SWIFLTR-62-96
CONFIG: BASE TO: VESSEL
FLOW
PROCEDURE: N-UT-18 REV.: 22 TC: N/A
NDE METHOD: ☑ UT ☐ PT ☐ MT ☐ VT

EXAMINER: BEN SANDEN LV: II
EXAMINER: LV:
EXAMINER: LV:
EXAMINER: LV:
CAL SHT NO'S: N/A

THIS REPORT CONTAINS THE DATA ASSOCIATED WITH A MANUAL UT EXAM OF WELD CVCS-SWIFLTR-62-96, A 4" STAINLESS STEEL VESSEL TO BASE WELD. THE EXAM WAS PERFORMED TO SATISFY REQUIREMENTS OF ASME SEC XI.
A VEE & ONE-HALF 45° SHEAR WAVE WAS USED AND SUPPLEMENTED WITH A 60L AND 45L WAVE XDUCER.

SCAN 3 WAS NOT PERFORMED DUE TO GEOMETRICAL CONFIGURATION OF THE VESSEL BASE.
TOTAL EXAM COVERAGE CALCULATED FOR THIS WELD IS 80% CODE COVERAGE.

NO RECORDABLE INDICATIONS

REF PT EXAM REPORT # R-0333

EVALUATOR: [signature] LEVEL: II DATE: 9-19-97
CONCURRENCE: [signature] LEVEL: III DATE: 9.20-97
ANII B. Earnigh DATE: 10/7/97
PAGE 1 OF 8

TVA 19670C (NP 7/92)

TENNESSEE VALLEY AUTHORITY	USN-50 ULTRASONIC CALIBRATION DATA SHEET	CALIBRATION NO. 9-20-97 C- R : 0331

PROJECT: WBNP UNIT: 1

PROCEDURE: N-UT-18 REV.: 22 TC: N/A

INSTRUMENT: KB

MODEL/TYPE: USN-50

SERAL NUMBER: E24251

TRANSDUCER MANUF.: KB-A

SERIAL NO.: 252666

SIZE: .25" FREQUENCY: 2.25 MHz

CABLE TYPE: RG-174 LENGTH: 72 '

CALIBRATION DATE: 9-19-97

CALIBRATION BLOCK NO.: WB-13 TEMP.: 77 °F

SIMULATOR BLOCK NO.: 83-3230

THERMOMETER SERIAL NO.: 551992 DUE 3-31-98

COUPLANT: ULTRAGEL II BATCH: 94125

EXAM TYPE: ☒ SHEAR ☐ LONG. ☐ RL

ANGLE VERIFICATION

BLOCK TYPE: ROMPAS SERIAL NO. 83-3230

NOMINAL ANGLE: 45° ACTUAL ANGLE: 44°

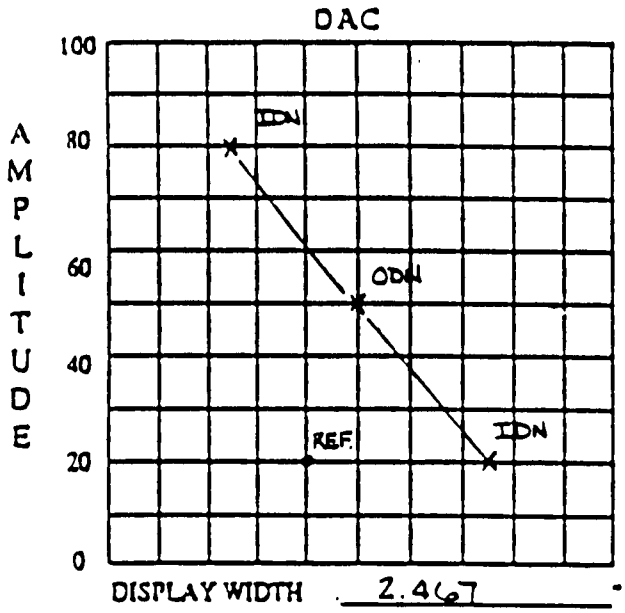

INSTRUMENT SETTINGS

REFLECTOR ORIENTATION	REFERENCE SENSITIVITY	DATA SET
AXIAL	41.0	17
CIRC	32.0	17

TOF (PEAK / FLANK): FLANK ANGLE: 44 DEG

DELAY: 3.836 uS ZERO: 3.835 uS

MATL VELOCITY: .1230 uS RANGE: 2.467

REJECT: ⊖ % PULSER: HIGH

DUAL: ☐ ON ☒ OFF

INITIAL CALIBRATION

INITIAL TIME: 1310 FINAL TIME: 1429

REF. REFLECTOR: ROMPAS GAIN: 32.0 dB

AMPLITUDE: 30 % METAL PATH: .997 '

VERIFICATION TIMES

1) 1418	2) N/A	3) N/A	4) N/A
5) N/A	6) N/A	7) N/A	8) N/A

LIN. CHECK

VERTICAL ATTENUATOR

SIGNAL 1	100	90	80	70	60	50	40	30	20	10
SIGNAL 2	50	45	40	35	30	25	20	15	10	5

GAIN	SET	-6	-12	SET	+12	SET	+6
SIGNAL AMP.	80 %	32 to 48	16 to 24	20 %	64 to 96	40 %	64 to 96
		40	20		80		80

REFER TO CALIBRATION REPORT N/A FOR PREVIOUS SATISFACTORY LINEARITY

COMMENTS: Full Volume Examination Single Sided Austenitic

WELD(s) EXAMINED: CVCS-SWIELTR-62-96

EXAMINER: Benjamin Sarah LEVEL: II

EXAMINER: N/A LEVEL: N/A

REVIEWED BY: [illegible] LEVEL: III DATE: 9-20-97

ANII: B. Earnsh

DATE: 10/2/97

TENNESSEE VALLEY AUTHORITY	USN-50 ULTRASONIC CALIBRATION DATA SHEET	CALIBRATION NO. R-0331

PROJECT: WBNP UNIT: 1

PROCEDURE: N-UT-18 REV.: 22 TC: N/A

INSTRUMENT: KB

MODEL/TYPE: USN-50

SERAL NUMBER: E24251

TRANSDUCER MANUF.: MEGASONICS

SERIAL NO.: E0431

SIZE: 2(.14"x 30°) FREQUENCY: 4.0 MHz

CABLE TYPE: RG-174 LENGTH: 72 '

CALIBRATION DATE: 9-19-97

CALIBRATION BLOCK NO.: WB-13 TEMP.: 77 °F

SIMULATOR BLOCK NO.: 83-3230

THERMOMETER SERIAL NO.: 531992 DUE 3-31-98

COUPLANT: ULTRAGEL II BATCH: 94125

EXAM TYPE: ☐ SHEAR ☐ LONG. ☒ RL

ANGLE VERIFICATION

BLOCK TYPE: ROMPAS SERIAL NO. 83-3230

NOMINAL ANGLE: 45 L ACTUAL ANGLE: 44 L

DAC

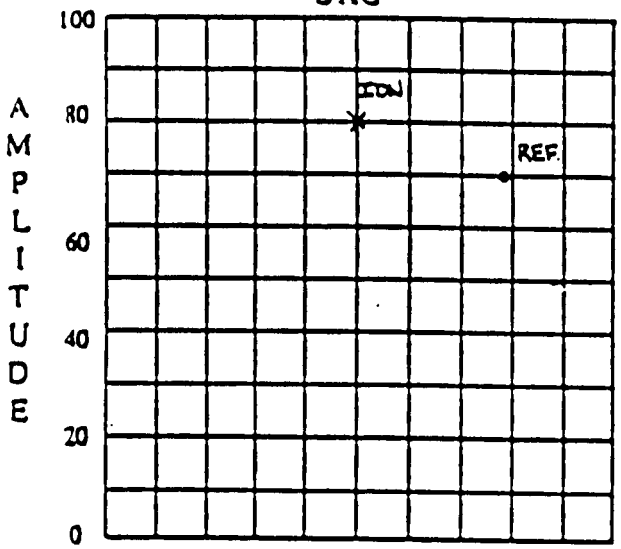

DISPLAY WIDTH 1.287 "

INSTRUMENT SETTINGS

REFLECTOR ORIENTATION	REFERENCE SENSITIVITY	DATA SET
AXIAL	54.0	18
CIRC	N/A	N/A

TOF (PEAK / FLANK): PEAK ANGLE: 44 DE

DELAY: 5.000 uS ZERO: 5.000 uS

MATL VELOCITY: .2324 uS RANGE: 1.287

REJECT: 0 % PULSER: DUAL

DUAL: ☒ ON ☐ OF

INITIAL CALIBRATION

INITIAL TIME: 1316 FINAL TIME: 1448

REF. REFLECTOR: ROMPAS GAIN: 48.0 dB

AMPLITUDE: 70 % METAL PATH: 1.028 "

VERIFICATION TIMES

1) 1437	2) N/A	3) N/A	4) N/A
5) N/A	6) N/A	7) N/A	8) N/A

LIN. CHECK

VERTICAL

SIGNAL 1	100	90	80	70	60	50	40	30	20	10
SIGNAL 2	50	45	40	35	30	25	20	15	10	5

ATTENUATOR

GAIN	SET	-6	-12	SET	+12	SET	+6
SIGNAL AMP.	80 %	32 to 48	16 to 24	20 %	64 to 96	40 %	64 to 96
		40	20		80		80

REFER TO CALIBRATION REPORT N/A FOR PREVIOUS SATISFACTORY LINEARITY

COMMENTS: Full Volume Examination Single Sided Austenitic

WELD(s) EXAMINED: CVCS-SWIFLTR-62-96

EXAMINER: Benjamin Sanders LEVEL: II

EXAMINER: N/A LEVEL: N/A

REVIEWED BY: [signature] LEVEL: III DATE: 9-20-97

ANII: B. Earnigh

DATE: 10/7/97

TENNESSEE VALLEY AUTHORITY	USN-50 ULTRASONIC CALIBRATION DATA SHEET	CALIBRATION NO. R-0331

PROJECT: WBNP UNIT: 1

PROCEDURE: N-UT-18 REV.: 22 TC: N/A

INSTRUMENT: KB

MODEL/TYPE: USN-50

SERAL NUMBER: E24251

TRANSDUCER MANUF.: MEGASONICS

SERIAL NO.: E0170

SIZE: 2(.14"x.30") FREQUENCY: 4.0 MHz

CABLE TYPE: RG-174 LENGTH: 72"

CALIBRATION DATE: 9-19-97

CALIBRATION BLOCK NO.: WB-13 TEMP.: 77 °F

SIMULATOR BLOCK NO.: 83-3230

THERMOMETER SERIAL NO.: 531992 Due 3-31-98

COUPLANT: ULTRAGEL II BATCH: 94125

EXAM TYPE: ☐ SHEAR ☐ LONG. ☒ RL

ANGLE VERIFICATION

BLOCK TYPE: ROMPAS SERIAL NO. 83-3230

NOMINAL ANGLE: 60 L ACTUAL ANGLE: 60

DAC

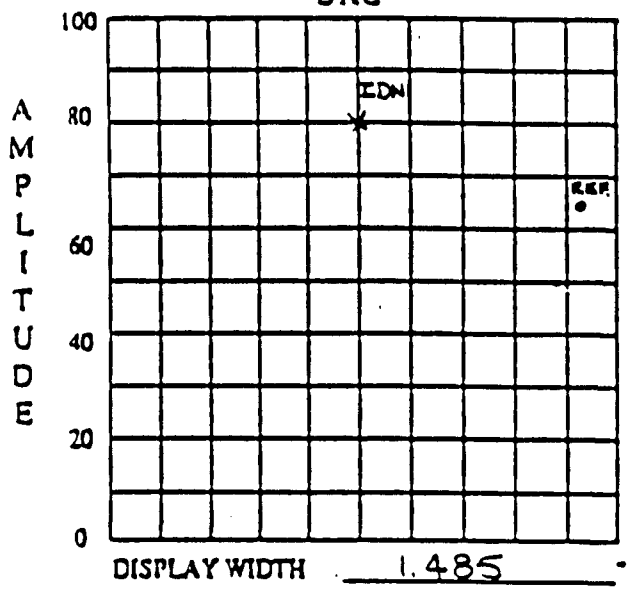

DISPLAY WIDTH 1.485"

INSTRUMENT SETTINGS

REFLECTOR ORIENTATION	REFERENCE SENSITIVITY	DATA SET
AXIAL	N/A	N/A
CIRC	62.0	19

TOF (PEAK / FLANK): PEAK ANGLE: 60 DEG

DELAY: 5.039 uS ZERO: 5.033 uS

MATL VELOCITY: .2324 uS RANGE: 1.485

REJECT: 0 % PULSER: DUAL

DUAL: ☒ ON ☐ OFF

INITIAL CALIBRATION

INITIAL TIME: 1314 FINAL TIME: 1436

REF. REFLECTOR: ROMPAS GAIN: 50.0 dB

AMPLITUDE: 65 % METAL PATH: 1.399"

VERIFICATION TIMES

1) 1430	2) 1436	3) N/A	4) N/A
5) N/A	6) N/A	7) N/A	8) N/A

LIN. CHECK

VERTICAL ATTENUATOR

SIGNAL 1	100	90	80	70	60	50	40	30	20	10
SIGNAL 2	50	45	40	35	30	25	20	15	10	5

GAIN	SET	-6	-12	SET	+12	SET	+6
SIGNAL AMP.	80 %	32 to 48	16 to 24	20 %	64 to 96	40 %	64 to 96
		40	20		80		80

REFER TO CALIBRATION REPORT N/A FOR PREVIOUS SATISFACTORY LINEARITY

COMMENTS: FULL VOLUME EXAMINATION

SINGLE SIDED AUSTENITIC

WELD(s) EXAMINED:

CVCS-SWIELTR-62-96

EXAMINER: [signature] LEVEL: II

EXAMINER: N/A LEVEL: N/A

REVIEWED BY: [signature] LEVEL: III DATE: 9-20-97

ANII: B. Eamich

DATE: 10/7/97

PAGE 4 OF 8

TENNESSEE VALLEY AUTHORITY	MANUAL ULTRASONIC PIPING EXAMINATION DATA SHEET	REPORT NO. R- 0331

PROJECT: WBNP UNIT: 1 CYCLE 1
SYSTEM: CVCS (62)
WELD I.D.: CVCS-SW1FLTR 62-69
CONFIG.: BASE TO VESSEL

→ FLOW

PROCEDURE: N-UT-18 REV.: 22 TC: N/A
Wo REFERENCE: WELD ℄
Lo REFERENCE: LADDER SIDE

EXAMINATION DATE: 9-19-97
START TIME: 1419 END TIME: 1428
EXAM SURFACE: ☐ ID ☑ OD
MATERIAL TYPE: ☐ CS ☑ SS ☐ CSCL ☐ CCSS
SURFACE TEMP: 83 °F PYRO NO.: 531992 DUE 3-31-98

CALIBRATION SHEET NO.	C. N/A	C. 1
EXAMINATION ANGLE	45 DEG.	X DEG.
CIRC. SCAN SENSITIVITY	47.0 dB	dB
AXIAL SCAN SENSITIVITY	38.0 dB	dB

IND NO.	L (in) FROM REF. L1	L Max	L2	AT MAX AMP W MAX	MP MAX	D MAX	MAX AMP % DAC	EXAM NO. 3-14	NOM. ANG.	NRI	INDICATION INFORMATION: TYPE, DAMPING, ETC.
								4	45	✓	
				N				5	45	✓	N
				A				6	45	✓	A
							N	A			

REMARKS / LIMITATIONS: SCAN 3 NOT PERFORMED DUE TO BASE GEOMETRY. AXIAL SCAN +6dB @ 5-10% BASE LINE NOISE, CIRC SCAN +6dB @ 10-15% BASELINE NOISE.

EXAMINER: Benjamin Sarten LEVEL: II
EXAMINER: N/A LEVEL: N/A
REVIEWED BY: [signature] LEVEL: III DATE: 9-20-97

ANI B. Cunningham
DATE: 10/7/97
PAGE 5 OF 8

TVA 19670 (NP 8/93)

TENNESSEE VALLEY AUTHORITY	MANUAL ULTRASONIC PIPING EXAMINATION DATA SHEET	REPORT NO. R- 0331

PROJECT: WBNP UNIT: 1 CYCLE 1
SYSTEM: CVCS (62)
WELD I.D.: CVCS-SWI FLTR 62-96
CONFIG.: BASE TO VESSEL

→ FLOW

PROCEDURE: N-UT-18 REV.: 22 TC: NONE
Wo REFERENCE: WELD ℄
Lo REFERENCE: LADDER SIDE

EXAMINATION DATE: 9-19-97
START TIME: 1431 END TIME: 1447
EXAM SURFACE: ☐ ID ☑ OD
MATERIAL TYPE: ☐ CS ☑ SS ☐ CSCL ☐ CCSS
SURFACE TEMP: 83 °F PYRO NO.: 531992 DUE 3-31-98

CALIBRATION SHEET NO.	C.	C.
EXAMINATION ANGLE	45 RL DEG.	60 RL DEG.
CIRC. SCAN SENSITIVITY	54.0 dB	N/A dB
AXIAL SCAN SENSITIVITY	N/A dB	62.0 dB

IND NO.	L (in) FROM REF. L1	L Max	L2	AT MAX AMP W MAX	MP MAX	D MAX	MAX AMP % DAC	EXAM NO. 3-14	NOM. ANG.	NRI	INDICATION INFORMATION: TYPE, DAMPING, ETC.
								5	45 RL	✓	
				N				6	45 RL	✓	N
				A				7	60 RL	✓	A
							N				
							A				

REMARKS / LIMITATIONS: 45 RL SCANNED AT REFERENCE, 20% BASE LINE NOISE.
60 RL SCANNED AT REFERENCE, 15-20% BASE LINE NOISE

EXAMINER: Benjamin Sanders LEVEL: II
EXAMINER: N/A LEVEL: N/A
REVIEWED BY: [signature] LEVEL: III DATE: 9-20-97

ANII B. Earnigh
DATE: 10/7/97
PAGE 6 OF 8

TVA 19670 (NP 8/93)

TVA	WALL THICKNESS PROFILE SHEET	REPORT NO: R-0331

PROJECT: WBNP

UNIT: 1 CYCLE 1

WELD NO: CVCS-SW1 FLTR 62-96

SYSTEM: CVCS

Record Thickness Measurements As Indicated, Including Weld Width, Edge-To-Edge At 0°

Position	0°	90°	180°	270°
1	0.65			
2	0.379		N/A	
3	0.455			
4	N/A			
5				

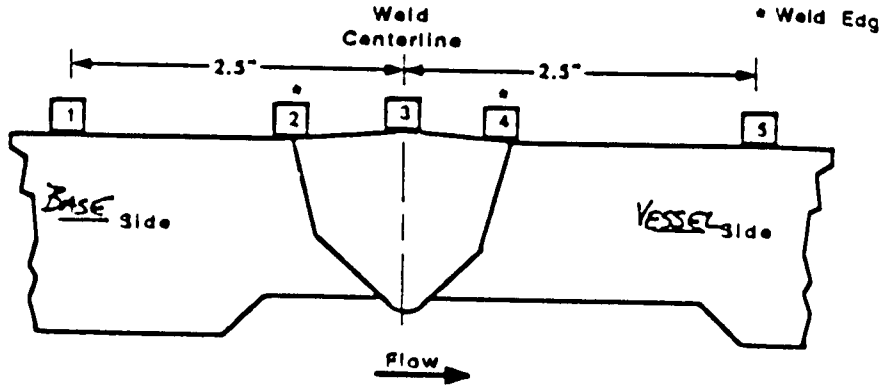

CROWN HEIGHT: FLUSH

CROWN WIDTH: 0.4"

DIAMETER: 4.0"

WELD LENGTH: 14.25"

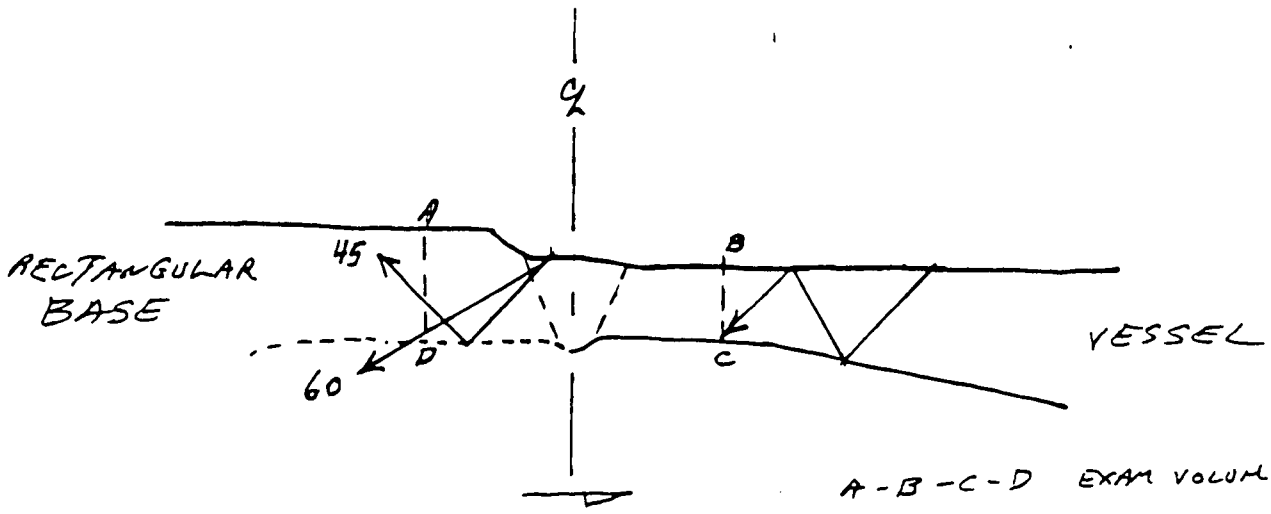

A-B-C-D EXAM VOLUME

93% BIDIRECTIONAL COVERAGE

67% CIRCUMFERENTIAL COVERAGE

80% TOTAL COVERAGE

EXAMINER: [signature]	REVIEWED BY: [signature]	ANII: B. Earnigh
LEVEL: II	LEVEL: II DATE: 9-20-97	DATE: 10/7/97
DATE: 9-19-97		PAGE 7 OF 8

TVA 19668 (NP-5-89)

TVA	WALL THICKNESS PROFILE SHEET	REPORT NO: R-0331

PROJECT: WBNP
UNIT: 1 CYCLE 1

WELD NO: CVCS-SW1FLTR 62-96
SYSTEM: CVCS

Record Thickness Measurements As Indicated, Including Weld Width, Edge-To-Edge At 0°

Position	0°	90°	180°	270°
1	0.65			
2	0.379		N/A	
3	0.455			
4	N/A			
5				

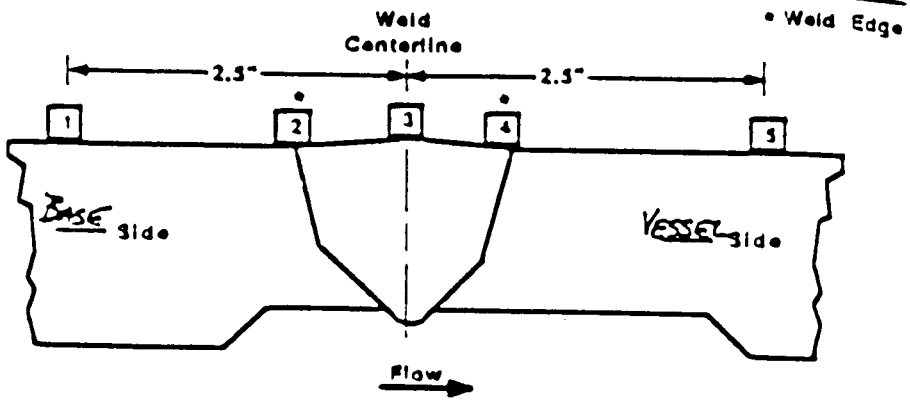

CROWN HEIGHT: FLUSH
CROWN WIDTH: 0.4"
DIAMETER: 4.0"
WELD LENGTH: 14.25"

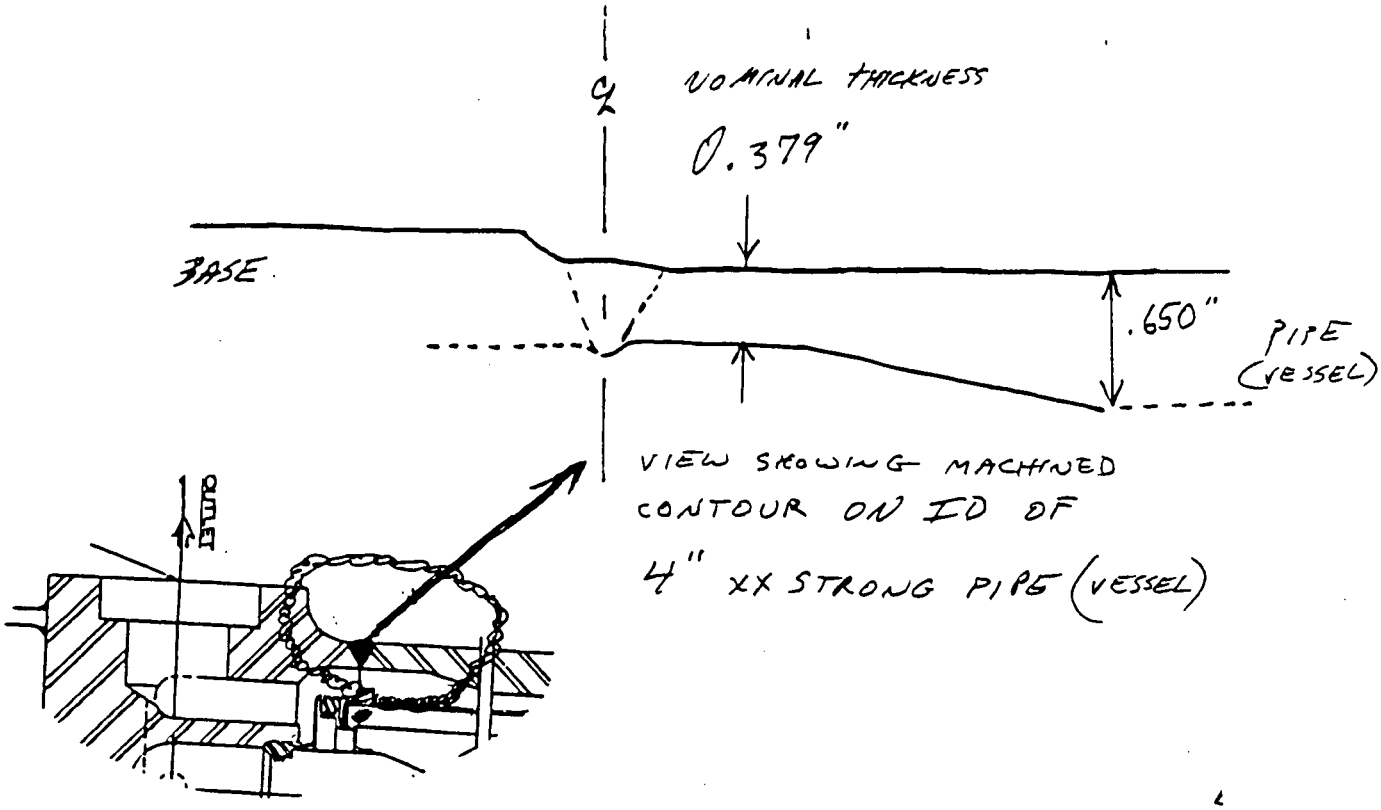

EXAMINER: [signature]	REVIEWED BY: [signature]	ANII: B. Earnigh
LEVEL: II	LEVEL: II	DATE: 10/7/97
DATE: 9-19-97	DATE: 9-20-97	PAGE 8 OF 8

REF
BOP. 107

TENNESSEE VALLEY AUTHORITY	RECORD OF LIQUID PENETRANT EXAMINATION	REPORT NO. R- 0333

PROJECT: WBN UNIT: 1/C1
SYSTEM: CVCS (62)
WELD / COMPONENT I.D.: CVCS-SWI FLTR-62-96
CONFIG.: BASO TO VESSEL
PROCEDURE: N-PT-9 REV.: 13 TC: N/A
14 9-19-97

EXAMINATION DATE: 9-19-97
START TIME: 1018 END TIME: 1118
EXAM SURFACE: ID ☐ OD ☒
ORIGINAL EXAMINATION ☒ REEXAMINATION ☐
REFERENCE DRAWING NO. ISI-0486-C-01
CODE CLASS / CATEGORY C-A

ASME SECTION I ☐
ASME SECTION III ☐
ASME SECTION VIII ☐
AWS D1.1 ☐
ASME SECTION XI PRESERVICE ☒
ANSI B31.1 ☐
ANSI B31.7 ☐
OTHER N/A ☐

ACCEPTANCE CRITERIA
N-PT-9 APPENDIX A ☐ APPENDIX B ☒
OTHER

METHOD OF EXAMINATION

METHOD

☐ WATER-WASHABLE FLUORESCENT DYE
☐ POST-EMULSIFIABLE FLUORESCENT DYE
☐ SOLVENT-REMOVABLE FLUORESCENT DYE
☐ WATER-WASHABLE VISIBLE DYE
☐ POST-EMULSIFIABLE VISIBLE DYE
☒ SOLVENT REMOVEABLE VISIBLE DYE

PENETRANT MATERIALS

BRAND NAME: MAGNAFLUX
PENETRANT TYPE: SKL-SP BATCH NO. 94M05K
REMOVER TYPE: SKC-S BATCH NO. 97E01K
DEVELOPER TYPE: SKD-S2 BATCH NO. 96J08K

BLACK LIGHT METER S/N: N/A CAL. DUE DATE: N/A

PART TEMPERATURE: 83 °F PYROMETER S/N: 552583 CAL. DATE DUE: 2-20-98
RESULTS OF EXAMINATION: SATISFACTORY ☒ UNSATISFACTORY ☐ NOI NO.: N/A
EXPLANATION OF UNSATISFACTORY RESULTS:

REMARKS / LIMITATIONS: NODE WO 97-002040-000

EXAMINER: Benjamin Smith LEVEL: II
EXAMINER: N/A LEVEL: N/A
REVIEWED BY: J. W. Woody LEVEL: III DATE: 9-20-97

ANI B. Smith
DATE: 10/2/97
PAGE 1 OF 1

TVA 7440 (NP 3/94)