403 Power Building
TENNESSEE VALLEY AUTHORITY
CHATTANOOGA, TENNESSEE 37401

AMERICAN REVOLUTION BICENTENNIAL 1776-1976

Regulatory Docket File

November 18, 1976

DOCKETED USNRC NOV 23 1976 U.S. NUCLEAR REGULATORY COMMISSION
RECEIVED NOV 23 1976 U.S. NUCLEAR REGULATORY COMMISSION Mail Section

Mr. Benard C. Rusche, Director
Office of Nuclear Reactor Regulation
U.S. Nuclear Regulatory Commission
Washington, DC 20555

Dear Mr. Rusche:

In the Matter of the Application of	)	Docket Nos. 50-390
Tennessee Valley Authority	)	50-391

The environmental review for the Watts Bar Nuclear Plant was initially conducted by TVA pursuant to a lead agency agreement with AEC. A draft environmental statement (DES) was prepared by TVA, transmitted to the Council on Environmental Quality (CEQ), and made available to the public on May 14, 1971. TVA then prepared supplements and additions to the DES which were transmitted to CEQ and made available to the public on April 7, 1972. In accordance with the lead agency agreement, TVA consulted with the AEC in the preparation of the final environmental statement (FES) and responded to all AEC concerns in the FES, which was submitted to the CEQ and made available to the public on November 9, 1972. These environmental statements evaluated the environmental impacts resulting from operation as well as construction of the Watts Bar Nuclear Plant units 1 and 2. Since that time there have been some changes in the project that relate to environmental matters addressed in the FES.

As indicated in a letter to you from J. E. Gilleland dated April 9, 1976, TVA has conducted a reassessment of environmental aspects of the Watts Bar project, and we are now informing you of the results of this review. In addition, we are providing updated information concerning certain biological monitoring data acquired since the FES was issued. Also included are updated versions to parts of two subsections of the Watts Bar Nuclear Plant FES. This should facilitate your staff's review of those discussions.

Information previously submitted to NRC includes the Watts Bar Nuclear Plant Final Safety Analysis Report (FSAR), which was transmitted by letter dated June 30, 1976, from T. Graham Wells, Jr., to Benard C. Rusche, and the material requested regarding the compliance of Watts Bar Nuclear Plant with 10 CFR Part 50, Appendix I, which was transmitted by letter dated September 20, 1976, from J. E. Gilleland to Voss A. Moore. Chapter 16, Appendix A of the FSAR proposes environmental technical specifications for the Watts Bar Nuclear Plant which include an environmental

11935

Mr. Benard C. Rusche November 18, 1976

monitoring program to become effective once the plant is operational. At the same time, the Environmental Protection Agency's (EPA's) jurisdiction over water quality matters under the Federal Water Pollution Control Act (FWPCA), as amended (1972), is recognized. The Appendix I submittals are specifically responsive to NRC's review relating to extensive radiological dose assessments, detailed meteorological data with associated dispersion calculations, and an in-depth benefit/cost analysis of plant radiological effluent treatment alternatives in a manner consistent with NRC's recommended models and methods of analysis for demonstrating compliance with the "as low as is reasonably achievable" criterion.

TVA's review of the above matters indicates that the overall environmental impact of the changes to the Watts Bar project (since the FES was published) would be less than those discussed in the FES, and that the FES is still valid in all other respects. In addition, no impacts significantly different from those addressed in the FES are expected to result from any particular change identified in this submittal.

Based on our review, TVA has determined that no supplement to the Watts Bar Nuclear Plant FES is necessary. Furthermore, the FES and information discussed in this submittal fully assess the environmental impacts of operation of the Watts Bar Nuclear Plant.

Very truly yours,

TENNESSEE VALLEY AUTHORITY

H. G. Parris

H. G. Parris
Director of Power Resource Planning

Subscribed and sworn to before me this 18th day of Nov 1976

Susan Renner
Notary Public

My Commission Expires 10/10/78

Enclosures (41)

TENNESSEE VALLEY AUTHORITY

ENVIRONMENTAL INFORMATION

— NOTICE —

THE ATTACHED FILES ARE OFFICIAL RECORDS OF THE DIVISION OF DOCUMENT CONTROL. THEY HAVE BEEN CHARGED TO YOU FOR A LIMITED TIME PERIOD AND MUST BE RETURNED TO THE RECORDS FACILITY BRANCH 016. PLEASE DO NOT SEND DOCUMENTS CHARGED OUT THROUGH THE MAIL. REMOVAL OF ANY PAGE(S) FROM DOCUMENT FOR REPRODUCTION MUST BE REFERRED TO FILE PERSONNEL.

DEADLINE RETURN DATE _____

_____ _____

_____ _____

_____ _____

RECORDS FACILITY BRANCH

Docket # 50-390/391
Control # 11935
Date 11-18-76 of Document:
REGULATORY DOCKET FILE

WATTS BAR NUCLEAR PLANT UNITS 1 AND 2

TENNESSEE VALLEY AUTHORITY

ENVIRONMENTAL INFORMATION
WATTS BAR NUCLEAR PLANT
UNITS 1 AND 2

NOV 18 1976

TABLE OF CONTENTS

	Page
SECTION A	A-1
Watts Bar/Volunteer 500 kV Transmission Line	A-2
Location of Blowdown Diffusers	A-4
Tritium Disposal Method	A-21
Water Chemistry Changes	A-23
Minor Changes in Construction Practices	A-28
Visitor Facilities	A-31
Addition of Condensate Demineralizers	A-32
Addition of Radwaste Evaporator	A-37
Other changes, Miscellaneous Items	A-38
SECTION B	B-1
Updated subsection 1.1	B-3
Updated subsection 2.5	B-28
SECTION C	C-1
Aquatic Biota (Nonfish) Data Summary	C-1
Biological Environmental Review	C-3
Summary of Water Quality and Aquatic (Nonfish) Monitoring Programs	C-89

SECTION A

This section identifies and discusses environmental aspects of those features relating to the design, construction, and operation of the Watts Bar Nuclear Plant which have been revised since the FES was published on November 9, 1972. There are nine general items discussed in this section. These are: (1) Watts Bar/Volunteer 500kV Transmission Line, (2) Location of blowdown diffusers, (3) Tritium disposal method, (4) water chemistry changes, (5) minor changes in construction practices, (6) visitor facilities, (7) addition of condensate demineralizers, (8) addition of radwaste evaporator and (9) other changes, miscellaneous items.

RELOCATION OF WATTS BAR/VOLUNTEER
500-kV TRANSMISSION LINE

A relocation of the Watts Bar/Volunteer 500-kV transmission line became necessary because of the selection of a more desirable substation location for the tie-in of this line. An assessment of the transmission line along this relocated route has been conducted by TVA. This assessment has been included in the Volunteer, Tennessee, 500-kV Substation And Transmission Connections Final Environmental Statsment that was sent to the Council on Environmental Quality and made available to the public on July 6, 1976. This statement concluded that the environmental impacts due to the transmission line at the new location would be similar in nature to the environmental impacts of the previous location but markedly reduced, especially with regard to acquisition of new acreage of right of way and clearing of woodlands, due to use of existing right of way.

During development of the proposed transmission line route, preplanning discussions were held with the following Federal, state, and local commissions, departments and planning agencies:

Knoxville-Knox County Metropolitan Planning Commission, Knoxville
East Tennessee Development District, Knoxville
Southeast Development District, Chattanooga
Tennessee State Planning Office, East Tennessee Section, Knoxville
Meigs County Planning Commission, Decatur
Loudon County Regional Planning Commission, Loudon
McMinn County Planning Commission, Athens
Roane County Planning Commission, Rockwood
Anderson County Planning Commission, Clinton
State of Tennessee Wildlife Resources Agency, Nashville
Tennessee Department of Transportation, Nashville
U.S. Department of Agriculture, Soil Conservation Service, Nashville
Tennessee Department of Conservation, Nashville

Through the early disclosure of TVA's plans, potential conflicts with other agency programs or interests have been factored into the decision-making process. No major conflicts or environmental impacts were identified which may accrue to this action that cannot be reasonably controlled or avoided.

RELOCATION OF BLOWDOWN DIFFUSERS

The TVA Watts Bar Nuclear Plant FES stated that blowdown from the cooling towers would be discharged by means of blowdown diffusers located in the Chickamauga Reservoir. The environmental assessment of this action was based on placement of the blowdown diffuser at about Tennessee River Mile (TRM) 527.6. This location has been determined to be infeasible due to insufficient river depths in that area. As a result, TVA has found it necessary to relocate the blowdown diffusers to an area approximately 1,000 feet upstream of the originally proposed location. Both locations are within an area designated by the State of Tennessee as a mussel sanctuary.

In choosing the location discussed above, TVA has conducted an environmental review of this action. The environmental review considered three reasonable alternatives. These alternatives consisted of (1) relocation of the diffuser system to an area of adequate depth for barge clearance approximately 1,000 feet upstream from the originally proposed area, (2) locating the diffusers as planned and realigning a total of about one mile of the present navigation channel in the Tennessee River (upstream and downstream) approximately 250 feet toward the left bank, away from the diffuser location, and (3) redesign and relocation of the diffusers to an area between the right bank and the navigation channel with the diffusers oriented parallel to the river flow.

Alternative 1 would have essentially the same environmental impact as that outlined for the original diffuser location outlined in the Watts Bar Nuclear Plant FES. TVA estimates that about 1,600 yd^3 of material would

have to be removed, resulting in 0.3 acre of river bottom being disturbed. Owing to the nature of the substrate, the impact of this action on the mussel sanctuary below Watts Bar Dam is expected to be negligible. Alternative 2 is expected to result in the greatest environmental impact of all three alternatives since dredging work would be performed in areas designated as a mussel sanctuary by the State of Tennessee, as well as requiring a 1-mile realignment of the present river navigation channel. Alternative 3 would result in greater potential for environmental impacts on aquatic and terrestrial biota than Alternative 1 due to the requirement of a longer diffuser pipe system and also the effluent plume being closer to the right bank. Construction impacts for alternatives 1 and 3 would be expected to be nearly the same. Although the capital cost estimates favor alternative 3, the fact that the diffuser is oriented perpendicular to the river flow and consequently would provide more rapid dilution of thermal, radioactive and nonradioactive discharges weighs heavily in favor of alternative 1. TVA has conducted a review of these alternatives and determined that alternative 1 is the preferred selection with respect to feasibility, environmental impacts, and associated capital costs. See Figures 1, 2, and 3 for a detailed layout of the blowdown diffuser system chosen under alternative 1. A fourth figure shows bottom contours of the Tennessee River in the vicinity of river mile 527.7R. The streambed between the original diffuser location and the location of alternative 1 is mostly bedrock. Implementation of alternative 1 should result in minimal environment impacts to the overall aquatic ecosystem, and afford the greatest protection to the State of Tennessee mussel sanctuary below Watts Bar Dam.

TVA has notified both the State of Tennessee and the U.S. Army Corps of Engineers (since their comments had expressed concern over the mussel sanctuary described in the Watts Bar Nuclear Plant Draft Environmental Statement) of the plans to relocate the discharge diffuser. Their responses as well as other referenced correspondence are included at the end of this discussion (following the four figures in the order they are cited).

The State of Tennessee indicated that their concurrence with alternative 1 was contingent upon disposal of spoil onshore and not back into the Tennessee River. TVA plans to use dredging equipment to remove the estimated quantity of 1,600 cubic yards of spoil material to an onshore location that will be properly diked to avoid excessive runoff. By letter dated May 14, 1976, TVA responded to the State of Tennessee's request for additional information concerning mussel beds between the original diffuser site and Watts Bar Dam (included at end of this discussion). As stated in this letter, TVA does not consider any of the mussel species found in the area of the Tennessee River below Watts Bar Dam to be endangered or threatened. However, one mussel species (Lampsilis orbiculata) found in the mussel bed from Tennessee River miles 527.6 to 528.5 has recently been determined by the U.S. Department of the Interior (Fish and Wildlife Service) to be an endangered species, pursuant to Section 4 of the Endangered Species Act of 1973 (see Federal Register, Vol. 41, No. 115-Monday, June 14, 1976, pages 24062-24067). This mussel bed is situated on the left side of the river navigation channel while the proposed discharge diffuser location at about TRM 527.7 is on the opposite side of the channel, along with the Watts Bar Nuclear Plant.

Since the nearest mussel bed is located across the river and almost entirely upstream of the proposed discharge diffuser location and relatively high river velocities exist in this area, TVA believes that construction of the discharge diffuser as proposed would not result in any adverse impact (e.g., turbidity of the river) on the mussel species Lampsilis orbiculata. In the event of low flow river conditions during construction of the diffuser, the minor sedimentation expected would be even more localized on the right side of the river, downstream and across the river from the nearest mussel concentration. Thermal and chemical discharges through the diffuser during operation of the plant are also not expected to have any adverse impact on this mussel species since the thermal discharge plume and mixing zone (both thermal and chemical) would always be well downstream of the discharge diffuser location except during periods of low flow in the vicinity of Watts Bar Dam. As stated in the discussion on "Cooling Tower Blowdown Holdup Modification," discharges of cooling tower blowdown through the diffuser system will be discontinued during periods that releases from Watts Bar Dam are less than 3,500 cfs. This provides reasonable assurance that no adverse impacts to Lampsilis orbiculata would result from plant operation during low flow conditions. Further protection from plant discharges is afforded to Lampsilis orbiculata (as well as to the overall aquatic ecosystem in the area of the discharge diffusers) since TVA will be required to operate Watts Bar Nuclear Plant in accordance with the terms of both the facility NPDES permit for thermal and nonradioactive chemical discharges, and 10 CFR 50, Appendix I for radioactive materials discharged through the diffusers.

The U.S. Army Corps of Engineers also expressed concern over possible impacts on the mussel populations of the area. They stated that use of silt screens for controlling sedimentation and concomitant high turbidity had proven useful for certain slack water situations. TVA is committed to developing a course of action that will protect the mussel sanctuary located in the area of the diffuser pipes and has considered the use of silt screens for siltation control during dredging of the overburden material. The high velocity of the Tennessee River in this area would offset any advantage regarding siltation control that might be gained by use of silt screens. In discussions on this matter, the U.S. Army Corps of Engineers has agreed with our evaluation. As suggested by the U.S. Army Corps of Engineers, construction activities related to this action will be carried out under TVA's supervision. Dredging activities for the Watts Bar Nuclear Plant discharge diffuser system are now scheduled to begin in early December 1976.

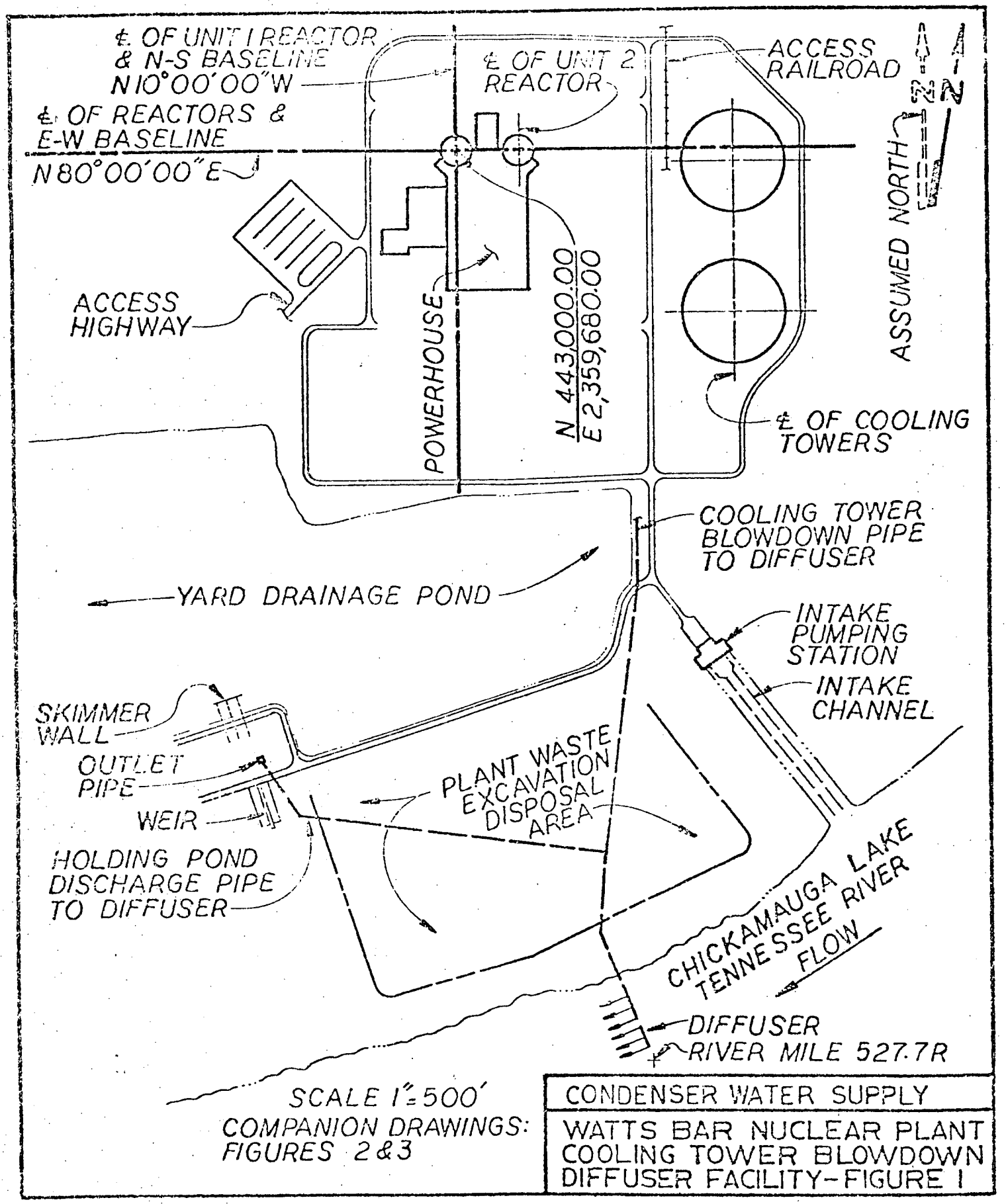
℄ OF UNIT 1 REACTOR
& N-S BASELINE
N10°00'00"W
℄ OF UNIT 2
REACTOR
ACCESS
RAILROAD
℄ OF REACTORS &
E-W BASELINE
N80°00'00"E
ASSUMED NORTH
ACCESS
HIGHWAY
POWERHOUSE
N 443,000.00
E 2,359,680.00
℄ OF COOLING
TOWERS
COOLING TOWER
BLOWDOWN PIPE
TO DIFFUSER
YARD DRAINAGE POND
INTAKE
PUMPING
STATION
INTAKE
CHANNEL
SKIMMER
WALL
OUTLET
PIPE
WEIR
PLANT WASTE
EXCAVATION
DISPOSAL
AREA
HOLDING POND
DISCHARGE PIPE
TO DIFFUSER
CHICKAMAUGA LAKE
TENNESSEE RIVER
FLOW
DIFFUSER
RIVER MILE 527.7R
SCALE 1"=500'
COMPANION DRAWINGS:
FIGURES 2 & 3
CONDENSER WATER SUPPLY
WATTS BAR NUCLEAR PLANT
COOLING TOWER BLOWDOWN
DIFFUSER FACILITY-FIGURE 1

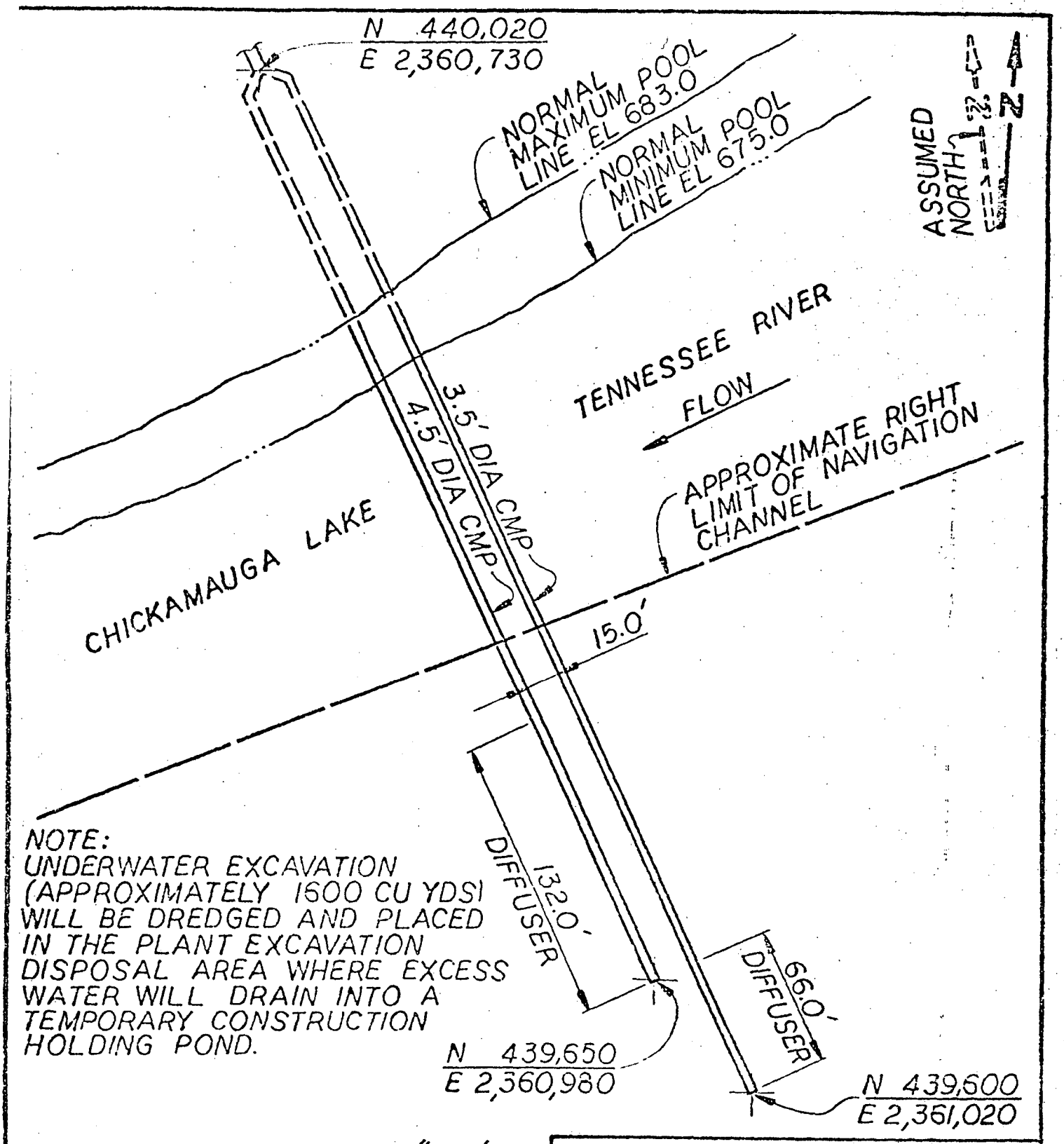

NOTE:
UNDERWATER EXCAVATION (APPROXIMATELY 1600 CU YDS) WILL BE DREDGED AND PLACED IN THE PLANT EXCAVATION DISPOSAL AREA WHERE EXCESS WATER WILL DRAIN INTO A TEMPORARY CONSTRUCTION HOLDING POND.

SCALE 1" = 60'
COMPANION DRAWINGS: FIGURES 1 & 3

CONDENSER WATER SUPPLY

WATTS BAR NUCLEAR PLANT
COOLING TOWER BLOWDOWN
DIFFUSER FACILITY—FIGURE 2

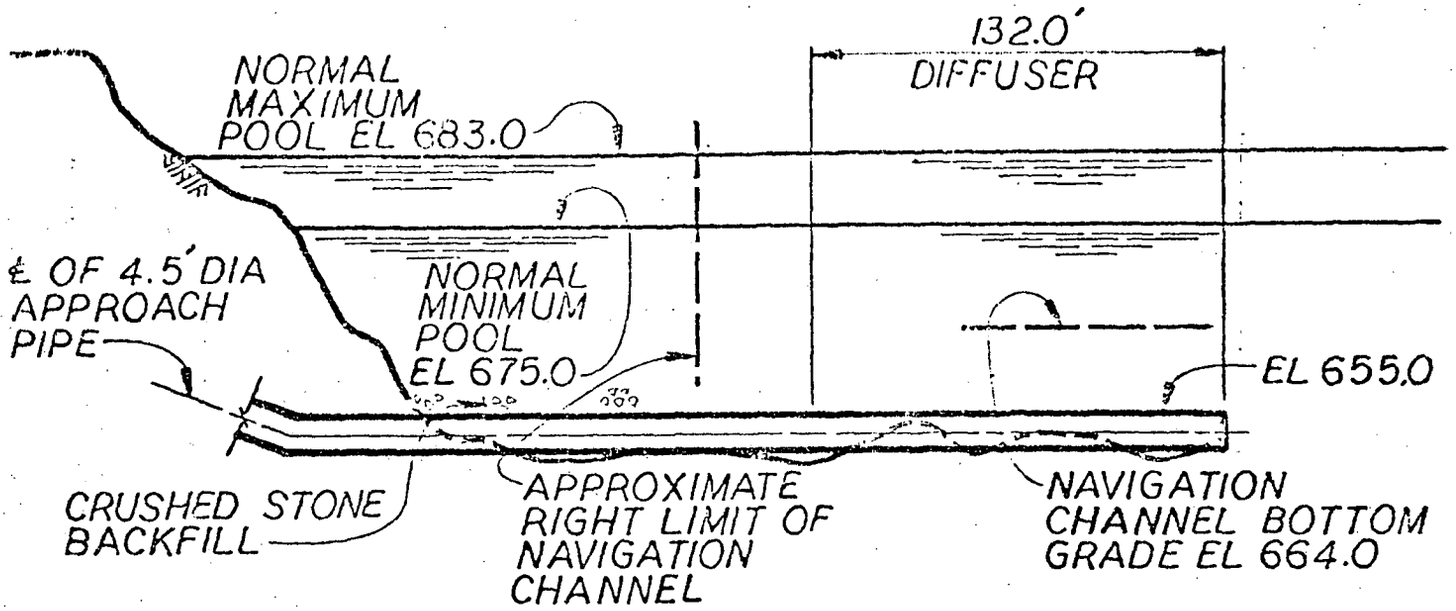

SECTION THRU 4.5' DIA CMP PIPE

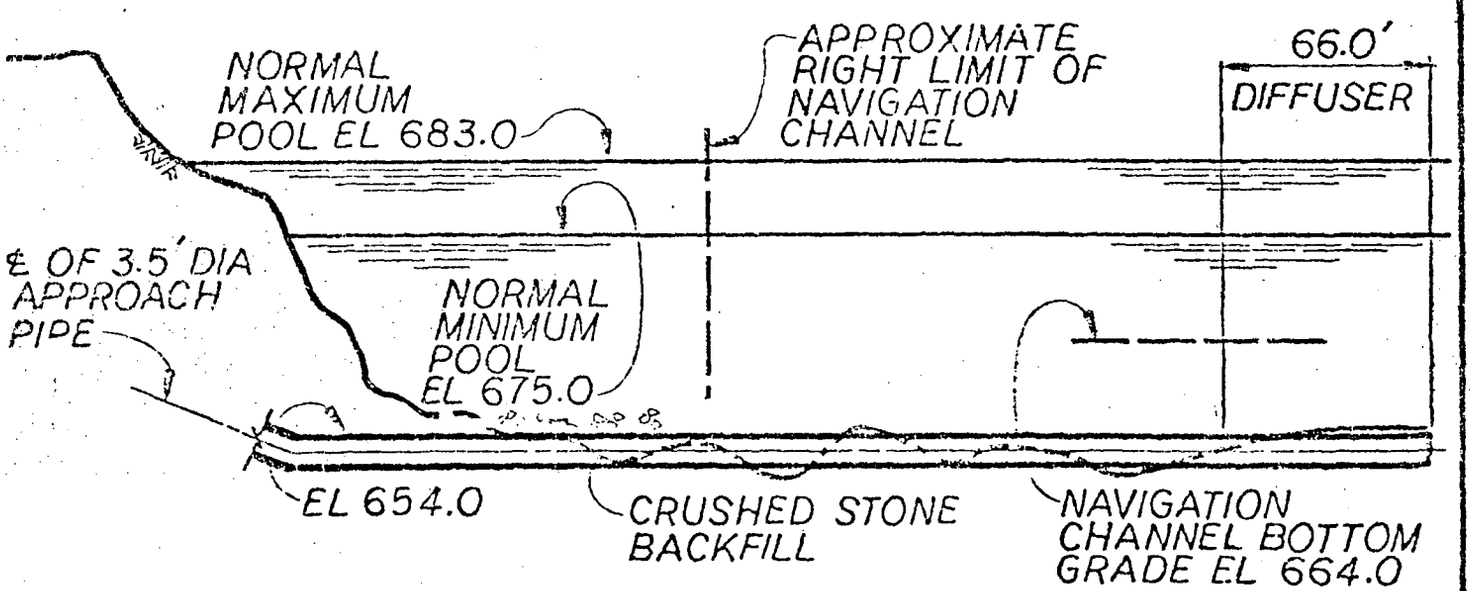

SECTION THRU 3.5' DIA CMP PIPE

SCALE: HORIZONTAL 1" = 60'
VERTICAL 1" = 20'
COMPANION DRAWINGS:
FIGURES 1 & 2

CONDENSER WATER SUPPLY
WATTS BAR NUCLEAR PLANT COOLING TOWER BLOWDOWN DIFFUSER FACILITY—FIGURE 3

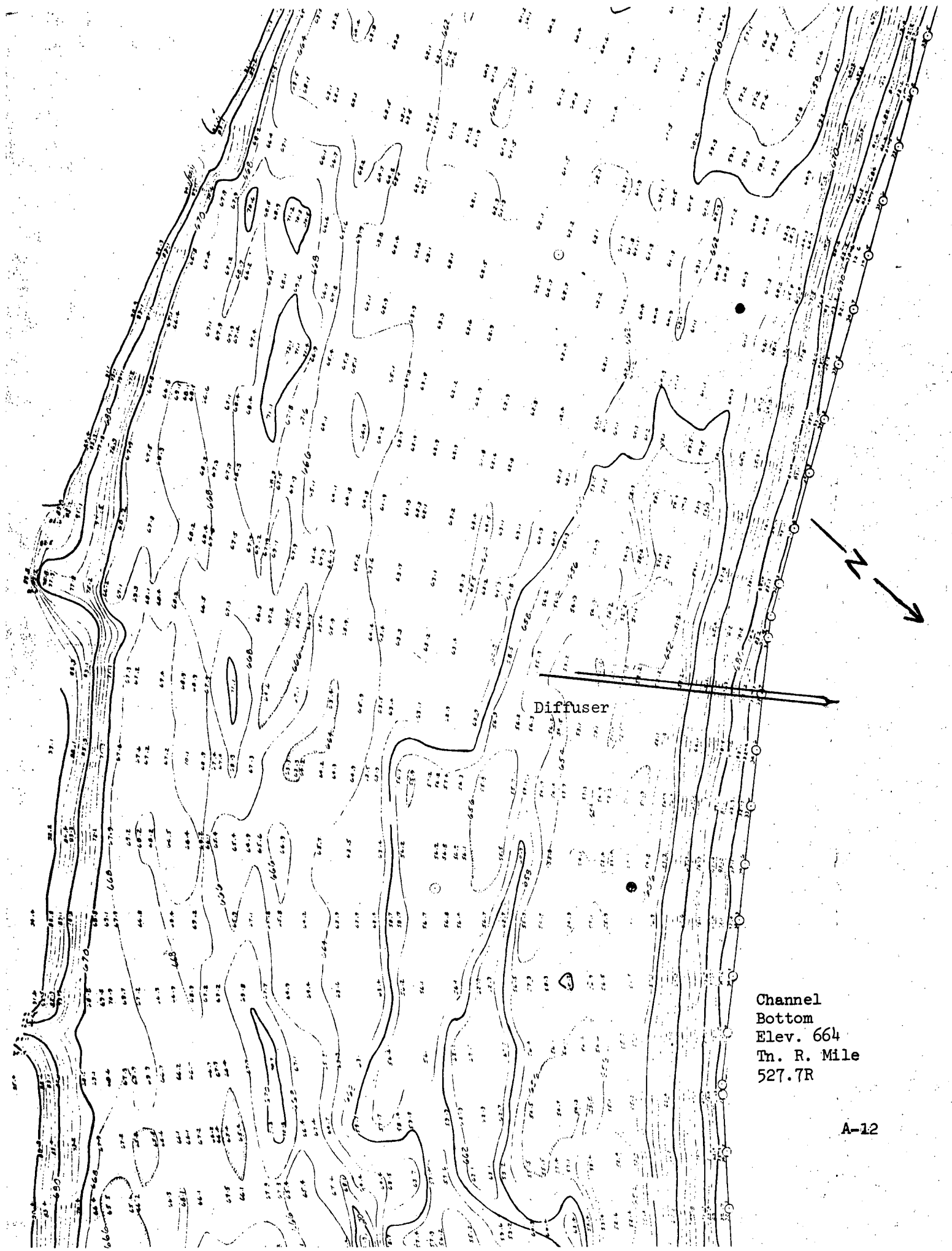
Diffuser
N
Channel
Bottom
Elev. 664
Tn. R. Mile
527.7R

Ray Blanton
GOVERNOR

Eugene W. Fowinkle, M.D., M.P.H.
Commissioner

STATE OF TENNESSEE
DEPARTMENT OF PUBLIC HEALTH
NASHVILLE 37219

March 19, 1976

Dr. Peter A. Krenkel
Director of Environmental Planning
Tennessee Valley Authority
Chattanooga, Tennessee 37401

Re: Change of Proposed
Location of Diffuser Pipe
from Watts Bar Nuclear Plant

Dear Dr. Krenkel:

Your letter of February 10, 1976, to Mr. John W. Saucier requested comments on the change in the proposed location of the diffuser pipe at the Watts Bar Nuclear Plant to a site approximately 1000 feet upstream of the site previously chosen. The entire matter is somewhat confused. The final environmental statement does not indicate the location except for a schematic (Figure 2.5-1) which shows the diffuser somewhat downstream of the intake structure. The intake structure is at Tennessee River mile 528.0 as shown by Figure 1.1-2. More exact information on the diffuser has not been transmitted to Water Quality Control Division.

Your letter states that the new location will lessen the impact on the mussel beds in the area. Based on the information in your letter and in the final environmental statement, it is the opinion of the staff of Water Quality Control Division that the change of location will not significantly exacerbate the environmental consequences. The Division, therefore, offers no objection to the change of location.

The third paragraph of your letter discusses disposal of 1600 cubic yards of spoil, but does not explicitly state that the designated spoil area is onshore. The statement that Water Quality Control Division offers no objection to the new location is based on disposal of spoil onshore.

Thank you for the information on the change.

Sincerely,

Wm Harold Martin

William H. Martin, Assistant Director
Division of Water Quality Control

WHM/CAS/grr

cc: Rhea County Health Department
cc: Division of Water Quality Control - Chattanooga

DEPARTMENT OF THE ARMY
NASHVILLE DISTRICT, CORPS OF ENGINEERS
P. O. BOX 1070
NASHVILLE, TENNESSEE 37202

IN REPLY REFER TO

ORNED-P

30 April 1976

Dr. Peter A. Krenkel
Director of Environmental Planning
Tennessee Valley Authority
Chattanooga, Tennessee 37401

Dear Dr. Krenkel:

We offer the following comments in response to your 10 February 1976 letter about the proposed relocation of Watts Bar Nuclear Plant blowdown diffuser pipes, Chickamauga Reservoir.

As stated in our 26 February 1976 letter, addressed to Mr. M. I. Foster, Division of Navigation Development and Regional Studies, we have no objections to the proposed action. However, because of the economic and ecologic importance of the existing mussel sanctuary, every effort should be made to control sedimentation from construction activity. Silt screens have been effective in controlling sedimentation and concomitant high turbidity in certain slack water situations. If appropriate, we urge you to consider their use. Further, disposal areas should be planned so that sediment from runoff is held to a minimum.

As you are aware, pollution, silting of rivers, and establishment of slack water environments have reduced our American mussel fauna, hence one reason for establishment of the mussel sanctuary by Tennessee Wildlife Resources Agency. If the 1600 cubic yards are to be removed by contract, strict supervision should be made by TVA field personnel to insure that sedimentation is held to a minimum.

We appreciate you advising us of the proposed change and the opportunity to comment.

Sincerely yours,

R. E. McLaughlin
for E. C. MOORE
Chief, Engineering Division

AMERICAN REVOLUTION BICENTENNIAL 1776-1976

May 14, 1976

Mr. Harvey Bray, Executive Director
Tennessee Wildlife Resources Agency
Ellington Agricultural Center
P. O. Box 40747
Nashville, Tennessee 37204

Dear Mr. Bray:

PROPOSED RELOCATION OF DIFFUSERS FROM WATTS BAR NUCLEAR PLANT

This refers to your March 2, 1976, letter in which you requested additional information concerning the status of the mussel beds between the original diffuser site and the Watts Bar Dam. The original diffuser location was along the right side of the channel at approximately TRM 527.6. The present planned diffuser location is still along the right side of the channel but relocated approximately 1000 feet upstream at about TRM 527.8.

Enclosed is a summary of the results of mussel surveys conducted by TVA during the summer of 1975 in the reach of the Tennessee River downstream from the Watts Bar Dam. As indicated in the summary, no mussel concentrations were found along the right river bank in the area where the diffuser is to be located. However, mussel concentrations were found along the left river bank in the reach between TRM 527.6 and TRM 528.5. No data concerning mussel populations in the 1.4 mile reach between TRM 528.5 and Watts Bar Dam (TRM 529.9) is included in the survey since the swift river currents in that area precluded collection activities by our scuba divers.

Based on the results of these surveys, and the proposed method of operation, it is our conclusion that relocation of the diffuser would not have a significant impact on the mussel population in this reach of the Tennessee River.

Please let me know if you have any further questions.

Sincerely,

J. Clement Randolph

Peter A. Krenkel, Ph.D., P.E.
Director of Environmental Planning

SUMMARY STATUS OF MUSSEL POPULATION BELOW WATTS BAR DAM

The mussel fauna below Watts Bar Dam is represented by at least 13 species (table 1). Virtually, all of these species prefer a substrate of firm, porous gravel or sand and gravel with a moderate to swift current. Based on findings of recent surveys, July and August 1975, in the area below Watts Bar Dam, the most suitable mussel habitat is in the vicinity of TRM 520.5 to 521.3 (tables II, III, and IV). Species variability, however, was not as great in the TRM 520.5 to 521.3 area as it was in the TRM 527.6 to 528.5 area. The numbers found (table I) and the concentrations (table III), based on numbers collected per minute indicate the 520.5 to 521.3 area to have the greatest population. Table III also indicates the presence of a good localized population in the immediate tailwater area at TRM 527.7. Differences in shell condition from these two areas were pronounced. Those from the TRM 527.6 to 528.5 area were eroded and abraded while those from the TRM 520.8 vicinity were in excellent condition--especially the commercially valuable Pleurobema cordatum. The bedrock substrate and swifter currents in the upstream area account for this difference in shell quality.

The mussel population from TRM 520.0 to 528.5 is apparently a viable one as animals as young as five years were found. Mussels younger than this are not often collected by divers in areas with large populations of Corbicula due to similarity in size.

We do not consider any species found below Watts Bar Dam endangered or threatened. However, Lampsilis orbiculata was tentatively given such status (Federal Register, Volume 39, Number 202, Thursday, October 17, 1974, page 37078). TVA consultants have recommended that "this species should not be listed as either endangered or threatened. L. orbiculata

is more widespread than the list indicates, but even locations noted are widespread, indicating probable lack of being endangered." The preceding is quoted from the consultants' report attached to a letter from TVA General Manager, Lynn Seeber, to the Director of the Fish and Wildlife Service dated January 8, 1975, with regard to fish and wildlife service notice entitled "Snails, Mussels and Crustaceans, Endangered Species" (Federal Register, Volume 39, Number 202, Thursday, October 17, 1974). No final ruling regarding threatened or endangered mussels has been made by the Department of Interior.

No mussel concentrations were located on the right side of the river in the general vicinity of the old or proposed diffuser pipe location. Therefore, relocation of the diffuser pipe 1,000 feet upstream from the original site should have no significant impact on the mussel population.

Table I

COMPOSITION OF MUSSEL POPULATION BELOW WATTS BAR DAM COLLECTED (ALL METHODS)

JULY AND AUGUST 1975

Name	Number from TRM 527.6 to 528.5	Number from TRM 520.5 to 521.3	Total	% of Total
Amblema plicata	6	2	8	5%
Quadrula pustulosa	9	20	29	19%
Quadrula metanevra	1	3	4	3%
Tritogonia verrucosa	2	1	3	2%
Cyclonaias tuberculata	5	15	20	13%
Pleurobema cordatum	12	21	33	22%
Elliptio crassidens	16	14	30	20%
Obliquaria reflexa	1	1	2	1%
Actinonaias carinata	1	0	1	<1%
Plagiola lineolata	2	7	9	6%
Proptera alata	6	3	9	6%
Ligumia recta	3	0	3	2%
Lampsilis orbiculata *	2	0	2	1%
Total	66	87	153	100%

* On Department of Interior list of proposed endangered species.

Table II

Square Meter Samples (By SCUBA)

TRM	Number of Replicate Sq. Meters	Total Number of Mussels
528.5 - 20 yards left bank	3	0
528.4 - 40 yards right bank	4	0
528.1 - 40 yards left bank	3	3
527.7 - 50 yards left bank	6	0
527.7 - 10 yards left bank	3	11
527.6 - 30 yards left bank	3	2

Average - .73 mussels per m^2

Of the twenty-two square meter samples taken, only five produced living mussels. Listed below are the square meter samples by location and the species they produced.

TRM	Number of Replicate Sq. Meters	Number and Species
527.6 - 30 yards left bank	1	1 - *Amblema plicata* 1 - *Lampsilis orbiculata*
527.7 - 10 yards left bank	1	1 - *Pleurobema cordatum* 1 - *Elliptio crassidens*
527.7 - 10 yards left bank	2	1 - *Amblema plicata* 1 - *Pleurobema cordatum* 1 - *Elliptio crassidens* 6 - *Quadrula pustulosa*
528.1 - 40 yards left bank	2	1 - *Elliptio crassidens*
528.1 - 40 yards left bank	3	1 - *Plagiola lineolata* 1 - *Ligumia recta*

Table III

Random Sampling (Two Divers)

TRM	Time in Minutes	Number of Mussels	Number of Mussels/Minute
528.5 - 25 yards left bank	20 min.	4	.2
528.4 - 40 yards right bank	5 min.	1	.2
528.2 - 30 yards left bank	20 min.	7	.35
528.1 - 40 yards left bank	20 min.	0	.0
528.0 - 40 yards left bank	10 min.	7	.7
527.7 - 40 yards left bank	5 min.	10	2.0
527.7 - 10 yards left bank	10 min.	16	1.6
520.8 - 30 yards left bank	27 min.	63	2.33
520.8 - 40 yards left bank	10 min.	15	1.5
Total	127 min.	123	Average .97/minute

Table IV

Brail Samples

TRM	Time in Minutes	Number of Mussels	Number of Mussels/Minute
528.1 to 528.0	20 min.	1	.05
528.0 to 527.3	210 min.	3	.014
521.0 to 520.9	14 min.	1	.07
520.8 to 520.7	16 min.	3	.18
520.8 to 520.7	20 min.	1	.05
520.6 to 520.5	20 min.	3	.15
520.6 to 520.5	20 min.	2	.1
Total	320 min.	14	Average .044/minute

TRITIUM DISPOSAL METHOD

The Watts Bar Nuclear Plant FES stated that tritium would be recycled to the maximum extent feasible and that beginning some 7 to 12 years after initial plant startup, aqueous solutions containing tritium wastes would be shipped offsite using tank trucks licensed for low specific activity liquids (see FES page 2.1-14). These shipments were to be sent to an AEC-licensed disposal site in accordance with applicable AEC and DOT regulations.

Operating data at a Westinghouse-designed reactor has shown that tritium buildup in the reactor coolant system may be excessive if total recycle is used and that undesirably high doses to inplant radiation workers might consequently result. Therefore TVA is reevaluating methods of tritium disposal. TVA is conducting a detailed study of PWR tritium disposal alternatives, which is expected to be completed in early 1977. Any planned release of radioactive materials would be performed in accordance with 10 CFR Part 50, Appendix I which ensures that radioactive materials in plant effluent releases to unrestricted areas are kept as low as is reasonably achievable. Concentrations of tritium in the environment resulting from this practice would be within a few percent of the limits as specified in 10 CFR Part 20 "Standards for Protection Against Radiation."

Such low concentrations of tritium in the environment are generally recognized to have a minimal effect on public health. By meeting the requirements of 10 CFR Part 50, Appendix I, it is believed that TVA would be assured of protecting the environment from unnecessary degradation and also that the routine release of small amounts of tritium to the environment would eliminate any hazards, however slight, from offsite shipment of these tritium wastes to an NRC-licensed disposal site. Thus, implementation of this practice would not be expected to result in a significant environmental impact.

WATER CHEMISTRY CHANGES

A. Steam Generator Water Chemistry

In the original plant design, feedwater entering the steam generators was to be treated by a coordinated phosphate treatment method. This method would have utilized sodium phosphate and hydrazine as additives to the feedwater. Some PWR plants using this type of treatment have experienced steam generator tube failures, while those employing all volatile treatment (ammonia and hydrazine additives) have had fewer tube failures. After analyzing operating results and laboratory studies, Westinghouse recommended that all volatile treatment be employed for Watts Bar Nuclear Plant. This change took place after TVA had decided to install reverse osmosis units and an evaporator unit (see discussions in this section on ADDITION OF CONDENSATE DEMINERALIZERS and ADDITION OF RADWASTE EVAPORATOR for additional information regarding these treatment systems). By not using sodium phosphate additions, there would be a slight reduction in the overall environmental impact; however, no significant impact is expected in either case.

B. Sodium Hypochlorination System

The Watts Bar Nuclear Plant FES stated that Asiatic clam populations in the Raw Cooling Water (RCW), Raw Service Water (RSW) and Essential Raw Cooling Water (ERCW) systems would be controlled by treatment with acrolein. Acrolein has not yet been approved by EPA as a chemical clamicide. In order to maintain the capability for controlling Asiatic clams at Watts Bar Nuclear Plant, TVA has decided to treat the RCW, RSW, and ERCW systems with sodium hypochlorite. Slime and algae control is

planned to be maintained by adding sodium hypochlorite to the Condenser Cooling Water (CCW) system and the Makeup Water Treatment Plant.

TVA plans to inject sodium hypochlorite as near to points of need as practical. Feed rates will be controlled using equipment for which flows are known or otherwise calibrated. It is anticipated that sodium hypochlorite injections will be made according to the following schedule:

I. Slime Control

Condenser Cooling Water (CCW) system - shock treatment, chlorinate 1 hr/day with total free chlorine residual of 0.2 mg/l at condenser outlet.

II. Asiatic Clam Control

Essential Raw Cooling Water (ERCW) systems - 32,000 gpm system flow, low-level continuous chlorination (May-October) with total free chlorine residual of 0.6 - 0.8 mg/l.

Raw Cooling Water (RCW) systems - 31,000 gpm system flow, two three-week periods of continuous treatment annually (beginning and end of Asiatic clam spawning season).

Raw Service Water (RSW) systems - 1000 gpm system flow, low-level continuous chlorination (May-October) with total free chlorine residual of 0.6 - 0.8 mg/l.

The principal constituents present in the above systems as a result of sodium hypochlorite addition will be sodium, chlorides, and a negligible amount of inert impurities found in the salt used for producing the sodium hypochlorite. Quantities of these constituents are presented in a revised version of Table 2.5-1 from the Watts Bar Nuclear Plant FES. The revised

Table 2.5-1 appears at the end of this discussion. During chlorination periods no discharges of residual chlorine in excess of the NPDES permit limitations will be allowed through the discharge diffusers. Findings of TVA's environmental review of the overall impact of nonradioactive chemical discharges are presented in Section B of this transmittal.

To accommodate anticipated plant use of sodium hypochlorite, TVA has determined that the capacity of onsite sodium hypochlorite generation facilities must be expanded. This will be accomplished by increasing the sodium hypochlorite generation capacity from 1000 lb/day to 2500 lb/day available chlorine.

C. Change in Chemical Usage for the Component Cooling Water System

The Watts Bar Nuclear Plant FES stated that sodium chromate would be used as a corrosion inhibitor in the component cooling water system (see page 2.5-11). Instead of using sodium chromate, TVA now plans to use sodium nitrite. The operating procedure will not change; hence, as the FES stated, there will be no discharges to the river. Therefore, no significant environmental impacts would be expected to accrue from this change.

(Revised) Table 2.5-1

SUMMARY OF ADDED CHEMICALS AND RESULTING END PRODUCT CHEMICALS

Watts Bar Nuclear Plant

Item No.	System	Chemical Treatment Source Chemical And Waste Products	Estimated Maximum Annual Use Lbs.	Waste End Product Chemical	Resulting End Product[a] Average Annual Lbs.	Resulting End Product[a] Mean Daily Lbs.
1	Makeup Water Filter Plant	Alum $Al_2(SO_4)_3 \cdot 18\ H_2O$	78,800	$Al(OH)_3$[b]	16,510	45
		Soda Ash Na_2CO_3	23,685	Na^+	10,300	28
				SO_4^{--}	30,600	84
				Settled Solids[b,c]	70,800	194
		Sodium Hypochlorite				
		NaOCl	770	Na^+	480[e]	<5.0
		NaCl	600	Cl^-	722[e]	<5.0
2	Makeup Water Demineralizer	Sulfuric Acid H_2SO_4 (93% Solution)	231,000	SO_4^{--} (Neutral pH)	217,000	595
		Sodium Hydroxide NaOH (50% Solution)	431,000	Na^+ (Neutral pH)	124,000	340
	Natural Minerals Removed by Demineralizers					
		Sodium Na^+	10,120	Na^+	10,120	28
		Chloride Cl^-	19,700	Cl^-	19,700	54
		Sulfate SO_4^{--}	21,750	SO_4^{--}	21,750	60
		Total Dissolved Solids	117,500	Dissolved Solids	117,500	322
3	Secondary Steam System Condensate Polishing Demineralizers h	Sulfuric Acid	590,100	SO_4^{--} (Neutral pH)	578,000	1580
		Sodium Hydroxide NaOH	353,500	Na^+ (Neutral pH)	203,260	560
	Ionized Soluble Species Removed by Demineralizers	-Carbonates (CO_3^{--})	25,400	CO_3^{--}	25,400	70
		-Ammonia (NH_4^+)	15,050	NH_4^+	15,050	41
		-Metallic Salts	d	d	d	d

(Revised) Table 2.5-1 (Cont)

SUMMARY OF ADDED CHEMICALS AND RESULTING END PRODUCT CHEMICALS

Watts Bar Nuclear Plant

Item No.	System	Chemical Added Source Chemical	Maximum Annual Use Lbs.	Waste End Product Chemical	Resulting End Product[a] Average Annual Lbs.	Resulting End Product[a] Mean Daily Lbs.
4	Auxiliary Steam Generator Blowdown	Ammonia NH_3	3[f]	NH_3	3	<0.1
		Hydrazine $H_2N_2H_2$	10[g]	NH_3	10	<0.1
5	Condenser Cooling[i] Water System	Sodium Hypochlorite				
		NaOCl	157,130	Na^+	97,050	265
		NaCl[i]	123,370	Cl^-	147,880	405
		<<Copper (corrosion product only)[k]		Cu	6,200	17
		<<Nickel (corrosion product only)[k]		Ni	690	1.9
6	Raw Cooling Water[i]	Sodium Hypochlorite				
		NaOCl	24,610	Na^+	15,575	43
		NaCl[j]	20,285	Cl^-	23,740	65
7	Raw Service Water[i] System	Sodium Hypochlorite				
		NaOCl	3,420	Na^+	2,165	6
		NaCl[j]	2,820	Cl^-	3,300	9
8	Essential Raw[i] Cooling Water	Sodium Hypochlorite				
		NaOCl	108,870	Na^+	67,280	185
		NaCL[j]	85,500	Cl^-	102,470	280

a. Items 1, 2, 4, 5, 6, 7, and 8 are based on 365 days/year operation at rated capacity. Item 3 based on 292 days/year operation at rated capacity.
b. Precipitated material that will make up the water treatment sludge on a day weight basis. Ultimately put in landfill. No discharge.
c. Estimates based on maximum suspended solids data observed at TRM 529.9.
d. The quantities of ionized soluble species continuously removed by the condensate demineralizers are predicated upon a primary to secondary leak rate or a condenser tube leak. These constituents will be discharged in the form of neutral salts of sodium, oxides of iron, or suspended solids. High crud filters will treat the backwash waste prior to discharge.
e. The residual chlorine and sodium consumed by the makeup demineralizers and ultimately discharged.
f. Ammonia will be added as needed to maintain pH of 9.0 in the system.
g. Hydrazine will be added as needed as a DO scavenger. Hydrazine conservatively assumed to decompose to ammonia.
h. Under radioactive conditions, this waste will be treated in the plants radwaste system.
i. Basis for calculated valves are shown elsewhere.
j. For each pound of equivalent chlorine as sodium hypochlorite produced, 0.785 pounds of sodium chloride are in the product solution.
k. Although copper and nickel will not be added to the systems, the values shown represent high estimates of corrosion losses. Actual losses are expected to be immeasurable.

MINOR CHANGES IN CONSTRUCTION PRACTICES

A. Chemical Cleaning Ponds

Two temporary chemical cleaning holdup ponds (cells) have been constructed within the main yard holding pond area. These temporary ponds are to be used for the containment and treatment of chemicals and waste water that will be used during preoperational cleaning and testing. The small pond has a volume of approximately 699,380 gallons and the larger pond has a volume of approximately 6,919,000 gallons. The ponds are located about 1,100 feet west of the unit 1 N-S centerline and 1,200 feet south of the E-W baseline. The embankments of the ponds are built-up dikes that will be leveled and graded to blend with the surrounding terrain upon retirement of the ponds. The small pond will have a polyvinyl liner to prevent seepage loss of the chemicals. The small pond, which will handle the more concentrated chemicals, is not expected to have significant quantities of any chemicals other than trisodium phosphate, hydrazine, ammonia, and detergents (e.g., triton X-100 and QS 30). The large pond will hold the diluted chemical waste flushing water and will have a 2-foot freeboard above the operating level to provide protection against overflow. Prior to discharge to the Tennessee River, the chemical cleaning wastes will be treated within the ponds so as to meet the applicable effluent limitations for this point source discharge. Treatment and subsequent discharge in this manner will not result in any significant adverse impacts to the aquatic environment. Findings of TVA's environmental review of the overall impact of nonradioactive chemical discharges are presented in Section B of this transmittal.

B. Changes in Grading Quantities

The table on page 2.8-4 of the Watts Bar Nuclear Plant FES (under "2.8(2) General grading and Excavation") does not include entries of 135,740 cubic

yards for "Grading and Excavation Earth" and 123,000 cubic yards for "Backfill or Embankment" that reflect a relocation of the essential raw cooling water pipes around the east side of the cooling towers. Inclusion of these entries raises the totals, respectively, by the above-stated quantities. The above action is in no way expected to result in a significant environmental impact at the Watts Bar Nuclear Plant.

C. Addition of Settling Pond for Siltation Control

The Watts Bar Nuclear Plant FES stated that the Twin Fork Slough would be given consideration for a possible natural sedimentation pond. Actual field conditions rendered it economically more feasible to develop another settling pond area nearby since greater quantities of excavation and piping would have been required to use the Twin Fork Slough. The pond to be used is located approximately 1,800 feet west of the N-S baseline and along the E-W baseline. This temporary pond will hold rainfall runoff from the construction site, thus allowing some of the suspended solids from the runoff to settle out prior to release to the reservoir. The volume of this pond is about 1 million cubic feet. There are four 20-inch diameter pipes for releasing effluent from the ponds. In cases of extremely high runoff (i.e., during a period of Probable Maximum Precipitation), runoff flow will be handled by a weir with its invert 2 feet above the invert of the pipes. After the pond is no longer needed, the earthen embankment will be leveled and graded to blend with the surrounding terrain.

The action described above satisfies the intent of the Watts Bar Nuclear Plant FES and also reduces the commitment of resources (excavation, piping, and monetary costs) in doing so. For this reason, we feel there is a reduction in environmental impact resulting from this change to the settling pond.

D. Use of Steam Plant Docking Facility

The Watts Bar Nuclear Plant FES indicated that TVA was considering the construction of a small docking facility on the Tennessee River for handling barge traffic in and out of the plant (see page 2.8-12 of the FES). Although only minor and infrequent interference with recreation and navigation would result from operation of such a facility, TVA has opted to use the existing coal-handling dock associated with the Watts Bar Fossil Plant. There would be no significant environmental impacts resulting from this change.

VISITOR FACILITIES

The Watts Bar Nuclear Plant FES stated that provisions would be made for picnic and recreational facilities and a visitors' information lobby at the Watts Bar site. TVA now plans to provide for an overlook on a ridge above the installation with picnic tables, sanitary facilities, and a display to provide information on the role of this plant in the production of electrical power. The overlook area will afford a panoramic view of the nuclear plant and associated support facilities as well as of the other two types of electrical generation facilities present at the Watts Bar site (fossil-fueled steam electric and hydroelectric). No new impacts significantly affecting the quality of human environment would ensue from these actions.

ADDITION OF CONDENSATE DEMINERALIZERS

The original plant design allowed no provisions for treatment of steam generator blowdown when the steam generators were operated with primary-to-secondary leakage. The design was modified so that potentially radioactive steam generator blowdown could be treated by reverse osmosis units and an auxiliary waste evaporator. The radioactive wastes recovered from treatment in the reverse osmosis system could then be concentrated during auxiliary waste evaporator processing and packaged for shipment to an NRC-approved offsite burial facility. After this design modification was made, generic problems with steam generator water chemistry were identified. Upon the recommendation of Westinghouse, TVA subsequently decided to employ all-volatile treatment for Watts Bar Nuclear Plant.

TVA has recently determined that with all-volatile treatment of the steam generators, condensate demineralizers should be added to protect the system against intrusion of impurities due to condenser leakage. As the condensate demineralizers would also have the capability for treating steam generator blowdown, the reverse osmosis-evaporator system discussed above would no longer be needed. It is expected that the condensate demineralizers will operate normally in a partial bypass mode, with approximately one-third of the flow from the condenser hotwell being passed through the demineralizers. The demineralizers will be switched to full flow operation upon detection of condenser leakage or primary-to-secondary leakage. This practice would ensure that radioactive materials released in steam generator blowdown to the reservoir are minimized and should result in lower quantities of radioactive materials in liquid effluents, thus providing a consequent reduction in radiological doses to downstream reservoir users.

Figure 2.4-1a (included at the end of this discussion) shows the routing of steam generator blowdown. The blowdown first enters a flash tank, where it is cooled as about one-half of the liquid entering the tank is converted to vapor. The vapor is recovered by sending it to a heater in the secondary system. The liquid is normally routed to the inlet header of the condensate demineralizers, so that liquid is processed whether the demineralizer is in bypass or full-flow operation. The liquid may also be routed to the condenser hotwell, from which it is pumped to the condensate demineralizers. This route is employed only when the demineralizers are in full-flow operation. The liquid may also be sent to discharge via the cooling tower blowdown line. This route will normally be used only during startups. Flow to discharge will be terminated manually when radioactivity is detected, and a radiation monitor will terminate the discharge automatically at a radioactivity concentration of 1×10^{-4} uCi/gm if it has not been terminated earlier by operator action. Upon termination of discharge, the blowdown flow is diverted, to the condensate demineralizers.

When a unit is operated with primary-to-secondary leakage, the demineralizers remove not only the radioactive materials in the steam generator blowdown, but also those materials that are carried over with the steam and are dissolved in the condensed steam. When the demineralizers are regenerated (with sulfuric acid and sodium hydroxide), the radioactive materials are removed into the spent regenerant liquid. If primary-to-secondary leakage is low enough that the spent regenerants contain less gross radioactivity than 10^{-4} uCi/gm, the spent regenerants are discharged to the cooling tower blowdown line. If the gross radioactivity content is greater than 10^{-4} uCi/gm, the regenerants are transferred to the floor drain collector tank for processing in the auxiliary waste evaporator. Most of the radioactive material is retained in the evaporator concentrates. The distillate, which is to be discharged to the cooling tower blowdown line, would contain less than 1/1000

of the radioiodines and less than 1/10,000 of the isotopes other than radioiodines that leaked from the primary system into the secondary system.

The condensate demineralizer system can handle any blowdown flow rate up to 120 gpm. This limit is imposed by the design of the blowdown piping. During periods of operation with condenser leakage or primary-to-secondary leakage, the blowdown rate will be maintained at or near the maximum. At other times, lower rates will be employed.

Condensate demineralizers are employed to treat all or part of the condensate pumped from the condenser hotwells. As described above, most of the steam generator blowdown is treated by the condensate demineralizers also. The principal constituent of both these streams is ammonia, used in treatment of secondary system water. Both streams also contain corrosion products from the condenser, steam generators, and system piping. During operation with condenser leakage, impurities contained in the condenser cooling water will be present in the condensate. During operation with primary-to-secondary leakage, the steam generator blowdown and, to a lesser extent, the condensate contain fission and corrision products and boric acic from the primary system.

Impurities in the influent to the condensate demineralizers will be in the forms of suspended particles and dissolved materials. The demineralizers will act as filters in removing suspended particles and dissolved ionic impurities will be removed by ion exchange. The demineralizers are regenerated periodically with sulfuric acid and sodium hydroxide. The process to be employed at Watts Bar Nuclear Plant will reduce, by about one-half, the amounts of these chemicals employed in conventional condensate demineralizer regeneration systems.

The regeneration process removes the impurities that have been accumulated in the demineralizers. Regenerant waste solutions will be discharged to the cooling tower blowdown line when they contain less than 10^{-4} uCi/gm of gross radioactivity. It is expected that in normal operation, radioactivity will be much lower than 10^{-4} uCi/gm. Revised Table 2.5-1 (included in the discussion in this section on WATER CHEMISTRY CHANGES) shows expected quantities of ammonia and other constituents discharged annually as condensate demineralizer regeneration wastes. The data in this portion of the table are based on the assumptions that the demineralizers are operated on a full-flow basis. A description of the condensate cleanup system is given in Section 10.4.6 of the Watts Bar Nuclear Plant Final Safety Analysis Report. Findings of TVA's environmental review of the overall impact of nonradioactive chemical discharges are presented in Section B of this transmittal.

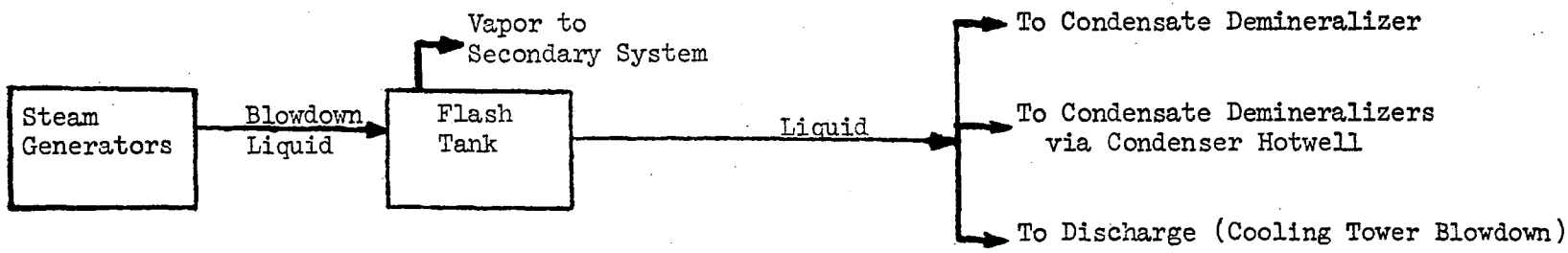

Figure 2.4-1a
Steam Generator
Blowdown Treatment

ADDITION OF RADWASTE EVAPORATOR

In order to have capability for processing condensate demineralizer wastes when both units are operating with primary-to-secondary leakage, TVA has decided to install an additional evaporator in the liquid radwaste system at Watts Bar Nuclear Plant. This forced circulation evaporator, termed the Condensate Demineralizer Waste Evaporator, will be rated at 30 gpm. When simultaneous primary-to-secondary leakage occurs in both units of the plant, having this additional evaporator capacity would allow operation of both units instead of only one, thereby indirectly increasing the potential radwaste output. The incremental amount of radwaste produced annually as a result of using the additional evaporator capacity (as necessary) during simultaneous primary-to-secondary leakage events in both units is, however, not expected to exceed a small fraction of the total annual quantity of radwaste produced at the plant. This additional evaporator may also serve as a backup to the Auxiliary Waste Evaporator.

Of course, procedures for the release of radioactive materials to the environment will be established and controlled by the technical specifications issued for Watts Bar Nuclear Plant and, additionally, all applicable regulations (e.g., 10 CFR Part 20, 10 CFR Part 50, and 10 CFR Part 50, Appendix I) must be met. Appendix I calculations for Watts Bar Nuclear Plant used source terms that included the operation of this evaporator. The results of the Appendix I calculations showed no significant environmental impact.

OTHER CHANGES, MISCELLANEOUS ITEMS

A. Dewatering of Radioactive Demineralizer Wastes

The Watts Bar Nuclear Plant FES stated that demineralizer resin wastes would be solidified and that no significant environmental impacts were expected to result from this action since the specific radioactivity levels involved would be so low (see page 2.1-18). Instead, TVA plans to dewater the demineralizer resins prior to shipment in containers qualified for low specific radioactivity wastes. On an annual basis the volumes and weights of shipments involving demineralizer resins would be slightly less for dewatering than for solidification; hence, no significant impact is expected to result.

B. Cooling Tower Blowdown Holdup Modification

The Watts Bar Nuclear Plant FES stated that under certain low flow conditions in the vicinity of the Watts Bar Dam, cooling tower blowdown discharge from the nuclear plant to Chickamauga Reservoir would be discontinued (see FES pages 2.6-8 through 2.6-13). The capability for withholding blowdown during low flow conditions (as described in the FES) was based on the assumption that evaporation plus drift losses from the cooling towers would be greater than the inflow from the essential raw cooling water system (ERCW).

TVA has determined that under certain environmental conditions evaporation and drift losses from the cooling towers may be less than the inflow from the ERCW system, resulting in buildup of water in the cooling tower basins. In order to avoid this situation during periods of low flow (i.e., less than 3,500 cfs), valves located at the discharge diffusers, the steam

generator blowdown outlet, and radioactive waste system outlet would automatically be closed and the flow control valves (inlet to the yard holding pond) would be opened. This valving system, which will be interlocked with the hydroelectric units at Watts Bar Dam, will be automatically activated whenever releases from Watts Bar Dam are less than 3,500 cfs. However, it should be emphasized that this level of streamflow (3,500 cfs) is an operational limitation of the hydroelectric units at Watts Bar Dam and should not be considered as the minimum streamflow required for assimilation of waste discharges from the Watts Bar Nuclear Plant. This would divert cooling tower blowdown to the holding pond (see revised Figure 2.5-1 and Figure 2.5-1a included at the end of this discussion). Upon attaining sufficient river flow, discharges to the reservoir of blowdown stored in the yard holding pond along with that coming directly from the cooling towers would commence.

The temperature of combined yard holding pond drawdown and direct cooling tower blowdown would be approximately the same as normal cooling tower blowdown for a given set of environmental conditions, neglecting possible mixing in the yard holding pond due to effects of precipitation cooling and solar heating of the yard holding pond contents (both of which would be minimal). The discharge diffusers were designed to provide mixing sufficient to meet the State of Tennessee stream thermal standards assuming the yard holding pond discharge temperature equalled direct cooling tower blowdown (which is a maximum of 95° F.).

The environmental impact of this alternative procedure should be more favorable than with the original procedure. By maintaining continuous

blowdown from the cooling towers, no increase of dissolved solids concentrations above the normal operating levels (approximately a factor of 2) should occur within the heat rejection system. No significant new impact on the environment is expected to ensue from this action. Findings of TVA's environmental review of the overall impact of nonradioactive chemical discharges are presented in Section B of this transmittal.

C. Modifications to Makeup Water Treatment Plant

On page 2.5-8 of the Watts Bar Nuclear Plant FES, it was stated that wastes from the Makeup Water Filter Plant would be routed to a lagoon area and, as necessary, the sludge would be disposed of by burial on TVA property. It is now planned to dewater flocculator sludge and filter backwash to a product containing about 50 percent solids and bury this solid waste in an offsite approved sanitary landfill. The system has been designed to treat approximately 20,000 gallons of liquid.

Treatment of demineralizer wastes will no longer employ a weak cation resin neutralizer. A batch neutralization process that monitors and adjusts the pH to meet applicable discharge requirements will be used instead. The estimated quantities of chemicals to be discharged to the environment from the makeup demineralizer system have not changed from those previously listed in Table 2.5-1 of the Watts Bar Nuclear Plant FES. (A revised version of this table is included at the end of the discussion in this section on WATER CHEMISTRY CHANGES.) Findings of TVA's environmental review of the overall impact of nonradioactive chemical discharges are presented in Section B of this transmittal. Additionally, the reference to possible use of coagulation aids in the filter plant (see page 2.5-8 of the FES) cites an EPA approved list which may be out of date when

the plant becomes operational. EPA has revised this list once and may revise it again in the future. TVA's intent is to use coagulation aids, when necessary, in such a manner as to meet applicable requirements and to ensure that the environment will be protected.

No environmental impact significantly different from that discussed in the Watts Bar Nuclear Plant FES would be likely to result from the action described above. Due to the minor nature of these changes, no further considerations with regard to resulting environmental impacts are warranted.

D. Modification to Liquid Radwaste System Procedures

The Watts Bar Nuclear Plant FES stated that releases from the Liquid Radwaste System tanks through the discharge pipe to the reservoir would be controlled by a 2-valve system that would be locked closed when not in service. One valve would be controlled by a radiation monitor and the other would be interlocked with a flow meter such that no radioactive liquid discharges would be permitted unless a dilution flow of at least 28,000 gpm existed. The purpose of this system was to provide assurance that radioactive liquid discharges would be diluted so as not to exceed applicable concentration limits. TVA now plans to employ this valve system with the dilution flow requirement of 20,000 gpm instead of 28,000 gpm. Since liquid radioactive effluent discharges would not be permitted to exceed the limits of 10 CFR Part 50, Appendix I for either flow requirement, no significant environmental impact should ensue from this change.

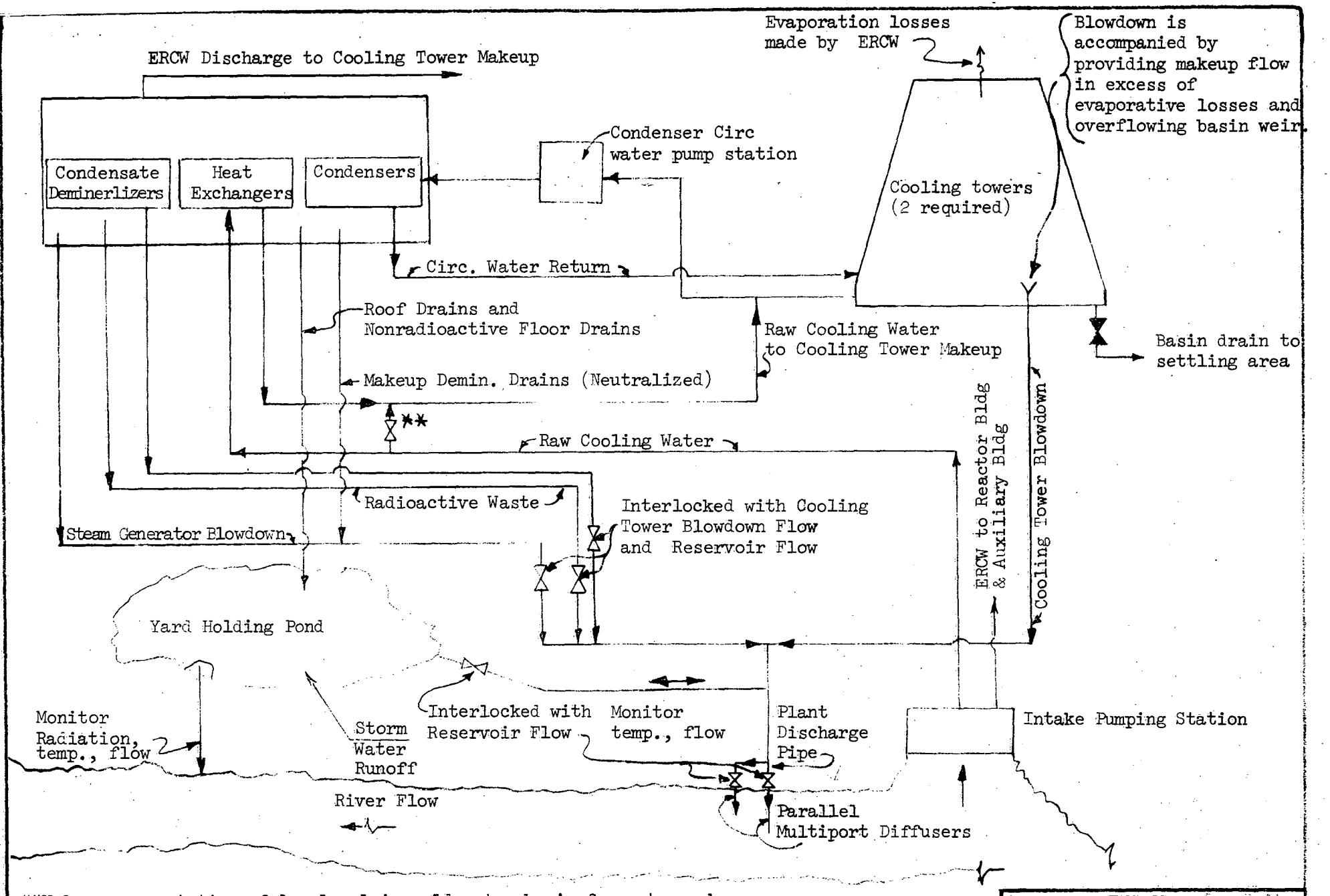

**Valve opens at time of low level in cold water basin for extra makeup.

FIGURE 2.5-1
FLOW DIAGRAM - DISCHARGE OF PLANT LIQUIDS
(REVISED)

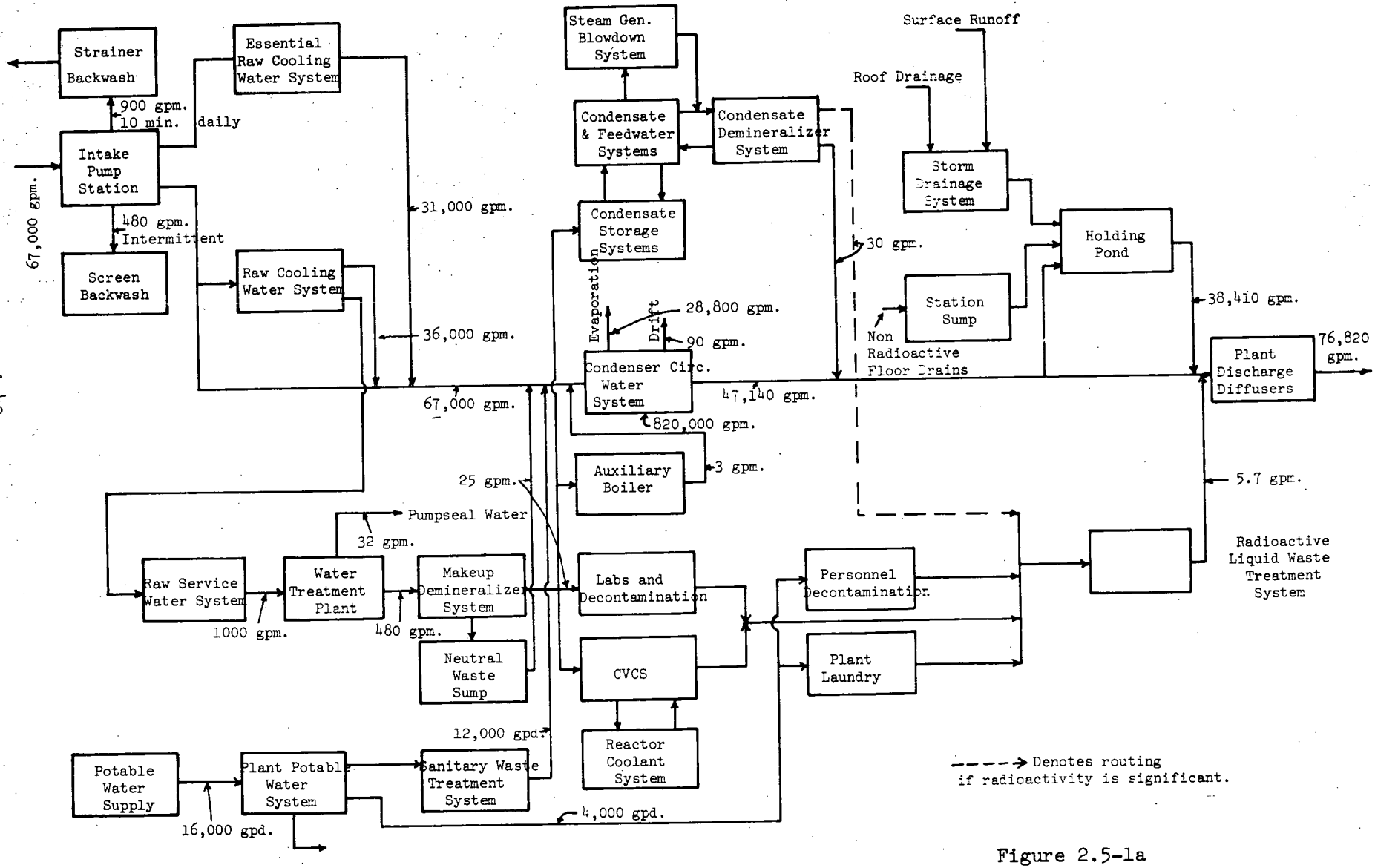

Figure 2.5-1a

PLANT WATER USE DIAGRAM

SECTION B

Included in this section are updated versions to parts of two subsections of the Watts Bar Nuclear Plant FES. These two subsections are "1.1 General Information," and "2.5 Nonradioactive Discharges." To facilitate your staff's review of these updated subsections, they have been presented in exactly the same format as the FES. All changes made to the text of these subsections are clearly denoted by vertical lines in the right-hand margin.

Subsection 1.1 of the FES has been revised to reflect results of the nonradiological water quality preoperational monitoring program and the current status of municipal and industrial water supplies in the Watts Bar Nuclear Plant area. The information as identified in this subsection is consistent with the water use information that has already been provided for the 10CFR 50 Appendix I evaluation of this project.

Subsection 2.5 of the FES has been specifically revised to incorporate: (1) acknowledgement of the need to obtain NPDES permits, (2) the assessment of corrosion losses within the cooling systems, (3) the changes in plant operation to provide for continued blowdown from the Condenser Cooling Water (CCW) System, (4) the use of chlorine (in the hypochlorite form) as a molluscicide rather than acrolein, (5) the change in waste treatment methods for the makeup water filter plant and the makeup demineralizer wastes, (6) the addition of condensate demineralizers, and (7) a revised description of the proposed method of treating chemical cleaning wastes. This revision to subsection 2.5 of the FES incorporates the related changes enumerated above (most of which are discussed individually in Section A of

this transmittal) and addresses the response of the aquatic environment in terms of impacts due to the overall differences from the FES in the quantity and/or quality of the combined discharge through the diffuser system.

Based on the results of this evaluation, it is TVA's conclusion that the resulting impacts upon the aquatic environment associated with the implementation of the changes identified in this section would be less than those previously identified in the FES.

Pages 1.1-1 through 1.1-9 have not been revised.

distinct aquifer in the Conasauga Formation at the Watts Bar site. The shales and limestones are essentially impervious, and the majority of the ground water flows through the terrace deposits overlying bedrock. Water level readings made in the exploration holes show that the water table stands approximately 20 feet above rock in the terrace material.

Preliminary ground water investigations made by measuring ground water levels in exploratory holes in the proposed plant area indicate a ground water gradient sloping toward Chickamauga Lake through the terrace deposits overlying bedrock. Migration of ground water through bedrock is insignificant as shown by the refusal of the rock to accept water at pressures of 50 lb/in^2 by water testing the exploratory holes. TVA will install a series of monitor wells to determine the seasonal ground water fluctuations and to provide baseline data.

(b) Surface water - Surface water is derived from precipitation remaining after losses due to evaporation and transpiration. It can be generally classified as local surface runoff or streamflow.

(c) Water use - The Tennessee River from its head near Knoxville to its mouth near Kentucky Dam is a series of highly controlled multiple-use reservoirs. The primary uses for which this chain of reservoirs was built are flood control, navigation, and the generation of electric power. In addition to these, other industrial and public uses have developed, such as sport and commercial fishing, industrial and public water supply, recreation, and waste disposal.

There are four public water supplies taken from Watts Bar and Chickamauga Reservoirs within the reach from Lenoir City, Tennessee, 73 miles upstream of the site, to

the Daisy-Soddy-Falling Water Utility District 45 miles downstream of the site in the Soddy Creek embayment of Chickamauga Reservoir. The intake for Lenoir City, Tennessee, is located on Watts Bar Reservoir some 73 miles upstream from the Watts Bar Nuclear Plant site. There are no public water supplies taken from the Tennessee River between the Watts Bar Dam and plant site. The closest downstream surface water supply is Dayton, Tennessee, at TRM 503.8 (25 miles downstream), which serves 6,150 people. The Daisy-Soddy-Falling Water Utility District, which serves about 8,500 people, has a water intake on Soddy Creek embayment of Chickamauga Reservoir about 45 miles below the plant site.

The present water supply intake for the Tennessee-American Water Company, which serves a population of about 270,000 in the metropolitan Chattanooga area, is located in the headwaters of Nickajack Reservoir at TRM 465.3 approximately 63 miles downstream from the site and 6 miles downstream from Chickamauga Dam. Studies are being made by a task force organized by the Tennessee Department of Public Health to evaluate the present water supply source and intake location for the City of Chattanooga and recommend any needed action to the State Health Department.

The East Side Utility District had developed plans to locate a surface water supply intake on the Wolftever Creek embayment of Chickamauga Reservoir about 52 miles downstream from the site. However, the district has subsequently decided to continue using its present ground water supply (wells) and has abandoned any definite plans to develop a surface water supply in the foreseeable future.

There are 18 public water systems within a 20-mile radius of the proposed site that depend either totally or in part on ground water as a source of supply. The City of Decatur now obtains its supply from Breedenton Spring, located near the left bank of the Tennessee River about 5 miles downstream from the site. Engineering studies have been made to evaluate the feasibility of a proposed regional water system that would serve both the cities of Decatur and Spring City, as well as numerous small communities and outlying areas. The engineer's report recommends that the intake for such a regional system be located on Watts Bar Reservoir (TRM 532L) about 4 miles upstream from the site. Watts Bar Dam, located between the proposed intake location and the plant site, would preclude any adverse impact resulting from the discharge of liquid effluents from the plant. The ground water supply and the distribution system which was developed for the nuclear plant and the Watts Bar Reservation have been designed so as to be readily incorporated within the regional system whenever it is developed. Public water supply information is included in Table 1.1-13 and the locations are shown on figure 1.1-5.

There are six industrial water supplies taken from Watts Bar and Chickamauga Reservoirs between Tennessee River mile 592 and mile 473. This includes the supply for TVA's Watts Bar Steam Plant which is taken from the Tennessee River at mile 529.9 through an intake constructed as part of Watts Bar Dam, and the supply for Watts Bar Nuclear Plant itself. The industrial water supplies located within a 20-mile radius of the plant and those industrial supplies obtained from the Tennessee River between miles 592 and

473 are summarized in Table 1.1-14. Those industrial supplies in the table also using the supplies for potable water within the plant are so indicated. All other industrial users purchase potable water.

The major industrial water users are downstream from the plant site. These industries withdraw a total of about 164 million gallons of process water from Chickamauga Reservoir each day. Seven industrial water supplies are taken from wells and springs within a 20-mile radius of the plant site. Olin Mathieson Chemical Corporation and Bowaters Southern Paper Corporation obtain water from the Hiwassee River, 22 and 23 miles upstream from its mouth, respectively. The Watts Bar Nuclear Plant will use a maximum of about 111 million gallons of water each day.

(8) Land use - The existing land use around the Watts Bar Nuclear Plant site reflects the trends of development taking place within the larger Great Valley of east Tennessee. This pattern is essentially the development of small satellite cities focusing on the major metropolitan centers of Knoxville and Chattanooga.

Pages 1.1-14 through 1.1-21 have not been revised.

cannot be made, the data indicate that the upper end of Chickamauga Reservoir plays a significant role in production of the fisheries resource of the reservoir, especially in terms of the reproduction and early growth of game and forage species.

Data for 1971-72 indicate an annual commercial fish harvest of approximately 307,000 pounds in Chickamauga Reservoir and the principal commercial species were catfish, buffalo, and carp.[3]

(10) Chemical and physical characteristics of air and water -

(a) Air - The general physical characteristics were described previously under Climatology and Meterology. The only air quality data collected from the vicinity of the plant are from two settled particulate samplers that were placed in operation in April 1969. The location of these samplers is shown in figure 1.1-10. The data collected to date are summarized in Table 1.1-18 and represent measurement of settled particulate from all sources. The highest monthly reading registered was 21 tons per square mile and occurred in June 1971.

Additional baseline data on the chemical and physical characteristics of the air in the vicinity of the plant will be gathered as monitoring programs are instituted prior to plant operation.

(b) Water - The Watts Bar Nuclear Plant will be located on Chickamauga Reservoir approximately 2 miles below Watts Bar Dam. The drainage area of the Tennessee River

at the site amounts to 17,320 square miles. At the plant site Chickamauga Reservoir is about 1,100 feet wide with the depths ranging up to 25 feet at normal pool, elevation 682.5. A 9-foot navigation channel is maintained past the site. The reservoir lies generally in a northeast-southwest direction with flow toward the southwest.

The Watts Bar Dam discharge records, maintained since its closure on January 1, 1942, indicate that the average discharge at the dam has been 26,480 ft^3/s. The maximum discharge occurred on December 30, 1942, and was 187,000 ft^3/s. Flow data for water years 1951-65 indicate an average flow of about 21,500 ft^3/s during the summer months and about 35,500 ft^3/s during the winter months. These data reflect for all practical purposes the volume of water that passes the plant site since there is less than 1 percent difference between the drainage areas at the plant site and the Watts Bar Dam.

Channel velocities at the plant site average 2.3 feet per second under average winter flow conditions and 1.0 foot per second under average summer conditions.

The most comprehensive source of water quality information available at the beginning of the Watts Bar project was a year-long water quality survey of Chickamauga Reservoir made by TVA beginning in May 1960.[4] This survey included some special sampling which continued into January 1962 and bacteriological determinations made at 6-day intervals during July, August, and September 1960, and May and June 1961, at 22 locations along the main stem and principal tributaries of the reservoir.

The results of this survey showed the overall reservoir water quality to be good. The overall bacteriological quality was good, and the water in the main stem of the reservoir was relatively low in organic content. Color and odor concentrations were low. The main stem waters were slightly hard (up to 80 mg/l), but satisfactory for practically all industrial uses.

Water temperature observations at selected Tennessee River stations were included in the data collected during the 1960-61 survey. These observations indicate that Chickamauga Reservoir is stratified during summer months, although stratification does not occur in the 20 miles immediately downstream from Watts Bar Dam. Bottom temperatures observed at TRM 487.7 (table 1.1-21) ranged from 41.5°F in January (1961) to 77.9°F in August (1960); surface temperatures ranged from 41.7°F in January (1961) to 81.9°F in July (1960). Temperature data at TRM 487.5 (table 1.1-22) collected over a 5-year period (1943-48) by TVA indicated little variation in these temperature patterns. It was concluded that water in Chickamauga Reservoir is well mixed except during the summer period when stratification occurs in the downstream one-half of the reservoir.

The survey also showed that dissolved oxygen (DO) concentrations in Chickamauga Reservoir were quite high during the winter and spring months. During the summer and fall months, however, the dissolved oxygen concentrations in the upper 20 miles of the reservoir were depressed because of low DO concentrations occurring in the Watts Bar Dam releases.

More recent data confirms that water passing into Chickamauga Reservoir through Watts Bar Dam continues

to be of overall good quality. A monthly sampling program, encompassing over 50 water quality parameters, has been in effect at Watts Bar Dam tailrace from January 1973 through September 1976.[5] The water quality data observed during most of this period is summarized in Table 1.1-19.

The dissolved oxygen concentrations of the Watts Bar Dam releases for the years 1960-75 are summarized in Table 1.1-20. Significantly increased DO levels are apparent, beginning in 1972. This improvement is primarily due to the installation of secondary wastewater treatment facilities at Knoxville, Tennessee. The release of water low in DO through low level intakes from deep headwater reservoirs located upstream is the remaining reason for low DO releases from Watts Bar Dam. TVA is investigating methods of increasing the DO levels in the releases from its headwater reservoirs.

Water temperature records for releases from Watts Bar Hydro Plant for 1965-75 are shown in Table 2.6-1 and show a maximum natural water temperature of 80.6°F.

More recent bacteriological studies[6] show that water continues to be of good quality at swimming and recreation areas on Chickamauga Reservoir.

(c) Temperature - Water temperature observations at selected Tennessee River stations were included in the data collected during the 1960-61 survey. These observations indicate that Chickamauga Reservoir is stratified during summer months,

---

5. Tennessee Valley Authority, Division of Environmental Planning. TVA Water Quality Monitoring Network, August 1974.

6. Tennessee Valley Authority, Division of Environmental Planning, The Bacteriological Quality of Water at Selected Recreation Areas in the Tennessee Valley, May 1975.

although stratification does not occur in the 20 miles immediately downstream from Watts Bar Dam. Bottom temperature observed at TRM 487.7 (Table 1.1-21) ranged from 41.5°F in January (1961) to 77.9°F in August (1960); surface temperatures ranged from 41.7°F in January (1961) to 81.9°F in July (1960). Temperature data at TRM 487.5 (Table 1.1-22) collected over a 5-year period (1943-48) by TVA indicate little variation in these temperature patterns. It may be concluded that water in Chickamauga Reservoir is well mixed except during the summer period when stratification occurs in the downstream one-half of the reservoir.

Water temperature records for releases from Watts Bar Hydro Plant for 1965-75 are shown in Table 2.6-1 and show a maximum natural water temperature of 27°C (80.6°F).

(11) Historical and archaeological significance of the Watts Bar site - No sites listed in the National Register of Historic Places, or known to be under consideration for such listing, are located at or near the proposed Watts Bar Nuclear Plant.

The project has been reviewed by the Tennessee Historical Commission and other appropriate agencies, and no specific items of particular historical significance have been identified.

An archaeological survey of the site was made in December 1970 by the University of Tennessee, Department of Anthropology. Investigations to determine archaeological significance of the site are discussed in Section 2.10, Other impacts.

Pages 1.1-27 through 1 1-38 have not been revised.

Table 1.1-13

WATER SUPPLIES WITHIN 20-MILE RADIUS OF SITE INCLUDING SUPPLIES TAKEN FROM TENNESSEE RIVER BETWEEN FORT LOUDOUN AND CHICKAMAUGA DAMS

Public Supplies

	Water Supply	Distance From Site[a]	Estimated Population Served	Average Daily Use	Source
		Miles		Gallons	
1.	Athens	13.7	15,000	1,852,000	Surface (Oostanaula Cr. 50%) and Ground, spring 50%
2.	Cedar Valley Elementary School	12.5	187	4,700	Ground, well
3.	Dayton	24.2	6,150	1,366,000	Surface (TRM 503.8)
4.	Decatur	3.3	1,500	117,000	Ground, spring
5.	Eastview Elementary School	19.7	130	3,200	Ground, well
6.	E. K. Baker School	9.2	340	8,500	Ground, well
7.	Englewood	19.2	1,810	253,000	Surface (Middle Creek 1.8)
8.	Evensville Elementary School	12.3	125	3,100	Ground, well
9.	Fairview Elementary School	3.0	180	4,600	Ground, well
10.	Frazier Elementary School	11.7	153	3,800	Ground, well
11.	Idlewild Elementary School	8.6	173	4,300	Ground, well
12.	Midway High School	19.2	290	7,200	Ground, spring
13.	Niota	17.1	2,500	290,000	Ground, spring
14.	Paint Rock Elementary School	18.9	196	4,900	Ground, well

a. Radial distance to all supplies except those that take water directly from the Tennessee River which are shown as river mile distance from TRM 528.0.

Table 1.1-13
(Continued)

WATER SUPPLIES WITHIN 20-MILE RADIUS OF SITE INCLUDING
SUPPLIES TAKEN FROM TENNESSEE RIVER BETWEEN FORT LOUDOUN AND CHICKAMAUGA DAMS

Public Supplies

Water Supply	Distance From site[a]	Estimated Population Served	Average Daily Use	Source
	Miles		Gallons	
15. Riceville Utility District	17.0	581	18,000	Ground, spring 99%[b]
16. Rockwood	17.6	10,000	1,420,000	Ground, spring
17. Spring City	7.6	2,300	300,000	Surface (Piney River mile 5.7 - 33%) and Ground, spring 67%
18. Sweetwater	17.5	5,000	700,000	Ground, spring 90% and Surface (Sweetwater Cr. mile 21.6 - 10%)
19. Ten Mile Elementary School	7.9	170	4,200	Ground, well
20. Watts Bar Reservation[c]	1.9	480	44,980	Ground, well
21. Daisy-Soddy-Falling Water Utility District	44.7	8,500	400,000	Surface (Soddy Creek 4.2 - 67%) and Ground, well 33%
22. Lenoir City	73.3	6,600	950,000	Surface (TRM 601.3)
23. Savannah Valley Utility District	44.4	1,610	122,000	Ground, well

a. Radial distance to all supplies except those that take water directly from impounded waters of the Tennessee River, which are shown as river mile distance from TRM 528.0.

b. Has auxiliary water intake at King Creek embayment mile 1.3.

c. Supplies potable water to nuclear plant, steam plant, hydro plant, and resort area.

Table 1.1-14

INDUSTRIAL WATER SUPPLIES

	Water Supply	Distance From Site[a]	Number of Employees	Average Daily Use	Source
		Miles		Gallons	
1-I	Athens Hosiery Mill, Inc.	13.0	170	239,000	Ground, well
2-I	Athens Stove Works	13.8	400	160,400	Ground, well
3-I	Carolyn Products, Inc.	19.2	150	655,000	Surface (Sweetwater Creek)
4-I	Cherokee Photo Finishers	12.7	52	59,000	Ground, well
5-I	Crescent Hosiery Mills	15.6	125	25,000	Ground, well
6-I	Mayfield Dairy Farms, Inc.	15.0	345	290,000	Ground, well
7-I	Plastic Industries, Inc.	13.4	210	10,000	Ground, well
8-I	Southern Silk Mills	9.2[b]	850	300,000	Surface (Piney Creek)
9-I	Sweetwater Hosiery Mills	16.6[b]	90	24,000	Ground, well
10-I	Watts Bar Steam Plant	1.9	100	449,726,000[c]	Surface (TRM 529.9)
11-I	Watts Bar Nuclear Plant	-0-	300	111,166,500[d]	Surface (TRM 528.0)
12-I	ICI America, Inc. (Volunteer Army Ammunition Plant)	55.0	2,000	50,000,000	Surface (TRM 473.0)
13-I	Charles H. Bacon Company	63.5[b]	600	350,000	Surface (TRM 591.5 and spring)
14-I	C. F. Industries, Inc.	55.0[b]	210	3,140,000[e]	Surface (TRM 473.0)
15-I	Union Carbide Corporation	64.0	430	3,272,000	Surface (TRM 592.0)

a. Radial distance to all supplies except those that take water directly from impounded waters of the Tennessee River which are shown as river mile distance from TRM 528.0.

b. Water supply is also used for potable water within the plant.

c. Primarily cooling water.

d. Cooling water and cooling tower makeup.

e. Does not include approximately 81.0 MGD recirculation.

Pages 1.1-42 through 1.1-45 have not been revised. Table 1.1-20 (page 1.1-47) has been deleted while tables 1.1-19 and 1.1-21 have been placed in reverse order. All tables have been properly renumbered.

Table 1.1-19
SUMMARY OF WATER QUALITY DATA
TENNESSEE RIVER MILE 529.9

Parameter	Number of Observations	Observed Concentrations[a] Maximum	Minimum	Mean[c]	Number of Observations	Observed Concentrations[b] Maximum	Minimum	Mean[c]
Alkalinity (total, as $CaCO_3$), mg/l	38	82	36	54	8	59	57	57
Aluminum, µg/l	23	1800	<200	705	-	-	-	-
Arsenic, µg/l	24	5	<5	5	1	0	0	0
Barium, µg/l	23	<100	<100	<100	-	-	-	-
Beryllium, µg/l	22	<10	<10	<10	-	-	-	-
BOD (5-day, 20°C), mg/l	22	3.7	<1.0	1.4	-	-	-	-
Boron, µg/l	20	<1000	<100	<386	-	-	-	-
Cadmium, µg/l	23	13	<1	2	1	0	0	0
Calcium, mg/l[d]	39	23	8	19.2	10	23	19	21
Chloride, mg/l[d]	40	35	4	6.8	7	7.9	3.4	5.7
Chromium, µg/l	23	5	<5	5	1	<10	<10	<10
Cobalt, µg/l	4	<5	<5	<5	1	1	1	1
COD, mg/l	40	11	3	5.9	-	-	-	-
Color, PCU	40	30	5	12.2	-	-	-	-
Copper, µg/l	23	90	<10	20.5	1	11	11	11
Fecal Coliforms, no. per 100 ml	16	20	<10	11	6	82	3	29
Fluoride, mg/l[d]	38	0.1	0.04	0.08	10	0.3	0.0	0.14
Hardness (Ca + Mg), mg/l	39	79	31	67	10	77	66	71
Iron (total), µg/l	39	1300	190	498	1	670	670	670
Iron (dissolved), µg/l	24	200	<50	75	1	30	30	30
Lead, µg/l	23	130	<10	15.5	1	26	26	26
Lithium, µg/l	17	<10	<10	<10	-	-	-	-
Magnesium, mg/l[d]	39	5.6	2.7	4.6	10	5.0	4.4	4.6
Manganese (total), µg/l	39	120	40	64	-	-	-	-
Manganese (dissolved), µg/l	24	40	<10	20	1	23	23	23
Mercury, µg/l	24	1.0	<0.2	0.3	1	0	0	0
Nickel, µg/l	23	290	<50	67	-	-	-	-
Nitrogen (ammonia), mg/l	40	0.18	<0.01	0.06	-	-	-	-
Nitrogen (Kjeldahl), mg/l	-	-	-	-	7	0.33	0.16	0.25
Nitrogen (nitrate plus nitrite), mg/l	38	0.79	0.11	0.39	7	0.53	0.18	0.41
Nitrogen (organic), mg/l	38	0.45	<0.03	0.17	-	-	-	-
pH, units	36	8.5	6.8	7.4	11	7.7	6.7	7.3
Phosphorus (total), mg/l	38	0.05	<0.01	0.03	8	0.05	0.02	0.04
Phosphorus (dissolved), mg/l	24	0.040	<0.010	0.017	-	-	-	-
Potassium, mg/l[d]	39	2.4	0.9	1.5	10	1.6	1.2	1.4
Selenium, µg/l	24	<2	<1	<2	-	-	-	-
Silica (total), mg/l	27	7.2	4.1	5.2	-	-	-	-
Silica (dissolved), mg/l	13	5.6	3.1	4.7	7	6.0	4.0	5.3
Silver, µg/l	23	<10	<10	<10	-	-	-	-
Sodium, mg/l[d]	39	50.0	2.3	6.4	10	7.3	2.9	4.6
Solids (dissolved), mg/l	36	180	60	94	7	116	79	92
Solids (suspended), mg/l	36	14.0	<1.0	7.5	11	43	4	11.9
Specific Conductance, µmhos	36	320	97	161	11	180	140	160
Sulfate, mg/l[d]	40	18.0	9.0	12.4	8	15.0	9.9	12.5
Titanium, µg/l	15	<1000	<1000	<1000	-	-	-	-
Total Organic Carbon, mg/l	19	4.7	1.6	2.4	1	3.1	3.1	3.1
Turbidity, JTU	92	60	<1	12.5	7	20	3	8.5
Zinc, µg/l	23	70	<10	20.5	-	-	-	-

a. Samples collected and analyzed by the Tennessee Valley Authority, January 1973-December 1975.
b. Samples collected and analyzed by the U.S. Geological Survey October 1974-September 1975.
c. Arithmetic mean, detection limit values averaged as real numbers.
d. TVA data represents analyses performed on an unfiltered sample; USGS data represents analyses performed on a filtered (0.45 µ filter) sample.

Table 1.1-20

SUMMARY OF WEEKLY OBSERVED DISSOLVED OXYGEN

CONCENTRATIONS IN THE TAILRACE OF WATTS BAR DAM

1960-75

Year	Observed Dissolved Oxygen Concentrations mg/l		Number of Days Dissolved Oxygen Less than Stated Concentration			
	Minimum	Maximum	3.0 mg/l Days	4.0 mg/l Days	5.0 mg/l Days	6.0 mg/l Days
1960	3.3	10.5	0	6	47	101
1961	4.7	11.8	0	0	3	73
1962	2.9	11.6	4	30	77	144
1963	2.3	11.5	11	50	98	121
1964	3.2	11.4	0	25	39	116
1965	2.7	10.7	6	46	95	131
1966	2.1	12.6	32	43	82	120
1967	3.9	13.5	0	2	23	71
1968	3.3	12.4	0	25	78	133
1969	2.2	11.0	10	66	96	122
1970	2.9	11.6	2	66	116	148
1971	3.0	10.8	0	36	86	146
1972	4.1	11.3	0	0	34	87
1973	4.2	11.5	0	0	26	56
1974	5.2	10.7	0	0	0	50
1975	3.9	13.3	0	2	21	47

This page is now blank due to deletion of Table 1.1-20 as per comments on page B-18.

Table 1.1-21

OBSERVED WATER TEMPERATURES - CHICKAMAUGA RESERVOIR *

Tennessee River Mile 487.7

July 1960 - June 1961

Date	Distance From Right Bank (% of Width)	Surface - depth 1 ft. Temperature	Bottom Temperature	Bottom depth, ft
July 12, 1960	50	81.9	75.6	38
August 5, 1960	50	81.7	77.9	35
August 23, 1960	50	79.0	76.5	37
September 22, 1960	50	76.9	74.1	40
October 18, 1960	50	73.6	72.1	36
November 22, 1960	50	55.6	55.0	36
January 18, 1961	50	41.7	41.5	35
February 21, 1961	50	46.6	46.6	40
March 21, 1961	50	52.5	52.5	40
April 18, 1961	50	57.9	56.5	44
May 16, 1961	50	65.8	63.9	42
June 14, 1961	50	78.3	72.0	48

*Data from Quality of Water in Chickamauga Reservoir, 1960-1961, Division of Health and Safety, TVA

Table 1.1-22

OBSERVED MAXIMUM AND MINIMUM TEMPERATURES

Chickamauga Reservoir - Tennessee River Mile 487.5

Calendar Year	Surface Temperatures, °F. *	
	Maximum	Minimum
1943	84.2	44.6
1944	82.4	41.0
1945	84.2	41.0
1946	84.2	42.8
1947	82.4	39.2
1948	82.4	42.8

* Data from Water Temperature of Streams and Reservoirs in the Tennessee River Basin, Hydraulic Data Branch, TVA

Table 2.6-1*
Observed Watts Bar Dam Tailrace
Water Temperature Data
(Weekly Observations)

Week Number	1965-1975 Average Temperature °C	1965-1975 Maximum Temperature °C
1	8.8	10.0
2	7.9	11.0
3	6.4	7.5
4	7.4	11.0
5	6.8	10.0
6	6.8	8.0
7	7.0	9.5
8	7.4	10.0
9	7.8	11.0
10	9.0	13.0
11	9.8	13.0
12	10.0	11.0
13	11.3	13.0
14	12.7	15.0
15	13.6	16.0
16	14.4	18.0
17	16.2	18.5
18	17.1	18.5
19	18.0	19.5
20	18.9	20.0
21	19.9	22.0
22	21.1	23.0
23	21.6	23.0
24	22.6	24.0
25	22.8	23.5
26	23.5	24.5
27	23.7	26.0
28	24.4	25.5
29	24.3	26.0
30	24.6	26.0
31	25.0	26.0
32	25.1	27.0
33	25.3	26.0
34	24.8	26.0
35	25.3	27.0
36	25.3	27.0
37	24.9	26.0
38	24.4	26.0
39	23.4	26.0
40	22.2	26.0
41	21.8	26.0
42	20.9	24.0
43	19.2	22.0
44	18.4	22.0
45	16.6	19.0
46	15.1	16.0
47	13.2	15.0
48	12.1	16.0
49	10.8	15.0
50	10.2	11.5
51	9.4	12.0
52	9.0	11.5

*This table has been included here in a revised form since the information it now contains is referenced from the revised text of subsection 1.1.

The figures of pages 1.1-51 through 1.1-54 have not been revised.

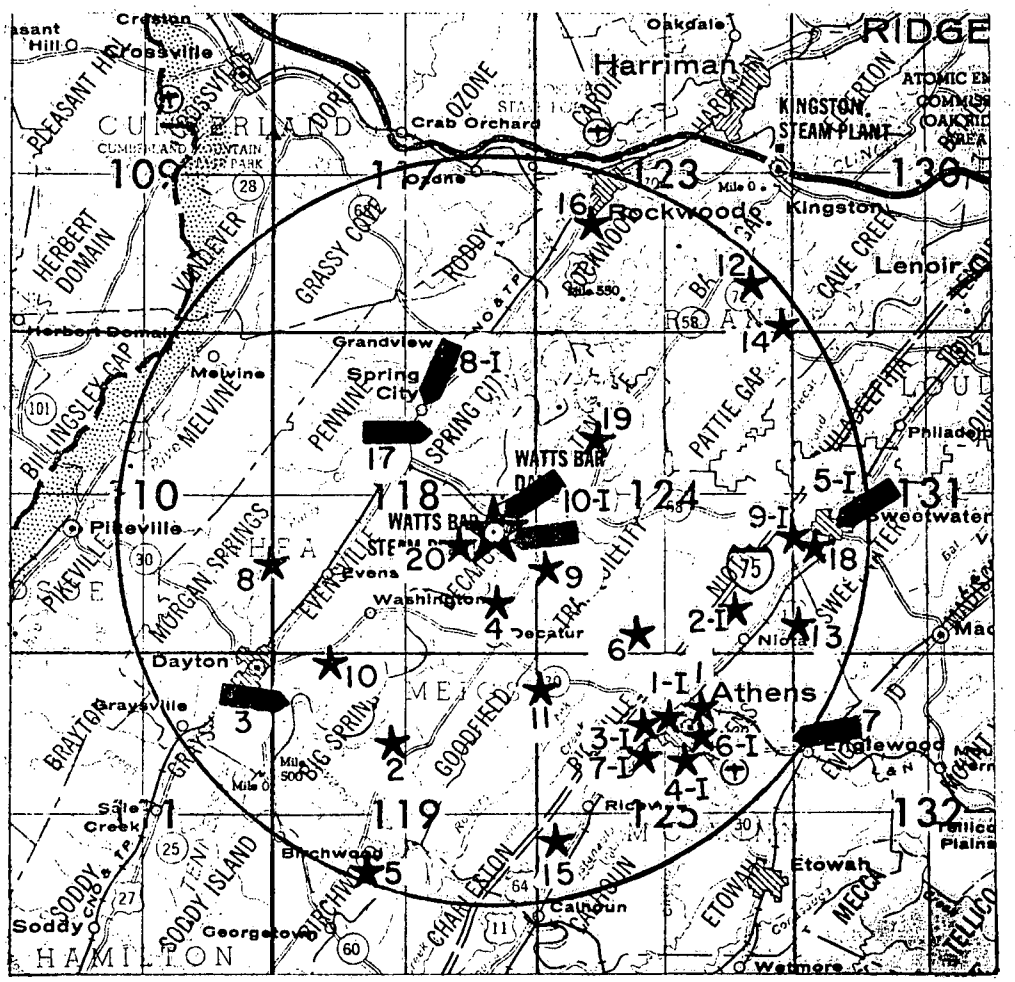

WATTS BAR NUCLEAR PLANT

★ Plant Site

▬ Surface Water Supply

★ Ground Water Supply

NOTE: The number associated with the symbol corresponds to the numbering in tables

FIGURE 1.1-5

Public Water Supplies Within a 20-Mile Radius of the plant site

Scale of Miles

10 0 10 20

The figures of pages 1.1-56 through 1.1-60 have not been revised.

2.5 Nonradioactive Discharges - It is TVA's policy to keep the discharge of all wastes from its facilities at the lowest practicable level by using the best and highest degree of waste treatment available under existing technology, within reasonable economic limits.

A description of the potential sources and amounts of non-radioactive discharges which have been identified is given in this section, along with a description of the specific treatment of these potential sources.

An NPDES permit application for the sanitary waste discharges from the construction facilities was filed with EPA on April 13, 1973. The NPDES sewage treatment plant permit No. TN0020168 was issued by EPA for these discharges on December 10, 1973. An NPDES permit application for other construction discharges was filed with EPA on July 21, 1975. The application for an NPDES operating permit is being finalized at the present time. The NPDES permit when issued by EPA will include specific effluent limitations for each regulated point source discharge along with appropriate monitoring and reporting requirements necessary to determine compliance with the effluent limitations.

1. Chemical discharges - TVA has altered the originally proposed design for handling plant effluents including the chemical discharges at the Watts Bar Nuclear Plant. These alterations in handling the plant chemical discharges are included in the present plant design for handling the plant effluents as shown schematically in Figure 2.5-1. This section describes the modified design and discusses the control and treatment of chemical wastes and the probable environmental impact of chemical releases.

The sources of these chemicals and the maximum expected quantity of chemical end products that could be discharged are summarized in Table 2.5-1. The average and the maximum expected total chemical concentrations in the discharge pipe and in the reservoir after initial jet mixing are shown in Table 2.5-2. The tables were generated using conservative assumptions for chemical usage and solids concentrations in the cooling towers. These computations show that even under adverse conditions and using conservative assumptions, impacts to the environment due to chemical discharges from the Watts Bar Nuclear Plant will be very small.

(1) Cooling tower blowdown and drift - Operation of the two natural draft cooling towers for the condenser circulating water system will evaporate approximately 64 ft^3/s of the flow to the towers during periods of high evaporation. Drift will also be carried from the towers but is not expected to exceed about 0.1 ft^3/s per tower. To control the dissolved solids concentrations in the condenser cooling water, a certain amount of blowdown from the towers and makeup to the towers must be provided.

Normal blowdown rate will be approximately 85 ft^3/s during periods of high evaporation. This will maintain a condenser cooling system solids concentration about twice the reservoir solids concentration. Blowdown will be returned to the river through a diffuser system designed to provide the best diffusion possible with the streamflow available and minimize environmental impacts due to disturbances of aquatic life during construction and operation of the plant.

Chemical additives other than intermittent chlorination for biological control should not be required for cooling water concentration factors normally held to about 2. The water in Chickamauga Reservoir at the Watts Bar site normally shows a scaling rather than a corrosive nature and use of corrosion inhibitors is not necessary.

Heat exchangers that could contribute to added corrosion products in the plant effluent include the main condensers, main feed pump turbine condensers, and raw cooling water system tubing material (90:10 copper-nickel). However, a closed-cycle cooling water system concentrates the scaling constituents in the recirculated water such that general corrosion of heat exchanger tube material is virtually nonexistent. Recent measurements of a 90:10 copper-nickel tube at Bull Run Steam Plant (after 10 years of service with once-through fresh-water cooling) revealed no measurable metal loss due to general corrosion.

As a worst case example, it can be assumed that the Bull Run measurement amounted to 1 percent tube loss (within the accuracy of the analysis), or as much as 0.1 percent tube loss per year as the average. Taking no credit for a reduction in corrosivity of the circulating water due to the concentrating effect of the cooling tower, the concentration of corrosion products added to the Watts Bar blowdown could be 35 ppb copper and 3.8 ppb nickel based on this assumption. Considering the reduced corrosivity during tower operation, the actual quantities of corrosion products are expected to be less than these values. There are no planned uses of corrosion inhibitors in the condenser cooling system.

As described in Section 2.6, Heat Dissipation, cooling tower blowdown will be retained in the holding pond when the releases from the Watts Bar Dam are less than 3,500 ft^3/s. During normal

operation of Watts Bar Dam these periods seldom exceed 12 hours in duration on any given day. During such periods, valves located at the cooling tower blowdown diffusers, in the steam generator blowdown outlet, and radioactive waste system outlet would automatically be closed and the flow control valves (inlet to the yard holding pond) would be opened. This valving system, which will be interlocked with the hydroelectric units at Watts Bar Dam, will be automatically activated whenever releases from Watts Bar Dam are less than 3,500 cfs. However, it should be emphasized that this level of streamflow (3,500 cfs) is an operational limitation of the hydroelectric units at Watts Bar Dam and should not be considered as the minimum streamflow required for assimilation of waste discharges from the Watts Bar Nuclear Plant. This would divert cooling tower blowdown to the holding pond (see Figure 2.5-1). Upon attaining sufficient river flow, discharges to the reservoir of blowdown stored in the yard holding pond along with that coming directly from the cooling towers would commence.

A water level indicator will be installed to alarm in the main control room of Watts Bar Nuclear Plant whenever the yard holding pond nears the overflow level. Upon alarm, a plant operator could notify Watts Bar hydroelectric plant personnel that streamflow is needed to allow discharge of yard holding pond contents to begin.

The temperature of combined yard holding pond drawdown and direct cooling tower blowdown would be approximately the same as normal cooling tower blowdown for a given set of environmental conditions, neglecting possible mixing in the yard holding pond due to precipitation cooling and solar heating of the yard holding pond contents (both of which are expected to be minimal). The blowdown diffusers were designed to meet the

State of Tennessee stream thermal standards assuming the yard holding pond discharge temperature equalled direct cooling tower blowdown (which is a maximum of 95° F.). This procedure should result in parameter concentrations that would not be expected to have a significant environmental impact. By maintaining continuous blowdown from the cooling towers, no increase of dissolved solids concentrations above the normal operating levels (approximately a factor of 2) should occur within the heat rejection system. The mean and maximum concentrations of trace metals expected to occur in the effluent and at the edge of the jet mixing zone (dilution of 9:1) are shown in Table 2.5-3.

Addition of sodium hypochlorite to the condenser circulating water may be necessary for biological control and, if used, will be fed at a rate to achieve a chlorine residual of 1 mg/l for 30 minutes per day per unit. Data collected at Paradise Steam Plant, where the chlorinated condenser circulating water discharges to a natural draft tower, indicated about 0.1 mg/l residual chlorine at the inlet to the tower and zero to a trace of chlorine in the tower basin during the injection period, when the chlorine residual was 0.7 mg/l in the condenser inlet and 0.4 mg/l at the condenser outlet.

It is anticipated that the Watts Bar cooling water will have a similar chlorine demand and that only trace amounts of residual chlorine would be discharged in the cooling tower blowdown.

Cooling tower drift is not expected to exceed 0.2 ft^3/s. This amount of drift would result in an average discharge of solids of less than 300 lb/d. The drift is expected to fall out in the immediate vicinity of the tower. No significant environmental impacts will occur since no area outside the immediate vicinity of the towers will receive significant concentrations of solids.

(2) Raw cooling water and essential raw cooling water systems - In order to have the capability for controlling Asiatic clam populations at Watts Bar Nuclear Plant, TVA has decided to treat the Raw Cooling Water (RCW), Raw Service Water (RSW) and Essential Raw Cooling Water (ERCW) systems with sodium hypochlorite. Slime and algae control is planned to be maintained by adding sodium hypochlorite to the Condenser Cooling Water (CCW) system and the Makeup Water Treatment Plant. TVA plans to inject sodium hypochlorite as near to points of need as practical. Feed rates will be controlled using equipment for which flows are known or otherwise calibrated. It is anticipated that sodium hypochlorite injections will be made according to the following schedule:

I. Slime Control

Condenser Cooling Water (CCW) system - shock treatment, chlorinate 1 hr/day with total free chlorine residual of 0.2 mg/l at condenser outlet.

II. Asiatic Clam Control

Essential Raw Cooling Water (ERCW) systems - 32,000 gpm system flow, low-level continuous chlorination (May-October) with total free chlorine residual of 0.6 - 0.8 mg/l.

Raw Cooling Water (RCW) systems - 31,000 gpm system flow, two three-week periods of continuous treatment annually (beginning and end of Asiatic clam spawning season).

Raw Service Water (RSW) systems - 1000 gpm system flow, low-level continuous chlorination (May-October) with total free chlorine residual of 0.6 - 0.8 mg/l.

The principal constituents present in the above systems as a result of sodium hypochlorite addition will be sodium, chlorides, and a negligible amount of inert impurities found in the salt used for producing the sodium hypochlorite. Quantities of these constituents are presented in a revised version of Table 2.5-1 from the Watts Bar Nuclear Plant FES. During chlorination periods no discharges of residual chlorine in excess of the NPDES permit limitations will be allowed from the condenser cooling system.

(3) Makeup water filter plant - Operation of the makeup water filter plant will require the use of lime, alum, and chlorine. Residual chlorine in the treated water will be removed by the makeup water treatment demineralizers and will be released as combined chlorides in the demineralizer regenerant solutions. Filter backwash water and clarifier sludge will contain aluminum hydroxide floc and settled solids. These wastes will be dewatered to a product containing about 50 percent solids and buried in an approved offsite sanitary landfill. The system has been designed to treat about 20,000 gallons of liquid.

The addition of a coagulation aid may be necessary for proper operation of the filter plant. Coagulation aids will be used, when necessary, in such a manner as to meet applicable requirements and to ensure that the environment will be protected.

(4) Makeup demineralizer wastes - Normal procedure for treatment of makeup demineralizer wastes is to hold the acid and caustic wastes in a tank, monitor pH, and adjust pH by addition of acid or caustic as required, and when pH is neutralized the waste is discharged from the plant. At Watts Bar Nuclear Plant makeup demineralizer regeneration wastes will be treated by a batch neutralization process that monitors and

adjusts the pH to meet applicable discharge requirements, and will then be pumped to the cooling tower blowdown stream. The estimated quantities of chemicals to be discharged to the environment from the makeup demineralizer system are listed in Table 2.5-1.

(5) Condensate demineralizer wastes - Condensate demineralizers are employed to treat all or part of the condensate pumped from the condenser hotwells. As discussed under ADDITION OF CONDENSATE DEMINERALIZERS (see Section A of this transmittal) most of the steam generator blowdown is also treated by the condensate demineralizers. The principal constituent of both these streams is ammonia, used in treatment of secondary system water. Both streams also contain corrosion products from the condenser, steam generators, and system piping. During operation with condenser leakage, impurities contained in the condenser cooling water will be present in the condensate. During operation with primary-to-secondary leakage, the steam generator blowdown and, to a lesser extent, the condensate contain fission and corrosion products and boric acid from the primary system.

Impurities in the influent to the condensate demineralizers are in the forms of suspended particles and dissolved materials. The demineralizers act as filters in removing suspended particles. Dissolved ionic impurities are removed by ion exchange. The demineralizers are regenerated periodically with sulfuric acid and sodium hydroxide. The process employed at the Watts Bar plant reduces by about one-half the amounts of these chemicals employed in conventional condensate demineralizer regeneration systems.

The regeneration process removes the impurities that have been accumulated in the demineralizers. The regenerant waste solutions are discharged to the cooling tower blowdown line when they

contain less than 10^{-4} uCi/gm of gross radioactivity (see discussion on ADDITION OF CONDENSATE DEMINERALIZERS located in Section A of this transmittal). It is expected that in normal operation, radioactivity will be much lower than 10^{-4} uCi/gm. Table 2.5-1 shows the quantities of ammonia and other constituents discharged annually as condensate demineralizer regeneration wastes. The data in this portion of the table are based on the assumptions that the demineralizers are operated on a full-flow basis.

(6) Component cooling water system - Sodium nitrite will be used as a corrosion inhibitor in the closed component cooling water system. When necessary for maintenance purposes, the nitrite-containing water will be drained from portions of the closed system. Whenever possible, the water will be returned to the system. If not, it will be routed to the radwaste system and processed by evaporation.

(7) Reactor coolant system - Boric acid, lithium hydroxide, and hydrazine will be used in the reactor coolant system. Hydrazine will be used only during startup. Letdown from this system will be processed as tritium-containing waste and recycled for reuse in the plant.

(8) Auxiliary steam generator blowdown - Two 40,000-pound-per-hour oil-fired steam generators will be supplied. One steam generator will operate continuously and one will operate during the heating season and intermittently during the remainder of the year. Hydrazine will be added continuously to the feedwater as a dissolved oxygen scavenger. The hydrazine concentration in the feedwater will be about 10-15 ug/l and within the system is expected to be at less than detectable concentrations. Ammonia will be intermittently added to the feedwater for pH control. Blowdown rate will vary from 2,000 to 4,400 gallons per day total for both steam generators and will result in an annual discharge of ammonia

of only about 13 pounds. The blowdown, which will have a residual ammonia concentration of about 0.3 mg/l, will be discharged to the condenser circulating water system. As shown in Table 2.5-2, contribution to the increases in the cooling water blowdown stream will not cause ammonia discharge concentrations to be significant.

(9) Chemical cleaning wastes - Two temporary chemical cleaning holdup ponds (cells) have been constructed within the main yard holding pond area. These temporary ponds are to be used for the containment and treatment of chemicals and waste water that will be used during preoperational cleaning and testing. The small pond has a volume of approximately 699,380 gallons and the larger pond has a volume of approximately 6,919,000 gallons. The ponds are located about 1,100 feet west of the unit 1 N-S centerline and 1,200 feet south of the E-W baseline. The embankments of the ponds are built-up dikes that will be leveled and graded to blend with the surrounding terrain upon retirement of the ponds. The small pond will have a polyvinyl liner to prevent seepage loss of the chemicals. The small pond, which will handle the more concentrated chemicals, is not expected to have significant quantities of any chemicals other than trisodium phosphate, hydrazine, ammonia, and detergents (e.g., triton X-100 and QS 30). The large pond will hold the diluted chemical waste flushing water and will have a 2-foot freeboard above the operating level to provide protection against overflow. Prior to discharge to the Tennessee River, the chemical cleaning wastes will be treated within these ponds so as to meet the applicable effluent limitation for this point source discharge. Treatment and subsequent discharge in this manner will not result in any significant adverse impacts to the aquatic environment.

(10) Miscellaneous - Most equipment cleaning and decontamination operations will be performed with high-pressure water and with detergent solutions. These liquids will be treated in the radwaste system by filtration and will be released to the cooling tower blowdown discharge line.

Some decontamination operations will involve the use of chemicals such as sodium phosphate, sodium permanganate, ammonium citrate, alkaline potassium permanganate, and nitric, citric, oxalic, acetic, and hydrofluoric acids. Although the amounts of such chemicals have not been determined at this time, they will not be discharged to the reservoir but will be drained to the chemical tank in the radwaste system. The solutions will be neutralized and either drummed directly or processed by evaporation and the concentrates drummed.

Inputs to the chemical drain tank in the radwaste system consist of laboratory drains and decontamination wastes. The principal chemical reagents used in the laboratory include sodium and ammonium hydroxides; hydrochloric, nitric, and sulfuric acids; ammonium acetate; and sodium carbonate.

Before the chemical drain tank is emptied, its contents are analyzed. If the liquid does not contain chemicals that would be harmful to the evaporator (principally, chlorides and sulfides) it will be processed in the auxiliary evaporator. The concentrates are drummed and the distillate is released to the reservoir in the usual manner. If the chemical drain tank contains chemicals that would be harmful to the evaporator, the contents are drummed without further processing. The contents of the tank are released to the reservoir only when analysis shows that no environmentally harmful concentrations of chemicals are present and the radioactivity level is within acceptable limits. It is expected that release would be an infrequent event.

Usage of detergents will be minimized for laundry and similar uses. Benefits gained by treatment of the small amount of detergent wastes are not great enough to justify radioactively contaminating a normally uncontaminated system such as the sewage treatment system. The detergent solutions will be filtered and discharged. Treatment and discharge of these detergent solutions in this manner are not anticipated to result in any significant environmental impacts.

It is anticipated that the cooling tower basins will be drained infrequently for maintenance purposes. When this operation is necessary, the contents of the tower basin will be routed to a settling area. Sludge removed from the tower basins will be buried onsite or on other TVA grounds. No significant environmental impacts are expected to occur from this operation.

The building drainage system (roof and high floor drains) drains into the storm drainage system and thence to the holding pool. These drains will handle only innocuous materials and present no hazard to the environment.

The station sump also discharges to the holding pool and would not normally handle any substances potentially detrimental to the environment. It may occasionally contain some oil which has leaked from some indoor machinery. Oil reaching the holding pool via this route will be reclaimed for disposal as described below for the yard drainage system.

2. Yard drainage system - An area of approximately 30 acres will be diked to provide a yard drainage holding pool. Any debris or oil which may be spilled and enter the yard drainage system will flow to

this pool. A skimming type outflow will be provided so that floating debris and oil cannot escape from the pool. This material will be periodically removed from the pool for disposal. It will be disposed of in a manner to minimize environmental impact, dependent on the character of the wastes, such as burial, landfill, or burning. Oil will be reclaimed for reuse when practicable. If not suitable for reuse it will be drummed and held onsite for disposal by the most environmentally suitable method.

3. Transformers and electrical machinery - Some oil leakage may occur from bearings and other parts of certain machinery inside buildings. The oil will be drained to an oil sump that will have adequate capacity to contain all spillage which will be drummed for ultimate disposal.

In the event of an outside oil spill from the main stepup transformer or insulating oil storage tank, the oil spillage will be routed to the storm drains and then to the holding pool. At the holding pool the oil will be reclaimed for reuse or disposal.

Diesel fuel oil for auxiliary boilers and lube oil will be stored in tanks in an area which will be depressed below the surrounding ground to form a basin of sufficient capacity to retain the contents of the enclosed tanks. During periods of rainfall, some runoff water may accumulate in the basin. A valved low-level discharge pipe will be provided for periodic removal of precipitation collected within this area and basin contents will be inspected prior to discharge to assure that oil will not be released by this mechanism. The valve will be maintained in a closed position at all other times to provide for retention of oil should the tanks rupture.

In the interest of fire prevention for indoor installations, either Askarel-filled or dry-type transformers will be used. When the former

is used, the transformer will be located within a concrete curb to prevent the possibility of spillage of this liquid, which contains polychlorinated biphenyls, from entering the common floor drainage system. A floor drain in the confined area will carry any spillage to a separate storage sump or else the curb will be made high enough to hold the entire liquid content of the transformer. In either case, the liquid will be drummed for proper disposal if not suitable for reuse.

4. Sanitary wastes - Extended aeration sewage treatment facilities will be provided during the construction period to treat the domestic wastes from a peak construction force of approximately 2,000 persons. Effluent from the plant will be chlorinated before entering the river. These treatment facilities will be complemented during construction by portable-type chemical toilets for use in isolated or remote areas of the project site. At the end of construction, these initially installed facilities will be removed to storage, surplus, or new construction.

Secondary treatment facilities with provision for chlorination will be provided for the permanent plant. It is estimated that the ultimate operating force will number 170 permanent employees. The treatment facility will be designed to handle approximately 300 persons including permanent and temporary employees and visitors. During periods when a large temporary maintenance force is working at the plant, the permanent waste treatment will be supplemented by portable-type chemical toilets.

Both construction and permanent systems will be operated to prevent untreated effluents from entering the river. The design will be in accordance with approved sanitation standards applicable to TVA facilities and will meet Tennessee Pollution Control Board requirements.

TVA routinely sends plans of its sanitary waste treatment facilities to the appropriate state pollution control organization for their information and files.

5. Gaseous emissions - Each oil-fired auxiliary steam generator is expected to operate at an average of about 75 percent capacity, which will result in both units burning a total of about 4.8×10^6 gallons per year of No. 2 fuel oil, having a maximum sulfur content of 0.5 percent.

The boilers are each rated at 40,000 lb/h steamflow with an input rating of about 55×10^6 Btu/h.

Emissions resulting from this operation were used to calculate the annual average ambient pollutant concentrations. For shorter averaging times (24 hours and less) both units were assumed to operate at full capacity, which results in burning 727 gallons/h of fuel.

The following emissions rates were used to calculate ambient pollutant concentrations:

Particulates	5.84 lb/h
Sulfur Oxides	5.74 lb/h
Carbon Monoxide	0.029 lb/h
Hydrocarbons	1.47 lb/h
Nitrogen Oxides	251.98 ton/yr

The emissions will be released through a stack which is approximately 127 feet above ground level.

Calculated maximum ambient pollutant concentrations resulting from these emissions, together with the applicable ambient standards, are given below.

Pollutant	Averaging Time	Calculated Concentrations	Secondary Ambient Standards
Particulates	24-hour	0.23 ug/m^3	150 ug/m^3
Sulfur Oxides	24-hour	8.78×10^{-5} ppm	0.14 ppm
Carbon Monoxide	1-hour	5.08×10^{-6} ppm	35 ppm
Hydrocarbons	3-hour	2.93×10^{-4} ppm	0.24 ppm
Nitrogen Oxides	1-year	7.07×10^{-5} ppm	0.05 ppm

For this evaluation of the emissions from the auxiliary boilers, it can be seen that the emissions will have a negligible environmental impact.

6. Normal solid waste disposal - Normal solid waste disposal during plant operations will be accomplished by contract collection and disposal in a State-approved sanitary landfill.

(Revised) Table 2.5-1

SUMMARY OF ADDED CHEMICALS AND RESULTING END PRODUCT CHEMICALS

Watts Bar Nuclear Plant

Item No.	System	Chemical Treatment Source Chemical And Waste Products	Estimated Maximum Annual Use Lbs.	Waste End Product Chemical	Resulting End Product[a] Average Annual Lbs.	Resulting End Product[a] Mean Daily Lbs.
1	Makeup Water Filter Plant	Alum $Al_2(SO_4)_3 \cdot 18\ H_2O$	78,800	$Al(OH)_3$[b]	16,510	45
		Soda Ash Na_2CO_3	23,685	Na^+	10,300	28
				SO_4^{--}	30,600	84
				Settled Solids[b,c]	70,800	194
		Sodium Hypochlorite				
		NaOCl	770	Na^+	480[e]	<5.0
		NaCl	600	Cl^-	722[e]	<5.0
2	Makeup Water Demineralizer	Sulfuric Acid H_2SO_4 (93% Solution)	231,000	SO_4^{--} (Neutral pH)	217,000	595
		Sodium Hydroxide NaOH (50% Solution)	431,000	Na^+ (Neutral pH)	124,000	340
	Natural Minerals Removed by Demineralizers					
		Sodium Na^+	10,120	Na^+	10,120	28
		Chloride Cl^-	19,700	Cl^-	19,700	54
		Sulfate SO_4^{--}	21,750	SO_4^{--}	21,750	60
		Total Dissolved Solids	117,500	Dissolved Solids	117,500	322
3	Secondary Steam System Condensate Polishing Demineralizers[h]	Sulfuric Acid	590,100	SO_4^{--} (Neutral pH)	578,000	1580
		Sodium Hydroxide NaOH	353,500	Na^+ (Neutral pH)	203,260	560
	Ionized Soluble Species Removed by Demineralizers	-Carbonates (CO_3^{--})	25,400	CO_3^{--}	25,400	70
		-Ammonia (NH_4^+)	15,050	NH_4^+	15,050	41
		-Metallic Salts	d	d	d	d

(Revised) Table 2.5-1 (Cont)

SUMMARY OF ADDED CHEMICALS AND RESULTING END PRODUCT CHEMICALS

Watts Bar Nuclear Plant

Item No.	System	Chemical Added Source Chemical	Maximum Annual Use Lbs.	Waste End Product Chemical	Resulting End Product[a] Average Annual Lbs.	Resulting End Product[a] Mean Daily Lbs.
4	Auxiliary Steam Generator Blowdown	Ammonia NH_3	3[f]	NH_3	3	<0.1
		Hydrazine $H_2N_2H_2$	10[g]	NH_3	10	<0.1
5	Condenser Cooling[i] Water System	Sodium Hypochlorite				
		NaOCl	157,130	Na^+	97,050	265
		NaCl[i]	123,370	Cl^-	147,880	405
		<<Copper (corrosion product only)[k]		Cu	6,200	17
		<<Nickel (corrosion product only)[k]		Ni	690	1.9
6	Raw Cooling Water[i]	Sodium Hypochlorite				
		NaOCl	24,610	Na^+	15,575	43
		NaCl[j]	20,285	Cl^-	23,740	65
7	Raw Service Water[i] System	Sodium Hypochlorite				
		NaOCl	3,420	Na^+	2,165	6
		NaCl[j]	2,820	Cl^-	3,300	9
8	Essential Raw[i] Cooling Water	Sodium Hypochlorite				
		NaOCl	108,870	Na^+	67,280	185
		NaCL[j]	85,500	Cl^-	102,470	280

a. Items 1, 2, 4, 5, 6, 7, and 8 are based on 365 days/year operation at rated capacity. Item 3 based on 292 days/year operation at rated capacity.
b. Precipitated material that will make up the water treatment sludge on a day weight basis. Ultimately put in landfill. No discharge.
c. Estimates based on maximum suspended solids data observed at TRM 529.9.
d. The quantities of ionized soluble species continuously removed by the condensate demineralizers are predicated upon a primary to secondary leak rate or a condenser tube leak. These constituents will be discharged in the form of neutral salts of sodium, oxides of iron, or suspended solids. High crud filters will treat the backwash waste prior to discharge.
e. The residual chlorine and sodium consumed by the makeup demineralizers and ultimately discharged.
f. Ammonia will be added as needed to maintain pH of 9.0 in the system.
g. Hydrazine will be added as needed as a DO scavenger. Hydrazine conservatively assumed to decompose to ammonia.
h. Under radioactive conditions, this waste will be treated in the plants radwaste system.
i. Basis for calculated valves are shown elsewhere.
j. For each pound of equivalent chlorine as sodium hypochlorite produced, 0.785 pounds of sodium chloride are in the product solution.
k. Although copper and nickel will not be added to the systems, the values shown represent high estimates of corrosion losses. Actual losses are expected to be immeasurable.

Table 2.5-2

SUMMARY OF CHEMICAL DISCHARGES
Watts Bar Nuclear Plant

Waste Product Chemical	Mean[a] Annual Discharge of Product Chemical lbs.	Waste Product[b] Chemical Contribution to Discharge Concentration mg/l	Observed[c] Concentrations in River at TRM 529.9 mg/l		Concentrations[d] in Effluent CF = 2 mg/l		Concentrations in[e] River at Edge of Jet Mixing Zone mg/l	
			Mean	Maximum	Mean	Maximum	Mean	Maximum
Sulfates SO_4^{--}	847,350	6.960	12.4	18	31.76	42.96	14.34	20.50
Sodium Na^+	530,230	4.355	6.4	50	17.16	104.36	7.48	55.44
Chlorides Cl^-[f]	297,812	2.437	6.8	35	16.04	72.44	7.72	38.74
Ammonia NH_3	14,227	0.117	0.06	0.18	0.237	0.477	0.078	0.210
Copper Cu[g]	<<6,200	<<0.051	<0.020	0.09	<0.091	0.231	<0.271	1.041
Nickel Ni[g]	<<690	<<0.006	<0.067	0.29	<0.140	0.586	<0.743	3.196
Dissolved Solids	1,762,439	14.422	94	180	202.42	374.42	104.84	199.44

a. Based on 365 days/year operation at rated capacity.
b. Equivalent concentration of added chemical end products in blowdown.
c. TVA data January 1973 - December 1975.
d. Concentration factor of blowdown = 2.
e. Based on jet diffuser designed to mix nine volumes of river water with one volume of plant discharge.
f. Computation is for chlorides since the chlorine demand of the cooling water is such that no residual chlorine will be discharged.
g. Although no copper or nickel will be "added" in plant operation, the values cited represent high estimates of corrosion losses. Actual losses are expected to be immeasurable.

(Revised Sept. 1976)

TABLE 2.5-3

SUMMARY OF OBSERVED TRACE METAL CONCENTRATIONS AND EXPECTED TRACE METAL CONCENTRATIONS IN THE EFFLUENT AND AT THE EDGE OF THE JET MIXING ZONE

Parameter Total	Observed Concentrations at TRM 529.9 Jan 1973 - Dec 1975 µg/l			Expected Trace Metal Concentrations - µg/l			
				In Effluent: CF=2[a]		at Edge of jet Mixing[b] zone: CF=2	
	Maximum	Minimum	Mean	Mean	Maximum	Mean	Maximum
Iron	1,300	190	498	996	2,600	547.8	1,430
Zinc	70	<10	<20.5	<41	140	<22.6	77
Barium	<100	<100	<100	<200	<200	<110	<110
Beryllium	<10	<10	<10	<20	<20	<11	<11
Silver	<10	<10	<10	<20	<20	<11	<11
Aluminum	1,800	<200	705	1410	3,600	775.5	1,980
Selenium	<2	<1	<2	<4	<4	<2.2	<2.2
Arsenic	<10	<5	<5	<10	<20	<5.5	<11
Manganese	120	30	64	128	240	70.4	132
Lead	130	<10	15	30	260	16.5	143
Chromium	5	<5	<5	<10	10	<5.5	5.5
Cadmium	13	<1	<2	<4	26	<2.2	14.3
Mercury	1.0	<0.2	<0.3	<0.6	2	<0.33	1.1

a. Concentration factor of blowdown = 2

b. Based on jet diffuser designed to mix 9 volumes of river water with one volume of plant discharge

Revised September 1976

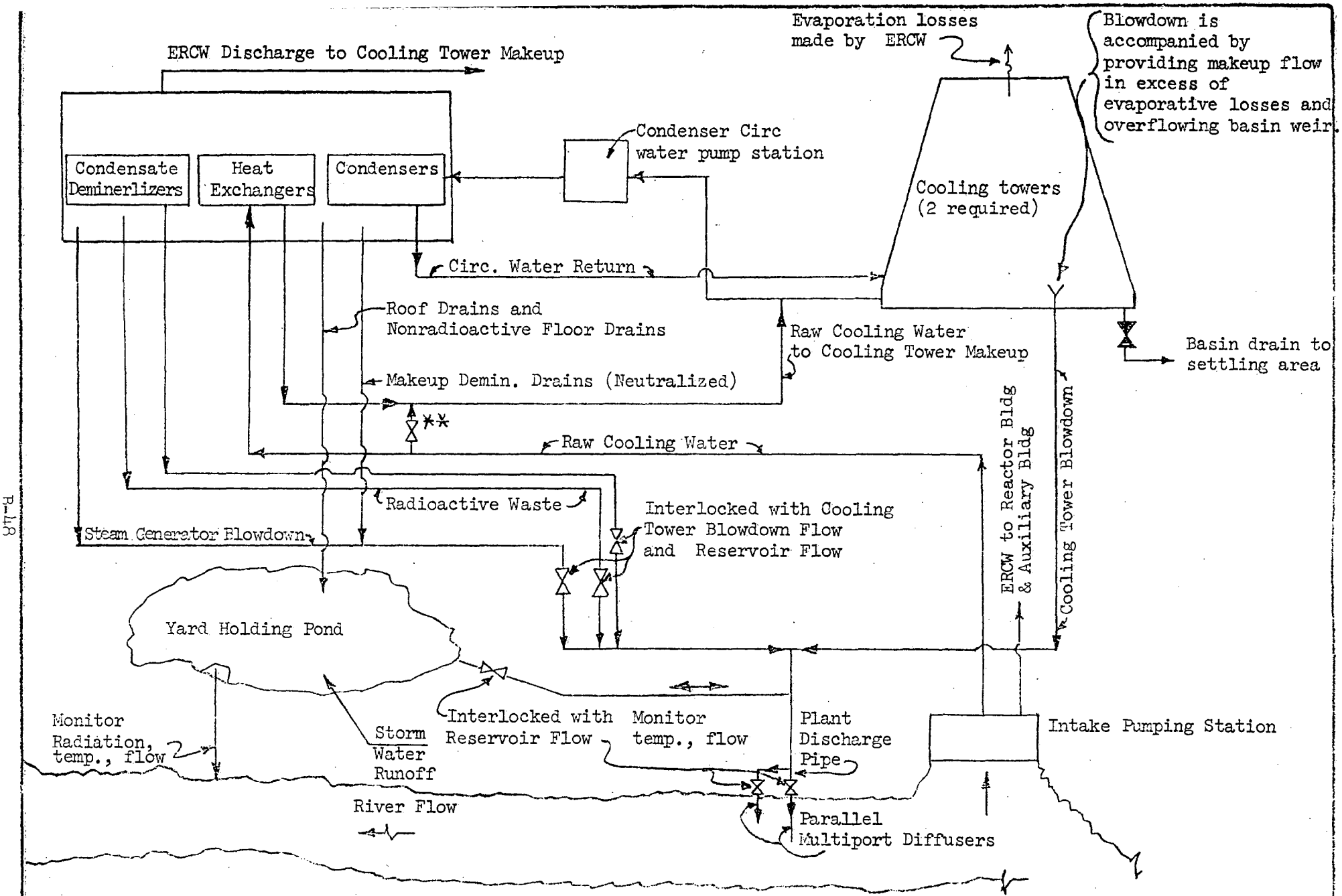

**Valve opens at time of low level in cold water basin for extra makeup.

FIGURE 2.5-1
FLOW DIAGRAM - DISCHARGE OF PLANT LIQUIDS
(REVISED)

SECTION C

AQUATIC BIOTA (NONFISH) DATA SUMMARY

WATTS BAR NUCLEAR PLANT

The preoperational aquatic biology (nonfish) monitoring program in the vicinity of Watts Bar Nuclear Plant was implemented in February 1973. The results of this monitoring program which are available as of September 1976 are summarized in this section. This summary contains additional information on the subject of subsection 1.1.3(9)(b) in TVA's "Final Environmental Statement - Watts Bar Nuclear Plant Units 1 and 2" dated November 9, 1972. The specific results included in this summary are as follows:

Phytoplankton	1973, 1974
Chlorophyll	1973, 1974, and 1975
Productivity	1973, 1974, and 1975
Benthos	1975
Mussels	1975 and 1976
Zooplankton	1973 and 1974
Periphyton (summer only)	1975

Additional samples have been collected, preserved, and are currently in various stages of processing in the laboratory including the following:

Plankton	1975 and 1976
Chlorophyll	1976
Productivity	1976
Benthos	1973, 1974, and 1975
Mussels	Current
Zooplankton	1975 and 1976
Periphyton (summer only)	1974

The results of the samples now in process along with those collected within the near future will be included in the preoperational monitoring report.

Also included at the end of this section is a summary of preoperational water quality and aquatic (nonfish) monitoring programs which have been implemented at Watts Bar Nuclear Plant. This program description incorporates the non-radiological portions of the monitoring program described in subsection 2.4

and the construction effects monitoring described in subsection 2.8 of the Watts Bar Nuclear Plant FES as well as those monitoring programs implemented for point-source discharges regulated under the FWPCA. In addition, the program description identifies the basis upon which the operational water quality and aquatic biology monitoring programs will be developed.

BIOLOGICAL ENVIRONMENTAL REVIEW

WATTS BAR NUCLEAR PLANT

I. Aquatic (Other Than Fish)

Biological samples for preoperational baseline data have been taken at seven locations on the Tennessee River since February 1973. These samples are taken quarterly each year (winter, spring, summer, and fall) at the following locations--TRM 496.5, 506.6, 518.0, 527.4, 528.0, 529.9 (Watts Bar Dam tailrace), and 532.1 (Watts Bar Reservoir forebay). Biological samples include phytoplankton, periphyton, zooplankton, and benthos. Sampling will continue as preoperational baseline monitoring and change to operational monitoring after initial criticality of the first unit.

The following baseline information has been compiled from biological data that have been analyzed.

A. Phytoplankton

1. Genera Diversity

a. Chrysophyta

The maximum number of Chrysophyta genera found were 13 different genera at TRM 528.0 during the winter of 1973 (table 1E). There were a minimum of three different genera at TRM 506.6 and 518.0 (tables 1B and 1C) during the fall of 1974. The diatom genera diversity was generally larger during the winter and spring of both years at all

stations (tables 1A-1E). More diatom genera were found upstream from TRM 496.5, reaching a maximum at TRM 529.9, but still high at TRM 532.1. Melosira, Navicula, Stephanodiscus, and Synedra were generally found at all stations during all seasons. Asterionella was found more frequently from TRM 527.4 to TRM 532.1 than below 527.4. Certain other genera were found more often at certain river miles as shown in tables 1A-1E.

b. Chlorophyta

There were a maximum of 21 different Chlorophyta genera found at TRM 528.0 during the summer of 1973 (table 2E). The minimum number of genera found was one genera at TRM 496.5 and TRM 532.1 during the winter of 1973 (tables 2A and 2G) and at TRM 506.6 during the fall of 1974 (table 2B). The green algae genera diversity was larger during the summer than other seasons, but spring and fall seasons showed a high diversity on occasion and at certain locations (tables 2A-2G). TRM 528.0 and TRM 532.1 are generally the dominant Chlorophyta stations according to genera diversity, with minimum genera found at TRM 506.6, and the other stations are similar. Chlamydomonas and Scenedesmus were generally found at all stations during all seasons.

c. Cyanophyta

A maximum of four different genera were found at TRM 527.4, 528.0, 529.9, and 532.1 during the summer of 1973 (tables 3D-3G). Each of the seven stations had only one genera present during at least three or more of the eight sampling trips during 1973 and 1974. The blue-green algae genera was more prevalent during the summer months than any other season, and genera numbers during the fall were more than winter and spring. Dactylacoccopsis was found at every station during every season during 1973 and 1974.

2. Group Composition and Enumeration

Table 4 shows the percent composition of Chrysophyta, Chlorophyta, and Cyanophyta cells. Chrysophyta cells were dominant at all stations in 1973 during winter, spring, and fall and at all stations during all seasons in 1974. Chlorophyta cells were dominant during the summer of 1973 at all stations except TRM 529.9 where Cyanophyta cells were dominant.

Table 4 also shows the numerical evaluation of each group. Over 1 million Chrysophyta cells/l were found on two occasions. During the spring of 1973 1,019,000 cells/l were found at TRM 532.1 and 1,126,000 cells/l were found at the same location during the spring of 1974. The minimum number of Chrysophyta cells found were 67,000/l and occurred at TRM 496.5 during the

winter of 1974. Over 1 million Chlorophyta cells/1 were also found on two occasions. At TRM 528.0 1,094,000 cells/1 were found, and 1,211,000 cells/1 were found at TRM 532.1 during the summer of 1973. The minimum number of Chlorophyta cells found were 2,000/1, and this occurred at TRM 532.1 during the winter of 1973. Over 1 million Cyanophyta cells/1 were found on only one occasion and this was during the summer of 1973 when 1,033,000 cells/1 were found at TRM 532.1. The minimum number of Cyanophyta cells/1 found were 1,000 cells/1 and this occurred at TRM 496.5 during the winter of 1974.

Generally, larger phytoplankton populations progressed upstream from TRM 496.5 with the largest population occurring in the forebay area at TRM 532.1. All numerical evaluations are rounded to the nearest 1,000/1. Some Englenophyta and Pyrophyta genera were found, but always less than 5 percent of the total algal composition and are not included in this report.

3. Chlorophyll a

Table 5 shows the concentrations of chlorophyll a extracted from the phytoplankton during the winter, spring, summer, and fall seasons of 1973, 1974, and 1975 at each station and are expressed as mg chl. a/m^2. This plant pigment content

measurement is used as a measure of phytoplankton standing stock to compliment the phytoplankton enumeration and productivity measurements.

Plant pigment biomass of the phytoplankton increased upstream from TRM 496.5 to TRM 532.1. During the fall of 1974 the concentrations of chlorophyll a were generally higher than any other season during 1973, 1974, and 1975. Minimum values were found during the spring of 1975. The lowest value of chlorophyll a was 2.62 mg chl. a/m^2 found at TRM 506.6 during the spring of 1975. The highest chlorophyll a concentration was 37.87 mg chl.a/m^2 and was found at TRM 532.1 during the fall of 1974.

4. Phytoplankton Productivity

Carbon-14 was used for measuring phytoplankton productivity. Productivity during the incubation period was extrapolated to the total per day based on a ratio of total incident light during the incubation period. Table 6 shows the phytoplankton productivity expressed as mg C/m^2/day at each station during 1973, 1974, and 1975. Physical factors such as solar radiation, secchi disc visibility depth, and water temperature are shown on this table.

Phytoplankton productivity generally increases upstream from TRM 496.5 with maximum productivity values occurring in the forebay area at TRM 532.1. Higher productivity values usually

occur during the summer months with the highest average value for all stations occurring during the summer of 1973 (1009 mg $C/m^2/day$). Lowest average value was 58 mg $C/m^2/day$ and occurred during the winter of 1975. The lowest single value was 9 mg $C/m^2/day$ at TRM 496.5 during the winter of 1975 and the highest single value was 1,590 mg $C/m^2/day$ at TRM 532.1 during the summer of 1973.

5. Phytoplankton Summary

All phytoplankton parameters (enumeration, composition, chlorophyll a, and productivity) exhibit a similar normal and healthy pattern for the mainstream Tennessee River. Seasonal variations of turbidity, temperature, and flow tend to vary these patterns depending on the severity and duration of these physical factors. The forebay area at TRM 532.1 is the most active for phytoplankton due to water retention time and clarity of the water. All phytoplankton activity increases progressively from TRM 496.5 to TRM 532.1. Minimal values are shown during the winter months, increasing in the spring, to a maximum in the summer, and usually tapering off in the fall season.

B. Periphyton

Periphyton organisms are communities of organisms which grow upon but do not penetrate into a submerged substrate. This includes but is not limited to bacteria, fungi, algae, protozoans, rotifers, and other small organisms.

1. Autotrophic Index

The biomass-chlorophyll a relationship, the autotrophic index, is used to evaluate various effects on the periphyton communities. Two quantities are necessary for the calculation of the autotrophic index (1) the ash free organic weight and (2) the concentration of chlorophyll a, thus using the following formula:

$$\frac{\text{Ash-free organic weight } (mg/m^2)}{\text{Chlorophyll } a \ (mg/m^2)} = \text{Autotrophic Index}$$

Smaller values of the index indicate that the periphyton community is having optimal growth. Larger numbers indicate that the community is experiencing some type of stress (turbidity, season, toxicity, etc.).

Artificial substrates (Plexiglas plates) are exposed during two periods each summer with each period having a 2-week colonization time. These periods are selected during the summer months which is the maximum periphyton growth period. Tables 7A and 7B show the autotrophic index average for each station and an analysis of variance of these means. During June of 1975 TRM 529.9 shows optimal autotrophic growth which was significantly different from only the growth at TRM 496.5. During August of 1975 the autotrophic growth is greatest at TRM 527.4 followed by good growth at TRM 529.9. TRM 527.4, 529.9, 528.0

and 506.6 are not significantly different during August. Healthy autotrophic growth of the periphyton community is shown during the summer of 1975 through the studied reach of the river.

C. Zooplankton

Zooplankton enumeration data for 1973 and 1974 are shown in tables 8-14, indicating species numbers for each station during the 2-year period. Also shown are percentage composition values for the three zooplankton groups (Rotatoria, Cladocera, and Copepoda) as they occurred in each season and year. In table 15, zooplankton enumerations are summarized by showing group totals and total numbers for each station and season. A yearly summary of zooplankton enumeration by groups is shown in table 16, supplying mean population numbers for 1973, 1974, and combined years. In tables 17-23 zooplankton taxa identified at each station are shown as they occurred throughout the sampling period.

The pattern of dominance for the zooplankton group Rotatoria was varied as numerous species of the genera Asplanchna, Brachionus, Conochiloides, Conochilus, Keratella, Ploesoma, Polyarthra, and Synchaeta comprised a major part of the rotifer population. The highest concentration of any one species occurred in the summer of 1973 at Tennessee River mile (TRM) 529.9 and 532.1 when Brachionus angularis reached densities of 110,309 organisms per cubic meter and 92,296 organisms per cubic meter, accounting for 45 percent and 35 percent of their respective rotifer populations. The highest single species concentration in 1974 occurred in the fall at TRM 532.1 when Keratella earlinae reached a density of 24,281 organisms per cubic meter (43

percent of the rotifer population). A high variability occurred between the 1973 and 1974 zooplankton standing crops and is best illustrated by noting that Brachionus angularis, which reached a 110,309 organism per cubic meter concentration in 1973, only appeared in concentrations reaching a maximum of 334 organisms per cubic meter in 1974 (99.7% reduction). Reductions occurred in the 1974 rotifer standing crop numbers for most species and are reflected in the total zooplankton enumerations (combined group numbers) at every sampling station.

The zooplankton group Cladocera was dominated by a single species, Bosmina longirostris, which reached a standing crop maximum of 74,732 organisms per cubic meter (96 percent of the Cladoceran standing crop) in the spring of 1973 at TRM 528.0. 1974 population numbers for the Cladocera were lower than those of 1973 for the winter, spring, and summer seasons, but higher in the fall.

Copepoda population numbers were dominated by the immature forms; i.e., Calanoid and Cyclopoid Copepodids and Nauplii. The total Copepod standing crop numbers for 1973 and 1974 were similar.

Total zooplankton numbers for the 2-year period ranged from a summer high of 344,437 organisms per cubic meter at TRM 532.1 (1973) to a fall low of 1,925 organisms per cubic meter at TRM 496.5 (1973). Tennessee River mile 532.1, Watts Bar Dam Reservoir forebay, produced the highest standing crop numbers for every season of 1973 and 1974 with the exceptions of the winter sampling period for both years at TRM 528.0 where population numbers were only slightly elevated above those of the forebay station.

Zooplankton standing crop numbers were larger in the spring and summer of 1973 and in the spring and fall of 1974. Population numbers for 1974 showed a combined station reduction of 60 percent below the 1973 population estimates. A similar reduction occurred at every station during 1974 and ranged from 23 percent at TRM 496.5 to 76 percent at TRM 518.0.

The largest number of taxa identified for Rotatoria, Cladocera, Copepoda, and combined groups occurred in the spring of 1974 at TRM 496.5 with 22, 11, 12, and 45 respectively. Eleven taxa of Cladocera were also identified in the spring of 1973 at TRM 506.6 and TRM 532.1. The smallest number of taxa identified for Rotatoria was 5 at TRM 506.6 and TRM 518.0 in fall of 1973. The smallest number of taxa identified for the Cladocera occurred at TRM 506.6 (winter 1973) when only Bosmina longirostris was encountered. The smallest number of taxa for combined groups was 19 and occurred at TRM 506.6 in the summer of 1974.

D. Benthos

1. Other Than Mussels

During the 1975 study period, benthic samples were collected from Chickamauga Reservoir in the vicinity of the Watts Bar Nuclear Plant. Artificial substrates were selected as the method for sampling the benthic fauna because of physical difficulties associated with the quantitative sampling of the natural substrate. Each artificial substrate was a cylinder-shaped barbeque basket filled with rocks and had a volume of 7,675.2 cm^3. Substrates were allowed to colonize for a period of 30 days. Tennessee River Mile (TRM) 518.0 and 527.4 were the only stations from which one or more substrate collections were made in every quarter

during 1975. Station TRM 528.0 was also included in this report since artificial substrates were recovered in every quarter with the exception of the fall quarter.

From these samples, 14 benthic macroinvertebrate taxa were identified (table 24). Insects were the most diverse group with seven taxa (three chironomid midges, one mayfly, and three caddisflies). Following the insects were aquatic worms (two taxa), crustaceans (two taxa), bryozoa, flatworms, and leaches (each with one taxon).

Macrobenthic species diversity data are shown in table 25. The greatest number (12) of taxa were collected at TRM 518.0 during 1975, while eight taxa were collected from both TRM 527.4 and 528.0. Species collected during the summer quarter at each river mile were the crayfish Orconectes sp., the midge Chironomus sp., the mayfly Stenonema sp., and the caddisfly Cyrnellus marginalis (BANKS). The caddisfly Cheumatopsyche sp. was found at each of the three stations during the spring quarter.

Macrobenthic enumeration data are shown in tables 26-28. The most organisms collected during 1975 were 42 organisms/substrate during the spring quarter from TRM 527.4. This station also yielded the greatest average number (33) of organisms per substrate.

The average number of organisms per substrate (seasons combined) were 15.3 and 16.1 for TRM 518.0 and 527.4, respectively. Station 528.0 was not included because data were not available for the fall quarter.

D. Benthos

2. Other Aquatic Forms

Freshwater Mussels--Historically there has been a large and diverse mussel fauna below Watts Bar Dam in the Tennessee River. Scruggs (1960) reported results of an extensive mussel study in the Tennessee River mile (TRM) area 498-519 below the Watts Bar Nuclear Plant site. Table 29 provides some population data from Scruggs' findings. Basically, his other data showed that mussels were being depleted by commercial harvest at a rate significantly higher than natural recruitment to the population. Isom (1969) found that mussel population around and downstream of the site area had declined significantly during the interim between Scruggs' studies (1956-1957) and the period of his study (1964), table 30. Isom (1969) showed the relationship between declining mussel harvest and increase in price given per ton of shells (figure 1). The graph illustrates a classic example of over exploitation. His data (table 31) showed that price paid for shells was essentially doubled for post 1960 years, while catch per boat declined as compared with earlier harvest during the period 1945-1959.

As a result of the latter study and recommendations, the Tennessee Game and Fish Commission issued proclamation no. 153 (1967) declaring "that area of the Tennessee River (Chickamauga

Reservoir) between the Rhea navigation light (River mile 526.3) and Watts Bar Dam" as sanctuaries, and musseling is prohibited.

Commercial harvesting in the area, immediately downstream of the sanctuary, has essentially ceased since the late 1960's, with the last official tonnage harvested reported in 1970. Reference was made to minor harvests in 1973 and 1974.

Presently, the mussel fauna below Watts Bar Dam is represented by at least 13 species (table 32). Virtually all of these species "prefer" a substrate of firm porous gravel or sand and gravel with a moderate to swift current. Based on findings of surveys, July and August 1975 and May and August 1976, the most suitable mussel habitat is on the left bank in the vicinity of TRM 520.5 to 521.3 and 527.6 to 528.5, variability was greater in the TRM 527.6 to 528.5 area. The numbers found per unit effort by SCUBA diving indicate the 520.5 to 521.5 has the greater population density. SCUBA efforts also revealed a good localized population in the TRM 527.7 area. Many mussels collected from the latter area were eroded and abraded while those from the TRM 520.8 vicinity were in excellent condition, especially the commercially valuable Pleurobema cordatum (pigtoe). The swift current in the upstream area may account for this difference in shell quality.

The mussel population at TRM 520.5 to 528.5 is apparently reproducing since animals as young as 5 years old were found.

While TVA does not consider any species found below Watts Bar Dam to be endangered or threatened, the U.S. Fish and Wildlife

Service declared Lampsilis orbiculata to be endangered in Federal Register, vol. 41, No. 115, June 14, 1976. The notice in the Federal Register indicates that this specie's known distribution range includes Green R., Kentucky; Kanawha River in West Virginia; Tennessee River (Tennessee and Alabama); Muskingum River, Ohio. Isom (1969) reported finding L. orbiculata from the Kentucky Dam tailwater all the way upstream to Watts Bar Dam tailwater.

The Asiatic clam (Corbicula manilensis) has become prominent in the benthos of the Tennessee River in the vicinity of the Watts Bar site during the past decade. Densities vary from a few individuals to hundreds per square meter, depending on type of substrate and water currents. Representative data taken in 1976 are shown in table 33.

Scruggs, G. D. Jr., 1960. Status of Freshwater Mussel Stocks in the Tennessee River. U.S. Fish and Wildlife Ser., Spec. Rpt., Fisheries No. 370:1-41.

Isom, Billy G. The Mussel Resource of the Tennessee River. Malocologia, 7(2-3):397-425.

Table 1A

Watts Bar Nuclear Plant - Phytoplankton Occurrence
TRM 496.5

	1973				1974			
	Winter	Spring	Summer	Fall	Winter	Spring	Summer	Fall
Chrysophyta								
Asterionella	x			x		x		
Cocconeis							x	x
Cyclotella	x			x		x		
Cymbella		x						
Diatoma					x			
Dinobryon		x	x			x	x	
Fragilaria		x						
Melosira	x	x	x	x	x	x	x	x
Navicula	x	x	x	x	x	x	x	x
Nitzschia				x				
Rhizosolenia		x	x				x	
Stephanodiscus		x		x	x			
Surirella					x			
Synedra	x	x	x	x	x	x	x	x
Tabellaria								x
Eunotia			x					
Mallomonas		x						
Total Genera	5	9	6	7	6	6	6	5

Table 1B

Watts Bar Nuclear Plant - Phytoplankton Occurrence
TRM 506.6

	1973				1974			
	Winter	Spring	Summer	Fall	Winter	Spring	Summer	Fall
Chrysophyta								
Achnanthes							x	
Asterionella	x	x			x	x		
Cyclotella	x							
Cymbella	x	x			x		x	
Dinobryon	x	x						
Fragilaria						x		
Melosira	x	x	x	x	x	x	x	x
Navicula	x	x	x	x		x	x	
Pinnularia	x							
Rhizosolenia			x					
Stephanodiscus	x	x		x	x	x	x	x
Surirella	x							
Synedra	x	x	x	x	x	x	x	x
Eunotia	x	x	x			x		
Mallomonas	x	x						
Chaetoceros				x	x			
Attheya							x	
Total Genera	12	9	5	5	6	7	7	3

Table 1C

Watts Bar Nuclear Plant - Phytoplankton Occurrence
TRM 518.0

	1973				1974			
	Winter	Spring	Summer	Fall	Winter	Spring	Summer	Fall
Chrysophyta								
Asterionella	x	x				x		
Cyclotella	x	x	x	x	x	x		
Cymbella	x	x				x		
Dinobryon	x		x				x	
Fragilaria						x	x	
Melosira	x	x	x	x	x	x	x	x
Navicula	x	x	x		x	x	x	x
Pleurosigma		x						
Rhizosolenia			x					
Stephanodiscus		x		x	x	x	x	
Surirella	x							
Synedra	x	x	x	x	x	x	x	x
Tabellaria					x			
Eunotia			x					
Mallomonas	x							
Chaetoceros			x					
Total Genera	9	8	8	4	6	8	6	3

Table 1D

Watts Bar Nuclear Plant - Phytoplankton Occurrence
TRM 527.4

	1973				1974			
	Winter	Spring	Summer	Fall	Winter	Spring	Summer	Fall
Chrysophyta								
Achnanthes								x
Asterionella	x	x			x	x	x	x
Cyclotella	x	x		x				x
Cymbella	x				x	x		
Diatoma		x			x			
Dinobryon	x	x				x		
Fragilaria						x		
Melosira	x	x	x	x	x	x	x	x
Navicula	x	x	x			x	x	
Pinnularia	x							
Rhizosolenia			x					
Stephanodiscus		x		x	x	x		
Surirella						x		
Synedra	x	x	x	x	x	x	x	x
Eunotia			x			x		
Meridion								
Rhiocosphenia								
Mallomonas	x	x				x		
Chaetoceros			x		x			
Total Genera	9	9	6	4	7	11	4	5

Table 1E

Watts Bar Nuclear Plant - Phytoplankton Occurrence
TRM 528.0

	1973				1974			
	Winter	Spring	Summer	Fall	Winter	Spring	Summer	Fall
Chrysophyta								
Achnanthes								x
Asterionella	x	x		x	x	x		x
Cyclotella	x			x	x	x		
Dinobryon	x	x				x		
Fragilaria	x	x				x		x
Gomphonema	x							
Melosira	x	x	x	x	x	x	x	x
Navicula	x	x	x	x	x	x	x	x
Pleurosigma	x							
Rhizosolenia			x					
Stephanodiscus	x	x				x	x	
Surirella	x							
Synedra	x	x	x		x	x	x	x
Tabellaria						x	x	
Eunotia	x		x					
Mallomonas	x	x						
Chaetoceros				x	x			
Total Genera	13	8	5	5	6	9	5	6

Table 1F

Watts Bar Nuclear Plant - Phytoplankton Occurrence
TRM 529.9

	1973				1974			
	Winter	Spring	Summer	Fall	Winter	Spring	Summer	Fall
Chrysophyta								
Asterionella	x	x		x		x	x	x
Cocconeis							x	x
Cyclotella	x	x		x		x		
Cymbella	x	x		x				
Diatoma								x
Dinobryon	x	x						
Fragilaria	x	x			x	x	x	
Gomphonema				x				
Gyrosigma		x						
Melosira	x	x	x	x	x	x	x	x
Navicula	x	x	x	x	x	x		x
Rhizosolenia		x	x					
Stephanodiscus	x	x	x	x	x	x		
Synedra	x	x	x	x	x	x	x	x
Eunotia			x					
Mallomonas	x							
Chaetoceros			x	x	x			
Total Genera	10	11	7	9	6	7	5	6

Table 1G

Watts Bar Nuclear Plant - Phytoplankton Occurrence
TRM 532.1

	1973				1974			
	Winter	Spring	Summer	Fall	Winter	Spring	Summer	Fall
Chrysophyta								
Achnanthes								x
Asterionella	x	x			x	x	x	x
Cocconeis						x		
Cyclotella	x	x	x	x				
Cymbella							x	
Diatoma		x						
Dinobryon	x					x	x	
Fragilaria		x	x			x	x	
Melosira	x	x	x	x	x	x	x	x
Navicula	x	x	x		x			x
Pleurosigma		x						
Rhizosolenia			x				x	
Stephanodiscus	x	x			x	x		x
Synedra	x	x	x	x	x	x	x	x
Tabellaria						x		
Eunotia			x					
Mallomonas	x	x						
Chaetoceros			x	x	x			x
Total Genera	8	10	8	4	6	8	7	7

Table 2A

Watts Bar Nuclear Plant - Phytoplankton Occurrence
TRM 496.5

	1973				1974			
	Winter	Spring	Summer	Fall	Winter	Spring	Summer	Fall
Chlorophyta								
Actinastrum		x				x	x	
Ankistrodesmus		x	x					
Chodatella						x	x	
Chlamydomonas		x	x	x	x	x	x	x
Chlorella			x			x	x	x
Coelastrum			x			x		
Crucigenia				x				
Dactylococcus					x			
Dictyosphaerium			x	x	x	x		
Eudorina							x	
Micractinium		x	x	x		x	x	
Pandorina		x	x					
Pediastrum			x	x		x	x	
Scenedesmus	x	x	x	x	x	x	x	x
Staurastrum			x					
Tetraspora			x			x		
Golenkinia			x			x		
Kirchneriella				x				
Ulothrix						x		
Oocystis						x	x	
Treubaria			x					
Planktosphaeria			x	x	x	x		
Schroederia							x	
Total Genera	1	6	14	8	5	14	10	3

Table 2B

Watts Bar Nuclear Plant - Phytoplankton Occurrence
TRM 506.6

	1973				1974			
	Winter	Spring	Summer	Fall	Winter	Spring	Summer	Fall
Chlorophyta								
Actinastrum		x	x					
Ankistrodesmus			x					
Chodatella							x	
Chlamydomonas	x	x	x	x	x	x	x	
Chlorella			x			x	x	x
Coelastrum			x				x	
Crucigenia			x					
Dictyosphaerium	x		x				x	
Micractinium			x	x				
Pandorina		x	x					
Pediastrum			x					
Scenedesmus	x	x	x	x	x	x	x	
Staurastrum			x					
Tetraspora	x	x						
Kirchneriella			x	x				
Ulothrix	x							
Oocystis	x					x		
Treubaria			x					
Planktosphaeria	x		x	x	x	x		
Total Genera	7	5	16	5	4	6	6	1

Table 2C

Watts Bar Nuclear Plant - Phytoplankton Occurrence
TRM 518.0

	1973				1974			
	Winter	Spring	Summer	Fall	Winter	Spring	Summer	Fall
Chlorophyta								
Actinastrum		x	x					
Ankistrodesmus			x	x				
Arthrodesmus								x
Chodatella								x
Chlamydomonas	x	x	x	x	x	x	x	
Chlorella			x			x	x	x
Coelastrum		x	x				x	
Crucigenia			x				x	
Dictyosphaerium	x		x	x				
Micractinium			x				x	
Pandorina		x	x			x		
Pediastrum			x					
Scenedesmus	x	x	x	x	x	x	x	x
Staurastrum			x					
Tetraspora	x		x	x				
Sphaerocystis						x		
Golenkinia			x	x		x		
Kirchneriella			x					
Ulothrix	x							
Oocystis	x							
Treubaria			x	x		x	x	
Planktosphaeria			x	x	x	x		
Pleodorina			x					
Schroederia							x	
Total Genera	6	5	18	8	3	8	8	4

Table 2D

Watts Bar Nuclear Plant - Phytoplankton Occurrence
TRM 527.4

	1973				1974			
	Winter	Spring	Summer	Fall	Winter	Spring	Summer	Fall
Chlorophyta								
Actinastrum		x	x	x				x
Ankistrodesmus			x					
Chodatella						x		x
Chlamydomonas	x		x	x	x	x	x	x
Chlorella			x			x	x	x
Coelastrum			x	x		x	x	
Crucigenia			x	x			x	
Dictyosphaerium	x		x	x			x	
Eudorina							x	
Micractinium			x					
Pandorina		x	x					
Pediastrum			x					x
Scenedesmus	x	x	x	x		x	x	x
Staurastrum			x					
Tetraspora						x		
Tetraedron							x	
Golenkinia			x	x	x			
Kirchneriella			x					
Ulothrix	x							
Oocystis	x						x	x
Treubaria			x					
Planktosphaeria			x	x	x	x		
Botryoccus			x					
Schroederia							x	
Total Genera	5	3	17	8	3	7	10	6

Table 2E

Watts Bar Nuclear Plant - Phytoplankton Occurrence
TRM 528.0

	1973				1974			
	Winter	Spring	Summer	Fall	Winter	Spring	Summer	Fall
Chlorophyta								
Actinastrum			x	x				
Ankistrodesmus		x	x					
Chodatella						x		x
Chlamydomonas	x	x	x	x	x		x	x
Chlorella			x			x	x	x
Coelastrum			x	x		x	x	x
Cosmarium		x						
Crucigenia			x				x	
Dictyosphaerium			x	x			x	
Eudorina			x				x	
Micractinium			x				x	
Pandorina		x	x			x	x	x
Pediastrum			x	x			x	
Scenedesmus	x	x	x	x		x	x	x
Staurastrum			x				x	
Tetraspora	x		x			x		
Sphaerocystis						x		
Golenkinia			x	x	x			
Kirchneriella			x					
Ulothrix	x							
Oocystis			x			x	x	x
Treubaria			x	x		x		
Planktosphaeria			x	x	x	x		
Pleodorina			x					
Botryococcus			x					
Platydorina							x	
Schroederia							x	
Total Genera	4	5	21	9	3	10	14	7

Table 2F

Watts Bar Nuclear Plant - Phytoplankton Occurrence
TRM 529.9

	1973				1974			
	Winter	Spring	Summer	Fall	Winter	Spring	Summer	Fall
Chlorophyta								
Actinastrum			x					
Ankistrodesmus			x	x				
Chodatella								x
Chlamydomonas	x	x	x	x	x	x	x	x
Chlorella			x			x	x	x
Coelastrum		x	x			x	x	
Crucigenia			x		x		x	
Dictyosphaerium	x				x			
Micractinium			x	x				
Pandorina		x	x			x	x	
Pediastrum			x	x				
Scenedesmus	x	x	x	x	x	x	x	x
Staurastrum			x				x	
Tetraspora	x	x	x	x		x		
Sphaerocystis							x	
Golenkinia			x	x	x			
Kirchneriella			x					
Ulothrix	x							
Oocystis						x	x	x
Treubaria			x					
Planktosphaeria			x	x	x			
Pleodorina			x					
Total Genera	5	5	17	8	6	7	9	5

Table 2G

Watts Bar Nuclear Plant - Phytoplankton Occurrence
TRM 532.1

	1973				1974			
	Winter	Spring	Summer	Fall	Winter	Spring	Summer	Fall
Chlorophyta								
Actinastrum			x	x				x
Ankistrodesmus			x					
Chodatella						x		x
Chlamydomonas	x	x	x	x	x	x	x	x
Chlorella			x			x	x	x
Coelastrum		x	x			x	x	
Crucigenia			x	x			x	
Dactylococcus					x	x		
Closteriopsis							x	
Dictyosphaerium			x	x			x	
Eudorina							x	
Micractinium			x				x	
Pandorina		x	x	x	x	x	x	
Pediastrum			x				x	
Scenedesmus		x	x	x	x	x	x	x
Staurastrum			x					
Tetraspora		x	x	x				
Sphaerocystis						x	x	
Gonium							x	
Golenkinia			x	x	x	x		
Kirchneriella			x	x				
Oocystis		x	x				x	
Treubaria			x	x				
Planktosphaeria			x	x	x	x		
Closterium						x		
Pleodorina			x					
Schroedoria							x	
Total Genera	1	6	19	11	6	11	15	5

Table 3A

Watts Bar Nuclear Plant - Phytoplankton Occurrence
TRM 496.5

	1973				1974			
	Winter	Spring	Summer	Fall	Winter	Spring	Summer	Fall
Cyanophyta								
Dactylococcopsis	x	x	x	x	x	x	x	x
Merismopedia			x				x	
Oscillatoria							x	x
Phormidium			x					
Total Genera	1	1	3	1	1	1	3	2

Table 3B

Watts Bar Nuclear Plant - Phytoplankton Occurrence
TRM 506.6

	1973				1974			
	Winter	Spring	Summer	Fall	Winter	Spring	Summer	Fall
Cyanophyta								
Dactylococcopsis	x	x	x	x	x	x	x	x
Merismopedia			x					
Oscillatoria							x	x
Phormidium			x					
Total Genera	1	1	3	1	1	1	2	2

Table 3C

Watts Bar Nuclear Plant - Phytoplankton Occurrence
TRM 518.0

	1973				1974			
	Winter	Spring	Summer	Fall	Winter	Spring	Summer	Fall
Cyanophyta								
Anabaena	x							
Dactylococcopsis	x	x	x	x	x	x	x	x
Merismopedia			x			x		
Oscillatoria							x	x
Phormidium			x					
Total Genera	2	1	3	1	1	2	2	2

Table 3D

Watts Bar Nuclear Plant - Phytoplankton Occurrence
TRM 527.4

	1973				1974			
	Winter	Spring	Summer	Fall	Winter	Spring	Summer	Fall
Cyanophyta								
Dactylococcopsis	x	x	x	x	x	x	x	x
Merismopedia			x					
Microcystis			x					
Oscillatoria							x	x
Phormidium			x					
Total Genera	1	1	4	1	1	1	2	2

Table 3E

Watts Bar Nuclear Plant - Phytoplankton Occurrence
TRM 528.0

	1973				1974			
	Winter	Spring	Summer	Fall	Winter	Spring	Summer	Fall
Cyanophyta								
Dactylococcopsis	x	x	x	x	x	x	x	x
Merismopedia			x			x		
Microcystis			x					
Oscillatoria							x	x
Phormidium			x					
Total Genera	1	1	4	1	1	2	2	2

Table 3F

Watts Bar Nuclear Plant - Phytoplankton Occurrence
TRM 529.9

	1973				1974			
	Winter	Spring	Summer	Fall	Winter	Spring	Summer	Fall
Cyanophyta								
Dactylococcopsis	x	x	x	x	x	x	x	x
Merismopedia			x					
Microcystis			x					
Oscillatoria							x	x
Phormidium			x					
Total Genera	1	1	4	1	1	1	2	2

Table 3G

Watts Bar Nuclear Plant - Phytoplankton Occurrence
TRM 532.1

	1973				1974			
	Winter	Spring	Summer	Fall	Winter	Spring	Summer	Fall
Cyanophyta								
Dactylococcopsis	x	x	x	x	x	x	x	x
Merismopedia			x				x	
Microcystis			x					
Oscillatoria								x
Phormidium			x					
Total Genera	1	1	4	1	1	1	2	2

Table 4

WATTS BAR NUCLEAR PLANT

PHYTOPLANKTON ENUMERATION AND PERCENTAGES

	1973								1974							
	Winter		Spring		Summer		Fall		Winter		Spring		Summer		Fall	
TRM	Avg. No./l	%	Avg. No./l	%	Avg. No./l	%	Avg. No./l	%	Avg. No./l	%	Avg. No./l	%	Avg. No./l	%	Avg. No/l	%
496.5																
Chrysophyta	560,000	(96)	410,000	(80)	207,000	(39)	119,000	(64)	67,000	(70)	348,000	(55)	130,000	(50)	85,000	(70)
Chlorophyta	5,000	(1)	77,000	(15)	252,000	(47)	61,000	(33)	28,000	(29)	247,000	(39)	101,000	(39)	32,000	(26)
Cyanophyta	18,000	(3)	27,000	(5)	76,000	(14)	7,000	(3)	1,000	(1)	35,000	(6)	29,000	(11)	4,000	(4)
Total	583,000		514,000		535,000		187,000		96,000		630,000		260,000		121,000	
506.6																
Chrysophyta	731,000	(71)	282,000	(84)	204,000	(23)	76,000	(60)	69,000	(70)	368,000	(78)	79,000	(54)	105,000	(81)
Chlorophyta	242,000	(24)	44,000	(13)	439,000	(51)	42,000	(33)	25,000	(25)	91,000	(19)	60,000	(41)	23,000	(18)
Cyanophyta	44,000	(5)	8,000	(3)	224,000	(26)	8,000	(7)	5,000	(5)	14,000	(3)	7,000	(5)	2,000	(1)
Total	1,022,000		334,000		867,000		126,000		99,000		473,000		146,000		130,000	
518.0																
Chrysophyta	749,000	(77)	426,000	(81)	523,000	(29)	135,000	(63)	90,000	(78)	466,000	(79)	108,000	(55)	224,000	(74)
Chlorophyta	177,000	(18)	74,000	(14)	781,000	(44)	65,000	(31)	23,000	(20)	76,000	(13)	85,000	(44)	65,000	(21)
Cyanophyta	43,000	(5)	25,000	(5)	483,000	(27)	13,000	(6)	2,000	(2)	48,000	(8)	2,000	(1)	14,000	(5)
Total	973,000		525,000		1,787,000		213,000		115,000		590,000		195,000		303,000	
527.4																
Chrysophyta	517,000	(84)	777,000	(93)	677,000	(31)	206,000	(60)	142,000	(84)	712,000	(83)	266,000	(56)	373,000	(73)
Chlorophyta	58,000	(10)	44,000	(6)	854,000	(39)	125,000	(36)	20,000	(12)	118,000	(14)	205,000	(43)	115,000	(23)
Cyanophyta	38,000	(6)	12,000	(2)	650,000	(30)	12,000	(4)	7,000	(4)	30,000	(3)	4,000	(1)	21,000	(4)
Total	613,000		833,000		2,181,000		343,000		169,000		860,000		475,000		509,000	
528.0																
Chrysophyta	624,000	(90)	613,000	(88)	823,000	(28)	277,000	(63)	219,000	(85)	778,000	(81)	394,000	(61)	407,000	(76)
Chlorophyta	47,000	(7)	70,000	(10)	1,094,000	(38)	151,000	(34)	26,000	(10)	145,000	(15)	251,000	(38)	111,000	(21)
Cyanophyta	20,000	(3)	14,000	(2)	998,000	(34)	13,000	(3)	12,000	(5)	41,000	(4)	2,000	(1)	14,000	(3)
Total	691,000		697,000		2,915,000		441,000		257,000		964,000		647,000		532,000	
529.9																
Chrysophyta	680,000	(83)	643,000	(89)	701,000	(28)	273,000	(61)	129,000	(75)	901,000	(81)	245,000	(70)	350,000	(79)
Chlorophyta	96,000	(12)	68,000	(9)	874,000	(35)	138,000	(31)	35,000	(20)	168,000	(15)	102,000	(29)	72,000	(16)
Cyanophyta	44,000	(5)	12,000	(2)	929,000	(37)	34,000	(8)	9,000	(5)	38,000	(4)	2,000	(1)	23,000	(5)
Total	820,000		723,000		2,504,000		445,000		173,000		1,107,000		349,000		445,000	
532.1																
Chrysophyta	423,000	(94)	1,019,000	(77)	941,000	(30)	328,000	(62)	133,000	(71)	1,126,000	(82)	712,000	(64)	400,000	(77)
Chlorophyta	2,000	(1)	279,000	(21)	1,211,000	(38)	168,000	(32)	44,000	(24)	233,000	(17)	389,000	(35)	92,000	(18)
Cyanophyta	24,000	(5)	33,000	(2)	1,033,000	(32)	29,000	(6)	9,000	(5)	21,000	(1)	16,000	(1)	25,000	(5)
Total	449,000		1,331,000		3,185,000		525,000		186,000		1,380,000		1,117,000		517,000	

Table 5

WATTS BAR NUCLEAR PLANT

CHLOROPHYLL A EXPRESSED IN mg Chl. A/m^2

	1973				1974				1975				Station
TRM	Winter	Spring	Summer	Fall	Winter	Spring	Summer	Fall	Winter	Spring	Summer	Fall	$\bar{x}$
496.5	-	4.06	3.04	6.76	1.69	14.02	5.80	7.86	9.06	4.27	-	8.57	6.51
506.6	13.69	2.30	19.01	10.05	10.16	6.00	3.28	15.60	11.13	2.62	9.19	3.33	8.86
518.0	16.63	6.39	19.92	7.02	10.95	9.93	9.80	27.02	15.04	4.26	9.22	4.89	11.76
527.4	18.85	9.58	20.97	11.57	16.08	13.65	15.39	35.24	14.38	6.19	11.15	10.46	15.29
528.0	16.46	11.10	18.01	18.72	12.68	19.36	17.63	36.79	10.90	5.25	10.22	11.34	15.70
524.9	16.52	10.18	31.45	15.59	9.89	17.90	14.27	34.05	16.05	2.80	10.37	12.89	16.00
532.1	15.91	26.87	-	17.82	12.10	32.26	37.00	37.87	12.24	7.68	26.03	23.64	22.67
Season $\bar{x}$	16.34	10.07	18.73	12.49	12.20	16.20	14.74	27.78	12.68	4.72	12.70	10.73	

Table 6

WATTS BAR NUCLEAR PLANT

PHYTOPLANKTON PRODUCTIVITY EXPRESSED IN mg C/day/m^2

TRM	1973 Winter	1973 Spring	1973 Summer	1973 Fall	1974 Winter	1974 Spring	1974 Summer	1974 Fall	1975 Winter	1975 Spring	1975 Summer	1975 Fall	Season $\bar{x}$
496.5	130	157	400	33	45	328	140	48	9	311	220	127	162
506.6	258	75	313	47	21	115	182	50	58	733	240	123	185
518.0	329	157	842	98	33	176	380	151	67	502	246	100	229
527.4	359	210	1488	159	36	313	575	242	73	588	290	361	391
528.0	322	214	1359	243	36	298	728	267	72	553	327	349	397
529.9	255	181	1074	241	28	229	498	261	59	253	268	391	311
532.1	375	558	1590	419	40	468	1356	322	71	211	1294	387	591
Season $\bar{x}$	290	222	1009	177	34	275	551	192	58	448	412	263	
Langleys/Day on Incubation Date	336	345	499	232	226	98	185	271	62	421	295	254	
Secchi Disc Visibility	1.10M	1.50M	1.50M	1.25M	0.80M	125M	2.40M	1.15M	0.55M	1.80M	1.75M	1.15M	
Water Temp. @ 1 Meter (°F)	44.3	67.7	77.7	58.2	46.8	66.3	78.1	59.6	47.3	65.0	81.2	63.8	

Table 7A

Watts Bar Periphyton Autotrophic Index
June 1975

Analysis of Variance

Source of Variation	Degrees of Freedom	Sum of Squares	Mean Squares	F-Value
Among Locations	5	28,808.76	5,761.75	F = 4.08**
Within Locations	30	42,356.56	1,411.89	F_{95} = 2.53 F_{99} = 3.70

** Highly Significant

The F-Value for testing the null hypothesis of station differences is highly significant (1% level). This is evidence that there are real differences among station means.

RANKING THE MEANS

TRM	529.9	527.4	528.0	506.6	518.0	496.5
Autotrophic Index	147.39	159.07	166.84	190.94	195.18	225.18

Any two means underscored by the same line are not significantly different. Any two means not underscored by the same line are significantly different by using Duncan's Multiple Range Test.

Table 7B

Watts Bar Periphyton Autotrophic Index
August 1975

Analysis of Variance

Source of Variation	Degrees of Freedom	Sum of Squares	Mean Squares	F-Value
Among Locations	5	155,301.88	31,060.38	F = 8.62**
Within Locations	38	136,857.97	3,601.53	F_{95} = 2.47 F_{99} = 3.55

** Highly Significant

The F-Value for testing the null hypothesis of station differences is highly significant (1% level). This is evidence that there are real differences among station means.

RANKING THE MEANS

TRM	527.4	529.9	528.0	506.6	496.5	518.0
Autotrophic Index	163.54	167.38	194.22	204.15	278.10	316.52

Any two means underscored by the same line are not significantly different. Any two means not underscored by the same line are significantly different by using Duncan's Multiple Range Test.

Table 8

Zooplankton Enumeration at Tennessee River Mile 496.5
(Chickamauga Reservoir) for the Sampling Period
Winter 1973 - Fall 1974 - Watts Bar Nuclear Plant

Organism	No. Organisms Per m^3 [a]							
	1973				1974			
	Wi	Sp	Su	Fa	Wi	Sp	Su	Fa
Rotatoria								
Asplanchna spp.		5,781	336	38	37	5,804	399	585
Brachionus angularis		264	2,957	11		263	185	55
Brachionus bidentata			17			178		
Brachionus budapestinensis			956			12	496	
Brachionus calyciflorus		991			6	2,037	65	33
Brachionus caudatus		26	16				43	
Brachionus quadridentatus		49				1,022	11	
Cephalodella sp.			17	6	9	24		
Collotheca pelagica		241		28	265	72		343
Conochiloides sp.			829	146	9	83	99	
Conochilus hippocrepis						36		
Conochilus unicornis		8,081	812	38	17	16,355	295	329
Euchlanis sp.		30				24		7
Filinia spp.		49			29			
Hexarthra spp.						12		
Hexarthra mira							66	
Kellicottia bostoniensis		26		6	14			
Keratella cochlearis		361	17	27	11	96		199
Keratella crassa		507	82	135	894	833	34	2,288
Keratella earlinae		2,056	65		6	381	197	274
Keratella valga				6				
Lecane spp.						12		
Lecane luna						12		
Ploesoma truncatum		72	274	6		1,096		118
Polyarthra spp.		1,366	32	22	309	345	217	286
Rotaria sp.				22	14			
Rotaria neptunia								7
Synchaeta stylata		1,537	49	141	1,940	618	154	167
Trichocerca spp.		98	17			154	22	13
Total Rotatoria		21,535	6,476	632	3,560	29,469	2,383	4,704
Percent Composition		44.3%	37.8%	32.8%	70.4%	65.9%	25.3%	48.0%
Cladocera								
Alona				1				
Bosmina longirostris		24,307	6,614	826	267	13,303	2,972	2,799
Ceriodaphnia (instar)			129					
Ceriodaphnia lacustris			33					
Ceriodaphnia quadrangula						1		
Chydorus spp.						13		
Daphnia (instar)		53	907	6	12	107		6
Daphnia galeata mendotae							3	
Daphnia parvula		2	33	1	10	2	23	58

NO SAMPLE TAKEN

Table 8 (Cont.)

Organism	No. Organisms Per m^3[a]							
	1973				1974			
	Wi	Sp	Su	Fa	Wi	Sp	Su	Fa
Cladocera (cont.)								
Daphnia pulex		1				2		
Daphnia retrocurva		2	162	11			466	6
Diaphanosoma leuchtenbergianum		27	356			119		7
Ilyocryptus spinifer				1				
Leptodora kindtii		2	32	2		15	17	1
Leydigia quadrangularis						1		
Moina micrura			17			1		
Sida crystallinia		1				2		
Simocephalus (instar)		1			1			
Total Cladocera		24,396	8,285	848	290	13,566	3,481	2,877
Percent Composition	NO SAMPLE TAKEN	50.2%	48.3%	44.1%	5.7%	30.3%	36.9%	29.3%
Copepoda								
Calanoida (copepodid)		5	97	1	60	29	185	20
Cyclopoida (copepodid)		312	856	114	188	321	152	428
Harpacticoida (copepodid)					1			
Nauplii		2,229	1,067	287	894	1,237	2,388	1,649
Cyclops bicuspidatus thomasi		49			57	60		
Cyclops varicans rubellus				2		1		
Cyclops vernalis		49	130	12		24	152	40
Diaptomus pallidus		3	97	11	6	24	274	32
Diaptomus reighardi		2					232	7
Diaptomus sanguineus		1				5		
Ergasilus spp.				6				
Eucyclops agilis						1		
Mesocyclops edax		1	113	11	1	1	173	48
Nitocra lacustris			16					
Paracyclops fimbriatus poppei						1		
Tropocyclops prasinus				1	2	1	1	
Total Copepoda		2,651	2,376	445	1,209	1,705	3,557	2,224
Percent Composition		5.5%	13.9%	23.1%	23.9%	3.8%	37.8%	22.7%
Total Zooplankton		48,582	17,137	1,925	5,059	44,740	9,421	9,805

[a] Values represent the mean of duplicate tows made from bottom to surface with a 1/2-meter net fitted with No. 20-mesh (80 um) bolting cloth.

Table 9

Zooplankton Enumeration at Tennessee River Mile 506.6
(Chickamauga Reservoir) for the Sampling Period
Winter 1973 - Fall 1974 - Watts Bar Nuclear Plant

	No. Organisms Per m^3 [a]							
	1973				1974			
Organism	Wi	Sp	Su	Fa	Wi	Sp	Su	Fa
Rotatoria								
Asplanchna spp.	35	333	1,169	6	73	26		34
Brachionus angularis		30	5,923	12				34
Brachionus bidentata		30	33			16		
Brachionus budapestinensis			656					33
Brachionus calyciflorus	138				7			
Brachionus caudatus			59	6				
Brachionus havanaensis							34	
Brachionus quadridentatus		30	52					17
Cephalodella sp.					3	26		
Collotheca pelagica	155	98	155	29	175	16		16
Conochiloides sp.			2,074					17
Conochilus unicornis		1,539	1,066	6	3	384		16
Euchlanis sp.			2		6			16
Filinia spp.	69				9			
Hexarthra spp.			33					
Kellicottia bostoniensis	190	30		6	28			
Keratella cochlearis	625	68	241	63	26		69	147
Keratella crassa	740	351	117	98	1,077		171	1,295
Keratella earlinae		1,781		139		2,158	17	1,603
Keratella quadrata	128				7			
Keratella valga				110				16
Notholca limnetica	18							
Ploesoma hudsoni								200
Ploesoma truncatum		68	1,116			206		
Polyarthra spp.	3,710	901	305	47	260	84	17	330
Rotaria sp.		30			3			
Synchaeta stylata	17,214	219	124	122	1,475	158		66
Testudinella sp.			33					
Trichocerca spp.		30	162	6				
Total Rotatoria	23,022	5,538	13,320	650	3,152	3,074	308	3,840
Percent Composition	90.9%	11.3%	42.5%	33.4%	64.5%	13.7%	4.2%	49.3%
Cladocera								
Bosmina longirostris	155	41,843	13,335	926	342	16,927	2,222	3,496
Ceriodaphnia (instar)			59					
Ceriodaphnia lacustris		1	91					
Ceriodaphnia quadrangula				1				
Chydorus spp.					1			
Daphnia (instar)		128	837	17	49	33	188	
Daphnia galeata mendotae							3	
Daphnia parvula		35	91	2	13	8	4	
Daphnia retrocurva		35	305	2		3	1,400	2

Table 9 (Cont.)

Organism	No. Organisms Per m^3 [a]							
	1973				1974			
	Wi	Sp	Su	Fa	Wi	Sp	Su	Fa
Cladocera (cont.)								
Diaphanosoma leuchtenbergianum		31	416	6		1	119	
Ilyocryptus spinifer			1					
Leptodora kindtii		32	65	2		8	154	2
Moina (instar)			52					
Sida crystallina		2	4					
Simocephalus (instar)		1						
Total Cladocera	155	42,108	15,256	956	405	16,980	4,090	3,500
Percent Composition	0.6%	85.7%	48.7%	49.2%	8.3%	75.5%	55.2%	44.9%
Copepoda								
Calanoida (copepodid)	18	34	4	2	46	412		
Cyclopoida (copepodid)	206	155	723	87	221	58	137	17
Harpacticoida (copepodid)			26		1			
Nauplii	1,794	386	1,603	212	1,014	1,086	905	232
Argulus stizostethi			2					
Cyclops bicuspidatus thomasi	69	330		1	32	816		
Cyclops varicans rubellus					4			
Cyclops vernalis	17	484	202	24		14	273	168
Diaptomus pallidus	18	72	59	1	6	8	683	16
Diaptomus reighardi		1				7	291	
Diaptomus sanguineus	17	1			1			
Eucyclops agilis	18				1			
Mesocyclops edax			157	12	1	27	718	18
Tropocyclops prasinus			2		2		2	
Total Copepoda	2,157	1,463	2,778	339	1,329	2,428	3,009	451
Percentage Composition	8.5%	3.0%	8.9%	17.4%	27.2%	10.8%	40.6%	5.8%
Total Zooplankton	25,334	49,109	31,354	1,945	4,886	22,482	7,407	7,791

a. Values represent the mean of duplicate tows made from bottom to surface with a 1/2-meter net fitted with No. 20-mesh (80 μm) bolting cloth.

Table 10

Zooplankton Enumeration at Tennessee River Mile 518.0
(Chickamauga Reservoir) for the Sampling Period
Winter 1973 - Fall 1974 - Watts Bar Nuclear Plant

	No. Organisms Per m^3 [a]							
	1973				1974			
Organism	Wi	Sp	Su	Fa	Wi	Sp	Su	Fa
otatoria								
Asplanchna spp.	52	233	11,726	15	70		24	147
Brachionus angularis		182	24,014	7		16		26
Brachionus budapestinensis			2,290					38
Brachionus calyciflorus	181		973		5			13
Brachionus caudatus							24	
Brachionus quadridentatus		51						
Brachionus urceolaris	48							
Cephalodella sp.			38		5			13
Collotheca pelagica	100	182	653	7	144			77
Conochiloides sp.			5,275		25			
Conochilus unicornis		8,359	2,387	14		421		79
Filinia spp.	85				3	127		
Kellicottia bostoniensis	191		19	7	14			
Keratella cochlearis	961	1,029	117	91	11		24	696
Keratella crassa	1,156	1,543	425	233	542		148	1,239
Keratella earlinae		6,396	19	125		2,821	48	4,942
Keratella quadrata	185				5			
Keratella valga				186				
Notholca spp.	15							
Ploesoma hudsoni								16
Ploesoma truncatum		27	7,576	22		142	41	102
Polyarthra spp.	5,300	6,666	992	155	104	299	81	1,340
Rotaria sp.					6			
Synchaeta stylata	16,895	927	1,093	276	1,188	49	17	595
Trichocerca spp.		282	196				50	
Total Rotifera	25,169	25,877	57,793	1,138	2,122	3,881	457	9,323
Percent Composition	92.7%	35.1%	82.6%	40.7%	63.8%	46.4%	2.6%	72.8%
Cladocera								
Alonella sp.					3			
Bosmina longirostris	195	43,893	6,599	1,127	202	3,864	6,339	3,077
Ceriodaphnia (instar)			20	7				
Ceriodaphnia lacustris			19					
Ceriodaphnia quadrangula				7				
Chydorus spp.	19				3			
Daphnia (instar)	19	1,187	632	14	19		145	
Daphnia galeata mendotae							124	
Daphnia parvula		155	39	1	6	3	130	1
Daphnia retrocurva		465	174	20		1	2,099	2
Diaphanosoma leuchtenbergianum		4	1,061	1		1	722	
Ilyocryptus spinifer			1					

Table 10 (Cont.)

Organism	No. Organisms Per m^3 [a]							
	1973				1974			
	Wi	Sp	Su	Fa	Wi	Sp	Su	Fa
Cladocera (cont.)								
Leptodora kindtii		35		1		6	169	3
Moina (instar)			230					
Sida crystallina		53						
Total Cladocera	233	45,792	8,775	1,178	233	3,875	9,728	3,083
Percent Composition	0.9%	62.1%	12.5%	42.1%	7.0%	46.3%	54.7%	24.1%
Copepoda								
Calanoida (copepodid)	33	129	59	3	44	3	678	16
Cyclopoida (copepodid)	191	157	1,005	155	190	33	366	
Harpacticoida (copepodid)					3			
Nauplii	1,428	721	1,935	233	666	442	3,114	289
Canthocamptus robertcokeri					3			
Cyclops bicuspidatus thomasi	33	155		7	54	112		
Cyclops varicans rubellus				7				
Cyclops vernalis		700	213	48		10	1,123	82
Diaptomus pallidus	15	97	21	3	6	4	1,035	2
Diaptomus reighardi	19	44	1	1		1	130	
Diaptomus sanguineus	15	12				3		
Ergasilus spp.			3					
Eucyclops agilis				7				
Mesocyclops edax	15	5	155	17	3	3	1,123	6
Paracyclops fimbriatus poppei							24	
Tropocyclops prasinus				1	2		4	
Total Copepoda	1,749	2,020	3,392	482	971	611	7,597	395
Percent Composition	6.4%	2.7%	4.8%	17.2%	29.2%	7.3%	42.7%	3.1%
Total Zooplankton	27,151	73,689	69,960	2,798	3,326	8,367	17,782	12,801

a. Values represent themean of duplicate tows made from bottom to surface with a 1/2-meter net fitted with No. 20-mesh (80 μm) bolting cloth.

Table 11

Zooplankton Enumeration at Tennessee River Mile 527.4
(Chickamauga Reservoir) for the Sampling Period
Winter 1973 - Fall 1974 - Watts Bar Nuclear Plant

Organism	No. Organisms Per m^3 [a]							
	1973				1974			
	Wi	Sp	Su	Fa	Wi	Sp	Su	Fa
Rotatoria								
Asplanchna spp.	122	346	12,383	19	190	135	157	290
Brachionus angularis		141	32,430			74		
Brachionus budapestinensis			4,021	4				40
Brachionus calyciflorus	291		30					105
Brachionus caudatus			8					
Brachionus quadridentatus			22					
Brachionus urceolaris	34							
Cephalodella sp.			25		7	11		
Collotheca pelagica		133	242	47	278	32		264
Conochiloides sp.			5,200		49			27
Conochilus hippocrepis								330
Conochilus unicornis		24,996	2,113	5		7,081		
Epiphanes macroura								53
Filinia spp.	157		43		14			
Hexarthra mira								13
Kellicottia bostoniensis	212		17	33	34	166		27
Keratella cochlearis	1,138	339	832	347	26			1,714
Keratella crassa	1,718	714	1,082	319	1,069	82	444	2,993
Keratella earlinae		6,752		375		3,670	59	11,129
Keratella quadrata	278				7			
Keratella valga				406				
Monostyla quadridentata			8					
Ploesoma hudsoni								145
Ploesoma truncatum		44	9,250	14		396		
Polyarthra spp.	9,879	18,012	877	108	401	1,434	862	1,780
Rotaria sp.					4			
Synchaeta stylata	17,863	1,986	303	145	1,862	205		79
Trichocerca spp.	34	44	169				79	
Trichotria pocillum	22							
Total Rotatoria	31,748	53,507	69,055	1,823	3,941	13,286	1,601	18,989
Percent Composition	88.2%	54.3%	79.5%	27.5%	64.4%	31.3%	7.5%	69.2%
Cladocera								
Alonella sp.					3			
Bosmina longirostris	379	39,626	6,502	2,827	345	26,071	2,438	6,237
Ceriodaphnia (instar)			178	5				
Ceriodaphnia lacustris			23				72	
Ceriodaphnia quadrangula				10				
Daphnia (instar)	90	1,066	1,134	207	43	32	118	
Daphnia ambigua						11		
Daphnia galeata mendotae							101	
Daphnia parvula		228	38	50	11	103	196	81
Daphnia pulex		52						

Table 11 (Cont.)

Organism	No. Organisms Per m^3 [a]							
	1973				1974			
	Wi	Sp	Su	Fa	Wi	Sp	Su	Fa
Cladocera (cont.)								
Daphnia retrocurva		192	275	83		72	3,478	241
Diaphanosoma leuchtenbergianum		10	2,185	10	4	8	2,064	2
Ilyocryptus spinifer			1					
Leptodora kindtii		54	30	5		332	98	10
Moina micrura			84				20	
Total Cladocera	469	41,228	10,450	3,197	406	26,629	8,585	6,571
Percent Composition	1.3%	41.8%	12.0%	48.2%	6.6%	62.6%	40.0%	23.9%
Copepoda								
Calanoid (copepodid)	22	147	16k	67	40	46	1,353	79
Cyclopoid (copepodid)	579	787	1,697	590	285	260	340	145
Harpacticoid (copepodid)			22					
Nauplii	2,924	2,332	5,123	608	1,359	1,903	7,520	1,095
Canthocamptus staphylinoides				5	11			
Cyclops bicuspidatus thomasi	100	141		29	64	270		1
Cyclops vernalis	56	339	122	125		66	412	317
Diaptomus pallidus	56	49	4	68	7	6	843	94
Diaptomus reighardi	34	9	9			36	39	1
Diaptomus sanguineus		11				5		
Ergasilus sp.			22	5				
Eucyclops prionophorus								14
Mesocyclops edax		7	176	115		3	752	132
Nitocra lacustris							20	
Tropocyclops prasinus					5			
Total Copepoda	3,771	3,822	7,336	1,612	1,771	2,595	11,279	1,878
Percent Composition	10.5%	3.9%	8.4%	24.3%	28.9%	6.1%	52.5%	6.8%
Total Zooplankton	33,988	98,557	86,841	6,632	6,118	42,510	21,465	27,438

a. Values represent the mean of duplicate tows made from bottom to surface with a 1/2-meter net fitted with No. 20-mesh (80 μm) bolting cloth.

Table 12

Zooplankton Enumeration at Tennessee River Mile 528.0
(Chickamauga Reservoir) for the Sampling Period
Winter 1973 - Fall 1974 - Watts Bar Nuclear Plant

	No. Organisms Per m^3 [a]							
	1973				1974			
Organism	Wi	Sp	Su	Fa	Wi	Sp	Su	Fa
Rotatoria								
Asplanchna spp.	91	1,405	19,526	57	81	341	202	273
Brachionus angularis		156	56,908				22	73
Brachionus budapestinensis			5,383	12				89
Brachionus calyciflorus	64	44	111	9	4	17		
Brachionus caudatus			34					
Brachionus urceolaris	64							
Cephalodella sp.					3			
Collotheca pelagica	64	741	289	203	181			376
Conochiloides sp.			9,823	37	18			78
Conochilus hippocrepis								292
Conochilus unicornis		28,849	3,846	9	4	8,999		
Filinia spp.	123	44	34		6			
Kellicottia bostoniensis	558	88	60	44	9	62		37
Keratella cochlearis	782	2,261	1,127	631	22			1,787
Keratella crassa	791	1,879	1,960	623	1,038	1,077	164	2,187
Keratella earlinae		14,952	26	661		8,842	197	16,207
Keratella quadrata	155				7			
Keratella valga				722				
Monostyla spp.							22	
Notholca sp.	32							
Ploesoma hudsoni								188
Ploesoma truncatum		44	15,950	77	4	876	44	
Polyarthra spp.	7,889	50,710	2,264	373	164	2,585	1,062	371
Synchaeta stylata	11,834	3,913	1,340	350	1,235	325	88	162
Trichocerca spp.		204	365			23	159	
Total Rotatoria	22,447	105,290	119,346	3,808	2,776	23,147	1,960	22,120
Percent Composition	81.7%	54.7%	78.2%	32.0%	62.8%	26.0%	6.3%	63.3%
Cladocera								
Alona quadrangularis		68			4			
Bosmina longirostris	400	74,732	11,215	4,575	313	55,848	2,001	8,062
Ceriodaphnia (instar)			179					
Ceriodaphnia lacustris			187				19	1
Ceriodaphnia quadrangula				9				
Chydorus spp.					6			
Daphnia (instar)	32	2,663	2,922	451	35	47	495	
Daphnia ambigua		1						
Daphnia galeata mendotae							545	
Daphnia parvula	91	179	153	48	9	440	241	40
Daphnia retrocurva		112	1,104	110	1	33	8,652	125
Diaphanosoma leuchtenbergianum		74	4,472	10		11	2,269	38

Table 12 (Cont.)

Organism	No. Organisms Per m^e [a]							
	1973				1974			
	Wi	Sp	Su	Fa	Wi	Sp	Su	Fa
Cladocera (cont.)								
Leptodora kindtii		77	61	20			214	75
Moina (instar)			646			1,206		
Sida crystallina						1		
Simocephalus (instar)				1				
Simocephalus vetulus		1						
Total Cladocera	523	77,907	20,939	5,224	368	57,586	14,436	8,341
Percent Composition	1.9%	40.5%	13.7%	43.9%	8.3%	64.6%	46.0%	23.9%
Copepoda								
Calanoida (copepodid)	32	112	222	87	18	493	1,411	198
Cyclopoida (copepodid)	795	1,899	3,418	1,022	185	809	545	99
Harpacticoida (copepodid)			34					
Nauplii	3,370	5,836	7,713	1,290	1,016	5,564	7,387	3,100
Cantrocamptus staphylinoides					1			
Canthocamptus robertcokeri								3
Cyclops bicuspidatus thomasi	123	494		92	29	852		54
Cyclops varicans rubellus					1			
Cyclops vernalis		712	349	150		214	1,340	480
Diaptomus pallidus		73	41	65	12	21	2,523	324
Diaptomus reighardi	32	49		2		210	423	38
Diaptomus sanguineus		5			1	113		
Ergasilus spp.			28	1		132		
Eucyclops agilis					4			
Eucyclops prionophorus	59							1
Mesocyclops edax	91	44	433	147	3	13	1,329	209
Tropocyclops prasinus					3			
Total Copepoda	4,502	9,224	12,238	2,856	1,273	8,421	14,958	4,506
Percent Composition	16.4%	4.8%	8.0%	24.0%	28.8%	9.4%	47.7%	12.9%
Total Zooplankton	27,472	192,421	152,523	11,888	4,417	89,154	31,354	34,967

a. Values represent the mean of duplicate tows made from bottom to surface with a 1/2-meter net fitted with No. 20-mesh (80 μm) bolting cloth.

Table 13

Zooplankton Enumeration at Tennessee River Mile 529.9
(Chickamauga Reservoir) for the Sampling Period
Winter 1973 - Fall 1974 - Watts Bar Nuclear Plant

	No. Organisms Per m^3 [a]							
	1973				1974			
Organism	Wi	Sp	Su	Fa	Wi	Sp	Su	Fa
Rotatoria								
Asplanchna spp.	67	1,078	30,538	126	80	271	76	827
Brachionus angularis		201	110,309			18		39
Brachionus budapestinensis			16,030			18		151
Brachionus calyciflorus	130		413		4			114
Cephalodella sp.					5			
Collotheca pelagica		986	2,162	255	170	41		811
Conochiloides sp.			13,049		12			
Conochilus unicornis		14,853	12,157	32	5	3,834		1,155
Filinia spp.	84	60			8			
Kellicottia bostoniensis	104	201	234	79	12	71		112
Keratella cochlearis	837	1,671	2,682	975	19			5,040
Keratella crassa	577	1,671	3,809	879	862	171	94	4,869
Keratella earlinae		11,307		1,211		5,758	187	22,790
Keratella quadrata	42				5			
Keratella valga	21			1,292				78
Platyias patulus			56					
Ploesoma hudsoni								110
Ploesoma truncatum		60	43,430	78			95	350
Polyarthra spp.	2,747	35,668	6,130	492	152	2,122	939	7,651
Rotaria sp.					5			
Synchaeta stylata	6,634	3,282	2,076	748	1,260	206	57	621
Trichocerca spp.		191	1,571	16			207	39
Total Rotatoria	11,243	71,229	244,646	6,183	2,599	12,510	1,655	45,747
Percent Composition	85.1%	47.8%	78.1%	33.7%	68.5%	22.1%	6.2%	63.4%
Cladocera								
Alona (instar)				16				
Alona quadrangularis					1			
Bosmina longirostris	181	58,510	21,020	4,146	156	37,208	1,901	14,765
Ceriodaphnia (instar)			468					
Ceriodaphnia lacustris			179					37
Ceriodaphnia quadrangula				48				
Ceriodaphnia reticulata								1
Daphnia (instar)		4,772	4,506	332	28	41	130	
Daphnia galeata mendatae							6	
Daphnia parvula	21	201	181	32	5	77	94	925
Daphnia retrocurva		594	1,671	111		41	3,829	485
Diaphanosoma leuchtenbergianum		8	10,858	32		4	2,731	3
Leptodora kindtii		15	91	32		106	206	25
Moina (instar)			1,424					
Moina micrura							1	
Sida crystallina		3						
Total Cladocera	202	64,103	40,398	4,749	190	37,477	8,898	16,241
Percent Composition	1.5%	43.1%	12.9%	25.9%	5.0%	66.3%	33.5%	22.5%

Table 13 (Cont.)

Organism	No. Organisms Per m^3 [a]							
	1973				1974			
	Wi	Sp	Su	Fa	Wi	Sp	Su	Fa
Copepoda								
Calanoida (copepodid)		523	224	78	14	214	1,214	420
Cyclopoida (copepodid)	234	3,470	5,836	2,770	125	649	543	1,334
Nauplii	1,338	8,093	21,103	3,873	849	5,042	10,191	6,882
Argulus stizostethi								1
Canthocamptus staphylinoides				1	1			
Canthocamptus robertcokeri								2
Cyclops bicuspidatus thomasi	67	473		221	6	378		270
Cyclops varicans rubellus					2			
Cyclops vernalis	26	887	413	335		106	563	770
Diaptomus pallidus	21	14	45	47	4	1	1,579	260
Diaptomus reighardi	21	5		2		53	281	41
Diaptomus sanguineus		13				38		
Ergasilus spp.			1					1
Eucyclops agilis	26							
Eucyclops prionophorus								1
Mesocyclops edax	26	74	734	110		73	1,671	226
Tropocyclops prasinus					2		4	
Total Copepoda	1,759	13,552	28,356	7,437	1,003	6,554	16,046	10,208
Percent Composition	13.3%	9.1%	9.0%	40.5%	26.5%	11.6%	60.3%	14.1%

a. Values represent the mean of duplicate tows made from bottom to surface with a 1/2-meter net fitted with No. 20-mesh (80 μm) bolting cloth.

Table 14

Zooplankton Enumeration at Tennessee River Mile 532.1
(Watts Bar Reservoir) for the Sampling Period
Winter 1973 - Fall 1974 - Watts Bar Nuclear Plant

	No. Organisms Per m^3 [a]							
	1973				1974			
Organism	Wi	Sp	Su	Fa	Wi	Sp	Su	Fa
Rotatoria								
Asplanchna spp.	35	23,949	56,865	1,045	104	1,368	1,433	2,818
Brachionus angularis		103	92,296				334	81
Brachionus budapestinensis			9,705	18			79	
Brachionus calyciflorus	133		156		11			271
Brachionus caudatus			57					
Brachionus quadridentatus		38	50					27
Brachionus urceolaris	35							
Cephalodella sp.					2			
Collotheca pelagica		542	1,056	261	227	92		1,571
Conochiloides sp.		27	19,101	129	33			
Conochilus unicornis		19,594	19,923	121	11	22,965	355	1,139
Epiphanes macroura					2			
Euchlanis sp.					4			
Filinia spp.	126	27			2			
Hexarthra spp.			453	45				
Hexarthra mira							1,731	
Kellicottia bostoniensis	126	27	57	95	26	17		135
Kellicottia longispina						17		
Keratella cochlearis	1,101	1,247	5,355	2,803	89		198	8,694
Keratella crassa	1,513	1,042	3,401	1,029	964	384	450	5,590
Keratella earlinae		11,528		2,797		12,505	2,089	24,281
Keratella quadrata	85				2			
Keratella valga				1,154				108
Lecane stokesii					2			
Monostyla spp.					2			
Notholca sp.	29							
Platyias patulus			100					
Ploesoma hudsoni							60	
Ploesoma truncatum		193	41,335	315		1,898	98	136
Polyarthra sp.	4,476	72,925	4,974	3,144	118	6,688	12,274	9,295
Rotaria sp.					6			
Synchaeta stylata	18,041	8,304	9,283	6,127	2,135	374	1,629	2,197
Trichocerca spp.		103	978	22	2	38	255	27
Total Rotatoria	25,700	139,649	265,145	19,105	3,742	46,346	20,985	56,370
Percent Composition	82.1%	77.6%	77.0%	47.1%	71.3%	38.1%	35.7%	57.1%
Cladocera								
Bosmina longirostris	623	68,285	25,278	7,647	294	54,666	533	21,216
Ceriodaphnia (instar)			100					
Ceriodaphnia lacustris			8				20	54
Ceriodaphnia quadrangula				40				
Daphnia (instar)		12,565	3,713	744	40		512	
Daphnia ambigua		54				87		
Daphnia galeata mendatae							454	
Daphnia parvula	63	425	3	40	8	1,917	380	1,543

Table 14 (Cont.)

Organism	No. Organisms Per m^3 [a]							
	1973				1974			
	Wi	Sp	Su	Fa	Wi	Sp	Su	Fa
Cladocera (cont.)								
Daphnia retrocurva		1,349	1,792	121		377	8,157	569
Diaphanosoma leuchtenbergianum		205	18,937	121	2	496	8,890	162
Ilyocryptus spinifer			106	22				
Latona setifera			1					
Leptora kindtii		103	270	40			356	32
Moina (instar)			1,651					
Moina micrura							20	
Scapholebris kingi				22		342		
Sida crystallina		8						
Simocephalus (instar)								27
Total Cladocera	686	14,709	51,859	8,797	344	57,385	19,322	23,603
Percent Composition	2.2%	8.2%	15.1%	21.7%	6.6%	47.2%	32.9%	23.9%
Copepoda								
Calanoida (copepodid)	91	697	383	210	43	294	592	541
Cyclopoid (copepodid)	1,077	9,733	7,679	3,794	167	4,461	1,001	3,957
Nauplii	3,533	13,126	18,202	8,278	921	11,679	15,158	12,382
Argulus stizostethi			1					
Canthocamptus staphylinoides					1			
Cyclops bicuspidatus thomasi	91	383		40	10	514		54
Cyclops vernalis		1,357	161	192		113	337	1,329
Diaptomus mississippiensis				1				
Diaptomus pallidus	63	103	17	40	15	50	474	216
Diaptomus reighardi	29	103		1		575	98	54
Diaptomus sanguineus	35	21			1	34		
Ergasilus spp.			57	1				
Eucyclops agilis					1			
Mesocyclops edax		65	858	63	2	88	829	189
Tropocyclops prasinus		38	57		3		2	
Total Copepoda	4,919	25,626	27,433	12,620	1,164	17,808	18,491	18,722
Percent Composition	15.7%	14.2%	8.0%	31.1%	22.2%	14.7%	31.4%	19.0%
Total Zooplankton	31,305	179,984	344,437	40,522	5,250	121,539	58,798	98,695

a. Values represent the mean of duplicate tows made from bottom to surface with a 1/2-meter net fitted with No. 20-mesh (80 μm) bolting cloth.

Table 15

Zooplankton Enumeration by Groups for the Sampling Period
Winter 1973 - Fall 1974 - Watts Bar Nuclear Plant

		No Organisms Per m^3							
		1973				1974			
Station	Group	Wi	Sp	Su	Fa	Wi	Sp	Su	Fa
TRM 496.5	Rotatoria		21,535	6,476	632	3,560	29,469	2,383	4,704
	Cladocera	*[a]	24,396	8,285	848	290	13,566	3,481	2,877
	Copepoda		2,651	2,376	445	1,209	1,705	3,557	2,224
	Total		48,582	17,137	1,925	5,059	44,740	9,421	9,805
TRM 506.6	Rotatoria	23,022	5,538	13,320	650	3,152	3,074	308	3,840
	Cladocera	155	42,108	15,256	956	405	16,980	4,090	3,500
	Copepoda	2,157	1,463	2,778	339	1,329	2,428	3,009	451
	Total	25,334	49,109	31,354	1,945	4,886	22,482	7,407	7,791
TRM 518.0	Rotatoria	25,169	25,877	57,793	1,138	2,122	3,881	457	9,323
	Cladocera	233	45,792	8,775	1,178	233	3,875	9,728	3,083
	Copepoda	1,749	2,020	3,392	482	971	611	7,597	395
	Total	27,151	73,689	69,960	2,798	3,326	8,367	17,782	12,801
TRM 527.4	Rotatoria	31,748	53,507	69,055	1,823	3,941	13,286	1,601	18,989
	Cladocera	469	41,228	10,450	3,197	406	26,629	8,585	6,571
	Copepoda	3,771	3,822	7,336	1,612	1,771	2,595	11,279	1,878
	Total	35,988	98,557	86,841	6,632	6,118	42,510	21,465	27,438
TRM 528.0	Rotatoria	22,447	105,290	119,346	3,808	2,776	23,147	1,960	22,120
	Cladocera	523	77,907	20,939	5,224	368	57,586	14,436	8,341
	Copepoda	4,502	9,224	12,238	2,856	1,273	8,421	14,958	4,506
	Total	27,472	192,421	152,523	11,888	4,417	89,154	31,354	34,967
TRM 529.9	Rotatoria	11,243	71,229	244,646	6,183	2,599	12,510	1,655	45,747
	Cladocera	202	64,103	40,398	4,749	190	37,477	8,898	16,241
	Copepoda	1,759	13,552	28,356	7,437	1,003	6,554	16,046	10,208
	Total	13,204	148,884	313,400	18,369	3,792	56,541	26,599	72,196
TRM 532.1	Rotatoria	25,700	139,649	265,145	19,105	3,742	46,346	20,985	56,370
	Cladocera	686	14,709	51,859	8,797	344	57,385	19,322	23,603
	Copepoda	4,919	25,626	27,433	12,620	1,164	17,808	18,491	18,722
	Total	31,305	179,984	344,437	40,522	5,250	121,539	58,798	98,695
Combined Stations	Rotatoria	23,222	60,375	110,826	4,763	3,127	18,816	4,193	23,013
	Cladocera	378	44,320	22,280	3,564	319	30,500	9.791	9,174
	Copepoda	3,143	8,337	11,987	3,684	1,246	5,732	10,705	5,483
	Total	26,743	113,032	145,093	12,011	4,692	55,048	24,689	37,670

a. No samples collected.

Table 16

Yearly Summary of Zooplankton by Groups for the Sampling Period
Winter 1973 - Fall 1974 - Watts Bar Nuclear Plant

Station	Group	No. Organisms Per m^3 1973	1974	Combined Years
TRM 496.5	Rotatoria	9,548[a]	10,029	9,823[a]
	Cladocera	11,176[a]	5,054	7,678[a]
	Copepoda	1,824[a]	2,174	2,024[a]
	Total	22,548[a]	17,257	19,525[a]
TRM 506.6	Rotatoria	10,633	2,594	6,613
	Cladocera	14,619	6,244	10,431
	Copepoda	1,684	1,804	1,744
	Total	26,936	10,642	18,788
TRM 518.0	Rotatoria	27,494	3,946	15,720
	Cladocera	13,995	4,230	9,112
	Copepoda	1,911	2,394	2,152
	Total	43,400	10,570	26,984
TRM 577.4	Rotatoria	39,033	9,454	24,244
	Cladocera	13,836	10,548	12,192
	Copepoda	4,135	4,381	4,258
	Total	57,004	24,383	40,694
TRM 528.0	Rotatoria	62,723	12,501	37,612
	Cladocera	26,148	20,183	23,166
	Copepoda	7,205	7,290	7,247
	Total	96,076	39,974	68,025
TRM 529.9	Rotatoria	83,325	15,628	49,477
	Cladocera	27,363	15,702	21,532
	Copepoda	12,776	8,453	10,614
	Total	123,464	39,783	81,623
TRM 531.2	Rotatoria	112,400	31,861	72,130
	Cladocera	19,013	25,164	22,088
	Copepoda	17,650	14,046	15,848
	Total	149,063	71,071	110,066
Combined Stations	Rotatoria	50,781[a]	12,288	31,187[a]
	Cladocera	18,386[a]	12,446	15,362[a]
	Copepoda	6,923[a]	5,792	6,347[a]
	Total	76,090[a]	30,526	52,896[a]

a. Winter 1973 values unavailable and not included where indicated.

Table 17

Zooplankton Taxa Identified at Tennessee River Mile 496.5
(Chickamauga Reservoir) for the Sampling Period
Winter 1973 - Fall 1974 - Watts Bar Nuclear Plant

Organism	1973				1974			
	Wi	Sp	Su	Fa	Wi	Sp	Su	Fa
Rotatoria								
Asplanchna spp.		x	x	x	x	x	x	x
Brachionus angularis		x	x	x		x	x	x
Brachionus bidentata			x			x		
Brachionus budapestinensis			x			x	x	
Brachionus calyciflorus		x			x	x	x	x
Brachionus candatus		x					x	
Brachionus quadridentatus		x				x	x	
Cephalodella sp.			x	x	x	x		
Collotheca pelagica		x		x	x	x		x
Conochiloides sp.			x	x	x	x	x	
Conochilus hippocrepis						x		
Conochilus unicornis		x	x	x	x	x	x	x
Euchlanis sp.		x				x		
Filinia spp.		x			x			
Hexarthra spp.						x		
Hexarthra mira							x	
Kellicottia bostoniensis		x		x	x			
Keratella cochlearis		x	x	x	x	x		x
Keratella crassa		x	x	x	x	x	x	x
Keratella earlinae		x	x		x	x	x	x
Keratella valga				x				
Lecane luna						x		
Ploesoma truncatum		x	x	x		x		x
Polyarthra spp.		x	x	x	x	x	x	x
Rotaria sp.				x	x			
Rotaria neptunia								x
Synchaeta stylata		x	x	x	x	x	x	x
Trichocerca spp.		x	x			x	x	x
Total Rotatoria		17	15	14	14	22	14	14
Cladocera								
Alona				x				
Bosmina longirostris		x	x	x	x	x	x	x
Ceriodaphnia (instar)			x					
Ceriodaphnia lacustris			x					
Ceriodaphnia quadrangula						x		
Chydorus spp.						x		
Daphnia (instar)		x	x	x	x	x		x
Daphnia galeata mendotae							x	
Daphnia parvula		x	x	x	x	x	x	x
Daphnia pulex		x				x		
Daphnia retrocurva		x	x	x			x	x

Table 17 (Cont.)

Organism	1973 Wi	1973 Sp	1973 Su	1973 Fa	1974 Wi	1974 Sp	1974 Su	1974 Fa
Cladocera (cont.)								
Diaphanosoma leuchtenbergianum		x	x			x		x
Ilyocryptus spinifer				x				
Leptodora kindtii		x	x	x		x	x	x
Leydigia quadrangularis			x			x		
Moina micrura			x			x		
Sida crystallinia		x				x		
Simocephalus (instar)		x			x			
Total Cladocera		9	9	7	4	11	5	6
Copepoda								
Calanoida (copepodid)		x	x	x	x	x	x	x
Cyclopoida (copepodid)		x	x	x	x	x	x	x
Harpacticoida (copepodid)					x			
Nauplii		x	x	x	x	x	x	x
Cyclops bicuspidatus thomasi		x			x	x		
Cyclops varicans rubellus								
Cyclops vernalis		x	x	x		x	x	x
Diaptomus pallidus		x	x	x	x	x	x	x
Diaptomus reighardi		x					x	x
Diaptomus sanguineus		x				x		
Ergasilus spp.				x				
Eucyclops agilis						x		
Mesocyclops edax		x	x	x	x	x	x	x
Nitocra lacustris			x					
Paracyclops fimbriatus poppei						x		
Tropocyclops prasinus				x	x	x	x	
Total Copepoda		9	7	9	8	12	8	7
Total Zooplankton		35	31	30	26	45	27	27

Table 18

Zooplankton Taxa Idntified at Tennessee River Mile 506.6
(Chickamauga Reservoir) for the Sampling Period
Winter 1973 - Fall 1974 - Watts Bar Nuclear Plant

Organism	1973				1974			
	Wi	Sp	Su	Fa	Wi	Sp	Su	Fa
Rotatoria								
Asplanchna spp.	x	x	x	x	x	x		x
Brachionus angularis		x	x	x				x
Brachionus bidentata		x	x			x		
Brachionus budapestinensis			x					x
Brachionus calyciflorus	x				x			
Brachionus caudatus			x	x				
Brachionus havanaensis							x	
Brachionus quadridentatus		x	x					x
Cephalodella sp.					x	x		
Collotheca pelagica	x	x	x	x	x	x		x
Conochiloides sp.			x					x
Conochilus unicornis		x	x	x	x	x		x
Euchlanis sp.			x		x			x
Filinia spp.	x				x			
Hexarthra spp.			x					
Kellicottia bostoniensis	x	x		x	x			
Keratella cochlearis	x	x	x	x	x		x	x
Keratella crassa	x	x	x	x	x		x	x
Keratella earlinae		x		x		x	x	x
Keratella quadrata	x				x			
Keratella valga				x				x
Notholca limnetica	x							
Ploesoma hudsoni								x
Ploesoma truncatum		x	x			x		
Polyarthra spp.	x	x	x	x	x	x	x	x
Rotaria sp.		x			x			
Synchaeta stylata	x	x	x	x	x	x		x
Testudinella sp.			x					
Trichocerca spp.		x	x	x				
Total Rotatoria	11	15	18	13	14	9	5	15
Cladocera								
Bosmina longirostris	x	x	x	x	x	x	x	x
Ceriodaphnia (instar)			x					
Ceriodaphnia lacustris		x	x					
Ceriodaphnia quadrangula				x				
Chydorus spp.					x			
Daphnia (instar)		x	x	x	x	x	x	
Daphnia galeata mendotae							x	
Daphnia parvula		x	x	x	x	x	x	
Daphnia retrocurva		x	x	x		x	x	x
Diaphanosoma leuchtenbergianum		x	x	x		x	x	
Ilyocryptus spinifer			x					

Table 18 (Cont.)

Organism	1973 Wi	1973 Sp	1973 Su	1973 Fa	1974 Wi	1974 Sp	1974 Su	1974 Fa
Leptodora kindtii		x	x	x		x	x	x
Moina (instar)			x					
Sida crystallina		x	x					
Simocephalus (instar)		x						
Total Cladocera	1	9	11	7	4	6	7	3
Copepoda								
Calanoida (copepodid)	x	x	x	x	x	x		
Cyclopoida (copepodid)	x	x	x	x	x	x	x	x
Harpacticoida (copepodid)			x		x			
Nauplii	x	x	x	x	x	x	x	x
Argulus stizostethi			x					
Cyclops bicuspidatus thomasi	x	x		x	x	x		
Cyclops varicans rubellus					x			
Cyclops vernalis	x	x	x	x		x	x	x
Diaptomus pallidus	x	x	x	x	x	x	x	x
Diaptomus reighardi		x				x	x	
Diaptomus sanguineus	x	x			x			
Eucyclops agilis	x				x			
Mesocyclops edax			x	x	x	x	x	x
Tropocyclops prasinus			x		x		x	
Total Copepoda	8	8	9	7	11	8	7	5
Total Zooplankton	20	32	38	27	29	23	19	23

Table 19

Zooplankton Taxa Identified at Tennessee River Mile 518.0
(Chickamauga Reservoir) for the Sampling Period
Winter 1973 - Fall 1974 - Watts Bar Nuclear Plant

Organism	1973				1974			
	Wi	Sp	Su	Fa	Wi	Sp	Su	Fa
Rotatoria								
Asplanchna spp.	x	x	x	x	x		x	x
Brachionus angularis		x	x	x		x		x
Brachionus budapestinensis			x					x
Brachionus calyciflorus	x		x		x			x
Brachionus caudatus							x	
Brachionus quadridentatus		x						
Brachionus urceolaris	x							
Cephalodella sp.			x		x			x
Collotheca pelagica	x	x	x	x	x			x
Conochiloides sp.			x		x			
Conochilus unicornis		x	x	x		x		x
Filinia spp.	x				x	x		
Kellicottia Bostoniensis	x		x	x	x			
Keratella cochlearis	x	x	x	x	x		x	x
Keratella earlinae		x	x	x		x	x	x
Keratella quadrata	x				x			
Keratella valga				x				
Notholca sp.	x							
Ploesoma hudsoni								x
Ploesoma truncatum		x	x	x		x	x	x
Polyarthra spp.	x	x	x	x	x	x	x	x
Rotaria sp.					x			
Synchaeta stylata	x	x	x	x	x	x	x	x
Trichocerca spp.		x	x				x	
Total Rotifera	12	12	16	12	13	7	9	14
Cladocera								
Alonella sp.					x			
Bosmina longirostris	x	x	x	x	x	x	x	x
Ceriodaphnia (instar)			x	x				
Ceriodaphnia lacustris			x					
Ceriodaphnia quadrangula				x				
Chydorus spp.					x			
Daphnia (instar)	x	x	x	x	x		x	
Daphnia galeata mendotae							x	
Daphnia parvula		x	x	x	x	x	x	x
Daphnia retrocurva		x	x	x		x	x	x
Diaphanosoma leuchtenbergianum		x	x	x		x	x	
Ilyocryptus spinifer			x					
Leptodora kindtii		x		x		x	x	x
Moina (instar)			x					
Sida crystallina		x						
Total Cladocera	3	7	9	8	5	5	7	4

Table 19 (Cont.)

Organism	1973				1974			
	Wi	Sp	Su	Fa	Wi	Sp	Su	Fa
Copepoda								
Calanoida (copepodid	x	x	x	x	x	x	x	x
Cyclopoida (copepodid)	x	x	x	x	x	x	x	
Harpacticoida (copepodid)					x			
Nauplii	x	x	x	x	x	x	x	x
Cantrocamptus robertcokeri					x			
Cyclops bicuspidatus thomasi	x	x		x	x	x		
Cyclops varicans rubellus				x				
Cyclops vernalis		x	x	x		x	x	x
Diaptomus pallidus	x	x	x	x	x	x	x	x
Diaptomus reighardi	x	x	x	x		x	x	
Diaptomus sanguineus	x	x				x		
Ergasilus spp.			x					
Eucyclops agilis				x				
Mesocyclops edax	x	x	x	x	x	x	x	x
Paracyclops fimbriatus poppei							x	
Tropocyclops prasinus				x	x		x	
Total Copepoda	8	9	8	11	9	9	9	5
Total Zooplankton	23	28	33	31	27	21	25	23

Table 20

Zooplankton Taxa Identified at Tennessee River Mile 527.4
(Chickamauga Reservoir) for the Sampling Period
Winter 1973 - Fall 1974 - Watts Bar Nuclear Plant

Organism	1973				1974			
	Wi	Sp	Su	Fa	Wi	Sp	Su	Fa
Rotatoria								
Asplanchna spp.	x	x	x	x	x	x	x	x
Brachionus angularis		x	x			x		
Brachionus budapestinensis			x	x				
Brachionus calyciflorus	x		x					
Brachionus caudatus			x					
Brachionus quadridentatus			x					
Brachionus urceolaris	x							
Cephalodella sp.			x		x	x		
Collotheca pelagica		x	x	x	x	x		x
Conochiloides sp.			x		x			x
Conochilus hippocrepis								x
Conochilus unicornis		x	x	x		x		
Epiphanes macroura								x
Filinia spp.	x		x		x			
Hexarthra mira								x
Kellicottia bostoniensis	x		x	x	x	x		x
Keratella cochlearis	x	x	x	x	x			x
Keratella crassa	x	x	x	x	x	x	x	x
Keratella earlinae		x		x		x	x	x
Keratella quadrata	x				x			
Keratella valga				x				
Monostyla quadridentata			x					
Ploesoma hudsoni								x
Ploesoma truncatum		x	x	x		x		
Polyarthra spp.	x	x	x	x	x	x	x	x
Rotaria Sp.					x			
Synchaeta stylata	x	x	x	x	x	x		x
Trichocerca spp.	x	x	x				x	
Trichotria pocillum	x							
Total Rotatoria	12	11	19	12	12	11	5	13
Cladocera								
Alonella sp.					x			
Bosmina longirostris	x	x	x	x	x	x	x	x
Ceriodaphnis (instar			x	x				
Ceriodaphnia lacustris			x				x	
Ceriodaphnia quadrangula				x				
Daphnia (instar)	x	x	x	x	x	x	x	
Daphnia ambigua						x		
Daphnia galeata mendotae							x	
Daphnia parvula		x	x	x	x	x	x	x
Daphnia pulex		x						

Table 20 (Cont.)

Organism	Wi	Sp	Su	Fa	Wi	Sp	Su	Fa
Cladocera (cont.)								
Daphnia retrocurva		x	x	x		x	x	x
Diaphanosoma leuchtenbergianum		x	x	x	x	x	x	x
Ilyocryptus spinifer			x					
Leptodora kindtii		x	x	x		x	x	x
Moina micrura			x				x	
Total Cladocera	2	7	10	8	5	7	9	5
Copepoda								
Calanoida (copepodid)	x	x	x	x	x	x	x	x
Cyclopoida (copepodid)	x	x	x	x	x	x	x	x
Harpacticoida (copepodid)			x					
Nauplii	x	x	x	x	x	x	x	x
Cantrocamptus staphylinoides				x	x			
Cyclops bicuspidatus thomasi	x	x		x	x	x		x
Cyclops vernalis	x	x	x	x		x	x	x
Diaptomus pallidus	x	x	x	x	x	x	x	x
Diaptomus reighardi	x	x	x			x	x	x
Diaptomus sanguineus		x				x		
Ergasilus spp.			x	x				
Eucyclops prionophorus								x
Mesocyclops edax		x	x	x		x	x	x
Nitocra lacustris							x	
Tropocyclops prasinus					x			
Total Copepoda	7	9	9	9	7	9	8	9
Total Zooplankton	21	27	38	29	24	27	22	27

Table 21

Zooplankton Taxa Identified at Tennessee River Mile 528.0
(Chickamauga Reservoir) for the Sampling Period
Winter 1973 - Fall 1974 - Watts Bar Nuclear Plant

Organism	1973				1974			
	Wi	Sp	Su	Fa	Wi	Sp	Su	Fa
Rotatoria								
Asplanchna spp.	x	x	x	x	x	x	x	x
Brachionus angularis		x	x				x	x
Brachionus budapestinensis			x	x				x
Brachionus calyciflorus	x	x	x	x	x	x		
Brachionus caudatus			x					
Brachionus urceolaris	x							
Cephalodella sp.					x			
Collotheca pelagica	x	x	x	x	x			x
Conochiloides sp.			x	x	x			x
Conochilus hippocrepis								x
Conochilus unicornis		x	x	x	x	x		
Filinia spp.	x	x	x		x			
Kellicottia bostoniensis	x	x	x	x	x	x		x
Keratella cochlearis	x	x	x	x	x			x
Keratella crassa	x	x	x	x	x	x	x	x
Keratella earlinae		x	x	x		x	x	x
Keratella quadrata	x				x			
Keratella valga				x				
Monostyla spp.							x	
Notholca sp.	x							
Ploesoma hudsoni								x
Ploesoma truncatum		x	x	x	x	x	x	
Polyarthra spp.	x	x	x	x	x	x	x	x
Synchaeta stylata	x	x	x	x	x	x	x	x
Trichocerca spp.		x	x			x	x	
Total Rotatoria	12	14	17	14	14	10	9	13
Cladocera								
Alona quadrangularis		x			x			
Bosmina longirostris	x	x	x	x	x	x	x	x
Ceriodaphnia (instar)			x					
Ceriodaphnia lacustris			x				x	x
Ceriodaphnia quadrangula				x				
Chydorus spp.					x			
Daphnia (instar)	x	x	x	x	x	x	x	
Daphnia ambigua		x						
Daphnia galeata mendotae							x	
Daphnia parvula	x	x	x	x	x	x	x	x
Daphnia retrocurva		x	x	x	x	x	x	x
Diaphanosoma leuchtenbergianum		x	x	x		x	x	x
Leptodora kindtii		x	x	x			x	x
Moina (instar)			x			x		

Table 21 (Cont.)

Organism	1973 Wi	1973 Sp	1973 Su	1973 Fa	1974 Wi	1974 Sp	1974 Su	1974 Fa
Cladocera (cont.)								
Sida crystallina						x		
Simocephalus (instar)				x				
Simocephalus vetulus		x						
Total Cladocera	3	9	9	8	6	7	8	6
Copepoda								
Calanoida (copepodid)	x	x	x	x	x	x	x	x
Cyclopoida (copepodid)	x	x	x	x	x	x	x	x
Harpacticoida (copepodid)			x					
Nauplii	x	x	x	x	x	x	x	x
Cantrocamptus staphylinoides					x			
Canthocamptus robertcokeri								x
Cyclops bicuspidatus thomasi	x	x		x	x	x		x
Cyclops varicans rubellus					x			
Cyclops vernalis		x	x	x		x	x	x
Diaptomus pallidus		x	x	x	x	x	x	x
Diaptomus reighardi	x	x		x		x	x	x
Diaptomus sanguineus		x			x	x		
Ergasilus spp.			x	x		x		
Eucyclops agilis					x			
Eucyclops prionophorus	x							x
Mesocyclops edax	x	x	x	x	x	x	x	x
Tropocyclops prasinus					x			
Total Copepoda	7	9	8	9	11	10	7	10
Total Zooplankton	22	32	34	31	31	27	24	29

Table 22

Zooplankton Taxa Identified at Tennessee River Mile 529.9
(Chickamauga Reservoir) for the Sampling Period
Winter 1973 - Fall 1974 - Watts Bar Nuclear Plant

Organism	1973				1974			
	Wi	Sp	Su	Fa	Wi	Sp	Su	Fa
Rotatoria								
Asplanchna spp.	x	x	x	x	x	x	x	x
Brachionus angularis		x	x			x		x
Brachionus budapestinensis			x			x		x
Brachionus calyciflorus	x		x		x			x
Cephalodella sp.					x			
Collotheca pelagica		x	x	x	x	x		x
Conochiloides sp.			x		x			
Conochilus unicornis		x	x	x	x	x		x
Filinia spp.	x	x			x			
Kellicottia bostoniensis	x	x	x	x	x	x		x
Keratella cochlearis	x	x	x	x	x			x
Keratella crassa	x	x	x	x	x	x	x	x
Kerotella earlinae		x		x		x	x	x
Keratella quadrata	x				x			
Keratella valga	x			x				x
Platyias patulus			x					
Ploesoma hudsoni								x
Ploesoma truncatum		x	x	x			x	x
Polyarthra spp.	x	x	x	x	x	x	x	x
Rotaria sp.					x			
Synchaeta stylata	x	x	x	x	x	x	x	x
Trichoerca spp.		x	x	x			x	x
Total Rotatoria	10	13	15	12	14	10	7	16
Cladocera								
Alona (instar)				x				
Alona quadrangularis					x			
Bosmina longirostris	x	x	x	x	x	x	x	x
Ceriodaphnia (instar)			x					
Ceriodaphnia lacustris			x					x
Ceriodaphnia quadrangula				x				
Ceriodaphnia reticulata								x
Daphnia (instar)		x	x	x	x	x	x	
Daphnia galeata mendatae							x	
Daphnia parvula	x	x	x	x	x	x	x	x
Daphnia retrocurva		x	x	x		x	x	x
Diaphanosoma leuchtenbergianum		x	x	x		x	x	x
Leptodora kindtii		x	x	x		x	x	x
Moina (instar)			x					

Table 22 (Cont.)

Organism	1973 Wi	1973 Sp	1973 Su	1973 Fa	1974 Wi	1974 Sp	1974 Su	1974 Fa
Cladocera (cont.)								
Moina micrura							x	
Sida crystallina		x						
Total Cladocera	2	7	9	8	4	6	8	7
Copepoda								
Calanoida (copepodid)		x	x	x	x	x	x	x
Cyclopoida (copepodid)	x	x	x	x	x	x	x	x
Nauplii	x	x	x	x	x	x	x	x
Argulus stizostethi								x
Canthocamptus staphylinoides				x	x			
Canthocamptus robertcokeri								
Cyclops bicuspidatus thomasi	x	x		x	x	x		x
Cyclops varicans rubellus					x			
Cyclops vernalis	x	x	x	x		x	x	x
Diaptomus pallidus	x	x	x	x	x	x	x	x
Diaptomus reighardi	x	x		x		x	x	x
Diaptomus sanguineus		x				x		
Ergasilus spp.			x					x
Eucyclops agilis	x							
Eucyclops prionophorus								x
Mesocyclops edax	x	x	x	x		x	x	x
Tropocyclops prasinus					x		x	
Total Copepoda	8	9	7	9	8	9	8	12
Total Zooplankton	20	29	31	29	26	25	23	35

Table 23

Zooplankton Taxa Identified at Tennessee River Mile 532.1
(Watts Bar Reservoir) for the Sampling Period
Winter 1973 - Fall 1974 - Watts Bar Nuclear Plant

Organism	1973				1974			
	Wi	Sp	Su	Fa	Wi	Sp	Su	Fa
Rotatoria								
Asplanchna spp.	x	x	x	x	x	x	x	x
Brachionus angularis		x	x				x	x
Brachionus budapestinensis			x	x			x	
Brachionus calyciflorus	x		x		x			x
Brachionus caudatus			x					
Brachionus quadridentatus		x	x					x
Brachionus urceolaris	x							
Cephalodella sp.					x			
Collotheca pelagica		x	x	x	x	x		x
Conochiloides sp.		x	x	x	x			
Conochilus unicornis		x	x	x	x	x	x	x
Epiphanes macroura					x			
Euchlanis sp.					x			
Filinia spp.	x	x			x			
Hexarthra spp.			x	x				
Hexarthra mira							x	
Kellicottia bostoniensis	x	x	x	x	x	x		x
Kellicottia longispina						x		
Keratella cochlearis	x	x	x	x	x		x	x
Keratella crassa	x	x	x	x	x	x	x	x
Keratella earlinae		x		x		x	x	x
Keratella quadrata	x				x			
Keratella valga				x				x
Lecane stokesii					x			
Monostyla spp.					x			
Notholca sp.	x							
Platyias patulus			x					
Ploesoma hudsoni							x	
Ploesoma truncatum		x	x	x		x	x	x
Polyarthra sp.	x	x	x	x	x	x	x	x
Rotaria sp.					x			
Synchaeta stylata	x	x	x	x	x	x	x	x
Trichocerca spp.		x	x	x	x	x	x	x
Total Rotatoria	11	15	18	15	19	11	13	15
Cladocera								
Bosmina longirostris	x	x	x	x	x	x	x	x
Ceriodaphnia (instar)			x					
Ceriodaphnia laucustris			x				x	x
Ceriodaphnia quadrangula				x				
Daphnia (instar)		x	x	x	x		x	
Daphnia ambigua		x				x		
Daphnia galeata mendatae							x	
Daphnia parvula	x	x	x	x	x	x	x	x

Table 23 (Cont.)

Organism	1973 Wi	1973 Sp	1973 Su	1973 Fa	1974 Wi	1974 Sp	1974 Su	1974 Fa
Cladocera (cont.)								
Daphnia retrocurva		x	x	x		x	x	x
Diaphanosoma leuchtenbergianum		x	x	x	x	x	x	x
Ilyocryptus spinifer			x	x				
Latora setifera			x					
Leptodora kindtii		x	x	x			x	x
Moina (instar)			x					
Moina micrura							x	
Scapholebris kingi				x		x		
Sida crystallina		x						
Simocephalus (instar)								x
Total Cladocera	2	8	11	9	4	6	9	7
Copepoda								
Calanoida (copepodid)	x	x	x	x	x	x	x	x
Cyclopoid (copepodid)	x	x	x	x	x	x	x	x
Nauplii	x	x	x	x	x	x	x	x
Argulus stizostethi			x					
Canthocamptus staphylinoides					x			
Cyclops bicuspidatus thomasi	x	x		x	x	x		x
Cyclops vernalis		x	x	x		x	x	x
Diaptomus mississippiensis				x				
Diaptomus pallidus	x	x	x	x	x	x	x	x
Diaptomus reighardi	x	x		x		x	x	x
Diaptomus sanguineus	x	x			x	x		
Ergasilus spp.			x	x				
Eucyclops agilis					x			
Mesocyclops edax		x	x	x	x	x	x	x
Tropocyclops prasinus		x	x		x		x	
Total Copepoda	7	10	9	10	10	9	8	8
Total Zooplankton	20	33	38	34	33	26	30	30

Table 24

Benthic Macroinvertebrate Fauna
Watts Bar Nuclear Plant - 1975

Annelida
- Clitellata (oligochaetes)
  - Tubificidae
    - *Branchiura sowerbyi* Beddard (1)
    - *Limnodrilus claparedeianus* Ratzel (2)
- Hirudinea (leeches) (3)

Arthropoda
- Crustacea
  - Amphipoda (scuds)
    - Gammaridae
      - *Gammarus* sp. (4)
  - Decapoda (crayfish)
    - Astacidae
      - *Orconectes* sp. (5)
- Insecta
  - Diptera
    - Chironomidae (midges)
      - *Chironomus* sp. (6)
      - *Orthocladius* sp. (7)
      - *Parachironomus* sp. (8)
  - Ephemeroptera (mayflies)
    - Heptageniidae
      - *Stenonema* sp. (9)
  - Trichoptera (caddisflies)
    - Hydropsychidae
      - *Cheumatopsyche* sp. (10)
    - Psychomyiidae
      - *Cyrnellus marginalis* (Banks) (11)
      - *Psychomyiidae* (Genus A) (12)

Bryozoa (freshwater bryozoans) (13)

Platyhelminthes
- Turbellaria (flatworms)
  - Tricladida
    - Planariidae
      - *Cura foremanii* (Girard) (14)

1-14. Identifies number of taxa.

Table 25

Macrobenthic Species, Watts Bar Nuclear Plant, 1975

	TRM 518.0				TRM 527.4				TRM 528.0			
	Wi	Sp	Su	Fa	Wi	Sp	Su	Fa	Wi	Sp	Su	Fa
Annelida												
Clitellata (Oligachaetes)												
Tubificidae												
Branchiura sowerbyi Beddard				x								
Limnodrilus claparedeianus Ratzel				x								
Hirudinea (leeches)				x								
Arthropoda												
Crustacea												
Amphipoda (scuds)												
Gammaridae												
Gammarus sp.								x				
Decapoda (crayfish												
Astacidae												
Orconectes sp.			x				x				x	
Insecta												
Diptera												
Chironomidae (midges)												
Chironomus sp.			x	x			x	x			x	
Orthocladius sp.	x								x			
Parachironomus sp.		x				x				x		
Ephemeroptera (mayflies)												
Heptageniidae												
Stenonema sp.		x	x	x			x				x	
Trichoptera (caddisflies)												
Hydropsychidae												
Cheumatopsyche sp.	x	x		x		x			x			
Psychomyiidae												
Cyrnellus marginalis (Banks)		x	x	x			x				x	
Psychomyiidae (Genus A)					x							

Table 25 (Cont.)

	TRM 518.0				TRM 527.4				TRM 528.0			
	Wi	Sp	Su	Fa	Wi	Sp	Su	Fa	Wi	Sp	Su	Fa
Bryozoa (Freshwater Bryozoans)	x								x			
Platyhelminthes												
Turbellaria (flatworms)												
Tricladida												
Planariidae												
Cura foremanii (Girard)				x								
Total	3	4	4	8	1	2	4	8	3	1	4	-
Total No. of Taxa		12				8				8		

Table 26

Macrobenthos Per Artificial Substrate[a], Watts Bar Nuclear Plant, 1975
(30-Day Colonization)

Organisms	Winter			Spring			Summer			Fall		
	A	B	C	A	B	C	A	B	C	A	B	C
	TRM 518.0											
Annelida												
Clitellata (oligochaetes)												
Tubificidae												
Brachiura sowerbyi Beddard										8	15	5
Limnodrilus claparedeianus Ratzel										10	13	6
Hirudinea (leeches)										1		
Arthropoda		NO ORGANISMS FOUND	NO ORGANISMS FOUND									
Crustacea												
Decapoda (crayfish)												
Astacidae												
Orconectes sp.								1				
Insecta												
Diptera												
Chironomidae (midges)												
Chironomus sp.									1	5	6	5
Orthocladius sp.	3											
Parachironomus sp.				13	5	33						
Ephemeroptera (mayflies)												
Heptageniidae												
Stenonema sp.						1	1	1	2	3	2	1
Trichoptera (caddisflies)												
Hydropsychidae												
Cheumatopsyche sp.	1			5		2				1	2	4
Psychomyiidae												
Cyrnellus marginalis (Banks)						1	8	7	7	1	2	

Table 26 (Cont.)

Organism	Winter A	Winter B	Winter C	Spring A	Spring B	Spring C	Summer A	Summer B	Summer C	Fall A	Fall B	Fall C
	TRM 518.0											
Bryozoa (Freshwater Bryozoans)	1	NO ORGANISMS FOUND	NO ORGANISMS FOUND									
Platyhelminthes												
Turbellaria (flatworms)												
Tricladida												
Planariidae												
Cura foremanii (Girard)											1	
Total Organisms	5			18	5	37	9	9	10	29	41	21
Near Organisms/Station		2			20			9			30	

a. Each artificial substrate was a cylinder-shaped barbeque basket filled with rocks and had a volume of 7675.2 cm^3.

Table 27

Macrobenthos Per Artificial Substrate[a], Watts Bar Nuclear Plant, 1975
(30-Day Colonization)

Organisms	Winter A	Winter B	Winter C	Spring A	Spring B	Spring C	Summer A	Summer B	Summer C	Fall A	Fall B	Fall C
	TRM 527.4											
Arthropoda												
Crustacea												
Amphipoda (scuds)												
Gammaridae											1	
Gammarus sp.												
Decapoda (crayfish)												
Astacidae												
Orconectes sp.		NO ORGANISMS FOUND	NO ORGANISMS FOUND	SUBSTRATE MISSING			1					
Insecta												
Diptera												
Chironomidae (midges)												
Chironomus sp.								2		8	5	3
Parachironomus sp.					23	27						
Ephemeroptera (mayflies)												
Heptageniidae												
Stenonema sp.							1		1			
Trichoptera (caddisflies)												
Hydropsychidae												
Cheumatopsyche sp.						15						
Psychomyiidae												
Cyrnellus marginalis (BANKS)							31	27	28			
Psychomyiidae (Genusa)	4											
Total Organisms	4				23	42	33	29	29	8	6	3
Mean Organisms/Station		1			33			30			6	

a. Each artificial substrate was a cylinder-shaped barbeque basket filled with rocks and had a volume of 7675.2 cm^3.

Table 28

Macrobenthos Per Artificial Substrate[a], Watts Bar Nuclear Plant, 1975
(30-Day Colonization)

Organisms	Winter A	Winter B	Winter C	Spring A	Spring B	Spring C	Summer A	Summer B	Summer C	Fall A	Fall B	Fall C
	TRM 528.0											
Arthropoda												
Crustacea												
Decapoda (crayfish)												
Astacidae												
Orconectes sp.								1				
Insecta												
Diptera												
Chironomidae (midges)												
Chironomus sp.								1				
Orthocladius sp.	3											
Parachironomus sp.						14						
Ephemeroptera (mayflies)												
Heptageniidae												
Stenonema sp.								1				
Trichoptera (caddisflies)												
Hydropsychidae												
Cheumatopsyche sp.	13											
Psychomyiidae												
Cyrnellus marginalis (BANKS)							3	10	6			
Bryozoa (Freshwater Bryozoans)	1											
Total Organisms	17					14	3	13	6			
Mean Organisms/Station		6			5			7				

NO ORGANISMS FOUND (Winter B, Winter C, Spring B, Spring C)

SUBSTRATES MISSING (Fall A, Fall B, Fall C)

a. Each artificial substrate was a cylinder-shaped barbeque basket filled with rocks and had a volume of 7675.2 cm^3.

Table 29

Comparison of Species Composition, Population Densities and Catch Per Drag in Two 5,000 Square Yard Test Areas Located in Wheeler and Chickamauga Reservoirs During August and September 1957.

Species Name	Wheeler 1/		Chickamauga 2/	
	Population Per Sq. Yd.	Catch Per Sq. Yd. Per Drag	Population Per Sq. Yd.	Catch Per Sq. Yd. Per Drag
Butterfly	0.25	0.0010	0.20	0.0003
Bullhead	----	------	0.05	0.0008
Elephant ear	0.30	0.0004	1.10	0.0070
Eggshell	0.10	0.0003	0.05	0.0005
Heelsplitter	0.05	------	0.05	------
Ladyfinger	0.05	0.0002	0.15	0.0007
Monkeyface	0.10	0.0001	1.90	0.0009
Mucket	----	------	0.10	0.0001
Pigtoe	2.50	0.0110	10.70	0.0389
Pimpleback	0.15	------	0.05	0.0001
Pistolgrip	----	------	0.05	0.0001
Pocketbook	----	------	0.10	0.0001
Three-horn	0.85	0.0019	0.35	0.0008
Three-ridge	0.45	0.0050	0.05	0.0008
Sandshell-black	----	------	0.05	0.0001
Maple leaf	0.05	0.0002	----	------
Kidney shell	0.05	------	----	------
Washboard	0.25	------	----	------
Wartyback-pink	0.65	0.0030	0.75	0.0025
Wartyback-white	0.80	0.0013	1.00	0.0024
Deertoe	0.05	------	----	------
Totals	6.70	0.0240	16.70	0.0560

1/ Mile 309.
2/ Mile 515.
* From Scruggs (1960).

Table 30**

Mussels Found in Chickamauga Dam Tailwater,
Chickamauga Reservoir and Watts Bar Dam Tailwater (1964)

Species	Chickamauga Dam Tailwater TRM 468-471	Chickamauga Reservoir and Watts Bar Tailwater
Quadrula pustulosa	0.064	0.034
Quadrula metanevra	0.041	-
Cyclonaias tuberculata granifera	0.043	0.023
Pleurobema cordatum	*	0.057
Elliptio crassidens	0.085	0.034
Elliptio dilatatus	-	0.011
Obliquaria reflexa	0.106	0.011
Plagiola lineolata	0.043	-
Proptera alata	0.027	0.011

* Pleurobema cordatum was the principal commercial shell here in the past; however, no specimens were taken in samples.
** From Isom (1969).

Table 31

Annual Shell Harvest, Tennessee River 1945 -- 1967****

Year	Number of boats (approx.)	Average tons per boat	Average value* per ton $	Total shells (tons)	Total value* $
1945	143	26.01	40	3,720	148,660
1946	149	66.28	38	9,875	373,781
1947	186	57.04	39	10,610	410,540
1948	210	55.54	43	11,663	502,229
1949	200	37.85	35	7,570	265,000
1950	228	32.01	30	10,500	315,000
1951	256	40.00	40	10,241	409,640
1952	256	31.73	45	8,124	365,580
1953	261	41.72	55	10,890	600,518
1954	280	40.07	42	11,220	472,975
1955	298	38.47	44	11,463	504,252
1956	280	23.58	59	6,603	390,583
1957	317	23.27	75	7,376	556,026
1958	294	16.33	60	4,802	288,120
1959	519	10.80	69	5,606	389,616
1960	861	12.06	122	10,380	1,267,875
1961	926	7.60	125	7,039	882,397
1962	802	5.59	141	4,716**	666,548
1963	678	8.10	147	5,800***	852,911
1964	398	5.30	139	2,112	294,385
1965	233	10.37	143	2,418	346,121
1966	268	10.20	211	2,734	577,161
1967	366	6.45	182	2,361	428,561

* Based on river bank prices.
** Divers collected 235 tons.
*** Divers collected 212 tons, dredge boats 97 tons.
**** From Isom (1969).

Table 32

Composition of Mussel Population Below Watts Bar Dam Collected (All Methods)
July and August 1975

Name	Number from TRM 527.6 to 528.5	Number from TRM 520.5 to 521.3	Total	% of Total
Amblema plicata	6	2	8	5%
Quadrula pustulosa	9	20	29	19%
Quadrula metanevra	1	3	4	3%
Tritogonia verrucosa	2	1	3	2%
Cyclonaias tuberculata	5	15	20	13%
Pleurobema cordatum	12	21	33	22%
Elliptio crassidens	16	14	30	20%
Obliquaria reflexa	1	1	2	1%
Actinonaias carinata	1	0	1	<1%
Plagiola lineolata	2	7	9	6%
Proptera alata	6	3	9	6%
Ligumia recta	3	0	3	2%
*Lampsilis orbiculata**	2	0	2	1%
Total	66	87	153	100%

* On Department of Interior list of proposed endangered species.

Table 33

CORBICULA MANILENSIS ENUMERATION AT TWO STATIONS[a]

BELOW WATTS BAR DAM (CHICKAMAUGA RESERVOIR)

Date	Area Sampled	No. Samples Collected		Average No. Organisms Sampled		Average No. Organisms m^{2}-1		Mean Lgth. (mm)		Mean Hgt. (mm)		Mean Width (mm)	
		Sta. 1	Sta. 2	Sta. 1	Sta. 2	Sta. 1	Sta. 2	Sta. 1	Sta. 2	Sta. 1	Sta. 2	Sta. 1	Sta. 2
5/5/76	0.5 m^2	5	5	59	48	236	192	38	35	35	32	22	20
8/4/76	1 ft^2	2	2	67	60	268	240	36	32	32	30	20	19

a. Station 1 = TRM 520.5 to TRM 521.3 (10 meters from left shore).
Station 2 = TRM 527.7 to TRM 528.5 (10 meters from left shore).

Figure 1

Annual Mussel Shell Harvest in the Tennessee River, 1945 - 1967*

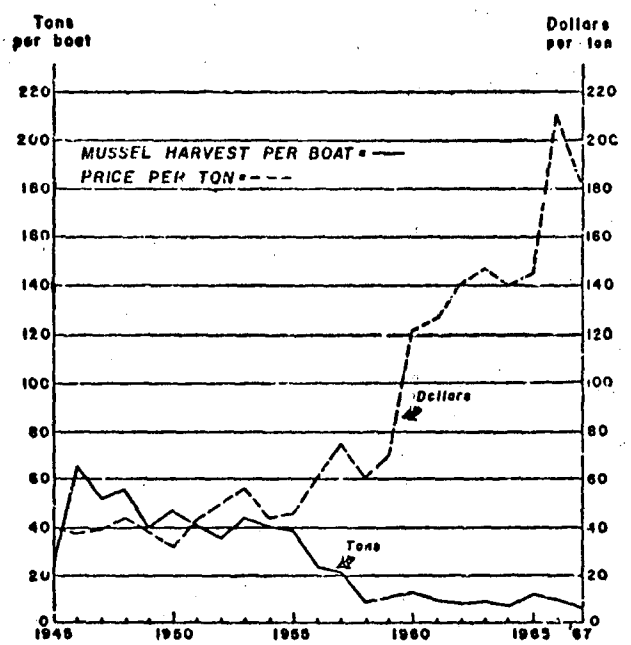

* From Isom (1969)

Water Quality and Aquatic (Nonfish) Monitoring Program (Nonradiological)

Preoperational Monitoring

The nonradiological water quality and aquatic biology (nonfish) monitoring programs were implemented in the vicinity of the Watts Bar Nuclear Plant in August 1973 and February 1973, respectively. The current monitoring programs are summarized in tables 1 and 2. Although extensive adjustments to improve logistics and coverage were made in the water quality program during the first six months the program was underway, no major revisions have been made in the program since May 1974. With the exception of the addition of mussel surveys by scuba divers in 1975, the aquatic biology program is the same as initially implemented in February 1973.

A construction effects monitoring program to measure the instream impact of construction activities on the suspended solids concentration of the Tennessee River was implemented in January 1973. Based on a review of the results of samples collected during the period from January 1973 to September 1973, it was concluded that the Watts Bar Nuclear Plant construction activities did not have a detectable impact on the turbidity and suspended solids of the Tennessee River. Consequently, the instream water quality construction effects monitoring program was discontinued in September 1973.

Monitoring of the effluents from the sanitary waste treatment plants (construction plants) was initiated on March 1974. The monitoring and reporting of the results of this program are in accordance with the requirements of the NPDES permit for this discharge (TN0020168) which was issued by EPA on December 10, 1973.

Monitoring of the discharge from the construction yard pond for the parameters pH, turbidity, and suspended solids was initiated on a routine basis in March 1975. Although this discharge was identified in the NPDES permit application for construction discharges filed with EPA on July 21, 1975, a discharge permit has not yet been issued by EPA.

Operational Monitoring

In accordance with the requirements of the Federal Water Pollution Control Act Amendments of 1972, TVA plans to file a Section 402 NPDES permit application (standard form C) with the Regional Administrator, EPA Region IV, Atlanta, Georgia, for the operational discharges from the Watts Bar Nuclear Plant. The operational NPDES permit which is expected to be issued by EPA prior to operation of the plant will be the basis for the development of operational aquatic monitoring programs for the Watts Bar Nuclear Plant. The final NPDES permit will specify the specific effluent limitations for thermal, chemical, and sanitary waste discharges originating from the facilities as well as specific effluent and instream (abiotic and biotic) monitoring and reporting requirements necessary to determine compliance with the effluent limitations. The permit will also identify specific monitoring and reporting requirements associated with the assessment of intake technology under Section 316b of the FWPCA. Copies of the NPDES permit and required monitoring reports along with any subsequent revisions in the terms of the NPDES permit will be submitted to USNRC for information.

Table 1

Summary of Quarterly Preoperational Water Quality Monitoring Program (Nonradiological)

Watts Bar Nuclear Plant

Sampling Location (River & Mile)	Horizontal Location (Percent)	Depths for Nonradiological Water Sample Collection (Meters)[a]
Tennessee River Mile 532.1	37	1*, 3*, 5*, 10, 20
	85	1, 10
Tennessee River Mile 529.9	90	(1)*
Tennessee River Mile 529.5	20	1*, 3*, 5*
Tennessee River Mile 528.0	75	1*, 3*, 5*
Tennessee River Mile 527.4	33	(1)*, (5)*
	67	(1)*, 3*, (5)*
Tennessee River Mile 518.0	33	1, 5
	67	1*, 3*, 5*
Tennessee River Mile 506.6	25	1
	70	1*, 3*, 5*, 10
Hiwassee River Mile 2.3	35	1, 10
	80	1
Tennessee River Mile 496.5	57	1*, 3*, 5*, 8

a. Specific Analysis--Temperature and dissolved oxygen concentrations will be determined at each location shown in table 1. Single measurements will be made on samples collected from the Watts Bar Dam tailrace (TRM 529.9). A complete profile of these parameters will be measured at all other locations. Each profile will include measurements at the 1.5-meter depth to correspond to Tennessee water quality standards, measurements at the depths indicated in table 1, and additional measurements at intermediate depths when the difference between successive measurements is greater than 1° C for temperature or 1 mg/l for dissolved oxygen.

Alkalinity and pH will be measured at all depths marked with an asterisk.

Fecal coliform concentrations will be determined at surface (1 meter) depths shown in parentheses.

Laboratory Analyses--At depths marked with an asterisk, appropriate samples are to be collected for laboratory determination of TOC, nitrogens (organic, ammonia, and nitrate plus nitrite), and total phosphorus. At depths shown in parentheses, appropriate samples are to be collected for laboratory determination of conductivity, color (true and apparent), solids (suspended and dissolved), turbidity, BOD (5-day, 20° C), COD, phosphorus (dissolved), calcium, chloride, magnesium, hardness, potassium, silica (dissolved), sodium, sulfate, aluminum, arsenic, barium, beryllium, boron, cadmium, chromium, copper, iron (filterable and total), lead, lithium, manganese (filterable and total), mercury, nickel, selenium, silver, titanium, and zinc.

NOTE: This program reflects the program underway as of September 1976. However, the complete program is subject to periodic review and revision.

Table 2

Summary of Quarterly Preoperational Aquatic (Nonfish) Monitoring Program (Nonradiological)

Watts Bar Nuclear Plant

Station or TRM	Horizontal Location[1]	Depths Sampled for Chlorophyll, Phytoplankton, & Carbon-14 (meters)[2]	Zooplankton Vertical Tows from Bottom to Surface (duplicate tows)	Artificial Benthos Substrates Colonization Period 3 mths (No. Baskets Set/Sta.)	Periphyton Autotrophic-Heterotrophic Indices and Enumeration Colonization Period 1 mth (No. Racks Set/Sta.)[3]
532.1	R-LM	0,1,3,5	X	3	2
529.9[4]	R-LM	0,1,3,5	X	3	2
528.0[5]	R-LM	0,1,3,5	X	3	2
527.4	R-LM	0,1,3,5	X	3	2
518.0	R-LM	0,1,3,5	X	3	2
506.6	R-LM	0,1,3,5	X	3	2
496.5	R-LM	0,1,3,5	X	3	2
527.7-528.2				X[5]	
520.5-521.3				X[5]	

1/ Horizontal location looking downstream; R-LM = area from right shore to left middle of stream

2/ These depths sampled if applicable; otherwise, surface, middle, and near bottom

3/ Five plexiglas plates per rack - approximate colonization period one month

4/ Tailrace

5/ Mussel bed investigations by SCUBA divers initiated in 1975

NOTE: This program reflects the program underway as of September 1976. However, the complete program is subject to periodic review and revision.