Tennessee Valley Authority, Post Office Box 2000, Spring City, Tennessee 37381

OCT 0 6 1995

U.S. Nuclear Regulatory Commission
ATTN: Document Control Desk
Washington, DC 20555

Gentlemen:

In the Matter of the Application of	)	Docket Nos. 50-390
Tennessee Valley Authority	)	50-391

WATTS BAR NUCLEAR PLANT (WBN) - CHANGES TO FINAL SAFETY ANALYSIS REPORT (FSAR) CHAPTER 8 TO RESOLVE AMENDMENT 90 ISSUES

This letter submits proposed changes to FSAR Chapter 8 to resolve several questions from the NRC staff that resulted from their review of FSAR Amendment 90. The questions were discussed in detail during a conference call on October 2, 1995. TVA agreed to submit the resulting FSAR changes in advance of the next FSAR amendment to expedite closure of the Amendment 90 issues.

The enclosure is a set of marked up pages from FSAR Sections 8.2.1.8, 8.2.2, and 8.3.1.4.3. The markups provide clarifications to resolve three basic issues identified in the NRC staff review of Amendment 90:

1. Electric power system response to a loss of offsite power when a diesel generator is connected in parallel with offsite power for testing,
2. Scope of transient stability studies that were performed as part of WBN's grid analysis,
3. Circuit breaker testing requirements for breakers that protect non-Class 1E circuits.

In addition, enclosed is a draft of Figure 8.2-1A which corrects minor drawing errors that involved duplicate equipment numbers for breakers and disconnect switches.

160012

9510160099 951006
PDR ADOCK 05000390
K PDR

A030
1/1

OCT 0 6 1995

If you have any questions about the information provided in this letter, please telephone John Vorees at (615) 365-8819.

Sincerely,

for R. R. Baron
Nuclear Assurance and
Licensing Manager (Acting)

Enclosure
cc (Enclosure):

NRC Resident Inspector
Watts Bar Nuclear Plant
Rt. 2, Box 700
Spring City, Tennessee 37381

Mr. P. S. Tam, Senior Project Manager
U.S. Nuclear Regulatory Commission
One White Flint, North
11555 Rockville Pike
Rockville, Maryland 20852

U.S. Nuclear Regulatory Commission
Region II
101 Marietta Street, NW, Suite 2900
Atlanta, Georgia 30323

ENCLOSURE

PROPOSED CHANGES TO
FINAL SAFETY ANALYSIS REPORT (FSAR)
SECTIONS 8.2.1.8, 8.2.2, AND 8.3.1.4.3

either CSST C or D not due to a fault in the CSST differential zone of protection, under this alignment, the affected 6.9-kV shutdown board loads will be disconnected from offsite power and sequentially loaded onto their respective diesel generator.

For an acceptable range of 161-kV grid conditions, either offsite power circuit can start and supply all electrical equipment that would be supplied from the Class 1E distribution systems for a design basis accident in Unit 1 and no fuel in Unit 2 (via transformers C or D), and a simultaneous single worst case transmission system contingency. For this event, transformer C or D would be operating within its OA rating and adequate voltage would be supplied to the safety-related buses. A load-shedding scheme is provided to reduce the BOP loads under certain conditions, but no credit is taken for load shedding in the TSS.

The BOP load-shedding scheme trips selected loads if both Unit 1 and Unit 2 generators are tripped and either voltage is lost at one of the start boards or certain 161-kV transmission system contingencies exist. These 161-kV transmission system contingencies are when the double-circuit WBH-SQN and WBH-Athens 161-kV lines, the WBN-Rockwood line, or the three-terminal Roane-Rockwood-Kingston line is out of service. Initiation of load shedding is accomplished automatically by undervoltage and both units' generators tripped, or by the operator selecting the 161-kV system contingency switch mode and both units' generators being tripped. (The WBN operator manually selects the 161-kV contingency position on the normal/161-kV contingency switch.). Two reactor coolant pumps and two 6.9-kV unit boards per unit are tripped when the above conditions exist. Tripping of these loads results in a significant reduction (50% of the reactor coolant pumps and unit boards) of the station load.

The load-shedding scheme consists of two redundant trip and lockout circuits for each circuit breaker receiving a load-shed command. The redundant load-shedding circuits are located in different 6.9-kV start boards. One load-shedding circuit associated with CSST A is in 6.9-kV start board A, and the other which is associated with CSST B is in 6.9-kV start board B. Control power to the redundant auxiliary power system (APS) load-shedding circuits is provided from separated 250V dc batteries and battery boards. APS load-shedding circuit 1 receives control power from 250V DC Battery 1 via 250V Turbine Building Board 1, and APS circuit 2 from 250V DC Battery 2 via 250V Turbine Building Board 2. Loss of control power to either 250V Turbine Building Board initiates automatic transfer from the normal dc supply to the alternate dc supply with annunciation that auto transfer has occurred. This maximizes the ability of the load-shedding scheme to operate if grid and generator conditions warrant such operation.

The 6.9-kV shutdown boards are provided with loss-of-voltage and degraded-voltage relays that initiate transfer from the normal supply, to the standby (diesel generator) power supply. If the standby supply is paralleled with one of the offsite supplies for testing, loss of the standby supply would cause reverse power relays to trip the standby circuit breaker.

ADD

INSERT A

INSERT A

For a loss of offsite power during diesel generator testing, the diesel generator will switch to the emergency mode of operation with one exception. The diesel generator will remain in the testing mode if the 6.9-kV shutdown board's offsite power feed is through the alternate feeder. In this case, the diesel generator's overcurrent relays are active to prevent the diesel generator from being overloaded. If an accident signal is initiated during testing of the standby supply, the standby breaker is tripped and the emergency loads are automatically energized by the offsite power supply. Should a LOCA and a loss of offsite power occur when a diesel generator is paralleled with the grid under test, its 6.9-kV shutdown board standby and supply breakers are tripped, load shedding occurs and the diesel generator sequencer will load the accident loads. Only one diesel generator will be in the test mode at any given time unless both units are in cold shutdown or not fueled; then, both diesels of the same train may be in test. Therefore, loss of any onsite power generation will not prevent the distribution system from being powered from the offsite circuits.

In accordance with GDC 18 requirements, the offsite power system has been designed to permit appropriate periodic inspection and testing. Transfers from the normal (offsite) supply to the alternate (offsite) supply, or from the normal or alternate supply to the standby supply, may be manual or automatic. Testing of these transfers while the nuclear unit is at power could result in transients that could cause tripping of the reactor or turbine. For this reason, testing of the manual and automatic sequence will be performed when the unit is shutdown. Provisions exist for individual testing of the BOP load-shedding circuits while maintaining the load-shedding capability of the circuit not being tested for any 161-kV grid contingency.

8.2.2 Analysis

Each 161-kV circuit and CSSTs C and D have sufficient capacity and adequate voltage to supply the essential safety auxiliaries of a unit under loss of coolant accident conditions concurrent with a simultaneous worst-case single transmission system contingency.

Physical separation of lines, primary and backup protection systems, and a strong transmission grid minimize the probability of simultaneous failures of offsite power sources. Results of steady-state AND TRANSIENT STABILITY studies show that the offsite power sources remain intact and are reliable sources to supply the onsite electric power system for (1) an SI in a WBN nuclear unit with an electrical fault in the generator step-up transformer, or (2) an SI in a WBN nuclear unit and either the loss of SQN Unit 2, the loss of the largest load on the grid (Bowater 161-kV substation), or the loss of the most critical ~~500-kV~~ transmission line. ~~(Widows Creek-Madison).~~ DELETE

Transient stability studies included conditions of 3-phase faults on transmission lines connecting the nuclear units into the transmission system. Studies of these faults included stuck-breaker conditions in which WBN Unit 1 and its 500-kV lines were disconnected automatically from the transmission system. Also studied was an SI at WBN with the loss of SQN Unit 2. Transient stability studies of the 161-kV system supplying preferred power to the nuclear plant included 3-phase close-in and remote line faults, stuck-breaker conditions, main bus section faults, and an SI in a nuclear unit. For all cases studied, the worst case resulted from an SI in a nuclear unit and a simultaneous main bus fault on bus section 1-1 at WBH with normal clearing. The 161-kV bus voltage which supplies CSSTs A and D recovered to 153 kV (95%) after 25 cycles. The 6.9-kV CSST D-X bus voltage recovered to 6072 volts (88%) after 24 cycles.

ADD 10/4/85

INSERT B 10/4/85

ANSTEC
APERTURE
CARD

Also Available on
Aperture Card

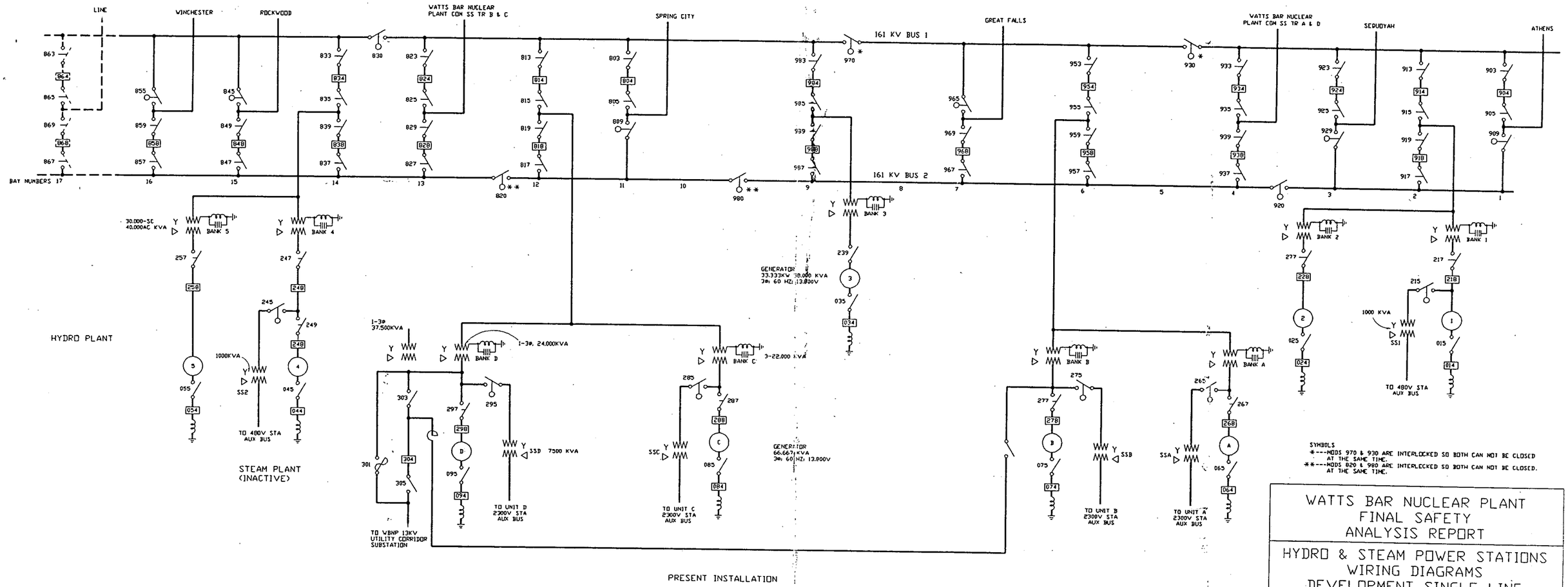

WATTS BAR NUCLEAR PLANT
FINAL SAFETY
ANALYSIS REPORT

HYDRO & STEAM POWER STATIONS
WIRING DIAGRAMS
DEVELOPMENT SINGLE LINE
TVA DWG NO. 45N501 R27
FIGURE 8.2-1A

9510160099-01

Wed Sep 20 13:29:58 1995 r:\byers\qcf/BYERS.qcf Joy Anders C:\DWG\WBN501.PRF

TVA conducted fire tests, externally initiated by a propane burner, on a full scale mockup of trays loaded with cables coated with a fire-resistant material. No self-sustaining fire could be established until the coating was fractured and cables separated. The cable coating also protects against development of a fire from electrical faults since it restricts availability of oxygen needed for combustion. Therefore, TVA takes credit for the coating on cables not qualified to IEEE 383 flame test or equivalent, together with adequate circuit protective device(s) (as described below) as meeting the intent of Regulatory Guide 1.75 requirements to achieve independence between Class 1E and non-Class 1E cables routed in cable trays or conduits. Effective October 18, 1984, the use of coating on cables which meet IEEE Std. 383-1974 is not required except when the coating is used as part of electrical penetration fire stops as discussed in Section 8.3.1.4.4. In all cable coating applications, up to 10 cables not qualified to the IEEE 383 flame test or equivalent may remain uncoated on cable trays, unless small gaps or cracks in the coating exist in the tray segment. In such cases, up to 9 cables not qualified to the IEEE 383 flame test or equivalent may remain uncoated.

There are certain safety related components which are located in a nonseismic structure and whose circuits extend into a Category I structure. The circuits for these components have the following separation. While in a Category I structure, these circuits are routed with circuits of the same redundant division of separation. When they leave the Category I structure, these circuits are routed in conduits identified as GSPS conduits as described in Section 8.3.1.4.5. Conduits carrying these circuits are separated by a minimum 1-inch air gap from conduits or trays containing circuits of either redundant divisions or nonsafety related functions.

Tray and conduit systems located in Category I structures have seismic supports. In addition, a non-safety related cable may be routed with those for essential circuits, provided that the cable, or any cable in the same circuit, has not been subsequently routed onto another tray containing a different division of separation of essential cables.

Nondivisional associated cables that are routed in cable trays designated for Class 1E cables are treated the same as the Class 1E cables. The nondivisional cables are subject to the same flame retardant, cable derating, splicing restrictions, and cable tray fill as the Class 1E cables. Furthermore, these non-Class 1E cables are qualified in the same manner as Class 1E cables and/or protected by one of the protective schemes discussed below (expect for low voltage non-Class 1E circuits, typically lighting, heat trace, and communications branch circuits, routed in dedicated conduits in Category I structures discussed below). Based on the results of the analyses of associated circuits, it is demonstrated that Class 1E circuits are not degraded.

DELETE

These analyses include a review of protective devices for nondivisional associated medium voltage power, low voltage power, and control level cables routed in nondivisional raceways in Category I structures. Each of these cables (except for low voltage non-Class 1E, typically lighting, heat trace, and communication branch circuits, routed in dedicated conduits in Category I structures discussed below) is ~~are~~ provided short circuit protection by either a single circuit breaker periodically tested, a single fuse, a circuit breaker and fuse in series, two circuit breakers in series, or two fuses. Energy produced by electrical faults in non-Class 1E cables routed in medium-level signal and low-level signal raceways is considered insignificant and is considered no challenge to Class 1E cables.

DELETE

Low voltage non-Class 1E circuits (lighting, heat trace, and communications) in Category I structures that are totally routed in dedicated conduit between their power source and cable termination points cannot be adversley associated, either electrically or physically, with Class 1E circuits of either division. Circuit breaker testing is not required for any of these circuits that are shown by analysis to have limited energy available such that given a circuit breaker failure cables in adjacent raceways are not adversley affected. The metal conduit is approximately twice as thick as a cable tray cover and is sufficient as a heat sink/shield to provide protection from the limited energy being carried by a non-Class 1E low voltage cable routed in a conduit. There is also a lack of sufficient oxygen to support combustion inside the conduits. Consequently, circuit breakers protecting low voltage non-Class 1E cables routed in conduits from limited energy will not be included in the testing program. Also, any circuits that can be shown to meet physical separation requirements identified in IEEE 384-1992 will not have their circuit breakers included in the testing program.

The results of the protective device application analysis for associated and non-Class 1E cables are discussed in Appendix 8E. This analysis, based on data taken from IEEE 500-1977, demonstrates that each of the following protective schemes has a reliability which is essentially equivalent to that of a single circuit breaker periodically tested:

1. A circuit breaker and fuse in series, or
2. Two circuit breakers in series.

In addition to these protective schemes, IEEE 500-1977 data verifies that for this application a single fuse with no periodic testing has a failure rate which is approximately equal to the failure rate of two circuit breakers in series (see Part B analysis of Appendix 8E). Therefore, a single fuse when used as an interrupting device for the above cables, does not require periodic testing due to its stability, high reliability, and lack of drift. To further support this position, TVA takes credit for installed cable coating as previously discussed. Thus, WBNP concludes that any one of the following protective schemes for associated and non-Class 1E cables provides a reliable means of meeting the intent of Regulatory Guide 1.75 to not degrade Class 1E cables:

1. A circuit breaker and fuse in series
2. Two circuit breakers in series
3. A single fuse
4. A single circuit breaker periodically tested

All of the installed protective devices and those added to further protect the associated and non-Class 1E cables are of a high quality commensurate with their importance to safety. For non-Class 1E circuit breakers, this requires