Tennessee Valley Authority, Post Office Box 2000, Spring City, Tennessee 37381

AUG 16 1995

U.S. Nuclear Regulatory Commission
ATTN: Document Control Desk
Washington, D.C. 20555

Gentlemen:

In the Matter of the Application of	)	Docket Nos. 50-390
Tennessee Valley Authority	)	50-391

WATTS BAR NUCLEAR PLANT (WBN) - FINAL SAFETY ANALYSIS REPORT (FSAR) - PROPOSED CHANGES FOR AMENDMENT 90

The purpose of this letter is to provide draft FSAR pages to facilitate the NRC'S review of the FSAR. Enclosed are the marked-up pages, which will be included in Amendment 90 scheduled to be submitted by August 31, 1995. The marked-up pages include editorial and other changes resulting from TVA's continued review of the FSAR and from preoperational testing activities.

Draft FSAR pages provided in TVA's letters dated July 13, July 18, July 21, and July 24, 1995, will also be included in Amendment 90.

If you should have any questions concerning this matter, please contact John Vorees at (615) 365-8819.

Sincerely,

Paul Baron

R. R. Baron
Nuclear Assurance
and Licensing Manager (Acting)

Enclosure
cc: See page 2

230083

9508240141 950816
PDR ADOCK 05000390
A PDR

D030 1/1

50-390 TVA WATTS BAR 1

FSAR - PROPOSED CHANGES FOR AMENDMENT 90

REC'D W/LTR DTD 08/16/95....9508240141

- NOTICE -

THE ATTACHED FILES ARE OFFICIAL RECORDS OF THE INFORMATION & RECORDS MANAGEMENT BRANCH. THEY HAVE BEEN CHARGED TO YOU FOR A LIMITED TIME PERIOD AND MUST BE RETURNED TO THE RECORDS & ARCHIVES SERVICES SECTION, T5 C3. PLEASE DO NOT SEND DOCUMENTS CHARGED OUT THROUGH THE MAIL. REMOVAL OF ANY PAGE(S) FROM DOCUMENT FOR REPRODUCTION MUST BE REFERRED TO FILE PERSONNEL.

- NOTICE -

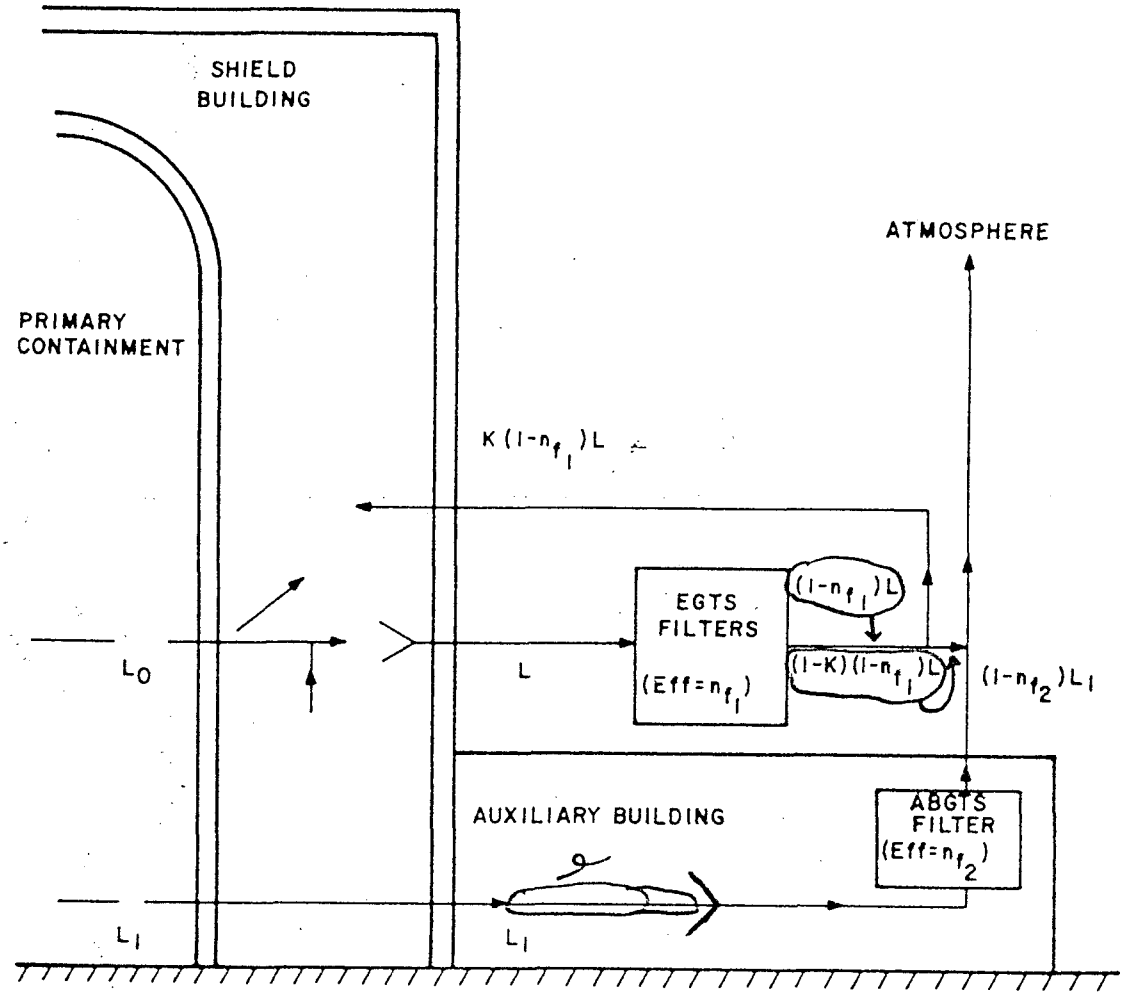

NOTE: Minor bypass leakage paths are not shown.

Revised by Amendment ~~56~~

WATTS BAR NUCLEAR PLANT FINAL SAFETY ANALYSIS REPORT
SCHEMATIC OF LEAKAGE PATH FIGURE 15.5-1

Insert, 8.3-41 (2 sheets)
8.3-45
8.3-52
Figure 8.3-5a
9.2.1-1
9.2.1-2
9.2.1-3
9.2.1-4
9.2.1-6
9.2.1-7
9.2.1-8
9.2.1-9
9.2.1-10
9.2.2-3
9.2.2-4
Table 9.2-1
9.3-7
9.3-42
9.4-5
9.4-39
9.4-42
9.4-48
Table 9.4-4 (Sh. 13 of 13)
Figure 9.4-4
Figure 9.4-6
9.5-3
9.5-7
9.5-9
9.5-16
Figure 9.5-17
10.4-40
Figure 12.3-4
Figure 12.3-8
Figure 12.3-10
Figure 12.3-12
13.4-4
15.5-1
15.5-2
15.5-4
15.5-5
15.5-6
15.5-7
15.5-9
15.5-10
15.5-11
15.5-12
15.5-13
15.5-14
15.5-15
15.5-16
15.5-19
15.5-20
15.5-21
15.5-22
15.5-23
Table 15.5-2 (Sh. 1 of 1)
Table 15.5-3 (Sh. 1 of 1)
Table 15.5-5 (Sh. 1 of 1)
Table 15.5-6 (Sh. 2 of 3)
Table 15.5-7 (Sh. 1 of 1)
Table 15.5-8 (Sh. 1 of 1)
Insert, Table 15.5-8
Table 15.5-9 (Sh. 1 of 1)
Table 15.5-12 (Sh. 1 of 2)
Table 15.5-12 (Sh. 2 of 2)
Table 15.5-13 (Sh. 1 of 1)
Table 15.5-14 (Sh. 1 of 1)
Table 15.5-15 (Sh. 1 of 1)
Table 15.5-17 (Sh. 1 of 1)
Table 15.5-18 (Sh. 1 of 1)
Table 15.5-19 (Sh. 1 of 1)
Table 15.5-23 (Sh. 1 of 1)
Figure 15.5-1

The blowdown from the CCW is used to dilute and dispense low-level radioactive liquid wastes. The system is unitized so that the cooling tower, conduits, circulating pumps and main condenser of each unit are independent of those of the other unit. The CCW pumping station is located in the yard between the Turbine Building and the cooling towers. There are eight circulating pumps. Four pumps for each unit operate in parallel and circulate water from the cooling tower cold water basin, through the condenser, and back into the heat exchanger section of the tower.

The Essential Raw Cooling Water System (ERCW) provides the essential auxiliary support functions to the Engineered Safety Features (ESF) of the plant. The system is designed to provide a continuous flow of cooling water to those systems and components necessary to plant safety either during normal operation or under accident conditions. The ERCW system consists of eight ERCW pumps, four traveling screens, four traveling screen wash pumps, and four strainers located in the intake pumping station.

1.2.2.9 Component Cooling System

The Component Cooling System (CCS) is the closed cooling system designed to remove residual and sensible heat from the Reactor Coolant System (RCS), via the Residual Heat Removal System; cool the spent fuel pool water and the letdown flow of the Chemical and Volume Control System (CVCS); provide cooling to dissipate waste heat from various plant components; and provide cooling for safeguard loads after an accident.

1.2.2.10 Chemical and Volume Control System

The CVCS, discussed in Section 9.3.4, is designed to provide the following services to the RCS:

1. Maintenance of programmed water level in the pressurizer, i.e., maintain required water inventory in the RCS.

2. Maintenance of seal water flow to the reactor coolant pumps.

3. Control of reactor coolant water chemistry conditions, activity level, soluble chemical neutron absorber concentration and makeup.

4. Processing of excess reactor coolant to effect recovery and reuse of boric acid and primary makeup water. This operation is not performed by CVCS for Unit 1. Liquid waste will be processed through the waste disposal mobile demineralizer.

5. Emergency core cooling (part of the system is shared with the Emergency Core Cooling System).

During power operation, a continuous feed-and-bleed stream is maintained to and from the RCS. Letdown water leaves the RCS and flows through the shell side of the regenerative heat exchangers where it gives up its heat to makeup water being returned to the RCS. The letdown water then flows through the orifices where its pressure is reduced, then through the letdown heat exchanger, followed by a second pressure reduction by a low-pressure letdown valve. After passing through a mixed bed demineralizer, where ionic impurities are removed, the water flows either through the cation demineralizers or directly through the reactor coolant filter, and into the volume control tank via a nozzle. The vapor space in the volume control tank contains hydrogen which dissolves in the coolant. Any fission gases present are removed from the system by venting of the volume control tank when required.

The hydrogen recombiner system (Section 6.2.5) and hydrogen mitigation system (Section 6.2.5A) are designed to allow testing to assure the operability of the manual controls that place the systems in operation, and to assure the power supply and the operability of the electric heaters. The systems are designed to permit, under conditions as close to design as practical, the operability of each system as a whole.

Criterion 44 - Cooling Water

A system to transfer heat from structures, systems, and components important to safety, to an ultimate heat sink shall be provided. The system safety function shall be to transfer the combined heat load of these structures, systems, and components under normal operating and accident conditions.

Suitable redundancy in components and features, and suitable interconnections, leak detection, and isolation capabilities shall be provided to assure that for onsite electric power system operation (assuming offsite power is not available) and for offsite electric power system operation (assuming onsite power is not available) the system safety function can be accomplished, assuming a single failure.

Compliance

A Seismic Category I Component Cooling System (CCS) (Section 9.2) is provided to transfer heat from the reactor coolant system reactor support equipment and engineered safety equipment to a Seismic Category I Essential Raw Cooling Water (ERCW) system (Section 9.2).

The CCS serves as an intermediate system and thus a barrier between potentially or normally radioactive fluids and the river water which flows in the ERCW system.

The CCS consists of two independent engineered safety subsystems, each of which is capable of serving all necessary loads under normal or accident conditions.

In addition to serving as the heat sink for the CCS, the ERCW system is also used as heat sink for the containment through use of the containment spray heat exchangers, and engineered safety equipment through use of compartment and space coolers. The ERCW system consists of two independent ~~loops,~~ trains, each of which is capable of providing all necessary heat sink requirements. The ERCW system transfers heat to the ultimate heat sink (Section 9.2).

Electric power is discussed in Chapter 8.

TABLE 3.2-7

(Sheet 1 of 13)

CODE CASES AND PROVISIONS OF LATER CODE EDITIONS AND ADDENDA USED BY TVA FOR DESIGN AND FABRICATION

Source Document	New Source	Provisions of Later Code	Related Requirements and Regulatory Guide Requirements	Examples When Used
I. CODE CASES				
A. DESIGN/MATERIAL RELATED				
N/A	N-192	Provides rules for use of flexible metal hose	Regulatory Guide 1.84, Rev 26 imposes the following addition to the requirements of Code Case N-192: The applicant should indicate system application, design and operating pressure/temperature rating of the flexible hose. Data to demonstrate compliance of the flexible hose with NC/ND-3649 particularly NC/ND-3649.4(e), are required to be furnished with the application.	Referenced in data report for some of the flexible metal hose assemblies.
N-224-1	N/A	Provides rules for the use of ASTM A-500 Grade B and ASTM A-501 as integrally welded attachments.		
N/A	N-304	Provides for use of other materials not listed in the appendices.	None	Code Case N-304 was originally approved by the NRC in Regulatory Guide 1.84, Rev. 20 dated November 1982. Subsequent revisions of the Code Case have continued to retain unrestricted approval.
NX-2000	N-188-1	Provides rules for using alloy 625 or 825 tubing that is welded without filler metal.	None	Materials to be used for flexible metal hose assemblies
N/A	N-514	Provides alternate analysis for pressure/temperature curves and low temperature overpressure protection (LTOP) system.	None	Pressure and Temperature Limits Report (PTLR)

TABLE 3.2-7

(Sheet 12 of 13)

CODE CASES AND PROVISIONS OF LATER CODE EDITIONS AND ADDENDA USED BY TVA FOR DESIGN AND FABRICATION (Cont'd)

Source Document	New Source	Provisions of Later Code	Related Requirements and Regulatory Guide Requirements	Examples Where Used
NB-5250 and NC-5261	77W78	Exempts welds of non-structural attachments from liquid penetrant or magnetic particle examination. Does not exempt the removal area of non-structural or temporary attachments.	None	WBPER910208
NB/NC/ND 6114.2	80S81	Provides exemption to requirement to re-hydro following repair by welding if repair weld is not required to be radiographed per NB/NC/ND-4453.4.	None	Used in G-29 process specification 3.M.9.1
NB 2510(a)	83S83	Seamless pipe, tube, and fittings 1"NPS and less need not be examined by the rules of this subarticle.	None	>Use of examination requirements for ASME Section III, Class 1, 1" nominal pipe and smaller from a later edition. Invoke for 1" NPS and less, only
Table ~~NB~~ C-4622 ~~1~~ 3-1	74S76	Exempts PWHT in P1 materials less than 1 1/2" thick provided 200 degrees F preheat is used.	None	~Used to disposition WBP900419PER
NX-4427	80W82	Allows fillet welds to be undersize 1/16 inch for 10% of length of weld.	None	Weld Project
NCA 1273	80S80	Exempts orifice plates not exceeding 1/2" nominal thickness which are clamped between flanges and used for flow measuring service only from the code.	None	Orifice Plates
NB 2538.4	77S78	Areas ground to remove oxide scale or other mechanically caused depressions...need not be PT or MT examined.	None	Provisions for not NDE examining impressions caused by mechanical means.

TABLE 3.2-7

(Sheet 13A of 13)

CODE CASES AND PROVISIONS OF LATER CODE EDITIONS AND ADDENDA USED BY TVA FOR DESIGN AND FABRICATION (Cont'd)

Add

Source Document	New Source	Provisions of Later Code	Related Requirements and Regulatory Guide Requirements	Examples Where Used
NC/ND-3651	74S75	Allow $Pd^2/D_o^2-d^2$ to be used for pressure stress instead of $PD_o/4t_n$	None	Stress Qualification of ASME Classes 2 and 3 piping
NC/ND-3652.4	74ED	Provides a method for determining section modulus which is also consistent with interpretation III-1-77-270.	None	The generation of a section modulus value for use in determining stress values.
NCA 3800	89ED	Metallic material manufacturers and material suppliers Quality System program provides for non certificate holders QA Manual revision and date to be placed on the documentation requirements for 1" bar stock.	None	QA programmatic requirements for vendors supplying materials and components.
ASME-III, Appendix XVII, 2461.1	80ED	Bolting material allowable stress of non-pressure retention parts (i.e., motor actuator mounting screws).	None	For the analysis of non-pressure retention parts of 1-FCV-72-13 and 1-FCV-72-34 for Sect. increased valve closure thrust loops. SQNP calc. SCG-4M-00786 was reviewed for WBNP application. Since the 1971 ASME-III NC Codes do not contain stress allowables for non-pressure retention parts, thus ASME-III NC and Appendix-XVII of 1980 Codes, Sect. 2461.1 rules will be used for the analysis. Ref. DCN-S-33722-A and MEB Calc. EPM CDM-071092 and -071192.
NC/ND 2311	71S73	This provision exists in Section NB 2311 Summer 1972 Addenda which is referenced in Sections NC/ND.	None	Requirements of later Code exempting certain materials from impact test for Class 2 and Class 3 systems.

recommendations of ASCE Paper 3269, 'Wind Forces on Structures'[3]. ANSI A.58.1-1972, 'Building Code Requirements for Minimum Design Loads in Building and Other Structures'[4] is used to provide an alternate method to determine tornado wind loads. The provisions for gust factors and variations of wind velocity with height are not applied. The dynamic wind pressure, q, is defined as $q = 0.00256V^2$, where q is in psf and V is in mph. The wind pressure, p, in psf, is defined as $p = Cq$, where C is the shape coefficient (C_D).

A 1.3 shape coefficient is included for box-shaped structures with vertical walls normal to the wind direction. The dynamic pressure load, $p = 1.3q$, due to tornadoes is applied to the structure walls and roof in the same manner as the wind loads in Section 3.3.1.

Cylindrical structures and tanks have the same shape coefficients applied as for wind loads in Section 3.3.1. The pressures are applied over the structures as shown in Table 4(f) of ASCE Paper 3269[3].

The loadings of the wind force and the depressurization are considered to act concurrently. Coincident wind velocities and pressure drops for the design tornado are shown in Figure 3.3-1. The relationship between wind velocity and pressure in the design tornado shown in Figure 3.3-1 was developed based on Hoecker's studies of the Dallas tornado of 1957[1,2].

Venting, when used as a design procedure for reducing the tornado-generated differential pressure, is accomplished by using blowoff panels that fail at a lower differential pressure. Upon relief of the differential pressure by the blowoff panel from the exterior wall of a room, the interior walls and slabs of these rooms are designed for the 3 psi pressure differential.

The effective loads on Category I structures due to tornado-generated missiles were determined using the procedures described in Section 3.5.3.

The effect of various combinations of tornado loadings were studied with respect to each Category I structure. The most adverse combination was selected individually for the design basis of each structure.

The tornado loadings are not considered to be coincident with accident or earthquake loadings.

Venting is utilized to reduce the effective tornado-generated differential pressure in portions of the Auxiliary Building. Four hundred square feet of relief panel area are provided in the roof over the spent fuel pool room and cask loading room at Elevation 814.75 for venting purposes during the tornado. The relief panels are held in place by gravity. An upward pressure of 0.25 psi is sufficient to offset the weight of the panels and cause them to be lifted from their nominal positions. Two corners of each panel are chained to the roof to prevent the panel from becoming a missile after it relieves.

The shutdown board room and, in general, the area between columns q and u at Elevation 757.0 is not part of that portion of the Auxiliary Building vented by design; however, the remainder of the building is considered to depressurize due to the vent area provided by the air intake openings and through ventilation penetrations. In addition, the Diesel Generator Building and the ~~ERCW~~ Pumping Station are designed to depressurize due to the vent areas provided by the ventilation openings in those buildings.

Intake

Included in this group are the:

1. ~~Emergency~~ Essential Raw Cooling Water (ERCW) Intake Pumping Station - This station is considered to have sufficient redundance that a single turbine missile strike cannot cause unacceptable damage. The addition of a missile-resistant roof on this structure has further reduced the chance for any damage to this area from turbine missiles.

2. Heating and Ventilating Equipment Installations needed for temperature control of engineered safety features equipment. All installations of this kind are redundant and adequately separated to prevent a loss by single turbine missiles.

3.5.1.3.4 Turbine Missile Protection Criterion

The turbine missile protection criterion utilized in the design of the Watts Bar Nuclear Plant was that the probability of unacceptable damage should not be significant. In this instance, an event having a probability of causing unacceptable damage on the order of about 10^{-7} per year per reactor unit at the plant is not considered significant. Therefore, for the two-unit Watts Bar Nuclear Plant, an event having a probability of occurrence on the order of 2×10^{-7} will fulfill this criterion.

The turbine placement and orientation are shown in Figure 3.5-4. The orientation of the turbine axis is parallel with the containment. With the exception of the ERCW conduit, there are no essential systems or structures located inside the low trajectory missile zones defined in NRC Regulatory Guide 1.115.

For the ERCW conduit target, the strike probability due to a low trajectory turbine missile is considered to be zero since the rotation of the turbine will preclude a tangential missile from directly impacting the ERCW conduit as the turbine pedestal and Turbine Building structure provide barriers to the trajectory.

Although low trajectory missiles are excluded from plant design considerations, a probabilistic analysis has been performed for both low and high trajectory missiles.

3.5.1.3.5 Turbine Missile Hazard Evaluation

The turbine missile hazard evaluation made for the Watts Bar Nuclear Plant considers missiles produced during accidents at or near rated speed and at destructive overspeed. The evaluation also took into account different missile dispersions that are likely to occur for center disc missiles and for end disc missiles. This was done using the expression:

e. Switch panel and power supply for the seismic switch is discussed under Item 4.

4. A triaxial seismic switch (acceleration trigger) installed, adjacent to Item 1a, at Elevation 702.78 on the base slab of the Unit 1 Reactor Building. The seismic switch has a range of 0.025 g to 0.25g, is field adjustable, and is set to actuate contact closure at 0.09g for either horizontal direction and 0.06g for vertical direction (maximum ground acceleration for OBE). Actuation of the switch will activate an annunciator in the main control room. Disturbances greater than 15 Hz will not normally actuate the switch because the switch has a flat response bandwidth of 0.5 Hz to 15 Hz. Refer to Item 8b for details about the annunciator.

5. An active triaxial response spectrum recorder at Elevation 702.78, Unit 1 Reactor Building, adjacent to Item 1a as shown on Figure 3.7-39. Aside from its function to record maximum amplitudes over a set of discrete frequencies within the specified bandwidth of 2-25 Hz, this unit will provide a signal to the annunciator unit in the main control room when the preset acceleration levels are exceeded (hence the term "active"). Details concerning the annunciator are explained in Item 8c.

6. A passive triaxial response spectrum recorder at each of the following locations:

   a. Elevation 756.63, Unit 1 Reactor Building, adjacent to Item 1b as shown in Figure 3.7-40.

   b. Elevation 757, Auxiliary Building, between column 1 lines A8 and A10 as shown in Figure 3.7-40.

   c. Elevation 742, Diesel Generator Building, on the base slab near Item 1c as shown in Figure 3.7-41.

These recorders will monitor 12 frequencies ranging from 2 to 25 Hz.

7. A triaxial peak accelerograph at each of the following locations:

   a. The control room in the Control Building at top of panel 0-M-25 as shown in Figure 3.7-43.

   b. Elevation 725, Unit 1 Reactor Building, mounted on the safety injection system piping as shown in Figure 3.7-44.

   c. Unit 1 Reactor Building, mounted on the residual heat removal ~~annunciator and sequential events recording~~ system piping as shown in Figure 3.7-45.

8. Annunciator lights on Unit 1 of panelboard 1-M-15 in the main control room at Elevation 755, as shown in Figure 3.7-43. by reference

   Activation will alert the operator to one or more of the following conditions:

   a. The strong motion seismic accelerometer recording system has been activated.

   b. The seismic accelerations at the site are equal to or greater than those of the Operating Basis Earthquake.

   c. The preset operating basis earthquake acceleration levels on the active triaxial response spectrum recorder have been exceeded and the peak shock annunciator has been actuated.

The basis for the selection of the Reactor Building for installation of seismic instrumentation is that it is the rock-supported building most important to safety. The basis for the selection of the Diesel Generator Building is that it is the soil-supported building most important to safety. The basis for the selection of the Control Building is that it is a rock-supported structure outside containment.

The location of each peak recording accelerograph was selected based on the following guide lines:

1. Seismic recorders are only located on seismically qualified components in Category I structures.

2. The locations selected represent different building elevations, different mechanical components, and different seismic qualification procedures to the maximum extent feasible.

3. Recorders are located on components, such as vertical runs of pipe or structurally symmetrical equipment, that will, to the maximum extent possible, respond to multidirectional earthquakes.

4. Components were selected so as to be as free as possible from operational transients such as pump starts, fast- acting valves, erratic thermally induced movements, accidental shocks, etc.

5. The mass of the recorder is insignificant relative to the component upon which it is mounted. Installation will not jeopardize any safety function performed by the component.

Procedures for utilization of the data recorded by the above described instrumentation are provided in Section 3.7.4.4.

TABLE 3.8.1-2

(Sheet 1 of 2)

SHIELD BUILDING EQUIPMENT HATCH DOORS AND SLEEVE LOADS, LOADING COMBINATIONS, AND ALLOWABLE STRESSES

Structural

No.	Load Combinations	Allowable Stresses (psi)		
		Tension	Compression****	Shear
I	Dead load plus 2-psi pressure	0.50 F_y	0.47 F_y	0.33 F_y
II	Dead load plus 3-psi pressure inside	0.90 F_y	0.90 F_y	0.60 F_y
III	Dead load plus 2-psi pressure outside plus *OBE	0.60 F_y	0.60 F_y	0.40 F_y
IV	Dead load plus 2-psi pressure outside plus *SSE	0.90 F_y	0.90 F_y	0.60 F_y
**V	Dead load plus *OBE	0.60 F_y	0.60 F_y	0.40 F_y
**VI	Dead load plus *SSE	0.90 F_y	0.90 F_y	0.60 F_y

Mechanical

No.	Load Combinations	Allowable Stresses (psi)(****)	
		Tension & Compression	Shear
**I	Dead load	$\frac{Ult}{5}$	$\frac{2 \times Ult}{15}$
***Ia	Dead load plus* OBE	0.60 F_y	0.40 F_y
***II	Dead load plus *SSE	0.90 F_y	0.60 F_y

TABLE 3.8.3-7

(Sheet 1 of 2)

ESCAPE HATCH - DIVIDER BARRIER FLOOR

LOAD COMBINATIONS - ALLOWABLE STRESSES

Structural Parts - (F_y - 36,000 psi)

No.	Load Combinations	Allowable Stress (psi) Tension	Compression(2)	Shear
	Hatch Closed			
I.	Dead load Live load at 100 lb/ft² Load from latching device	18,000 (0.5 F_y)	18,000 (0.5 F_y)	12,000 (0.33F_y)
III.	Dead load OBE(1)	22,000 (0.6 F_y)	22,000 (0.6 F_y)	14,400 (0.4 F_y)
IIIe	Dead load Live load of 15 psi from below Load from latching device SSE(1)	25,900 (0.72 F_y)	25,900 (0.72 F_y)	17,300 (0.48 F_y)
	Hatch Open			
IV.	Dead load SSE(1)	25,900 (0.72 F_y)	25,900 (0.72 F_y)	17,300 (0.48 F_y)

Mechanical Parts(3) (Excluding Springs)

No.	Load Combinations	Allowable Stress (psi) Tension	Compression(2)	Shear
	Hatch Closed			
I.	Dead load Live load at 100 lb/ft² Load from latching device	$\frac{\text{Ultimate}}{5}$	$\frac{\text{Ultimate}}{5}$	$\frac{2}{3} \times \frac{\text{Ultimate}}{5}$
II.	Dead load Live load of 15 psi from below Load from latching device SSE	0.72 yield	0.72 yield	$\frac{2}{3}$ x 0.72 yield
	Hatch Open			
III.	DEAD LOAD OBE	0.6 F_y	0.6 F_y	0.4 F_y
IV	DEAD LOAD SSE	0.9 F_y	0.9 F_y	0.6 F_y

Table 3.8.3-7

(Sheet 2 Of 2)

ESCAPE HATCH - DIVIDER BARRIER FLOOR

LOAD COMBINATIONS - ALLOWABLE STRESSES

NOTES:

(1) Acts in one horizontal direction only at any given time and acts in vertical and horizontal directions simultaneously.

(2) The value given for allowable compression stress is the maximum value permitted, when buckling does not control. The critical buckling stress, F_{cr}, shall be used in place of F_y when buckling controls.

$$F_{cr} = F_y \left[1 - \frac{\left(\frac{Kl}{r}\right)^2}{2\,C_c^2} \right] \text{ when } \frac{kl}{r} \leq C_c$$

or

$$F_{cr} = \frac{\pi^2 E}{\left(\frac{Kl}{r}\right)^2} \text{ when } \frac{Kl}{r} > C_c$$

(3) Pins and shafts, bolts and nuts, bushings, and seals.

tumble during flight. It is highly unlikely that a tumbling missile could follow the pathways discussed above without being deflected. Therefore, the main steam safety and relief valves are adequately protected from vertical tornado missiles. (See also Figures 3.8.4-49A through 3.8.4-49C).

The main steam, main feedwater, and feedwater bypass isolation valves are located below the safety and relief valves and are further protected from missile damage by five levels of wide flange beams (33-inch to 8-inch size) provided for pipe break restraint and support functions. There are no practical pathways by which tornado missiles could reach these valves. (See Figures 3.8.4-49A through 3.8.4-49C).

3.8.4.1.6 Intake Pumping Station and Retaining Walls

Pumping Station

The intake pumping station is a cellular box-type, reinforced concrete, waterfront structure founded on bedrock and partially backfilled on three sides. On the land side, retaining walls hold back the fill to elevation 710.0. Permanent openings are provided in the reservoir side of the pumping station to allow flooding of any unwatered pump wells when the reservoir level exceeds elevation 690.0. The ~~emergency~~ essential raw cooling water (ERCW) pumps, fire protection pumps, and screen wash pumps are located on the upper deck at elevation 741.0 above the maximum possible flood and is covered by a roof. This deck is completely enclosed by a concrete wall 13 feet high. A wall also supports the structural steel grillage system, shown in Figure 3.8.4-68, which provides tornado missile protection to the equipment below. The raw cooling water pumps are located on the deck at elevation 728.0, which is below the maximum probable flood, but are not required for maintenance of plant safety. The mechanical and electrical equipment are located on the floors at elevation 722.0 and 711.0, respectively. A permanent pedestal crane is mounted above the upper deck at elevation 754.0 for handling of equipment. The structural outline is shown in Figures 3.8.4-50 and 3.8.4-51.

Traveling Water Screens

As shown in Figure 3.8.4-52, the screens are of the single or through flow, automatic cleaning type with a nominal basket width of 4.0 feet.

The capacity of each screen, with a head loss of 6 inches for a clean screen and minimum water depth, is approximately 25,000 gallons per minute at a water velocity of 2.0 feet per second. Basket travel speed is about 10 feet per minute. Removal of trash and refuse from the basket screens is by water sprays located in the head frame.

The drive motor for each screen is sized to start the screen with water at elevation 737.5 and a head loss of 2-feet, 6-inches. All drive components are rated for continuous duty and are suitable for outdoor service.

Timers provided in the control circuits for the screens function to operate the screens for 18 minutes every 60 hours to prevent "freezing" of the machinery parts from nonuse. This provides assurance that the screens are in an operable condition at all times.

The heads of the screens, including drive components, are located above the maximum possible flood level. The screens are designed to operate during any flood, including a maximum possible flood, with water to elevation 737.5 and a 2-foot, 6-inch head loss above elevation 705.0.

The four trains screens are identical with two screens provided for each of the two supply ~~loops~~ at the intake station. Each of the two screens on each supply loop has sufficient capacity to screen the total water required for one train ~~loop~~. The capacity of one supply train ~~loop~~ is sufficient to supply all water required for the ERCW during a LOCA.

Starting of the screens by pressure switches on the spray water assures that adequate spray water for removal of trash is available when the screens are started. This greatly reduces the possibility of carrying trash over the screens and into the screened water.

Concrete Retaining Wall

The earthfill is hold back by two concrete retaining walls from the pumping station to a point 32 feet from the pumping station. The concrete walls are keyed into rock and are separated from the pumping station by expansion joints. For outline of walls, see Figure 3.8.4-53.

Sheet Pile Retaining Walls

The sheet pile walls are parallel and extend from each end of the back of the pumping station toward the main plant. These parallel walls contain earthfill to elevation 710.0 and project above the sloping grade a maximum of 29 feet at the pumping station. For layout of walls, see Figures 3.8.4-54 and 3.8.4-55.

3.8.4.1.7 Miscellaneous ~~Emergency~~ Essential Raw Cooling Water (ERCW) Structures

Slabs and Beams Supporting ERCW Pipes

At the Intake Pumping Station, the ERCW pipes are supported on a reinforced concrete slab. The slab is approximately 8 feet below grade and 50feet above bedrock. The slab is supported by a bracket on the pumping station wall, bearing piles, and undisturbed earth. Structural separation from the pumping station is provided by 1/2-inch of expansion joint material. The slab is shown in Figure 3.8.4-56.

The ERCW pipes at the Diesel Generator Building are encased in concrete beams for support. The pipes are separated from the beams by insulation and the beams is separated from the Diesel Generator Building by expansion joint material. The beams are supported by brackets on the Diesel Generator Building and by Class A backfill. The beams are shown in Figure 3.8.4-56b.

Discharge Overflow Structure

The discharge overflow structure is a reinforced concrete box-type structure supported on granular fill material placed over basal gravel. The function of the discharge overflow structure is to provide for the normal flow rate discharge of the ERCW system without unacceptable back pressure if the downstream pipes are blocked and to permit flow to the holding pond under normal conditions. The structural outline is shown in Figure 3.8.4-46a.

Standpipe Structures

The two standpipe structures are mass reinforced concrete structures placed on firm granular material. The structures have backfill on four sides for the first 8 feet of height and extend 17 feet above grade. The function of these structures is to protect the standpipes from tornado-generated missiles. The structures are shown in Figure 3.8.4-56a.

Valve Covers

These structures consist of reinforced concrete slabs covering the valves in the ERCW pipes. The slabs are located at grade above the pipes and are supported by either the missile protection slab and/or backfill. The slabs have small openings with precast concrete covers above each valve stem. The openings in the missile protecting valve covers provide immediate access to the valves in an emergency. The structures are shown in Figure 3.8.4-56c.

TABLE 3.8.4-7

(Sheet 3 of 5)

PRESSURE CONFINING PERSONNEL DOORS
LOADS, LOADING COMBINATIONS, AND ALLOWABLE STRESSES[1] (Cont'd)

(Doors A55, A57, C20, C26, A101, and A105)

Structural Parts

No.	Load Combinations	Allowable Stresses (psi) Tension	Compression[2]	Shear
	Doors Open			
I	DL + Load from Door Closers	0.50 F_y	0.47 F_y	0.33 F_y
II	DL + OBE + Load from Door Closers	0.60 F_y	0.60 F_y	0.40 F_y
	DL + SSE + Load from Door Closers	0.90 F_y	0.90 F_y	0.60 F_y
	Doors Closed			
IV[3] ~~III[3]~~	DL + CCWS flood + ~~SSE~~ E + 3-psi pressure (bidirectional where applicable)	0.90 F_y	0.90 F_y	0.60 F_y
IV[4]	DL + OBE + Pressure from valve rooms	0.60 F_y	0.60 F_y	0.40 F_y
	DL + SSE + Pressure from valve rooms	0.90 F_y	0.90 F_y	0.60 F_y

1. Thermal load effects are insignificant and hence need not be considered in the design of doors.

2. The values indicated for the allowable compression stresses are the maximum values permitted, when buckling does not control. The critical buckling stress, F_{cr}, shall be used in place of F_y when buckling controls.

$$F_{cr} = F_Y \left[1 - \frac{\left(\frac{Kl}{r}\right)^2}{2\,C_c^2}\right] \text{ when } \frac{kl}{r} \leq c_c$$

or

$$F_{cr} = \frac{\pi^2 E}{\left(\frac{Kl}{r}\right)^2} \text{ when } \frac{Kl}{r} > c_c$$

3. The CCWS flood condition does not apply to doors A101 and A105, and differential pressure load due to tornado need not be considered simultaneously with seismic load.

4. Applies to doors A101 and A105 only.

III[3]	DL + CCWS flood + OBE + 3psi pressure (bidirectional where applicable)	0.6 F_y	0.6 F_y	0.4 F_y

TABLE 3.8.4-23

(Sheet 1 of 2)

WATERTIGHT EQUIPMENT HATCH COVERS

LOADS, LOADING COMBINATIONS, AND ALLOWABLE STRESSES

No.	Load Combination	Allowable Stresses (psi) Tension	Compression*	Shear
Hatch Closed				
I	D + 200 lb/ft^2 live load	$0.6F_y$	$0.6F_y$	$0.4F_y$
II	D + L_1	$0.9F_y$	$0.9F_y$	$0.6F_y$
III	D + L_2	$0.9F_y$	$0.9F_y$	$0.6F_y$
IV	D + L_1 + OBE	$0.6F_y$	$0.6F_y$	$0.4F_y$
V	D + L_2 + SSE	$0.9F_y$	$0.9F_y$	$0.6F_y$

Where:

D - Dead Loads or their related internal moments and forces including permanent equipment

L_1 - Live Load due to flood to El 711.0

L_2 - Live Load due to pressure of 3 psi from below

OBE - Loads due to the operating basis earthquake

SSE - Loads due to the safe shutdown earthquake

* The value indicated for the allowable compression stresses is the maximum value permitted when buckling does not control. The critical buckling stress, F_{cr}, shall be used in place of F_y when buckling controls.

$$F_{cr} = F_Y \left[1 - \frac{\left(\frac{Kl}{r}\right)^2}{2\,C_c^2} \right] \text{ when } \frac{kl}{r} \leq c_c$$

or

$$F_{cr} = \frac{\pi^2 E}{\left(\frac{Kl}{r}\right)^2} \text{ when } \frac{Kl}{r} > c_c$$

shield plugs at the equipment access doors, and any large pieces of equipment going into or out of the Reactor Buildings via the Auxiliary Building.

3.8.6.2.2 Applicable Codes, Standards, and Specifications

The following codes, standards, and specifications were used in the design of the crane:

National Electric Code, 1970 Edition.

NEMA Standard MG1, 1970 Edition.

~~IEEE 279 - 1971, Criteria for Protection Systems for Nuclear Power Generating Stations (Per telecon to IEEE in NJ, this Standard has been withdrawn.)~~

Crane Manufacturers Association of American, Inc., Specification No. 70, 1970 Edition.

Federal Specification RR-W-410C.

ASTM Material Standards, 1974 Edition.

AWS, D1.1-72 with 1973 Revisions, Structural Welding Code.

Section 1.23, Part I, Specification for the Design, Fabrication, and Erection of Structural Steel for Buildings; AISC Manual of Steel Construction, 7th Edition, 1970.

American Gear Manufacturers Association Standards for Spur, Helical, Herringbone, and Bevel Gears.

Where date of edition, copyright, or addendum is specified, earlier versions of the listed documents were not used. In some instances, later revisions of the listed documents were used where design safety was not compromised.

The cranes meet applicable requirements of the listed codes, standards, and specifications.

3.8.6.2.3 Loads, Loading Combinations, and Allowable Stresses

Loads, loading combinations, and allowable stresses are shown in Table 3.8.6-2.

3.8.6.2.4 Design and Analysis Procedure

The bridge girders and end ties for the crane were designed as simple beams in the vertical plane and as a continuous frame in the horizontal plane. Stresses in the girders and end ties were computed with the trolley positioned to produce maximum stresses. Trolley positions used were the maximum end position,

TABLE 3.9-17

(Sheet 1 of 7)

ACTIVE VALVES FOR PRIMARY FLUID SYSTEMS

System Name	TVA Valve No.	W Valve No.	Size Inches	Actuation	Type	Function/Description
Chemical and Volume Control System (62)	FCV-62-61	8112	4	Motor	Gate	Containment Isolation
	FCV-62-63	8100	4	Motor	Gate	Containment Isolation
	FCV-62-69 *	LCV-460	3	Air	Globe	Letdown Isolation
	FCV-62-70 *	LCV-459	3	Air	Globe	Letdown Isolation
	FCV-62-72	8149C	2	Air	Globe	Containment Isolation
	FCV-62-73	8149B	2	Air	Globe	Containment Isolation
	FCV-62-74	8149A	2	Air	Globe	Containment Isolation
	FCV-62-77	8152	2	Air	Globe	Containment Isolation
	FCV-62-84	8145	2	Air	Globe	Aux Spray Isolation
	FCV-62-90	8105	3	Motor	Gate	ECCS Flowpath Integrity
	FCV-62-91	8106	3	Motor	Gate	ECCS Flowpath Integrity
	~~FCV-62-98~~	~~8110~~	~~2~~	~~Motor~~	~~Globe~~	~~ECCS Flowpath Integrity~~
	~~FCV-62-99~~	~~8111~~	~~2~~	~~Motor~~	~~Globe~~	~~ECCS Flowpath Integrity~~
	FCV-62-76		2	Air	Globe	Containment Isolation
	LCV-62-132	LCV-112B	4	Motor	Gate	CVCS Charging Pump Suction
	LCV-62-133	LCV-112C	4	Motor	Gate	CVCS Charging Pump Suction
	LCV-62-135	LCV-112D	8	Motor	GAte	CVCS Charging Pump Suction
	LCV-62-136	LCV-112E	8	Motor	Gate	CVCS Charging Pump Suction
	62-504	8546	8	Self Actuated	Check	CVCS Charging Pump Suction
	62-543 **	8381	3	Self Actuated	Check	Containment Isolation
	62-560 **	8368A	2	Self Actuated	Check	CNTMT Isolation
	62-561 **	8368B	2	Self Actuated	Check	CNTMT Isolation

* Testing not required as part of Inservice Testing Program,

** Testing not required as part of Inservice Testing Program, Testing not required to meet 10 CFR 50 Appendix J, See Table 6.2.4-1.

TABLE 3.9-17

(Sheet 2 of 7)

ACTIVE VALVES FOR PRIMARY FLUID SYSTEMS (Cont'd)

System Name	TVA Valve No.	W Valve No.	Size Inches	Actuation	Type	Function/Description
	62-562 **	8368C	2	Self Actuated	Check	CNTMT Isolation
	62-563 **	8368D	2	Self Actuated	Check	CNTMT Isolation
	62-576 *	8367A	2	Self Actuated	Check	CCP Discharge Header Integrity
	62-577 *	8367B	2	Self Actuated	Check	CCP Discharge Header Integrity
	62-578 *	8367C	2	Self Actuated	Check	CCP Discharge Header Integrity
	62-579 *	8367D	2	Self Actuated	Check	CCP Discharge Header Integrity
	62-638 *	8557	3	Self Actuated	Check	Normal Charging Isolation
	62-640 *	8556	3	Self Actuated	Check	Alternate Charging Isolation
	62-659 *	8378	3	Self Actuated	Check	Normal Charging Isolation
	62-660 *	8379	3	Self Actuated	Check	Alternate Charging Isolation
	62-661 *	8377	2	Self Actuated	Check	Auxiliary Spray Isolation
	62-525	8481A	4	Self Actuated	Check	Prevent Backflow thru Centrifugal Charging Pump
	62-532	8481B	4	Self Actuated	Check	Prevent Backflow thru Centrifugal Charging Pump
INSERT → Safety Injection (63)	FCV-63-1	8812	14	Motor	Gate	Prevent Radioactive Release in Recirc Mode
	FCV-63-3	8813	2	Motor	Globe	Prevent Radioactive Release in Recirc Mode
	FCV-63-4	8814	2	Motor	Globe	Prevent Radioactive Release in Recirc Mode

* Testing not required as part of Inservice Testing Program.

** Testing not required as part of Inservice Testing Program. Testing not required to meet 10 CFR 50 Appendix J. See Table 6.2.4-1.

INSERT Table 3.9-17, Sheet 2 of 7

1-RFV-62-505	3/4	Self	Relief		CCP Suction Relief Valve
1-CKV-62-507	1	Self	Check		CCP Suction Chem Feed Check Valve
1-CKV-62-519	3	Self	Check	X	Recip, CP Discharge Check Valve
1-CKV-62-639	3/4	Self	Check		Seal Water 1-FCV-62-61 Bypass
1-RFV-62-649	2	Self	Relief		Seal Water Hx Relief Valve
1-RFV-62-662	2	Self	Relief		Cntmt Isolation Thermal Relief
1-RFV-62-1220	3/4	Self	Relief		Recip CP Suction Over Pressure
1-RFV-62-1221	3/4	Self	Relief		CCP 1A-A Over Pressure
1-RFV-62-1222	3/4	Self	Relief		CCP 1B-B Over Pressure

TABLE 3.9-17

(Sheet 7 of 7)

Active Valves for Primary Fluid Systems (Cont'd)

System Name	TVA Valve No.	W Valve No.	Size inches	Actuation	Type	Function/Description
	CKV-72-563	9022B	8	Self Actuated	Check	RHR Isolation
	FCV-72-13	---	2	Motor	Globe	Minimum Flow Isolation
	FCV-72-34	---	2	Motor	Globe	Minimum Flow Isolation
	RFV-72-508	9019A	3/4	Self Actuated	Angle	CS Pressure Release
	RFV-72-509	9019B	3/4	Self Actuated	Angle	CS Pressure Release
Residual Heat Removal System (74)	FCV-74-1	8702	14	Motor	Gate	RCS Pressure Boundary Protection
	FCV-74-2	8701	14	Motor	Gate	RCS Pressure Boundary Protection
	FCV-74-3	8700A	14	Motor	Gate	ECCS Flowpath Integrity
	FCV-74-8	8703	10	Motor	Gate	RCS Pressure Boundary Protection
	FCV-74-9	8704	10	Motor	Gate	RCS Pressure Boundary Protection
	FCV-74-12	FCV-610	2	Motor	Gate	RHR Mini-Flow
	FCV-74-21	8700B	14	Motor	Gate	ECCS Flowpath Integrity
	FCV-74-24	FCV-611	2	Motor	Gate	RHR Mini-Flow
	FCV-74-33	8716A	8	Motor	Gate	ECCS Flowpath Integrity
	FCV-74-35	8716B	8	Motor	Gate	ECCS Flowpath Integrity
	RFV-74-505	8708	3	Self Actuated	Relief	RHR Pump Suction
	74-514	8730A	8	Self Actuated	Check	Prevent Backflow thru Nonoperating Train
	74-515	8730B	8	Self Actuated	Check	Prevent Backflow thru Nonoperating Train
	1-74-544		8	Self Actuated	Check	Prevents pump-to-pump Interaction
	1-74-545		8	Self Actuated	Check	Prevents pump-to-pump Interaction
Waste Disposal System (77)	FCV-77-9	9170	3	Air	Diaphragm	Containment Isolation
	FCV-77-10	FCV-1003	3	Air	Diaphragm	Containment Isolation
	FCV-77-16	9159A	3/4	Air	Diaphragm	Containment Isolation
	FCV-77-17	9159B	3/4	Air	Diaphragm	Containment Isolation
	FCV-77-18	9160A	1	Air	Diaphragm	Containment Isolation
	FCV-77-19	9160B	1	Air	Diaphragm	Containment Isolation
	FCV-77-20	9157	1	Air	Diaphragm	Containment Isolation
	FCV-77-127		2	Air	Plug	Containment Isolation
	FCV-77-128		2	Air	Plug	Containment Isolation
	CKV-77-849		3/4	Self Actuated	Check	Containment Isolation
	CKV-77-868		1	Self Actuated	Check	Containment Isolation
	RFV-77-2875		1/2	Self Actuated	Relief	Thermal Relief Valve Penetration X41

Spent Fuel Pool Cooling (78)
INSERT 2

INSERT Table 3.9-17 Sheet 7 of 7

0-CKV-78-509	8	Self	Check	Pump A-A Discharge Check Valve
0-CKV-78-510	8	Self	Check	Pump B-B Discharge Check Valve
0-ISV-78-581	10	Manual	Gate	Standby Pump Train A Suction Isolation Valve
0-ISV-78-582	10	Manual	Gate	Standby Pump Train B Suction Isolation Valve
0-CKV-78-586	8	Self	Check	Pump C-S Discharge Check Valve
0-ISV-78-587	8	Manual	Gate	Standby Pump Train B Discharge Isolation Valve
0-ISV-78-588	8	Manual	Gate	Standby Pump Train A Discharge Isolation Valve

TABLE 3.9-25

(Sheet 5 of 14)

VALVES REQUIRED TO BE ACTIVE FOR DESIGN BASIS EVENTS (Cont'd)

System Name	Valve No.	Size Inches	Actuation	Type	Function/Description
High-Pressure Fire Protection System (26)	FCV-26-240	4	Motor	Gate	Containment isolation
	~~FCV-26-241~~	~~4~~	~~Motor~~	~~Gate~~	~~Containment isolation~~
	~~FCV-26-242~~	~~4~~	~~Motor~~	~~Gate~~	~~Containment isolation~~
	FCV-26-243	4	Motor	Gate	Containment isolation
	~~FCV-26-244~~	~~4~~	~~Motor~~	~~Gate~~	~~Containment isolation~~
	~~FCV-26-245~~	~~4~~	~~Motor~~	~~Gate~~	~~Containment isolation~~
	26-1260	4	Self-actuated	Check	Contaniment isolation
	26-1296	4	Self-actuated	Check	Containment isolation
Ventilation (30)	FCV-30-7	24	Air	Butterfly	Containment Isolation
	FCV-30-8	24	Air	Butterfly	Containment isolation
	FCV-30-9	24	Air	Butterfly	Containment isolation
	FCV-30-10	24	Air	Butterfly	Containment isolation
	FCV-30-14	24	Air	Butterfly	Containment isolation
	FCV-30-15	24	Air	Butterfly	Containment isolation
	FCV-30-16	24	Air	Butterfly	Containment isolation
	FCV-30-17	24	Air	Butterfly	Containment isolation
	FCV-30-19	10	Air	Butterfly	Containment isolation
	FCV-30-20	10	Air	Butterfly	Containment isolation
	FCV-30-37	8	Air	Butterfly	Containment isolation
	FCV-30-40	8	Air	Butterfly	Containment isolation
	FCV-30-50	24	Air	Butterfly	Containment isolation
	FCV-30-51	24	Air	Butterfly	Containment isolation
	FCV-30-52	24	Air	Butterfly	Containment isolation
	FCV-30-53	24	Air	Butterfly	Containment isolation
	FCV-30-56	24	Air	Butterfly	Containment isolation
	FCV-30-57	24	Air	Butterfly	Containment isolation
	FCV-30-58	10	Air	Butterfly	Containment isolation
	FCV-30-59	10	Air	Butterfly	Containment isolation
	1-FSV-30-134*	1	Solenoid	Solenoid	Containment isolation
	1-FSV-30-135*	1	Solenoid	Solenoid	Containment isolation

*Unit 2 valves were deleted under ECN 5663

TABLE 3.9-25

(Sheet 6 of 14)

VALVES REQUIRED TO BE ACTIVE FOR DESIGN BASIS EVENTS (Cont'd)

System Name	Valve No.	Size Inches	Actuation	Type	Function/Description
Air-Conditioning (31)	FCV-31-305	2	Air	Plug	Containment isolation
	FCV-31-306	2	Air	Plug	Containment isolation
	FCV-31-308	2	Air	Plug	Containment isolation
	FCV-31-309	2	Air	Plug	Containment isolation
	FCV-31-326	2	Air	Plug	Containment isolation
	FCV-31-327	2	Air	Plug	Containment isolation
	FCV-31-329	2	Air	Plug	Containment isolation
	FCV-31-330	2	Air	Plug	Containment isolation
Control Air System (32)	1-FCV-32-80	2	Air	Globe	Containment isolation
	2-FCV-32-81	2	Air	Globe	Containment isolation
	1-FCV-32-102	2	Air	Globe	Containment isolation
	2-FCV-32-103	2	Air	Globe	Containment isolation
	1-FCV-32-110	2	Air	Globe	Containment isolation
	2-FCV-32-111	2	Air	Globe	Containment isolation
	1-32-293	2	Self-actuated	Check	Containment isolation
	1-32-303	2	Self-actuated	Check	Containment isolation
	1-32-313	2	Self-actuated	Check	Containment isolation
	2-32-323	2	Self-actuated	Check	Containment isolation
	2-32-333	2	Self-actuated	Check	Containment isolation
INSERT	2-32-343	2	Self-actuated	Check	Containment isolation
Service Air System (33)	1-33-794	1/2	Self-actuated	Check	Containment isolation
	2-33-797	1/2	Self-actuated	Check	Containment isolation
Sampling and Water Quality (43)	FCV-43-2	3/8	Solenoid	Globe	Containment isolation
	FCV-43-3	3/8	Air	Globe	Containment isolation
	FCV-43-11	3/8	Solenoid	Globe	Containment isolation
	FCV-43-12	3/8	Air	Globe	Containment isolation
	FCV-43-22	3/8	Solenoid	Globe	Containment isolation

INSERT Table 3.9-25 Sheet 6 of 14

0-PCV-32-68	1	Motor	Regulating	ERCW Supply Press Cntr to Aux Air Comp A
0-PCV-32-82	2	Air	Globe	Control Air Normal Flow Isol
0-PCV-32-95	2	AirC	Globe	Control Air Normal Flow Isol
0-PCV-32-98	1	Motor	Regulating	ERCW Supply Press Cntr to Aux Air Comp B
0-PCV-32-240	2	Self	Check	Air Dryer Purge Check Valve
0-PCV-32-256	2	Self	Check	Air Dryer Purge Check Valve
0-PCV-32-264	2	Self	Check	Air Dryer Purge Check Valve
0-PCV-32-279	2	Self	Check	Air Dryer Purge Check Valve
0-TCV-32-68A	1/2	Motor	Regulating	Throttle ERCW to Aux Air Comp A
0-TCV-32-68B	3/4	Motor	Regulating	Throttle ERCW to Aux Air Comp A
0-TCV-32-98A	1/2	Motor	Regulating	Throttle ERCW to Aux Air Comp B
0-TCV-32-68B	1	Motor	Regulating	Throttle ERCW to Aux Air Comp B
0-FCV-32-70	1	Motor	Ball	Aux Dryer Purge Control
0-FCV-32-71	1	Motor	Ball	Aux Dryer Purge Control
0-FCV-32-72	1	Motor	Ball	Aux Dryer Purge Control
0-FCV-32-73	1	Motor	Ball	Aux Dryer Purge Control
0-FCV-32-94	1	Motor	Ball	Aux Dryer Purge Control
0-FCV-32-95	1	Motor	Ball	Aux Dryer Purge Control
0-FCV-32-96	1	Motor	Ball	Aux Dryer Purge Control
0-FCV-32-97	1	Motor	Ball	Aux Dryer Purge Control
0-FSV-32-61	1	Solenoid	Gate	ERCW Supply Aux Air Comp A
0-FSV-32-87	1	Solenoid	Gate	ERCW Supply Aux Air Comp B
0-CKV-32-70A	1	Self	Check	Air Dryer Purge Check Valve
0-CKV-32-70B	1	Self	Check	Air Dryer Purge Check Valve
0-CKV-32-70C	1	Self	Check	Air Dryer Purge Check Valve
0-CKV-32-70D	1	Self	Check	Air Dryer Purge Check Valve
0-CKV-32-94A	1	Self	Check	Air Dryer Purge Check Valve
0-CKV-32-94B	1	Self	Check	Air Dryer Purge Check Valve
0-CKV-32-94C	1	Self	Check	Air Dryer Purge Check Valve
0-CKV-32-94D	1	Self	Check	Air Dryer Purge Check Valve

TABLE 3.9-25

(Sheet 7 of 14)

VALVES REQUIRED TO BE ACTIVE FOR DESIGN BASIS EVENTS (Cont'd)

System Name	Valve No.	Size Inches	Actuation	Type	Function/Description
Sampling and Water Quality (43) (Continued)	FCV-43-23	1-1/3	Air	Gate	Containment isolation
	FCV-43-34	3/8	Solenoid	Globe	Containment isolation
	FCV-43-35	3/8	Air	Globe	Containment isolation
	~~FCV-43-54D~~	~~1-1/3~~	~~Air~~	~~Gate~~	~~Containment isolation~~
	FCV-43-55	1-1/3	Air	Gate	containment isolation
	~~FCV-43-56D~~	~~1-1/3~~	~~Air~~	~~Gate~~	~~Containment isolation~~
	FCV-43-58	1-1/3	Air	Gate	Containment isolation
	~~FCV-43-59D~~	~~1-1/3~~	~~Air~~	~~Gate~~	~~Containment isolation~~
	FCV-43-61	1-1/3	Air	Gate	Containment isolation
	~~FCV-43-63D~~	~~1-1/3~~	~~Air~~	~~Gate~~	~~Containment isolation~~
	FCV-43-64	1-1/3	Air	Gate	Containment isolation
	FCV-43-75	3/8	Solenoid	Globe	Containment isolation
	FCV-43-77	3/8	Air	Globe	Containment isolation
	FCV-43-201	3/8	Solenoid	Globe	Containment isolation
	FCV-43-202	3/8	Solenoid	Globe	Containment isolation
	FCV-43-207	3/8	Solenoid	Globe	Containment isolation
	FCV-43-208	3/8	Solenoid	Globe	Containment isolation
	FCV-43-433	3/8	Solenoid	Globe	Containment isolation
	FCV-43-434	3/8	Solenoid	Globe	Containment isolation
	FCV-43-435	3/8	Solenoid	Globe	Containment isolation
INSERT 1	FCV-43-436	3/8	Solenoid	Globe	Containment isolation
Ice Condenser (61)	CKV-61-533	3/8	Self-actuated	Check	Containment isolation
	CKV-61-680	3/8	Self-actuated	Check	Containment isolation
	CKV-61-692	3/8	Self-actuated	Check	Containment isolation
	CKV-61-745	3/8	Self-actuated	Check	Containment isolation
	FCV-61-96	2	Air	Diaphragm	Containment isolation
	FCV-61-97	2	Air	Diaphragm	Containment isolation
	FCV-61-110	2	Air	Diaphragm	Containment isolation
	FCV-61-122	2	Air	Diaphragm	Containment isolation
	FCV-61-191	4	Air	Diaphragm	Containment isolation
	FCV-61-192	4	Air	Diaphragm	Containment isolation
	FCV-61-193	4	Air	Diaphragm	Containment isolation
	FCV-61-194	4	Air	Diaphragm	Containment isolation
Chemical and Volume Control System (62)	FCV-62-1228	1	Air	Diaphragm	Isolation of Hydrogen vent for charging pumps suction side piping
	FCV-62-1229	1	Air	Diaphragm	Isolation of Hydrogen vent for charging pumps suction side piping
Safety Injection System (63)	FCV-63-185	3/4	Air	Globe	Containment Isolation
Emergency Gas Treatment System (65)	INSERT 2				

INSERT 1 Table 3.9-25 Sheet 7 of 14

1-PCV-43-200A	1/4	Self	Regulating	LOCA H2 Cntmt Monitor Press Reg
1-PCV-43-200B	1/4	Self	Regulating	LOCA H2 Cntmt Monitor Press Reg
1-PCV-43-210A	1/4	Self	Regulating	LOCA H2 Cntmt Monitor Press Reg
1-PCV-43-210B	1/4	Self	Regulating	LOCA H2 Cntmt Monitor Press Reg
1-CKV-43-834	1/2	Self	Check	Cntmt Isol PASS Waste Holdup Tank
1-CKV-43-841	1/2	Self	Check	Cntmt Isol PASS Waste Holdup Tank
1-CKV-43-883	1/2	Self	Check	Cntmt Isol PASS Cntmt Air Return
1-CKV-43-884	1/2	Self	Check	Cntmt Isol PASS Cntmt Air Return
1-PREG-43-1470A-A	1/4	Self	Regulating	O2 Reagent Gas for H2 Monitor Press Reg
1-PREG-43-1470B-A	1/4	Self	Regulating	O2 Reagent Gas for H2 Monitor Press Reg
1-PREG-43-1471A-B	1/4	Self	Regulating	O2 Reagent Gas for H2 Monitor Press Reg
1-PREG-43-1471B-B	1/4	Self	Regulating	O2 Reagent Gas for H2 Monitor Press Reg

INSERT 2 Table 3.9-25 Sheet 7 of 14

1-FCV-65-8	8	Air	Butterfly	EGTS Tr A Unit 1 Suction Damper
1-FCV-65-10	24	Air	Butterfly	EGTS Tr A Unit 1 Suction Damper
0-FCV-65-24	8	Air	Butterfly	EGTS Tr A Fan Isolation Damper
0-FCV-65-28A	8	Air	Butterfly	EGTS Tr A Decay Cooling Damper
0-FCV-65-28B	8	Air	Gate	EGTS Tr A Decay Cooling Damper
1-FCV-65-30	24	Air	Butterfly	EGTS Tr B Unit 1 Suction Damper
0-FCV-65-43	8	Air	Butterfly	EGTS Tr B Fan Isolation Damper
0-FCV-65-47A	8	Air	Gate	EGTS Tr B Decay Cooling Damper
0-FCV-65-47B	8	Air	Gate	EGTS Tr B Decay Cooling Damper
1-FCV-65-51	8	Air	Butterfly	EGTS Tr B Unit 1 Suction Damper
1-FCV-65-52	14	Air	Butterfly	Cntmt Annulus Vacuum Fan Isol Dmpr
1-FCV-65-53	14	Air	Butterfly	Cntmt Annulus Vacuum Fan Isol Dmpr
1-PCV-65-81	16	Air	Butterfly	Shield Bldg & Cntmt Annulus Isol Dmpr
1-PCV-65-83	16	Air	Butterfly	Shield Bldg & Cntmt Annulus Isol Dmpr
1-PCV-65-86	16	Air	Butterfly	EGTS Cntmt Annulus Isol Damper
1-PCV-65-87	16	Air	Butterfly	EGTS Cntmt Annulus Isol Damper

TABLE 3.9-25

(Sheet 14 of 14)

VALVES REQUIRED TO BE ACTIVE FOR DESIGN BASIS EVENTS (Cont'd)

System Name	Valve No.	Size Inches	Actuation	Type	Function
Radiation Monitoring (90)	~~1,2-FCV-90-106A~~	~~1-3/4~~	~~Motor~~	~~Gate~~	~~Containment Isolation~~
	~~1,2-FCV-90-106B~~	~~1-3/4~~	~~Motor~~	~~Gate~~	~~Containment Isolation~~
	1,2-FCV-90-107	1-1/2	Motor	Gate	Containment Isolation
Radiation Monitoring (90) (Cont'd)	1,2-FCV-90-108	1-1/2	Motor	Gate	Containment Isolation
	1,2-FCV-90-109	1-1/2	Motor	Gate	Containment Isolation
	1,2-FCV-90-108	1-1/2	Motor	Gate	Containment Isolation
	1,2-FCV-90-109	1-1/2	Motor	Gate	Containment Isolation
	1,2-FCV-90-110	1-1/2	Motor	Gate	Containment Isolation
	1,2-FCV-90-111	1-1/2	Motor	Gate	Containment Isolation
	~~1,2-FCV-90-112A~~	~~1-3/4~~	~~Motor~~	~~Gate~~	~~Containment Isolation~~
	~~1,2-FCV-90-112B~~	~~1-3/4~~	~~Motor~~	~~Gate~~	~~Containment Isolation~~
	1,2-FCV-90-113	1-1/2	Motor	Gate	Containment Isolation
	1,2-FCV-90-114	1-1/2	Motor	Gate	Containment Isolation
	1,2-FCV-90-115	1-1/2	Motor	Gate	Containment Isolation
	1,2-FCV-90-116	1-1/2	Motor	Gate	Containment Isolation
	1,2-FCV-90-117	1-1/2	Motor	Gate	Containment Isolation

1. Foxboro Model E-11 pressure transmitter and Model E-13 differential pressure transmitter.

2. Foxboro Process Control Equipment cabinets.

3. Westinghouse Solid-State Protection System cabinets.

4. Nuclear Instrumentation System cabinets.

5. Safeguards Test Racks.

6. Resistance Temperature Detectors.

7. Power range Neutron Detectors.

8. Reactor trip breakers.

9. Barton Models 332 and 386 differential pressure transmitters.

10. Eagle-21 Process Protection System

Seismic qualification testing of Items 1 through 9 is documented in References [1] through [10]. Reference [10] presents the theory and practice, as well as justification, for the use of single axis sine beat test inputs used in the seismic qualification of electrical equipment. In addition, it is noted that Westinghouse has conducted a seismic qualification "Demonstration Test Program" (reference Letter NS-CE-692, C. Eicheldinger (W), to D. B. Vassallo (NRC), 7/10/75) to confirm equipment operability during a seismic event. This program is documented in References [12] through [15] (Proprietary) and References [16] through [20] (Non-Proprietary). Seismic qualification testing of Item 10 to IEEE 344-1975 is documented in Reference [21], [22], and [23].

The Watts Bar Nuclear Plant complies with paragraph IV, "Conclusions and Regulatory Positions" of the "Mechanical Engineering Branch Report on Seismic Audit of Westinghouse Electrical Equipment." All topical reports have been completed and are included in the reference list. The non-proprietary topical reports have been referenced as a group above. The structural capability of the NIS rack is discussed in References [14], [19], and [24].

The Watts Bar Nuclear Plant does not use the Eagle Signal Timer that is under question by the NRC Staff.

The demonstration test program, in conjunction with the justification for the use of single axis sine beat tests, presented in WCAP-8373, and the original tests, documented in References [2] through [10], meet the requirements of IEEE Standard 344-1975 "IEEE Recommended Practices for Seismic Qualification

TABLE 3.10-3

(Sheet 1 of 35)

WATTS BAR SEISMIC QUALIFICATIONS

Equipment:	Metalclad Switchgear
Equipment Rating:	6.9 kV, 60 Hz, 3-phase
Mounting:	The switchgear was bolted to test table to simulate in-service configuration.
Seismic Test:	The control circuits of the switchgear were energized with 125 VDC and subjected to the following tests: 1. Exploratory tests (Resonant Search)--Consisting of a low level single axis sweep from 1 Hz to 35 Hz at a rate of two octaves per minute and at a level of 0.2 g per peak. Resonant search test was performed in the front-to-front and side-to-side orientation. 2. Proof Test-Consisting of biaxial multifrequency random tests in front-to-back and side-to-side orientations. More than 5 OBE'S and one SSE were performed in each orientation.
Monitoring:	A multichannel recorder was used to monitor electrical continuity contact chatter and change of state before, during, and after tests.
Results:	The specimen's structural integrity was not compromised and circuit continuity was maintained.
Reference:	Wyle Laboratories Report No. ~~42659-1, RA~~ 42868-1

Containment Radioactive Gas Monitor

Radioactive gas resulting from leakage of primary coolant into the containment atmosphere is monitored by the Containment Building lower compartment (or back-up upper compartment) air monitor system; the detector is a beta scintillator. The response time is dependent on the leakage rate, normal baseline leakage, and the amount of gaseous fission product activity in the coolant.

The monitors will support detection of 1 gpm abnormal leakage within 1 hour assuming no baseline leakage. This supports the requirements of Regulatory Guide 1.45.

5.2.7.5.2 Reactor Building Floor and Equipment Drain (RBF&ED) Pocket Sump

The RBF&ED pocket sump instrumentation sensitivity and response time is such that the instrumentation will respond to an inflow rate of 1 gpm in less than 1 hour. The instrumentation samples the sump level continuously while the plant computer converts this data to a level change rate (inches/hr). This level change rate is then correlated to a sump inflow rate (gpm).

5.2.7.5.3 Humidity Monitors

The humidity detector system is sensitive to leakage of the order of 2 to 10 gpm depending on the cooling water temperature, containment air temperature variation, and containment air recirculation rate. It is also sensitive to both radioactive and nonradioactive discharge. The humidity detector has a sensitivity of ±2% absolute humidity. Response time for the system ranges from approximately 10 minutes for a 10 gpm leak to about 50 minutes for a 2 gpm leak. The system is an indirect indication of leakage to the containment, in accordance with NRC Regulatory Guide 1.45, paragraph c.3.

If the humidity monitor detects an increase in containment moisture without a corresponding increase in activity level, the indicated source of leakage would be judged to be a nonradioactive system except when the reactor coolant activity level may be low.

5.2.7.5.4 Temperature Monitors

The temperature sensors have an accuracy of ±2°F. Their sensitivity and response time is dependent on the distance of the sensor from the leak and the amount of mixing of the containment atmosphere. The temperature sensors are an aid in determining the location of a leak from a high temperature system.

5.2.7.6 Seismic Capability

The containment air particulate monitors and the containment radioactive gas monitors have the capability to remain functional during and after a safe shutdown earthquake. The component cooling system liquid effluent monitors and the RBF&ED pocket sump level monitor are maintained as Seismic Category I(L) and are not provided with 1E power. The temperature and humidity detection sensor instrumentation is seismically qualified to 1(L). The steam generator blowdown liquid monitors and the condenser vacuum pump air exhaust monitors, which are located in the Turbine Building, are not seismically qualified. The vertical scale indicators, (with the exception of those located on the containment air particulate monitor and containment radioactive gas monitor ratemeters, which are Seismic ~~class 1E~~), recorders, and annunciators associated with all leakage detecting monitors are not seismically qualified.

Category 1E

2. To reduce the concentration of radioactive nuclides in annulus air that is released to the environs during a LOCA in either reactor unit to levels sufficiently low to keep the site boundary and low population zone (LPZ) dose rates below the 10 CFR 100 values.

3. To withstand the safe shutdown earthquake.

4. To provide for initial and periodic testing of the system capability to function as designed.

6.2.3.1.3 Auxiliary Building Gas Treatment System (ABGTS)

The design bases for the ABGTS are:

1. To establish and keep an air pressure that is below atmospheric within the portion of the buildings serving as a secondary containment enclosure during accidents.

2. To reduce the concentration of radioactive nuclides in air releases from the secondary containment enclosures to the environs during accidents to levels sufficiently low to keep the site boundary and LPZ dose rates below the 10 CFR 100 guideline values.

3. To minimize the spreading of airborne radioactivity within the Auxiliary Building following an accidental release in the fuel handling and waste packaging areas.

4. To withstand the safe shutdown earthquake.

5. To provide for initial and periodic testing of the system capability to function as designed.

6.2.3.2 System Design

6.2.3.2.1 Secondary Containment Enclosures

1. Shield Building

The principal components that function collectively to form a secondary containment barrier around the steel primary containment vessel are the Shield Building itself, the Shield Building penetration seals, the isolation valves installed in the penetrations to the Shield Building, and the Shield Building penetration leakoff facilities.

Structure

The Shield Building is a reinforced concrete structure that encloses the reactor's steel primary containment structure; it has a circular horizontal cross section and a shallow domed roof. The vertical center line of this building is also the vertical center line of the steel primary containment vessel. The inside diameter of this building was sized to provide an annular shaped air space between the two reactor enclosures that is five feet wide. The total enclosed free air space between the two enclosures is approximately ~~375,000~~ 396,000 cubic feet. Additional data on the Shield Building is provided in Section 3.8.1 and in Table 6.2.3-1.

related function after the need for containment isolation has been established. Because of this, the annulus vacuum control subsystem is not classified as an engineered safety feature.

This subsystem has two independently controlled branches. Each branch serves one reactor unit. These branches draw air from their assigned annuli and release it into the Auxiliary Building exhaust duct system. The air inlet for each branch is centrally located in the secondary containment volume above the steel containment dome. During the interim period when Unit 2 is under construction, the Unit 2 annulus vacuum control subsystem is isolated from the Unit 1 subsystem by means of blank-off plates located at the fan discharge.

Air pressure control in each secondary containment annulus is achieved with a redundant fan, differential pressure sensor, motor operated damper and control circuitry installation incorporated into each branch. This equipment provides a capability to vary the volumetric flow rate drawn from the annulus to keep the pressure at a predetermined negative pressure level. This control function is accomplished with a modulating damper under control of a differential pressure sensor that adjusts the amount of outside air introduced upstream of a constant capacity fan in the proper manner to keep the annulus pressure within a designated narrow range. Two independent installations of these items are provided to promote operational efficiency. One of the two is utilized as a standby redundant unit that starts automatically in the event the operating control unit fails to function in the proper manner.

The fans and flow control dampers serving both reactor secondary containment annuli are installed in an Auxiliary Building room at elevation 757' adjacent to the Unit 2 Shield Building.

The nominal negative pressure ~~setpoint~~ for each annulus vacuum control equipment installation is five inches of water gauge below atmospheric. The negative pressure level chosen for normal operation ensures that the annulus pressure will not reach positive values during the annulus pressure surge produced by a LOCA in the primary containment. Two 100% capacity fans per reactor unit are utilized to maintain this negative pressure. One fan per unit is normally on standby.

Air Cleanup Subsystem

The air cleanup subsystem is a redundant, shared airflow network having the capability to perform two functions for the affected reactor secondary containment during a LOCA. One of these is to keep the secondary containment annulus air volume below atmospheric pressure. The second function is to remove airborne particulates and vapors that may contain radioactive nuclides from air drawn from the annulus. Each of these is accomplished by this subsystem without disturbing operation of the unaffected reactor unit.

Both of these functions are performed by processing and controlling a stream of air taken from the affected reactor unit secondary containment annulus. The air cleanup operation is conducted by drawing the air stream through a series of filters and adsorbers. Annulus air pressure control is accomplished by adjusting the fraction of the airstream that is returned to the annulus air space. During the interim period when Unit 2 is under construction, the EGTS ductwork which exhausts air from the Unit 2 annulus is isolated from the air cleanup units by means of locked-closed isolation valves, while the supply ductwork is isolated by blank-off plates.

The negative pressure control setpoint chosen for post-accident operation is low enough that leakage across the boundary is into the annulus from both the primary containment and areas adjacent to the Shield Building. The minimum negative pressure in the annulus meets the requirements of NUREG-0800. The pressure differentials produced by wind effects are also overcome by appropriate selection of the annulus negative pressure level.

The rated capacity of each redundant air cleanup unit in the subsystem is 4000 cfm. This subsystem of the EGTS is classified as an engineered safety feature.

The air flow network for the air cleanup subsystem was designed to provide the redundant services needed for either reactor secondary containment annulus. The intakes and ducting in this network used to bring annulus air to the EGTS room on elevation 757' in the Auxiliary Building are those also used by the annulus vacuum control subsystem. The intake is centrally located within each Shield Building above the steel containment dome. Within the EGTS room the network branches out in a manner to supply two air cleanup unit installations that can be aligned with flow control dampers to serve either annulus air volume. After the air is processed, the air cleanup subsystem air flow network directs the air to redundant damper controlled flow dividers in each reactor unit annulus. At these points, the flow network contains two air flow paths leading to the reactor unit vent and two air flow paths to a manifold that distributes and releases the air uniformly around the bottom of the annulus. The vertical separation between the intake above the dome and the exhaust ports in the manifold is 168-3/4 feet. Butterfly valves, rather than dampers, are installed in the ducts just above the flow distribution manifold to minimize the outside air inleakage from the reactor unit vents into the annulus.

Another feature incorporated into the air cleanup subsystem air flow network is the capability to cool the filters and adsorbers in an inactive air cleanup unit that is loaded with radioactive material. This is accomplished with two cross-over flow ducts that can draw air at 200 cfm from the active air cleanup unit through the inactive air cleanup unit. (Such an air flow is sufficient to keep the temperature rise through a fully loaded inactive air cleanup unit to less than 75°F.) Two butterfly valves in series are installed in each cross-over air flow path to assure sufficient isolation to perform accurate removal efficiency tests on the HEPA filter and carbon absorber banks. INSERT

This feature is provided in the event excessive adsorber bed temperature occurs following the failure of an operating EGTS train. Adsorber bed temperature is recorded in the main control room and status indication of each EGTS train is also provided. Upon failure of an operating EGTS train, adsorber bed temperature is monitored to detect subsequent temperature rise. ~~Should the temperature begin to rise significantly above the normal operating temperature, the suction valve from the affected annulus to the inactive AGU is remotely opened by the operator from the main control room to establish a flow path through the failed air cleanup unit.~~

The two air cleanup units in the air cleanup subsystem are stainless steel housings containing air treatment equipment, samples, heaters, drains, test fittings, and access facilities for maintenance. See Section 6.5.1.2.1 for a description of the air cleanup units and information related to their design.

INSERT Page 6.2.3-8, End of Paragraph 4

After a Phase A containment isolation signal has initiated EGTS operation, the control room operator will shut one of the two EGTS trains down and align the appropriate butterfly valves for automatic operation. In addition, the associated suction valve is remotely opened from the main control room to establish a flow path from the affected annulus through the air cleanup unit.

6.2.3.3.3 Auxiliary Building Gas Treatment System (ABGTS)

The ABGTS has the capabilities needed to preserve safety in accidents as severe as a LOCA. This was determined by conducting functional analyses of the system to verify that the system has the proper features for accident mitigation which consist of a failure modes and effects analysis, a review of Regulatory Guide 1.52 sections to assure licensing requirement conformance, and a performance analysis to verify that the system has the desired accident mitigation capabilities. A detailed failure modes and effects analysis is presented in Table 6.2.3-3.

The functional analyses conducted on the ABGTS have shown that:

1. The air intakes for the system are properly located to minimize accident effects. The use of the air intakes provided in the fuel handling and waste disposal areas minimizes the spread of airborne contamination that may be accidentally released at these positions in which the probability of an accidental release, e.g., a fuel handling accident, is more likely. This localization effect is provided without reducing the effectiveness of the system to cope with multiple activity released throughout the ABSCE that may occur during a LOCA. Such coverage is accomplished by utilizing the normal ventilation ducting to draw outside air inleakage from any point along the secondary containment enclosure to the fuel handling and waste disposal areas.

2. Accident indication signals are utilized to bring the ABGTS into operation to assure that the system functions when needed to mitigate accident effects. All accidents in which this system is needed to preserve safety are automatically detected by at least one of the three instrumentation sets used to generate accident signals that result in system startup.

3. System startup reliability is very high. The practice of allowing the automatic startup of either, or both, full capacity trains in the system gives greater assurance that one train of equipment functions upon receipt of an accident signal.

4. The method adopted to establish and keep the negative pressure level within this secondary containment enclosure minimizes the time needed to reach the desired pressure level. Initially, the full capacity of the ABGTS fans is utilized for this purpose. After reaching the desired operating level, the system control module allows outside air to enter the air flow network just upstream of the fan at a rate to keep the fans operating at full capacity with the enclosed volume at the desired negative pressure level. In this situation, the amount of air withdrawn from the enclosed volume is equal to the amount of outside air inleakage through the ABSCE. In addition, two vacuum breaker dampers in series are provided to admit outside air in case the modulating dampers fail.

5. The ABSCE is maintained at a slightly negative pressure to reduce the amount of unprocessed air escaping from this secondary containment enclosure to the atmosphere to insignificant quantities. In addition, this negative pressure level is less than that which is maintained within the annulus; such that, any air leakage between the Auxiliary Building and the Shield Building is from the Auxiliary Building into the Shield Building.

6.2.3.4.2. Auxiliary Building Gas Treatment System (ABGTS)

Preoperational testing of the ABGTS is conducted to verify that the ABGTS has the capabilities needed to reduce radioactive releases from the ABSCE to the environment during an accident to levels sufficiently low to keep the site boundary dose rates below the requirements of 10 CFR 100. Included in the test scope are functional tests on all system instrumentation, controls, and alarms. The tests are structured to accomplish the following:

1. Verify the startup and control capabilities of the system, considering a single operating component failure.

2. Verify the capability of the air flow control modules to create and maintain a negative pressure within the ABSCE.

3. Verify that ABSCE infiltration is less than or equal to the design value at the design negative pressure level considering a postulated failure of a non-safety related component.

4. Verify that the air cleanup units meet requirements specified in Regulatory Guide 1.52. Refer to Section 6.5.1.4.2 for further information related to tests applicable to the air cleanup units.

The periodic test program for the ABGTS fans and air cleanup units is described in the Technical Specifications. A periodic test is performed to verify that the ABGTS can maintain the ABSCE at a negative pressure between -0.25 and -0.5 inches of water with respect to atmospheric pressure. This test also verifies that the ABSCE inleakage rate is less than or equal to ~~6300~~ 7930 cfm while the ABSCE is being maintained at the negative pressure described above. A verification of system flow capacity and ABSCE inleakage rate at the specified negative pressure is adequate to confirm that the calculated depressurization time is conservative.

6.2.3.5 Instrumentation Requirements

6.2.3.5.1 Emergency Gas Treatment System (EGTS)

The air flow control instrumentation requirements for the EGTS are described in Section 6.2.3.2.2. Instrumentation associated with the air cleanup units is discussed in Section 6.5.1.5.1. The logic, controls, and instrumentation of this engineered safety feature system are such that a single failure of any component does not result in the loss of functional capability for the system.

6.2.3.5.2 Auxiliary Building Gas Treatment System (ABGTS)

Instrumentation required for the air flow control modules and air cleanup units are discussed in Section 6.2.3.2.3. Instrumentation associated with the air cleanup units is discussed in Section 6.5.1.5.2. The logic, controls, and instrumentation of this engineered safety feature system are such that a single failure of any component does not result in the loss of functional capability for the system.

TABLE 6.2.3-2

(Sheet 2 of 8)

FAILURE MODES AND EFFECTS ANALYSIS (Cont'd)

EMERGENCY GAS TREATMENT SYSTEM

	COMPONENT IDENTIFICATION	FUNCTION	FAILURE MODE	POTENTIAL CAUSE	METHOD OF FAILURE DETECTION	EFFECT ON SYSTEM	EFFECT ON PLANT	REMARKS
4.	(Cont'd)		Closed when by-pass cooling is required	Valve failure	Valve position indicating light in the MCR	See remark	None	Bypass cooling provision will not be used unless ACU fails and enough heat is generated by radioactivity which is collected on HEPA and charcoal adsorber to raise the charcoal bed temperature significantly. Therefore, a second failed closed isolation valve need not be postulated.
4a.	2-FCV-65-7 (for Unit 2)	Same as Item 4 except flow path is from Unit 2	Same as Item 4	Same as Item 4	Same as Item 4	Same as Item 4 except ACU A-A becomes ACU B-B and ACU B-B becomes ACU A-A	Same as Item 4	Same as Item 4 except A-A becomes B-B and valve on Fan B-B (0-FV-65-43) is closed.
5.	A train isolation valves (2) at EGTS Train B suction 1-FCV-65-51 (for Unit 1)	Provide decay heat cooling path for B-B ACU when A-A ACU is operating for Unit 1 (valve open by operator action)	Open when ACU B-B is in operation	Valve failure	Valve position indicating light in the MCR	Parallel flow path to ACU B-B is open	None	Additional flow path is available which causes no adverse effect.
			Open when ACU B-B is in standby	Valve failure	Valve position indicating light in the MCR	Negative pressure on ACU B-B by suction of ACU Fan A-A	None	Valve on Fan B-B discharge side (0-FCV-65-43) closes when ACU B-B is in standby and will prevent backflow.
			Closed when bypass cooling is required	Valve failure	Valve position indicating light in the MCR	See remark on Item 4	None	Same as Item 4.
5a.	2-FCV-65-50 * (for Unit 2)	Same as Item 5 except flow path is from Unit 2	Same as Item 5	Same as Item 5	Same as Item 5	Same as Item 5 except ACU B-B becomes ACU A-A and ACU A-A becomes ACU B-B	Same as Item 5	Same as Item 5 except B-B becomes A-A and Valve 0-FCV-65-24 closes.

TABLE 6.2.3-2

(Sheet 5 of 8)

FAILURE MODES AND EFFECTS ANALYSIS (Cont'd)

EMERGENCY GAS TREATMENT SYSTEM

	COMPONENT IDENTIFICATION	FUNCTION	FAILURE MODE	POTENTIAL CAUSE	METHOD OF FAILURE DETECTION	EFFECT ON SYSTEM	EFFECT ON PLANT	REMARKS
9.	Shield building exhaust isolation dampers 1-FCO-65-26 1-FCO-65-27 (2-FCO-65-45) (2-FCO-65-46)	Open air path for EGTS exhaust to be discharged to either shield building vent and recirculated air flow to either annulus	One damper is closed when EGTS fan is operating	Damper failure	Damper position indicating light in the MCR	None	None	Damper in parallel flow path is open.
10.	EGTS inlet flow elements (2) 1-FE-65-54 (2-FE-65-3)	Senses flow to EGTS and records flow in MCR	No signal	Flow element failure	Low flow is recorded in MCR	None (see remark)	None	These components are not required for accident mitigation. They are located in the system flow path to provide additional flow information to the operator. No control function.
11.	Annulus Recirc. & Shield building exhaust flow elements ~~**~~ 1-FE-65-84 & 85 1-FE-65-78 & 79 (2-FE-65-84 & 85) (2-FE-65-78 & 79)	Indicates air flow to outside or to the annulus ring header	False signal	Flow element failure	Flow indication in the MCR	None (see remark)	None	These components are not required for accident mitigation. They are located in the system flow path to provide additional flow information to the operator. No control function.

TABLE 6.2.3-2

(Sheet 8 of 8)

FAILURE MODES AND EFFECTS ANALYSIS (Cont'd)

EMERGENCY GAS TREATMENT SYSTEM

	COMPONENT IDENTIFICATION	FUNCTION	FAILURE MODE	POTENTIAL CAUSE	METHOD OF FAILURE DETECTION	EFFECT ON SYSTEM	EFFECT ON PLANT	REMARKS
19.	Flow elements (2) 0-FS-65-31B/A 0-FS-65-55B/A	Starts EGTS standby ACU unit upon loss of flow in normally operating ACU unit	Loss of flow at the operating unit	Valve or instrument failure	Redundant ACU starts	Momentary decrease in flow from annulus	None	Redundant ACU starts on low flow at the operating unit.
20.	Flow elements (2) 0-FS-65-25A/B 0-FS-65-44A/B	Shuts off relative humidity heater on low air flow and alarm in MCR	Spurious signal	Flow element failure	Low flow and Hi-temperature alarms in the MCR	Humidity heater may stay on after EGTS fan stops	None	The EGTS fan can be stopped either by operator action or fan failure, which is a single failure. The other EGTS fan is available to function. The heater is controlled by temperature switches; therefore, the spurious signal of the flow element has no effect.
21.	Flow elements (2) 0-FS-65-25B/A 0-FS-65-44B/A	Opens decay heat removal isolation valves on idle ACU when high flow is sensed at the operating unit	No flow from decay heat removal cooling bypass	Valve or instrument failure	Valve position indicating light in the MCR	See remark on Item 16	None	See remark on Item 16, except second failure of valve or instrument need not be considered.

* Valve 2-FCV-65-50 has been replaced with a steel plate to isolate Unit 1 operational boundary.

** Flow elements 1-FE-65-54, 78, 84, and 85 have been abandon in place; Flow elements 1 & 2-FE-65-79 have been deleted; Flow indicators 2-FI-65-78, 84, and 85 have been deleted, hence making their associated FEs non-functional.

Table 6.2.3-3

(Sheet 1 of 26)

FAILURE MODES AND EFFECTS ANALYSIS FOR THE ABGTS

ITEM NO.	COMPONENT	FUNCTION	FAILURE MODE	POTENTIAL CAUSE	METHOD OF DETECTION	EFFECT ON SYSTEM	EFFECT ON PLANT	REMARKS
1	Auxiliary Building Isolation (ABI) signal Train A	Deenergizes solenoid valves to close associated dampers and establish AB secondary containment enclosure; stops AB general ventilation fans; starts various ESF room coolers; starts ABGTS fans to maintain negative pressure in the ABSCE and remove contaminants from the ABSCE air prior to discharge to atmosphere.	Signal fails.	Train A vital ac bus failure; Relay VKA1 failure; Train A initiating signal (Phase A containment isolation, high rad in refueling area, ~~high rad in aux. building general exh. vent,~~ high temp. in aux. building general supply duct) failure.	MCR indication of only one train ABGTS fan starting and one train of ABSCE dampers closing.	Loss of redundancy in ABSCE isolation and in ABGTS until operator starts Train A ABGTS manually from MCR, after ascertaining that Train B ABI signal is not spurious.	None.	Train A and Train B ABI initiating signals are derived from independent (train-separated) qualified devices ~~except for high radiation signal in the aux. building general exh. vent. This is acceptable on the basis that the high radiation signal from the refueling area serves the same function and that the failure of the non-qualified signal cannot prevent the other initiating signals from generating an ABI signal~~.
			Spurious signal.	Operator error, spurious initiating signal (initiating signals listed above).		Unnecessary isolation of ABSCE and actuation of ABGTS.	None.	

Table 6.2.3-3

(Sheet 2 of 26)

FAILURE MODES AND EFFECTS ANALYSIS FOR THE ABGTS

ITEM NO.	COMPONENT	FUNCTION	FAILURE MODE	POTENTIAL CAUSE	METHOD OF DETECTION	EFFECT ON SYSTEM	EFFECT ON PLANT	REMARKS
2	Auxiliary Building Isolation (ABI) signal Train B	Deenergizes solenoid valves to close associated dampers and establish AB secondary containment enclosure; stops AB general ventilation fans; starts various ESF room coolers; starts ABGTS fans to maintain negative pressure in ABSCE and remove contaminants from the ABSCE air prior to discharge to atmosphere.	Signal fails.	Train B vital ac bus failure; Relay VKBI failure; Train B initiating signal (Phase A containment isolation. high rad in refueling area, ~~high rad in aux. building general exh. vent,~~ high temp. in aux. building general supply duct) failure.	MCR indication of only one train ABGTS fan starting and one train of ABSCE dampers closing.	Loss of redundancy in ABSCE isolation and in ABGTS until operator starts Train B ABGTS manually from MCR, after ascertaining that Train A ABI signal is not spurious.	None.	Train A and Train B ABI initiating signals are derived from independent (train-separated) qualified devices, ~~except for high radiation signal in the aux. building general exh. vent. This is acceptable on the basis that the high radiation signal from the refueling area serves the same function and that the failure of the non-qualified signal cannot prevent the other initiating signals from generating an ABI signal.~~
			Spurious signal.	Operator error, spurious initiating signal (initiating signals listed above).		Unnecessary isolation of ABSCE and actuation of ABGTS.	None.	

Table 6.2.3-3

(Sheet 3 of 26)

FAILURE MODES AND EFFECTS ANALYSIS FOR THE ABGTS

During an ABI

ITEM NO.	COMPONENT	FUNCTION	FAILURE MODE	POTENTIAL CAUSE	METHOD OF DETECTION	EFFECT ON SYSTEM	EFFECT ON PLANT	REMARKS
3	ABGTS Exhaust Fan A-A	Draws a portion of air in the ABSCE through an air cleanup unit (ACU) to remove radioactive contaminants and discharge into the shield building exhaust vent to maintain a negative pressure in the ABSCE relative to the outside.	Fails to start or fails to run.	Mechanical failure; Train A power failure; Train A ABI signal (HS in A-Auto).	Indicating light in MCR.	Loss of redundancy in ABGTS.	None. ABGTS Fan B-B can perform the functions of maintaining the ABSCE at a negative pressure and removing contaminants.	Handswitches for ABGTS Fans A-A and B-B in the MCR should normally be in the A-Auto position. On an ABI signal, both fans start and the operator may stop one fan and place its handswitch in the P-Auto (pull-out) position. This mode of operation is expected to occur after 30 minutes of two fan operation. The fan in the P-Auto mode will start automatically on ~~low flow from the operating fan.~~ An alarm is provided for the condition when flow is inadequate 45 seconds after fan start.
			Starts spuriously.	Spurious Train A ABI signal (HS in A-Auto); spurious low flow signal from Fan B-B after valid ABI signal (HS in P-Auto).	See "Remarks" column.	Vacuum relief line dampers may open to prevent excessive negative pressure in ABSCE by admitting outside air.	None.	Status monitor light and ind. light in MCR provide indication to operator that fan is running. However, if only one ABGTS train starts when both fans are in A-Auto or if the fan in P-Auto starts, the operator cannot determine whether the signal is valid or spurious (no detection of spurious operation). This is acceptable since there is no impact on plant safety without a second failure (e.g., failure of a vacuum relief damper).

insufficient negative pressure in the ABSCE relative to the outside.

Table 6.2.3-3

(Sheet 4 of 26)

FAILURE MODES AND EFFECTS ANALYSIS FOR THE ABGTS

During an ABI

ITEM NO.	COMPONENT	FUNCTION	FAILURE MODE	POTENTIAL CAUSE	METHOD OF DETECTION	EFFECT ON SYSTEM	EFFECT ON PLANT	REMARKS
4	ABGTS Exhaust Fan B-B	Draws a portion of air in the ABSCE through an air cleanup unit (ACU) to remove radioactive contaminants and discharge into the shield building exhaust vent to maintain a negative pressure in the ABSCE relative to the outside.	Fails to start or fails to run.	Mechanical failure; Train B power failure; Train B ABI signal failure (HS in A-Auto).	Indicating light in MCR.	Loss of redundancy in ABGTS.	None. ABGTS Fan A-A can perform the functions of maintaining the ABSCE at a negative pressure and removing contaminants.	Handswitches for ABGTS Fans A-A and B-B, in the MCR should normally be in the A-Auto position. On an ABI signal, both fans start and the operator may stop one fan and place its handswitch in the P-Auto (pull-out) position. This mode of operation is expected to occur after 30 minutes of two fan operation. The fan in the P-Auto mode will start automatically on ~~low flow from the operating fan.~~ An alarm is provided for the condition when flow is inadequate 45 seconds after fan start.
			Starts spuriously.	Spurious Train B ABI signal (HS in A-Auto); spurious low flow signal from Fan A-A after valid ABI signal (HS in P-Auto).	See "Remarks" column.	Vacuum relief line damper/s may open to prevent excessive negative pressure in ABSCE by admitting outside air.	None.	Status monitor light and ind. light in MCR provide indication to operator that fan is running. However, if only one ABGTS train starts when both fans are in A-Auto or if the fan in P-Auto starts, the operator cannot determine whether the signal is valid or spurious (no detection of spurious operation). This is acceptable since there is no impact on plant safety without a second failure (e.g., failure of a vacuum relief damper).

insufficient negative pressure in the ABSCE relative to the outside.

Table 6.2.3-3

(Sheet 24 of 26)

FAILURE MODES AND EFFECTS ANALYSIS FOR THE ABGTS

ITEM NO.	COMPONENT	FUNCTION	FAILURE MODE	POTENTIAL CAUSE	METHOD OF DETECTION	EFFECT ON SYSTEM	EFFECT ON PLANT	REMARKS
41	ABGTS Vacuum Relief Line Isolation Damper 0-FCO-30-280 Train A	Provides flow path for outside air.	Fails to open, stuck closed, or spuriously closes.	Mechanical failure; Train A power failure; Train A aux. control air failure; operator error (HS in wrong position).	Indicating light in MCR.	Aux. Bldg. at more negative pressure (lower absolute pressure) than required to prevent leakage from outside.	None. See "Remarks" column.	Dampers 0-FCO-30-279 and 0-FCO-30-280 are provided with train-separated, safety-grade auxiliary control air. In addition, there are two vacuum breaker dampers, 0-DMP-30-1128 and 0-DMP-30-1129 in series which will admit outside air into the Bldg in case of increasing vacuum,
			Fails to close, stuck open, or spuriously opens.	Mechanical failure; operator error (HS in wrong position).	Indicating light in MCR.	None. Modulating Damper 0-FCO-30-149 can independently control amount of outside air.	None.	
42	ABGTS Vacuum Relief Line Isolation Damper 0-FCO-30-279 Train B	Provides flow path for outside air.	Fails to open, stuck closed, or spuriously closes.	Mechanical failure; Train B power failure; Train B aux. control air failure; operator error (HS in wrong position).	Ind. light in MCR.	Aux. Bldg. at more negative pressure (lower absolute pressure) than required to prevent leakage from outside.	None. See "Remarks" column.	Dampers 0-FCO-30-279 and 0-FCO-30-280 are provided with train-separated, safety-grade auxiliary control air. In addition, there are two vacuum breaker dampers, 0-DMP-30-1128 and 0-DMP-30-1129 in series which will admit outside air into the Bldg in case of increasing vacuum,
			Fails to close, stuck open, or spuriously opens.	Mechanical failure; operator error (HS in wrong position).	Indicating light in MCR.	None. Modulating Damper 0-FCO-30-148 can independently control amount of outside air.	None.	

TABLE 6.2.3-3

Failure Modes and Effects Analysis for the ABGTS (Continued)

Item No.	Component	Function	Failure Mode	Potential Cause	Method of Detection	Effect on System	Effect on Plant	Remarks
50	AUX. BLDG. VACUUM RELIEF DAMPER 0-~~XFD~~-30-1128 DMP	PROVIDES FLOW PATH FOR OUTSIDE AIR	FAILS TO OPEN, STUCK CLOSED	MECHANICAL FAILURE	VISUAL	AUX. BLDG AT MORE NEGATIVE PRESS. (LOWER ABSOLUTE PRESS.) THAN REQ'D TO PREVENT LEAKAGE TO OUTSIDE	NONE	THIS DAMPER WILL ONLY BE USED IN THE EVENT THAT ISOLATION DAMPERS 0-30-279 AND 0-30-280 FAIL CLOSE. THEREFORE FOR THIS DAMPER TO FAIL CLOSE, AND ONE OF THE ISOLATION DAMPERS TO FAIL CLOSE AT THE SAME TIME WOULD CONSTITUTE A DOUBLE FAILURE.
			FAILS TO CLOSE, STUCK OPEN	MECHANICAL FAILURE	VISUAL	NONE. VACUUM REL. DAMPER 0-~~XFD~~ DMP-30-1129 CAN CLOSE INDEPENDENTLY AND ELIMINATE FLOW PATH FROM OUTSIDE AIR	NONE. SEE REMARKS.	VACUUM RELIEF DAMPERS 0-~~XFD~~ DMP-30-1128 AND 0-~~XFD~~ DMP-30-1129 ARE INSTALLED IN SERIES.
51	AUX. BLDG. VACUUM RELIEF DAMPER 0-~~XFD~~-30-1129 DMP	PROVIDES FLOW PATH FOR OUTSIDE AIR	FAILS TO OPEN, STUCK CLOSED.	MECHANICAL FAILURE	VISUAL	AUX. BLDG. AT MORE NEGATIVE PRESS. (LOWER ABSOLUTE PRESS.) THAN REQ'D. TO PREVENT LEAKAGE TO OUTSIDE	NONE	THIS DAMPER WILL ONLY BE USED IN THE EVENT THAT ISOLATION DAMPERS 0-30-279 AND 0-30-280 FAIL CLOSE. THEREFORE FOR THIS DAMPER TO FAIL CLOSE, AND ONE OF THE ISOLATION DAMPERS TO FAIL CLOSE AT THE SAME TIME WOULD CONSTITUTE A DOUBLE FAILURE
			FAILS TO CLOSE, STUCK OPEN.	MECHANICAL FAILURE	VISUAL	NONE. VACUUM REL DAMPER 0-~~XFD~~ DMP-30-1128 CAN CLOSE INDEPENDENTLY AND ELIMINATE FLOW PATH FROM OUTSIDE AIR.	NONE. SEE REMARKS.	VACUUM RELIEF DAMPERS 0-~~XFD~~ DMP-30-1128 AND 0-~~XFD~~ DMP-30-1129 ARE INSTALLED IN SERIES.

ADD TO TABLE

Penetration Type XIX - Electrical

The electrical penetration assemblies provide a means for the continuity of power, control, and signal circuits through the primary containment structure.

Each assembly consists of redundant pressure barriers through which the electrical conductors are passed, as shown in Figure 6.2.4-17.

Each penetration assembly is sized such that it may be inserted into and be compatible with the penetration nozzles which are furnished as a part of the containment structure. Unless otherwise specified, the assembly is designed to be inserted from the outboard-end of the primary containment nozzle.

The criteria and requirements for the design, construction, and installation of the modular type electrical penetrations conform to IEEE Standard 317-~~1972,~~ 1976 "IEEE Standard for Electrical Penetration Assemblies in Containment Structures for Nuclear Fueled Power Generating Stations."

Penetration Type XX

The feedwater bypass line penetrations, shown in Figure 6.2.4-17A are the 'hot' type in which the penetrations must accommodate thermal movement. Each 'hot' process line where it passes through the containment penetration is enclosed in a guard pipe that is attached to the process line through a multiple fluid fitting. The guard pipe protects the bellows should the process line fail within the annulus between the containment vessel, thereby precluding the discharge of fluids into the annulus. The inner end of the guard pipe is fitted with an impingement ring which protects the bellows from jets originating from pipe breaks inside containment. In addition, the guard-pipe for this type of penetration extends through and is supported by the crane wall. This avoids transmitting loads to the containment vessel. Also, in the event of a pipe rupture it discharges fluid into the reactor compartment rather than smaller rooms outside the crane wall, thus preventing overpressurization of these smaller rooms.

For each of these penetrations, the penetration sleeve is welded to the containment vessel. The process line which passes through the penetration is allowed to move both axially and laterally. A two-ply bellows expansion joint is provided to accommodate any movement between the containment vessel and the Shield Building, under any conditions. The bellows is designed to withstand containment design pressure. When an embedded anchor is not utilized, a low-pressure flexible closure will seal the process line to the sleeve in the Shield Building, which will not impose significant stress on the penetration.

The flexible closure described above is located outdoors and serves to contain any leakage from the fluid head so that the leakage is routed back to the annulus, and to seal the annulus from the outdoors.

Guides and anchors limit movement of pipes such that design limits on the containment penetration and bellows are not exceeded during all conditions of plant operation, test, or postulated accidents.

Penetration Type XXI

The ERCW lines and several component cooling water lines employ penetration type XXI, as shown in Figure 6.2.4-17B. Process lines are welded directly to these penetrations.

Penetration Type XXII

The type XXII penetration is used for the multiple line nitrogen penetration. This penetration is shown in Figure 6.2.4-17C.

Penetration Type XXIII

This type of penetration is used for the chilled water lines and each penetration contains a single chilled water line. The penetration is illustrated in Figure 6.2.4-17D.

Penetration Type XXIV

Type XXIV penetrations are used for maintenance ports. These penetrations employ bellows as shown in Figure 6.2.4-17E. Any leakage through the flued heads or through the bellows will be into the annulus and thereby processed by the emergency gas treatment system.

The following codes, standards, and guides were applied in the design of the containment isolation system.

1. 10 CFR Part 50
2. ASME Boiler and Pressure Vessel Code Section III
3. Regulatory Guide 1.26
4. Regulatory Guide 1.29
5. ANSI N18.2-1973
6. IEEE Standard 317-~~1972~~ 1976

6.2.4.3 Design Evaluation

The containment isolation systems are designed to present a double barrier to any flow path from the inside to the outside of the containment using the double-barrier approach to meet the single-failure criterion.

When permitted by fluid system design, diverse modes of actuation are used for automatic isolation valves. In addition to diverse modes of operation, channel separation is also maintained. This also ensures that the single-failure criterion is met.

WATTS BAR NUCLEAR PLANT CONTAINMENT PENETRATIONS AND BARRIERS-TABLE 6.2.4-1 AMENDMENT 89

PENETRATION DATA							VALVE DATA																			
DETAIL	DWG NUMBER	GEN DES CRITERION	PROCESS FLUID	FLUID STATE	POSS LEAK PATHS	SYSTEM NUMBER AND PENETRATION DESCRIPTION	VALVE LOCATION	VALVE NUMBER	ESF POWER TRAIN	VALVE TYPE	ACTUATOR	PRI ACT MODE	SEC ACT MODE	ISOLATION SIGNAL	STROKE TIME	NORMAL	SHUTDOWN	VALVE STATUS: POST-ACCIDENT	VALVE STATUS: POWER FAILURE	ILRT	POS IND IN MCR	ESF	APP J TEST	ESSENTIAL/NON-ESS	SHIELD BLDG PENETRATION	NOTES
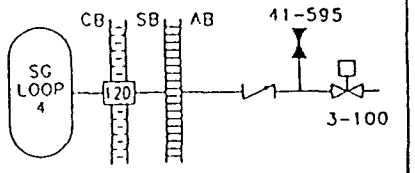 EL 731 AZ 352°20'	47W803-1 47W862-2	57 57	W W	H H	BC E	FEEDWATER (3,41)	AB AB	100 595	B -	GA GA	MO M	AT LM	LM -	FW -	- -	O C	C V	C V	AI AI	C C	Y N	N N	A A	N	MK70	22,24
EL 737 AZ 4°31' 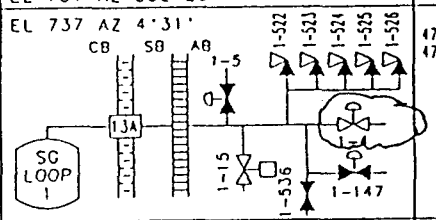	47W801-1 47W803-2	57 57	S S	H H	BC E	MAIN STEAM (1)	AB AB AB AB AB AB AB AB AB AB	4 5 15 147 522 523 524 525 526 536	A,B - A - - - - - - -	GL RV GA GA RV RV RV RV RV GL	AO AO MO AO - - - - - M	AT AT AT AT SA SA SA SA SA LM	LM RM RM RM - - - - - -	MS - - MS - - - - - -	- - - - - - - - - 	O C O C C C C C C C	C C C V C C C C C V	C C V C C C C C C C	C C C C - - - - - -	C C C C C C C C C C	Y N Y Y N N N N N N	N N N N N N N N N N	A A A A A A A A A A	N	MK63	22
EL 737 AZ 175°29' 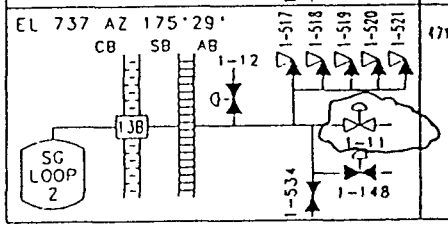	47W801-1	57	S	H	BC E	MAIN STEAM (1)	AB AB AB AB AB AB AB AB AB AB	11 12 148 517 518 519 520 521 534	A,B - - - - - - - - -	GL RV GA GA RV RV RV RV RV GL	AO AO AO - - - - - - M	AT AT AT SA SA SA SA SA SA LM	LM RM RM - - - - - - -	MS - MS - - - - - - -	- - - - - - - - - 	O C C C C C C C C C	C C V C C C C C C V	C C C C C C C C C C	C C C - - - - - - -	C C C C C C C C C C	Y N N N N N N N N N	N N N N N N N N N N	A A A A A A A A A A	N	MK64	22

WATTS BAR NUCLEAR PLANT CONTAINMENT PENETRATIONS AND BARRIERS-TABLE 6.2.4-1 AMENDMENT 89

PENETRATION DATA							VALVE DATA																			
DETAIL	DWG NUMBER	GEN DES CRITERION	PROCESS FLUID	FLUID STATE	POSS LEAK PATHS	SYSTEM NUMBER AND PENETRATION DESCRIPTION	VALVE LOCATION	VALVE NUMBER	ESF POWER TRAIN	VALVE TYPE	ACTUATOR	PRI ACT MODE	SEC ACT MODE	ISOLATION SIGNAL	STROKE TIME	VALVE STATUS: NORMAL	VALVE STATUS: SHUTDOWN	VALVE STATUS: POST-ACCIDENT	POWER FAILURE	ILRT	POS IND IN MCR	ESF	APP J TEST	ESSENTIAL/NON-ESS	SHIELD BLDG PENETRATION	NOTES
EL 737 AZ 184'8" 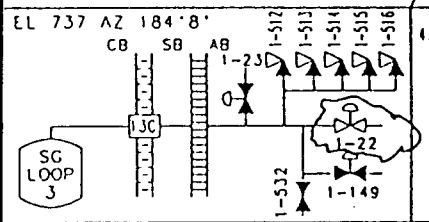	47W801-1 REVISED	57	S	H	BC E	MAIN STEAM (1)	AB	22	A,B	GL	AO	AT	LM	MS	-	O	C	C	C	C	Y	N	A	N	MK65	22
							AB	23	-	RV	AO	AT	RM	-	-	C	C	C	C	C	N	N	A			
							AB	149	-	GA	AO	AT	RM	MS	-	C	V	C	C	C	N	N	A			
							AB	512	-	GA	-	SA	-	-	-	C	C	C	-	C	N	N	A			
							AB	513	-	RV	-	SA	-	-	-	C	C	C	-	C	N	N	A			
							AB	514	-	RV	-	SA	-	-	-	C	C	C	-	C	N	N	A			
							AB	515	-	RV	-	SA	-	-	-	C	C	C	-	C	N	N	A			
							AB	516	-	RV	-	SA	-	-	-	C	C	C	-	C	N	N	A			
							AB	532	-	GL	M	LM	-	-	-	C	V	C	-	C	N	N	A			
EL 737 AZ 355'52" 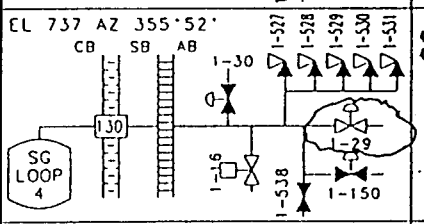	47W801-1 47W803-2 REVISED	57	S	H	BC E	MAIN STEAM (1)	AB	29	A,B	GL	AO	AT	LM	MS	-	O	C	C	C	C	Y	N	A	N	MK66	22
								16	A	GA	MO	AT	RM	-	-	O	C	V	C	C	Y	N	A			
								30	-	RV	AO	AT	RM	-	-	C	-	C	C	C	N	N	A			
								150	-	GL	AO	AT	RM	MS	-	C	V	C	-	C	N	N	A			
								527	-	RV	-	SA	-	-	-	C	C	C	-	C	N	N	A			
								528	-	RV	-	SA	-	-	-	C	C	C	-	C	N	N	A			
								529	-	RV	-	SA	-	-	-	C	C	C	-	C	N	N	A			
								530	-	RV	-	SA	-	-	-	C	C	C	-	C	N	N	A			
								531	-	RV	-	SA	-	-	-	C	C	C	-	C	N	N	A			
								538	-	GL	M	LM	-	-		C	V	C	-	C	N	N	A			
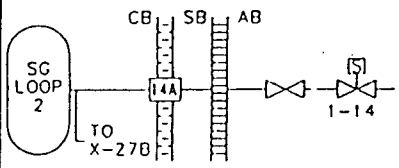 EL 739'6" AZ 9'30"	47W801-2	57	W	H	BE	STEAM GENERATOR BLOWDOWN (1)	AB	14	A	GL	SO	AT	RM	PA	15.0	O	C	C	C	C	Y	N	A	N	AS14A	22

WATTS BAR NUCLEAR PLANT CONTAINMENT PENETRATIONS AND BARRIERS–TABLE 6.2.4–1 AMENDMENT 85

PENETRATION DATA							VALVE DATA																			
DETAIL	DWG NUMBER	GEN DES CRITERION	PROCESS FLUID	FLUID STATE	POSS LEAK PATHS	SYSTEM NUMBER AND PENETRATION DESCRIPTION	VALVE LOCATION	VALVE NUMBER	ESF POWER TRAIN	VALVE TYPE	ACTUATOR	PRI ACT MODE	SEC ACT MODE	ISOLATION SIGNAL	STROKE TIME	NORMAL	SHUTDOWN	VALVE STATUS: POST-ACCIDENT	VALVE STATUS: POWER FAILURE	ILRT	POS IND IN MCR	ESF	APP J TEST	ESSENTIAL/NON-ESS	SHIELD BLDG PENETRATION	NOTE
X–18 EL 740 AZ 145	48N406	–	–	–	–	SPARE	–	–	–	–	–	–	–	–	–	–	–	–	–	–	–	–	A	–	–	
EL 689 AZ 318° REVISED 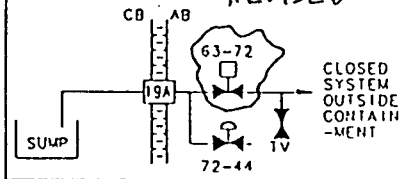 	47W811-1 47W812-1	–	W	H	D	SUMP SUCTION TO RHR PUMP 1A-A (63,72)	AB AB	72 44	A A	GA GA	MO MO	RM RM	LM LM	– –	– –	C C	C C	V V	AI AI	C C	Y Y	Y Y	A A	E	–	
EL 689 AZ 325° REVISED 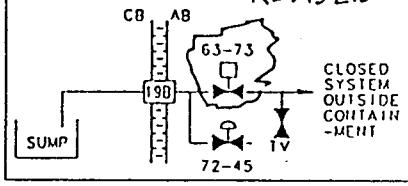 	47W811-1 47W812-1	–	W	H	D	SUMP SUCTION TO RHR PUMP 1B-B (63,72)	AB AB	73 45	B B	GA GA	MO MO	RM RM	LM LM	– –	– –	C C	C C	V V	AI AI	C C	Y Y	Y Y	A A	E	–	

WATTS BAR NUCLEAR PLANT CONTAINMENT PENETRATIONS AND BARRIERS–TABLE 6.2.4-1 AMENDMENT 85

PENETRATION DATA							VALVE DATA																			
DETAIL	DWG NUMBER	GEN DES CRITERION	PROCESS FLUID	FLUID STATE	POSS LEAK PATHS	SYSTEM NUMBER AND PENETRATION DESCRIPTION	VALVE LOCATION	VALVE NUMBER	ESF POWER TRAIN	VALVE TYPE	ACTUATOR	PRI ACT MODE	SEC ACT MODE	ISOLATION SIGNAL	STROKE TIME	NORMAL	SHUTDOWN	VALVE STATUS: POST-ACCIDENT	VALVE STATUS: POWER FAILURE	ILRT	POS IND IN MCR	ESF	APP J TEST	ESSENTIAL/NON-ESS	SHIELD BLDG PENETRATION	NOTE
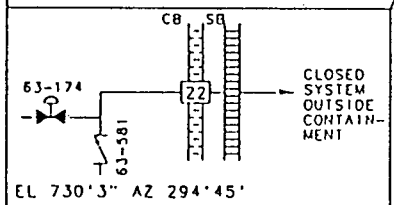 EL 730'3" AZ 294'45"	47W811-1	55	W	C	BD	SIS CHARGING PUMP DIS-CHARGE (63)	CB CB	174 581	– –	GL CK	AO –	LM SA	LM –	– –	– –	V –	V –	C –	C –	C –	N N	N Y	A A	E	AS22	
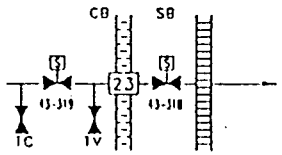 EL 729' AZ 283'	47W625-15	56	A	C	AB D	PAS CONT. AIR INTAKE TR.B (43)	CB SB	319 318	B B	GL GL	SO SO	RM RM	LM LM	– –	– –	C C	C C	V V	C C	C C	Y Y	N N	AC AC	E	MK61	19
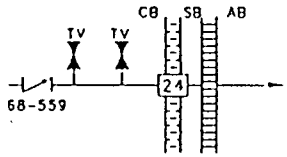 EL 727'6" AZ 301'	47W813-1 47W811-1 47W812-1	56	W	H	BD	RELIEF VALVE DISCHARGE (68)	CB	559	–	CK	–	SA	–	–	–	C	C	C	–	–	N	Y	A	E	AS24	25

Revised

WATTS BAR NUCLEAR PLANT CONTAINMENT PENETRATIONS AND BARRIERS-TABLE 6.2.4-1 AMENDMENT 85

PENETRATION DATA							VALVE DATA																		
DETAIL	DWG NUMBER	GEN DES CRITERION	PROCESS FLUID	FLUID STATE	POSS LEAK PATHS	SYSTEM NUMBER AND PENETRATION DESCRIPTION	VALVE LOCATION	VALVE NUMBER	ESF POWER TRAIN	VALVE TYPE	ACTUATOR	PRI ACT MODE	SEC ACT MODE	ISOLATION SIGNAL	STROKE TIME	NORMAL	SHUTDOWN	VALVE STATUS: POST-ACCIDENT	VALVE STATUS: POWER FAILURE	ILRT	POS IND IN MCR	ESF	APP J TEST	ESSENTIAL/NON-ESS	SHIELD BLDG PENETRATION	NOTES
X-89 EL 732 AZ 278°30'	48N406	–	–	–	–	SPARE	–	–	–	–	–	–	–	–	–	–	–	–	–	–	–	–	A	–	–	
UNIT 1 CB SB TC TV 32-313 90 32-102 – Revised 32-308 TV EL 729'6" AZ 280°30'	47W848-1	56	A	C	AB D	CONTROL AIR TR-B (32)	CB SB SB	313 102 308	– B –	CK GL GA	– AO M	SA AT LM	– RM –	– PB –	– 10.0 –	O O C	O O C	C C C	– C AI	– C C	N Y N	N N N	AC AC AC	N	MK105	10
UNIT 1 CB SB TC TV 32-303 91 32-80 32-298 TV EL 723'6" AZ 291°	47W848-1	56	A	C	AB D	CONTROL AIR TR-A (32)	CB SB SB	303 80 298	– A –	CK GL GA	– AO M	SA AT LM	– RM –	– PB –	– 10.0 –	O O C	O O C	C C C	– C AI	– C C	N Y N	N N N	AC AC AC	N	MK56	10

WATTS BAR NUCLEAR PLANT CONTAINMENT PENETRATIONS AND BARRIERS—TABLE 6.2.4-1 AMENDMENT 85

PENETRATION DATA							VALVE DATA																			
DETAIL	DWG NUMBER	GEN DES CRITERION	PROCESS FLUID	FLUID STATE	POSS LEAK PATHS	SYSTEM NUMBER AND PENETRATION DESCRIPTION	VALVE LOCATION	VALVE NUMBER	ESF POWER TRAIN	VALVE TYPE	ACTUATOR	PRI ACT MODE	SEC ACT MODE	ISOLATION SIGNAL	STROKE TIME	NORMAL	SHUTDOWN	VALVE STATUS: POST-ACCIDENT	VALVE STATUS: POWER FAILURE	ILRT	POS IND IN MCR	ESF	APP J TEST	ESSENTIAL/NON-ESS	SHIELD BLDG PENETRATION	N
X-63B EL 720 AZ 194.30°	48N106	-	-	-	-	SPARE	-	-	-	-	-	-	-	-	-	-	-	-	-	-	-	-	A	-	-	
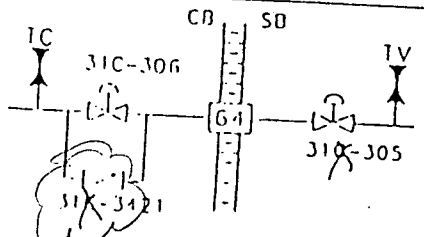 EL 737 AZ 65°	47N865-5	5G	W	C	AB D	INST RM CHILL H2O RETURN (31)	CB SB CB	306 305 3421	A B -	GL GL CK	AO AO -	AT AT SA	RM RM -	PA PA -	10.0 10.0 -	O O O	O O O	C C V	C C -	C C -	Y Y N	N N N	AC AC AC	N	MK92	8
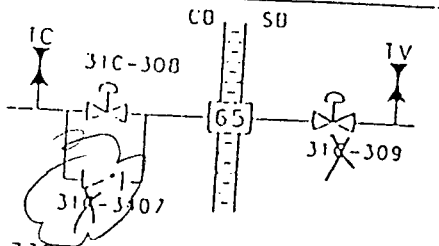 EL 738 AZ 65°	47N865-5	5G	W	C	AB D	INST RM CHILL H2O SUPPLY (31)	CB SB CB	308 309 3407	A B -	GL GL CK	AO AO -	AT AT SA	RM RM -	PA PA -	10.0 10.0 -	O O O	O O O	C C V	C C -	C C -	Y Y N	N N N	AC AC AC	N -	MK90	8

WATTS BAR NUCLEAR PLANT CONTAINMENT PENETRATIONS AND BARRIERS-TABLE 6.2.4-1 AMENDMENT 85

PENETRATION DATA							VALVE DATA																				
DETAIL	DWG NUMBER	GEN DES CRITERION	PROCESS FLUID	FLUID STATE	POSS LEAK PATHS	SYSTEM NUMBER AND PENETRATION DESCRIPTION	VALVE LOCATION	VALVE NUMBER	ESF POWER TRAIN	VALVE TYPE	ACTUATOR	PRI ACT MODE	SEC ACT MODE	ISOLATION SIGNAL	STROKE TIME	VALVE STATUS: NORMAL	VALVE STATUS: SHUTDOWN	VALVE STATUS: POST-ACCIDENT	VALVE STATUS: POWER FAILURE	ILRT	POS IND IN MCR	ESF	APP J TEST	ESSENTIAL/NON-ESS	SHIELD BLDG PENETRATION	
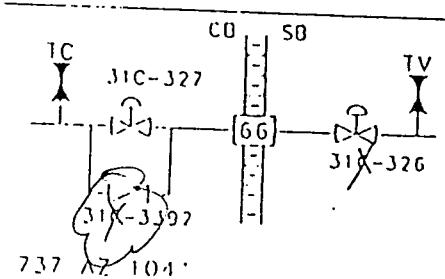 EL 737 AZ 104°	47X865-5	56	W	C	AB D	INST RM CHILL H2O RETURN (31)	CB SB CB	327 326 3392	B A –	GL GL CK	AO AO –	AT AT SA	RM RM –	PA PA –	10.0 10.0 –	O O O	O O O	C C V	C C –	C C O	Y Y N	N N N	AC AC AC	N	MK93	
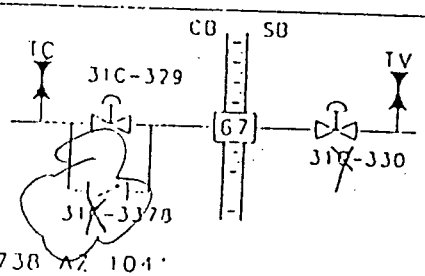 EL 738 AZ 104°	47X865-5	56	W	C	AB D	INST RM CHILL H2O SUPPLY (31)	CB SB CB	329 330 3378	B A –	GL GL CK	AO AO –	AT AT SA	RM RM –	PA PA –	10.0 10.0 –	O O O	O O O	C C V	C C –	C C O	Y Y N	N N N	AC AC AC	N	MK91	
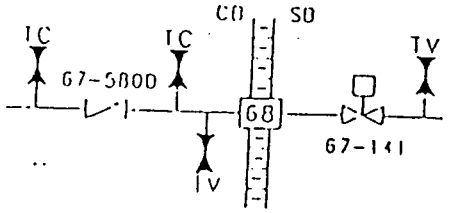 EL 794'6" AZ 301'15"	47X845-3	56	W	C	AB DE	UPPER CONT ERCW SUPPLY (67)	CB SB	5800 141	– B	CK BA	– MO	SA AT	– RM	– PB	– 66.0	– O	– O	– C	– AI	– C	N Y	N N	AC AC	N	MK88	

8. The combustible gas control system is designed for a lifetime consistent with that of the reactor plant.

9. All materials used in the fabrication of the hydrogen recombiners were selected to be compatible with the conditions inside the reactor containment during normal operation and during accident conditions.

10. The combustible gas control system is designed for periodic testing and inspection.

11. A redundant hydrogen sampling system is designed to detect and give indication in the main control room (MCR) of the presence and concentration of hydrogen in the primary containment atmosphere subsequent to a LOCA.

6.2.5.2 System Design

The sampling system for the hydrogen analyzer consists of a 3/8-inch sampling line taking samples from the upper and lower compartments and penetrating primary containment to connect to the hydrogen analyzer system. This line is equipped with two normally closed, solenoid operated, remote manually controlled, isolation valves. Upon actuation of the system the containment atmosphere is drawn through a series of sample conditioners including a trap, moisture separator, and filter prior to entering the analyzer. The sample is returned to primary containment via a 3/8-inch line. The return line is also equipped with two remote manually controlled isolation valves, normally closed. The analyzer is designed to operate under the conditions of pressure, temperature, humidity and radiation associated with a LOCA. The analyzer is calibrated to measure hydrogen concentrations between zero and ten percent with an indicated accuracy in the MCR of ± 1.4% hydrogen concentration by volume. Remote indication and control are provided in the MCR. The sampling system including lines is completely redundant and independent. A functional block diagram of the containment gas monitor subsystem is shown on Figure 6.2.5-6.

The design of the sampling system for the hydrogen analyzer is Seismic Category I, and conforms to ASME Section III, Class 2, and Section IX requirements, except the oxygen supply bottles, associated manifolds, and vacuum trap assemblies (see Table 3.2-2a); ANSI B16.5, B16.11, B31.1, and N45.2, ~~and B46.1~~ requirements; and the applicable requirements of the ASTM and IEEE. The hydrogen analyzer panels and all internal components are classified as Class 1E instruments qualified to IEEE 323-1971.

The combustible gas control system consists of two electric hydrogen recombiner units, located in the upper containment compartment. Each recombiner is provided with a separate power panel, control panel, and each is powered from a separate safeguard bus. The power panels are located in the Auxiliary Building. Each panel is in an area that is accessible following a loss-of-coolant accident. The control panel for each unit is located in the MCR.

Figure 6.2.5-1 is a sketch of the recombiner unit. The recombiner unit consists of a preheater section, a heater-recombination section, and an exhaust section.

All controls and displays necessary to bring the plant to a safe shutdown condition are included within the MCRHS area. Emergency food and water are provided as necessary during emergencies. Medical supplies are housed within the MCR. Toilet and kitchen facilities which may be required by main control room personnel are included also. Heating, ventilating, air conditioning, and air cleanup components to which access may be necessary are enclosed within the MCRHS area.

6.4.2.2 Ventilation System Design

The Control Building Heating, Ventilating, Air Conditioning, and Air Cleanup (HVACAC) System design is described in detail in Section 9.4.1. Flow diagrams, logic diagrams, control diagrams, and component data are also included in that description.

6.4.2.3 Leak Tightness

The flow rate necessary to maintain the MCRHS area at the required positive pressure is determined by the leakage characteristics of the MCRHS enclosure. The pressurization flow rate in emergency modes of operation is limited by the permissible dose set forth in 10 CFR 50, Appendix A, Criterion 19. Analyses indicate that if a pressurization flow rate in excess of ~~325~~ cfm is utilized, the dose to MCR personnel is greater than the permissible value. Thus, a low leakage MCRHS enclosure is required.

711

Although no infiltration is expected from interfacing areas, an infiltration flow rate is calculated to conservatively determine the dose in the MCRHS area. The infiltration flow rate is limited by the permissible dose set forth in 10 CFR 50, Appendix A, Criterion 19. Analysis indicates that the calculated infiltration rate is acceptable.

The enclosure is formed by the:

1. Monolithic reinforced concrete floor, walls and roof described in Section 3.8.4.

2. Metal pressure barrier beneath each control room console.

3 Low leakage seals for all electrical lines penetrating the enclosure.

4. Low leakage doors and door seals.

5. Low leakage ventilation system isolation dampers.

This enclosure is virtually insensitive to wind effects since only a small part of each end of the Control Building and the roof are exposed to the outside. Practically no control building penetrations exist on the building interfaces to the outside.

The walls, floors, and roof of the Control Building are of monolithic concrete construction. Few leakage paths exist in this type of construction.

Penetrations of the enclosure are provided with low leakage seals. Beneath each console in the main control room, a welded steel pressure barrier is provided. Electrical lines penetrating this barrier or any other portion of the MCRHS enclosure are provided with low leakage seals to restrict exfiltration and infiltration. Doors and weather stripping with low leakage characteristics are installed in doorways which penetrate the MCRHS enclosure. In addition, dampers in ducts which interface areas adjacent to the MCRHS enclosure are provided with operators and low leakage seals to provide a positive barrier to exfiltration and infiltration.

A survey of potential leakage paths was conducted to ensure that the amount of exfiltration from the MCRHS area is small enough that the required emergency pressurization flow rate does not exceed the limiting value of ~~325~~ 711 cfm. The potential leakage paths and the expected exfiltration via each path at a minimum MCRHS positive pressure of 1/8 inch w.g. (water gage) are summarized in Table 6.4-1 for each mode of MCRHS operation. Refer to Section 6.4.3 for a discussion of the operating modes of the MCRHS.

A survey of the infiltration leakage was taken to ensure that the MCRHS area dose would be within allowable limits. The potential and expected infiltration leakage for each path at 1/8 inch w.g. during the emergency mode is summarized in Table 6.4-2.

6.4.2.4 Interaction with Other Zones and Pressure-Containing Equipment

6.4.2.4.1 Other Ventilation Zones

Portions of the Auxiliary Building and Turbine Building are adjacent to the MCRHS area on the north and south sides respectively. In addition, the MCRHS area interfaces with other areas of the Control Building. There are few penetrations of the MCRHS enclosure except those entering the spreading room which is located directly below the MCRHS area. No adverse interaction that may enhance the transfer of toxic or radioactive gases into the MCRHS area is expected with any of these zones.

The north wall, i.e., q-line wall, of the MCRHS area separates it from the elevation 757 floor of the Auxiliary Building. Elevation 757 of the Auxiliary Building is maintained at a slightly positive pressure during normal operation of the plant. This positive pressure does not exceed the positive pressure level maintained in the MCRHS area. During emergency operation initiated from a control room isolation (CRI) signal, the shutdown board room pressurizing air supply fans are automatically de-energized by the CRI. Therefore, no significant pressure differential will ever exist between this part of the Auxiliary Building and the MCRHS area which could promote migration of airborne radioactive contamination or toxic gases into the MCRHS area.

The south wall, i.e., the n-line wall, of the MCRHS area is adjacent to the Turbine Building. The turbine building general ventilation system is not safety-related and is not designed to operate in an emergency. The Turbine Building will be maintained at atmospheric pressure during normal operation with a slight negative pressure being provided by the roof ventilators to induce outdoor air through louvers and dampers. Thus, no significant pressure differentials are expected which could overcome the outward-acting positive pressure maintained in the MCRHS areas.

The spreading room, at elevation 729, is directly below the central portion of the MCRHS area. This room is normally maintained at a slightly negative pressure with respect to atmospheric pressure. Upon MCRHS area isolation, both the air supply and exhaust to this room are stopped. Isolation dampers are used to isolate the room from the outside. Therefore, the spreading room is at approximately atmospheric pressure, or slightly negative, so any leakage between the MCRHS area and the spreading room is exfiltration from the MCRHS area.

The areas at the east and west ends of the Control Building which are immediately below the MCRHS area are open to the Turbine Building and, therefore, are at the same pressure as the rest of the Turbine Building. As discussed previously, no adverse pressure differentials are expected in the Turbine Building.

6.4.2.4.2 Pressure-Containing Equipment

In general, pressure-containing equipment or piping is not permitted in the MCRHS area. Several small hand-held fire extinguishers are located within the area for local fire control however. In addition, ~~twelve~~ ten self-contained breathing apparatuses are stored in the MCRHS area.

Zones interfacing with the MCRHS and which contain high-pressure equipment are portions of the Turbine Building and the areas at the east and west ends of the Control Building directly below the MCRHS area. These areas contain steam piping and feedwater lines. No adverse pressure differentials are expected from failure of these lines since any significant differential would result in rupture of the glass sections of the Turbine Building walls. Areas of the Auxiliary Building which contain high-pressure equipment have no direct interface with the MCRHS area.

6.4.2.5 Shielding Design

Refer to Section 12.3.2.

6.4.2.6 Control Room Emergency Provisions

The MCRHS Area is designed for long-term occupation by personnel required during emergency operation. Supplies and emergency equipment are stored within the habitability area. Among the emergency supplies provided are:

a. First aid kit and other medical supplies.

b. Protective clothing

c. Compressed breathing air units

d. Demand-type self-contained breathing apparatus with 500 in^3 cylinders.

e. Tool kit.

f. Flashlights and extra bulbs and batteries.

g. Several rolls of masking and electrical tape.

emergency air cleanup trains. One of the two emergency pressurizing fans (and its associated emergency air intake) is subsequently placed in the standby mode by the operator.

3. The exhaust fan in the toilet rooms is stopped and double isolation dampers are closed to prevent the inflow of unfiltered outside air to the MCRHS area.

4. The shutdown board rooms pressurizing air supply fans in the Auxiliary Building El. 757.0 are automatically de-energized.

In addition, the following conditions which normally can indirectly affect the MCRHS are automatically implemented:

1. The spreading room supply and exhaust fans are stopped and the operating battery room exhaust fan continues to run.

2 Double isolation dampers in the spreading room supply duct and a single isolation damper in the exhaust duct will close to prevent infiltration of outside air to the spreading room.

3. The normal operating electric board room air handling units continue to supply the same outside air quantity to the Control Building lower floors.

4. Automatic isolation valves close to stop the flow of unfiltered pressurizing air to the MCRHS.

In the emergency mode, determination of the appropriate emergency pressurizing fan to place in standby is based on the operator's judgement.

The operator has the capability to compare radiation levels at the two emergency air intakes, as described under the extreme emergency operating mode below.

In the emergency operations mode, ingress and egress in the MCRHS area is administratively restricted to essential movement and takes place through one of the designated entryways on the Elevation 755 level. During this mode, ~~325~~ 711 cfm of outside air is drawn in and mixed with ~~3675~~ 3289 cfm of recirculated air, drawn through an air cleanup unit, and processed in the MCR air handling unit for proper humidity and temperature levels. In this mode, air leakage resistance from the MCRHS area will assure the maintenance of a minimum 1/8 inch w.g. positive pressure in the main control room habitability zone with the doors closed. Such a capability is demonstrated during preoperational test and periodically thereafter.

Extreme Emergency Mode

The control building outside air intakes are provided with radiation monitors that indicate and annunciate in the main control room. This instrumentation allows the operator to compare radiation levels at the two emergency air intakes and select the less contaminated intake for operation during emergency conditions. If the intake monitors indicate that extremely high air contamination levels exist outside (e.g., post-LOCA conditions approaching

Regulatory Guide 1.4 releases which prohibit outdoor movement), the air intake having the lower contamination level is chosen and the extreme emergency operations mode is utilized. It is not required, however, from a dose standpoint, that the less contaminated air intake be chosen initially (see Section 15.5).

During the extreme emergency operations mode, necessary ingress and egress is restricted to just one entryway on Elevation 755. All other doors from the MCRHS area are sealed with heavy tape to reduce the outleakage from the MCRHS area. Such a practice reduces air leakage through the doorjamb seals. This procedure provides a greater leakage margin during critical periods of the emergency and maintains the entire MCRHS area above the minimum 1/8 inch w.g. positive pressure.

The restricted ingress or egress under control room operator surveillance for all emergency modes minimizes the unfiltered airflow into the MCRHZ to approximately 10 cfm.

The basis for this position is that during this brief period when the door is open the air flow will be from inside the MCRHS area to the outside. Since the pressure will never be less than atmospheric in the MCRHS area during this interval, little contamination is expected to leak into the MCRHS area. In such circumstances the makeup air input of ~~325~~ 711 cfm to the MCRHS area is considered sufficient to prevent unfiltered air infiltration into the MCRHS area.

6.4.4 Design Evaluations

6.4.4.1 Radiological Protection

Refer to Section 12.3.

6.4.4.2 Toxic Gas Protection

The evaluation of main control room habitability included consideration of possible hazards created by accidental release of potentially toxic chemicals. The evaluation considered chemicals stored both onsite and offsite within a 5-mile radius. Possible shipments of toxic chemicals by barge, rail, or road routes within a 5-mile radius were also considered.

Watts Bar Steam Plant, located approximately 0.7 miles from Watts Bar Nuclear Plant, is an offsite storage location for potentially hazardous chemicals within the 5-mile radius considered. Chemicals stored at the steam plant include acetone, anhydrous ammonia, carbon dioxide, methanol, nitrogen, sulfuric acid, isopropyl alcohol, calcium oxide, bentonite, soda ash, salt (NaCl), sodium sulfite, dichlorodifluoromethane, freon, acetylene, and sodium hypochlorite. However, only very small quantities of the chemicals, excluding carbon dioxide (1 ton) and nitrogen (5 tons), are stored at the steam plant. Since nitrogen and carbon dioxide are asphyxiants and large concentrations of these chemicals are required to create a hazard, and since only small quantities, as defined in Table C-2 of NRC Regulatory Guide 1.78, of the other more toxic chemicals are stored, no hazard to main control room personnel at Watts Bar Nuclear Plant is foreseen.

TABLE 6.4-1

AIR LEAKAGE (EXFILTRATION) PATHS IN THE WATTS BAR MCRHS AREA CONTROL ROOM

Leakage Path	Flow Rate[4] (cfm)		
	Normal Operation Mode	Emergency Mode	Extreme Emergency Mode
Doors	215.1	215.1	107.5
Toilet Damper	825[1]	9.7	9.7
Spreading Room Dampers	1200[1]	16.5	16.5
Other Dampers	3.1	3.1	3.1
Penetrations (electrical, piping, and ducts)	0.1	0.1	0.1
Concrete Walls, Floor, and Roof	0.2	0.2	0.2
Duct Leakage (to outside of MCRHS)	~~18.9~~ 24.4	~~9.9~~ 24.4	~~18.9~~ 24.4
Total[2]	~~2262.4~~ 2267.9	~~254.6~~ 269.1	~~156~~ 161.5
Air Intake[3]	3200	~~325~~ 711	~~325~~ 711
Net Excess Capacity	~~937.6~~ 932.1	~~70.4~~ 441.9	~~169~~ 549.5

NOTES:

1 During normal operation, this flow path is normally open.

2 If the toilet exhaust fan or the spreading room supply fan fails to shut down during emergency mode concurrent with isolation damper failing open, a maximum of 24 cfm additional out-leakage may occur.

3 During both emergency modes, the ventilation supply is isolated with butterfly valves.

4 All numbers rounded to the nearest tenth.

TABLE 6.4-2

AIR LEAKAGE (INFILTRATION) PATHS IN THE WATTS BAR MCRHS AREA CONTROL ROOM

Leakage Path	Flow Rate (cfm)
Door into Turbine Building (for egress/ingress)	10.0[1]
Emergency Pressurizing System Discharge Duct	~~2.12~~ 0[3]
Control Air for Fire Protection	2.0
Pneumatically Operated Dampers and Valves	24.0[2]
Pneumatically Operated Instruments	1.0
Normal Pressurizing Duct	~~12.6~~ 0[3]
o Battery Room Exhaust	~~7.8~~ 1.8
Safety Margin	~~15.48~~ 36.2
Total	75.0
Initial Use of Pneumatic Valves and Dampers	24.0
Steady-State Total	51.0

NOTES:

1 To account for the possible increase in air exchange due to ingress or egress, an additional 10 cfm was added.

2 Initially, the pneumatic dampers and valves release air into the MCRHS area; after dampers and valves are set, they are no longer used.

3. These Ducts are under negative pressure, ~~which~~ therefore, leakage will be out of the MCRHS.

2. These air cleanup units are a part of the reactor building purge system. See Section 9.4.6.1 for the design basis for other portions of this system.

6.5.1.1.4 Main Control Room Emergency Air Cleanup Units

The design bases are:

1. To provide air purification capabilities sufficient to keep air purity levels in the main control room and adjoining areas defined in Section 6.4 within limits needed to satisfy Criterion 19 of 10 CFR 50, Appendix A.

2. These air cleanup units are a part of the control room area ventilation system. See Section 9.4.1.1 for the design bases for other portions of this system.

6.5.1.2 System Design

6.5.1.2.1 Emergency Gas Treatment System Air Cleanup Units

The air cleanup units are a part of the air cleaning subsystems of the EGTS. See Section 6.2.3.2.2 for a description of the system design of the air cleanup subsystem, and the function, operation and control of the air cleanup units within that system.

The rated capacity of each redundant air cleanup unit in the subsystem is 4000 cfm. Both units are located in the EGTS room on Elevation 757. They are adjacent to each other, but separated by a concrete barrier wall.

The air cleanup units are steel housings containing air treatment equipment, samples, heaters, a drain, test fittings, and access facilities for maintenance. The air treatment equipment within the housing includes a demister, relative humidity heater, prefilter bank, HEPA filter bank, two banks of carbon adsorbers in series and another HEPA filter bank. This equipment is installed in the order listed.

The housing incorporates a quench-type water supply and drain system for flooding the carbon in case of fire. A drain is also incorporated into the housing adjacent to the demister installation to allow moisture separated from the air stream to flow by gravity to a water collection tank in the Auxiliary Building. Integral to this housing are test fittings properly sized and positioned to permit orderly and efficient testing of the HEPA filter and carbon adsorber banks.

The relative humidity heater installed in the air cleanup units is an electric heater designed to heat the incoming air sufficiently to reduce the relative humidity of saturated air to 70%. ~~The relative humidity of incoming air from the annulus has been determined not to exceed 70% during accident conditions.~~ Included in this installation is a temperature limiting controller that will shut the heater off if excessive temperatures are detected.

Containment isolation can be initiated by either of two signals:

Phase A signal is generated by either of the following:

1. Manual - either of two momentary controls.

2. Safety injection signal generated by one or more of the following:

   a. Low steamline pressure in any steamline.
   b. Low pressurizer pressure.
   c. High containment pressure.
   d. Manual - either of two momentary controls.

Phase B signal is generated by either of the following:

1. Manual - two sets (two switches per set) - actuation of both switches in either set is necessary for spray initiation.

2. High-high containment pressure signals.

Containment isolation Phase A exists if containment isolation Phase B exists; i.e., when the Phase B signal is initiated by automatic instrumentation. Phase A containment isolation does not occur when the Phase B signal is initiated manually. The instrumentation circuits that generate both Phase A and Phase B signals are described in Section 7.1.2.1.2.

Containment purge system isolation (containment purge lines only) can be initiated by either of two signals:

1. Manual - Phase A or B manual initiate
   - SIS manual initiate

2. Automatic - SIS auto-initiate
   - High radiation (Train A or B sensor)
   - ~~High~~ Purge exhaust ~~radiation (1 of 2 sensors).~~

An analysis was performed to determine the offsite radiological consequences of a LOCA during a containment purge operation and before completion of containment isolation. A DBA-LOCA and a 98 gpm break in the primary coolant line (smallest break in which RCS pressure cannot be maintained) were considered in order to provide complete information to evaluate the offsite radiological consequences. In this analysis containment isolation was assumed to be initiated from two out of three high containment pressure signals with isolation setpoints at 1.5 psig. The purge system isolation was considered complete 4 seconds after the isolation signal was received by all the isolation valves.

The amount of containment atmosphere released to the environment during a design basis accident (DBA) was conservatively estimated as the flow computed from the maximum peak calculated containment pressure of 8.7 psig (see LOTIC results in Section 6.2.1.3) for the full required isolation time of 4 seconds.

TABLE 6.5-3

(Sheet 1 of 3)

REGULATORY GUIDE 1.52, REV.2, SECTION APPLICABILITY FOR THE REACTOR BUILDING PURGE VENTILATION SYSTEM

Reg. Guide Section	Applicability To This System	Comment Index	Reg. Guide Section	Applicability To This System	Comment Index
C.1.a	yes	Note 1	C.3.e	yes	Note 14
C.1.b	yes	--	C.3.f	yes	----
C.1.c	yes	--	C.3.g	yes	Note 14
C.1.d	yes	--	C.3.h	yes	----
C.1.e	yes	--	C.3.i	yes	Note 14
			C.3.j	yes	Note 14
C.2.a	no	Notes 3 & 13	C.3.k	yes	Note 11
C.2.b	no	Note 4	C.3.l	no	Note 14
C.2.c	yes	--	C.3.m	yes	----
C.2.d	no	Note 5	C.3.n	no	Notes 9, ~~14,~~ & 16
C.2.e	yes	--	C.3.o	yes	----
C.2.f	yes	--	C.3.p	no	Notes 12 & 14
C.2.g	no	Note 6			
C.2.h	no	Note 1	C.4.a	no	Note 12
C.2.i	yes	--	C.4.b	no	Note 17
C.2.j	no	Note 8	C.4.c	no	Note 14
C.2.k	yes	--	C.4.d	yes	----
C.2.l	no	Note 9	C.4.e	yes	----
C.3.a	no	Notes 3 & 10	C.5.a	yes	Note 15
C.3.b	no	Notes 3 & 10	C.5.b	yes	Note 15
C.3.c	yes	Note 14	C.5.c	yes	Note 15
C.3.d	yes	Note 14	C.5.d	yes	Note 15
			C.6.a	yes	Notes 14 & 15
			C.6.b	yes	Note 14

NOTES

1. The postulated design basis accident (DBA) for the reactor building purge ventilation system is a fuel handling accident within the Reactor Building.

2. Deleted

3. Each air cleanup unit contains a prefilter bank, HEPA filter bank, and carbon adsorber bank in the order listed.

4. The short duration of the air cleanup operation needed following the postulated DBA identified in Note 1 makes this requirement unnecessary because the probability of such destructive events to equipment already in operation during a short period of time is extremely small.

TABLE 6.5-4

(Sheet 1 of 3)

REGULATORY GUIDE 1.52, REV.2, SECTION APPLICABILITY FOR THE MAIN CONTROL ROOM AIR CLEANUP SUBSYSTEM

Reg. Guide Section	Applicability To This System	Comment Index
C.1.a	yes	Note 1
C.1.b	yes	--
C.1.c	yes	--
C.1.d	yes	--
C.1.e	yes	--
C.2.a	no	Notes 3 & 9
C.2.b	~~no~~ yes	Note 2
C.2.c	yes	--
C.2.d	no	Note 4
C.2.e	yes	--
C.2.f	yes	--
C.2.g	~~no~~ yes	Note 5
C.2.h	yes	--
C.2.i	yes	--
C.2.j	no	Note 6
C.2.k	yes	--
C.2.l	no	Note 7
C.3.a	no	Notes 3 & 8
C.3.b	no	Notes 3 & 8
C.3.c	no	Notes 3 & 8
C.3.d	yes	Note 12
C.3.e	yes	Note 12
C.3.f	yes	--
C.3.g	yes	Note 12
C.3.h	yes	--
C.3.i	yes	Note 12
C.3.j	yes	Note 12
C.3.k	no	Note 10
C.3.l	no	Note 12
C.3.m	yes	----
C.3.n	no	Notes 7, 12, & 14
C.3.o	yes	----
C.3.p	no	Note 12
C.4.a	no	Note 11
C.4.b	no	Note 11
C.4.c	no	Note 12
C.4.d	yes	----
C.4.e	yes	----
C.5.a	yes	Note 13
C.5.b	yes	Note 13
C.5.c	yes	Note 13
C.5.d	yes	Note 13
C.6.a	yes	Notes 12 & 13
C.6.b	yes	Note 12

NOTES

1. The postulated design basis accident (DBA) for the main control room air cleanup units is the DBA LOCA.

2. All equipment is protected from natural phenomena and no high pressure equipment exists in the area. Rotating equipment is suitably encased and therefore, no missiles are expected to be generated which could result in loss of redundancy.

TABLE 6.5-4

(Sheet 2 of 3)

REGULATORY GUIDE 1.52, REV.2, SECTION APPLICABILITY FOR THE MAIN CONTROL ROOM AIR CLEANUP SUBSYSTEM (cont'd)

3. Each redundant air cleanup subsystem contains a HEPA filter bank and a carbon adsorber bank.

4. No pressure surges of any significance to this system are envisioned during the postulated DBA identified in Note 1.

5. Differential pressure sensors are used to sense failure of an air cleanup unit, switch to the backup unit, and annunciate in the main control room. Differential pressure sensors for the HEPA and adsorber banks are located on the air cleanup unit housings in the mechanical equipment room located next to the main control room. This mechanical equipment room is readily accessible to main control room personnel.

6. The amount of radioactive material collected by the filter and adsorber banks in the DBA LOCA is not sufficient to create a serious radiation hazard. Furthermore, adequate capacity for air cleanup is provided to protect the main control room personnel for the full 30 day duration of the postulated emergency. Therefore, there is no need for a filter or adsorber bank replacement during the emergency.

7. No enhancement in safety is foreseen by utilizing low leakage ducting in this system. Leakage from commercial grade ducting within the main control room cannot jeopardize safety because all supply and exhaust air is clean. No safety hazard due to small duct leakage outside the enclosed space containing the main control room is envisioned. During emergencies, essentially all air in-leakage into ducting with air below atmospheric pressure is cleaned up in its passage through the air cleanup unit. All external ducting having air at a positive pressure ~~does not~~ and potentially entraining contaminants ~~that are subsequently~~ which can be introduced into the main control room ~~because the~~ due to leakage ~~from ducting having a positive air pressure is from the duct to the outside. However,~~ and the air cleanup units are ~~ductwork is~~ leak-tested in accordance with ANSI N509-1976.

8. No equipment of this kind is utilized in the system.

9. The small quantities of outside air brought inside do not contain sufficient moisture to cause the mixture of recirculated air and outside air to have a humidity level sufficiently high to degrade the adsorber bank performance.

10. The amount of radioactive material collected during the entire 30 day emergency due to the postulated DBA is too small to raise the adsorber bank temperature near the carbon ignition temperature.

11. Compliance with this section is not a licensing requirement.

TABLE 6.5-8

(Sheet 1 of 2)

SECONDARY CONTAINMENT OPERATION FOLLOWING A DBA

PART I - Shield Building Secondary Containment Enclosure

General

Type of Structure: Reinforced Concrete

Free Volume: ~~375,000~~ 396,000 cubic feet

Annulus Width: 5 feet

Location of Fission Product Removal Systems:
See Sections 6.5.1 and 6.5.4

Time-Dependent Parameters

Inleakage Rate: 250 cfm

Pressure: -0.5 inch water gauge at (~~annulus elevation~~ nominal required value at the ~~equivalent to~~ top of the Auxiliary Building elevation)

Air Cleanup System Flow Rate: 4000 cfm

Recirculation Flow Rate: 3750 cfm

Exhaust Flow Rate: 250 cfm

Effectiveness of Fission Product Removal System:
See Section 6.5.3

PART II - Auxiliary Building Secondary Containment Enclosure

General

Type of Structure: Reinforced Concrete

Free Volume: 6.9×10^6 cubic feet

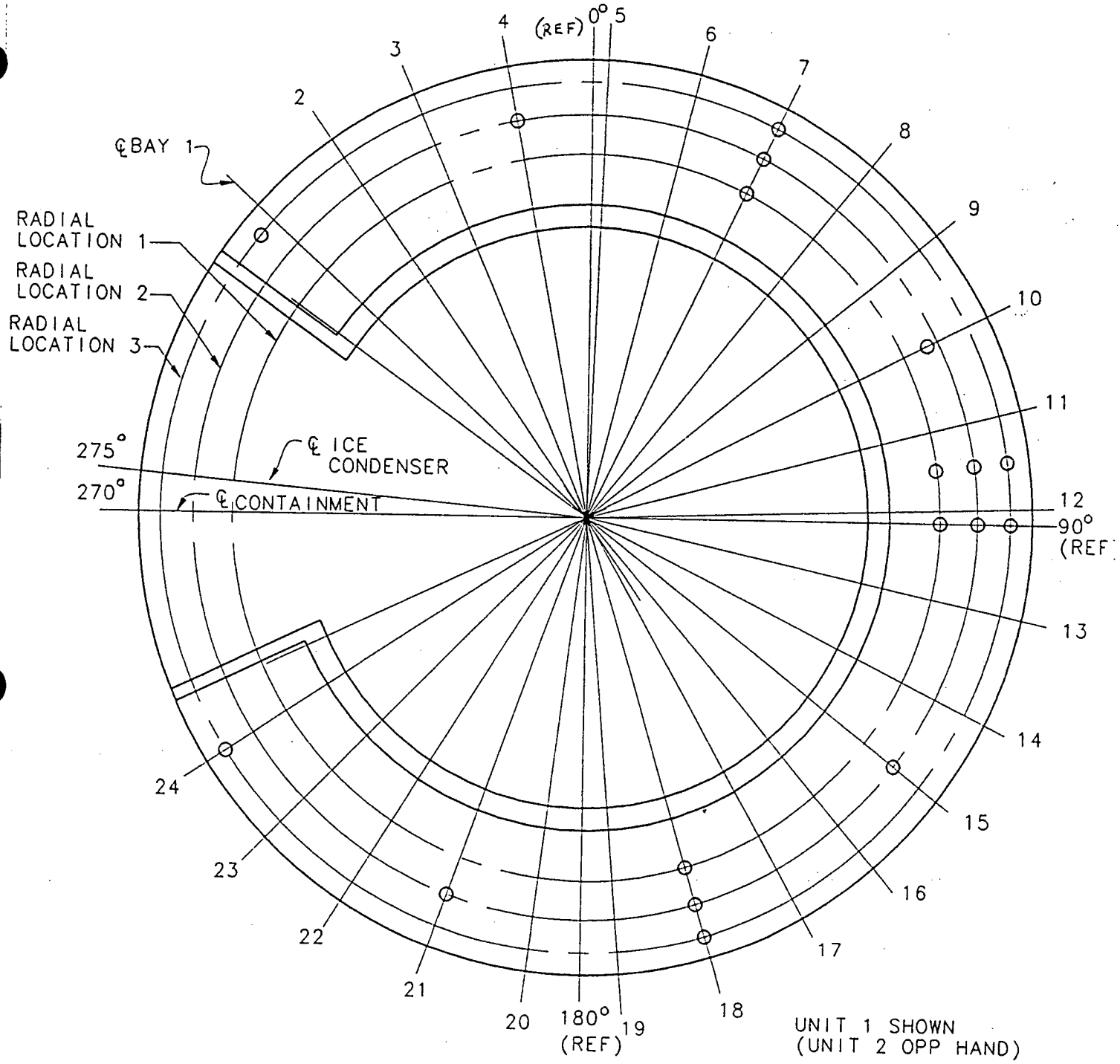

TITLE
WATTS BAR NUCLEAR PLANT
FINAL SAFETY
ANALYSIS REPORT

ICE CONDENSER RTD LOCATION

DATE 4-7-95

FIGURE 6.7-38

1. "General Design Criteria for Nuclear Power Plants, "Appendix A to Title 10 CFR Part 50, July 7, 1971." (See Sections 7.2, 7.3, 7.4, and 7.6).

2. "Regulatory Guide 1.11 - Instrument Lines Penetrating Primary Reactor Containment," Regulatory Guides for Water-Cooled Nuclear Power Plants, Division of Reactor Standards, Atomic Energy Commission.

3. "Regulatory Guide 1.22 - Periodic Testing of Protection System Actuation Functions," Regulatory Guides for Water-Cooled Nuclear Power Plants, Division of Reactor Standards, Atomic Energy Commission. (See Table 7.1-1, Note 2).

4. Regulatory Guide 1.29 (Revision 1) - "Seismic Design Classification," Regulatory Guides for Water-Cooled Nuclear Power Plants," Directorate of Regulatory Standards, Atomic Energy Commission.

5. The Institute of Electrical and Electronic Engineers, Inc., "IEEE Standard: Criteria for Protection Systems for Nuclear Power Generating Stations," IEEE Standard 279-1971. (See Sections 7.2., 7.3, 7.6).

6. The Institute of Electrical and Electronic Engineers, Inc., "IEEE Standard Criteria for Class 1E Electric Systems for Nuclear Power Generating Stations," IEEE Standard 308-1971.

7. The Institute of Electrical and Electronic Engineers, Inc.," IEEE Standard for Electrical Penetration Assemblies in Containment Structures for Nuclear Fueled Power Generating Stations," IEEE Standard 317-~~1971.~~ 1976 (See Section 8.3.1.2.3).

8. The Institute of Electrical and Electronic Engineers, Inc., "IEEE Trial-Use Standard: General Guide for Qualifying Class I Electric Equipment for Nuclear Power Generating Stations," IEEE Standard 323-1971. (See Table 7.1-1, Note 4).

9. The Institute of Electrical and Electronic Engineers, Inc., "IEEE Standard for Qualifying Class 1E Equipment for Nuclear Power Generating Stations", IEEE Std. 323-1974.

~~10. The Institute of Electrical and Electronic Engineers, Inc.," IEEE Trial-Use Guide for Type Tests of Continuous-Duty Class I Motors Installed Inside the Containment of Nuclear Power Generating Stations." IEEE Standard 334-1971. (See Section 8.3).~~

11. The Institute of Electrical and Electronic Engineers, Inc., "IEEE Standard Installation, Inspection, and Testing Requirements for Instrumentation and Electric Equipment During the Construction of Nuclear Power Generating Stations," IEEE Standard 336-1971. (See Section 8.3.1.2.2).

12. The Institute of Electrical and Electronic Engineers, Inc., "IEEE Trial-Use Criteria for the Periodic Testing of Nuclear Power Generating Station Protection Systems," IEEE Standard 338-1971. (See Section 7.3.2.2.5 and Table 7.1-1, Note 1).

pertaining to electrical cable for safety-related systems is given in Section 8.3.1.4. Critical circuits and functions include: power, control, and process protection channels associated with the operations of the reactor trip system or engineered safety features actuation system. Failure events are evaluated for credibility and credible events shall include, but not be limited to, the effects of short circuits, pipe rupture, missiles, etc., and are considered in the basic plant design. Control board details are given in Section 7.7.1.10. In the control board, separation of redundant circuits is maintained as described in
Section 7.1.2.2.2.

Instrument sensing lines (including capillary systems) which serve safety-related systems identified in Section 7.1.1.1 are designed to meet the independence requirements of criterion 22 of the 1971 General Design Criteria and IEEE 279-1971 Section 4.6. The requirements consider the following events: (1) normal activities in the area (e.g., maintenance); (2) high and moderate energy jet streams, missiles, and pipe whip; and (3) possible damage caused by falling loads from the plant lifting systems (e.g., cranes, monorails). Exceptions to these requirements shall be evaluated for technical adequacy and documented in Design Basis Documents.

7.1.2.2.1 General

1. Cables of redundant circuits shall be run in separate cable trays, conduits, ducts, penetrations, etc.

2. Circuits for nonredundant functions should be run in cable trays or conduit separated from those used for redundant circuits. Where this can not be accomplished, nonredundant circuits may be run in a cable tray, conduit, etc., assigned to a redundant function. When so routed, it must remain with that particular redundant circuit routing and shall not cross over to other redundant groups.

3. Horizontal and vertical separation shall be maintained between cable trays associated with redundant circuits.

4. Where it is impractical for reasons of equipment arrangement to provide separate cable trays, cables of redundant circuits shall be isolated by approved ~~physical~~ barriers ~~or be installed in separate metallic conduit~~ or proven safe by test or analysis.

5. Power and control cables rated at 600V or below shall not be placed in cable trays with cables rated above 600V.

6. Low-level type signal cables shall not be routed in cable trays containing power cables. Higher level protection instrumentation analog and signal cables (above 100 mV) may be routed in the same tray with control cables if a tray barrier is provided between cables.

7.1.2.2.2 Specific Systems

Channel independence is carried throughout the system, extending from the sensor through to the devices actuating the protective function. Physical separation is used to achieve separation of redundant transmitters. Separation of wiring is achieved using separate wireways, cable trays, conduit runs and containment penetrations for each redundant channel. Each redundant channel is energized from a separate ac power feed.

Within the process protection system there are four separate protection channel sets. Redundant protection channels are separated by locating the processing electronics of the redundant channels in different protection channel rack sets. Separation of redundant channels begins at the sensors and is maintained in the field wiring, containment penetrations, and process protection channel racks. Thus any single failure within a channel will not prevent initiation of a required protection system action.

In the nuclear instrumentation system and the solid state protection system racks where redundant channels of protection instrumentation are physically adjacent, there are no wireways or cable penetrations which would permit, for example, a fire resulting from electrical failure in one channel to propagate into redundant channels in the logic racks.

Independence of the logic trains is discussed in Sections 7.2 and 7.3. Two reactor trip breakers are actuated by two separate logic matrices which interrupt power to the control rod drive mechanisms. The breaker main contacts are connected in series with the power supply so that opening either breaker interrupts power to all control rod drive mechanisms, permitting the rods to free fall into the core.

1. Reactor Trip System

   a. Separate routing is maintained between the four reactor trip system process protection channels, including the sensor signals, comparator signals, and associated power supplies.

   b. Separate routing of the reactor trip signals from the two redundant logic system cabinets is maintained. In addition, they are separated (by spatial separation, by ~~provision of~~ approved barrier, or by separate cable trays or wireways) from the four protection instrumentation channels.

2. Engineered Safety Features Actuation System

   a. Separate routing is maintained for the four redundant sets of ESF actuation system process protection channels, comparator output signals and power supplies for such systems. The separation of these four redundant and independent protection channel sets is maintained from sensors through process protection racks to logic system cabinets.

   b. Separate routing of the ESF actuation signals from the two redundant logic system cabinets is maintained. The ESF actuation signals are also separated from the four process protection channels.

   c. Separate routing of redundant control and power circuits associated with the operation of engineered safety features equipment is required to retain redundancies provided in the system design and power supplies.

3. Vital Control Power Supply System

   The separation criteria presented above also apply to the power supplies for the load centers and buses distributing power to redundant components and to the control of these power supplies.

4. Control Board

Control board switches and associated lights are generally furnished in modules. Modules provide a degree of physical protection for the switches, associated lights and wiring. Teflon wire is used within the module and between the module and the first termination point.

Modular train column wiring is formed into wire bundles and carried to metal wireways (gutters). Gutters are run into metal vertical wireways (risers). The risers are the interface between field wiring and control board wiring. Risers are arranged to maintain the separated routing of the field cable trays.

~~Certain~~ Wiring within control boards has been designed and installed to maintain physical independence. Design features include enclosed modular switches, metal wireways, use of ~~cable rated at 600 volt 200°C temperature rating and with noncombustible insulation of teflon type E or K per MIL W 16878 and~~ metallic woven braid ~~applied to the outer jacket~~ over approved insulation of critical wires. PVC type tubing (Tygon) has been used in some installations to insulate up to approximately 6 inches of the drain wire where signal cable is broken out to terminate the cable at termination points.

Figure 7.1-2 shows the details of the control boards critical wiring braid installation. Wiring for each train is routed from the field to separate vertical risers, separated horizontally in enclosed horizontal wireways, and then routed from the wireway to the enclosed switch module in metallic braid. Maximum air space between cables of different trains has been maintained and in no case do cables from different trains touch nor can they migrate with time to touch.

In order to maintain separation between wiring associated with different logic trains, mutually redundant safety train wiring is not terminated on a single device. Backup manual actuation switches link the separate trains by mechanical means to provide greater reliability of operator action for the manual reactor trip function and manual engineered safety features actuations. The linked switches are themselves redundant so that operation of either set of linked switches will actuate safety trains "A" and "B" simultaneously.

Safety-related indicators, e.g., post accident monitoring indicators are separated by metallic barrier plates and/or air separation. Teflon insulated wire is used between the indicators and the first termination point. The wire routing method is similar to that used for the modules.

Reactor trip system and engineered safety features actuation system process protection channels may be routed in the same wireways provided circuits have the same power supply and channel set identity (I, II, III or IV).

7.1.2.2.3 Fire Protection

Details of fire protection are provided in Section 9.5.1.

a. Testing at plant shutdown
   1) Source range testing
   2) Intermediate range testing
   3) Power range testing

b. Testing between P-6 and P-10 permissive power levels
   1) Intermediate range testing
   2) Power range testing

C. Testing above P-10 permissive power level
   1) Power range testing

For a detailed description of the nuclear instrumentation system see References [2] and [15]. Reference [2] is applicable to the power range only.

Solid State Logic Testing

The logic trains of the reactor trip system are designed to be capable of complete testing at power. ~~After the individual protection system channel testing is complete,~~ The logic matrices are tested from the train A and train B logic rack test panels. ~~This step provides overlap between the process and logic portions of the test program.~~ During this test, all of the logic inputs are actuated automatically in all combinations of trip and non-trip logic. Trip logic is not maintained sufficiently long enough to permit opening of the reactor trip breakers. The reactor trip undervoltage coils are 'pulsed' in order to check continuity. During logic testing of one train, the other train can initiate any required protective functions. Annunciation is provided in the control room to indicate when a train is in test (train output bypassed) and when a reactor trip breaker is bypassed. Details of the logic system testing are given in Reference [3].

A direct reactor trip resulting from undervoltage or underfrequency on the pump side of the reactor coolant pump breakers is provided as discussed in Section 7.2.1 and shown on Figure 7.2-1. The logic for these trips is capable of being tested during power operation. When parts of the trip are being tested, the sequence is such that an overlap is provided between parts so that a complete logic test is provided.

This design complies with the testing requirements of IEEE Standard 279-1971 and IEEE Standard 338-1971[10] as discussed in Table 7.1-1. Details of the method of testing and compliance with these standards are provided in References [1], [3], and [11].

The permissive and block interlocks associated with the reactor trip system and engineered safety features actuation system are given on Tables 7.2-2 and 7.3-3 and designated protection or 'P' interlocks. As a part of the protection system, these interlocks are designed to meet the testing requirements of IEEE Standards 279-1971 and 338-1971 as discussed in Table 7.1-1.

Testability of the interlocks associated with reactor trips for which credit is taken in the accident analyses is provided by the logic testing and

semi-automatic testing capabilities of the solid state protection system. In the solid state protection system the undervoltage coils (reactor trip) and master relays (engineered safeguards actuation) are pulsed for all combinations of trip or actuation logic with and without the interlock signals. Interlock testing may be performed at power.

Testing of the logic trains of the reactor trip system includes a check of the input relays and a logic matrix check. The following sequence is used to test the system:

1) Check of input relays

except when individual channels are tested in bypass with the reactor at power.

During testing of the process protection system and nuclear instrumentation system channels, each channel comparator/bistable is placed in a trip mode causing one SSPS input relay in train A and one in train B to de-energize. A contact of each relay is connected to a universal logic printed circuit card. This card performs both the reactor trip and monitoring functions. Each reactor trip input relay contact causes a status lamp and an annunciator on the control board to operate. Either the Train A or Train B input relay operation will light the status lamp and annunciator.

Each train contains a multiplexing test switch, one of which (either train) normally remains in the A + B position. The A + B position allows information to be transmitted alternately from each train to the control board. During testing a steady status lamp indicates that both trains are receiving a trip mode logic input for the channel being tested. A flashing lamp indicates a failure in one train. Contact inputs to the logic protection system such as reactor coolant pump bus underfrequency relays operate input relays which are tested by operating the remote contacts as described above and using the same type of indications as those provided for comparator/bistable input relays.

These tests are performed periodically in accordance with the Technical Specifications.

Actuation of the SSPS input relays provides the overlap between the testing of the logic protection system and the testing of those systems supplying the inputs to the logic protection system. Test indications are status lamps and annunciators on the control board. Inputs to the logic protection system are checked one channel at a time, leaving the other channels in service. For example, a function that trips the reactor when two out of four channels trip becomes a one out of three trip when one channel is placed in the trip mode. Both trains of the logic protection system remain in service during this portion of the test.

2) Check of logic matrices

Partial

to

Logic matrices are checked one train at a time. Input relays are not operated during this ~~portion of the~~ test. Reactor trips ~~from~~ the train being tested are inhibited with the use of the input error inhibit switch on the semi-automatic test panel in the train. Details of semi-automatic tester operation are given in Reference [3]. At the completion of the logic matrix tests, ~~one comparator/bistable in each channel of the process protection system or nuclear instrumentation is tripped to check closure~~ of the input error inhibit switch contacts, is checked using an appropriate test method (verification of existing trip status lamps/computer points or trip of one comparator/bistable for the appropriate protection system channel).

7.3.2.2 Compliance With Standards and Design Criteria

Discussion of the General Design Criteria (GDC) is provided in various sections of Chapter 7 where a particular GDC is applicable. Compliance with certain IEEE Standards and Regulatory Guides is presented in Section 7.1, Table 7.1-1. The discussion given below shows that the engineered safety features actuation system complies with IEEE Standard 279-1971, Reference [3].

7.3.2.2.1 Single Failure Criterion

The discussion presented in Section 7.2.2.2 (item 2) is applicable to the engineered safety features actuation system, with the following exception.

In the ESF, a loss of instrument power will call for actuation of ESF equipment controlled by the specific comparator that lost power (containment spray excepted). The actuated equipment must have power to comply. The power supply for the protection systems is discussed in Chapter 8. For containment spray, the final comparators are energized to trip to avoid spurious actuation. In addition, manual containment spray requires a simultaneous actuation of two manual controls. Two sets of manual containment spray controls are provided (one set/train and 2 switches/set). (Section 7.3.2.2.6 provides a discussion of protective action manual initiation capability.) This is considered acceptable because spray actuation on high-high containment pressure signal provides automatic initiation of the system via protection channels meeting the criteria in Reference [3]. Moreover, most ESF equipment (valves, pumps, etc.) can be individually manually actuated from the control board. Hence, a third mode of containment spray initiation is available. The design meets the requirements of Criteria 21 and 23 of the 1971 GDC.

7.3.2.2.2 Equipment Qualification

Equipment qualifications are discussed in Sections 3.10 and 3.11.

7.3.2.2.3 Channel Independence

The discussion presented in Section 7.2.2.2 (Item 6) is applicable. The ESF slave relay outputs from the solid state logic protection cabinets are redundant, and the actuations associated with each train are energized up to and including the final actuators by the separate ac power supplies which power the logic trains.

7.3.2.2.4 Control and Protection System Interaction

The discussions presented in Section 7.2.2.2 (Item 7) are applicable.

7.3.2.2.5 Capability for Sensor Checks and Equipment Test and Calibration

The discussions of system testability in section 7.2.2.2 (Items 9 ~~and~~ 10 and 11 are applicable to the sensors, process protection system circuitry, and logic trains of the ESFAS.

The following discussions cover those areas in which the testing provisions differ from those for the reactor trip system.

Testing of ESFAS

The ESF systems are tested to provide assurance that they will operate as designed and will be available to function properly in the unlikely event of an accident. The testing program meets the requirements of Criteria 21, 37, 40, and 43 of the 1971 GDC and RG 1.22 as discussed in Table 7.1-1. The tests described in this section and further discussed in Section 6.3.4 meet the requirements on testing of the ECCS as stated in GDC 37 except for the operation of those components that will cause an actual safety injection. The test, as described, demonstrates the performance of the full operational sequence that brings the system into operation, the transfer between normal and emergency power sources and the operation of associated cooling water systems. The safety injection and RHR pumps are started and operated and their performance verified in a separate test discussed in Section 6.3.4. When the pump tests are considered in conjunction with the ECCS test, the requirements of GDC 37 on testing of the ECCS are met as closely as possible without causing an actual safety injection.

Testing as described in Sections 6.3.4., 7.2.2.2 (Item 10) and this section provides complete periodic testability during reactor operation of all logic and components associated with the ECCS. The program is as follows:

1. Prior to initial plant operation, ESF system tests were conducted. (See Chapter 14.)

2. Subsequent to initial startup, ESF system tests are conducted during each regularly scheduled refueling outage.

3. During on-line operation of the reactor, all of the ESF process protection and logic circuitry are fully tested. In addition, essentially all of the ESF final actuators are fully tested. The remaining few final actuators whose operation is not compatible with continued on-line plant operation are checked by means of continuity testing.

Performance Test Acceptability Standard for the Safety Injection Signal and the Automatic Demand Signal for Containment Spray Actuation

During reactor operation the basis for ESFAS acceptability is the successful completion of the ~~overlapping~~ tests performed on the initiating system and the ESFAS. Checks of process indications verify operability of the sensors. Protection system checks and tests verify the operability of the circuitry ~~from the input of these circuits through to and including the logic input relays except for the input relays associated with the containment spray function which are tested during the solid state logic testing.~~ Solid state logic testing also checks the signal path from ~~and including~~ logic input relay contacts through the logic matrices and master relays and performs continuity tests on the coils of the output slave relays. Final actuator testing operates the output slave relays and verifies operability of those devices which require safeguards actuation and which can be tested without causing plant upset. A continuity check is performed on the actuators of the untestable devices. Operation of the final devices is confirmed by control board indication and visual observation that the appropriate pump breakers close and automatic valves have completed their travel.

Solid State Logic Testing

Except for containment spray channels, solid state logic testing is the same as that discussed in Section 7.2.2.2 (Item 10). ~~After the individual channel process testing is complete, the~~ Logic matrices are tested from the Train A and Train B logic rack test panels. ~~This step provides overlap between the process and logic portions of the test program.~~ During this test, each of the logic inputs is actuated automatically in all combinations of trip and non-trip logic. Trip logic is not maintained sufficiently long enough to permit master relay actuation; master relays are "pulsed" in order to check continuity. Following the logic testing, the individual master relays are actuated electrically to test their mechanical operation. Actuation of the master relays during this test will apply low voltage to the slave relay coil circuits to allow continuity checking but not slave relay actuation. Annunciation is provided in the control room to indicate when a train is in test. During logic testing of one train, the other train can initiate the required engineered safety features function. Additional details of the logic system testing are given in Reference [2].

Actuator Testing

At this point, testing of the initiation circuits through operation of the master relay and its contacts to the coils of the slave relays has been accomplished. Slave relays do not operate because of reduced voltage.

The ESFAS final actuation device or actuated equipment testing is performed from the engineered safeguards test cabinets, which are located near the SSPS logic cabinets. One test cabinet is provided for each of the two protection Trains A and B. Each cabinet contains individual test switches necessary to actuate the slave relays. To prevent accidental actuation, test switches are of the type that must be rotated and then depressed to operate the slave relays. Assignments of contacts of the slave relays for actuation of various final devices or actuators have been made such that groups of devices or actuated equipment can be operated individually during plant operation without causing plant upset or equipment damage. In the unlikely event that an ESFAS signal is initiated during the test of the final device that is actuated by this ESFAS signal, the device will already be in its safeguard position.

During this last procedure, close communication between the main control room operator and the operator at the test panel is required. Prior to the energizing of a slave relay, the main control room (MCR) operator assures that plant conditions will permit operation of the equipment that will be actuated by the relay. After the tester has energized the slave relay, the MCR operator observes that all equipment has operated as indicated by appropriate indicating lamps, monitor lamps, and annunciators on the control board, and, using a prepared check list, records all operations. He then resets all devices and prepares for operation of the next slave relay actuated equipment.

By means of the procedure outlined above, all ESF devices actuated by ESFAS initiation circuits, with the exceptions noted in Table 7.1-1 Note 2, are operated by the test circuitry.

Actuator Blocking and Continuity Test Circuits

Those few final actuation devices that cannot be actuated during plant operation (discussed in Section 7.1) have been assigned to slave relays for which additional test circuitry has been provided to individually block actuation of a final device upon operation of the associated slave relay during testing. Operation of these slave relays, including contact operations, and continuity of the electrical circuits associated with the final devices' control are checked in lieu of actual operation. The circuits provide for monitoring of the slave relay contacts and the devices' control circuit cabling, control voltage, and actuation solenoids. These continuity test circuits for components that cannot be operated online are verified by proving lights on the safeguards test cabinets. Interlocking prevents blocking the output from more than one output relay in a protection train at a time. Interlocking between trains is also provided to prevent continuity testing in both trains simultaneously; therefore the redundant device associated with the protection train not under test will be available in the event protection action is required.

Time Required for Testing

It is estimated that testing of a process protection system channel can be performed within one hour. Logic testing of either Train A or B can be performed in less than 2 hours. Testing of actuated components (including those which can only be partially tested) requires the involvement of a control room operator. It is expected to require several shifts to accomplish these tests. During this procedure automatic actuation circuitry will override testing, except for those few devices associated with a single slave relay whose outputs must be blocked. It is anticipated that continuity testing associated with a blocked slave relay could take several minutes. During this time the redundant devices in the other train would be functional.

Summary of On-Line Testing Capabilities

The procedures described provide capability for checking completely from the process signal to the logic cabinets and from there to the individual pump and fan circuit breakers or starters, valve contactors, pilot solenoid valves, etc., including all field cabling actually used in the circuitry called upon to operate for an accident condition. For those few devices whose operation could adversely affect plant or equipment operation, the same procedure provides for checking from the process signal to the logic rack. To check the final actuation device a continuity test of the individual control circuits is performed.

The procedure requires testing at various locations:

1. Process protection system testing and verification of comparator setpoints are accomplished at protection system racks. Verification of comparator relay operation is done at the MCR status lights, except for those channels which may be tested in bypass,
2. Logic testing through operation of the master relays and low voltage application to slave relays is done at the logic racks test panels.

7.3.2.2.6 Manual Initiation, Reset and Blocks of Protective Actions

Capability is provided Phase A at the system level for and manual initiation of reactor trip, safety injection, containment isolation ~~X~~ containment spray (along with Phase B containment isolation ~~B~~ and containment ventilation isolation), ~~and diesel generator start.~~ Manual reset capability of these protective actions is also provided. This design meets the requirements of IEEE 279-1971, Section 4.17 and Regulatory Guide 1.62.

However, the manual initiation of both steamline isolation, and switchover from injection to recirculation following a loss of primary coolant accident are performed at the component level only, so that the initiation of these two systems is not specifically designed to meet Section 4.17 of IEEE 279-1971.

The main steam isolation valves are included in the plant design to mitigate the consequences resulting from steam line breaks, and protection logic is provided in the plant design to automatically close the valves when necessary. There are four individual main steam isolation valve momentary control switches (one per loop) mounted on the control board. Each switch when actuated will isolate one of the main steam lines.

The inadvertent manual closure of any single MSIV or the simultaneous closure of all MSIV's both create Condition II events. If all valves are closed simultaneously when the plant is operating at full power, a loss-of-load accident will result with a consequent primary and secondary side pressure increase, reactor trip and secondary side safety valve release. In the event that only one valve closes on inadvertent manual actuation when the plant is operating at full power, the steam flow in the other loops will increase in an attempt to restore full power steam flow. The non-symmetric steam flow can cause an increase in reactor power due to the non-symmetric loop temperatures and to the moderator temperature coefficient of reactivity. Consequently margins to DNB are reduced.

Since remote individual closure of the steam line isolation valves from the control room is required for operational reasons, it is not felt that putting additional manual capabilities which can lead to the inadvertent closure of all steam stop valves is in the direction of reactor safety.

The manual operations performed at the component level for switchover from safety injection to cold leg recirculation following a loss of primary coolant accident are described in Table 6.3-3. An evaluation of the associated time sequences is presented in Table 6.3.-3a. These manual operations cause multiple valve realignments to ensure the proper flow paths. An inadvertent manual actuation of these valves at the system level prior to the conditions required for switchover would cause multiple valve misalignments, which would result in serious consequences to plant safety. The consequences of an inadvertent manual actuation of a single device at the component level would be significantly less serious and more easily recoverable. System level actuation of switchover from injection to recirculation is not considered to be a safety enhancement.

The manual block features associated with pressurizer and steam line safety injection signals provide the operator with the means to block initiation of safety injection during plant startup or shutdown/cooldown. These block features meet the requirements of Paragraph 4.12 of IEEE Standard 279-1971 in that automatic removal of the block occurs when plant conditions require the protection system to be functional.

7.3.2.3. Further Considerations

In addition to the considerations given above, a loss of one train of auxiliary control air or loss of a component cooling water train to vital

3. Plant Computer

Communication between the plant computer and ERFDS is one way to the ERFDS to access any required points in the plant computer data base.

REFERENCES

1. U. S. NRC Regulatory Guide 1.97, Rev. 2 (December 1980) and Rev. 3 (May 1983) "Instrumentation for Light-Water-Cooled Nuclear Power Plants to Assess Plant and Environs Conditions During and Following an Accident".

2. NUREG 0696, Functional Criteria for Emergency Response Facilities, dated February 1981.

3. NUREG-0737, Supplement 1, Requirements for Emergency Response Capability, Generic Letter 82-33, dated December 17, 1982.

4. Regulatory Guide, 1.23, Onsite Meteorological Programs (Safety Guide 23) Revision 0.

5. Regulatory Guide 1.47, Bypassed and Inoperable Status Indication for Nuclear Power Plant Safety Systems, Revision 0.

6. IEEE-Standard 279-1971, Criteria for Protection Systems for Nuclear Power Generating Stations (ANSI-N42.7-1972).

7. NUREG-1394, Emergency Response Data System Implementation.

8. Branch Technical Position ICSB-21, Guidance for Application of Regulatory Guide 1.47.

9. TVA letter to NRC dated August 31, 1990, Watts Bar Nuclear Plant (WBN) Conformance to Regulatory Guide (RG) 1.97 Revision 2. (RIMS L44 900831 804)

10. TVA letter to NRC dated October 29, 1991, Watts Bar Nuclear Plant WBN-Emergency Response Capability, Regulatory Guide 1.97, Revision 2 - Request for Additional Information Response. (RIMS T04 911029 848)

11. NUREG-0847, Supplement 9, "Safety Evaluation Report Related to the Operation of Watt Bar Nuclear Plant, Unit 1 and 2," June 1992.

12. "General Design Criteria for Nuclear Power Plant," Appendix A to Title 10 CFR 50, Criterion 13, 19, and 64.

13. TVA letter to NRC dated May 9, 1994, Watts Bar Nuclear Plant (WBN) - Regulatory Guide (RG) 1.97, Revision 2, Postaccident Monitoring System (PAM) - Supplemental Response (RIMS T04 940509 901).

14. TVA Letter to NRC dated April 21, 1995, Watts Bar Nuclear Plant (WBN) Units 1 & 2 - Regulatory Guide (RG) 1.97, Revision 2, Post-Accident Monitoring System (PAM) - Supplemental Response (RIMS T04 950421 117).

15. TVA Letter to NRC dated July 18, 1995, Watts Bar Nuclear Plant (WBN) Units 1 & 2 - Regulatory Guide 1.97, Revision 2, Post-Accident Monitoring System (PAM) - Supplemental Response

7.5-13

TABLE 7.5-2
(Sheet 1 of 17)

REGULATORY GUIDE 1.97
POST ACCIDENT MONITORING VARIABLES LIST

LEGEND

The following table of variables provides a listing of specific design requirements for the PAM instruments. The table represents the minimum required to conform to Regulatory Guide (RG) 1.97, Revision 2. Additional qualification may be provided as a result of other plant, system, or design requirements. The topics described are:

- Variable Name
- Type and Category
- Redundant Channels
- Range, Range Units
- Notes

Type and Category

The variable's type(s) and associated category are identified. Entries in this column are derived from the Type selection analyses and RG 1.97.

Redundancy - The number of instrument channels required to monitor the variable. For Category 1 variables, the number of channels is determined from the PAM single failure analysis. Diverse indication used to supplement or replace redundant information is also identified in Note 1.

Range - The required range and engineering units of the instrumentation are developed in the Type selection analyses or the required range and accuracy analysis. The radiation monitor ranges may reflect the interpreted range and not the equipment's scale.

Notes - Additional information is provided for clarification including any deviations from R.G. 1.97 R2. The deviations are found in references 9, 10, 11, 13, 14.

Table 7.5-2
(Sheet 15 of 17)

REGULATORY GUIDE 1.97
POST ACCIDENT MONITORING VARIABLES LIST

VAR NUM	Variable Name	Type/Category	Redundant Channels	Minimum Range From	Minimum Range To	Range Units	Notes
97h	Reactor Coolant Gamma Spectrum	E3	NA	NA	NA	NA	Isotopic Analysis
98	CONTAINMENT AIR						
98a	Containment Air Hydrogen	E3	NA	0	10	%	Measured by Hydrogen Analyzer Deviation #2
98b	Oxygen Content		NA	NA	NA	NA	Deviation #27
98c	Gamma Spectrum Sample	E3	NA	NA	NA	NA	Isotopic Analysis
99	Shield Building Vent Flow	E2	1 Channel Per Unit	0	28,000 ~~30,800~~	CFM	
100	Shield Building Vent Monitor (Particulate And Iodine)	E3	1 Channel Per Unit	1.0E-3	1.0E2	uCi/cc	Sampling With Onsite Analysis Capability
101	Steam Generator Discharge Vent (Flow Rate and Noble Gas)	E2	1 Channel Per Release Point	Note 4	Note 4	Note 4	

System Operation

Each 6.9-kV shutdown board can be powered through any one of four shutdown board supply breakers. For normal operation, power is supplied from the common station service transformers C and D through the common station service switchgear C and D circuits. The breakers are shown normally closed on Figure 8.1-2a. Shown normally open are the breakers connecting the alternate source (offsite) power circuit to the shutdown board (via common station service transformers C or D), the breaker connecting the shutdown board to a separate standby diesel generator and the maintenance circuit to the shutdown boards (via the unit boards). During normal operation, the alternate feeder circuit breaker may be placed into service should the normal power supply become disabled.

Loss of voltage and degraded voltage from the normal source will result in an automatic transfer to the standby diesel generator power supply. Bus transfers from the normal to the alternate source shall be automatic fast-bus transfer initiated by common-station-service-transformer protection devices. Return to the normal supply is manual only. All manual transfers are fast transfers completed in approximately six cycles. Manual transfer may be effected between any incoming feeder breakers. Manual transfers are made by holding the preferred incoming feeder-breaker control switch in the "Close" position while the source-breaker control switch is placed in the "Trip" position.

During conditions where neither nuclear unit nor preferred (offsite) power is available, each shutdown board is energized from a separate standby diesel generator.

Each 6.9-kV shutdown board is equipped with loss-of-voltage and degraded-voltage relaying. The loss-of-voltage and degraded-voltage relays initiate bus transfers from the normal supply to the standby diesel generator supply. When a 6.9-kV shutdown board is supplied from an alternate supply, the loss-of-voltage and degraded-voltage relays will initiate automatic bus transfer to the standby diesel generator supply. Voltage relays monitor each source and permit connection only if adequate voltage is available. A typical transfer scheme is shown schematically in Figure 8.3-5 for 6.9-kV shutdown board 1A-A.

To protect the Class 1E equipment (motors, etc.), each 6.9-kV Class 1E shutdown board is provided with one set of degraded-voltage relays and three sets of undervoltage relays. The degraded-voltage relays (27 DAT, DBT, DCT) have a voltage setpoint of 96% of 6.9 kV (nominal, decreasing).

These relays are arranged in a two-out-of-three coincidence logic (Figure 8.3-5A) to initiate a 6-second (nominal) time delay. At the end of 6 seconds, if the voltage is still low, an alarm will be annunciated in the Control Room, a trip of the 6.9-kV shutdown-board supply breaker will occur, load-shedding from this board and selected loads from the 480V shutdown board will be initiated, and the 480V shutdown-board current-limiting reactor-bypass breaker will close.

The undervoltage protection consists of three sets of relays. The first set of these relays (27LVA, LVB, LVC) has a voltage setpoint of 87% of 6.9 kV (nominal, decreasing). These relays are arranged in a two-out-of-three coincidence logic (Figure 8.3-5A) to initiate a time delay that is set ~~between~~

at 0.75 seconds. ~~0.25 and 0.5 seconds~~. At the end of this time delay, if the voltage is still low, a trip of the 6.9-kV shutdown-board supply breaker will occur. Once the supply breakers have been opened, a second set of induction disk-type undervoltage relays, 27D, which has a voltage setpoint of 70% of 6.9-Kv (nominal, decreasing) and an internal time delay of 0.5 seconds at zero volts, will start the diesel generator. A third set of induction disk-type undervoltage relays, 27S, which has a voltage setpoint of 70% of 6.9-Kv (nominal decreasing) and an internal time delay of 3 seconds at zero volts, will initiate load shedding of ~~the~~ loads on the 6.9-Kv shutdown board, selected loads on the 480V shutdown board, and closure of the 480V shutdown board current-limiting reactor bypass breaker. The time delays associated with the 27DAT, DBT, and DCT and with the 27LVA, LVB, and LVC relays are designed to allow for normal voltage transients on the system.

To protect the Class 1E equipment from a sustained over-voltage, each 6.9-Kv Class 1E bus per unit is provided with a set of two solid-state overvoltage relays, 59-0. These relays are arranged in a one-out-of-two logic which annunciates in the main control room. The relays have a nominal voltage setpoint of 7260 volts ± 1% (110% of motor rated voltage). Upon receipt of the overvoltage alarm, the operator takes the necessary action to reduce the voltage.

The loss of voltage load shedding relays are not bypassed when on diesel power, but will remain in the circuit at all times. WBNP's basis for retention of this feature is that it provides for automatic resequencing of the loads following any temporary loss of bus voltage. Since the loss-of-voltage load shedding relay setpoint is fixed at ~~4860~~ 4830 volts ± 5% (70% of 6.9 Kv) with an inverse time delay, the starting of the largest driven load will not cause actuation of the load shedding feature. Therefore, the operation of the load shedding relay system is:

1. To shed the loads to prevent overloading the diesel generator and close the 480V shutdown-boards current-limiting reactor-bypass breaker.

2. Allow the diesel generator to recover to rated speed and voltage.

3. And reconnect the loads in proper sequence.

Overcurrent and differential overcurrent protective relays are provided for each shutdown board to lockout all supply breakers if the loss of voltage is caused by overload or an electrical fault. This prevents transfer of a fault between offsite power circuits or to the diesel generator. This minimizes the probability of losing electrical power from the transmission network on the onsite electrical power source.

Each of the offsite preferred power sources is monitored by an undervoltage relay. In the event of a loss of voltage on either 6.9-Kv start bus A or B or a 161-Kv transmission system contingency (load shedding trip circuits are manually enabled) and both unit 1 and unit 2 tripped, the load shedding scheme will be initiated. This load shedding scheme will trip off part of the BOP loads. The alternate supply breakers on 6.9-Kv unit boards 1C, 1B, 2C, and 2B; 6.9-Kv RCP boards 1C, 1D, 2C and 2D; and 6.9-Kv common board A, panel 16 will be tripped and locked out. The load shedding scheme is armed when both units are operating and two redundant trip and lockout circuits are provided for each circuit breaker being load shed. These redundant circuits have

6900-480-Volt Pressurizer Heater Transformers 1A-A, 1B-B, 1C, 1D, 2A-A, 2B-B, 2C, and 2D

These transformers are located in the Auxiliary Building at elevation 782.0. Transformers 1A-A, 2A-A, 1D and 2D are located in one room in the unit 1 area. Transformers 1B-B, 2B-B, 1C and 2C are located in one room in the unit 2 area (Figure 8.3-2).

System Operation

Each 6.9-kV shutdown board can be powered through any one of four shutdown board supply breakers. For normal operation, power is supplied from the 6.9-kV common station service transformers C and D through the common station service Switchgear C and D circuits. The breakers are shown normally closed on Figure 8.1-2A. Shown normally open are the breakers connecting the alternate offsite power circuits to the shutdown board (via common station service transformers C and D), the breaker connecting the shutdown board to a diesel generator for standby operation, and the maintenance circuit to the shutdown boards (via the unit boards). However, the maintenance source shall only be used when both units are in the cold shutdown mode.

For a discussion of the automatic transfer of the shutdown boards see Section 8.2.2.

When the preferred (offsite) power is not available, each shutdown board is energized from a separate standby diesel generator.

Each 6.9-kV shutdown board is equipped with loss-of-voltage and degraded-voltage relaying. The loss-of-voltage and degraded-voltage relays initiate a transfer to the standby diesel generator. When a 6.9-kV shutdown board is supplied from an alternate supply, the loss-of-voltage and degraded-voltage relays will also initiate automatic transfer from the alternate to the standby diesel-generator supply. Voltage relays monitor each source and permit connection only if adequate power is available. A typical transfer scheme is shown in Figure 8.3-5 for 6.9-kV shutdown board 1A-A.

To protect the Class 1E equipment (motors, etc.), each 6.9-kV Class 1E shutdown board is provided with one set of degraded-voltage relays and three sets of undervoltage relays. The degraded-voltage relays (27DAT, DBT, and DCT) have a voltage setpoint of 96% of 6.9-kV (nominal, decreasing).

The relays are arranged in a two-out-of-three coincidence logic (Figure 8.3-5A) to initiate a six-second (nominal) time delay. At the end of 6 seconds if the voltage is still low, an alarm will be annunciated in the Control Room, a trip of the 6.9-kV shutdown board supply breaker will occur, load shedding from this board and selected loads from the 480V shutdown board will be initiated, and the 480V shutdown-board current-limiting reactor bypass breaker is closed.

The undervoltage protection consists of three sets of relays. The first set of these relays (27LVA, LVB, LVC) has a voltage setpoint of 87% of 6.9-kV (nominal, decreasing). These relays are arranged in a two-out-of-three coincidence logic (Figure 8.3-5A) to initiate a time delay that is set ~~between 0.25 and 0.5~~ at 0.75 seconds. At the end of this time delay, if the voltage is still low, a trip of the 6.9-kV shutdown board supply breaker will occur. Once the supply breakers have been opened, a second set of induction disk-type

undervoltage relays, 27D, which has a voltage setpoint of 70% of (nominal) 6.9-kV (nominal, decreasing) and an internal time delay of 0.5 seconds at zero volts, will start the diesel generator. A third set of induction disk-type undervoltage relays, 27S, which has a voltage setpoint of 70% of (nominal) 6.9-kV (nominal, decreasing) and an internal time delay of 3 seconds at zero volts, will initiate load shedding of the loads on the 6.9-kV shutdown board selected loads on the 480V shutdown boards, and closure of the 480V shutdown-board current-limiting reactor-bypass breaker.

The time delays associated with the 27DAT, DBT, DCT and the 27LVA, LVB, LVC relays are designed to allow for normal voltage transients on the system.

To protect the Class 1E equipment (motors, etc.) from a sustained overvoltage, each 6.9-kV Class 1E bus is provided with a set of two solid-state overvoltage relays, 59-0. These relays are arranged in a one-out-of-two logic which annunciates in the main control room. The relays have a nominal voltage setpoint of 7260 volts ± 1% (110% of motor rated voltage). The operator takes the necessary action to reduce the voltage.

The loss-of-voltage load-shedding relays are not bypassed when on diesel power, but will remain in the circuit at all times. TVA's basis for retention of this feature is that it provides for automatic resequencing of the loads following any temporary loss of bus voltage. Since the loss-of-voltage load-shedding relay setpoint is fixed at ~~4860~~ 4830 volts ± 5% (70% of 6.9-kV) with an internal time delay of 3 seconds at zero volts, the starting of the largest driven load will not cause actuation of the load-shedding feature. Therefore, the operation of the load-shedding relay system is:

1. To shed the loads to prevent overloading the diesel generator and close the 480V shutdown-boards current-limiting reactor-bypass breaker,

2. To allow the diesel generator to recover to rated speed and voltage, and

3. To reconnect the loads in proper sequence.

Overcurrent and differential-overcurrent protective relays are provided for each shutdown board to lockout all supply breakers if the loss of voltage is caused by overload or an electrical fault. This prevents transfer of a faulted bus between offsite power circuits or to the diesel generator. This minimizes the probability of losing electrical power from the transmission network or the onsite electrical power source.

A loss of voltage on the 6.9-kV shutdown board starts the diesel generator and initiates logic that trips the supply feeder breakers, all 6.9-kV loads (except the 480V shutdown board transformers), and the major 480-V loads. The bypass breaker for the 480-V shutdown-boards current-limiting reactor is also closed as part of this logic. Table 8.3-2 shows the loads that are automatically tripped. Figures 8.3-6 through 8.3-13 show the load stripping schematically. When the diesel generator has reached rated speed and voltage, the generator will be automatically connected to the 6.9-kV shutdown board bus. (Refer to Figure 8.3-14B, 14C, 14D and 14E). This return of voltage to the 6.9-kV shutdown bus initiates logic which connects the required loads in sequence. Table 8.3-3 shows the order of applied loads. The standby (onsite) power system's automatic sequencing logic is designed to automatically connect the required loads in proper sequence should the logic receive an accident signal prior to, concurrent with, or following a loss of all nuclear unit and preferred (offsite) power.

Vital Power System Load Data

Figures 8.3-37 through 8.3-40 list all loads supplied from the vital ac system. Table 8.3-11 contains a summary of the loading on each vital instrument power board/inverter. The basis for the load data was determined from manufacturer's data. The capability of the vital a.c. system to supply power to its loads is verified by analyses in Section 8.3.1.2.2.

Design Bases and Criteria for Safety-Related Motors, Switchgear Interrupting Capacity, Circuit Protection, and Grounding.

The design bases for safety-related motors are the applicable Onsite Power System design bases listed in Section 8.1.4. In particular, bases 1, 3, 4, 5, and 6 apply to safety-related motors. The criteria which are applied to motor size, starting torque, and insulation are as follows.

Motor Size and Starting Torques

Each motor has adequate capacity and operating characteristics for all conditions of starting and running which the connected equipment may impose.

The motor nameplate horsepower rating is not normally exceeded when the connected equipment is operating at rated capacity. The motor horsepower rating, based on nameplate or vendor data, may be exceeded on a continuous basis up to its service factor rating for specific cases after a design review to ensure that the temperature limits of the insulation system are not exceeded.

Motor Insulation

For most applications insulation is Class B. Motors in areas which are subject to unusual operating conditions either during normal, emergency, or accident operation are designed to be suitable for operation in these environments. These include conditions such as gamma radiation and high humidity, temperature, and pressure.

Interrupting Capacity of Distribution Equipment

The criteria for selecting the interrupting capacity of switchgear are as set forth in ANSI Standard C37.010 for 6900-volt circuits and C37.13, Section 13-9.3.5, for 480V circuits. No circuit interrupter is applied in a circuit where it would be required to interrupt a current exceeding its interrupting rating.

Motors rated at and above 400 horsepower are supplied at 6900 volts. The switchgear interrupting rating is 500 MVA, or a maximum of 41,000 amperes. Motors below 400 horsepower are supplied at 480 volts. The smaller motors, in general 50 horsepower and below, are fed from 480V motor control centers. Larger motors are usually fed from 480V metal-enclosed switchgear (load centers), unless frequency of operation or location of motor relative to a feeder board indicate otherwise. Current-limiting reactors are provided in the 480-V shutdown boards, between the 3200A bus and the 1600A bus, to limit the maximum fault current on the 1600A bus and the load equipment (MCC's, etc). The current-limiting reactors are bypassed when the respective 6.9-kV bus is fed from the standby diesel generator since the maximum fault current

Criteria separation distances are addressed by spatial means or installation of approved barriers, or analysis, or a combination of these. Exceptions to the criteria require documented justification and are referenced in the design criteria document.

WBNP-86

fittings where necessary to prevent exceeding the minimum cable bend radius. However, nominal spacing is restored as soon as practical. Low-voltage power cables rated 600V and below are routed on cable trays with other power cables of the same voltage. Low-voltage power cable tray fill is limited to a maximum of 30% of the cross-sectional area of the tray, except when a single layer of cable is used. Cable tray fill for control and instrumentation cables is limited to a maximum fill of 60% of the cross-sectional area of the tray. Cable trays that exceed the maximum fill require exceptions and their justifications to be documented in the design criteria.

and referenced

8.3.1.4.2 Cable Routing and Separation Criteria

Electrical wiring for the GSPS, which includes the RPS, ESF, ESAS, and Class 1E electric systems, are segregated into separate divisions of separation (channels or trains) such that no single event, such as a short circuit, fire, pipe rupture, missile, etc., is capable of disabling sufficient equipment to prevent safe shutdown of the reactor, removal of decay heat from the core, or to prevent isolation of the primary containment. The degree of separation required for GSPS electrical cables varies with the potential hazards in a particular zone or area of the power plant. These criteria do not attempt to classify every area of the nuclear plant, but specifies minimum requirements and guidelines that have been applied with good engineering judgment as an aid to prudent and conservative layout of electrical cable trays, wireways, conduits, etc., through the plant (both inside and outside the containment). When a varience to the following minimum requirements exists, an analysis and/or exception is issued.

Mechanical Damage (Missile) Zone

Zones of potential missile damage exist in the vicinity of heavy rotating machinery or near other sources of mechanical energy, such as pipe whip, steam release, or pipes carrying liquids under high pressure. Layout and arrangement of cable trays, conduit, wireways, etc., are such that no locally generated force or missile can disable sufficient equipment to prevent safe shutdown of the reactor, removal of decay heat from the core, or to prevent isolation of the primary containment. In rooms or compartments having heavy rotating machinery, such as the reactor coolant pumps, the reactor feedwater turbines, or in rooms containing high pressure feedwater piping or high-pressure steam lines such as exist between the steam generators and the turbine, a minimum separation of 20 feet, or a minimum 6-inch-thick reinforced concrete wall is provided between trays containing cables of different divisions of separation. In an area containing an operating crane, such as the upper compartment of the reactor building, there is a minimum horizontal separation of 20 feet or a minimum 6-inch-thick reinforced concrete wall or barrier between trays containing cables of the different divisions of separation.

Fire Hazard Zone

Electrical cabling required to safely shutdown the plant in the event of a fire is protected in accordance with the separation criteria of 10 CFR 50, Appendix R, Section III.G.2 (see Fire Protection Report and FSAR Section 9.5.1). Other ESF cabling are arranged so as to minimize the possibility of a fire in one division from damaging cables in another division. Routing of cables for engineered safety features, power or control, through rooms or spaces where there is potential for accumulating large quantities (gallons) of oil or other combustible fluids through leakage or rupture of lube oil or cooling system has been avoided. In cases where it is impossible to provide other routing, only one division of engineered safety features cables is

the cable spreading room,

allowed in any such space, and the cables are protected from dripping oil by the use of conduits or flange covered cable trays designed to prevent oil from reaching the cables. No engineered safety features cables are routed through rooms containing oil storage tanks. In any room (except the auxiliary instrument room and the annulus) or space in which the only source of fire is of an electrical nature, cable trays carrying cables of different divisions of separation have a minimum horizontal separation of 3 feet if no physical barrier exists between the trays. If a horizontal separation of at least 3 feet is not attainable, a fire-resistant barrier is provided. This barrier extends at least 1 foot above (or to the ceiling) and 1 foot below (or to the floor) the line-of-sight communication between trays carrying redundant division cables. Vertical stacking of trays carrying cables of different divisions of separation of engineered safety features is avoided whenever possible. However, whenever it becomes necessary to stack open-top trays vertically, one above the other, there is a minimum vertical separation of 5 feet between trays carrying cables of different divisions. The lower tray has a solid steel cover and the upper tray has a solid steel bottom. If 5 feet is not attainable, then a fire-resistant barrier is provided. This barrier extends a minimum of 3 feet (or to nearest wall) on each side of the tray edge. In cases where trays carrying cables of different divisions of separation cross, there is a minimum vertical separation of 12 inches (tray top of lower tray to tray bottom of upper tray) provided the bottom tray is covered with a solid steel cover and the top tray has a solid steel bottom for a minimum distance of 3 feet on each side of the tray crossing or to the nearest wall, floor, or ceiling on each side of the tray crossing. This 12 inch separation may be reduced to 1 inch provided the trays are totally enclosed (solid top & solid bottom) for the distance specified above.

Cable Spreading Room

The cable spreading room is the area provided under the Main Control Room where cables leaving the various control board panels are dispersed into cable trays or conduits for routing to all parts of the plant. Since the cable spreading room is protected from missiles by its Seismic Category I walls and there are no internal sources of missiles, such as high-pressure piping and heavy rotating machinery, the only potential source of damage to redundant cables is from fire. Smoke detectors and a sprinkler fire protection system have been installed ensuring that potential for fire damage to cables will be minimized in the cable spreading room. Where Engineered Safety Features cables of different divisions (train A or train B) of separation approach the same or adjacent unit control panel (see the Main Control Room discussion) with spacing less than ~~3 feet,~~ 1 foot these cables are run in metal (rigid or flexible) conduit or enclosed wireway to a point where ~~3 feet~~ 1 foot of separation exists. A minimum horizontal separation of ~~3 feet~~ separates trays carrying cables of different divisions (channels or trains) if no physical barrier exists between the trays. Where a horizontal separation of ~~3 feet~~ does not exist, a fire-resistant barrier extends at least 1 foot above (or to the ceiling) and 1 foot below (or to the floor) the line-of-sight communication between trays carrying redundant division cables. Vertical stacking of cable trays carrying cables of different divisions of separation has been avoided whenever possible. However, whenever it becomes necessary to stack open trays vertically, one above the other, there is a minimum vertical separation of ~~5~~ 3 feet between trays carrying cables of different divisions of separation. The lower tray has a solid steel cover and the upper tray has a solid steel bottom. If ~~5~~ 3 feet is not attainable, then a fire-resistant barrier is provided. This barrier extends a minimum of 3 feet (or to the nearest wall) on each side of the tray edge.

A conduit carrying cables of one division may cross or run parallel to a cable tray containing cables of a redundant division, provided a minimum separation greater than one inch exists between tray and conduit. * INSERT No. 1

A conduit carrying cables of one division may cross or run parallel to a cable tray containing cables of a redundant division with one inch separation, provided the tray has a cover, solid bottom or side adjacent to the conduit. The tray cover or solid bottom shall extend a minimum of three feet or to the nearest wall, floor, or ceiling on each side of the centerline of the conduit, for conduits that cross cable trays. Likewise, when conduits run parallel with cable trays, the tray cover or solid bottom shall extend a minimum three feet beyond each end of the influenced portion of conduit, or until the tray terminates or penetrates a wall, ceiling, or floor.

If the above separation requirements are not attainable, a barrier consisting of 1/2 inch minimum thickness of Marinite (or its equivalent) may be used between the raceways, provided the trays are enclosed as specified above. The barrier shall be continuous until spacial separation is attained and extend one inch on both sides of the raceway (tray or conduit) as applicable (or to the wall, floor, or ceiling, as applicable).

Main Control Room

Redundant safety-related cables enter the Main Control Room through separate floor openings. Each unit control panel, which has redundant components, has a minimum of three separate vertical and/or horizontal risers (enclosed wireways) from each of the respective terminal block groups to the control room floor (or bottom of walk space). Non-safety-related cables are routed through one or more riser(s), preferably near the center of the control panel. The redundant safety-related cables (train A or train B separation) are routed separately in each of the other two or more risers, preferably one near each end of the control panel. Where possible, risers of like trains of separation have been arranged such that the adjacent panel has a corresponding like train riser (i.e., train A in one panel has train A nearest it in the adjacent panel).

Separation of Class 1E Electric Equipment

All Class 1E electric equipment has physical separation, redundancy, and a controlled environment to prevent the occurrence of an external event that would threaten the safe shutdown of the reactor. No internally generated fault can propagate from Class 1E electric equipment to its redundant equipment during any design basis event. All Class 1E electric equipment that has to operate during a flood has been located above maximum possible flood level unless it is designed to operate submerged in water.

The Class 1E electrical loads are separated into two or more redundant load divisions (channels or trains) of separations. The number of divisions has been determined by the number of independent sources of power required for a given function. The electric equipment that accommodates these redundant divisions is separated by sufficient physical distance or protective barriers. The separation distance has been determined by the severity and location of hazards. The environment in the vicinity of the equipment is controlled or protection provided such that no environmental change or accident will adversely affect the operation of the equipment.

The physical identification of safety-related electrical equipment is in accordance with Section 8.3.1.3.

INSERT No. 5 CHANGED BY S2

AND CABLES IN FREE AIR

ADDED 64 S1

*Reliability of Class 1E circuit breakers protecting cables in open top Class 1E cable trays is enhanced by periodic testing.

The results of a protection device reliability analysis is discussed in Appendix 8E. This analysis, based on data taken from IEEE 500-1977, demonstrates that each of the following protective schemes has a reliability which is essentially equivalent to that of a single circuit breaker periodically tested:

1. A circuit breaker and fuse in series, or

2. Two circuit breakers in series.

In addition to these protective schemes, IEEE 500-1977 data verifies that for this application a single fuse with no periodic testing has a failure rate which is approximately equal to the failure rate of two circuit breakers in series (see Part B analysis of Appendix 8E). Therefore, a single fuse when used as an interrupting device for cables, does not require periodic testing due to its stability, high reliability, and lack of drift. Thus, WBNP concludes that any one of the following protective schemes for Class 1E cables provides a reliable means of meeting the intent of Regulatory Guide 1.75 to not degrade redundant Class 1E cables:

INSERT No. 1

INSERT No. 2 CHANGED BY S2

1. A circuit breaker and fuse in series

2. Two circuit breakers in series

3. A single fuse

4. A single circuit breaker periodically tested

INSERT No. 3 S2

The only exceptions to testing single Class 1E circuit breakers will be where physical separation of specific circuits is shown to meet the requirements identified in IEEE 384-1992. WBNP is not committed to IEEE 384-1992 but will use it as a criteria for exempting individual circuits from circuit breaker testing.

INSERT No. 4 S2

The molded case circuit breakers actuated by fault currents and ~~installed to ensure the intent of Regulatory Guide 1.75 is met for Class 1E circuits~~ will have at least 10% of each type breaker tested every 18 months and will have the recommended maintenance performed on 100% of the breakers within the past 60 months. For any breaker failure or breaker found inoperable, an additional 10% of that type will be tested until no more failures are found or all circuit breakers of that type have been tested. The test will ensure operability by simulating a fault current with an approved test set.

P THE MOTOR OPERATED VALVE CIRCUITS THAT UTILIZE TWO CIRCUIT BREAKERS IN SERIES WERE DESIGNED TO MAINTAIN THEIR SAFE OPERATING POSITION BY ADMINISTRATIVELY CONTROLLING ONE OF THE CIRCUIT BREAKERS IN THE OPEN POSITION. SINCE THE MOTOR OPERATORS ARE ELECTRICALLY ISOLATED FROM THEIR POWER SUPPLY DURING NORMAL OPERATION PERIODIC TESTING WILL NOT BE PERFORMED ON THE CIRCUIT BREAKERS.

INSERT No.2

WBNP concludes that any one of the following protective schemes provides a reliable means of protecting cables in conduits from electrical faults on cables in open top trays and cables in free air of the opposite train, Thus meeting the intent of Regulatory Guide 1.75 to not degrade redundant Class 1E cables.

INSERT No. 3

that protect cables in conduits from electrical faults on cables in open top trays and cables in free air of the opposite train

INSERT No. 4

protect cables in conduits from electrical faults on cables in open top trays and cables in free air of the opposite train

INSERT No. 5

Electrical protection provides additional assurance that cables in conduits carrying cables of one division will not be damaged by an electrical fault on cables in open top trays or cables in free air of a redundant division. The reliability of circuit breakers that provide the electrical protection for some of these cables is enhanced by periodic testing.

Tray and conduit systems located in Category I structures have seismic supports. In addition, a non-safety related cable may be routed with those for essential circuits, provided that the cable, or any cable in the same circuit, has not been subsequently routed onto another tray containing a different division of separation of essential cables.

Nondivisional associated cables that are routed in cable trays designated for Class 1E cables are treated the same as the Class 1E cables. The nondivisional cables are subject to the same flame retardant, cable derating, splicing restrictions, and cable tray fill as the Class 1E cables. Furthermore, these non-Class 1E cables are qualified in the same manner as Class 1E cables and/or protected by one of the protective schemes discussed below. Based on the results of the analyses of associated circuits, it is demonstrated that Class 1E circuits are not degraded.

These analyses include a review of protective devices for NONDIVISIONAL ASSOCIATED ~~non-Class 1E~~ medium voltage power, low voltage power, and control level cables routed in nondivisional raceways in Category I structures. Each of these cables are provided short circuit protection by either a single circuit breaker periodically tested, a single fuse, a circuit breaker and fuse in series, two circuit breakers in series, or two fuses. Energy produced by electrical faults in non-Class 1E cables routed in medium-level signal and low-level signal raceways is considered insignificant and is considered no challenge to Class 1E cables.

The results of the protective device application analysis for associated and non-Class 1E cables are discussed in Appendix 8E. This analysis, based on data taken from IEEE 500-1977, demonstrates that each of the following protective schemes has a reliability which is essentially equivalent to that of a single circuit breaker periodically tested:

1. A circuit breaker and fuse in series, or

2. Two circuit breakers in series.

In addition to these protective schemes, IEEE 500-1977 data verifies that for this application a single fuse with no periodic testing has a failure rate which is approximately equal to the failure rate of two circuit breakers in series (see Part B analysis of Appendix 8E). Therefore, a single fuse when used as an interrupting device for the above cables, does not require periodic testing due to its stability, high reliability, and lack of drift. To further support this position, TVA takes credit for installed cable coating as previously discussed. Thus, WBNP concludes that any one of the following protective schemes for associated and non-Class 1E cables provides a reliable means of meeting the intent of Regulatory Guide 1.75 to not degrade Class 1E cables:

1. A circuit breaker and fuse in series
2. Two circuit breakers in series
3. A single fuse
4. A single circuit breaker periodically tested

All of the installed protective devices and those added to further protect the associated and Non-Class 1E cables are of a high quality commensurate with their importance to safety. For Non-class 1E circuit breakers, this requires

separation. The color coding scheme used to identify divisions of separation is given in Section 7.1.2.3, except black lettering, may be used on conduit and cable tags at terminations for all but black background; white lettering is used on black background tags.

8.3.1.4.6 Spacing of Power and Control Wiring and Components Comprising the Class 1E Electrical Systems in Control Boards, Panels, and Relay Racks

Redundant power and control wiring and components associated with Class 1E electrical systems in control boards, panels, and relay racks are separated by either a minimum of six inches of air space or ~~a metal~~ an approved barrier. See Section 7.1.2.2 for more detail of spacing of wiring and components in control boards, panels, and relay racks.

8.3.1.4.7 Fire Barriers and Separation Between Redundant Trays

The criteria for separation between redundant trays for various zones or areas of the plant is described in Section 8.3.1.4.2. For details of the fire protection system, see Section 9.5.1.

8.3.2 DC Power System

8.3.2.1 Description

8.3.2.1.1 Vital 125V dc Control Power System

The vital 125V dc control power system is a Class 1E system whose safety function is to provide control power for engineered safety features equipment, emergency lighting, vital inverters, and other safety-related dc powered equipment for the entire plant. The system capacity is sufficient to supply these loads during normal operation and to permit safe shutdown and isolation of the reactor for the "loss of all ac power" condition. The system is designed to perform its safety function subject to a single failure.

The 125V dc vital power system shall be composed of the four redundant channels (designated as channels I, II, III, and IV) and consists of four lead-acid-calcium batteries, six battery chargers (including two spare chargers), four distribution boards, battery racks, and the required cabling, instrumentation and protective features. Each channel is electrically and physically independent from the equipment of all other channels so that a single failure in one channel will not cause a failure in another channel. Each channel consists of a battery charger which supplies normal dc power, a battery for emergency dc power, and a battery board which facilitates load grouping and provides circuit protection. These four channels are used to provide emergency power to the 120V ac vital power system which furnishes control power to the reactor protection system. No automatic connections are used between the four redundant channels.

Battery boards I, II, III, and IV have a charger normally connected to them and also have manual access to a spare (backup) charger for use upon loss of the normal charger. Additionally, battery boards I, II, III, and IV have manual access to the fifth vital battery system. The fifth 125V dc Vital Battery System is intended to serve as a replacement for any one of the four 125V dc vital batteries during their testing, maintenance, and outages with no loss of system reliability under any mode of operation. See Figure 8.3-56.

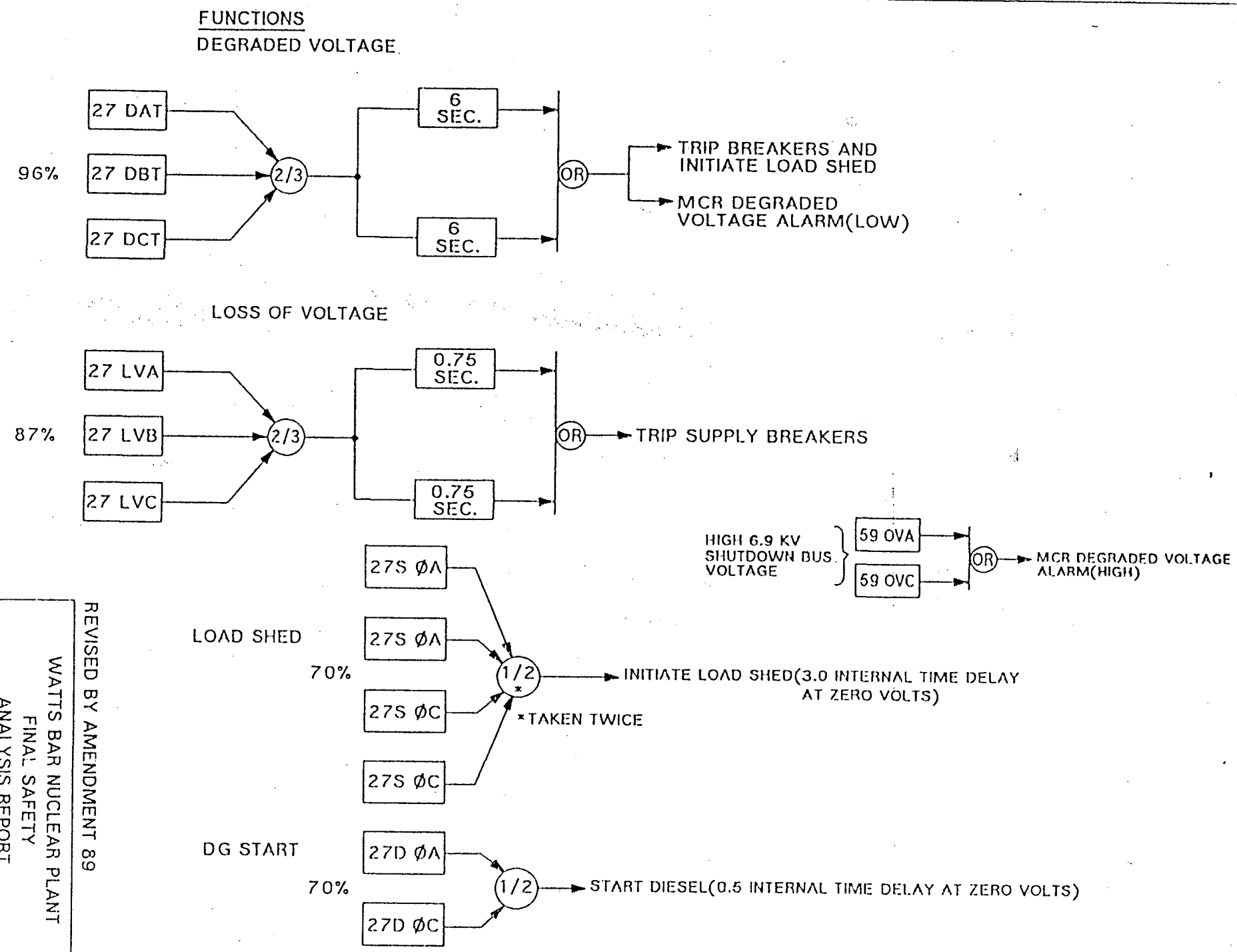

SCANNED DOCUMENT
THIS IS A SCANNED DOCUMENT MAINTAINED ON THE LENS OPTIMANAGE TEXT SCANNER DATABASE

REVISED BY AMENDMENT 89

WATTS BAR NUCLEAR PLANT
FINAL SAFETY
ANALYSIS REPORT

SECOND LEVEL VOLTAGE
PROTECTION
FIGURE 8.3-5a

9.2 WATER SYSTEMS

9.2.1 Essential Raw Cooling Water (ERCW)

9.2.1.1 Design Bases

The ERCW system is safety-related because it provides essential auxiliary support functions to the engineered safety features of the plant. The system is designed to supply cooling water to various heat loads in both the safety and non-safety portions of each unit. Provisions are made to ensure a continuous flow of cooling water to those systems and components necessary for plant safety either during normal operation or under accident conditions. Sufficient redundancy of piping and components is provided to ensure that cooling is maintained to vital loads at all times.

9.2.1.2 System Description

The ERCW system consists of eight ERCW pumps, four traveling water screens, four screen wash pumps, four strainers located in the main intake pumping station, and associated piping and valves as shown in Figures 9.2-1 through 9.2-4B. The logic and control diagrams are presented in Figures 9.2-5 through 9.2-14A. The design data for all pumps required for two-unit operation is shown in Table 9.2-1.

The eight ERCW pumps are mounted on the intake pumping station at Elevation 741.0 which is above the probable maximum flood level.

The ERCW system is designed to supply cooling water to the following components:

1. Component cooling heat exchangers
2. Containment spray heat exchangers
3. Emergency diesel generators
4. Emergency makeup for component cooling system
5. Control Building air conditioning system
6. Auxiliary Building ventilation coolers (for ESF equipment)
7. Containment ventilation system
8. Air compressors
9. Reactor coolant pump (RCP) motor coolers
10. Control rod drive ventilation coolers
11. Residual heat removal heat exchangers*
12. Spent fuel pool heat exchangers*

13. Reactor coolant pump thermal barrier*

14. Ice machine refrigeration condenser*

15. Instrument room chillers

16. Auxiliary feedwater**

17. Sample system (SS) heat exchangers*

The only loads on the system during normal operations are the component cooling heat exchangers, RCP motor coolers, control rod drive ventilation coolers, the air conditioning and ventilation systems (including the upper and lower containment coolers and the instrument room coolers water chiller units), and the air compressors, and the diesel generators (although not normally in service).

The intake pumping station is located approximately 800 feet from the reservoir at the end of the plant intake channel which provides direct communication with the main river channel for all reservoir levels including loss of downstream dam. The intake pumping station is so designed that all ERCW related equipment located therein will remain operable during the probable maximum flood.

Water for the ERCW system enters two separate sump areas of the pumping station through four traveling water screens, two for each sump. Four ERCW pumping units, all on the same plant train, take suction from one of the sumps, and four more on the opposite plant train take suction from the other sump. One set of pumps and associated equipment is designated Train A, and the other Train B. These trains are redundant and are normally maintained separate and independent of each other. Each set of four pumps discharges into a common manifold, from which two separate headers (1A and 2A for Train A, 1B and 2B for Train B), each with its own automatic backwashing strainer, supply water to the various system users.

Two paths are available for water discharge from the ERCW system. The normal path is to the cooling tower basins of the condenser circulating water system for use as makeup for evaporative losses. The alternate path is to the yard holding pond through yard ERCW standpipes and an ERCW overflow box. The alternate path is seismically qualified up to and including the ERCW overflow box.

*Provided with ERCW only during flood above Elevation 728.0.

**Supplied by the ERCW system only when normal supply from the condensate storage tank is not available to the auxiliary feedwater pump suction.

The alignment of ERCW headers and system users is as follows:

1. Containment spray heat exchangers 1A, 1B, 2A, and 2B are supplied from ERCW headers 1A, 1B, 2A and 2B, respectively.

2. The normal supply for both Train A diesel generators is from header 1A, although a backup source from header 2B is also provided. The normal supply for both Train B diesel generators is from header 1B with a backup supply from header 2A.

3. During Unit 1 only operation, the normal supply for component cooling heat exchangers A, B, and C is from ERCW header 2A, 2A, and 2B, respectively. However, interconnections between headers 1B and 2A, and between 1A and 2B have been incorporated to permit alternate supplies.

4. Each header provides essential raw cooling water to its corresponding Control Room and Control Building electrcal board room air-conditioning systems, the Auxiliary Building ventilation coolers for ESF equipment, the containment ventilation system, the RCP motor coolers, the control rod drive vent coolers, and the containment instrument room coolers water chillers (i.e., header 1A supplies Train A equipment in Unit 1, header 1B supplies Train B equipment in Unit 1, etc.).

5. Headers 1A and 1B provide a normal and backup source of cooling water for the station air compressors. For the auxiliary control air compressors there is one compressor on header 1A and one on header 2B.

6. Under flood conditions, the ERCW system will provide water to the spent fuel pool heat exchangers, reactor coolant pump thermal barrier, ice machine refrigeration condensers, and under certain conditions, residual heat removal heat exchangers and sample system heat exchangers (refer to Section 2.4.14) using spool piece inter-ties.

7. In the event of a need to supply ERCW to the auxiliary feedwater system, when the normal supply of water is not available from the condensate storage tank, discharge headers A and B automatically provide an emergency water supply to the motor-driven auxiliary feedwater pumps of the same train assignment as the header and to each unit's turbine driven auxiliary feedwater pump.

The supply headers are arranged and fitted with isolation valves such that a critical crack in either header can be isolated and will not jeopardize the safety functions of the system.

The operation of two pumps on the same plant train is sufficient to supply all cooling water requirements for the two-unit plant for unit cooldown, refueling or post-accident operation, and two pumps per plant train will operate during the hypothetical combined accident and loss of normal power if all four diesel generators are in operation. In an accident the safety injection signal automatically starts two pumps on each plant train, thus providing full redundancy.

All pump motors, traveling screen motors, screen wash pump motors, and backwashing strainer motors are supplied with power from normal and emergency sources, thereby ensuring a continuous flow of cooling water under all conditions. Since there are two independent power trains with two emergency diesel generators for each train, four of the eight ERCW pumps are assigned to train A and four to train B. Each diesel generator is aligned to ~~allow~~ supply power to either of two specific ERCW pumps; the generator capacity is such that only one pump per generator can be loaded automatically ~~operated at a specific time~~. Two traveling screens, two screen wash pumps, and two strainers are assigned to the power train corresponding to that of the ERCW pumps which this equipment serves. The motor-operated valves in the ERCW system are generally supplied with emergency power from the train of diesel generators which corresponds to the pump supplying the header in which the valve is located.

The component cooling system (CCS) heat exchanger discharge by-pass valves incorporate special trim to suppress cavitation. Flow is directed through the by-pass lines at low and intermediate heat exchanger flow rates by opening the by-pass line and closing the main 24-inch motor-operated butterfly valve at the heat exchanger outlet. For conditions which require flow rates beyond the capacity of the anti-cavitation valve, the 24-inch butterfly valve will be opened and the anti-cavitation valve closed. To minimize cavitation of the butterfly valves, a multi-holed orifice is located in each of the two CCS heat exchanger vertical discharge headers to increase the back pressure at the valves.

9.2.1.3 Safety Evaluation

The essential raw cooling water system is designed to prevent any postulated failure from curtailing normal plant operation or limiting the ability of the engineered safety features to perform their functions in the event of natural disasters or plant accidents. Sufficient pump capacity is provided for design cooling water flows under all conditions and the system is arranged in such a way that even a complete header loss can be isolated in a manner that does not jeopardize plant safety.

The essential raw cooling water system has eight pumps (four pumps per train). However, minimum combined safety requirements for one 'accident' unit and one 'non-accident' unit, or two 'non-accident' units, are met by only two pumps on the same plant train. Sufficient redundancy, separation and independence of piping and components are provided to ensure that cooling is maintained to vital loads at all times despite the occurrence of a random single failure. A single active failure will not remove more than one supply train per unit (i.e., either headers 1A and 2A or headers 1B and 2B will always remain in service). The ERCW system is sufficiently independent so that a single active failure of any one component in one train will not preclude safe plant operations in either unit. A failure modes and effects analysis is presented in Table 9.2-2.

The safety-related portion of the ERCW system is designed such that total loss of either train, or the loss of offsite power and an entire plant shutdown power train will not prevent safe shutdown of either unit under any credible condition.

The CDWE is isolated during Unit 1 only operation.

CCS heat exchanger C, which is shared between the two units, serves the train B engineered safety features for both units. During normal operation, this heat exchanger is aligned to supply component cooling water to the condensate demineralizer waste evaporate (CDWE). For this case, the ERCW flow path will be through anti-cavitation bypass valve, FCV-67-144. A safety injection actuation signal in either unit or loss of offsite power signal will cause valve FCV-67-152 to automatically open to assure ERCW flow from header 2B. Once the flow is established through valve FCV-67-152, the operator shall determine which valve to close manually.

The train A safeguards are capable of meeting the safety requirements independently of the train B safeguards equipment. The earliest that this action is required is specified in Table 6.3-3a.

During a LOCA, it may be necessary to reduce flow to the component cooling heat exchanger prior to admitting flow to the containment spray heat exchanger.

For purposes of maintenance to the cooling towers, a valve is provided in each of the normal discharge headers so that the ERCW flow can be terminated to the cooling towers and diverted to the holding pond via the alternate discharge path.

Cooling water is supplied ~~in an open~~ is normally cycle cooling mode to the various heat exchangers served by the essential raw cooling water pumps during all modes of plant operation. With normal offsite power sources available, water ~~can be~~ supplied to both units by operating ~~as many as~~ up to two ERCW pumps per train. The ERCW system provides the required flow necessary to dissipate the heat loads imposed under the design basis operating mode combination, i.e., one unit in LOCA and the other unit in hot standby, based on a maximum river temperature. Maximum ERCW supply temperature is 85°F and is consistent with the recommendations in Regulatory Guide 1.27. Minimum river temperature is 35°F.

More than 2 pumps may be operated during pump change over, etc.

The availability of water for the design basis condition on the ERCW system is based on one unit being in a LOCA and the other unit in hot standby and the following events occurring simultaneously:

1. Loss of offsite power.

2. Loss of downstream dam.

3. Loss of an emergency power train.

Since emergency power is used to supply power for the pumps and valves in case of loss of offsite power, the loss of an emergency power train automatically dictates that cooling water must be supplied with two ERCW pumps operating through train headers.

Design basis safe shutdown for WBN is the hot standby mode. If one unit is in an accident condition, the other unit should be maintained at hot standby (if it can not be maintained in its operating mode) until the accident unit cooldown is accomplished.

In order to preclude leakage of radioactivity from the containment, the supply lines to the upper containment coolers are provided with double isolation by use of a check valve and motor-operated valve. The supply lines to the lower containment cooler groups and the discharge lines are doubly protected by use of two motor-operated valves operated on separate power trains as shown in Figure 9.2-12.

Radiation detectors are installed in each ERCW discharge header at a point downstream of the last equipment discharge point. If an abnormal radiation level is detected in either ERCW discharge header, the radiation source is located and isolated.

9.2.1.4 Tests and Inspections

All system components are hydrostatically tested in accordance with the applicable industry code before station startup. The yard piping is hydrostatically tested in accordance with Section III of the ASME Code. Subsequent to closing out Section III activities, the yard piping was opened at a number of locations and a cement-mortar lining was applied as a

replacement under the provisions of Section XI of the ASME Code. Section XI defines a replacement as a design change to improve equipment service. Welds at pipe access points were examined visually and by magnetic particle test, and vacuum box leak tested before application of mortar to the weld area. After completion of cement-mortar lining, the piping was tested to the ASME Section III hydrostatic test requirements. The exposed welds were examined in accordance with the requirements of ASME Section III. ASME Section III examination pressure was maintained until the total time at pressure was one hour or greater. Following return of the system to service and before fuel load a visual examination (VT-2) will be performed in accordance with ASME Section XI IWA-5244 for buried components.

This alternative to visual examination during ASME Section III hydrostatic pressure testing was approved by NRC Inspection Report No. 50-390/89-04 and 50-391/89-04 for ERCW piping having inaccessible welds.

9.2.1.5 Instrument Applications

9.2.1.5.1 General Description

ERCW instrumentation and controls (see Figures 9.2-10 through 9.2-~~14~~ 14A) for equipment supplied for a particular ERCW main supply header are powered from the same electrical power source as the pumps which normally supply the water to that header. Therefore, loss of one power train would result in the loss of only the instrumentation and controls associated with that particular ERCW header. Motor-operated isolation valves are arranged and powered such that isolation may be accomplished utilizing either one of the available power trains. Backup controls (see Section 7.4) are provided for all devices which are required for operation in the event of a main control room evacuation.

9.2.1.5.2 Pressure Instrumentation

Pressure transmitters are provided on each ERCW pump discharge line and main supply header for displaying pressures locally and in the main control room, as well as actuating main control room annunciators when pressure drops below the setpoint. Each screenwash pump is provided with a local pressure gauge on the pump discharge line. Pressure differential indicating switches are connected across each traveling screen of the intake pumping station. These switches are provided to start the associated screen wash pump whenever a high differential is detected. An additional setting is provided so that if the differential continues to increase, an alarm is initiated in the main control room. Since this operation uses service air, a nonqualified system, the screenwash system is put in continuous operation within three hours after an earthquake, tornado, flood, loop, loss of upstream or downstream dam, or within 12 hours of a LOCA. Screen wash pump discharge pressure switches are utilized to start the traveling screen motor when screen wash pressure has been established. Local pressure gauges and differential switches are provided on each ERCW strainer to monitor strainer pressures and indicate status. Local pressure test points are provided on the ERCW inlet and outlet of the water chillers of each electric board room air conditioner and each Main Control Room air conditioner.

9.2.1.5.3 Flow Instrumentation

Flow elements and transmitters are provided for each ERCW main supply header to display the flow rates. The ERCW flow rate through each containment spray and component cooling heat exchanger is also displayed in the main control room. Local flow indicators are provided for the flow rate through the emergency diesel engine heat exchangers, the flow rate inlet and discharge from each lower containment, RC pump motor, and control rod drive ventilation cooler group, and each upper containment ventilation cooler. Flow elements are provided in the discharge lines of most other coolers and heat exchangers for use during testing and system balancing.

9.2.1.5.4 Temperature Instrumentation

ERCW pump motor winding and bearing temperatures are recorded on a temperature recorder in the main control room. Local temperature indicators are provided for the discharge from each emergency diesel engine heat exchanger and all air conditioner condensing units. Temperature test wells are provided on the inlet of each air conditioner condensing unit and the discharge side of each component cooling system heat exchanger, containment spray heat exchanger, RC pump motor cooler, and control rod drive cooler. Temperature test wells are also provided in the inlet and discharge lines for most space coolers, room coolers, and in the main supply and return header.

9.2.1.5.5 Deleted by Amendment 87

9.2.1.5.6 Control Valves

The open and closed positions of all ERCW air operated and motor-operated valves are displayed in the main control room by means of lights incorporated either on the controlling hand switch or on a valve status light subpanel. All air operated temperature and flow control valves are designed to fail open on loss of electrical power and/or operating air, thereby providing maximum ERCW cooling flow to the equipment being supplied.

ERCW is supplied to each upper and lower containment and control rod drive ventilation cooler through a throttling action type valve controlled by a temperature indicating controller. Manual and/or automatic override to fully close the control valve is provided by means of a hand switch and/or logic signal (Figures 9.2-5 through 9.2-9).

ERCW is supplied to each air conditioner condensing unit through an automatic water regulating valve controlled by condenser pressure.

Each CCS heat exchanger incorporates a motor-operated butterfly valve in its MAIN ERCW discharge line. Each valve may be placed in either of two intermediate, throttled positions in addition to the full open or closed positions. The desired position is selected manually from the control room for the particular plant operating condition. In addition, the heat exchanger C valve has automatic controls to open the valve to the low-flow intermediate position in response to a loss of offsite power signal or a safety injection signal in either unit. Such automatic controls are not required for heat exchangers A or B since their bypass valves are normally open, whereas the heat exchanger C valve may be normally closed.

The by-pass lines at the CCS heat exchangers discharges have a special motor-operated, anti-cavitation modulating valve to control ERCW flow rate through the associated CCS heat exchanger at low and intermediate flow rates. These anti-cavitation valves may be manually adjusted to the open, closed, and/or intermediate position to achieve desired CCS heat exchanger performance for various operating modes. Control switches are provided in the main control room. The valves are designed to ASME Section III, Class 3, with Class 1E motor operators.

ERCW is supplied to each additional cooler or heat exchanger through an on-off action type valve controlled by either a hand switch, a temperature switch, a manual valve, a logic signal, or various combinations of these.

9.2.1.6 Corrosion, Organic Fouling, and Environmental Qualification

Watts Bar Nuclear Plant (WBN) has a comprehensive chemical treatment program for treating raw water systems. This treatment is a major part of WBN Raw Water Corrosion Program. The chemical treatment is used to control corrosion in carbon steel and yellow metals, to control organic fouling, including slime, to minimize the effect of microbiologically induced corrosion (MIC) and inhibit growth of Asiatic clams. Chemical treatment for the ERCW ~~shall use~~ may include the following:

Chemical treatment

a. ~~A Copolymer dispersant,~~ to control deposition and fouling
b. ~~Tetrapotassium Pyrophosphate~~ ~~A~~ corrosion inhibitor and sequestrant, to remove~~s~~ existing deposits
c. ~~Zinc Sulfate~~ control~~s~~ carbon steel corrosion
d. ~~Butyl Benzotriazole~~ protect~~s~~ yellow metal
e. ~~DCH quat~~ kills clams, zebra mussels and prevent~~s~~ MIC
f. ~~BCDMH~~ ~~A~~ biocide to reduce MIC and control clams

Chemical treatment to

The dead legs to the containment spray system (CSS) heat exchangers (Hxs) and auxiliary feedwater (AFW) Pumps shall have biocide/chemical treatment lines which permit flow through those lines on a continuous basis. In addition, the CSS Hxs and piping between the motor-operated supply and discharge isolation valves shall be filled with demineralized water treated with Ammonium Hydroxide and Hydrazine.

The ERCW piping to the diesel generators is treated by modulating the ERCW flow through the diesel generator Hxs during periods of biocide (DGA quat and BCDMH) injection. During Unit 1 only operation, flow is provided to the diesel generators continuously.

For the ERCW line to the component cooling system (CCS) surge tank, the blind flange at the spool piece connection ~~will be removed and the piping flushed quarterly during DCH quat injection. An option for treating these lines would be to flush through the drain valve in the lines which are connected to the CCS surge tanks during flood mode operation to remove sediment which could collect in the risers to the main supply headers.~~ Other lines used to connect to CCS piping during flood mode operation would be treated in a similar manner. These lines are not connected to the CCS during the flushing operation.

Control of organic fouling and Asiatic clams is further enhanced by the use of strainers in the supply headers. Each supply header is provided with a

is provided with a flushing connection to faciliate chemical treatment of the piping.

strainer (auto-backwash type) capable of removing particles and organic matter larger than 1/32-inch diameter. The strainers are located in the Intake Pumping Station downstream of the ERCW pumps.

Normal system operation and maintenance is considered adequate to disperse chemicals in the instrument lines, drains, and vents in the ERCW system.

Allowances for the effects of corrosion on the structural integrity of this system were made by increasing the wall thickness of the pump pressure boundary, pipe, heat exchanger shells and tubes, and other system pressure retaining components. Measures have also been taken to compensate for the effects of corrosion on the flow passing capability of the system. The normally wetted portion of the buried supply and discharge headers have been lined in situ with cement mortar, the 2-inch and smaller diameter piping is stainless steel, and selected runs of larger piping in the Auxiliary and Turbine Buildings are stainless steel, and almost all of the piping in the Reactor Building is stainless steel.

most of

To the extent to which they are exposed to atmospheric conditions, all pumps and valves will be designed to operate under the most extreme climatic conditions that are expected to prevail in the southeastern United States.

9.2.1.7 Design Codes

The ERCW system components are designed to the codes listed in Table 3.2-2a.

(iii) In order to maintain containment integrity during and after a LOCA, CCS piping between and including the containment isolation valves is design for 250°F.

During normal full power operation, with all CCS equipment available, pumps 1A-A and 1B-B and Heat Exchanger A are aligned with Unit 1, Train 1A ESF and miscellaneous equipment; pumps 2A-A and 2B-B and Heat Exchanger B are aligned with Unit 2 Train 2A ESF and miscellaneous equipment. Pump C-S and Heat Exchanger C are aligned with either Unit 1, Train 1B or Unit 2, Train 2B equipment. Pump 1B-B is used as additional capacity for Train 1A, as required, and as a replacement for pumps 1A-A or C-S, if one should be out of service. Pump 2B-B is used as additional capacity for Train 2A as required and as a replacement for pumps 2A-A or C-S, if one should be out of service. For Unit 1 only operation, pump 2B-B will be aligned in parallel with pump C-S to supply Train 1B/2B, Heat Exchanger C.

Train 1A and Train 2A equipment will provide all the cooling water necessary for the safe operation of Units 1 and 2, respectively. Train 1B/2B (common) supplies additional cooling capacity to the unit it is aligned with during various operational modes. Train 1B/2B equipment has been sized to maintain plant safety in the event of Units 1 and 2, Train A power loss.

A surge tank is provided for each unit. Each surge tank is separated into two parts by a baffle, providing separate minimum surge volumes for each ESF cooling train.

Both units are served by two cooling system trains (A and B) serving ESF equipment, with train A also serving miscellaneous non-safety related components and train B serving the non-safety related condensate demineralizer waste evaporator, (not in service during Unit 1 only operation). Except for the RHR Hxs, excess letdown Hx, and PAS coolers, both trains of the safeguards equipment of both units served by the CCS are normally aligned and supplied with CCS water and will automatically continue to be supplied in a LOCA. During Unit 1 only operation, RHR Heat Exchanger 1B-B will normally be aligned to receive component cooling water during all operating modes. In the event of an accident, nonsafety-related components are not required; therefore, CCS flow to these components may be manually isolated. The excess letdown heat exchanger is required only during startup and when normal letdown is lost, and is manually valved in at that time. The PAS system coolers are also manually aligned while performing sampling operations following an accident; at other times the associated CCS valves are locked closed. Prior to switchover from injection to recirculation phase of safety injection it is necessary for the operator to open the CCS valves at the RHR heat exchangers of the accident unit in order to supply these heat exchangers with cooling water. This action is part of the switchover sequence specified in Section 6.3.2.2 and Table 6.3-3. The earliest time at which this operator action is required to be performed is 10 minutes. If an emergency power train is lost during an accident condition no additional operator action on the CCS is required for plant safety except for the following cases:

1. If the non-accident unit is utilizing RHR cooling it will be necessary to close ~~or throttle~~ the CCS supply to these heat exchangers. RHR cooling will be terminated when the non-accident unit is in RHR cooldown with the reactor coolant system not vented. If the reactor coolant system has

been vented, RHR cooling of the non-accident unit will continue, but at a reduced rate.

2. During two unit operation, If train A power is lost, the operator will terminate CCS flow to the condensate demineralizer waste evaporator (not in service during Unit 1 only operation). CCS pump 1B-B will supply cooling water to SFPCS heat exchanger A via CCS header 1A and CCS heat exchanger A during two unit operation. During Unit 1 only operation, flow to the spent fuel pool cooling system heat exchanger will be provided after CCS pump 1B-B has been realigned to CCS train 1B/2B.

3. During one and two unit operation, if Train B electrical power is lost, Pump C-S will be manually realigned to Train A power and valved into the Unit 1 Train A header to provide SFPC heat exchanger cooling. The spent fuel pool cooling system heat exchanger shall be isolated until this realignment occurs.

In the event of a design basis flood at WBN, the CCS pumps will be submerged since the maximum flood level will be above the CCS pumps. Since cooling must be maintained to certain CCS users during the flood, provisions have been made to interconnect the ERCW and CCS systems to supply ERCW to the following loads:

a. SFP heat exchangers,
b. RHR heat exchangers,
c. RCP thermal barriers,
d. Sample heat exchangers.

The interconnections are accomplished by installing spool pieces and opening normally-closed valves during flood mode preparation. The thermal barrier booster pumps are required to operate during flood mode and remain above the maximum flood. Some normally-open CCS valves will be closed during this phase to isolate nonessential equipment. The surge tanks shall be isolated upon ERCW interconnection to prevent potential overpressurization.

Provisions have been provided to reestablish CCS flow to the reactor coolant pump thermal barrier following a Phase B isolation signal. This action will protect the integrity of the seals in the event of passive failure of the chemical and volume control system seal injection flow to the reactor coolant pump seals.

Component cooling water is circulated through the shell side of the CCS heat exchangers to the components using the cooling water and then back to the CCS pump suction. The surge tank for each unit is separated into two sections by a baffle. Each section is tied into the pump suction lines from safeguard trains. This tank accommodates expansion and contraction of the system water due to temperature changes or leakage, and provides a continuous water supply until a small leak from the system can be isolated. Because the surge tank is normally vented to the building atmosphere, a radiation monitor is provided in each component cooling water heat exchanger discharge line. These monitors actuate an alarm and close both surge tank vent valves when the radiation reaches a preset level above the normal background.

Cooling water is available to all components served by the system. The system is provided with adequate motor-operated valves to permit realignment or isolation of equipment and cooling water headers by the control room operator. (Motor-operated valves are opened as necessary, to provide the RHR heat exchangers with cooling water during startup, cooldown, refueling, and LOCA.)

Normal system makeup is provided from the demineralized water system. Emergency makeup is provided from the ERCW system.

TABLE 9.2-1

ESSENTIAL RAW COOLING WATER SYSTEM
PUMP DESIGN DATA

Essential Raw Cooling Water Pumps	
Quantity	8
Type	Vertical, wet pit centrifugal type
Rated capacity, gpm (each)	11,800
Rated head, ft	210 (See Note 1)
Motor horsepower, hp (each)	800
Submergence required, ft	5.75
Submergence available (minimum), ft	12.07
Screen Wash Pumps	
Quantity	4
Type	Vertical turbine
Rated capacity, gpm (each)	270
Rated head, ft	350
Motor horsepower, hp (each)	40
NPSH required, ft	9.0
NPSH available (minimum), ft	42.35
Traveling Water Screens	
Quantity	4
Motor Horsepower, hp (each)	3

Note:

1. During the performance of the preoperational testing program, ERCW pump performance did not match the original performance curves supplied by the vendor. Reanalysis of the ERCW flow requirements determined that the ERCW pumps could perform at 72% of the original vendor supplied performance curve and still meet the ERCW system design requirements for Unit 1 operation. Therefore, the performance of the ERCW pumps has been determined to be acceptable for Unit 1 only operation.

Each sample is listed in Table 9.3-2 giving the sampled system, sample location, system design temperature and pressure, sample type (local, titration room, hot sample room, gas analyzer, or boron concentration monitor). Sampling lines from systems covered by TVA Classes A, B, C and D from root valve through first valve in sampling lines, or through second containment isolation valve if sample lines are extensions of containment, are the same class or higher as the sampled systems. Also, sample lines which form a primary pressure boundary for the boron concentration monitor are TVA Class B. Each of these sample lines which interface with TVA Class A piping has a 3/8 inch O.D. The sample line itself serves as a flow restrictor. Sample lines in Seismic Category I structures are a minimum of TVA Class G.

Remaining sample lines are TVA Class H, except the boric acid and waste evaporator sample cylinder stations, which are TVA Class C. The sample piping and equipment, where applicable, meets the following codes and standards:

1. NEMA SG-5 and IC-1.
2. ASME Boiler and Pressure Vessel Code, Section III (applicable sections) and Section IX (applicable sections).
3. ANSI B31.1, ~~B31.7,~~ and B16.5.
4. IEEE.
5. ASTM.
6. SAMA PUB19 and PMC20-2-1970.
7. ~~National Electric Code (NFPA 70 ANSI C1).~~

The hot sample room cubicles are able to withstand a 1.0 g horizontal acceleration to ensure their stability during a seismic event. Also, the hot sample room cubicle entry block valves meet ASME Section III, Paragraph NC-3676, Code Class 2 with applicable 'N' stamp.

The routine sampling subsystem provides the capability for sampling the reactor coolant hotleg and steam generator blowdown, in an emergency sample area during a maximum flood condition. Portable sample analyzer equipment is used to measure the boron concentration in the reactor coolant system (RCS).

9.3.2.3 Safety Evaluation

Sample lines have the required indicators, pressure throttling valves, heat exchangers, etc., to ensure plant operator safety when collecting samples.

The hot sample room has the following special safety features (due to handling primary loop samples):

1. Samples lines from the RCS hot legs contain a delay coil to provide a 40-second sample transient time within containment, plus a 20-second transient time from containment to the hot sample cubicles to provide decay time for N-16.

2. Cubicles 1A and 2A are expected to contain the most highly radioactive samples. Sample lines to these sinks are equipped with stainless steel sample cylinders. Cubicles 1A and 2A have a 2-inch lead shield behind the front plate of the cubicles. Four (total) 2-inch lead shielded sample cylinders designed to decrease body dosage to the plant operator are available for use during conditions approximating 1% failed fuel.

The RCDT has both "Hi" and "Hi-Hi" level alarms to indicate an out of tolerance condition. The "Hi" level alarm also starts the RCDT pumps. Completely manual operation will be used to transfer water to the auxiliary makeup tank (AMT). Levels in the AMT can be visually checked (a level indicator is provided) since the tank has a 1/2-day supply under worst case conditions. The redundant pressure loops in the reactor coolant system serve as indications of the low pressure necessary for the activation of the auxiliary charging pumps.

9.3.7 Boron Recycle System

The boron recycle system (BRS) receives and recycles reactor coolant effluent for reuse of the boric acid and makeup water. The system decontaminates the effluent by means of demineralization and gas stripping, and uses evaporation to separate and recover the boric acid and makeup water. The boric acid evaporator package is not required for the operation of Unit 1. Waste reactor coolant effluent will be processed through the waste disposal mobile demineralizer. (Refer to Section 11.2.3)

9.3.7.1 Design Bases

9.3.7.1.1 Collection Requirements

The BRS collects and processes effluent which can be readily reused as makeup to the reactor coolant system (RCS). For the most part, this effluent is the deaerated, tritiated, borated, and radioactive water from the letdown and drains.

The BRS is designed to collect, via the letdown line in the chemical and volume control system (CVCS), the excess reactor coolant that results from the following plant operations during one core cycle:

1. Dilution for core burnup from approximately 1100 ppm boron at the beginning of an annual core cycle to approximately 10 ppm near the end of the core cycle.

2. Hot shutdowns and startups. Four hot shutdowns are assumed to take place during an annual core cycle.

3. Cold shutdowns and startups. Three cold shutdowns are assumed to take place during an annual core cycle.

4. Refueling shutdown and startup.

The BRS also collects and processes water from the following sources:

1. Reactor coolant drain tank (waste disposal system) This tank collects leakoff type drains from equipment inside the containment. The contents of this tank are sent to the holdup tanks.

2. Pressure relief valves - The holdup tanks collect the discharge from the volume control tank.

3. Accumulators (safety injection system) - The holdup tanks collect effluent resulting from leak testing of accumulator check valves.

The Control Building emergency air cleanup system is located within the mechanical equipment room at elevation 755. This system is provided with two 100% capacity emergency air cleanup fans, and two 100% capacity air cleanup filter assemblies arranged in two parallel 100% capacity fan-filter trains. Refer to Section 6.5 for further information related to the emergency air cleanup units.

The emergency air cleanup system automatically operates upon an accident signal or upon indication of high radiation or smoke concentrations in the building fresh air supply. This system can also be manually started from the MCR at any time. During an accident, both of the emergency air cleanup supply fans are started. Controls are provided to permit the control room operators to shut down either one of the air cleanup units and to keep it as a backup. The backup unit automatically starts in the event the operating unit fails.

During air cleanup system operation, a portion of the MCR air conditioning system return air is continuously routed through one or both of the air cleanup units and then to the system return air plenum. The cleaned air is thus recirculated to the MCR by the air-conditioning system. The system may be manually operated from the MCR at any time as required for periodic testing in accordance with the technical specifications filter testing program.

The Control Building emergency air cleanup fans are ESF equipment and are connected to separate divisions of the emergency power system.

The MCRHZ is pressurized with cleaned outdoor air during operation of the control room emergency air cleanup system. The minimum positive 1/8-inch positive pressure of the MCRHS area relative to the outdoors and adjoining spaces minimizes the inleakage of unprocessed air during the emergency mode. Section 6.4.3 discusses the three modes of system operation. The control room emergency pressurization system is provided with two 100% capacity emergency pressurizing air supply fans located within the mechanical equipment room elevation 755. The fresh or pressurizing air is taken from either of two air intakes, one from the Control Building roof at Elevation 775 near the east end of the building and the other from the fresh air intake at the west end of the building. Each fan is duct-connected to an intake hood to provide two separate 100% capacity air supply systems. Air from each emergency intake is ducted to the associated emergency pressurizing fan. A cross-connection is provided just upstream of the fans (refer to Figure 9.4-1) which allows either emergency pressurization fan to draw air from either emergency air intake if necessary. The manual damper in the cross connection is normally in the locked closed position. The damper, which is accessible from within the habitability area, is opened only if one of the emergency pressurizing fans has failed and contamination of the air intake associated with the non-failed fan is great enough to require air to be drawn from the other emergency intake. Determination of contamination level is discussed in Section 6.4.3.

Emergency pressurization air supply discharges to the control room air-conditioning system return air upstream of the air cleanup filter assembly trains. The emergency pressurizing fans are the vaneaxial type with a capacity to deliver ~~325~~ 711 cfm. These fans (one redundant) are ESF equipment and are connected to separate divisions of the emergency power system.

Both emergency pressurizing fans are started by the same accident signal that starts the air cleanup units. The capability is provided to place either of

9.4.6 Reactor Building Purge Ventilating System

9.4.6.1 Design Bases

The reactor building purge ventilating system is designed to maintain the environment in the primary and secondary containment within acceptable limits for equipment operation and for personnel access during inspection, testing, maintenance, and refueling operations; and to provide a filtration path for any outleakage from the primary containment to limit the release of radioactivity to the environment.

The purge function of the reactor building purge ventilating system is not a safety-related function. However, the filtration units ~~and associated exhaust ductwork~~ are required to provide a safety-related filtration path following a fuel-handling accident.

The design bases include provisions to:

1. Supply fresh air for breathing and contamination control when the primary containment or annulus is occupied.

2. Exhaust primary containment and annulus air to the outdoors whenever the purge air supply system is operated.

3. Clean up containment exhaust during normal operation by routing the air through HEPA-carbon filter trains before release to the atmosphere to keep releases well below 10 CFR 20 limits and to comply with 10 CFR 50 Appendix I.

4. Provide a reduced quantity of ventilating air to permit occupancy of the instrument room during reactor operation. The provisions for 1, 2, and 3 above will apply.

5. Assure closure of primary and secondary containment isolation valves following accidents which result in the initiation of a containment ventilation isolation signal.

6. Assure closure of the system air intake dampers, which form part of the ABSCE (see Section 6.2.3.2.1), upon receipt of a signal for Auxiliary Building isolation.

   Items 5 and 6 above are safety-related functions.

The primary containment penetrations for the ventilation supply and exhaust subsystems are designed to primary containment structural standards. These are discussed in detail in Section 6.2.4.

The containment purge system is sized to maintain an acceptable working environment within the containment during all normal operations. The system has the capabilities to provide a filtration path for outleakage from the primary containment, and clean up containment atmosphere following a design basis accident.

The single air supply duct serving the two purge air supply fans and the instrument room supply fan is provided with two isolation dampers. These dampers are air operated, normally closed, failed closed dampers which close automatically on receipt of auxiliary building isolation or high radiation in refueling area signals. These dampers establish the boundary for the auxiliary building secondary containment enclosure. See Section 6.2.3.

Since the annulus is maintained at a 5-inch water gauge negative pressure by the annulus vacuum control system, the annulus portion of the purge system ducts is maintained at the negative pressure by four 1/2-inch leakoffs. This arrangement is designed to prevent containment contamination leakage from escaping through the purge system ducts into the Auxiliary Building.

The purge function of the reactor building purge ventilation system is not a safety-related function. However, the filtration units ~~and associated exhaust system ductwork~~ are required to provide a safety-related filtration path following a fuel-handling accident. The primary containment isolation valves and intermediate piping of the RBPVS are designed in accordance with ANS safety class 2A; other portions are designated ANS safety class 2B except the purge fans, all purge ductwork within the containment, purge supply air ductwork from the ABSCE boundary, fire protection, and drain piping. The instrument room purge subsystem is not an engineered safety feature, and credit for a LOCA or a fuel-handling accident is not claimed.

Containment ventilation isolation signals automatically shut down the fan systems and isolate the purge systems by closing their respective dampers and butterfly valves. Each primary containment purge system isolation butterfly valve is designed for fail safe closing within 4 seconds of receipt of a closure signal for penetrations X-4, X-5, X-6, X-7, X-9A, X-9B, X-10A, X-10B, X-11, and X-80. The purge containment isolation valve locations and descriptions are given in Table 6.2.4-1. Each valve is provided with an air cylinder valve operator, control air solenoid valve, and valve position indicating limit switches.

Smoke detectors, located in the Auxiliary Building air intake and the general ventilation supply ducts, shut down the purge air supply and the incore instrument room purge supply fans and their isolation dampers.

9.4.6.3 Safety Evaluation

Functional analyses and failure modes and effects analysis have shown that the reactor building purge ventilating system meets the containment isolation requirements. The filtration units and associated exhaust ductwork provide a safety-related filtration path following a fuel-handling accident.

A functional analysis of the system shows that:

1. During normal operation, adequate fresh air is provided for breathing and for contamination control when the primary or secondary containment (annulus) is occupied.

2. Primary and secondary containment exhaust air is cleaned up during normal operations and following a fuel handling accident.

cooling assemblies, instrument room fan-coil units, water cooled condenser portions of the instrument room water chillers, ductwork and duct supports, and chilled water piping and pipe supports are designed and installed to Seismic Category I(L) requirements, and the lower compartment cooling units (excluding cooling coils), fans, ductwork, and duct supports are designed to Seismic Category I requirements.

9.4.7.4 Test and Inspection Requirements

Air-cooling assemblies and their temperature-controlling devices which are located within the containment are tested prior to reactor operation and are generally accessible for inspection only during unit shutdown. The system is tested initially as part of the preoperational test program. After maintenance or modification activities that affect a system function, testing is done to reverify the system or component operations. Instrument room fan-coil units, control devices, and containment-isolation chilled-water valves are accessible for periodic inspection. Water-chilling equipment, pumps, and all essential electrical starting and switchover controls located in the Auxiliary Building are available for periodic inspection.

Instrument room chilled-water containment-isolation valve testing and inspection requirements are discussed in Section 6.2.4.

9.4.8 Condensate Demineralizer Waste Evaporator Building Environmental Control System (Not required for Unit 1 operation)

9.4.8.1 Design Basis

The condensate demineralizer waste evaporator building (CDWEB) environmental control system (ECS) is designed to supply an acceptable ventilation airflow to the CDWEB continuously. Separate air conditioning systems provide the capability for heat removal as necessary. This ECS is designed to maintain building temperatures below 105°F when the outside temperature is 95°F.

The ventilation supply and exhaust systems maintain the building at a slight negative pressure.

Heat is supplied by electric space heaters where required. These heaters are designed to maintain the building at 50°F or higher. Heating requirements are based on an outside temperature of 15°F.

Supply and exhaust ductwork is designed in accordance with SMACNA Low Pressure Duct Standard.

Airflow is from areas of lower radioactivity potential to areas of greater radioactivity potential. All exhaust air is monitored for excessive radioactivity levels.

Fire dampers are used to prevent the spread of fire between the CDWEB and the Waste Package Area of the Auxiliary Building.

9.4.8.2 System Description

The CDWEB ECS is shown on figures 9.4-16 and 9.4-8.

TABLE 9.4-4

(Sheet 13 of 13)

FAILURE MODES AND EFFECTS ANALYSIS
DIESEL GENERATOR VENTILATION SYSTEM

#	COMPONENT IDENTIFICATION	FUNCTION	FAILURE MODE	POTENTIAL CAUSE	METHOD OF FAILURE DETECTION	EFFECT ON SYSTEM	EFFECT ON PLANT	REMARKS
19	Nonsafety heaters 0-HTR-30-479 0-HTR-30-480 0-HTR-30-481 0-HTR-30-482 for the Pipe Gallery	Provide heating during winter normal operation	Off during winter operation	Electrical	Surveillance & Maintenance	Decrease in Pipe Gallery Room temp below environmental design conditions	None (See Remarks)	~~Operator will take appropriate action to restore heating.~~ Minimum temperature in Pipe Gallery is calculated to be 36.3°F.
20	Toilet Room exhaust fan 0-FAN-469	Provide cooling and ventilation for the toilet and corridor	Fails to start; stops	Electrical Mechanical	Surveillance & Maintenance	Loss of adequate ventilation for maintenance of design temp	None	~~Operator will take appropriate action to restore ventilation.~~

Note:

1. Refer to TVA Calculation No. ~~EPM, RKK-12129~~; "Additional Diesel Generator Building Hydrogen Concentration and Dilution Ventilation."

EPM-RKK-121290

Maximum temperature in Corridor is calculated to be 120°F.

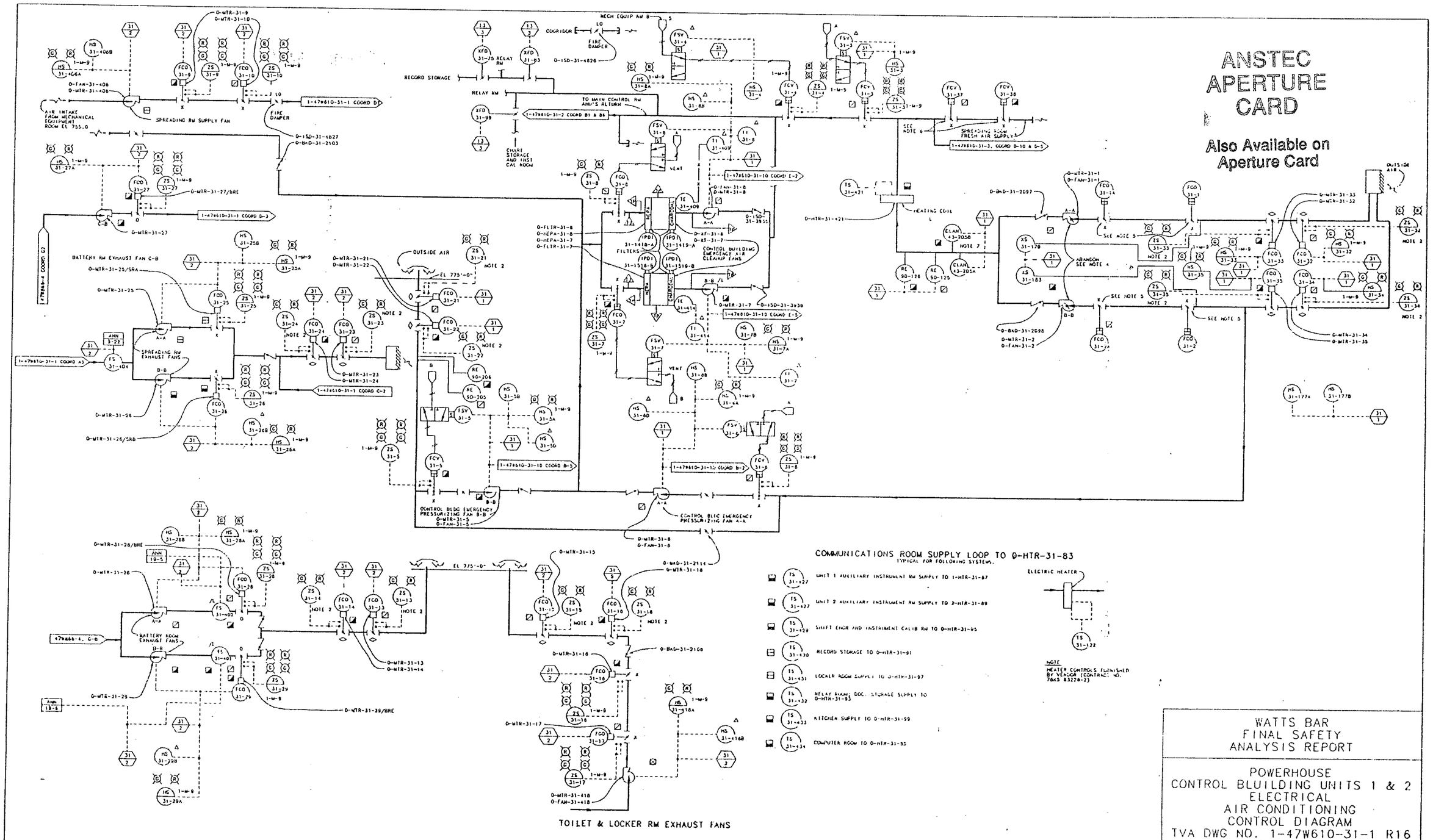

WATTS BAR
FINAL SAFETY
ANALYSIS REPORT

POWERHOUSE
CONTROL BLUILDING UNITS 1 & 2
ELECTRICAL
AIR CONDITIONING
CONTROL DIAGRAM
TVA DWG NO. 1-47W610-31-1 R16
FIGURE 9.4-4

PROCADAM MAINTAINED DRAWING
THIS CONFIGURATION CONTROL DRAWING IS MAINTAINED BY TVA
NON-CAD UNIT AND IS NOT PART OF THE TVA PROCADAM DATABASE

9508240141-01

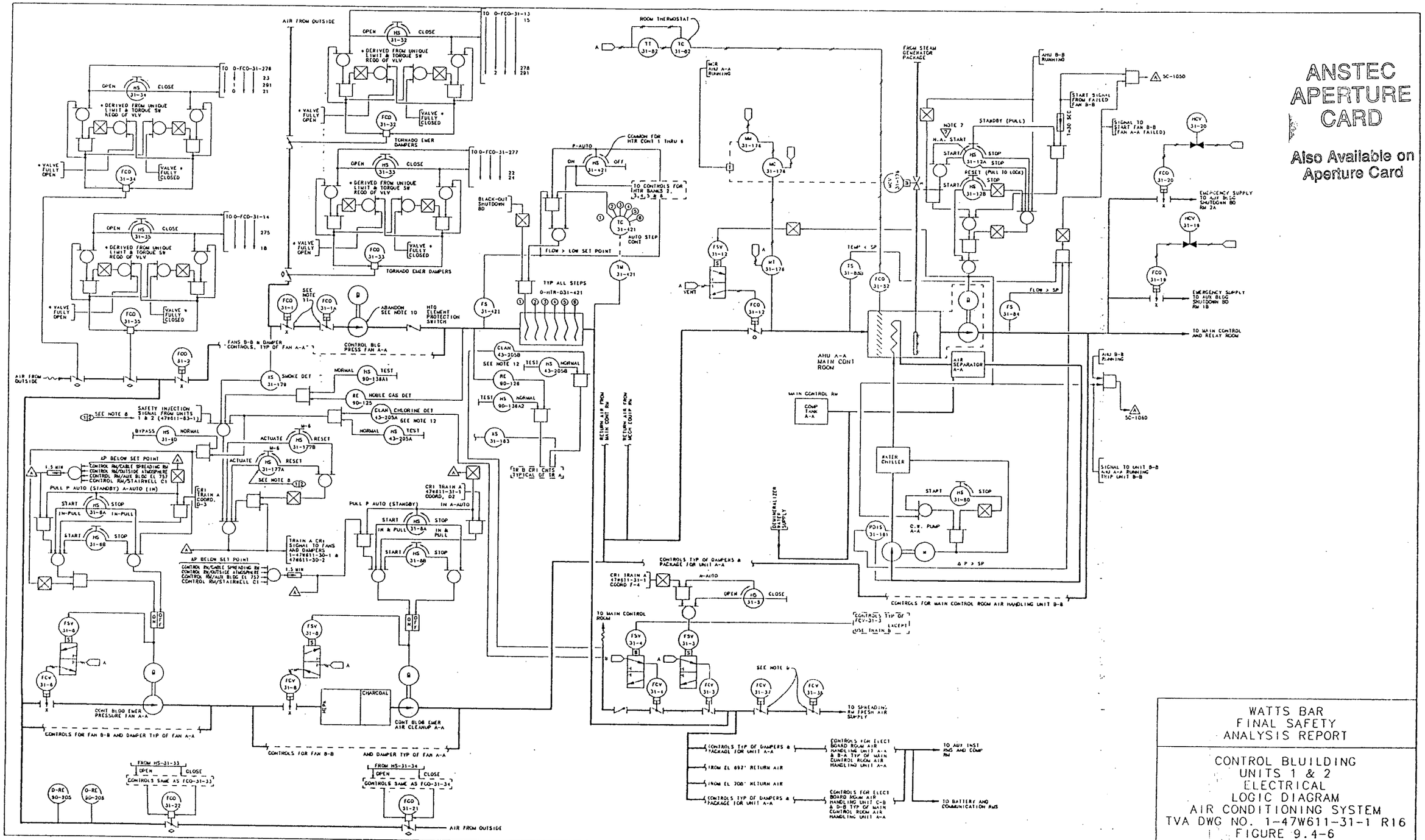

ANSTEC APERTURE CARD

Also Available on Aperture Card

WATTS BAR
FINAL SAFETY
ANALYSIS REPORT

CONTROL BLUILDING
UNITS 1 & 2
ELECTRICAL
LOGIC DIAGRAM
AIR CONDITIONING SYSTEM
TVA DWG NO. 1-47W611-31-1 R16
FIGURE 9.4-6

PROCADAM MAINTAINED DRAWING
THIS CONFIGURATION CONTROL DRAWING IS MAINTAINED BY THE MM CAD UNIT AND IS NOW PART OF THE TVA PROCADAM DATABASE

9508240141-02

rooms, and auxiliary instrument rooms. Sound-powered equipment and circuits are provided in the Diesel Generator Buildings, the 480V ac shutdown board rooms, the 6.9 kV ac shutdown board rooms, and the auxiliary control room.

Health Physics System - The primary purpose of this sound powered telephone system is to provide an alternate communications link between the health physics office and the MCR. A direct dedicated circuit is provided between the health physics office and the Units 1-2 control rooms (physically on the electrical control area desk).

Diesel Building to Main Control Room - The primary purpose of this sound powered telephone system is to provide an alternate communications link between the Diesel Generator Building and main control room. A direct dedicated circuit is provided between the shielded waiting room in the Diesel Generator Building and the MCR at the diesel generator control panel.

Closed-Circuit Television

Radwaste - Two cameras are provided for remotely viewing radwaste packaging operations. One camera is mounted on a trolley atop the shield wall and the other is mounted on the overhead crane. Two monitors and the necessary camera control equipment are located in a control console behind the shield wall.

Reactor Containment and Control Room - Two portable cameras are provided for remotely viewing refueling operations. Permanent wiring for the cameras is terminated in plug receptacles on the refueling floor and lower compartment of each unit and at the common spent fuel pit area. A monitor and video switcher are provided in the electrical control room. This system is to be used primarily by operations but is also useful in providing training information.

Codes, Alarms, and Paging System

The codes, alarms, and paging (CAP) system is one system that combines evacuation alarm, fire and medical emergency alarm, all clear, and paging. Control logic, tone generation, and power and signal distribution equipment is located in the communications room with solid-state amplifier speakers as end devices located throughout the plant. The code call equipment has been disabled.

Site assembly and all clear alarms are controlled from the MCR and auxiliary control room. The fire and medical emergency alarm can be initiated from any TSS telephone and answered by the unit operators.

Paging may be accessed from any TSS telephone. Paging may also be accessed by paging handsets provided on ~~both~~ unit control room desk~~s, the electrical control room desk, the shift engineer's desk,~~ and in the auxiliary control room.

The CAP system operational priority sequence is fixed by relay logic as follows:

1. Site Assembly alarm
2. All Clear Assembly
3. Fire and medical emergency alarm
4. Paging

3. Plug-in features:

   a. The tone generators are solid-state plug-in devices and spares will be readily available.

   b. The amplifier in the speaker unit is solid-state, easily unplugged and replaced. Spares will be stocked.

4. The power-leads to each speaker-amplifier are fused and annunciated.

5. The signal-leads to each speaker-amplifier are supervised with dc while idle. Any occurrence which causes a short of the signal-leads will cause the fuse to blow and annunciate. The rest of the units will function normally with single or multiple open-circuited signal-leads to individual speaker-amplifiers.

6. There are two sources of 24V dc power distributed to the speaker-amplifiers and approximately half in each area of the plant are supplied from each source. Each source is quite reliable since it is supplied from chargers which are backed up by batteries capable of supplying the load for three hours.

The failure of the TSS equipment will not impair the use of the paging equipment from the local stations located at the unit operator's desk, ~~the electrical control room operator's desk, the shift operations supervisor's desk,~~ or the auxiliary control room.

The sound-powered telephone systems are completely independent of power, each other, and all other systems provided. As long as a complete metallic path exists between instruments, communications can be maintained since the instruments supplied with these systems are very rugged and will successfully withstand high shocks, negligence, and abuse. If permanently installed wires are rendered unusable for any reason, a temporary pair of wires can be used with the sound-powered instruments.

The in-plant radio repeater system has no components in the communications room and, therefore, would not be affected by the total destruction of this room. The onsite radio paging system, however, depends on equipment located in the communications room and would be inoperative.

Both VHF radio systems are powered by battery- and/or diesel backed ac sources and would remain operative following loss of offsite power.

Refer to Figure 9.5-19 for availability of intraplant communications during various postulated conditions.

9.5.2.5 Inspection and Tests

Two communications systems are covered by preoperational test (TVA-11):

1. The sound-powered telephone systems provided for the backup control center, health physics office, and Diesel Building shielded room;

2. The codes, alarms, and paging system.

the major power supply is through two alternate feeders from the 6.9-kV common boards A and B to selective and interrupter switch and 3-phase 6900-120/208-volt ac transformers, feeding a lighting board. These lighting boards are located in the Turbine and Auxiliary Buildings of the main plant. Other lighting boards in the Service Building, Office Buildings, gatehouse, etc., are fed from 480V boards through 3-phase 480-120/208V ac transformers. These lighting boards feed the normal lighting cabinets, designated by the prefix LC___, distributed throughout the main plant. In the MCR, alternate rows of fixtures or alternate fixtures are fed from different lighting boards to prevent total blackout in a particular area in case of failure of one of the other lighting boards or cabinets.

The second system is the standby lighting, which forms a part of the normal lighting requirements and is normally energized at all times. This system is fed from 480V Reactor MOV boards 1A2-A, 1B2-B, 2A2-A, and 2B2-B to 3-phase 480-120/208V ac transformers to each standby lighting cabinet, designated by the prefix LS___ . The Reactor MOV boards have a normal and alternate ac power supply and in event of their failure are fed from the standby diesel generators. The cable feeders to the standby cabinets located in the Seismic Category I structure are routed in redundant raceways and the fixtures are dispersed among the normal lighting fixtures.

The third lighting system is referred to as the emergency system. It consists of two systems as described in Section 9.5.3.1. The 125V dc emergency lighting system is electrically held in the off position until a power failure occurs on the associated standby lighting systems. Then the emergency lighting cabinets, designated by the prefix LD___, are automatically energized from the 125V dc vital battery boards. This system is an essential supporting auxiliary system for the ESF, and the cable feeders to the LD cabinets are routed on the redundant ESF cable tray system or in conduit. The fixtures are incandescent type and are dispersed among the normal and standby fixtures with alternate emergency fixtures being fed from redundant power trained LD cabinets.

The individual eight-hour battery pack emergency lighting system is automatically held in the de-energized state until loss of the normal ac supply. A charger monitors battery voltage and charges on fast rate when necessary. Solid-state circuits continually monitor both ac and dc current. The transfer switch circuit instantly connects lamps to battery on ac failure and disconnects them when normal power is restored. In some cases, the lamp heads are mounted remote from the units to obtain adequate light distribution.

9.5.3.3 Diesel Generator Building Lighting System

The Diesel Generator Building lighting cabinets are fed through 480-208/120V 3-phase local lighting transformers, which in turn are fed from the diesel 480V auxiliary boards respectively. Each of these auxiliary boards has dual feeders from the 480V shutdown boards during normal operation. In the event of an ac power failure to the 480V shutdown boards, the diesel should start within the prescribed time to provide the 480V ac power requirements for the safe shutdown of the plant through the standby feeders to the 480V shutdown boards, thus supplying power again to the Diesel Generator Building lighting transformers. Each diesel generator unit has a lighting cabinet which

heaters are controlled by thermostats, and the lubrication oil circulation pumps run continuously when the engine is not running. This recirculation ensures the lube-oil temperature is maintained at 85°F (minimum) during the tandby mode.

Each diesel generator unit is provided with two closed engine cooling water loops (one for each engine), for which the heat sink is provided by the ERCW system. (Refer to Section 9.2.1). The ERCW flows through the tube side of the skid-mounted heat exchangers.

.5.5.3 Safety Evaluation

The cooling water is supplied to the heat exchangers of each diesel generator unit through redundant headers of the ERCW system. The system isolation valves are so arranged as to provide the capability to isolate either cooling source in the event of a component malfunction or excessive leakage from the system. Refer to Figures 9.2-1 ~~through~~ and 9.2-4A. Therefore a malfunction (single failure of a component) or loss of one cooling water source can not jeopardize the function of a diesel generator unit. Both the non-skid-mounted air-start piping and fire protection piping located in the vicinity of the diesel generator cooling water system are designed to Seismic Category I(L) to ensure that no seismic event will degrade the functional capability of the diesel generator cooling water system. A failure modes and effects analysis for the diesel generator cooling water system is presented in Table 9.5-2.

9.5.5.4 Tests and Inspections

The ERCW system within the Diesel Generator Building is hydrostatically tested in accordance with the requirements of ASME Section III and is functionally tested in accordance with Chapter 14.0. System components are accessible for periodic inspections during operation.

All skid-mounted diesel generator cooling water system components are inspected and serviced as specified in the scheduled maintenance program for the Watts Bar Nuclear Plant diesel generator units.

9.5.6 Diesel Generator Starting System

9.5.6.1 Design Bases

Each diesel engine associated with the five tandem diesel generator units is equipped with an independent pneumatic starting system. See Figure 9.5-24. The diesel starting air system components are housed with their respective diesel generator units within the diesel generator rooms in the Diesel Generator Building and ADGB (not required for Unit 1 operation) which are a Seismic Category I structure designed to withstand the effects of tornadoes, credible missiles, floods, rain, snow, or ice, as defined in Chapter 3, Sections 3.3, 3.4, and 3.5.

The supply headers from each air compressor to the isolation check valve on its skid-mounted accumulator are designed to Seismic Category I(L) requirements. The supply headers from each loadless start device to the isolation check valve and the normally closed bypass valve at the skid-mounted accumulator are designed to Seismic Category I requirements.

The diesel generator skid-mounted starting air system piping and components are vendor supplied, safety-related, ANSI B31.1, Seismic Category I. All modifications to the skid-mounted starting air system piping are required to be performed to meet the intent of ASME Section III, Class 3 (TVA Class C).

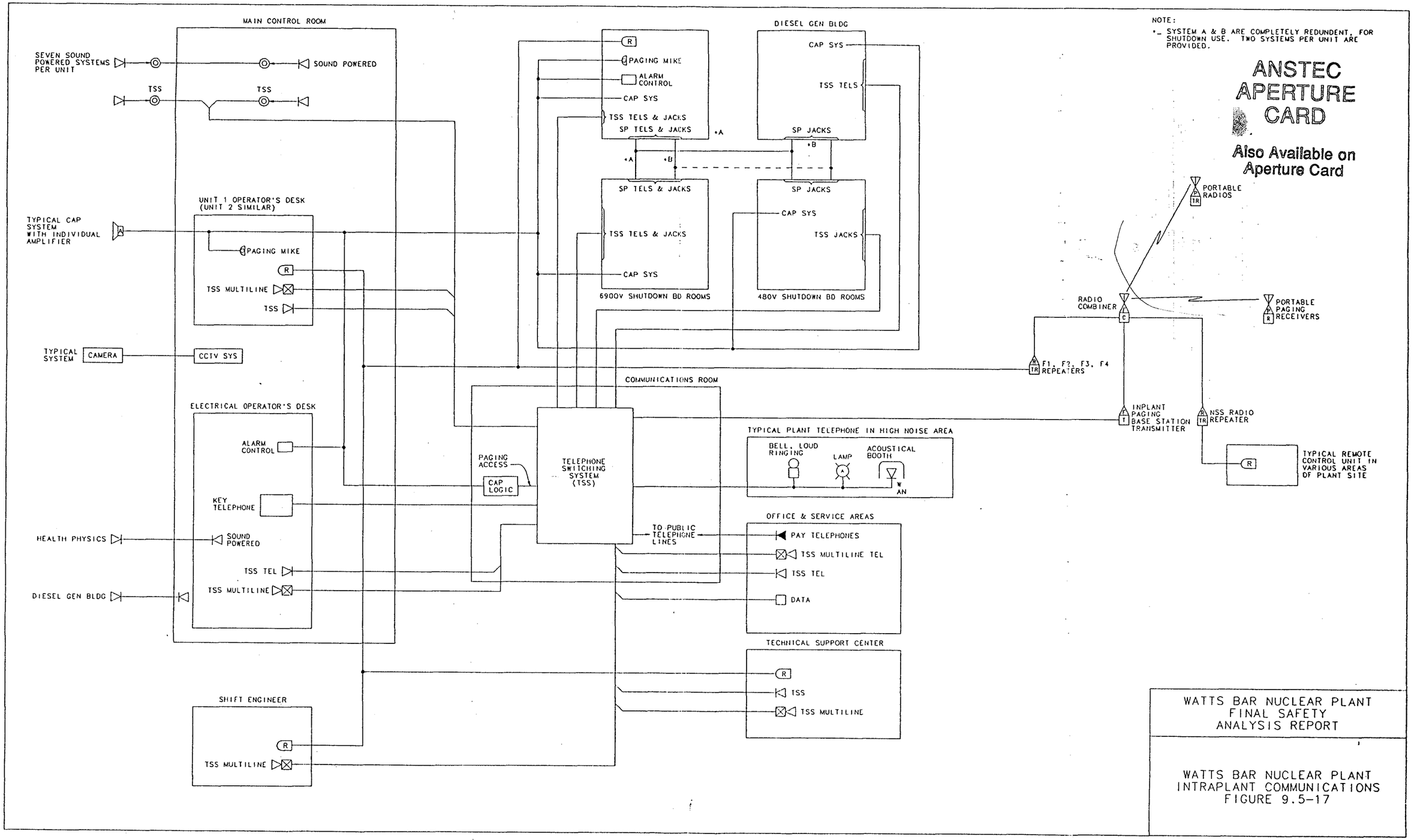

ANSTEC APERTURE CARD

Also Available on Aperture Card

WATTS BAR NUCLEAR PLANT
FINAL SAFETY
ANALYSIS REPORT

WATTS BAR NUCLEAR PLANT
INTRAPLANT COMMUNICATIONS
FIGURE 9.5-17

PROCADAM MAINTAINED DRAWING
THIS CONFIGURATION CONTROL DRAWING IS MAINTAINED BY THE WBN CAD UNIT AND IS NOW PART OF THE TVA PROCADAM DATABASE

9508240141-03

The 'Loss of Normal Feedwater' and loss of offsite power analyses in Chapter 15 demonstrate that the auxiliary feedwater system satisfies the design bases described in this section.

In the event that loss of offsite power (LOOP) occurs, 410 gpm of AFW delivered to two steam generators within one minute will prevent relief of reactor coolant via the pressurizer safety valves. Water levels in the steam generators will remain above the required minimum tube sheet coverage. The AFW system meets these requirements even when the single failure criterion is applied.

In the event of a feedwater line break, essentially the same requirements are imposed and act as for the LOOP case. Other cases discussed in Section 10.4.9.1 impose less stringent conditions.

Following a loss-of-coolant accident (LOCA) for a small break, the RCS pressure and temperature decrease at a relatively slow rate. The AFW system provides sufficient flow to the steam generators so that RCS cooldown can proceed. In this case, the AFW system function is similar to its function following other events described in Section 10.4.9.1, such as loss of offsite electrical power. In contrast, the AFW system serves a distinctly different function during a large break LOCA, where steam generator tube leaks may be present. A large LOCA causes a rapid depressurization of the RCS so that the secondary side pressure and temperature exceed primary pressure and temperature, and consequently any fission products in the RCS cannot escape to the secondary side. Subsequent cooling of the secondary side fluid could eventually reduce the secondary side pressure to atmospheric, permitting any fission products in the RCS to escape into the secondary system. The AFW system is used to maintain sufficient water level on the steam generator secondary side so that static head prevents primary-to-secondary tube leakage and prevents the escape of any fission products.

Whenever a flood above plant grade is anticipated, an orderly shutdown to hot shutdown and a cooldown to cold shutdown will be initiated immediately. In a little more than 5 hours after reactor shutdown, the secondary system pressure will be reduced to approximately 100 psig. Within 27 hours after reactor shutdown, the fire-protection system piping will be connected to the auxiliary feedwater discharge piping by means of special spool pieces not normally installed, and ~~the fire protection system will maintain~~ the secondary system pressure ~~at 100 psig~~. When the flood exceeds plant grade, the auxiliary feedwater pumps will be inoperable, and the fire protection pumps, which are located above the maximum possible flood elevation, will supply feedwater.

Appropriate portions of the HPFP system are designed to function under normal conditions as well as for the maximum possible flood with the coincident or subsequent loss of the upstream and/or downstream dams. The HPFP pumps are located in the intake station above the flood line and are arranged to supply water directly to the steam generators in the event the auxiliary feedwater pumps are flooded.

will be maintained ≤ 100 psia. In the event of the failure of HPHP valve 0-PCV-26-18 to close, the secondary system pressure can be maintained ≤ 80 psig. This pressure is sufficient for decay heat removal.

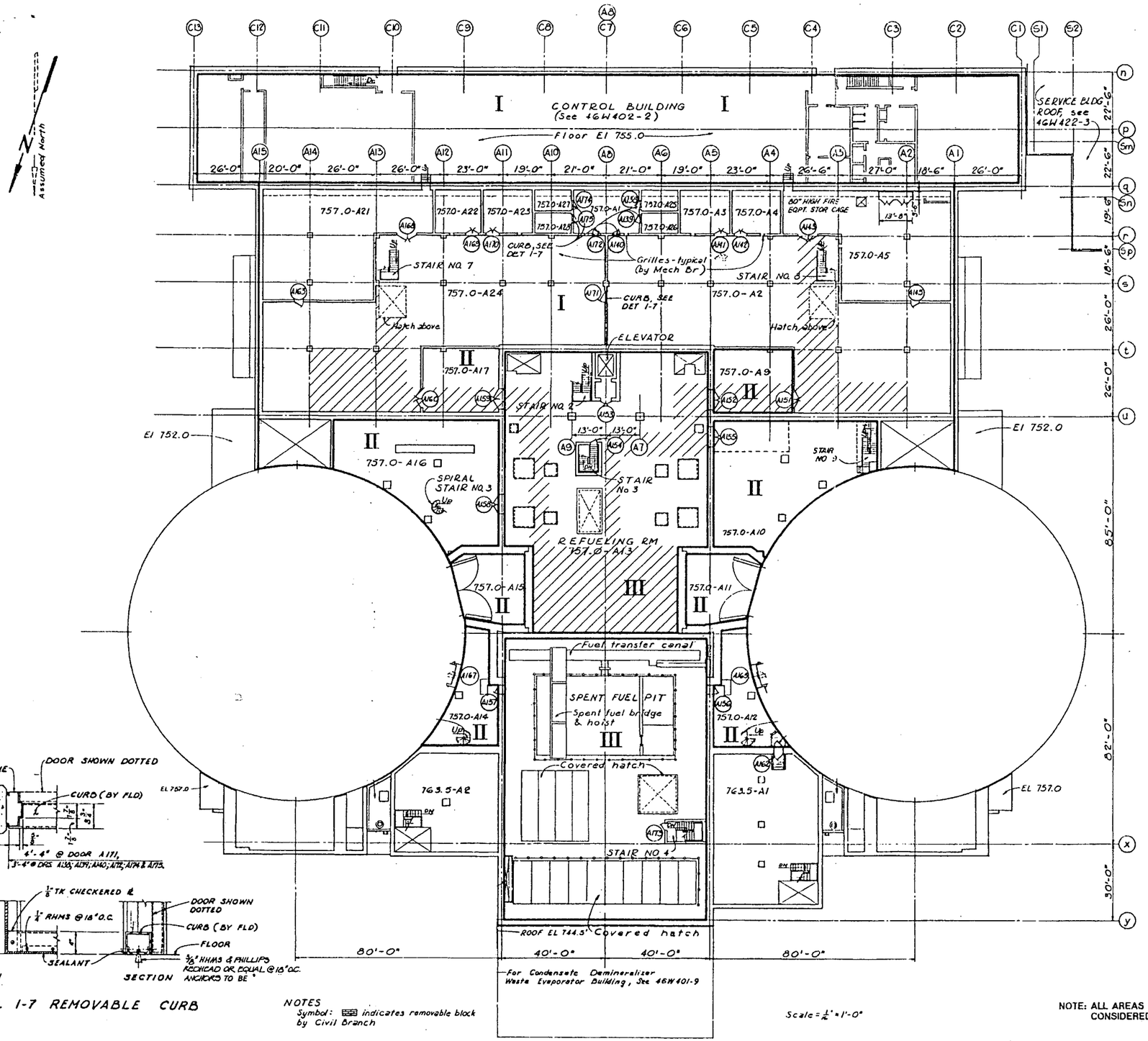

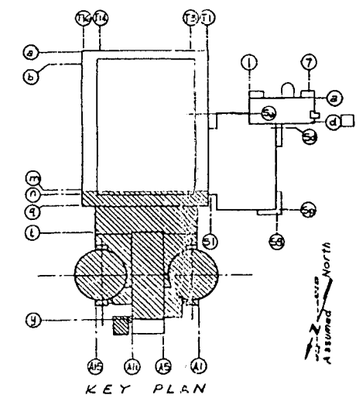

ANSTEC APERTURE CARD

Also Available on Aperture Card

ROOM FINISH SCHEDULE							
ROOM NO.	ROOM NAME	FLOOR	BASE	WALLS	SUSPD CLG FINISH	SUSPD CLG ELEV	REMARKS
757.0-A1	Auxiliary Control Room	Conc	—	Conc	—	—	
757.0-A2	6.9 KV & 480V Shutdown Bd Rm A	Conc	—	Conc	—	—	
757.0-A3	125V Vital Batt Bd Rm II	Conc	—	Conc	—	—	
757.0-A4	125V Vital Batt Bd Rm I	Conc	—	Conc	—	—	
757.0-A5	480V Shutdown Bd Rm 1B	Conc	—	Conc	—	—	
757.0-A9	Personnel & Equip Access	Conc	—	Conc	—	—	
757.0-A10	Spares	Conc	—	Conc	—	—	
757.0-A11	Reactor Bldg Equip Hatch	Conc	—	Conc	—	—	
757.0-A12	Reactor Bldg Access Rm	Conc	—	Conc	—	—	
757.0-A13	Refueling Room	Conc	—	Conc	—	—	
757.0-A14	Reactor Bldg Access Rm	Conc	—	Conc	—	—	
757.0-A15	Reactor Bldg Equip Hatch	Conc	—	Conc	—	—	
757.0-A16	Emer Gas Treatment Filter	Conc	—	Conc	—	—	
757.0-A17	Personnel & Equip Access	Conc	—	Conc	—	—	
757.0-A21	480V Shutdown Bd Rm 2A	Conc	—	Conc	—	—	
757.0-A22	125V Vital Batt Bd Rm II	Conc	—	Conc	—	—	
757.0-A23	125V Vital Batt Bd Rm III	Conc	—	Conc	—	—	
757.0-A24	6.9 KV & 480 V Shutdown Bd Rm B	Conc	—	Conc	—	—	
757.0-A25	Aux Control Inst Rm 1A	Conc	—	Conc	—	—	
757.0-A26	Aux Control Inst Rm 1B	Conc	—	Conc	—	—	
757.0-A27	Aux Control Inst Rm 2A	Conc	—	Conc	—	—	
757.0-A28	Aux Control Inst Rm 2B	Conc	—	Conc	—	—	
	Stair No 3	Conc	—	Conc	—	—	
	Stair No 4	Conc	—	Conc	—	—	
763.5-A1	Ice Bin Equipment Rm	Conc	—	Conc	—	—	
763.5-A2	UHI Equipment Rm	Conc	—	Conc	—	—	

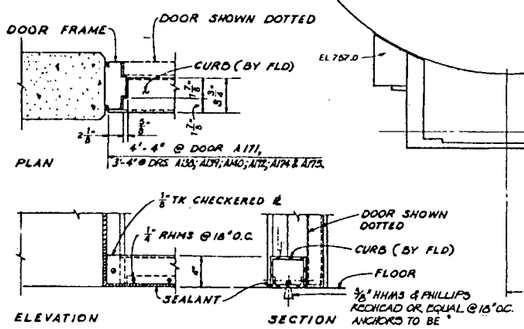

DETAIL 1-7 REMOVABLE CURB

NOTES
Symbol: indicates removable block by Civil Branch

Scale = 1/2" = 1'-0"

NOTE: ALL AREAS NOT LABELED ON THIS DRAWING ARE CONSIDERED TO BE RADIATION ZONE "I".

REVISED BY AMENDMENT 75

WATTS BAR
FINAL SAFETY
ANALYSIS REPORT

POWERHOUSE
AUXILIARY, REACTOR & CONTROL BUILDING
PLAN EL 755.0 & 757.0
RADIATION ZONE MAP
FSAR FIG 12.3-4

SCANNED DOCUMENT
THIS IS A SCANNED DOCUMENT MAINTAINED ON THE WBNP OPTIGRAPHICS SCANNER DATABASE

9508240141-04

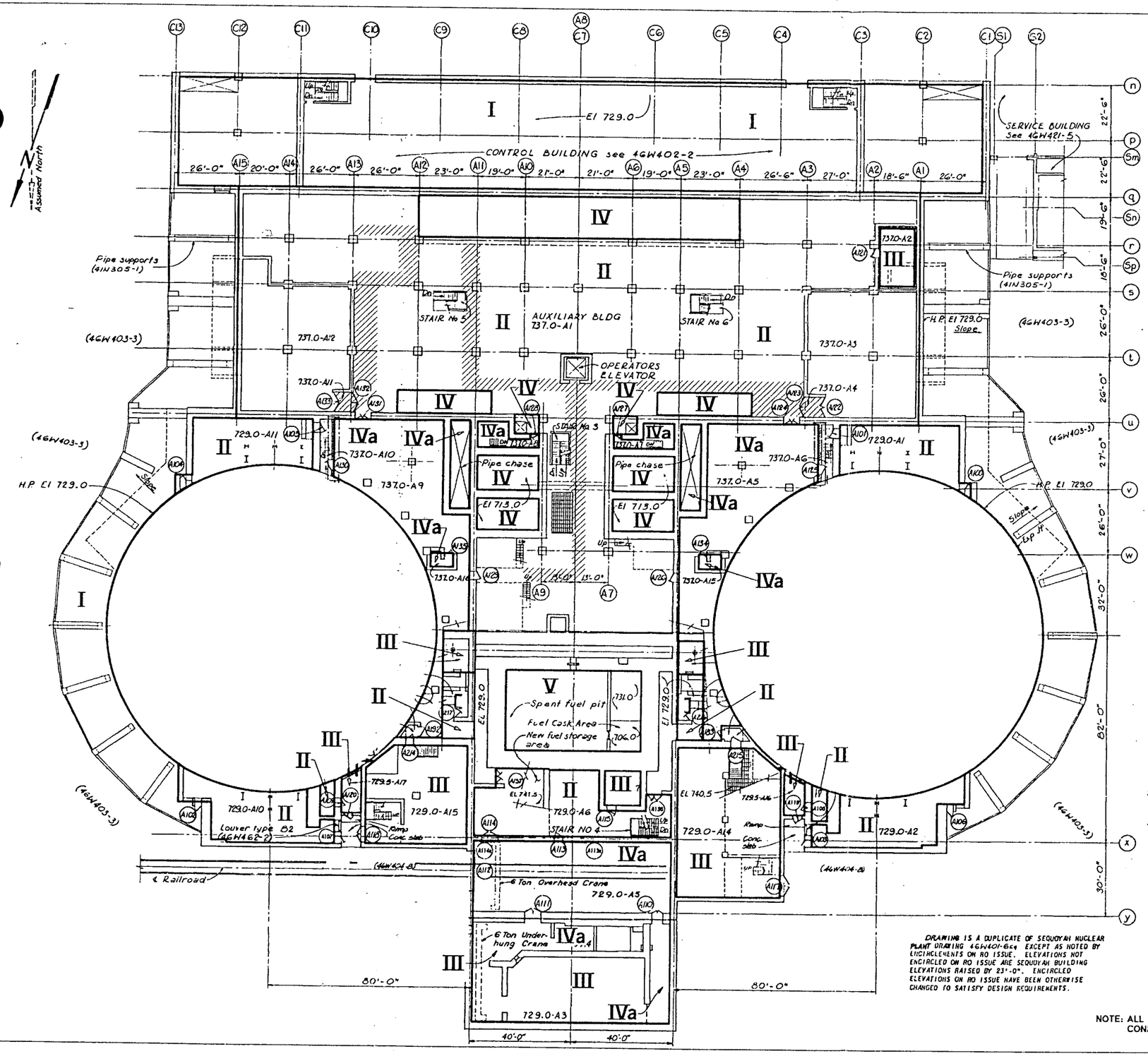

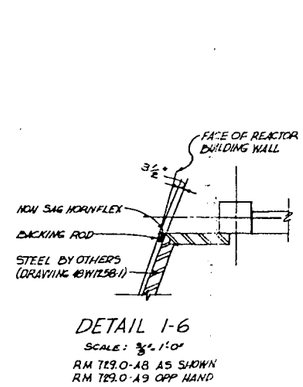

DETAIL 1-6

SCALE: ½" = 1'-0"

RM 729.0-A8 A5 SHOWN
RM 729.0-A9 OPP HAND

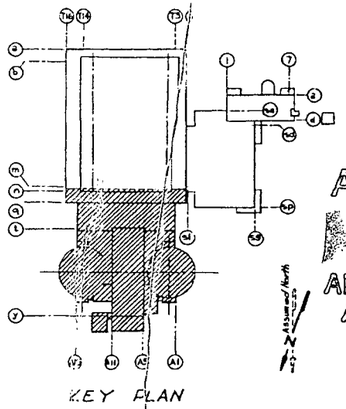

KEY PLAN

ANSTEC APERTURE CARD

Also Available on Aperture Card

ROOM FINISH SCHEDULE

ROOM No	ROOM NAME	FLOOR	BASE	WALLS	SUSPD CLG FINISH	SUSPD CLG ELEV	REMARKS
729.0-A1	Main Steam Valve Room	Conc	—	Conc	—	—	
729.0-A2	Main Steam Valve Room	Conc	—	Conc	—	—	
729.0-A3	Waste Package Area	Conc	—	Conc	—	—	
729.0-A4	Waste Package Area	Conc	—	Conc	—	—	
729.0-A5	Cask Loading Area	Conc	—	Conc	—	—	
729.0-A6	N2 Storage Area	Conc	—	Conc	—	—	
729.0-A7	Cask Decontamination	Conc	—	Conc	—	—	
729.0-A8	Post Acc. Sample Rm.	Conc	—	Conc	—	—	
729.0-A9	Post Acc. Sample Rm.	Conc	—	Conc	—	—	
729.0-A10	Main Steam Valve Room	Conc	—	Conc	—	—	
729.0-A11	Main Steam Valve Room	Conc	—	Conc	—	—	
729.0-A12	Steam Valve Instr Rm A	Conc	—	Conc	—	—	
729.0-A13	Steam Valve Instr Rm B	Conc	—	Conc	—	—	
729.0-A14	UHI Equip	Conc	—	Conc	—	—	
729.0-A15	UHI Equip	Conc	—	Conc	—	—	
729.5-A16	Shield Bldg Vent Bd Mon Eq	Conc	—	Conc	—	—	
729.5-A17	Shield Bldg Vent Bd Mon Eq	Conc	—	Conc	—	—	
737.0-A1	Auxiliary Building	Conc	—	Conc	—	—	
737.0-A2	Hot Instrument Shop	Fac. Tile	Fac. Tile	Fac. Tile	See note below	—	4GW452-3
737.0-A3	Htg & Vent	Conc	—	Conc	—	—	
737.0-A4	Air Lock	Conc	—	Conc	—	—	
737.0-A5	Ventilation & Purge Air	Conc	—	Conc	—	—	
737.0-A6	Air Lock	Conc	—	Conc & Conc. blk	—	—	4GW403-4
737.0-A7	Let Down Heat Exch	Conc	—	Conc	—	—	
737.0-A8	Let Down Heat Exch	Conc	—	Conc	—	—	
737.0-A9	Ventilation & Purge Air	Conc	—	Conc	—	—	
737.0-A10	Air Lock	Conc	—	Conc & Conc. blk	—	—	4GW403-4
737.0-A11	Air Lock	Conc	—	Conc	—	—	
737.0-A12	Heating & Vent	Conc	—	Conc	—	—	
737.0-A13	Air Lock	Conc	—	Conc	—	—	
737.0-A14	Air Lock	Conc	—	Conc	—	—	
737.0-A15	GF Fuel Detector Rm	Conc	—	Conc	—	—	
737.0-A16	GF Fuel Detector Rm	Conc	—	Conc	—	—	

* Ceiling in Hot Instrument Shop to have sand finish plaster and metal lath on concrete ceiling.

NOTES:
1. Symbol indicates removable blocks by Civil Branch
2. For concrete block walls reinforced for earthquake loading see 4GW409-4
3. Symbol indicates chain barrier, furnished and installed by Field

COMPANION DRAWINGS:
4GW403-3, 4GW404-8,

Scale: ¼" = 1'-0"

DRAWING IS A DUPLICATE OF SEQUOYAH NUCLEAR PLANT DRAWING 4GW407-6c, EXCEPT AS NOTED BY ENCIRCLEMENTS ON RO ISSUE. ELEVATIONS NOT ENCIRCLED ON RO ISSUE ARE SEQUOYAH BUILDING ELEVATIONS RAISED BY 23'-0". ENCIRCLED ELEVATIONS ON RO ISSUE HAVE BEEN OTHERWISE CHANGED TO SATISFY DESIGN REQUIREMENTS.

NOTE: ALL AREAS NOT LABELED ON THIS DRAWING ARE CONSIDERED TO BE RADIATION ZONE "I".

REVISED BY AMENDMENT 78

WATTS BAR
FINAL SAFETY
ANALYSIS REPORT

POWERHOUSE
AUXILIARY, REACTOR & CONTROL BUILDINGS
RADIATION ZONE MAP
PLAN-EL 729.0 & 737.0
FSAR FIG 12.3-8

SCANNED DOCUMENT
THIS IS A SCANNED DOCUMENT MAINTAINED ON THE WBNP OPTI GRAPHICS SCANNER DATABASE

9508240141-05

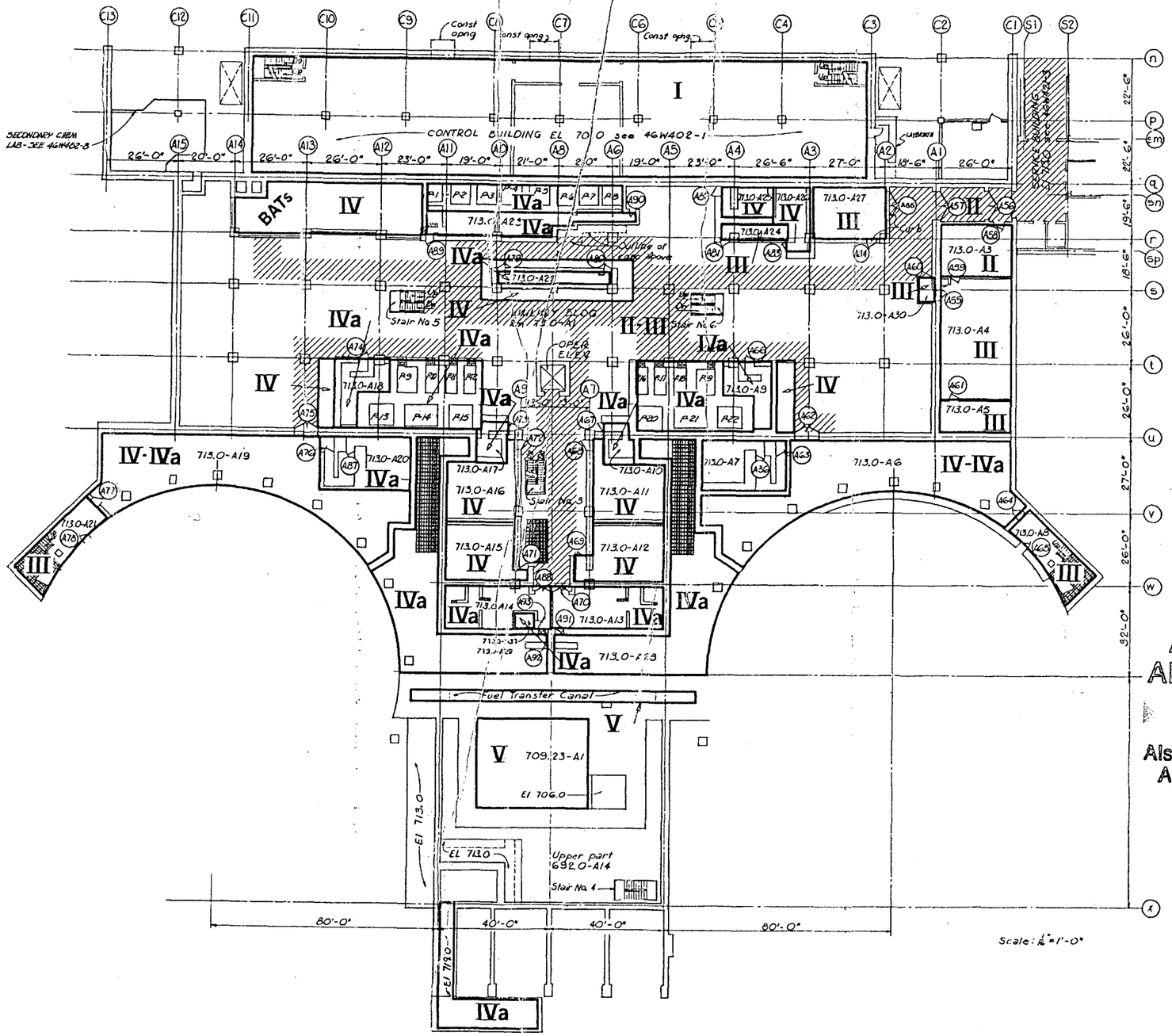

PIT FIN. SCHEDULE		
RM NO.	FLOOR	WALLS
P-1	CONC.	CONC.
P2	CONC.	CONC.
P3	CONC.	CONC.
P-4	CONC.	CONC.
P5	CONC.	CONC.
P-6	CONC.	CONC.
P-7	CONC.	CONC.
P8	CONC.	CONC.
P-9	CONC.	CONC.
P-10	CONC.	CONC.
P-11	CONC.	CONC.
P-12	CONC.	CONC.
P-13	CONC.	CONC.
P-14	CONC.	CONC.
P-15	CONC.	CONC.
P-16	CONC.	CONC.
P-17	CONC.	CONC.
P18	CONC.	CONC.
P-19	CONC.	CONC.
P20	CONC.	CONC.
P-21	CONC.	CONC.
P22	CONC.	CONC.

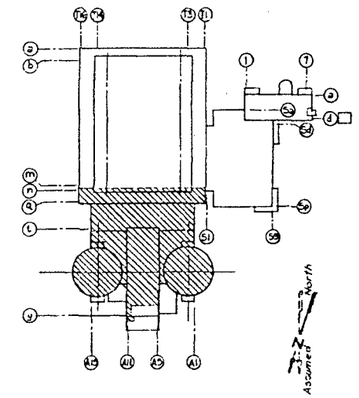

KEY PLAN

ROOM FINISH SCHEDULE

ROOM NO.	ROOM NAME	FLOOR	BASE	WALLS	SUSPD CLG FINISH	SUSPD CLG ELEV	REMARKS
709.23-A1	Spent Fuel Pit	Conc	—	Conc	—	—	
713.0-A1	Auxiliary Building	Conc	—	Conc	—	—	
713.0-A2	Air Lock	Conc	—	Conc	—	—	
713.0-A3	Titration Room	Res tile	Vinyl tile	Conc	S.F. plas	722'-0"	4GW452-3
713.0-A4	Radiochemical Lab	Res tile	Vinyl tile	Conc	S.F. plas	VARIOUS HEIGHTS	4GW452-3
713.0-A5	Counting Room	Res tile	Vinyl tile	Conc	S.F. plas	721'-0"	4GW452-3
713.0-A6	Pipe Gallery	Conc	—	Conc	—	—	
713.0-A7	Vol Control Tank Room	Conc	—	Conc	—	—	
713.0-A8	Reactor Bldg Access Rm	Conc	—	Conc	—	—	
713.0-A9	Valve Gallery	Conc	—	Conc	—	—	
713.0-A10	Seal Water Heat Exchgr 1A	Conc	—	Conc	—	—	
713.0-A11	Heat Exchangers 1B	Conc	—	Conc	—	—	
713.0-A12	Heat Exchangers 1A	Conc	—	Conc	—	—	
713.0-A13	Sample Room I	Conc	—	Conc	—	—	4GW452-6
713.0-A14	Sample Room II	Conc	—	Conc	—	—	4GW452-6
713.0-A15	Heat Exchangers 2A	Conc	—	Conc	—	—	
713.0-A16	Heat Exchangers 2B	Conc	—	Conc	—	—	
713.0-A17	Seal Water Heat Exchgr 2A	Conc	—	Conc	—	—	
713.0-A18	Valve Gallery	Conc	—	Conc	—	—	
713.0-A19	Pipe Gallery	Conc	—	Conc	—	—	
713.0-A20	Vol Control Tank Room	Conc	—	Conc	—	—	
713.0-A21	Reactor Bldg Access Rm	Conc	—	Conc	—	—	
713.0-A22	Valve Gallery	Conc	—	Conc	—	—	
713.0-A23	CVCS Valve Gallery	Conc	—	Conc	—	—	
713.0-A24	WGC Valve Gallery	Conc	—	Conc	—	—	
713.0-A25	Waste Gas Comp B	Conc	—	Conc	—	—	
713.0-A26	Waste Gas Comp A	Conc	—	Conc	—	—	
713.0-A27	Decontamination Rm	Conc	—	Conc	—	—	4GW461-3
713.0-A28	Pipe Chase	Conc	—	Conc	—	—	
713.0-A29	Pipe Chase	Conc	—	Conc	—	—	
713.0-A30	Air Lock	Conc	—	Conc	—	—	
713.0-A31	Waste Gas Analyzer	Conc	—	Conc	—	—	

NOTES:
Symbol: ▦ indicates removable blocks by Civil Branch

ANSTEC APERTURE CARD

Also Available on Aperture Card

NOTE: ALL AREAS NOT LABELED ON THIS DRAWING ARE CONSIDERED TO BE RADIATION ZONE "I".

REVISED BY AMENDMENT 72

WATTS BAR
FINAL SAFETY
ANALYSIS REPORT

POWERHOUSE
AUXILIARY REACTOR & CONTROL BUILDINGS
PLAN EL 708.0 & 713.0
RADIATION ZONE MAP
FSAR FIG 12.3-10

SCANNED DOCUMENT
THIS IS A SCANNED DOCUMENT MAINTAINED ON THE WBNP OPTIGRAPHICS SCANNER DATABASE

9508240141-06

COMPUTER GRAPHICS FILE NO.
RASTER: FSAR_FIG_12.3-12_R2
VECTOR: FSAR_FIG_12.3-12_R2

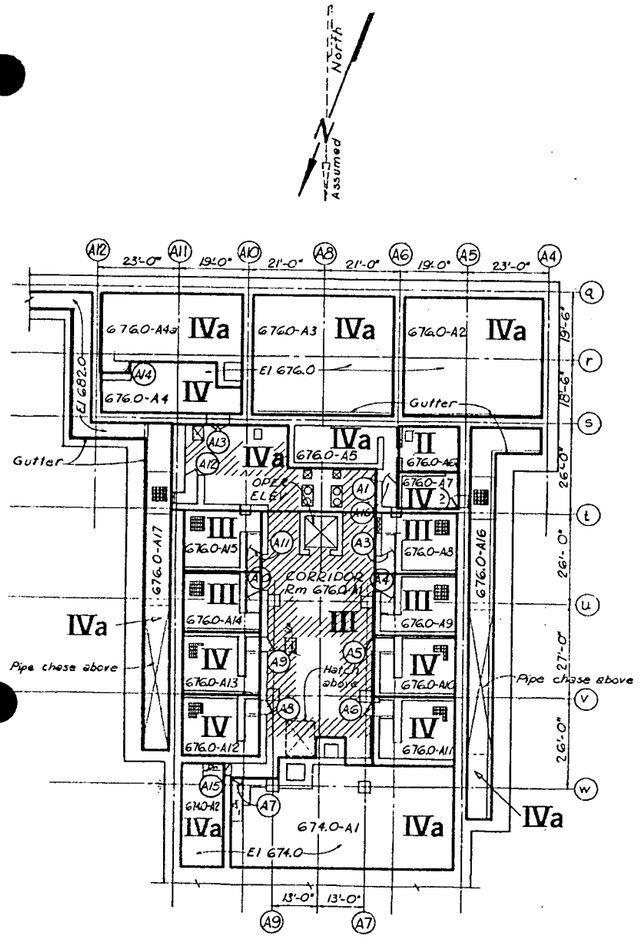

PLAN EL 676.0

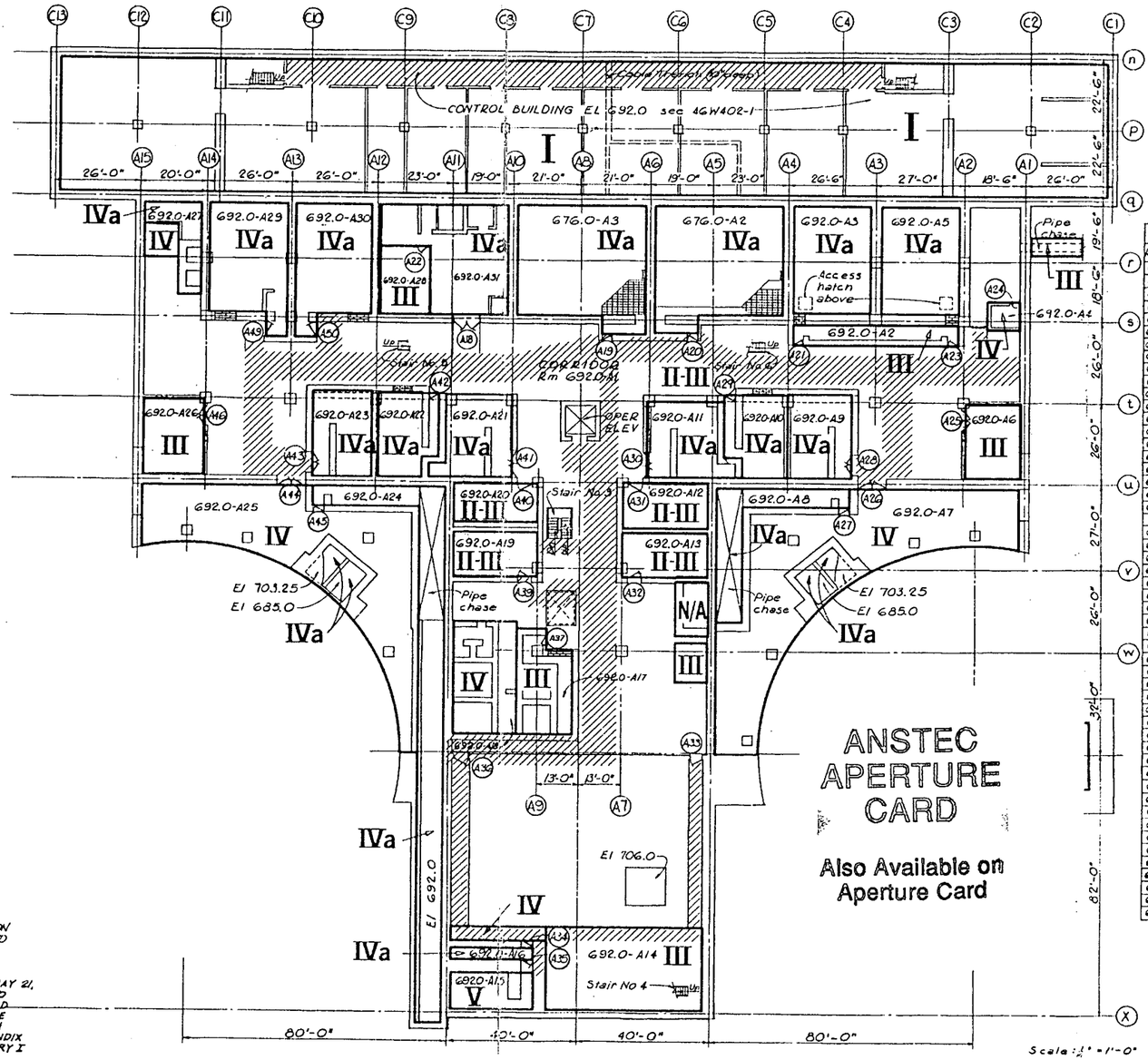

PLAN EL 692.0

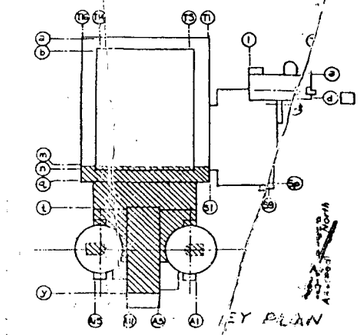

PLAN

ROOM NO	ROOM NAME	FLOOR	BASE	WALLS	CEILING	REMARKS
676.0-11	Waste Hold Up Tank	Conc	—	Conc	—	
676.0-12	Waste Evap Feed Pump	Conc	—	Conc	—	
676.0-13	Corridor	Conc	—	Conc	—	
676.0-14	Hold-Up Tank Rm A	Conc	—	Conc	—	
676.0-15	Hold-Up Tank Rm B	Conc	—	Conc	—	
676.0-16	Floor Drain Col Evap & Filter Rm	Conc	—	Conc	—	
676.0-17	Floor Drain Col Tank Rm	Conc	—	Conc	—	
676.0-18	Gas Stripper Feed Pump	Conc	—	Conc	—	
676.0-19	Spare	Conc	—	Conc	—	
676.0-17	Spare	Conc	—	Conc	—	
676.0-18	Containment Spray Pump 1B-B	Conc	—	Conc	—	
676.0-19	Containment Spray Pump 1A-A	Conc	—	Conc	—	
676.0-20	RHR Pump Rm 1B-B	Conc	—	Conc	—	
676.0-21	RHR Pump Rm 1A-A	Conc	—	Conc	—	
676.0-22	RHR Pump Rm 2A-A	Conc	—	Conc	—	
676.0-23	RHR Pump Rm 2B-B	Conc	—	Conc	—	
676.0-24	Containment Spray Pump 2A-A	Conc	—	Conc	—	
676.0-25	Containment Spray Pump 2B-B	Conc	—	Conc	—	
676.0-26	Pipe Gallery	Conc	—	Conc	—	
676.0-27	Pipe Gallery	Conc	—	Conc	—	
692.0-A1	Corridor	Conc	—	Conc	—	
692.0-A2	Valve Gallery	Conc	—	Conc	—	
692.0-A3	Gas Decay Tank Rm	Conc	—	Conc	—	
692.0-A4	Chemical Drain Tank Rm	Conc	—	Conc	—	
692.0-A5	Gas Decay Tank Rm	Conc	—	Conc	—	
692.0-A6	Aux Feedwater Pump 1B-B	Conc	—	Conc	—	
692.0-A7	Pipe Gallery	Conc	—	Conc	—	
692.0-A8	Pipe Gallery & Chase	Conc	—	Conc	—	
692.0-A9	Charging Pump 1A-A	Conc	—	Conc	—	
692.0-A10	Charging Pump 1B-B	Conc	—	Conc	—	
692.0-A11	Charging Pump 2C	Conc	—	Conc	—	
692.0-A12	Safety Injection Pump 1B-B	Conc	—	Conc	—	
692.0-A13	Safety Injection Pump 1A-A	Conc	—	Conc	—	
692.0-A14	Cask Decontam Area	Conc	—	Conc	—	
692.0-A15	Spent Resin Tank Rm	Conc	—	Conc	—	
692.0-A16	Valve Gallery	Conc	—	Conc	—	
692.0-A17	Hyperfiltration Decontam Area	Conc	—	Conc	—	
692.0-A18	CRT Storage Rm	Conc	—	Conc	—	
692.0-A19	Safety Injection Pump 2A-A	Conc	—	Conc	—	
692.0-A20	Safety Injection Pump 2B-B	Conc	—	Conc	—	
692.0-A21	Charging Pump 2C	Conc	—	Conc	—	
692.0-A22	Charging Pump 2B-B	Conc	—	Conc	—	
692.0-A23	Charging Pump 2A-A	Conc	—	Conc	—	
692.0-A24	Pipe Gallery & Chase	Conc	—	Conc	—	
692.0-A25	Pipe Gallery	Conc	—	Conc	—	
692.0-A26	Aux Feedwater Pump 2A-A	Conc	—	Conc	—	
692.0-A27	Concentrate Filter	Conc	—	Conc	—	
692.0-A28	Hyperfiltration Equip Rm B	Conc	—	Conc	—	
692.0-A29	Hyperfiltration Evap Package Rm B	Conc	—	Conc	—	
692.0-A30	Hyperfiltration Evap Package Rm A	Conc	—	Conc	—	
692.0-A31	Hyperfiltration Equip Rm A	Conc	—	Conc	—	

NOTES:
1. Symbol indicates removable blocks by Civil Branch
2. Symbol indicates chain barrier furnished and installed by Field
3. MASONRY WALLS & CEILINGS DESIGNATED AS QA(L) ON DRAWINGS FALL UNDER LIMITED FIRE PROTECTION PROGRAM. ALL CONSTRUCTION ACTIVITIES ASSOCIATED WITH THE ABOVE SHALL CONFORM TO 6-73 SPECIFICATIONS.
4. CONSTRUCTION SPECIFICATION G-21, R0, DATED MAY 21, 1957, APPLIES TO MASONRY INSTALLED PRIOR TO APRIL 20, 1983. ALL MASONRY WORK DESIGNATED AS QA(L) INSTALLED AFTER THIS DATE SHALL BE TESTED AND INSPECTED IN ACCORDANCE WITH CONSTRUCTION SPECIFICATION G-21, R0, APPENDIX A, "MASONRY WALLS LOCATED WITHIN CATEGORY I OR SAFETY RELATED STRUCTURES."

THIS DRAWING IS A DUPLICATE OF SEQUOYAH NUCLEAR PLANT DRAWING 4GW402-1 AS EXCEPT AS NOTED BY ENCIRCLEMENTS ON R0 ISSUE. ELEVATIONS NOT ENCIRCLED ON R0 ISSUE ARE SEQUOYAH BUILDING ELEVATIONS RAISED BY 23'-0". ENCIRCLED ELEVATIONS ON R0 ISSUE HAVE BEEN OTHERWISE CHANGED TO SATISFY DESIGN REQUIREMENTS.

NOTE: ALL AREAS NOT LABELED ON THIS DRAWING ARE CONSIDERED TO BE RADIATION ZONE "I".

Scale: 1" = 1'-0"

REVISED BY AMENDMENT 72

WATTS BAR
FINAL SAFETY
ANALYSIS REPORT

POWERHOUSE
AUXILIARY REACTOR & CONTROL BUILDINGS
PLAN EL 676.0 & 692.0
RADIATION ZONE MAP
FSAR FIG 12.3-12

ANSTEC
APERTURE
CARD

Also Available on
Aperture Card

SCANNED DOCUMENT
THIS IS A SCANNED DOCUMENT MAINTAINED ON THE WBNP OPTIGRAPHICS SCANNER DATABASE

9508240141-07

5. Notify the PORC of any safety significant disagreement between reviewing organizations.

13.4.1.2 PORC Responsibilities

The PORC is a multidisciplined committee responsible for providing oversight review of administrative and programmatic documents required for safe operation of the plant. Review of subtier implementing procedures (Technical Instructions, Surveillance Instructions, Maintenance Instructions, etc.) is the responsibility of qualified technical reviewers, but remains under the cognizance of PORC.

a. PORC shall be responsible for the review of the following:

1. Administrative procedures, program descriptions, and major changes thereto for the following:

   a. The applicable procedures recommended in Regulatory Guide 1.33, Revision 2, Appendix A, February 1978
   b. The emergency operating procedures required to implement the requirements of NUREG-0737 and NUREG-0737, Supplement 1
   c. Fire Protection Program
   d. Process Control Program (PCP)
   e. Offsite Dose Calculation Manual (ODCM)
   f. Primary Coolant Sources Outside Containment
   g. In-Plant Radiation Monitoring
   h. Post-Accident Sampling
   i. Radioactive Effluent Controls Program
   j. Radiological Environmental Monitoring Program
   k. Component Cyclic or Transient Limit
   l. Reactor Coolant Pump Flywheel Inspection Program
   m. Inservice Testing Program
   n. Steam Generator Tube Surveillance Program
   o. Secondary Water Chemistry Program
   p. Ventilation Filter Testing Program
   q. Explosive Gas and Storage Tank Radioactivity Monitoring Program
   r. Diesel Fuel Oil Testing Program
   s. Safety Function Determination Program (SFDP)
   t. Site Radiological Emergency Plan
   u. Radiation Protection Program
   v. Radwaste Treatment System
   w. Inservice Inspection Program

2. Administrative procedures as designated for PORC review in the Master Site Procedures List (MSPL).

3. Safety Evaluations as required by 10 CFR 50.59.

4. Proposed changes or modifications to unit systems or equipment that affect nuclear safety.

5. Violations of Technical Specifications. PORC will also prepare and forward reports covering the evaluations and recommendations to prevent recurrence to the Site Vice President and to the Nuclear Safety Review Board (NSRB).

15.5 ENVIRONMENTAL CONSEQUENCES OF ACCIDENTS

15.5.1 Environmental Consequences of a Postulated Loss of AC Power to the Plant Auxiliaries

The postulated accidents involving release of steam from the secondary system will not result in a release of radioactivity unless there is leakage from the reactor coolant system (RCS) to the secondary system in the steam generator. A conservative analysis of the potential offsite doses resulting from this accident is presented with steam generator leakage as a parameter. This analysis incorporates assumptions of one percent defective fuel, and steam generator leakage prior to the postulated accident for a time sufficient to establish equilibrium specific activity levels in the secondary system. A realistic analysis is also performed. Parameters used in both the realistic and conservative analyses are listed in Table 15.5-1.

The realistic assumptions used to determine the equilibrium concentrations of isotopes in the secondary system are as follows:

1. The primary to secondary leakage to the steam generators is assumed to be 1 gpm for one year prior to the accident.

2. Primary coolant activity is associated with 0.125% defective fuel and is given in Table 11.1-7.

3. The iodine partition factor is:

$$\frac{\text{amount of iodine/unit mass steam}}{\text{amount of iodine/unit mass liquid}} = 0.01$$

in the steam generators. The iodine partition factor is:

$$\frac{\text{amount of iodine/unit vol. gas}}{\text{amount of iodine/unit vol. liquid}} = 0.01 \text{ (Reference [1])}$$

in the condenser.

4. No noble gas is dissolved or contained in the steam generator water, i.e., all noble gas leaked to the secondary system is continuously released with steam from the steam generators through the condenser off gas system.

5. The blowdown rate from steam generators is a continuous 25 gpm per steam generator.

6. The 0-2 and 0-8 hour atmospheric dilution factors given in Appendix 15A and the 0-8 hour breathing rate of 3.47×10^{-4} m^3/sec are applicable. Doses are based on the dose models presented in Appendix 15A .

Assumptions used for the conservative analysis are the same as the realistic assumptions except 1% failed fuel is assumed.

The steam releases to the atmosphere for the loss of AC power are given in Table 15.5-1.

The gamma, beta, and thyroid doses for the loss of AC power to the plant auxiliaries at the exclusion area boundary and low population zone are given in Table 15.5-2 for the realistic analysis. These doses are calculated by the FENCDOSE computer code[16]. The doses for this accident are less than 25 rem whole body, 300 rem beta and 300 rem thyroid. This is well within the limits as defined in 10 CFR 100.

15.5.2 Environmental Consequences of a Postulated Waste Gas Decay Tank Rupture

Two analyses of the postulated waste gas decay tank rupture are performed: (1) a realistic analysis, and (2) an analysis based on Regulatory Guide 1.24 (Reference 2). The parameters used for each of these analyses are listed in Table 15.5-3.

The assumptions for the Regulatory Guide analysis are:

1. The reactor has been operating at full power with 1% defective fuel for the RG 1.24 analysis.

2. The maximum content of the decay tank assumed to fail is used for the purpose of computing the noble gas inventory in the tank. Radiological decay is taken into account in the computation only for the minimum time period required to transfer the gases from the reactor coolant system to the decay tank. For the Regulatory Guide 1.24 analysis, noble gas and iodine inventories of the tank are given in Table 15.5-4. For the realistic analysis, source terms are based on ANSI/ANS-18.1-1984 methodology[14].

3. The tank rupture is assumed to occur immediately upon completion of the waste gas transfer, releasing the entire contents of the tank through the auxiliary building vent ~~at ground level~~ to the outside atmosphere. The assumption of the release of the noble gas inventory from only a single tank is based on the fact that all gas decay tanks will be isolated from each other whenever they are in use.

4. The short-term (i.e., 0-2 hour) dilution factor at the exclusion area boundary given in Appendix 15A is used to evaluate the doses from the released activity. Doses are based on the dose models presented in Appendix 15A. The gamma, beta, and thyroid doses for the gas decay tank rupture at the exclusion area boundary and low population zone are given in Table 15.5-5 for both the realistic and Regulatory Guide 1.24 analyses.

15.5.3 Environmental Consequences of a Postulated Loss of Coolant Accident

The results of the analysis presented in this section demonstrate that the amounts of radioactivity released to the environment in the event of a loss-of-coolant accident do not result in doses which exceed the reference values specified in a 10 CFR 100.

where A_o is the initial activity. However, in general, P is time dependent and in some cases Λ is also time dependent.

The addition of material to the component, $P_{ij}(t)$, may come from two sources: (1) flow from another component in the system may add material to the component, (2) material may be produced within the component by radioactive decay. Thus, the addition rate for material i to component j can be expressed as:

$$P_{ij}(t) = P_{ij}^{(1)}(t) + P_{ij}^{(2)}(t) \tag{3}$$

where:

$P_{ij}^{(1)}(t) = \sum_{jj \neq j}^{n} c_{ijj-j}(t) A_{ijj}(t)$; $c_{ijj-j}(t)$ is the transfer coefficient of i from component jj to j, and $P_i^{(2)}(t) = \sum_{ii}^{n} \gamma_{ii-i} A_{iij}(t)$; γ_{ii-i} is the rate of production of i from ii in component j. Note that γ_{ii-i} is not normally a function of time or component.

Similarly, the loss from a component can be due to: (1) loss within the component (such as radioactive decay), (2) flow out of the component to other components, and (3) removal from the system. Thus, the loss rate from component j for material i can be expressed as:

$$\Lambda_{ij}(t) = \lambda_i + \Lambda_{ij}^{(2)}(t) + \Lambda_{ij}^{(3)}(t) \tag{4}$$

where λ_i is the removal rate inside the component due to radioactive decay (neither time nor component dependent),

$\Lambda_{ij}^{(2)}(t) = \sum_{jj \neq j}^{n} f_{ij-jj}(t)$; $f_{ij-jj}(t)$ is the transfer coefficient of material i from component j to jj, and $\Lambda_{ij}^{(3)}(t)$ is the removal from the system.

A computer program Source Transport Program (STP) has been developed to solve equation (1) for each isotope and for two halogen forms (i.e., elemental and or organic). From this, the isotopic concentration airborne in the containment as a function of time and the integrated isotopic leakage from the containment for a given time period can be obtained. Parameters used in the loss-of-coolant accident analysis are listed in Table 15.5-6.

Modeling of Removal Process

For fission products other than iodine, the only removal processes considered are radioactive decay and leakage.

The fission product iodine is assumed to be present in the containment atmosphere in elemental, organic, and particulate form. It is assumed that 91% of the iodine available for leakage from the containment is in elemental (i.e., I_2 vapor) form, 4% is assumed to be in the form of organic iodine compounds (e.g., methyl iodine), and 5% is assumed to be absorbed on airborne particulate matter. In this analysis it was conservatively assumed that the organic form of iodine is not subject to any removal processes other than radioactive decay and leakage from the containment. The elemental and particulate forms of iodine are assumed to behave identically.

The effectiveness of the ice condenser for elemental iodine removal is described in Section 6.5.4. For the calculation of doses, the ice condenser was treated as a time dependent removal process. The time dependent ice condenser iodine removal efficiencies for the Regulatory Guide 1.4 analysis are given in Table 15.5-7.

Ice Condenser

The ice condenser is designed to limit the leakage of airborne activity from the containment in the event of a loss-of-coolant accident. This is accomplished by the removal of heat released to the containment during the accident to the extent necessary to initially maintain that structure below design pressure and then reduce the pressure to near atmospheric. The addition of an alkaline solution such as sodium tetraborate enhances the iodine removal qualities of the melting ice to a point where credit can be assumed in the radiological analyses.

The operation of the containment deck fans (air return fans) is delayed for approximately 10 minutes following a Phase B isolation signal resulting from the loss-of-coolant accident.

This delay in fan operation yields an initial inlet steam-air mixture into the ice condenser of greater than 90% steam by volume which results in more efficient iodine removal by the ice condenser.

As a result of experimental and analytical efforts, the ice condenser system has been proven to be an effective passive system for removing iodine from the containment atmosphere following a loss-of-coolant accident. (Reference 4)

With respect to iodine removal by the ice condenser, the following assumptions were made:

1. The ice condenser is only effective in removing airborne elemental and particulate iodine from the containment atmosphere.

2. The ice condenser is modeled as a time dependent removal process.

3. The ice condenser is no longer effective in removing iodine after all of the ice has been melted using the most conservative assumptions.

Primary Containment Leak Rate

The primary containment leak rate used in the Regulatory Guide 1.4 analysis for the first 24 hours is the design basis leak rate guaranteed in the technical specifications regarding containment leakage and it is 50% of this value for the remainder of the 30 day period. Thus, for the first 24 hours following the accident, the leak rate was assumed to be 0.25% per day and the leak rate was assumed to be 0.125% per day for the remainder of the 30 day period.

15.5-1

The leakage from the primary containment can be grouped into two categories: (1) leakage into the annulus volume and (2) through line leakage to rooms in the auxiliary building (see Figure 15.51). The environmental effects of the core release source events have been analyzed on the basis that 25% of the total primary containment leakage goes to the auxiliary building~~s~~.

The leakage paths to the Auxiliary Building are tested as part of the normal Appendix J testing of all containment penetrations. An upper bound to leakage to the Auxiliary Building was estimated to be 25% of the total containment leakage. Selecting an upper bound is conservative because an increasing leakage fraction to the Auxiliary Building results in an increasing calculated offsite dose. This upper bound was also selected on the basis that it is large enough to be verified by testing. The periodic Appendix J testing will assure that leakage to the Auxiliary Building remains below 25%. The remaining 75% of the leakage goes to the annulus.

Bypass Leakage Paths

There are no bypass paths for primary containment leakage to go directly to the atmosphere without being filtered. For further details see the discussion on Type E leakage paths in Section 6.2.4.3.1.

Auxiliary Building Release Path

The Auxiliary Building allows holdup and is normally ventilated by the auxiliary building ventilation system. However, upon an ABI signal following a loss-of-coolant accident, the normal ventilation systems to all areas of the Auxiliary Building are shutdown and isolated. Upon Auxiliary Building isolation, the auxiliary building gas treatment system (ABGTS) is activated to provide ventilation of the area and filtration of the exhaust to the atmosphere. This system is described in Section 6.2.3.2.3.

Fission products which leak from the primary containment to areas of the auxiliary building are diluted in the room atmosphere and travel via ducts and other rooms to the fuel handling area or the waste packaging area where the suctions for the auxiliary building gas treatment system are located. The mean holdup time for airborne activity in the Auxiliary Building areas other than the fuel handling area is greater than one hour with the Auxiliary Building isolated and both trains of the ABGTS operating. It has been conservatively assumed in the estimation of activity release that activity leaking to the Auxiliary Building is directly released to the environment for

the first four minutes and then through the ABGTS filter system, with a conservatively assumed mean hold-up time of 0.3 hours in the Auxiliary Building before being exhausted. In the Regulatory Guide 1.4 analysis the ABGTS filter system is assumed to have a removal efficiency of 99% for elemental, organic, and particulate iodines.

The Auxiliary Building internal pressure is maintained at less than atmospheric during normal operation (see Section 9.4.2 and 9.4.3), thereby preventing release to the environment without filtration following a LOCA. The annulus pressure is maintained more negative than the Auxiliary Building internal pressure during normal operation and after a DBA. Therefore, any leakage between the two volumes following a LOCA is into the annulus.

Shield Building Releases

The presence of the annulus between the primary containment and the Shield Building reduces the probability of direct leakage from the vessel to the atmosphere and allows holdup, dilution, sizing, and plate-out of fission products in the Shield Building. The major factor in the effectiveness of the secondary containment is its inherent capability to collect the containment leakage for filtration of the radioactive iodine prior to release to the environment. This effect is greatly enhanced by the recirculation feature of the air handling systems, which forces repeated filtration passes for the major fraction of the primary containment leakage before release to the environment. Seventy-five percent of the primary containment leakage is assumed to go to the annulus volume.

The initial pressure in the annulus is less than atmospheric. After blowdown, the annulus pressure will increase rapidly due to expansion of the containment vessel as a result of primary containment atmosphere temperature and pressure increases. The annulus pressure will continue to rise due to heating of the annulus atmosphere by conduction through the containment vessel. After a delay, the EGTS operates to maintain the annulus pressure below atmospheric pressure.

The EGTS is essentially an annulus recirculation system with pressure activated valves which allow part of the system flow to be exhausted to atmosphere to maintain a "negative" annulus pressure. The system includes absolute and impregnated charcoal filters for removal of halogens. The EGTS combined with ABGTS ensures that all primary containment leakage is filtered before release to the atmosphere.

The EGTS suction in the annulus is located at the top of the containment dome, while nearly all penetrations are located near the bottom of the containment (see Section 6.2), thereby minimizing the probability of leakage directly from the primary containment into the EGTS.

Some minor leakage into the ABGTS and EGTS ductwork allows some unfiltered Auxiliary Building air to be released to the environment. This leakage, quantified by testing, is modeled in the LOCA analysis as indicated in Table 15.5-6 and does not significantly impact doses.

In order to evaluate the effectiveness of the shield building ~~under all conceivable conditions~~, the following case was analyzed:

50% Mixing Case

After ~~approximately~~ ~~90~~ 85 seconds following a LOCA, the EGTS starts exhausting filtered fission products to the environs (see Table 15.5-8). All of the primary containment leakage going to the shield building as well as the fission products recirculated by the EGTS is assumed to be uniformly mixed in 50% of the annulus free volume.

Emergency Gas Treatment System Filter Efficiencies

The EGTS takes suction from the annulus, and the exhaust gases are drawn through two banks of impregnated charcoal filters in series. Sufficient filter capacity is provided to contain all iodines, inorganic, organic, and particulate available for leakage. Since the air in the annulus is dry, filter efficiencies of greater than 99% are attainable as reported in ORNL-NSIC-4[6]. ~~Although not required for accident conditions,~~ heaters and demisters have been incorporated upstream of the filters resulting in a relative humidity of less than 70% in the air entering the filters which further ensures high filter efficiency.

In the Regulatory Guide 1.4 analysis however, an overall removal efficiency of 99% for elemental, organic, and particulate iodine is assumed for the two filter banks in series.

Discussion of Results

The gamma, beta, and thyroid doses for the LOCA at the exclusion area boundary and the low population zone are given in Table 15.5-9. These doses are calculated by the FENCDOSE computer code[16]. The doses are based on the atmospheric dilution factors and dose models given in Appendix 15A. The doses for this accident are less than 25 rem whole body, 300 rem beta, and 300 rem thyroid. The doses are well within the 10 CFR 100 guidelines.

Loss of Coolant Accident - Environmental Consequences of Recirculation Loop Leakage

Component leakage in the portion of the emergency core cooling system outside containment during the recirculation phase following a loss of coolant accident could result in offsite exposure. The maximum potential leakage for this equipment is specified is Table 6.3-6. This leakage refers to specified design limits for components and normal leakage is expected to be well below those upper limits. Recirculation starts at ~~30~~ 10 minutes after the loss of coolant accident. At this time the sump temperature is approximately ~~155~~ 160°F (Figure 6.2.1-3). The enthalpy of the sump is approximately ~~120~~ 130 BTU/lb. The enthalpy of saturated liquid at 1.0 atmosphere pressure and 212°F is greater than ~~120~~ 130 BTU/lb. Therefore, there will be no flashing of the leakage from recirculation loop components, and an iodine partition factor of ~~0.01~~ 0.1 is assumed for the total leakage.

is assumed in the analysis to

ice melt

12 is

The analys~~es~~is of the environmental consequences ~~are~~ performed as follows: Core iodine inventory given in Table 15.1-5 is used. The water volume is comprised of water volumes from the reactor coolant system, accumulators, refueling water storage tank, and boron injection tanks. All the noble gases are assumed to escape to the primary containment. ~~No~~ radioactive decay was taken into account in the dose calculation. The major assumptions used in the analysis are listed in Table 15.5-1. The offsite doses at the exclusion area boundary and low population zone for the analysis are given in Table 15.5-13. The atmospheric dilution factors and dose models discussed in Appendix 15A are used in the dose analysis. ~~Added conservatism in the analysis results from not taking credit for holdup and filtration of the radioactive iodine prior to release to the environment via the Auxiliary Building release path~~.

Loss of Coolant Accident - Control Room Operator Doses

In accordance with General Design Criterion 19, the control room ventilation system and shielding have been designed to limit the whole body gamma dose during an accident period to 5 rem, the thyroid dose to 30 rem and the beta skin dose to 30 rem.

The doses to personnel during a post-accident period originate from several different sources. Exposure within the control room may result from airborne radioactive nuclides entering the control room via the ventilation system. In addition, personnel are exposed to direct gamma radiation penetrating the control room walls, floor, and roof from:

1. Radioactivity within the primary containment atmosphere

2. Radioactivity released from containment which may have entered adjacent structures

3. Radioactivity released from containment which passes above the control room roof

Further exposure of control room personnel to radiation may occur during ingress to the control room from the exclusion area boundary and during egress from the control room to the exclusion area boundary.

In the event of a radioactive release incident, the control room is isolated automatically by a safety injection system signal and/or by radiation signal from beta detectors located in the air intake stream common to the air intake ports at either end of the Control Building. These redundant signals are routed to redundant controls which actuate air-operated isolation dampers downstream of the beta detectors. Operation of the emergency pressurizing fans with inline HEPA filters and charcoal adsorbers is also initiated by these signals. Simultaneously, recirculation air is rerouted automatically through the HEPA filters and charcoal adsorbers. Approximately ~~325~~ cfm of

711

outside air, the emergency pressurization air, flows through a duct routed to the emergency recirculation system upstream of the HEPA filters and charcoal adsorbers. This flow of outside air provides the control room with a slight positive pressure relative to the atmosphere outside and to surrounding structures. In addition, the equivalent of 51 cfm of unfiltered outside air enters through the main control room doors and other sources. Isolation dampers located in each intake line may be selectively closed by control room personnel. The selection between the two would be based on the objective of admitting a minimum of airborne activity to the control room via the makeup airflow.

The control room ventilation flow system is shown in Figure 9.4-1.

To evaluate the ability of the control room to meet the requirements of General Design Criterion 19, a time-dependent model of the control room was developed. In this model, the outside air concentration enters the control room via the isolation damper bypass line and the HEPA filters and charcoal absorbers. The concentration in the room is reduced by decay, leakage out, and by recirculation through the HEPA filters and charcoal absorbers. Credit for filtration is taken during two passes through the charcoal absorbers. Using these assumptions, the following equations for the rate of change of the control room concentrations are obtained:

$$\frac{dM}{dt} = C_o\ (1-K_1)\ L/V - L/V\ M - \frac{R_c}{V}\ M - \lambda M \qquad (1)$$

$$\frac{dN}{dt} = \frac{R_c}{V}\ (1-K_2)\ M - L/V\ N - \lambda N \qquad (2)$$

$$C(t) = M(t) + N(t) \qquad (3)$$

Where:

$M(t)$ - Once-filtered time-dependent concentration

$N(t)$ - Twice-filtered (or more) time-dependent concentration

$C(t)$ - Total time-dependent concentration in control room

C_o - Concentration of isotope entering air intake

K_1 - Filter efficiency for a particular isotope during first pass

K_2 - Filter efficiency for a particular isotope during second pass

L - Flow rate of outside air into control room and leakage out of control room

R_c - Recirculated air flow rate through filters

λ - Decay constant

V - Control room free volume

These equations are readily solvable if C_o is constant or a simple function of time during a time interval. Since C_o consists of a number of terms involving exponentials, it was assumed to be constant during particular time intervals corresponding to the average concentration during each interval as described below. Solving equations (1), (2), and (3) yields:

$$C(t) = \left[\frac{(1-K_1)(1-K_2)C_o}{W_m V}\right] \times \left[\frac{L}{(1-K_2)}(1-e^{-W_m t}) + \frac{R_c L}{W_n V}(1-e^{-W_n t}) - L(e^{-W_m t} - e^{-W_n t})\right] \quad (4)$$

Where:

$$W_m = \frac{(L + R_c + \lambda V)}{V}$$

$$W_n = \frac{(L + \lambda V)}{V}$$

The value of C_o used in equation (4) is determined as follows:

$$C_{oi} = (X/Q)_i \left(\frac{\int_{t_i}^{t_{i+1}} R\,dt}{t_{i+1} - t_i}\right) \quad (5)$$

C_{oi} - Average concentration of activity outside control room during ith time period (Ci/m^3)

$(X/Q)_i$ - Atmospheric dilution factor (sec/m^3) during the ith time period

R - Time dependent release rate of activity from containment (Ci/sec)

dilution factors

exhaust

The atmospheric dilution factors were determined using the accumulated meteorological data on wind speed, direction, and duration of occurrence obtained from the Watts Bar plant site applied to a building wake dilution model. The values used are calculated by the Halitsky methodology[8] and are the maximum values for each time period. The worst case is Unit 1 to intake 1. The values used in the analysis are given in Table 15.5-14. The values include average wind direction frequency factors (methodology from Murphy and Campe, ref. 9).

Equation (4) is used to determine the concentration at any time within a time period and upon integrating and dividing by the time interval gives the average concentration during the time interval due to inflow of radioactivity with outside air as shown:

$$\overline{C_i} = \int_0^T \frac{C_i(t)\,dt}{T-0} \qquad (6)$$

These factors are applied for the first 8 hours, at which time it is assumed that the operator selects intake 2 which has more favorable dilution factors.

Where:

T - $t - \tau_{i-1}$ t

t - Time after accident

τ_{i-1} - Time at end of previous time period

Further contributions to the concentration during the time period are due to the concentrations remaining from prior time periods. These contributions are obtained from the following equations:

$$C_{R(i+j)} = M_{R(i+j)} + N_{R(i+j)} \qquad (7)$$

$$\frac{dM_{R(i+j)}}{dt} = (L/V + R_c/V + \lambda)\ M_{R(i+j)} \qquad (8)$$

$$\frac{dN_{R(i+j)}}{dt} = (R_c/V)\ (1-K_2)\ M_{R(i+j)} - (L/V + \lambda)\ N_{R(i+j)} \qquad (9)$$

With initial conditions:

$M_{R(i+j)}(0) = M_{R0(i)} =$ (Once-filtered concentration at end of the ith time period.)

$N_{R(i+j)}(0) = N_{R0(i)} =$ (Twice-filtered, or more, concentration at end of the ith time period.)

Solving equations (8) and (9) and substituting certain initial condition relations, equation (7) becomes:

$$C_{R(i+j)} = C_{RO(i)} e^{-W_N(t-\theta_i)} - M_{RO(i)} K_2 e^{-W_N(t-\theta_i)} - e^{-W_N(t-\theta_i)} \qquad (10)$$

t

Integrating equation (1) for each of the prior time periods gives the contribution from these time periods to the present time period. The average concentration is determined for these contributions using the method of equation (6).

Filter efficiencies of 95% for elemental and particulate iodine and 95% for organic iodine were deemed appropriate for the first filter pass. Since the concentrations of iodine in the main control room are such reduced as a result of this filtration, the efficiencies were reduced for the second pass to 70% for elemental and particulate iodine, and 70% for organic iodine.

To account for the unfiltered inleakage, 51 cfm ~~were~~ added to the makeup flow (L in equation (1)) of ~~325~~ 711 cfm, and the filter factor for the first pass was decreased ~~to an equivalent value of 85% for elemental and particulate iodine, and 85% for organic iodine~~. The filter efficiencies for the second pass are not affected by the unfiltered inleakage.

a bypass leak rate (BPR) of was

by the ratio L/(L+BPR)

The filter efficiency for noble gases was taken as zero for all cases.

The above equations were incorporated into computer program COROD together with appropriate equations for computing gamma dose, beta dose, and inhalation dose using these average nuclide concentrations and time periods. The whole body gamma dose calculation consists of an incremental volume summation of a point kernel over the control room volume. The principal gammas of each isotope are used to compute the dose from each isotope. The dose computations for beta activity was based on a semiinfinite cloud model. Doses to thyroid were based on activity to dose conversion factors. (The equations and various data are given below.) The doses from these calculations are presented in Table 15.5-15. Gamma dose contributions from shine through the control room roof due to the external cloud and from shine through the control room walls from adjacent structures and from containment are computed using an incremental volume summation of a point kernel which includes buildup factors for the concrete shielding. For the calculation of shine through the control room roof, an atmospheric, rectangular volume several thousand feet in height and several control room widths was used. The control room roof is a 2 foot 3-inch-thick concrete slab and is the only shielding considered in this calculation. The average isotope concentrations at the control bay for each time period were used as the source concentrations. For the shine from adjacent structures, the shielding consists of the 3-foot-thick (5 feet in certain areas) control room walls. The doses are calculated similarly to the shine dose through the roof. The average isotope concentrations at the control bay intake for each time period are also used for these calculations.

The shine from the spreading room below the control room is also computed in the same manner as adjacent structures.

Shielding for this computation consists of the 8-inch-thick concrete floor. The summation of the incremental elements is performed over the volume of each room or structure of interest.

In addition to the dose due to shine from surrounding structures and from the passing cloud, the shine from the reactor containment building also contributes to the gamma whole body dose to personnel. This contribution is computed in the same manner as the methods used above. Due to the location of the Auxiliary Building between the Reactor Buildings and the control room and the thicker control room auxiliary building wall near the roof, the minimum ray path through concrete from the containment into the control room below 10 feet above the control floor, is 8 feet. All nuclides released to containment are assumed uniformly distributed and their time-dependent concentrations were used to compute the dose. The dose computed from this source is small.

Several doors penetrate the control room walls, and the dose at these areas would be larger than the doses calculated as described above. The potential shine at these doors and at other penetrations has been evaluated. As a result, hollow steel doors filled with no. 12 lead shot have been incorporated into the design of the shield wall between the control room and the Turbine Building. These doors provide shielding comparable to the concrete walls. Shine through other penetrations was found to be negligible.

Another contribution to the total exposure of control room personnel is the exposure incurred during ingress from and egress to the exclusion area boundary. The doses due to ingress and egress were computed based on the following assumptions:

1. Five minutes are required to leave the control room and arrive at car or vice versa.

2. The distance traveled on the access road to the site exclusion boundary is estimated to be 1500 meters. The average car speed is assumed to be 25 mph.

3. One one-way trip first day, one round-trip/day 2nd through 30th days.

The control room occupancy factors used in this calculation were taken from Murphy and Campe[9]. They are:

100%	occupancy 0-24 hours
60%	occupancy 1-4 days
40%	occupancy 4-30 days.

All atmospheric dilution factors were conservatively based on 5th percentile wind velocity averages.

It was also assumed that initially the makeup air intake would be through the vent admitting the highest radioisotope concentration, but that the main control room personnel would switch intake vents 8 hours after the accident in order to admit a lower amount of airborne activity to the MCR via the makeup air flow.

The whole body, beta, and thyroid doses from the radiation sources discussed above are presented in Table 15.5-15. The dose to whole body is below the GDC 19 limit of 5 rem for control room personnel, and the thyroid dose is below the limit of 30 rem. These LOCA main control room doses are bounding for all ~~other~~ Section 15.5 design-basis events in terms of maximum dose to the control room personnel

Dose Equations, Data, and Assumptions

The dose from gamma radiation originating within the control room is given by:

$$D_\gamma = 1.696 \times 10^4 \sum_{i=1}^{\alpha}\left[\sum_{k=1}^{\beta} TCOT_{ik}\left(\sum_{\ell=1}^{\gamma}\left\{E_{k\ell} f_{k\ell}\left(\frac{\mu_e}{\rho}\right)_{\ell} \sum_{m=1}^{\varepsilon}\sum_{n=1}^{\omega}\sum_{q=1}^{\sigma} \frac{\exp\left(-\mu_{a\ell}\sqrt{x_m^2+y_n^2+z_q^2}\right)}{\left(x_m^2+y_n^2+z_q^2\right)} \cdot \Delta x \Delta y \Delta z\right\}\right)\right] \qquad (11)$$

Where:

D_γ	-	Absorbed dose in flesh in mrads
$TCOT_{ik}$	-	Total concentration integrated over time period i of isotope k in curies/m^3
$E_{k\ell}$	-	Energy of gamma ℓ from isotope k in MeV
$f_{k\ell}$	-	Number of ℓ gammas of isotope k given off per disintegration
$\left(\frac{\mu_e}{\rho}\right)_\ell$	-	Mass attenuation coefficient for flesh determined at the energy of gamma ℓ of isotope k in cm^2/gram
$\mu_{a\ell}$	-	Linear attenuation coefficient for air determined at the energy of gamma ℓ in inverse meters
x,y,z	-	Coordinate distances from the dose point to the source volume element (m,n,q) in meters
$\Delta x, \Delta y, \Delta z$	-	Dimensions of source element (m,n,q)
α	-	Number of time periods
β	-	Number of isotopes
γ	-	Number of gammas from an isotope
ε	-	Number of intervals in the x direction
ω	-	Number of intervals in the y direction
σ	-	Number of intervals in the z direction

The following conservative assumptions and parameters are used to calculate the activity releases and offsite doses for the postulated steamline break.

1. The primary-to-secondary leakage of 1 gpm has remained constant for one year in order to maximize the radionuclide inventory in the secondary side.

2. Primary coolant activity is associated with 1% defective fuel and is determined by multiplying the 0.12% failed fuel values listed in Table 11.1-7 by 8.

3. The iodine partition factor is:

$$\frac{\text{amount of iodine/unit mass steam}}{\text{amount of iodine/unit mass liquid}} = 0.01$$

in the steam generators.

The iodine partition factor is:

$$\frac{\text{amount of iodine/unit volume gas}}{\text{amount of iodine/unit volume liquid}} = 0.01 \text{ (Reference 1)}$$

in the condenser.

4. No noble gas is dissolved or contained in the steam generator water, i.e., all noble gas leakage to the secondary system is continuously released with steam from the steam generator.

5. The blowdown rate from steam generators is continuous at ~~25~~ 100 gpm per steam generator. STET

6. After eight hours following the accident, no steam and activity are released to the environment.

7. No condenser vacuum release during the accident.

8. The 0-2 and 2-8 hour accident atmospheric dilution factors given in Appendix 15A and the 0-8 hour breathing rate of 3.47×10^{-4} m^3/sec are applicable. Doses are based on the dose models presented in Appendix 15A.

The steam releases to the atmosphere for the steam line break are given in Table 15.5-16.

The gamma, beta, and thyroid doses for the steam line break accident at the exclusion area boundary and low population zone are given in Table 15.5-17. The doses from this accident are less than the reference values as listed in 10 CFR 100 (25 rem whole body and 300 rem thyroid).

15.5.5 Environmental Consequences of a Postulated Steam Generator Tube Rupture

Thermal and hydraulic analysis has been performed to determine the plant response for a design basis steam generator tube rupture (SGTR), and to determine the integrated primary to secondary break flow and mass releases from the ruptured and intact steam generators (SGs) to the condenser and the atmosphere (Section 15.4.3). An analysis of the environmental consequences of the postulated SGTR has also been performed, utilizing the reactor coolant mass and secondary steam mass releases determined in the base thermal and hydraulic analysis (See Reference [38] in Section 15.4). Table 15.5-18 summarizes the parameters used in the SGTR analysis.

The SGTR thermal and hydraulic analysis documents use WBN specific parameters and actual operator performance data, as determined from simulator exercises utilizing the appropriate emergency operating procedures (EOPs). The primary side activity release was determined by using maximum Technical Specification (TS) limit design reactor coolant activities assuming 1% failed fuel, and a isotopic spectrum pre-existing iodine spike of a factor of ten. The secondary side releases were determined using expected secondary side activities, based on ANSI/ANS-18.1-1984[14] as modified for WBN, and on a 1 gpm primary-to-secondary-side leakage. Credit was taken for flashing of the primary coolant (References [34] and [35] of Section 15.4), but "scrubbing" of the iodine in the rising steam bubbles by the water in the steam generator was conservatively neglected. A partition factor of 100 was applied to iodine in the remaining unflashed coolant which will boil.

The atmospheric diffusion coefficients (X/Q) for the exclusion area boundary (EAB) and offsite dose determination are the same as those used for the LOCA analysis (Appendix 15A). The X/Q values for the control room operator were determined in the analysis. The LOCA X/Q values were based on release from the shield building vent, whereas the SGTR release is from the top of the main steam valve vault. The methodology for determination of the WBN X/Q was based on Halitsky[8].

The gamma, beta, and thyroid dose for the SGTR event are given in Table 15.5-19. It can be seen that the doses at the EAB and the low population zone were less than 10% of the 10 CFR 100 limits. The control room operator doses from this event were determined to be well below the GDC 19 reference values.

15.5.6 Environmental Consequences of a Postulated Fuel Handling Accident

The analysis of a postulated fuel handling accident is based on Regulatory Guide 1.25[11].

The parameters used for this analysis are listed in Table 15.5-20.

The bases for the Regulatory Guide 1.25 evaluations are:

1. In the Regulatory Guide 1.25 analysis the accident occurs 100 hours after plant shutdown. Radioactive decay of the fission product inventory during the interval between shutdown and placement of the first spent fuel assembly into the spent fuel pit is taken into account.

2. In the Regulatory Guide 1.25 analysis damage was assumed for all rods in one assembly.

3. The assembly damaged is the highest powered assembly in the core region to be discharged. The values for individual fission product inventories in the damaged assembly are calculated assuming full-power operation at the end of core life immediately preceding shutdown. Nuclear core characteristics used in the analysis are given in Table 15.5-21. In the Regulatory Guide 1.25 analysis, a radial peaking factor of 1.65 is used.

4. For the Regulatory Guide 1.25 analysis all of the gap activity in the damaged rods is released to the spent fuel pool and consists of 10% of the total noble gases in the assembly other than Kr-85, 30% of the Kr-85, and 10% of the total radioactive iodine in the rods at the time of the accident.

5. Noble gases released to the spent fuel pool are released through the shield building vent ~~at ground level~~ to the environment.

6. In the Regulatory Guide 1.25 analysis the iodine gap inventory is composed of inorganic species (99.75%) and organic species (0.25%).

7. In the Regulatory Guide 1.25 analysis the spent fuel pool decontamination factors for the inorganic and organic species are 133 and 1, respectively.

8. All iodine escaping from the pool is exhausted to the environment through charcoal filters.

9. A filter efficiency of 99% is used for elemental and organic iodine for the ABGTS filters and 90% for inorganic iodine and 30% organic iodine for the purge air exhaust filters.

10. No credit is taken for natural decay either due to holdup in the Auxiliary Building or after the activity has been released to the atmosphere.

11. The short-term (i.e., 0-2 hour) atmospheric dilution factors at the exclusion area boundary and low population zone given in Table 15A-2 are used. Doses are based on the dose models presented in Appendix 15A.

The thyroid, gamma, and beta doses for FHAs in the Auxiliary and Reactor Buildings are given in Table 15.5-23 for the exclusion area boundary and low population zone. These doses are much less than 300 rem to the thyroid, 25 rem gamma to the whole body, and 100 rem beta and are within 10 CFR 100 guidelines. These doses are calculated by using the computer code FENCDOSE[16].

The ventilation function of the reactor building purge ventilating system (RBPVS) is not a safety-related function. However, the filtration units and associated exhaust ductwork do provide a safety-related filtration path following a fuel-handling accident prior to automatic closure of the associated isolation valves. The RBPVS contains air cleanup units with prefilters, HEPA filters, and 2-inch-thick charcoal adsorbers. This system is similar to the auxiliary building gas treatment system except that the latter is equipped with 4-inch-thick charcoal adsorbers. Anytime fuel handling operations are being carried on inside the primary containment, either the

9.8

containment is isolated or the reactor building purge filtration system is operational. The assumptions listed above are, therefore, applicable to a fuel handling accident inside primary containment except that the assigned filter efficiency is 90% for inorganic iodine and 30% for organic iodine since no relative humidity control is provided. For the Regulatory Guide 1.25 analysis, this results in a thyroid dose at the exclusion area boundary of 42 rem and at the LPZ boundary of 10.1 rem. In these considerations no allowance has been made for possible holdup or mixing in the primary containment or isolation of the primary containment as a result of high radiation signals from monitors in the ventilation systems. Containment isolation can only result in smaller releases to the environment and lower doses. The result of a fuel handling accident inside the primary containment is far below the limits of 10 CFR 100.

42.2

well

15.5.7 Environmental Consequences of a Postulated Rod Ejection Accident

This accident is bounded by the loss-of-coolant accident. See Section 15.5.3 for the loss-of-coolant accident.

REFERENCES

1. Styrikovich, M. A., Martynova, O. I., Katkovska, K. YA., Dubrovski, I. YA., Smrinova, I. N., "Transfer of Iodine from Aqueous Solutions to Saturated Vapor," translated from Atomnaya Energiya, Vol. 17, No. 1, pp. 45-49, July 1964.

2. Regulatory Guides for Water Cooled Nuclear Power Plants, Regulatory Guide 1.24, "Assumptions Used for Evaluating the Potential Radiological Consequences of a Pressurized Water Reactor Gas Storage Tank Failure," Division of Reactor Standards, U.S. Atomic Energy Commission, March 23, 1972.

3. Regulatory Guide 1.4, "Assumptions Used for Evaluating the Potential Radiological Consequences of a Loss of Coolant Accident for Pressurized Water Reactors," Directorate of Regulatory Standards, U.S. Atomic Energy Commission, June 1974.

4. D. D. Malinowski, "Iodine Removal in the Ice Condenser System," WCAP-7426, April 1970.

5. NAA-SR 10100, Conventional Buildings for Reactor Containment.

6. ORNL-NSIC-4, Behavior of Iodine in Reactor Containment Systems, February 1965.

7. Branch Technical Position CSB 6-2, "Control of Combustible Gas Concentrations in Containment Following a Loss-of-Coolant Accident."

8. James Halitsky, Jack Golden, Paul Halpern, and Paul Wu, "Wind Tunnel Tests of Gas Diffusion from a Leak in the Shell of a Nuclear Power Reactor and from a Nearby Stack," New York University College of Engineering Research Division, Department of Meteorology and Oceanography Geophysical Sciences Laboratory, Report No. 63-2, April 1, 1963.

TABLE 15.5-2

(Sheet 1 of 1)

~~OFFSITE~~ DOSES FROM LOSS OF A. C. POWER

Exclusion Area Boundary Dose (Rem)

	Thyroid	Gamma	Beta
Realistic Analysis	3.062 ~~3.047~~ x 10^{-4}	3.063 ~~3.048~~ x 10^{-5}	2.686 ~~2.673~~ x 10^{-5}
Conservative Analysis	~~4.6 x 10^{-2}~~ 2.450 x 10^{-3}	~~1.4 x 10^{-3}~~ 2.450 x 10^{-4}	~~3.5 x 10^{-3}~~ 2.149 x 10^{-4}

Low Population Zone Dose (Rem)

	Thyroid	Gamma	Beta
Realistic Analysis	1.633 ~~1.628~~ x 10^{-4}	1.913 ~~1.901~~ x 10^{-5}	1.832 ~~1.817~~ x 10^{-5}
Conservative Analysis	~~1.9 x 10^{-2}~~ 1.306 x 10^{-3}	~~6.7~~ x 10^{-4} 1.530	~~2.0 x 10^{-3}~~ 1.466 x 10^{-4}

TABLE 15.5-3

(Sheet 1 of 1)

PARAMETERS USED IN WASTE GAS DECAY TANK RUPTURE ANALYSES

	Realistic Analysis	Regulatory Guide 1.24 Analysis
Core thermal power	3565 MWt	3565 MWt
Plant load factor	1.0	1.0
Fuel defects	ANSI/ANS-18.1, 1984	1%
Activity released from GWPs	(1)	See Table 15.5-4
Time of accident	After Tank Fill	Immediately after at end of equilibrium core cycle
Meteorology	See Table 15A-2	See Table 15A-2

(1) Activity based on maximum concentrations of each isotope and actual plant flow rates of the GWPS.

TABLE 15.5-5

(Sheet 1 of 1)

~~OFFSITE~~ DOSES FROM GAS DECAY TANK RUPTURE

Exclusion Area Boundary Dose (Rem)

	Thyroid	Gamma	Beta
Realistic Analysis	1.789 ~~1.78~~ x 10^{-2}	2.755 ~~2.742~~ x 10^{-2}	1.050 ~~1.044~~ x 10^{-1}
Regulatory Guide 1.24 Analysis	~~5.083~~ x 10^{-2} 5.110	~~9.115~~ x 10^{-1} 9.161	~~1.693~~ 1.702

Low Population Zone Dose (Rem)

	Thyroid	Gamma	Beta
Realistic Analysis	4.155 ~~4.273~~ x 10^{-3}	6.399 ~~1.581~~ x 10^{-3}	2.438 ~~2.507~~ x 10^{-2}
Regulatory Guide 1.24 Analysis	~~1.220~~ x 10^{-2} 1.187	~~2.188~~ x 10^{-1} 2.128	~~4.065~~ x 10^{-1} 3.953

TABLE 15.5-6

(Sheet 2 of 3)

PARAMETERS USED IN LOCA ANALYSIS (Cont'd)

	Regulatory Guide 1.4 Analysis
Form of iodine activity in primary containment available for release	
elemental iodine	91%
methyl iodine	4%
particulate iodine	5%
Ice condenser removal efficiency for elemental and particulate iodine	See Table 15.5-7
Primary containment leak rate (volume percent)	0.25% per day (0-24 hours)
	0.125% per day (1-30 days)
Percent of primary containment leakage to auxiliary building	25%
ABGTS filter efficiencies	
elemental iodine	99%
methyl iodine	99%
particulate iodine	99%
Delay time of activity in auxiliary building before ABGTS operation	None
Delay time before filtration credit is taken for the ABGTS	4 min
Mean holdup time in auxiliary building after initial 10 minutes	0.3 hours
ABGTS flow rate	9000 cfm
Leakage from Auxiliary Building to ABGTS downstream HVAC (bypass of filters)	27.88 cfm
Leakage from ABGTS HVAC into Auxiliary Building	8.87 cfm
Leakage from Auxiliary Building into EGTS downstream HVAC (bypass of filters)	10.7 cfm
Leakage from Auxiliary Building to environment due to single failure of ABGTS (from 30 minutes to 34 minutes post LOCA)	9900 cfm (for 4 minutes)

TABLE 15.5-7

(Sheet 1 of 1)

ICE CONDENSER ELEMENTAL AND PARTICULATE IODINE REMOVAL EFFICIENCY[1]

Time Interval Post LOCA (Hours)	Iodine Removal Efficiency
0.0 to 0.156	0.96
0.156 to 0.267	0.76
0.265 to 0.323	0.73
0.323 to 0.489	0.71
0.489 to 0.615	0.60
0.615 to 0.768	0.58
0.768 to 0.824	0.40
0.824 to 720	0.0

(1) The ice condenser removal efficiencies given in the above table are used for the Regulatory Guide 1.4 analysis. The inlet steam/air mixture coming into the ice condenser is greater than 90% steam by volume initially due to the delaying of the operation of the containment deck fans. Without the delay of operation of the deck fans, the amount of steam by volume in the inlet mixture initially would be much lower and the ice condenser iodine removal efficiencies would be reduced.

TABLE 15.5-8

(Sheet 1 of 1)

EMERGENCY GAS TREATMENT SYSTEM FLOW RATES

Time Interval (sec)	Time Interval (hours)	Recirculation Rate cfm	Recirculation Rate cfh	Exhaust Rate cfm	Exhaust Rate cfh
0-30	0-0.00833	0.00	0.00	0.00	0.00
30-90	0.00833-0.025	4000.002	2.40E0+5	0.00	0.00
90-91	0.025-0.0253	3686.62	2.21E+05	313.38	1.88E+04
91-92	0.253-0.0256	2752.31	1.65E+05	1247.69	7.49E+04
92-93	0.0256-0.0258	1704.79	1.02E+05	2295.21	1.38E+05
93-94	0.0258-0.0261	762.60	4.58E+04	3237.40	1.94E-05
94-107	0.0261-0.0297	400.00	2.40E+04	3600.00	2.16E+05
107-108	0.0297-0.03	1366.37	8.20E+04	2633.63	1.58E+05
108-109	0.03-0.0303	1566.86	9.40E+04	2433.14	1.46E+05
109-115	0.0303-0.0319	1528.50	9.17E+04	2471.50	1.48E+05
115-128	0.0319-0.0356	1452.72	8.72E+04	2547.28	1.53E+05
128-145	0.0356-0.0403	1363.92	8.18E+04	2636.08	1.58E+05
145-160	0.0403-0.0444	1304.95	7.83E+04	2695.05	1.62E+05
160-173	0.0444-0.0481	1282.19	7.69E+04	2717.81	1.63E+05
173-190	0.0481-0.0528	1284.69	7.71E+04	2715.31	1.63E+05
190-210	0.0528-0.0583	1314.94	7.89E+04	2685.06	1.61E+05
210-250	0.0583-0.0694	1416.95	8.50E+04	2583.05	1.55E+05
250-290	0.0694-0.0806	1597.04	9.58E+04	2402.96	1.44E+05
290-446	0.0806-0.1239	2108.33	1.26E+05	1891.67	1.14E+05
446-602	0.1239-0.1672	2808.65	1.69E+05	1191.35	7.15E+04
602-603	0.1672-0.1675	3098.98	1.86E+05	901.02	5.41E+04
603-1608	0.1675-0.4467	4000.00	2.40E+05	0.00	0.00E+00
1608-1609	0.4467-0.4469	3922.03	2.35E+05	77.97	4.68E+03
1609-1610	0.4469-0.4472	3849.05	2.31E+05	150.95	9.06E+03
1610-1611	0.4472-0.4475	3838.08	2.30E+05	161.92	9.72E+03
1611-1855	0.4475-0.5153	3810.79	2.29E+05	189.21	1.14E+04
1855-2100	0.5153-0.5833	3774.86	2.26E+05	225.14	1.35E+04
2100-30 days*	0.5833-720	3750.00	2.25E+05	250.00	1.50E+04

* Required to maintain annulus pressure when assuming 250 cfm annulus inleakage.

INSERT DATA FROM ATTACHED CALCULATION PAGE 17 of 22

Table 3
EGTS Flow Rates

Time Interval [sec]	[hours]	Recirculation Rate [cfm]	[cfh]	Exhaust Rate [cfm]	[cfh]
0-30	0-0.00833	0.00	0.00E+00	0.00	0.00E+00
30-84	0.00833-0.0233	3600.00	2.16E+05	0.00	0.00E+00
84-85	0.0233-0.0236	3286.62	1.97E+05	313.38	1.88E+04
85-86	0.0236-0.0238	2352.31	1.41E+05	1247.69	7.49E+04
86-87	0.0238-0.0242	1304.79	7.83E+04	2295.21	1.38E+05
87-88	0.0242-0.0244	362.60	2.18E+04	3237.40	1.94E+05
88-104	0.0244-0.0289	0.00	0.00E+00	3600.00	2.16E+05
104-105	0.0289-0.0292	50.55	3.03E+03	3549.45	2.13E+05
105-106	0.0292-0.0294	1006.42	6.04E+04	2593.58	1.56E+05
106-107	0.0294-0.0297	993.21	5.96E+04	2606.79	1.56E+05
107-120	0.0297-0.0333	931.51	5.59E+04	2668.49	1.60E+05
120-130	0.0333-0.0361	843.72	5.06E+04	2756.28	1.65E+05
130-145	0.0361-0.0403	779.80	4.68E+04	2820.20	1.69E+05
145-160	0.0403-0.0444	732.93	4.40E+04	2867.07	1.72E+05
160-168	0.0444-0.0467	715.86	4.30E+04	2884.14	1.73E+05
168-169	0.0467-0.0469	713.85	4.28E+04	2886.15	1.73E+05
169-190	0.0469-0.0528	724.66	4.35E+04	2875.34	1.73E+05
190-210	0.0528-0.0583	763.89	4.58E+04	2836.11	1.70E+05
210-230	0.0583-0.0639	831.58	4.99E+04	2768.42	1.66E+05
230-250	0.0639-0.0694	919.68	5.52E+04	2680.32	1.61E+05
250-270	0.0694-0.0750	1021.62	6.13E+04	2578.38	1.55E+05
270-446	0.0750-0.1239	1563.59	9.38E+04	2036.41	1.22E+05
446-602	0.1239-0.1672	2357.42	1.41E+05	1242.58	7.46E+04
602-603	0.1672-0.1675	2663.76	1.60E+05	936.24	5.62E+04
603-1607	0.1675-0.4464	3600.00	2.16E+05	0.00	0.00E+00
1607-1608	0.4464-0.4467	3594.46	2.16E+05	5.54	3.32E+02
1608-1609	0.4467-0.4469	3458.91	2.08E+05	141.09	8.47E+03
1609-1610	0.4469-0.4472	3438.76	2.06E+05	161.24	9.67E+03
1610-1611	0.4472-0.4475	3435.54	2.06E+05	164.46	9.87E+03
1611-1612	0.4475-0.4478	3434.81	2.06E+05	165.19	9.91E+03
1612-1855	0.4478-0.5153	3409.64	2.05E+05	190.36	1.14E+04
1855-2100	0.5153-0.5833	3374.31	2.02E+05	225.69	1.35E+04
2100-30days*	0.5833-720	3350.00	2.01E+05	250.00	1.50E+04

R11

*required to maintain annulus pressure when assuming 250 cfm annulus inleakage, ref.19

Note: The annulus exhuast rates from TI-ANL-166 (ref.19) are based on total EGTS flow of 3600 cfm (=4000-10%). This is conservative as it minimizes cleanup of the annulus environment via EGTS filters.

Table 15.5-9

(Sheet 1 of 1)

~~OFFSITE~~ DOSES FROM LOSS-OF-COOLANT ACCIDENT

	2-Hour Exclusion Area Boundary Dose (Rem)		
	Thyroid	Gamma	Beta
Regulatory Guide 1.4 Analysis	~~30.60~~ 34.07	~~2.223~~ 2.253	~~1.220~~ 1.233

	30-Day Low Population Zone Dose (Rem)		
	Thyroid	Gamma	Beta
Regulatory Guide 1.4 Analysis	~~10.41~~ 11.01	~~1.669~~ 1.652	~~1.799~~ 1.791

TABLE 15.5-12

(Sheet 1 of 2)

PARAMETERS USED IN ANALYSIS OF RECIRCULATION LOOP LEAKAGE FOLLOWING A LOCA

	Realistic Analysis	Conservative Analysis	Regulatory Guide 1.4 Analysis
Core thermal power	3565 MWt	3565 MWt	3565 MWt
Recirculation loop water volume			
Reactor coolant system	11,000 ft^3	11,000 ft^3	~~11,000~~ ft^3 11,375
Accumulators	9,000 ft^3	9,000 ft^3	~~9,000~~ ft^3 4,000
Refueling water storage tank	46,700 ft^3	46,700 ft^3	~~46,700~~ ft^3 46,800
~~Boron injection tank~~	900 ft^3	900 ft^3	~~900 ft^3~~ 34,100
Total	67,600 ft^3	67,600 ft^3	~~67,600~~ ft^3 96,275
Activity mixed with recirculation loop water			
Noble gases	0.0	0.0	0.0
Iodines	Inventory in one RCS volume	100% of gap inventory	50% of core inventory
Leakage of ECCS equipment outside containment	See Table 6.3-6	See Table 6.3-6	See Table 6.3-6
Iodine partition factor for leakage	0.01	0.1	0.1

sump

Ice melt

TABLE 15.5-12

(Sheet 2 of 2)

PARAMETERS USED IN ANALYSIS OF RECIRCULATION LOOP LEAKAGE FOLLOWING A LOCA (Cont'd)

	Realistic Analysis	Conservative Analysis	Regulatory Guide 1.4 Analysis
ABGTS filter efficiencies			
elemental iodine	99.9%	99%	99%
methyl iodine	99.9%	99%	99%
particulate iodine	99.97%	99%	99%
Meteorology	See Table 15A-2	See Table 15A-2	See Table 15A-2

TABLE 15.5-13

(Sheet 1 of 1)

~~OUTSIDE~~ DOSES FROM RECIRCULATION LOOP LEAKAGE FOLLOWING A LOCA

	Exclusion Area Boundary Dose (Rem)		
	Thyroid	Gamma	Beta
Exclusion Area Boundary Dose (Rem)	~~1.008~~ 0.2205	~~6.174E-3~~ 0.0284	~~1822E-3~~ 0.0152
Low Population Zone Dose (Rem)	~~.3265~~ 0.1623	~~.01655~~ 0.1581	~~5.843E-3~~ 0.1946

TABLE 15.5-14

(Sheet 1 of 1)

ATMOSPHERIC DILUTION FACTORS AT THE CONTROL BUILDING

Time Period (hr)	Dilution Factor (sec/m^3)	
0-2	3.11 ~~2.87~~ x 10^{-3}	Unit 1, Intake 1
2-8	1.64 x 10^{-3}	" " " "
8-24	8.34 ~~1.34~~ x 10^{-4}	Unit 1, Intake 2
24-96	4.36 ~~9.35~~ x 10^{-4}	" " " "
96-720	1.06 ~~7.30~~ x 10^{-4}	" " " "

The above atmospheric dilution factors have been modified ~~(multiplied)~~ (multiplied) by the following factors (methodology from Murphy and Campe, ref. 9):

0-8hr 1.0
8-24hr 0.75 + F/4
1-4 day 0.5 + F/2
4-30 day F

where F is the annual average wind direction frequency. The values of F are: Unit 1, Intake 1 F = 0.195
Unit 1, Intake 2 F = 0.204

TABLE 15.5-15

(Sheet 1 of 1)

CONTROL ROOM PERSONNEL DOSES FOR DBA LOCA POST-ACCIDENT PERIOD **

Source	Personnel Dose: Whole Body Gamma Dose (rem)*	Personnel Dose: Beta Dose (rem)*	Personnel Dose: Thyroid Dose (rem)*
Control room airborne activity	2.563 ~~3.547~~	21.86 ~~29.29~~	8.94 ~~10.29~~
Shine	0.015~~0~~2	0	0
Ingress-egress	0.0789 ~~0.1464~~	0.1529 ~~0.3261~~	0.2693 ~~0.6341~~
TOTAL	~~3.708~~ 2.657	~~29.62~~ 22.01	~~10.92~~ 9.209

*Includes occupancy factor:

100% occupancy 0-24 hours
60% occupancy 1-4 days
40% occupancy 4-30 days

**Control room LOCA doses are bounding for all ~~other~~ Section 15.5 design basis events.

in terms of maximum dose to main control room personnel

TABLE 15.5-17

(Sheet 1 of 1)

DOSES FROM STEAM LINE BREAK

	Exclusion Area Boundary Dose (Rem)		
	Thyroid	Gamma	Beta
Conservative Analysis	2.202 ~~2.192~~ x 10^{-3}	9.441 ~~9.394~~ x 10^{-5}	6.828 ~~6.795~~ x 10^{-5}

	Low Population Zone Dose (Rem)		
	Thyroid	Gamma	Beta
Conservative Analysis	6.014 ~~6.171~~ x 10^{-4}	2.631 ~~2.699~~ x 10^{-5}	1.866 ~~1.915~~ x 10^{-5}

TABLE 15.5-18

(Sheet 1 of 1)

PARAMETERS USED IN STEAM GENERATOR TUBE RUPTURE ANALYSIS

Primary Side Activity	Technical Specification Limit (Based on Design/1% failed fuel)
Secondary Side Activity	ANSI/ANS-18.1-1984 (Expected levels, 1 gpm leak)
Iodine Spiking Factor	10
Iodine Partition Factor	100
Secondary Side Mass Release (Ruptured Steam Generator)	
0-2 hours	104,300 lbm
2-8 hours	30,700 lbm
Secondary Side Mass Release (Intact Steam Generator)	
0-2 hours	510,600 lbm
2-8 hours	938,400 lbm
Primary Coolant Mass Release (Total)	
0-2 hours	185,500 lbm
Primary Coolant Mass Release (Flashed)	
0-2 hours	9646.4 lbm

Atmospheric diffusion coefficients for Control Room Operator doses

4.07×10^{-3} (0-2 hours)

2.47×10^{-3} (2-8 hours)

TABLE 15.5-19

(Sheet 1 of 1)

~~OFFSITE~~ DOSES FROM STEAM GENERATOR TUBE RUPTURE

	Thyroid (rem)	Gamma (rem)	Beta (rem)
Exclusion Area Boundary	16.~~02~~ 10	0.3732	0.6341
Low Population Zone	3.~~85~~ 74	~~0.09~~ 0.0867	~~0.15~~ 0.1473

ENCLOSURE

FINAL SAFETY ANALYSIS REPORT (FSAR) -
PROPOSED CHANGES FOR AMENDMENT 90

NOTE: The following FSAR pages are attached.

1.2-7
3.1-35
Table 3.2-7 (Sh. 1 of 13)
Table 3.2-7 (Sh. 12 of 13)
Table 3.2-7 (Sh. 13A of 13)
3.3-2
3.5-20
3.7-43
3.7-44
Table 3.8.1-2 (Sh. 1 of 2)
Table 3.8.3-7 (Sh. 1 of 2)
Table 3.8.3-7 (Sh. 2 of 2)
3.8.4-12a
3.8.4-13
3.8.4-14
Table 3.8.4-7 (Sh. 3 of 5)
Table 3.8.4-23 (Sh. 1 of 2)
3.8.6-6
Table 3.9-17 (Sh. 1 of 7)
Table 3.9-17 (Sh. 2 of 7)
Insert, Table 3.9-17 (Sh. 2 of 7)
Table 3.9-17 (Sh. 7 of 7)
Insert, Table 3.9-17 (Sh. 7 of 7)
Table 3.9-25 (Sh. 5 of 14)
Table 3.9-25 (Sh. 6 of 14)
Insert, Table 3.9-25 (Sh. 6 of 14)
Table 3.9-25 (Sh. 7 of 14)
Insert, Table 3.9-25 (Sh. 7 of 14)
Table 3.9-25 (Sh. 14 of 14)
3.10-3
Table 3.10-3 (Sh. 1 of 35)
5.2-57
6.2.3-2
6.2.3-7
6.2.3-8
Insert, 6.2.3-8
6.2.3-18
6.2.3-21
Table 6.2.3-2 (Sh. 2 of 8)
Table 6.2.3-2 (Sh. 5 of 8)
Table 6.2.3-2 (Sh. 8 of 8)
Table 6.2.3-3 (Sh. 1 of 26)
Table 6.2.3-3 (Sh. 2 of 26)
Table 6.2.3-3 (Sh. 3 of 26)
Table 6.2.3-3 (Sh. 4 of 26)
Table 6.2.3-3 (Sh. 24 of 26)
Insert Table 6.2.3-3 (Sh 26 of 26)
6.2.4-10
6.2.4-11
Table 6.2.4-1 (Sh. 8 of 69)
Table 6.2.4-1 (Sh. 9 of 69)
Table 6.2.4-1 (Sh. 12 of 69)
Table 6.2.4-1 (Sh. 14 of 69)
Table 6.2.4-1 (Sh. 51 of 69)
Table 6.2.4-1 (Sh. 38 of 69)
Table 6.2.4-1 (Sh. 39 of 69)
6.2.5-2
6.4-2
6.4-3
6.4-4
6.4-6
6.4-7
Table 6.4-1
Table 6.4-2
6.5-2
6.5-9
Table 6.5-3 (Sh. 1 of 3)
Table 6.5-4 (Sh. 1 of 3)
Table 6.5-4 (Sh. 2 of 3)
Table 6.5-8 (Sh. 1 of 2)
Figure 6.7-38
7.1-6
7.1-12
7.1-13
7.1-14
7.2-25
7.2-26
7.3-9
7.3-10
7.3-12
7.3-13
7.3-15
7.5-13
Table 7.5-2 (Sh. 1 of 17)
Table 7.5-2 (Sh. 15 of 17)
8.2-19
8.2-20
8.3-5
8.3-6
8.3-23
8.3-38
8.3-39
8.3-41

AUG 1 6 1995

cc (Enclosure):

NRC Resident Inspector
Watts Bar Nuclear Plant
Rt. 2, Box 700
Spring City, Tennessee 37381

Mr. P. S. Tam, Senior Project Manager
U.S. Nuclear Regulatory Commission
One White Flint North
11555 Rockville Pike
Rockville, Maryland 20852

U.S. Nuclear Regulatory Commission
Region II
101 Marietta Street, NW, Suite 2900
Atlanta, Georgia 30323

TABLE 15.5-23

(Sheet 1 of 1)

~~OFFSITE~~ DOSES FROM FUEL HANDLING ACCIDENT

Regulatory Guide 1.25 Analysis

DOSES FROM A FUEL HANDLING ACCIDENT (FHA) (rem)

FHA in Auxiliary Building

	Exclusion Area Boundary (EAB)	Low Population Zone (LPZ)
Gamma	~~0.7070~~ 0.7103	~~0.1697~~ 0.1650
Beta	~~2.0409~~ 2.0509	~~0.4899~~ 0.4764
Thyroid	~~1.6814~~ 1.6893	~~0.4036~~ 0.3924

FHA in Reactor Building

	EAB	LPZ
Gamma	~~0.7161~~ 0.7193	~~0.1719~~ 0.1672
Beta	~~2.0472~~ 2.0569	~~0.4914~~ 0.4778
Thyroid	~~42.0349~~ 42.2364	~~10.09~~ 9.811