E13 930706 251

July 6, 1993

R. E. Miller, LP 4H-C

FINAL REPORT - TESTING TO DETERMINE AMPACITY DERATING FACTORS FOR FIRE PROTECTED CABLES FOR WATTS BAR NUCLEAR PLANT - JOB NUMBER 93-0501

Attached is the final report for testing performed to determine the derating factors for conduits coated with Thermo-lag flame retardant material. This work was performed under our Job Number 93-0501.

We hope this information will be of assistance to you and hope that we can be of service to you in the future.

Richard L. Morley, Manager
Central Laboratories Services
PSC 1B-C

WEJ:CLR:SAV
Attachment (E13 930706 252)
cc (Attachment):
RIMS, MR 2F-C

0223T

9307200208 930709
PDR ADOCK 05000390
A PDR

Enclosure 8

E13 930706 252

FINAL REPORT

TESTING TO DETERMINE AMPACITY DERATING FACTORS FOR FIRE PROTECTED CABLES FOR WATTS BAR NUCLEAR PLANT

JOB NUMBER 93-0501

Revision 0

July 6, 1993

C. L. Rutledge
C. L. Rutledge
Project Engineer

F. A. Deviney
F. A. Deviney
Project Engineer

Engineering Supervisor

for W. E. Joly
QA Supervisor

R. L. Morley
Manager, CLSD

FINAL REPORT

REVISION LOG

Job Number 93-0501

Revision Date	Pages Affected	Description of Change	Prepared By	Approved
Rev. 0 07/06/93	All	Initial Issue	C.L.Rutledge	[illegible]

TABLE OF CONTENTS

1.0 SUMMARY

2.0 REFERENCES

3.0 QUALITY ASSURANCE

4.0 RECEIPT INSPECTION

5.0 TEST PREPARATION AND RESULTS

6.0 FINAL INSPECTION

7.0 ATTACHMENTS

7.1 Attachment A - Test Plans
7.2 Attachment B - Log Book
7.3 Attachment C - Summary of Normalized Currents
7.4 Attachment D -Summary of Thermo-lag Installation, Specimen Weight and Circumference
7.5 Attachment E - Raw Data from 3-conductor Testing
7.6 Attachment F - Raw Data from 4-conductor Testing
7.7 Attachment G - Raw Data from 24-Conductor Testing
7.8 Attachment H - Raw Data from 3 Phase Testing
7.9 Attachment I - Summary of Phase Angles and Conduit Temperatures
7.10 Attachment J - Drawing of Test Setup
7.11 Attachment K - Photographs
7.12 Attachment L - Anomalies
7.13 Attachment M - Computer Programs
7.14 Attachment N - Instrument Log

1.0 SUMMARY

The following information was supplied by Corporate Engineering Personnel for incorporation into this Report.

NOTE: NOMENCLATURE FOR THICKNESS OF THERMO-LAG PREFORMED SECTIONS

Thermal Science Incorporated (TSI) is the sole supplier of all Thermo-lag 330 preformed fire barrier sections used by TVA for Ampacity Derating Testing as described in this test report. At the time they were supplied by TSI, the sections were designated as 1/2" and 1/4" sections, denoting their certified minimum thickness. In actuality, the preformed sections were required by TVA to meet the following thickness criteria:

1/2" sections: 5/8" +/- 1/8"
1/4" sections: 3/8" +/- 1/8"

TSI has recently begun describing the preformed sections in their literature as 5/8" and 3/8", denoting their nominal thickness. In order to avoid confusion, TVA will adopt the TSI nomenclature and will use nominal thickness in this report. Certain attachments to the report (e.g. Attachment B - Log Book), were prepared before the nomenclature change and will refer to the minimum Thermo-lag thickness (1/2" and 1/4"). In all such cases, the material nominal thickness is 5/8" and 3/8" respectively.

1.1 Overview

Corporate Engineering (CE) contracted with Central Laboratory Services (CLS) to perform ampacity derating tests for fire protected cable in conduit as described in draft IEEE Standard P848, "Procedure for the Determination of the Ampacity Derating of Fire Protected Cables."

The objective of the testing was to determine the ampacity correction factor for cables which are installed in conduits that have been covered with Thermo-lag fire barrier material. One-inch and four-inch rigid steel conduits were used and each of the following configurations were assembled:

1. Bare conduit

   (2 configurations for both 1-inch and 4-inch conduits)
   93-0501-4 (4") - One 10-foot plus two 5-foot sections)
   93-0501-9 (4") - Two 10-foot sections)
   93-0501-8 (1") - One 10-foot plus two 5-foot sections)
   93-0501-10 (1") - Two 10-foot sections)

2. 5/8-inch Thermo-lag base layer

   93-0501-1 (4") Two 10-foot sections
   93-0501-5 (1") Two 10-foot sections

3. 5/8-inch Thermo-lag base layer with 3/8-inch Upgrade layer

   93-0501-2 (4") Two 10-foot sections
   93-0501-6 (1") Two 10-foot sections

4. 3/8-inch Thermo-lag base layer with 3/8-inch Upgrade layer

   93-0501-3 (4") Two 10-foot sections
   93-0501-7 (1") Two 10-foot sections

Testing consisted of:

1. Placing the cable/conduit assembly in a temperature controlled test chamber
2. Applying current to the cable to raise the temperature of the cable conductors to 90°C.

3. Recording the current required to:

   a. Maintain the cable temperature at 90°C +/- 1.1°C
   b. In a test chamber ambient temperature of 40° C +/-2°C
   c. For a time period of at least 3 hours
   d. During which time the average rate of change of temperature did not exceed +/-0.2°C per hour
   e. And the average temperatures at location #1 and location #3 were within +/- 4°C of the average temperature at location #2 (Attachment J)
   f. In 3 phase tests, maintain the currents in the Red phase and White phase circuits within +/- 1 percent or +/-0.5 ampere of the current in the reference phase (Black phase).

The testing was performed at the Central Laboratories Services (CLS) in Chattanooga, Tennessee. The conduit specimen preparation (installation of Thermo-lag material) began January 22, 1993 and was completed on February 2, 1993. Ampacity derating testing began on March 9, 1993 and was completed on June 22, 1993.

1.2 Results

Table 1.2 - Test Currents and Derating Factors

Specimen Number	3-Conductor Tests	4-Conductor Tests	24-Conductor Tests	3-Phase Tests
93-0501-1:				
Amperes	246.3	450.8	34.3	34.0
ACF1	1.05	1.07	1.07	1.05
ACF2	*	1.04	1.03	1.02
93-0501-2:				
Amperes	228.2	433.5	33.4	33.7
ACF1	0.98	1.03	1.04	1.04
ACF2	*	1.00	1.01	1.01
93-0501-3:				
Amperes	215.0	424.5	33.1	31.7
ACF1	0.92	1.01	1.03	0.98
ACF2	*	0.98	1.00	0.95
93-0501-4:				
Amperes	234.1	420.3	32.1	32.4
93-0501-5:				
Amperes	52.4	59.7	*	64.3
ACF1	0.97	0.98	*	1.00
ACF2	*	*	*	1.03
93-0501-6:				
Amperes	51.9	58.8	*	62.7
ACF1	0.96	0.97	*	0.98
ACF2	*	*	*	1.00
93-0501-7:				
Amperes	52.6	60.2	*	63.6
ACF1	0.97	0.99	*	0.99
ACF2	*	*	*	1.02
93-0501-8:				
Amperes	54.3	60.8	*	64.2
93-0501-9:				
Amperes	*	434.5	33.2	32.4
93-0501-10:				
Amperes	*	*	*	62.6

*Testing was not performed.

Notes:

1. ACF1 is the correction factor relative to a bare conduit of one 10-foot section with two 5-foot sections on each end (Specimens 93-501-4 and 93-0501-8)

2. ACF2 is the correction factor relative to a bare conduit of two 10-foot sections (Specimens 93-501-9 and 93-0501-10)

1.3 Material Tested

1.3.1 Steel Conduit

1-inch and 4-inch rigid steel conduit and couplings

1.3.2 Thermo-lag

Thermo-lag 5/8-inch Base Layer:
3-foot lengths of 5/8-inch preformed sections for use on 1-inch conduit
3-foot lengths of 5/8-inch preformed sections for use on 4-inch conduit

Thermo-lag 3/8-inch Base Layer:
3-foot lengths of 3/8-inch preformed sections for use on 1-inch conduit
3-foot lengths of 3/8-inch preformed sections for use on 4-inch conduit

Thermo-lag 3/8-inch Upgrade Layer:
3-foot lengths of 3/8-inch preformed sections for use on 1-inch conduit with 5/8-inch Base Layer installed
3-foot lengths of 3/8-inch preformed sections for use on 1-inch conduit with 3/8-inch Base Layer installed
3-foot lengths of 3/8-inch preformed sections for use on 4-inch conduit with 5/8-inch Base Layer installed
3-foot lengths of 3/8-inch preformed sections for use on 4-inch conduit with 3/8-inch Base Layer installed

The specimens were prepared by "buttering" trowel grade Thermo-lag on the preformed Thermo-lag pieces on all seams and interior surfaces. Specimens were prepared by Craftsmen provided by Sequoyah Nuclear Plant.

1.3.3 Cable

3/C 6AWG, Rockbestos, 600V, Type PXMJ, Mark WFA-15, XLPE/CSPE, 90NLC-75670A-01

4/C 6AWG, Rockbestos, 600V, Type PXMJ, Mark WFA-19, XLPE/CSPE, 90NLC-75670A-01

1/C 750Kcmil, Rockbestos, 600V, Type PXJ, Mark WDO-1, XLPE/CSPE, 90NLC-75670A-01

1.4 Testing Completed

All sections of the test plan and test plan revisions were completed. A total of 33 configurations were tested.

1.5 Anomalies

Eight anomalies were noted during the testing. All of the anomalies were related to the instrumentation and there was no impact on quality and no impact on reported test results. Reference Attachment L for copies of the anomaly reports.

Anomaly 93-0008 was written to document inconsistent reading obtained during a calibration verification of the current.

RESOLUTION: The laboratory standard was powered from an isolation transformer to eliminate inaccuracy due to distortion of the supply power.

Anomaly 93-0011 was written to document two thermocouples indicating open when the post test calibration was performed.

RESOLUTION: Accept the data obtained using the two thermocouples and do not perform post test check.

Anomaly 93-0013 was written because one thermocouple bead broke during testing.

RESOLUTION: Replace the thermocouple with a spare and continue testing. Accept the data taken using the thermocouple before it broke and do not perform a post test check.

Anomaly 93-0015 was written to document two thermocouples broke when they were removed from the specimens.

RESOLUTION: Do not perform a post-test check. Accept the data acquired before the thermocouple broke.

Anomaly 93-0017 was written to document the out of tolerance condition for the load cell used to weigh the conduits and Thermo-lag.

RESOLUTION: Accept the data taken using this instrument. The load cell was out of tolerance by 0.02 pounds. This was insignificant for the range used.

Anomaly 93-0023 was written to document a calibration check for 70 Amps required due to additional testing requested by the customer. The instrument was originally checked from 20 to 50 Amps .

RESOLUTION: Accept the calibration check for the pre-test calibration and include the 70 Amp Range on the post test calibration.

Anomaly 93-0024 was written to document one thermocouple broken during testing.

RESOLUTION: Do not perform a post-test check. Accept the data acquired before the thermocouple broke.

Anomaly 93-0025 was written to document 3 thermocouples broken during the as found test.

RESOLUTION: Do not perform a post-test check. Accept the data acquired before the thermocouple broke.

2.0 REFERENCES

2.1 CLS-QAP-1.1, "Organization"

2.2 CLS-QAP-4.1, "M & TE Calibration Program"

2.3 CLS-QAP-4.7, "Engineering Services Program"

2.4 Scope of Work Document B44 930108 001

2.5 Revised Scope of Work Document B44 930112 001

2.6 Revised Scope of Work Document B44 930120 002

2.7 Revised Scope of Work Document B44 930212 001

2.8 Revised Scope of Work Document B44 930324 001

2.9 Revised Scope of Work Document B44 930419 004

2.10 Revised Scope of Work Document B44 930524 002

2.11 Revised Scope of Work Document B44 930528 001

2.12 Revised Scope of Work Document B44 930610 003

3.0 QUALITY ASSURANCE

3.1 Test Equipment

All test equipment and instrumentation used in the performance of this test program was calibrated in accordance with applicable standards and QA procedures and conformed to applicable portions of ANSI N 45.2 and 10 CFR 50 Appendix B except the moisture meter used to measure the Thermo-lag moisture content. Standards used in performing all calibrations are traceable to the National Institute of Standards and Technology (NIST), natural physical constants, or commercially accepted practices.

3.2 Personnel and Procedures

All personnel, procedures, and instructions used in the performance of this test program complied with the applicable requirements of the Central Laboratories Services (CLS) Quality Assurance Program.

4.0 RECEIPT INSPECTION

4.1 Inspection

The materials (conduit, cable, Thermo-lag components, etc.) were inspected prior to assembly of the test items. Visual inspection of conduit and cable was performed. Visual inspection of Thermo-lag sections and Thermo-lag trowel grade material was performed. Measurements of the physical dimensions of Thermo-lag sections were made.

4.2 Tagging

After assembly, ten test specimens were tagged 93-0501-1 through 93-0501-10. The tag was attached to the conduit section used for testing.

93-0501-1	4-inch conduit with 5/8-inch Thermo-lag base layer
93-0501-2	4-inch conduit with 5/8-inch Thermo-lag base layer and 3/8-inch upgrade layer
93-0501-3	4-inch conduit with 3/8-inch Thermo-lag base layer and 3/8-inch upgrade layer
93-0501-4	4-inch conduit bare (One 10-foot section with a 5-foot section on each end)
93-0501-5	1-inch conduit with 5/8-inch Thermo-lag base layer
93-0501-6	1-inch conduit with 5/8-inch Thermo-lag base layer and 3/8-inch upgrade layer
93-0501-7	1-inch conduit with 3/8-inch Thermo-lag base layer and 3/8-inch upgrade layer
93-0501-8	1-inch conduit bare (One 10-foot section with a 5-foot section on each end)
93-0501-9	4-inch conduit bare (Two 10-foot sections)
93-0501-10	1-inch conduit bare (Two 10-foot sections)

5.0 TEST PREPARATION AND RESULTS

5.1 General

Initial tests were performed using cable specimens with 3 conductors installed in the conduit as specified in IEEE P848. For the initial tests and for subsequent tests, individual sections of cable which were connected in series, were connected using crimped lugs and bolts. The cable length was, typically 3 to 4 feet longer than the 20-foot conduit and the bolted connection were made outside the conduit. The external portions of the cable were wrapped in thermal insulation to minimize heat loss from the conduit ends.

After completion of the initial tests, Corporate Engineering requested testing of several additional cable specimen configurations in the conduit/Thermo-lag assemblies used in the 3 conductor tests. Specifically, testing was performed for:

1. Cable specimens with 4 conductors connected in series
2. Cable specimens with 24 conductors (8, 3-conductor cables) with all 24 conductors connected in series (4-inch conduit only)
3. Cable specimens with 24 conductors (8, 3-conductor cables) with the individual conductors arranged in a series-parallel configuration (3 sets of 8 conductors in series) and connected to a 3 phase, 60 Hertz, current source. (4-inch conduit only)
4. Cable specimens with 3 conductors connected to a 3 phase, 60 Hertz, current source. (1-inch conduit only)

5.2 Initial Setup

5.2.1 Eight conduit test specimens were initially assembled. Six specimens were prepared with the Thermo-lag configurations listed in section 4.1 and one bare 1-inch conduit and one bare 4-inch conduit were assembled.

5.2.2 The specimens coated with Thermo-lag cured for 30 days. Reference Attachment D for a copy of the installation procedure.

5.2.3 After curing, the specimens were weighed. The results are summarized in Attachment D, page D-1.

5.2.4 The circumference of the specimens were measured. The results are summarized in Attachment D, page D-1.

5.2.5 A test chamber was fabricated to provide a temperature controlled environment for the test. The test chamber was constructed using 2-inch by 4-inch studs with two layers of 3/4-inch insulating fiberboard. The room dimensions were 28 feet long by 8 feet high by 8 feet wide. Two 36 inches wide by 40 inches high by 24 inches deep frames were fabricated to support the test specimen in the chamber. The top of each frame was covered with 5/8-inch plywood and 2 inch by 4-inch studs were used to support the test specimen and minimize the surface contact with the support structure. The test specimen was 43 inches above the chamber floor, 44 inches from the side walls, 50 inches from the ceiling, and 48 inches from the end walls.

During tests, the temperature in the room was maintained at 40°C +/-2°C using eight resistive heaters installed along the floor of the room. An autotransformer was used to control the voltage to the heaters which controlled the room temperature. Reference Attachment J, page J-4.

5.3 Cable Specimen Setup

5.3.1 Cable specimens for the initial tests and all subsequent tests were instrumented with thermocouples in three locations arranged so that, when installed in the conduit, one location aligned with the conduit midpoint. The other locations were three feet on either side of the midpoint. Thermocouples were installed using the following technique:

1. Cut a flap in the jacket to expose the insulated conductor(s)
2. Cut a flap in the insulation to expose the wire strands
3. Embed the thermocouple between the strands
4. Reclose the insulation flap and seal with a single layer of glass tape
5. Reclose the jacket flap and seal with a single layer of glass tape

The individual conductors of 1/C 750 Kcmil cable were banded together with stainless steel bands to simulate 3-conductor and 4-conductor cable.

5.4 Three Conductor Single Phase Test

5.4.1 Series connected, 3-conductor cables were used for the initial tests in accordance with the original test plan. A 3-conductor, 6 AWG cable was used for the 1-inch conduit tests and three, 1/C 750 Kcmil cables were used for the 4-inch conduit tests. The series connected, 3-conductor cable test assembly was inserted into the bare 20-foot conduit (two, 10-foot sections coupled

together). The bare 1-inch conduit with the 3-conductor, 6AWG cable installed was the first item tested. The cable was energized, and the conductor temperatures were monitored. The average temperatures at locations #1 and #3 varied by more than +/- 4°C from the average temperature at location #2 (midpoint). An investigation was conducted to determine the cause. Reference Attachment B - Log Book, pages B-17 through B-19. As a result of the investigation, it was concluded that induced currents in the conduit generated heating in the conduit sections which, due to physical differences in the conduit sections, caused the temperature imbalance. To minimize the effect, a bare, 1-inch conduit was assembled with a 10- foot center section and a 5-foot section on each end. The 5-foot sections were fabricated from a single 10-foot section. The configuration corrected the imbalance in the temperatures at the thermocouple locations; that is, during subsequent tests the temperatures at locations #1 and #3 were within +/- 4°C of the average temperature at location #2.

5.4.2 Each conduit/Thermo-lag configuration was tested using a 3-conductor, series connected test assembly in 1-inch and 4-inch conduits. A total of eight tests were performed during this portion of the testing. Reference Attachment C, pages C-1 and C-2, for a summary of results.

5.5 Four Conductor Single Phase Test

5.5.1 Each conduit/Thermo-lag configuration was tested using a 4-conductor, series connected test assembly in 1-inch and 4-inch conduits. A total of nine tests were performed during this portion of the testing. Reference Attachment C, pages C-1 and C-2, for a summary of results.

5.5.2 The results of the 4-conductor tests indicate that, due to reduced conduit heating, the magnitude of the test current for the 4-conductor test was significantly higher than for the 3-conductor test in both 1-inch and 4-inch conduit.

5.6 Twenty four Conductor Single Phase Test

5.6.1 Eight, 3-conductor, 6 AWG, cables were assembled as follows:

(The individual conductors were color coded; white, black, and red.)

1. The individual conductors (red, white and black) were sorted by color and connected in series, white to white, black to black and red to red.

2. The cables were then connected to form a series circuit of 24 conductors.

3. Each of the black conductors was instrumented with thermocouples at each of the three locations. This resulted in a total of twenty four thermocouples (8 thermocouples at each location). During a test, the current was set so that the highest of the 8 measured temperatures at location #2 was 90°C +/-1.1°C.

5.6.2 A total of six tests were performed using the configurations of 4-inch conduit. Reference Attachment C, page C-1 for a summary of results.

5.7 Three Phase Test

5.7.1 The test specimen described in Section 5.6.1 (8, 3-conductor, 6AWG cables) was used for the three phase test in 4-inch conduit. The test cable was configured as follows:

1. The red conductors were connected in series and powered with one phase of the power supply,

2. The white conductors were connected in series and powered with a second phase of the power supply,

3. The black conductors were connected in series and powered by a third phase of the power supply.

The temperature in each of the eight black conductors was monitored at three locations. The current was set so that the highest single temperature of the eight black conductors at location two was 90°C +/-1.1°C. The currents for the red and white conductors were set to be within +/-1% or 0.5 ampere of the black conductor current, whichever was greater. The three currents were averaged to obtain the normalized current.

5.7.2 One, 3-conductor, 6 AWG test specimen was used for the three phase test in 1-inch conduit. Thermocouples were installed in each conductor at three locations. The specimen was configured with the each conductor connected to a power supply. The current was set to achieve 90°C +/-1.1°C in the black conductor at location #2 for all tests. The currents for the red and white conductors were set to be equal to the current in the black conductor +/-1% or 0.5 ampere, whichever was greater. The three currents were averaged to obtain the normalized current.

5.7.3 A total of ten tests were performed during this portion of the testing. Reference Attachment C, pages C1 and C2, for a summary of results.

5.8 Moisture Measurement

Moisture measurements of the Thermo-lag material were made at the end of the 30-day curing period and before and after each test for each specimen tested. All measurements made indicated zero percent moisture content. Test results are included in the Log Book.

5.9 Surface Temperature

Measurement of the temperature of the external surface (bare and coated conduit) were taken to provide additional information pertaining to the thermal characteristics of the test specimen. The thermocouples were mounted on the top surface in the approximate vicinity of the thermocouples located internally at location #1 and location #3. The surface temperatures are not included in the printed test record but are included in the diskette records. In each record, the surface temperatures are assigned to the data logger channels 43 and 44 and associated with location #1 and location #3, respectively. A summary of the results of the surface temperature measurements is included in Attachment I.

5.10 Emissivity

Measurements of the emissivity of the external surfaces were taken to obtain additional information pertaining to the thermal characteristics of the test specimens. The following procedure was used to determine the emissivity value:

1. The surface temperature of the test specimen was measured using a certified thermocouple.

2. A Mikron Infrared Thermometer, Model M56 was used to measure the temperature of the test specimen. The emissivity control knob was adjusted so the Mikron indicated the same temperature indicated by the thermocouples.

3. The emissivity was recorded in the log book.

   The primary function of the Infrared Thermometer is to measure temperature and not to determine emissivity factors. The measurements were erratic and not repeatable and, therefore, the test results are inconclusive and the data is of minimum value.

5.11 Phase Angle

The initial tests indicated that the burden on the current source was reactive and measurements were made to determine the electrical characteristics of the test assemblies. The inductive reactance of the 750 Kcmil cable is typically higher than the cable resistance at 60 Hertz, and a measurement of current source output voltage and current alone is not sufficient for determination of the power dissipated in the test cable.

The reactance of the 6 AWG cable is low relative to the cable resistance and measurement of the current source and voltage, and current is sufficient for determination of the power dissipated in the test cable.

The results of the measurements are for information only and are recorded in the Log Book and included in Attachment I.

6.0 FINAL INSPECTION

All of the specimens (conduit and Thermo-lag) were intact. Several of the specimens had hairline cracks in the Thermo-lag. The cracks noted appear at or near the midpoint of the test specimen, extend approximately one-half way around the circumference, and appear to be at a seam between two Thermo-lag sections. It is likely that these cracks developed during storage between testing and during handling of the test samples. At these times, the samples were not supported at their midpoint. The test specimens were not dissected; however, the cracks do not appear to extend to the conduit outer surface. Typically, the cracks are less than 1/64th inch at the widest points. There is no evidence that the cracks had any effect on the test results.

7.0 ATTACHMENTS

7.1 Attachment A - Test Plans

7.2 Attachment B - Log Book

7.3 Attachment C - Summary of Normalized Currents

7.4 Attachment D - Summary of Thermo-lag Installation, Specimen Weight and Circumference

7.5	Attachment E - Raw Data from 3-conductor Testing
7.6	Attachment F - Raw Data from 4-conductor Testing
7.7	Attachment G - Raw Data from 24-Conductor Testing
7.8	Attachment H - Raw Data from 3 Phase Testing
7.9	Attachment I - Summary of Phase Angles and Conduit Temperatures
7.10	Attachment J - Drawing of Test Setup
7.11	Attachment K - Photographs
7.12	Attachment L - Anomalies
7.13	Attachment M - Computer Programs
7.14	Attachment N - Instrument Log

0223T

ATTACHMENT A

TEST PLAN

TEST PLAN

WATTS BAR NUCLEAR PLANT
TESTING TO DETERMINE AMPACITY DERATING
FACTORS FOR FIRE PROTECTED CABLES

JOB NUMBER 93-0501

Revision 5

June 10, 1993

C. L. Rutledge
C. L. Rutledge
Project Engineer

Engineering Services
Section

Walter E. Joly
W. E. Joly
QA Supervisor

Customer Approval

TEST PLAN

REVISION LOG

Job Number 93-0501

Revision Date	Pages Affected	Description of Change	Prepared By	Approved
Rev. 0 03/02/93	All	Initial Issue	C.L.Rutledge	
Rev. 1 03/09/93	2	Section 5.1.1 Revised description of	C.L.Rutledge	
		test specimen		
		Section 5.1.2 Removed "and couplings"		
	3	Section 5.3.5 Revised description of		
		thermocouple locations		
	4	5.3.11 Add "1"		
	A-2	Revised drawing		
Rev. 2 03/22/93	5	Added Section 5.4	C.L.Rutledge	
	A-1	Added note		
	A-2	Revised drawing		
	C-47	Added item 10		
Rev. 3 04/22/93	5	Added Section 5.5	C.L.Rutledge	
	A-1	Revised drawing		
	A-2	Revised drawing		
	B-1	Revised description		
Rev. 4 05/24/93	6 and 7	Added Section 5.6	C.L.Rutledge	
	A-1	Revised drawing		
	A-2	Revised drawing		
	C-48	Exception 10 revised		
Rev. 5 06/10/93	4	Section 5.3.11 Moved ± from line 3	C.L.Rutledge	
		to line 4		

TEST PLAN

REVISION LOG
(Continued)
Job Number 93-0501

Revision Date	Pages Affected	Description of Change	Prepared By	Approved
Rev. 5 06/10/93	4	Section 5.3.12 Changed ± 2°C to	C.L.Rutledge	
		± 0.2°C Reference NCR 93058		
	7 and 8	Added Section 5.7		

TABLE OF CONTENTS

1.0 Scope

2.0 References

3.0 Quality Assurance

4.0 Receipt Inspection

5.0 Test Procedure

6.0 Report

7.0 Attachments

1.0 SCOPE

The scope of this test is to perform ampacity derating testing for eight configurations of cable and conduit. Four one-inch and four four-inch conduits with various cable configurations will be tested. The testing will be conducted in a temperature stable enclosure and the enclosure temperature, conductor temperature and current will be measured and recorded. This testing will be performed in accordance with P848 Draft 11. Reference Attachment C, pages C-1 through C-45 for a copy of the standards (drafts 11 and 12) and Attachment C, page C-46 and C-47 for a list of the exceptions to draft 11 of this proposed standard.

2.0 REFERENCES

2.1 CLS-QAP-1.1 "Organization"

2.2 CLS-QAP-4.1 "M & TE Calibration Program"

2.3 CLS-QAP-4.7 "Engineering Services Program"

2.4 ANSI N45.2-1971 "Test Control"

2.5 10 CFR 50 Appendix B "Quality Assurance Criteria for Nuclear Power Plants"

3.0 QUALITY ASSURANCE

3.1 Test Equipment

All test equipment and instrumentation to be used in the performance of this test program shall be calibrated in accordance with applicable standards and QA procedures and will conform to applicable portions of ANSI N45.2 and 10 CFR 50 Appendix B except the moisture meter described in Steps 5.3.3 and 5.3.14. Standards used in performing all calibrations are traceable to the National Institute of Standards and Technology (NIST), natural physical constants, or commercially accepted practices.

3.2 Personnel and Procedures

All personnel, procedures, and instructions used in the performance of this test program shall comply with the applicable requirements of the Central Laboratories Services Department (CLSD) Quality Assurance Program.

4.0 RECEIPT INSPECTION

4.1 Tagging

Each conduit configuration shall have a tag attached for identification. The tag shall bear a unique number with the following format, XX-YYYY-Z where XX- YYYY is the job number and Z denotes the individual test sample. All data associated with the conduit configuration will be identified by this number.

4.2 Inspection

The conduit and cable will be inspected to ensure they are free from any physical defects that will prevent testing from being performed.

5.0 TEST PROCEDURE

5.1 Preparation of Test Specimens

5.1.1 Four 20-foot conduit test sections each for one-inch and four-inch conduits will be prepared.

5.1.2 Weigh a minimum of one 20-foot section of each one-inch and four-inch conduit to obtain an approximate weight of the conduit.

5.1.3 Measure the circumference of one of the four-inch and one of the one-inch conduits. This will be used to calculate the thickness of the Thermolag and Thermolag with upgrade after it has been applied to the conduit.

5.1.4 Each section of conduit shall be supported 60 inches from each end and shall be thermally isolated from the conduit. This shall be accomplished by installing a mineral fiber blanket and/or blocks of wood to form a thermal break.

5.1.5 Each of the following configurations will be prepared.

1) One-inch conduit with no Thermolag (baseline)
2) One-inch conduit with 1/2-inch Thermolag
3) One-inch conduit with 1/2-inch Thermolag and 1/4 inch upgrade
4) One-inch conduit with 1/4-inch Thermolag and 1/4-inch upgrade
5) Four-inch conduit with no Thermolag (baseline)
6) Four-inch conduit with 1/2-inch Thermolag
7) Four-inch conduit with 1/2-inch Thermolag and 1/4-inch upgrade
8) Four-inch conduit with 1/4-inch Thermolag and 1/4-inch upgrade

TVA Nuclear Engineering will supply personnel to assemble these test configurations.

5.2 Preparation of the Test Facility

5.2.1 An enclosure shall be constructed so that the temperature around the specimen shall be controlled at the test temperature of 40°C ± 2°C. Some induced air movement within the enclosure is necessary to achieve uniform steady-state temperatures, but care will be taken to avoid direct air currents against the test specimens. Method of ambient temperature control within the test enclosure is important and care will be taken to avoid any additional heat loading on the cables by radiation from heat sources.

5.2.2 The temperature inside the enclosure shall be measured at no less than three places one foot from the specimen and in the horizontal plane of the test specimen. The temperature of the enclosure will be taken as the average of the steady state measurements.

5.3 Test Procedure

5.3.1 Weigh the conduit and Thermolag configurations. Record the information in the log book.

5.3.2 Measure the Thermolag circumference at 20 places along the length of each conduit and average the data. Using the baseline measurement, calculate the Thermolag thickness. Record the information in the log book.

5.3.3 Measure the moisture content of the Thermolag using a hand held moisture meter. Measurements will be taken on the top and bottom exterior of the conduit at the midsection. This measurement shall be made a minimum of two times. The first measurement shall be at least 24 hours prior to beginning the test and the second measurement shall be within four hours of beginning the testing. The moisture instrument is not traceable to NIST.

5.3.4 One three conductor #6 AWG shall be prepared for the one-inch conduits and single conductor 750 KCM copper cables shall be prepared to simulate a three conductor cable for the four-inch conduits. The same prepared cables will be used for testing each configuration of conduit and Thermolag.

5.3.5 Thermocouples with be installed in three locations as shown in Attachment A, page A-2. The outer jacket will be split or a flap cut, and the inner insulation for each of the conductors will be split or a flap cut. The thermojunction for the thermocouple (24 gage, Type T with an accuracy of ± 0.5°C) will be inserted into the strands of each of the three conductors. The slit/flap will be resealed with a single layer of spiral wrap of electrical tape. This configuration will have a total of nine thermocouples for each test specimen. The thermocouple lead wires shall be bundled in the center of the three 750 mcm conductors. The cable and thermocouples shall be tied with tape or stainless steel bands every two feet.

5.3.6 The cables with the thermocouples installed shall be pulled into place in the conduit.

5.3.7 The cables shall be connected as a single series electrical circuit, which contains all conductors in the system.

5.3.8 The cables which penetrate the end of the conduit shall be wrapped with thermal insulation. Electrically heated tape may be used to allow the end of the cable to be adjusted to keep the two outer thermocouples within 4°C of the center.

5.3.9 Seal the ends of the conduit with insulation material.

5.3.10 The circuit shall be energized with 60 Hz, single phase alternating current sufficient to reach a steady-state temperature of 90°C at the hottest single point monitored at location two. (Reference Attachment A, page A-2.) The current values measured shall be reported to the nearest 0.1 ampere, and will be accurate to ± 1% of reading.

5.3.11 The temperature measurements will be recorded on a data logger and at intervals no greater than 1 minute. The current in each test circuit shall be adjusted to achieve a hot spot conductor temperature of 90°C ± 1.1°C at location #2. The average temperatures at locations #1 and #3 shall be within ± 4°C of the average temperature readings at location #2. REV 5

5.3.12 The system will be considered to be in steady state condition when a three-hour period has elapsed since any perturbation of the system occurred (current adjustment, box temperature change, additional insulation placed on ends, etc.) and the rate of change of the average of all monitored conductor temperatures in that circuitry does not exceed ± 0.2°C. Readjustment of the current flow to a circuit in order to maintain a given amperage value is not to be considered a perturbation. REV 5

5.3.13 In order to statistically assure thermal equilibrium, the conductor temperature will be averaged at each sampling period and a linear regression analysis performed on the data obtained from that and all other averages taken of the preceding 60-minute period. The slope of the line will be in °C/hour. As soon as the absolute value of the slope of these data becomes less than 0.2, equilibrium has been reached. Reference Attachment B for a detailed procedure for performing this analysis. This will be performed using computerized data retrieval and analysis. (Reference Attachment A, page A-1 for test setup.)

5.3.14 Measure the moisture content of the Thermolag using a hand held moisture meter. Measurements will be taken on the top and bottom exterior of the conduit at the midsection. This measurement shall be made within four hours of completing the test. The moisture instrument is not traceable to NIST.

5.4 Four Conductor Test Procedure

NOTE: This testing is performed due to inconsistent results obtained during the three conductor cable test. All test results for the three conductor test and four conductor test will be reported in the final report.

5.4.1 Prepare one four conductor #6 AWG for the one-inch conduits and single conductor 750 KCM copper cables shall be prepared to simulate a four conductor cable for the four-inch conduits. The same prepared cables will be used for testing each configuration of conduit and Thermolag.

5.4.2 Thermocouples will be installed in three locations as shown in Attachment A, page A-2. The outer jacket will be split or a flap cut, and the inner insulation for each of the conductors will be split or a flap cut. The thermojunction for the thermocouple (24 gage, Type T with an accuracy of ± .5°C) will be inserted into the strands of each of the four conductors. The slit/flap will be resealed with a single layer of spiral wrap of electrical tape. This configuration will have a total of twelve thermocouples for each test specimen. The thermocouple lead wires shall be bundled in the center of the four 750 mcm conductors. The cable and thermocouples shall be tied with tape or stainless steel bands every two feet.

5.4.3 Repeat steps 5.3.3 and 5.3.6 through 5.3.14 for each configuration of cable and conduit.

5.5 Twenty-four Conductor in Four-inch Conduit Test Procedure

NOTE: This testing is performed due to inconsistent results obtained during the three and four conductor cable test in the four inch conduit. All test results for the three conductor, four conductor, and twenty-four conductor tests will be reported in the final report.

5.5.1 Prepare eight three conductor 6 AWG sections of cable.

5.5.2 Connect the 24 individual conductors end to end so that they are series connected.

5.5.3 Install thermocouples in three locations as shown in Attachment A, page A-2. The thermocouples will be installed in the black conductors at each of the locations. The outer jacket will be split or a flap cut, and the inner insulation for each of the conductors will be split or a flap cut. The thermojunction for the thermocouple (24 gage, Type T with an accuracy of ± .5°C) will be inserted into the strands of each of the eight conductors monitored. The slit/flap will be resealed with a single layer of spiral wrap of electrical tape. There will be eight thermocouples at each location for a total of twenty-four thermocouples.

5.5.4 Repeat steps 5.3.3 and 5.3.6 through 5.3.14 for each configuration of four-inch conduit.

5.6 Eight 3/Conductor, three phase in Four-inch Conduit Test Procedure

NOTE: This testing is performed to verify results obtained during three, four, and twenty-four conductor single phase testing are applicable to three-phase testing. All test results for the three conductor, four conductor, and twenty-four conductor single-phase tests and the eight 3/conductor three-phase test will be documented in the final report.

5.6.1 Connect eight 3/conductor 6 AWG as described below:

a. Eight black conductors connected in series and connected to a current source.

b. Eight red conductors connected in series and connected to a second current source.

c. Eight white conductors connected in series and connected to a third current source.

5.6.2 Install thermocouples in three locations as shown in Attachment A, page A-2. The thermocouples will be installed in the black conductors at each of the locations. The outer jacket will be split or a flap cut, and the inner insulation for each of the conductors will be split or a flap cut. The thermojunction for the thermocouple (24 gage, Type T with an accuracy of ± .5°C) will be inserted into the strands of each of the eight conductors monitored. The slit/flap will be resealed with a single layer of spiral wrap of electrical tape. There will be eight thermocouples at each location for a total of twenty-four thermocouples.

5.6.3 Repeat steps 5.3.3 and 5.3.6 through 5.3.14 for each configuration of four-inch conduits. Two configurations of bare conduit will be tested. This will yield a total of five additional tests.

5.6.4 During testing, the magnitude of the currents in the red and white conductors shall be within ± 1 percent of the current in the black conductor or ± 0.5 amps, whichever is greater. Once equilibrium has been achieved, the measured current in each of the three phases shall be averaged together to obtain one current value. This average current value will be used in the equation in Attachment C, page C-42, as the test current at equilibrium to calculate the normalized current.

5.6.5 In addition, to current and temperature measurements presently specified in the test plan the following parameters shall be measured and documented in the final report:

1. External (surface) temperature of each test sample, measured on top of the sample and in two locations. This measurement will be made at least once after the three-hour run has been started but does not have to be measured throughout the entire three-hour run.

2. Representative measurement of current, voltage, and phase angle for each test will be made. This may be performed before or after the three-hour test run has been performed. The above measurements will be included in the final report for previous testing where the data is available.

5.7 <u>3 Conductor, Three Phase in One-inch Conduit Test Procedure</u>

NOTE: The test results for all single phase and three phase testing performed as part of this test plan will be documented in the final report.

5.7.1 Connect a 3/conductor 6AWG cable as described below:

Connect each of the conductors to a current source. This will yield a total of three current sources.

5.7.2 Install thermocouples in three locations as shown in Attachment A, page A-2. The thermocouples will be installed in each of the conductors at each of the locations. The outer jacket will be split or a flap cut, and the inner insulation for each of the conductors will be split or a flap cut. The thermojunction for the thermocouple (24 gage, Type T with an accuracy of ± 0.5°C) will be inserted into the strands of each of the three conductors. The slit/flap will be resealed with a single layer of spiral wrap of electrical tape. This configuration will have a total of nine thermocouples for the test specimen. REV 5

5.7.3 The cable with the thermocouples installed shall be pulled into place in the conduit.

5.7.4 The cable shall be wrapped with thermal insulation where it penetrates the end of the conduit. Electrically heated tape may be used to allow the end of the cable to be adjusted to keep the two outer thermocouples with ± 4°C of the center.

5.7.5 Seal the ends of the conduit with insulation material.

5.7.6 Measure the moisture content of the Thermolag using a hand held moisture meter. Measurements will be taken on the top and bottom exterior of the conduit at the midsection. This measurement shall be made within four hours of beginning the test. The moisture instrument is not traceable to NIST.

5.7.7 Energize the circuit with 60 Hz, three phase alternating current sufficient to reach a steady-state temperature of 90°C ± 1.1°C in the black conductor at location # 2. The average temperatures at locations #1 and #3 shall be with ± 4°C of the average temperature reading at location #2.

5.7.8 The test period will be when a three-hour period has elapsed since any perturbation of the system occurred (current adjustment, box temperature change, additional insulation placed on ends, etc.) and the rate of change of the average of all monitored conductor temperature in the circuitry does not exceed ± 0.2°C. Adjustment of the current to a circuit in order to maintain a given amperage value is not to be considered a perturbation.

5.7.9 During testing, the magnitude of the currents in the red and white conductors shall be within ± 1 percent of the current in the black conductor or ± 0.5 amp, whichever is greater. Once equilibrium has been achieved, the measured current in each of the three phases shall be averaged together to obtain one current value. This average current value will be used in the equation in Attachment C, page C-42, as the test current at equilibrium to calculate the normalized current.

REV 5

5.7.10 In order to statistically assure thermal equilibrium, the conductor temperature will be averaged at each sampling period and a linear regression analysis performed on the data obtained from that and all other averages taken of the preceding 60-minute period. The slope of the line will be in °C/hour. As soon as the absolute value of the slope of these data becomes less than 0.2, equilibrium has been reached. Reference Attachment B for a detailed procedure for performing this analysis. This will be performed using computerized data retrieval and analysis. (Reference Attachment A, page A-1, for test setup.)

5.7.11 Additional parameters to measure

a. External (surface) temperature of each test sample, measured on top of the sample and in two locations.

b. Representative measurement of current, voltage, and phase angle for each test.

5.7.12 Measure the moisture content of the Thermolag using a hand-held moisture meter. Measurements will be taken on the top and bottom exterior of the conduit at the midsection. This measurement shall be made within four hours of ending the test. The moisture instrument is not traceable to NIST.

6.0 REPORT

6.1 Final Report

The final report shall describe the test requirements, report the results of the tests, and reference procedures and test instructions required to perform this test plan. The following information specifically shall be included.

1. Description of the test configuration.
2. Date of the test.
3. Location of the test.
4. Description of the test equipment and test articles.
5. Calibration documentation of all thermocouples.
6. Qualification and certification for test personnel.
7. Test procedures used.
8. Ampacity values determined and accompanying equilibrium temperatures.
9. Description of:
   a. Test article construction
   b. Installation and inspection procedure
   c. Identification and installation of fire barrier material
   d. Thermocouple locations
   e. Cables, size, type, and location
10. Computer printout and graphic results of the ampacity test.
11. All raw data.
12. 35mm photographic coverage of the test project.
13. Provide a chronological log (Event Log) of all activities from receipt of materials through final test report.

6.2 Anomalies

All abnormal or unusual occurrences related to the performance of the test instrumentation, test fixtures, or test specimens shall be reported as an anomaly. This shall also include deficiencies in test methods, procedures, instructions and any deviation from the test plan.

A notice of anomaly report shall be initiated and forwarded to the customer once an anomaly has been identified. All anomalies shall be investigated, their impact on the test shall be established, and corrective action acceptable to the customer accomplished prior to continuation of any testing. Final customer acceptance shall be documented by the customer's approval of the notice of anomaly report.

7.0 ATTACHMENTS

7.1 Attachment A - Test Setup

7.2 Attachment B - Linear Regression Fit Method

7.3 Attachment C - Drafts 11 and 12 of IEEE P848 and Exceptions to Draft 11

7.4 Attachment D - Thermal Science Incorporated Acceptance Criteria for Moisture Content

7.5 Attachment E - Memorandum from Corporate Engineering to document the current accuracy requirement

0186T

ATTACHMENT A

TEST SETUP

TEST SET-UP FOR ONE CONDUIT AND CABLE ARRANGEMENT TYPICAL OF EIGHT

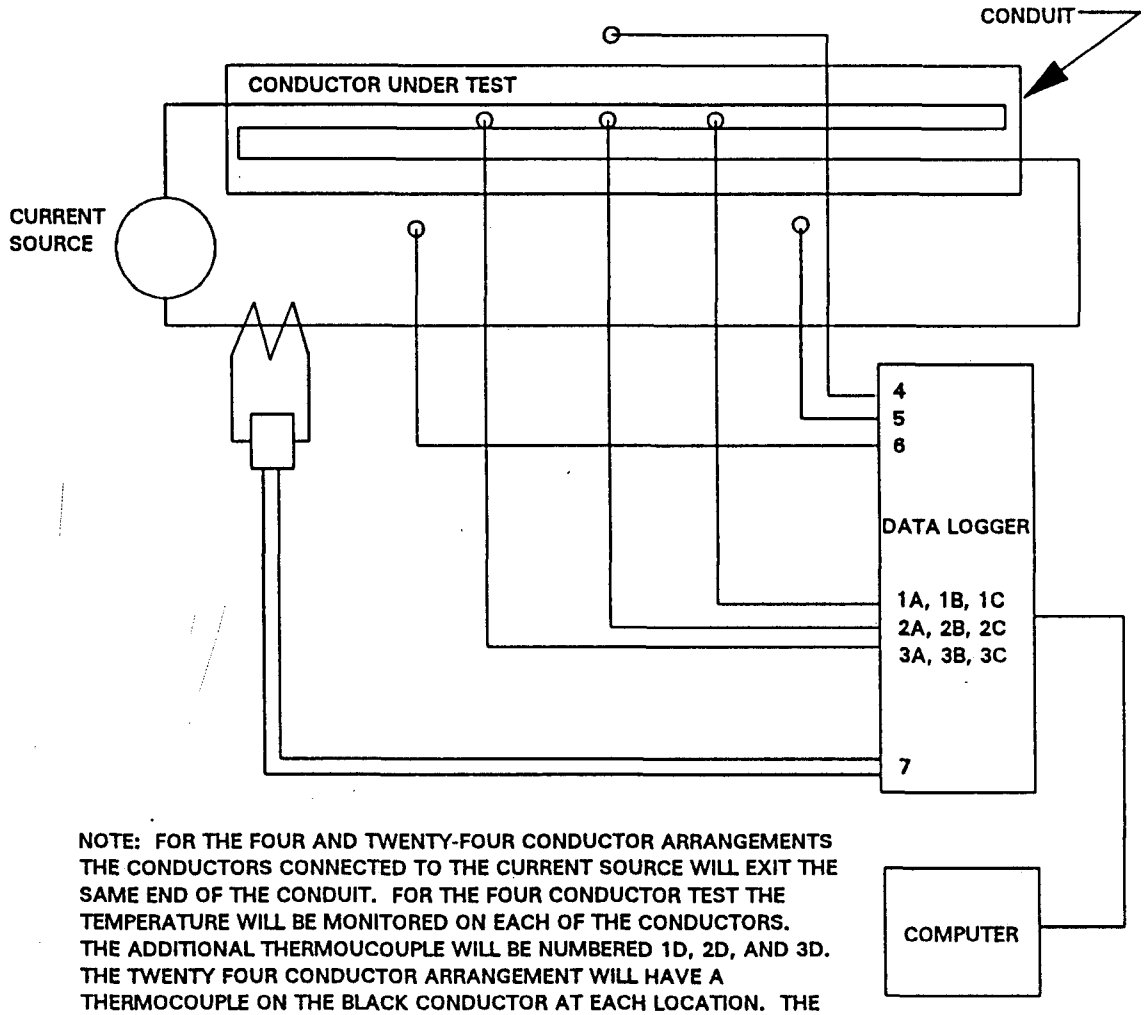

NOTE: FOR THE FOUR AND TWENTY-FOUR CONDUCTOR ARRANGEMENTS THE CONDUCTORS CONNECTED TO THE CURRENT SOURCE WILL EXIT THE SAME END OF THE CONDUIT. FOR THE FOUR CONDUCTOR TEST THE TEMPERATURE WILL BE MONITORED ON EACH OF THE CONDUCTORS. THE ADDITIONAL THERMOUCOUPLE WILL BE NUMBERED 1D, 2D, AND 3D. THE TWENTY FOUR CONDUCTOR ARRANGEMENT WILL HAVE A THERMOCOUPLE ON THE BLACK CONDUCTOR AT EACH LOCATION. THE EIGHT 3/CONDUCTOR, 3 PHASE ARRANGEMENT WILL HAVE A THERMOCOUPLE ON THE BLACK CONDUCTOR AT EACH LOCATION. THE ADDITIONAL THERMOCOUPLES WILL BE NUMBERED 1D THROUGH 1H, 2D THROUGH 2H, AND 3D THROUGH 3H.

INPUTS 1, 2, AND 3 WILL BE AVERAGED AND USED TO CALCULATE LINEAR REGRESSION. EACH ARRANGEMENT WILL HAVE THERMOCOUPLES INSTALLED AS DESCRIBED ABOVE. THIS WILL YIELD A TOTAL OF 9 TEMPERATURES (12 ON 4 COND., 24 ON 24 COND., AND 24 ON THE EIGHT 3/CONDUCTOR, 3 PHASE) TO BE AVERAGED. THE SLOPE OF THE LINE MUST BE LESS THAN THE ABSOLUTE VALUE OF 0.2. INPUTS 4, 5, AND 6 WILL BE AVERAGED FOR ROOM TEMPERATURE 40 DEG C +/- 2 DEG C. INPUT 7 IS THE CURRENT MEASURED IN THE CIRCUIT BY MEANS OF A CURRENT TRANSFORMER AND CURRENT TRANSDUCER. THREE CURRENT SOURCES AND THREE CURRENT TRANSFORMERS AND CURRENT TRANSDUCERS WILL BE USED FOR THE THREE PHASE CIRCUIT.

A-1

C:\FL\CINDY\9305014.DWG

THERMOCOUPLE LOCATIONS

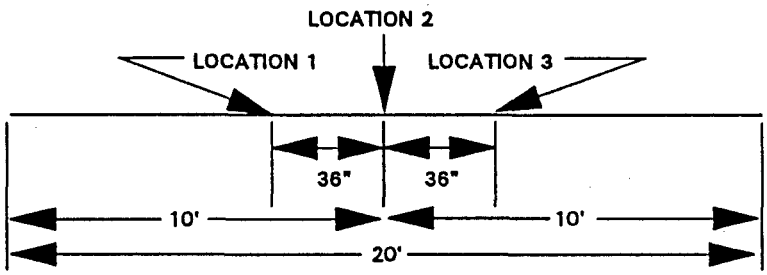

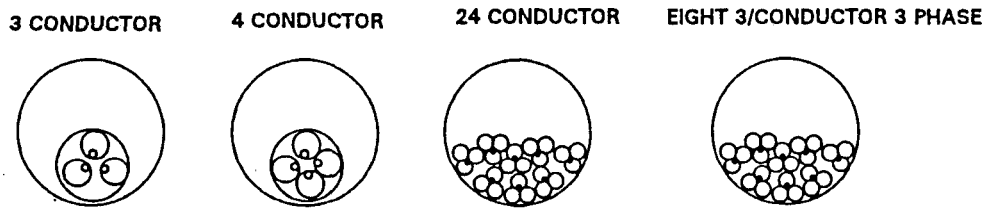

THERMOCOUPLE GOES ON THE CONDUCTORS - ONE ON EACH CONDUCTOR AT EACH LOCATION FOR THE 3 AND 4 CONDUCTOR ARRANGEMENTS, ONE ON THE BLACK CONDUCTOR AT EACH LOCATION FOR THE 24 CONDUCTOR ARRANGEMENT, AND ONE ON THE BLACK CONDUCTOR AT EACH LOCATION FOR THE EIGHT 3/CONDUCTOR 3 PHASE ARRANGEMENT.

ENCLOSURE WALLS A MINIMUM OF 18 INCHES FROM THE SUPPORTS
SUPPORTS LOCATED 5 FEET FROM EACH END.

C:\FL\CINDY\9305011.DWG

ATTACHMENT B

LINEAR REGRESSION METHOD

As an example of the least-squares technique, consider the conduit in Attachment A, page A-1. At each sampling time, an average temperature of all thermocouples will be calculated. This value will then be added to the top of an array large enough the hold 60 minutes worth of these averages, and the oldest value discarded. A linear regression fit is then performed on the array and presented on the video screen to the operator. When the next data sampling is completed, the entire process is repeated, thus yielding a linear regression fit of the data from the previous 60 minutes. As each new data point is added to the array, all previous ones are shifted down on time increment until each is finally discarded due to the fixed size of the array.

$$Y = mX + b \qquad \overline{X} = \sum X/n \qquad \overline{Y} = \sum Y/n$$

$$m = \frac{\sum XY - \dfrac{\sum X \sum Y}{n}}{\sum X^2 - \dfrac{(\sum X)^2}{n}}$$

$$b = \overline{Y} - m\overline{X}$$

WHERE:

X=AVERAGE CONDUCTOR TEMPERATURE (DEG C)

Y=TIME INCREMENT (MIN)

M=SLOPE OF LINE(DEG C/MIN)

B=Y-AXIS INTERCEPT 9DEG C)

C:\FL\CINDY\9305016.DWG

ATTACHMENT C

DRAFTS 11 AND 12 OF IEEE P848 AND EXCEPTIONS TO DRAFT 11

ATTACHMENT 2

April 6, 1992

P848/D11

PROCEDURE FOR THE DETERMINATION OF THE AMPACITY DERATING OF FIRE PROTECTED CABLES

Prepared by Task Group 12-45
of the Test and Measurements Subcommittee #12
of the IEEE Insulated Conductors Committee

All rights reserved by the Institute of Electrical and Electronics Engineers, Inc.

At the time this draft was completed, the Task Group on Procedure for the Determination of the Ampacity Derating of Fire Protected Cables had the following membership.

A.K. Gwal, Chairman

T. J. Al-Hussaini
P. Bhatia
E. A. Capouch
E. J. Coffey
E. J. D'Aquanno
R. Das
J. Daly
P. J. Finnerty
J. B. Gardner
P. A. Giaccaglia
A. Hiranandani
C.V. Johnson
A.E. Kollar
R. G. Koza
R. Licht
J. E. Merando, Jr.
K. W. Prier
D. N. Priest
B. E. Reagan
G. A. Remaley
P. D. Skelly
M. Spurlock
W. Torok
J. R. Tuzinski
F. W. Van Nest
T. A. Venkataraman
J. G. Waligorski

Other individuals who have contributed are:

K. W. Brown
D. C. Gasda

PROCEDURE

for the Determination

of the

AMPACITY DERATING OF FIRE PROTECTED CABLES

DRAFT 11

April 1992

INTRODUCTION

Many installations incorporate individual or grouped cables which do not limit the flame propagation under fire conditions. This deficiency can be attributed to conventional cable constructions, such as polyethylene insulated PVC jacketed control cables; which were popular in the sixties and early seventies. Such cables do not meet the flame spread criteria when subjected to the vertical tray flame test which has been accepted in one form or another. Other installations which fall in the same category include metal sheathed or armored vertical shaft cables with overall polyethylene jacket and secured with clamps at various intervals. Polyethylene jacket is used because of its high resistance to creep under pressure in the clamp area to support the sheer weight of the cable.

The foregoing installations include industrial, commercial, marine, nuclear or fossil generating stations and others.

To retard the flame propagation properties of cables in cable trays, protective coatings are applied either along the entire length of the cable(s) or in certain sections as deemed necessary. The flame retardant coatings may be in a form of tapes, blankets, liquids or mastics applied to individual or to grouped cables, both for retrofitting existing installations or for new installations.

1. PURPOSE

The purpose of the standard is to provide a test procedure which may be used to determine the ampacity derating required for fire protected cables in conduit, in penetrations (fire stop) and in cable tray systems.

2. SCOPE

This standard provides a detailed procedure for determining the ampacity derating required for fire protected cable systems. The tests are intended to be used to determine the ampacity derating of fire protected systems which is to be applied to the ampacity of cables determined by standard methods such as ICEA P-46-426 Power Cable Ampacity Volumes 1 & 2, and ICEA P-54-440 Cables in Open-top Cable Trays.

2.1 General

The procedure presented in this standard includes the principles and methods of testing. This test procedure will provide the ampacity derating of a fire protected cable system.

2.2 Applicability

Fire protected cable systems outlined herein are intended for use in power generating stations, both nuclear and fossil, as well as other applicable commercial and industrial installations, both outdoors and indoor. The categories of cables include, but are not limited to: power, control, and instrumentation including signal and communication cables. Testing of flame retardant coatings on horizontal cables will qualify the coatings for all orientations. The tests as described herein are intended to be used in determining the derating factor, which may be required for fire protected cables in conduits and trays. The ampacity of the cable in raceway will typically have first been determined using accepted practices such as ICEA P-46-426 Power Cable Ampacities Volumes I and II, and ICEA P-54-440 Cables in Open-Top Cable Trays.

The user of flame retardant coatings is cautioned to determine that the coating is compatible with the cable materials with which it comes in contact and with the environment in which it is installed. The user may specify tests in addition to those specified in this standard to reflect the installation conditions, e.g., for nuclear stations, the user may wish to add irradiation test or effects of added weight; or for outdoor installations, the user may wish to add a U.V. resistance test.

3. DEFINITIONS

These definitions establish the meanings of words in the context of their use in this standard.

Fire Protected Cable Systems

Cable systems to which an application of a flame retardant barrier, fire resistive barrier or coating (flame retardant coating) to protect cables from fires from any cause has been applied.

Flame Retardant Coatings

A material applied to a completed cable or assembly of cables to prevent the propagation of flame when exposed to a flame source. Flame retardant coatings include tapes, blankets, liquids, flame retardant mechanical system or mastics.

Passive Fire Protection Systems

Systems which embody fire resistant construction such as coatings, barriers, walls, and penetrations (fire stops) as opposed to water sprinkler systems or gaseous extinguishing systems.

Through-Penetration Fire-stop

A specific construction of devices, fill materials, or both, designed to resist the penetration of fire through those openings in fire resistive floors or walls that are intended to accommodate electric cables, raceways and mechanical service penetrations.

Ampacity Derating Factor

A factor applicable to the ampacity rating of a cable (or other device) to account for the adverse affects of some installation or environmental condition.

Raceway

Any channel that is designed and used expressly for supporting or enclosing wires, cables, or bus bars. Raceways consist primarily of, but are not restricted to, cable trays and conduits.

Cable Tray

A continuous rigid structure used to support cables. Cable trays include ladders, troughs, channels and other similar structures. Conduits are not included in this category.

Enclosures

A surrounding case or housing used to protect the contained equipment and prevent personnel from accidentally contacting live parts.

4. REFERENCES

The following standards were used as references in preparing this standard and may be useful in the interpretation of its meaning:

ICEA P-46-426/IEEE S-135
Power Cable Ampacities, Vols. 1 and 2. Dated 1962 (Reprinted in 1984).

ICEA P-54-440/NEMA WC-51
Ampacities - Cable in Open Top Cable Trays. Dated 1986.

5. TEST DESCRIPTION

5.1 General

This section describes the method for determining ampacities of cable passing through single tray and conduit with and without a passive fire protection system.

5.1.1 Applicability

This method shall be applicable to a single cable or groups of cables enclosed in a passive fire protection system. Cables may be contained in a raceway or as dictated by the actual installation.

5.1.2 Method of Testing

Ampacity derating for cables of a passive fire protective system shall be by testing. Testing shall be performed using the configurations depicted in Figures 1 and 2. As an alternative, tests may be performed using representative assembly which can be analyzed to show its applicability to actual installed conditions. Results are also applicable for 1000 volts and higher rated cables.

5.2 Test Specimens

5.2.1 Cable Selection

The cable to be utilized is chosen as one which is representative of a wide range of cables. The selection of a 3 conductor cross link polyethylene insulated, #6 AWG 600 volts copper cable with an overall chlorosulfonated polyethylene (i.e. hypalon) jacket was chosen as representative.

5.2.2 Cable Fill

Cable fill is the ratio of cable area to the inside area of the tray expressed in percentage. A 40 percent cable fill, as determined from actual measurement shall be used for cable trays.

5.2.3 Cable Layout

The length of both the conduit and the tray shall be twelve feet. One to two feet of cable shall extend out each end and shall be wrapped with unfaced fiberglass blanket insulation (or electrically-heated tape) as necessary to eliminate heat flow out of raceway ends.

5.2.4 Conduit

The conduit system shall be 4 inch and 1 inch steel rigid conduit, 12 feet long supported every 18 inches from each end by a horizontal piece of "H"-shaped or 2" x 2" square structural tubing.

5.2.5 Tray

The tray shall be a 4 inch deep, 24 inch wide ladder-back steel cable tray 12 feet and support similarly to the conduit system. The tray and conduit systems, if tested together, must be at least 36 inches apart along their lengths.

5.2.6 Through-Penetration Fire-stops

A through-penetration fire-stop intended for installation in a fire resistive floor assembly, wall assembly, or both, is to be installed in a wall section so that the electrical cables pass horizontally through the wall. The through-penetration fire-stop is to be installed in

accordance with all requirements specified for the fire-stop being tested.

The sample wall section is to be representative of that specified for the through-penetration fire-stop. The thickness of the wall section is to be equal to the maximum thickness of the fir-estop system or device. The size of the through opening in the wall section is to be representative of the through opening size specified for the through-penetration fire-stop.

The fire protective system is to be installed around the electrical cable(s) and raceway(s) in accordance with all requirements specified for the system.

5.3 Test Facility

5.3.1 Test Room

The ampacity test shall be conducted in an enclosure as defined in Figure 3. The test specimen shall be suitably enclosed such that temperature around the specimen shall be controlled at the test temperature of 40°C±2°C. The enclosure surrounding the test specimen shall be of even temperature, but must not cause drafts on the test specimen. The temperature inside the enclosure shall be measured at no less than three places one foot from the specimen, and in the horizontal plane of the test specimen. The temperature of the enclosure shall be taken as the average of the steady state measurements.

5.3.2 Cable Installation

5.3.2.1 Tray

The tray is to be loaded with three conductor #6 AWG, 3/c copper cable, with an overall chlorosulfonated polyethylene jacket. The tray fill should be based on 40 percent fill.

Tray cables should be installed in an orderly, symmetric manner, so as to limit the flow of air through the bundle, and to facilitate inter and intra-laboratory repeatability of these tests. The cables shall be connected as a single series electrical circuit, which contains all conductors in the system. The tray is to be supported by two horizontal pieces of "H"-shaped or a suitable support system, located as shown in Figure 3. A 3" x 25" piece

of 1" thick mineral fiber blanket shall be placed between the tray and support system to form a thermal break. Thermal insulation (e.g., fiberglass or electrically-heated tape) shall be wrapped around the cable which extends out of both ends of the tray to allow adjustment of end temperatures. The end temperatures must be adjusted such that the average values for the thermocouples at locations 1 and 3 are within 4°C of the average for location 2 to minimize axial heat flow.

5.3.2.2 Conduit

Since the application of the fire protection system may result in differing derating for different conduit sizes, two sizes of conduits shall be tested:

(a) 1 inch rigid steel conduit with one 3/c No 6 AWG copper cable

(b) 4 inch rigid steel conduit with one 3/c, 750 Kcmil copper cable

Derating for both sizes shall be reported. Lowest factor shall be used for ampacity derating. The bundle shall be instrumented with thermocouples as shown in Figure 2, tied with wraps every 2 feet, and pulled into position in the conduit. The cables shall be connected as a single series electrical circuit, which contains all conductors in the system. The conduit is to be supported by two horizontal pieces of "H" shaped or 2" x 2" structural square tubing with a minimum of 36 inches clearance from the tray or walls of the enclosure. The attachment points between the conduit and the supporting beam are to be insulated with 1" thick mineral fiber blanket to form a thermal break similar to the tray system. Insulation (or electrically-heated tape) shall be wrapped around the cable which extends out of both ends of the conduit to allow adjustment of end temperatures. The end temperatures must be adjusted such that the average values for the thermocouples at locations 1 and 3 are within 4°C of the average for location 2, to minimize axial heat flow. In other words, the ends should be close to the same temperatures as the middle, thereby minimizing axial heat flow.

5.3.2.3 Through-Penetration Fire-stops

The electrical cable(s) and raceway(s) penetrating the sample wall section are to be representative of those specified for the through-penetration fire-stop and are to be of sufficient length to project a minimum of 24 inches beyond both sides of the wall section. For this purpose maximum thickness of fire-stop shall be measured. Thermocouples on the electrical cables in through-penetration fire-stops are to be located so that temperatures are measured in the interior of the fire-stop and at the fire-stop mid-depth as in figure 5.

5.3.2.4 Orientation

The test specimens shall be mounted and the tests run in the horizontal direction so as to eliminate any possibility of a "chimney-effect" which could cause air movement within the system.

5.3.2.5 Thermocouple Placement

Thermocouples (24 gage, Type K [Special Grade] Chromel-Alumel, accuracy ±1.15°C) shall be installed by slitting the cable insulation and jacket and placing the thermojunction in intimate physical contact with the conductor strands, as illustrated in Figure 4. The cable shall then be restored as closely as possible to its original condition, and the slit sealed with a single-layer spiral wrap of electrical tape. Since the test is evaluating the temperature at the hottest position, rather than the average of all thermocouples, the cables within the bundle have been instrumented, instead of those near the outside. For both the conduit and tray systems, thermocouples shall be placed at each of three vertical planes along their lengths, as illustrated in Figures 1 and 2. The tray system shall be instrumented with 13 thermocouples at each plane, for a total of 39 thermocouples, and the conduit system shall be monitored with 1 thermocouple at each plane, for a total of 3 thermocouples.

5.3.2.6 Installation of Passive Fire Protection Systems

The tray and/or conduit is to be lifted off it's support after the completion of the baseline test, the passive fire protective system applied in accordance with the manufacturer's instructions, and the entire assembly lowered onto the horizontal

support, thereby minimizing any heat sink effect from the support system. After installation, the passive fire protection system shall be allowed to equilibrate (or cure) to a state of constant moisture content, if applicable. Moisture content (in terms of percent moisture) shall be taken 4 hours or less before the test is begun and within 4 hours after completion of the test, using either a hand-held moisture meter, or standard 120°C oven-dry methods). Such moisture determination is to be made on the top and bottom exterior surfaces of both the tray and conduit systems at their mid-length, and the results of top and bottom averaged.

5.4 Test Procedure

5.4.1 Baseline Evaluation

At least one baseline experiment for each system (conduit and tray) using Sections 5.4.2, 5.4.4, and 5.4.5 shall be conducted to establish the cable ampacity prior to application of the fire protective system. The ampacity value measured should be compared to the IEEE-ICEA Power Cable ampacities standards.

5.4.2 Current

The circuit shall be energized with 60 Hz, single phase alternating current sufficient to reach a steady-state temperature of 90°C at the hottest single point monitored at location 2 (see Figures 1 & 2). The current values measured shall be reported to the nearest 0.1 ampere. The use of a constant-current amplifier is highly recommended as a power source, since the increasing temperatures of the conductor circuit cause resistance changes. Alternatively large variable transformers may be used, with constant readjustment to maintain a set current flow.

5.4.3 Temperature Measurement

All temperatures shall be recorded at intervals no greater than 1 minute. The current in each test circuit shall be adjusted so as to give an equilibrium temperature of 90°C±1.1°C at the hottest point monitored within location #2 (those located at the center of the system). The average temperatures of thermocouple locations #1 and #3 shall be within ±4°C of the average of thermocouple location #2. Each cable circuit shall be

considered to be in steady state condition when a three-hour period has elapsed since any perturbation of the system occurred (current adjustment, box temperature change, additional insulation placed on ends, etc.) and the rate of change of the average of all monitored conductor temperatures in that circuit does not exceed ±0.55°C for the conduit[1] and ±0.35°C for tray[1]. Re-adjustment of the current flow to a circuit in order to maintain a given amperage value is not to be considered a perturbation.

In order to statistically assure thermal equilibrium, the conductor temperatures should be averaged at each sampling period and a linear regression analysis (least-squares fit) performed on the data obtained from that and all other averages taken over the preceding 60 minute period. The slope of the line obtained will be in units of °C/hour. As soon as the absolute value of the slope of these data becomes less than 0.55 (conduit) or 0.35 (tray), equilibrium has been reached. The degrees of freedom obtained by averaging many thermocouple locations (3 for conduit, 39 for tray), allows the precision to exceed the ±1.1°C limit of any one thermocouple. The only practical method of obtaining the required accuracy in determining thermal equilibrium is through the use of computerized data retrieval.

As an example of the least-squares technique, consider the tray system in Figure 1. At each sampling time, an average temperature of thermocouples 1 through 39 will be calculated. This value will then be added to the top of an array large enough to hold 60 minutes worth of these averages, and the oldest value discarded. A linear regression fit is then performed on the array and presented on the video screen to the operator. When the next data sampling is completed, the entire process is repeated, thus yield a linear regression fit of the data from the previous 60 minutes. As each new data point is added to array, all previous ones are shifted down one time increment, until each is finally discarded due to the fixed size of the array.

[1] Chosen as the 95% confidence limits for Special Grade, Type K thermocouples at 90°C.

LINEAR REGRESSION (LEAST SQUARES METHOD) FIT:

$$Y = mX + b \qquad \overline{X} = \Sigma X/n$$

$$\overline{Y} = \Sigma Y/n$$

$$m = \frac{\Sigma XY - \frac{\Sigma X \Sigma Y}{n}}{\Sigma X^2 - \frac{(\Sigma X)^2}{n}}$$

$$b = \overline{Y} - m\overline{X}$$

Where:

Y = Average Conductor Temperature (°C)
X = Time Increment (min)
m = Slope of line (C/min)
b = Y-Axis intercept (°C)

5.4.4 Enclosure Temperature

The temperature within the test enclosure shall be controlled to 40°C ±2°C. Some induced air movement within the enclosure is necessary to achieve uniform steady-state temperatures, but care must be taken to avoid direct air currents against the test specimens. Method of ambient temperature control within the test enclosure is important and care must be taken to avoid any additional heat loading on the cables by radiation from heat source.

6. EVALUATION OF TESTS

By a simple comparison of the baseline and test specimen ampacities, a derating factor can be calculated.

Data Interpretation: Ampacity Derating Factor

The maximum current carrying capacity shall be determined by derating applied as dictated by the test. The derating factor as determined by the test is to be calculated as follows:

% Ampacity Derating Factor = $(I_0 - I_f)/ I_0 \times 100$

Where:

I_0 = Current in amperes required to attain a temperature of 90 °C for the baseline (un-protected) system. However, if I_0 is larger than published ampacity i.e. ICEA P-46-426, P-54-440 then published ampacity shall be used for I_0.

I_f = Current in amperes required to attain a temperature of 90 °C for the system as protected by the passive fire protection system.

7. DOCUMENTATION OF TESTING

Following the procedure outlined in this standard, provide percentage ampacity derating and record the following specific data.

- Description of cables and raceway, if different from specified herein.
- All thermocouple data
- All current and voltage values
- Current and conductor temperature values observed at equilibrium
- Weight of passive fire protection system (lb/ft)
- Average thickness of fire protective system (inches)
- Details of installation of fire protective system

The documentation of records shall be provided in the form of a FINAL REPORT. The report shall contain for permanent record all information pertaining to the test including the Test Plan, laboratory notebook, all raw data, interpretations, and observations. The report shall provide the documentation of all the above parameters and evidence of calibration to NIST standards for equipment used in obtaining this data (including before and after calibration of thermocouples), and appropriate resolution of any test anomalies. All calculations, conclusions or interpretations shall have been checked and approved by authorized individuals certified by the testing organization to be knowledgeable of the techniques used.

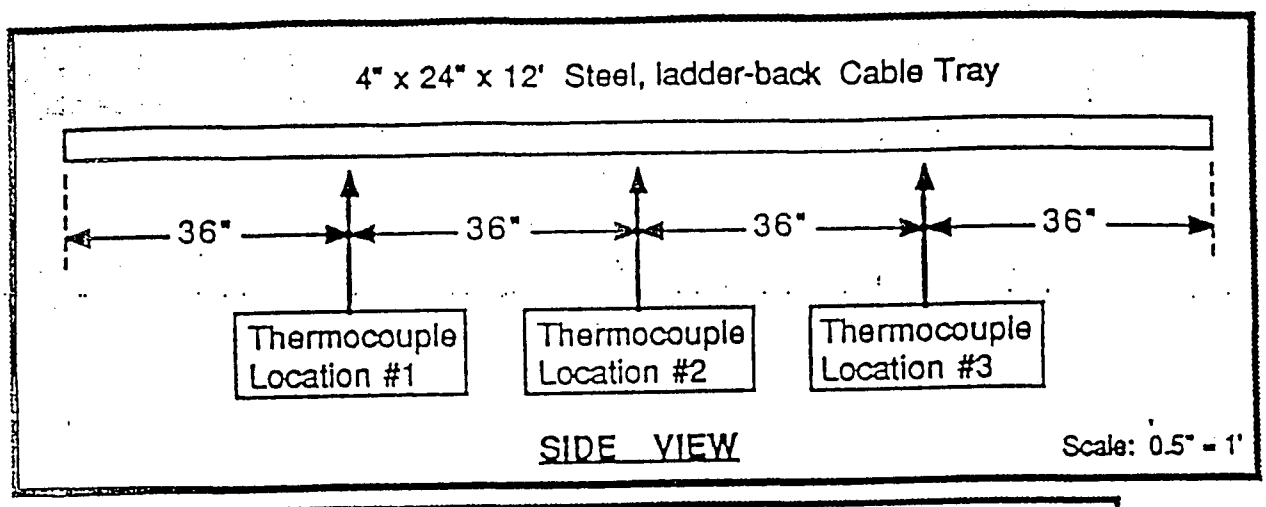

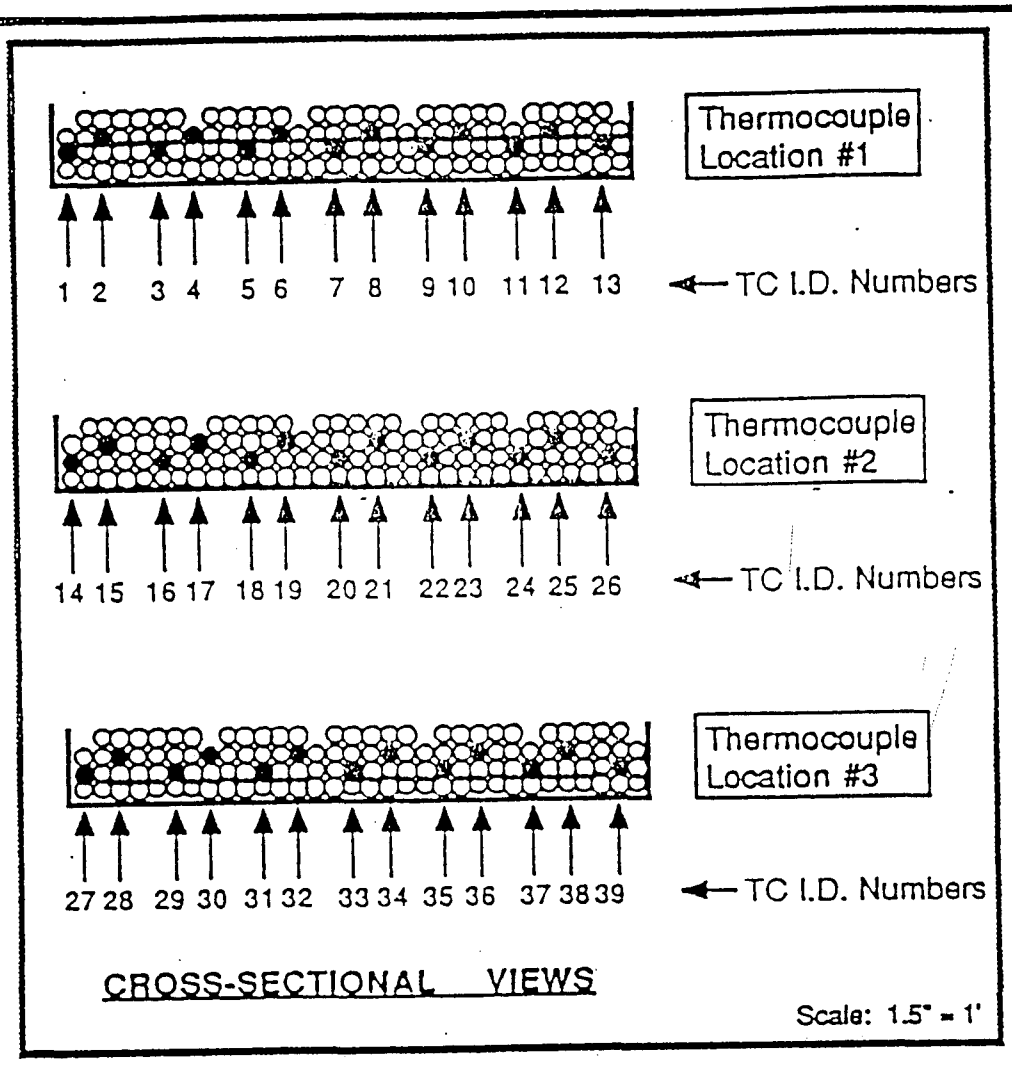

NOTE: Cable tray is to be 100% visual-fill with 3 Conductor #6 AWG Cable. Number of cables = 122. Cable diameter = 0.75 inch.

TRAY AMPACITY DESIGN

Figure 1

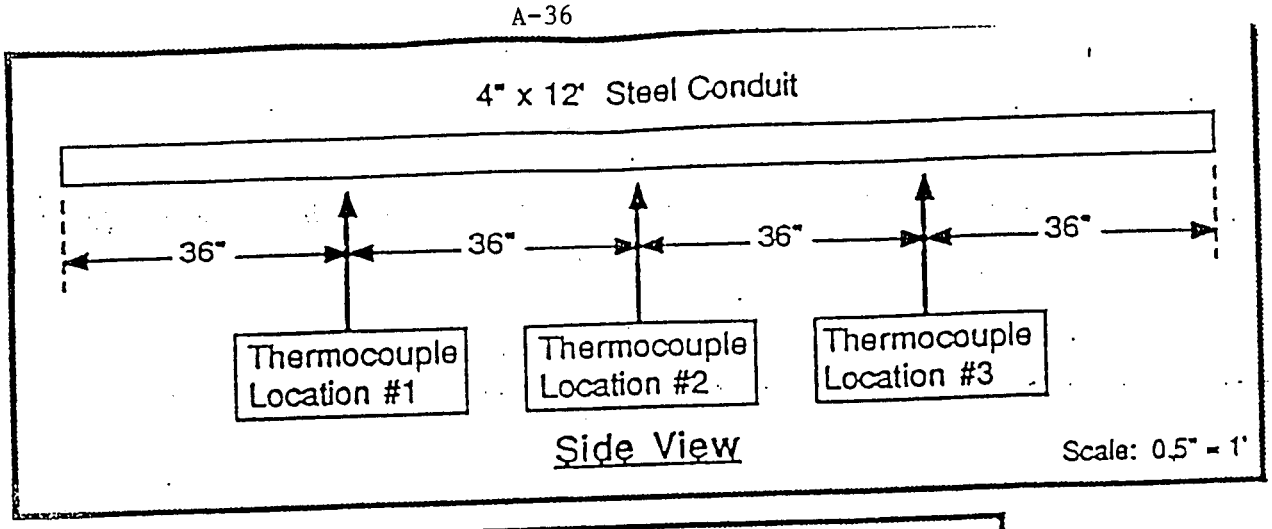

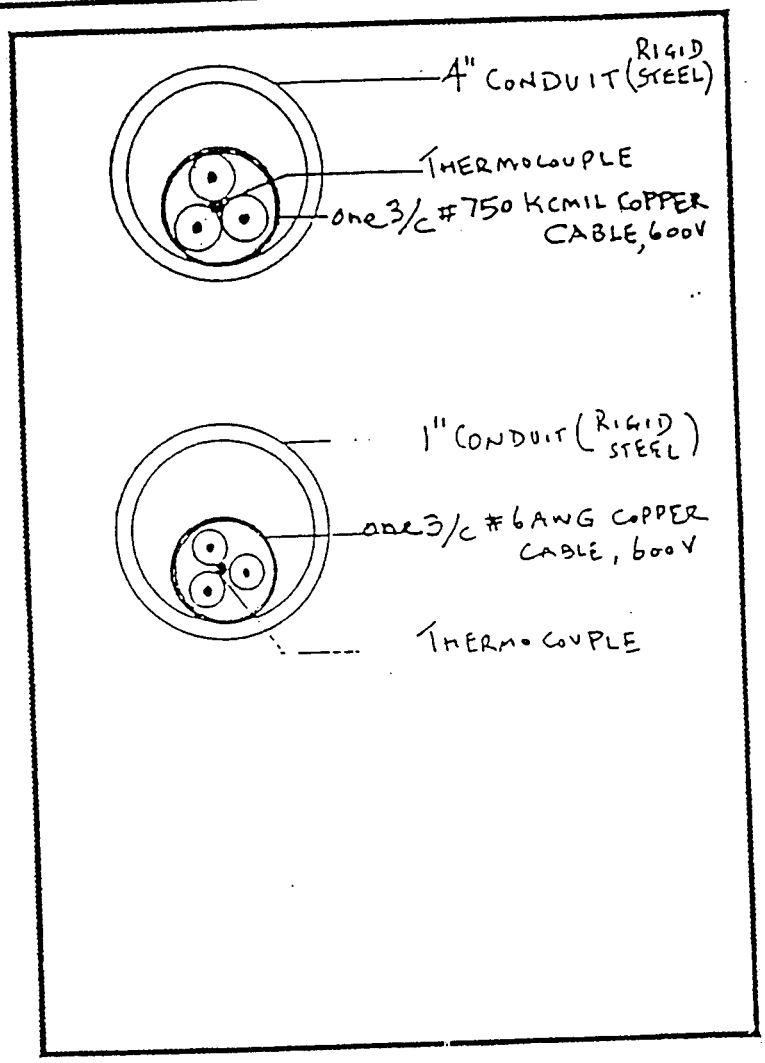

CONDUIT AMPACITY DESIGN

Figure 2

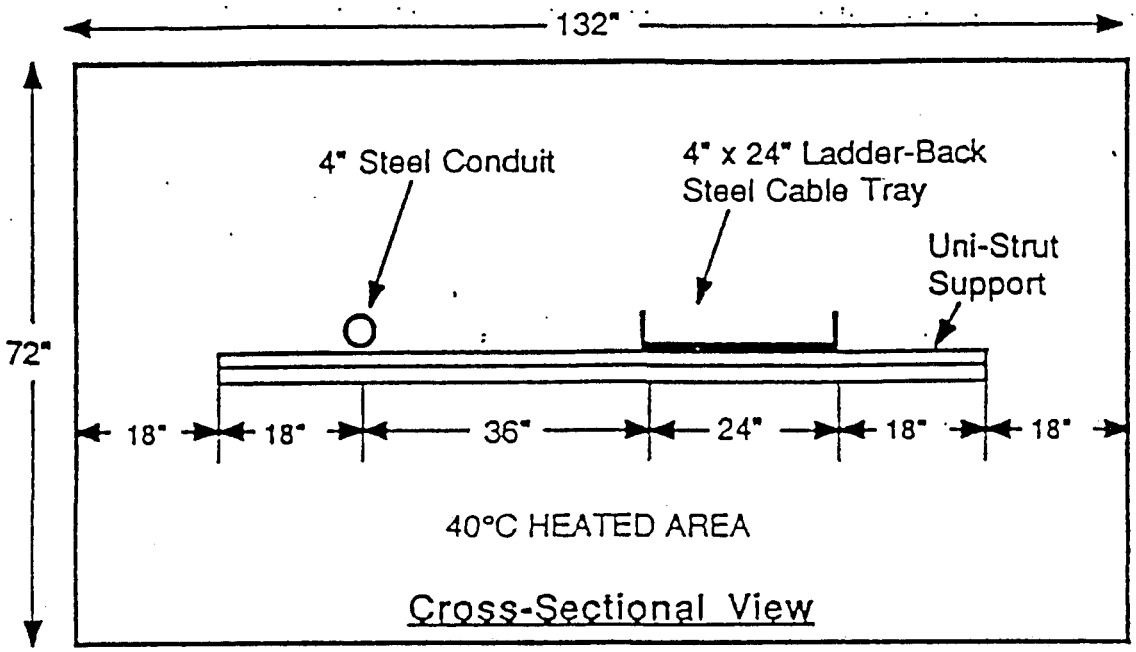

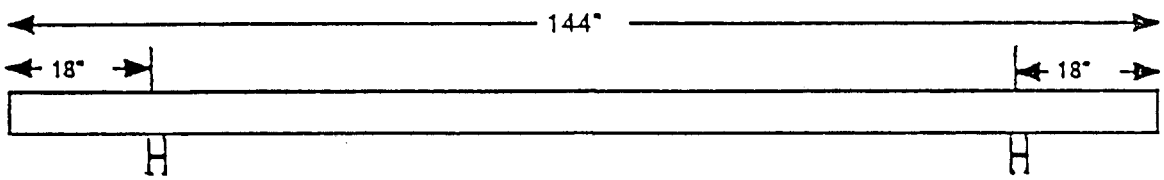

Conduit & Tray Support Points

CONDUIT AND TRAY AMPACITY DESIGN

Figure 3

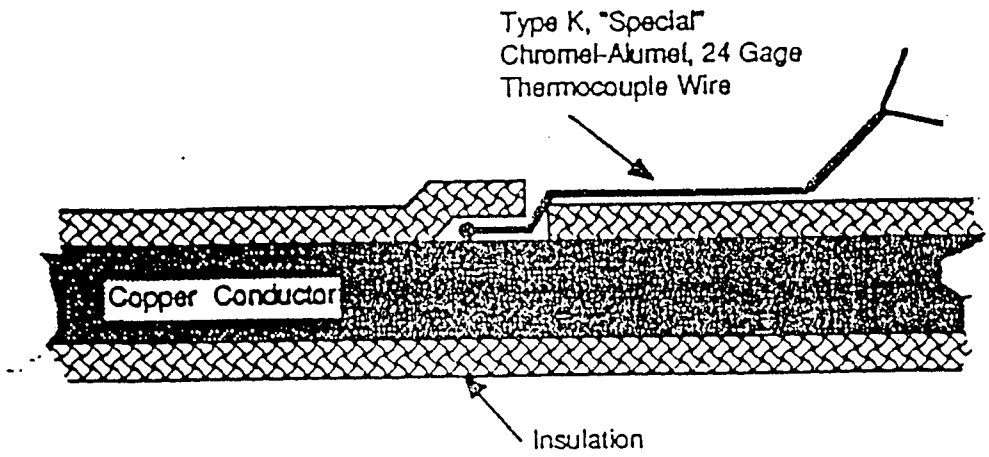

NOTE:

To attach thermo-junction to copper conductor, make an approximately 2 inch long slit in the outer wrap, expose the three conductors, locate the conductor to be instrumented, make a 1 inch slit in the insulation and insert the thermocouple junction in contact with the strands. Close the slit, reposition the wouter wrap and seal with a spiral wind of a single layer of glass-reinforced electrical tape.

Figure 4

P 848/D12 February 24, 1993

IEEE STANDARD

PROCEDURE FOR THE DETERMINATION OF THE AMPACITY DERATING OF FIRE PROTECTED CABLES

Sponsor

Insulated Conductors Committee of the

IEEE Power Engineering Society

Prepared by Task Force 12-45 of
Test and Measurements Subcommittee No. 12 of
Insulated Conductors Committee

Copyright 1993 by the Institute of Electrical and Electronics Engineers, Inc.
345 East 47th Street
New York, NY 10017, USA
All rights reserved.

This is an unapproved draft of the proposed IEEE Standard, subject to change. Permission is hereby granted for IEEE Standards Committee participants to reproduce this document for purposes of IEEE standardization activities. Permission is also granted for member bodies and technical committees of ISO and IEC to reproduce this document for purposes of developing a national position. Other entities seeking permission to reproduce this document for standardization or other activities, or to reproduce portions of this document for these or other uses, must contact the IEEE Standards Department for the appropriate license. Use of information contained in this unapproved draft is at your own risk.

IEEE Standards Department
Copyright and Permissions
445 Hoes Lane, P.O. Box 1331
Piscataway, NJ 08855-1331, USA

Foreword

(This Foreword is not a part of IEEE Std. P 848/D12, IEEE Standard - Procedure for the Determination of the Ampacity Derating of Fire Protected Cables)

Many cable installations in nuclear and fossil fuel generating stations require the installation of fire stop, fire protective materials, coating, and electrical separation wrap materials over the cables or the raceway for fire protection or electrical separation purposes. 10CFR50 Appendix R for nuclear plants may require some electrical circuits enclosed in a fire protective material. IEEE 634-1976 specifies requirements for cable penetration fire stops at fire rated walls and floors. Compliance with IEEE 384-1992 may require installation of a wrap material over free air-drop cables or solid covers on cable trays.

Building codes for commercial and industrial facilities in some states require power cables, used in emergency power systems, to remain functional during a fire exposure. This may also necessitate the use of the fire protective material.

As discussed in IEEE 422 and IEEE 690, utility generating stations use cable ampacities provided in ICEA P-46-426 for conduits, spaced cable tray installations and duct bank installations. ICEA P-54-440 is used for cable installation in random filled open-top trays. Commercial, industrial and non-utility owned generating stations utilize cable ampacities published in NFPA-70 (National Electric Code). The National Electric Code permits the use of ICEA P-46-426 and ICEA P-54-440 under the direction of engineers

Fire-protection related products may reduce the heat transfer characteristics associated with the ampacities provided in ICEA P-46-426 and ICEA P-54-440. In future revisions, these ampacity standards may incorporate these new installation conditions on cable ampacity. Not all products, however, may be covered by changes in the ampacity standards due to their limited use to the generating station market. Hence, ampacity testing to determine ampacity derating of fire protected cable systems is necessary.

Several analytical cable ampacity methods are listed in the bibliography to address fire stops, tray enclosure materials, and cable wrap material. The user may consider the applications of these analytical methods to avoid testing of minor differences in the installation of a given product.

Copyright © 1993 IEEE. All rights reserved
This is an unapproved IEEE Standards Draft, subject to change

This standard was prepared by the Task Group on Procedure for the Determination of the Ampacity Derating of Fire Protected Cables, Subcommittee on Tests and Measurements, Insulated Conductors Committee. The membership of the working group during the preparation of this draft was:

A.K. Gwal, Chair
J.L.White, Vice Chair

T.J. Al-Hussaini
P.Bhatia
K.Brown
E.A.Capouch
E.J.Coffey
E.J.D'Aquanno
J.Daly
P.A.Giaccaglia
A.Hiranandani
A.E.Kollar
R.Licht
J.E.Merando
K.A.Petty
K.W.Prier
D.N.Priest
P.D.Skelly
M.Spurlock
W.Torok
F.W.Van Nest
J.G. Waligorski

Copyright © 1993 IEEE. All rights reserved
This is an unapproved IEEE Standards Draft, subject to change

TABLE OF CONTENTS

Section		Page
1	Overview	7
	1.1 Purpose	7
	1.2 Scope	7
2	References	8
3	Definitions	9
4	Test Description	9
	4.1 General	9
	4.1.1 Applicability	9
	4.1.2 Method of Testing	10
	4.2 Test Specimens - Protected Cable Systems	10
	4.2.1 Cable Selection	10
	4.2.2 Cable Fill	10
	4.2.3 Conduit	10
	4.2.4 Tray	11
	4.2.5 Free-Air Drop	11
	4.2.6 Fire Protective Material	11
	4.3 Test Specimens - Cable Penetration Fire Stop	11
	4.3.1 Cable Selection	11
	4.3.2 Cable Fill	12
	4.3.3 Conduit	12
	4.3.4 Tray	12
	4.3.5 Floor/Wall Assembly	12
	4.3.6 Fire Stop Design	12
	4.4 Test Facility	13
	4.4.1 Test Enclosure	13
	4.4.2 Test Specimen Installation	13
	4.4.2.1 Tray	13
	4.4.2.2 Conduit	13
	4.4.2.3 Free-Air Drop	13
	4.4.2.4 Cable Penetration Fire Stops	14
	4.4.2.5 Orientation	14
	4.4.2.6 Installation of Fire Protective Systems	14
	4.4.3 Thermocouple Selection and Placement	14
	4.5 Test Procedure	15
	4.5.1 Baseline Evaluation	15

Copyright © 1993 IEEE. All rights reserved
This is an unapproved IEEE Standards Draft, subject to change

4.5.2 Current Source 15
4.5.3 Temperature Measurement 15
4.5.4 Enclosure Temperature 17

5 Evaluation of Test Results 23

5.1 Normalizing Test Results 23

5.2 Ampacity Derating Factor 23

6 Documentation of Testing 24

7 Bibliography 25

Copyright © 1993 IEEE. All rights reserved
This is an unapproved IEEE Standards Draft, subject to change

TABLE OF CONTENTS (cont)

Section | Page

FIGURES

FIG 4-1	Tray Configuration - Protective Cable System	18
FIG 4-2	Conduit and Free-Air Drop Configurations - Protective Cable System	19
FIG 4-3	Configuration- Cable Penetration Fire Stop	20
FIG 4-4	Enclosure and Support Requirements	21
FIG 4-5	Thermocouple Attachment to Conductor	22

Copyright © 1993 IEEE. All rights reserved
This is an unapproved IEEE Standards Draft, subject to change

1 Overview

1.1 **Purpose.** The purpose of this standard is to provide a test procedure for use in establishing the ampacity or ampacity derating factor for cables installed in fire protected conduits, trays, or free air-drops, cable penetration fire stops, or electrical separation wrap systems.

1.2 **Scope.** This standard provides a detailed test procedure for determining the ampacity or derating factor in the following cable installation configurations:

(1) Block-out or sleeve type cable penetration fire stops.

(2) Conduits covered with a protective material.

(3) Tray covered with a protective material.

(4) Tray directly covered or coated with a fire-retardant material.

(5) Free-air drops enclosed with a protective material.

The standard is applicable to cables installed and sized to ICEA P-46-426 for conduits and free air drops, and ICEA P-54-440 for cable tray. ICEA P-46-426 does provide ampacities for cables in a tray with a fixed spacing and may be used for cable penetration fire stop configurations only.

This standard does not endorse the use of or provide application guidance for the installation of cable penetration fire stops and fire protective materials. Cable designs are available which can withstand and remain functional during direct exposure to a fire. The user should refer to IEEE 634 for the qualification requirements of cable penetration fire stops.

Copyright © 1993 IEEE. All rights reserved
This is an unapproved IEEE Standards Draft, subject to change

2 References

ANSI-IEEE Std 100-1990, Standard Dictionary of Electrical and Electronics Terms 4th Edition.

Cross-Linked Thermosetting Polyethylene-Insulated Wire and Cable for the Transmission and Distribution of Electrical Energy. Washington, D.C.: National Electrical Manufacturers Association, 1990. ICEA S-66-524 (NEMA WC 7-1988).

Ethylene Propylene Rubber-Insulated Wire and Cable for the Transmission and Distribution of Electrical Energy. Washington, D.C.: National Electrical Manufacturers Association, 1989. ICEA S-68-516 (NEMA WC 8-1988).

ICEA Standard for Power Cable Ampacities. Washington, D.C.: National Electrical Manufacturers Association, 1962. Reprinted by IEEE under S-135. ICEA P-46-426.

ICEA Standard for Ampacities - Cables in Open-Top Cable Trays. Washington, D.C.: National Electrical Manufacturers Association, 1991; NEMA WC-51. ICEA P-54-440.

IEEE Std. 384-1992, IEEE Standard Criteria for Independence of Class 1E Equipment and Circuits.

IEEE Std. 422-1986, IEEE Guide for the Design and Installation of Cable Systems in Power Generating Stations.

IEEE Std. 690-1984, IEEE Standard for the Design and Installation of Cable Systems for Class IE Circuits in Nuclear Power Generating Stations.

IEEE Std. 634-1978, IEEE Standard Cable Penetration Fire Stop Qualification Test.

Rubber-Insulated Wire and Cable for the Transmission and Distribution of Electrical Energy. Washington, D.C.: National Electrical Manufacturers Association, 1980. ICEA S-19-81 (NEMA WC 3-1980).

The National Electric Code, National Fire Protection Association, NFPA 70-1990, Quincy, MA.

Copyright © 1993 IEEE. All rights reserved
This is an unapproved IEEE Standards Draft, subject to change

3 Definitions

3.1 ampacity derating factor: A numeric value representing the fractional reduction from a base ampacity cable rating. Ampacity derating factors are associated with specific installation conditions not presently addressed in the base ampacity.

3.2 ampacity correction factor: A numeric value equal to one minus the ampacity derating factor.

3.3 cable penetration fire stop: Material, devices or an assembly of parts providing ;cable penetrations through fire-rated walls, floors, floor-ceiling assemblies, and maintaining required fire rating.

3.4 cable tray: A raceway resembling a ladder and usually constructed of metal. Other styles of trays include solid-bottom, and channel type.

3.5 fire protected cable systems: Cable systems to which a fire protective enclosure material has been applied either in direct contact with the cables or applied over the raceway to protect cables from fire.

3.6 fire retardant coatings: Material applied along the length of cables or in localized areas, as deemed necessary, to retard the flame propagation properties of cables in trays.

3.7 raceway: Any channel that is designed and used expressly for supporting or enclosing wires, cable or bus bars. Raceways consist primarily of, but are not restricted to, cable trays and conduit.

4 Test Description

4.1 General

4.1.1 Applicability This method shall apply to cables manufactured in accordance with either ICEA S-66-524, ICEA S-19-81, or ICEA S-68-516 and rated either 600, 2 000, 5 000, 8 000, or 15 000 V. This test is limited to cables installed in the following configurations:

(1) Tray with a fire protected cable system where cables are arranged consistent with ICEA P-54-440.

Copyright © 1993 IEEE. All rights reserved
This is an unapproved IEEE Standards Draft, subject to change

(2) Conduit or free air drop with a fire or electrical separation protected cable system.

(3) Block-out, conduit or sleeve type penetration type fire stop.

4.1.2 **Method of Testing** Cable ampacity or ampacity derating factor shall be established by testing in accordance with the configurations shown in Figures 4-1, 4-2, and 4-3. Test results may also be used to confirm analytical heat transfer models.

4.2 Test Specimens - Protected Cable Systems

4.2.1 **Cable Selection** The cables used in the ampacity tests shall have copper conductor(s), 600 V rated cross-linked polyethylene or ethylene-propylene rubber insulation and a chlorosulfonated polyethylene jacket. Depending on the specific test (as outlined below) the cables shall be rated 600 V and of either 3/C No.6 AWG, 3- 1/C 750 kcmil construction. If a user opts to test using conduits sizes other than 1 and 4 inch (see section 4.2.3) then a 3/C, triplex or 3-1/C cable shall be chosen to achieve the maximum allowable fill. When 1/C cables are used for conduit or free air drops, they shall be tie wrapped at intervals not to exceed 2 feet.

4.2.2 **Cable Fill** The ampacity of a protected cable system is dependent on a number of factors, including: the actual cable depth in a tray, the number of conductors in a conduit and free air-drop, and the conductor size of the cables. The ampacity derating factor of the barrier/wrap systems, however, is not dependent on the these conditions. In order to avoid introducing other types of derating factors, e.g. multiple conductors in a conduit or close conduit grouping factors, the following cable fill conditions shall be used.

(1) Random filled tray: Three layers of 3/C No.6 AWG cables, 0.75 inch diameter, 32 cables per layer, resulting in a depth of 2.25 inches for the 24 inch wide tray.

(2) Conduit: Single circuit of three conductors sized to match the conduit in accordance with NFPA-70 or the largest commercially available size, not to exceed 750 kcmil, generally used in conduits. (See Section 4.2.1)

(3) Free-Air Drop: Fill requirements do not apply.

4.2.3 **Conduit** Conduit ampacity tests shall utilize 1 and 4 inch rigid steel conduits. Tests conducted using these two sizes shall be considered representative of all sizes provided that the fire protective system installation methods and configurations are consistent across the entire size range. Where the installation methods, configurations, or fit differ according to conduit size the user shall test sizes to bound the

Copyright © 1993 IEEE. All rights reserved
This is an unapproved IEEE Standards Draft, subject to change

specific application. Conduits shall be a minimum of 12 ft long. The conduit shall be isolated from its supporting structure by wooden blocks.

In addition to the conduit, the junction boxes and pull boxes may also be enclosed with a protective material. Since the surface area of the boxes is significantly greater than the conduit, heat transfer is improved proportionally. Therefore, junction boxes and pull boxes do not need to be included in the ampacity test.

4.2.4 **Tray** A commercially available 4 inch deep - 24 inch wide ladder-back style steel cable tray, a minimum of 12 ft long shall be used. The tray shall be isolated from the support by wooden blocks.

4.2.5 **Free-Air Drop** Ampacity tests shall be conducted on free air drop configurations consisting of 1-3/C No.6 AWG and 3-1/C 750 kcmil, respectively. Tests conducted using these two sizes shall be considered representative of all sizes provided that the fire protective system installation methods and configurations are consistent across the entire size range. Where the installation methods, configurations, or fit differ according to size the user shall test sizes to bound the specific application. Free air drops shall be a minimum of 12 ft long. The test specimen shall be supported to prevent sagging and shall be isolated from its supporting structure by wooden blocks.

4.2.6 **Fire Protective Material** The protective material shall be representative of the installed product at maximum thickness. If the product is typically applied in a non-uniform manner, e.g. overlap joint when product is butted, then these sections shall be included in the test.

Some fire-protected cable systems utilize an end seal where the barrier or wrap ends in order to prevent the intrusion of hot gases or fire into the end of the tray or conduit. If end seal is less than six inches, then the seal may be excluded from the test. Otherwise, the end seal should be treated and tested in a similar manner to cable fire stop, except the wall section is excluded.

4.3 Test Specimens - Cable Penetration Fire Stop

4.3.1 **Cable Selection** The ampacity of the cable in a cable penetration fire stop varies with cable conductor size, conductor material, and manner of cable installation outside the fire stop. Tests conducted using a 600 V 3/C No. 12 AWG, aluminum conductor with cross-linked polyethylene insulation and an overall chlorosulfonated polyethylene jacket shall be considered representative of other voltage ratings, conductor sizes and copper or aluminum conductors installed in random filled tray. Tests on single conductor 2/0 AWG aluminum conductor 600 V, with cross-linked polyethylene insulation and a chlorosulfonated polyethylene jacket shall be considered to be representative of cables installed in trays with maintained spacing. Tests performed using copper

Copyright © 1993 IEEE. All rights reserved
This is an unapproved IEEE Standards Draft, subject to change

conductor cables may be used only to establish the derating factors for applications using copper conductor.

In cable bus applications, where larger conductor sizes are generally used, cable specimen shall be the smallest conductor in the anticipated use range. Aluminum conductor material shall be used, unless design is limited to copper conductors.

4.3.2 Cable Fill The tray shall be filled to a one inch depth. The corresponding current in ICEA P-54-440 shall be applied.

Ampacity tests on fire stops installed in trays with maintained spacing (per ICEA P-46-426) shall be conducted on a single layer of 2/0 cables separated by one diameter.

Plant specific design conditions may be tested. However, the results may not be extrapolated to lower percentage filled cable trays.

Conduit fill shall be identical to that specified in Section 4.2.2.

4.3.3 Conduit The conduit specimen shall be identical to that used in section 4.2.3., except that the length of the conduit shall be twenty feet. No fire protective material shall be applied to the conduit other than the fire stop.

4.3.4 Tray Tray specimen shall be identical to that used in section 4.2.4, except the length of the tray shall be twenty feet plus the width of the wall. No fire protective material shall be applied to the tray other than the fire stop.

4.3.5 Floor/Wall Assemblies The type of floor/wall construction and thickness affect the ampacity derating of the system. Thicker floors/walls shall be representative of thinner floors/walls of the same construction. Floors/walls constructed of lower thermal conductive materials shall be representative of floors/walls of higher thermal conductive materials.

The floor/wall assembly must maintain a minimum of 24 inches from its outer edge to the edge of the blockout.

For floor assemblies, the raceways may contain 90 degree bends located at a minimum of 24 inches from each surface of the floor assembly.

4.3.6 Fire Stop Design The fire stop configuration to be ampacity tested shall be representative of the maximum permitted installation tolerances, in contrast to fire tests which are typically conducted on fire stops at the minimum tolerance.

4.4 Test Facility

Copyright © 1993 IEEE. All rights reserved
This is an unapproved IEEE Standards Draft, subject to change

4.4.1 Test Enclosure The ampacity test shall be conducted in an enclosure as shown in figure 4-4, such that the temperature around the specimen shall be controlled to 40°C +/- 2°C. The enclosure shall ensure an even temperature and shall limit drafts on the test specimen. The temperature inside the enclosure shall be measured at no less than three places one foot from the specimen, and in the horizontal plane of the test specimen. The temperature of the enclosure shall be taken as the average of the steady state measurements.

4.4.2 Test Specimen Installation

4.4.2.1 Tray The tray is to be uniformly loaded with a single type of cable. The cables shall be installed in an orderly, symmetric manner, so as to limit the flow of air through the cables and to ensure repeatability. Cable tie wraps shall not be used within the tray.

The cables shall be connected as a single series electrical circuit.

When testing the protected cable systems, a section of insulating blanket shall be placed at the ends of the tray to minimize axial heat flow, such that the average values for the thermocouples at locations 1 and 3 (see Figure 4-1) are within +/- 4°C of the average value for location 2.

4.4.2.2 Conduit The cables shall be pulled into the conduit after installation of the thermocouples. No pulling lubricant shall be used. When three single conductor cables are utilized for the conduit tests, the cables shall be bundled with stainless steel tie wraps or glass cloth electrical tape to ensure thermocouple placement is maintained during insertion or removal.

The cables shall be connected as a single series electrical circuit.

A section of insulating blanket shall be placed at the ends of the conduit to minimize axial heat flow, such that the average values for the thermocouples at locations 1 and 3 (see Figure 4-2) are within +/- 4°C of the average for location 2.

4.4.2.3 Free-Air Drop The cables shall be connected as a single series electrical circuit. When three single conductor cables are utilized for these tests, the cables shall be bundled with stainless steel tie wraps or glass cloth electrical tape to ensure thermocouple placement is maintained.

A section of insulating blanket shall be placed at ends of the free air-drop to minimize axial heat flow, such that the average values for the thermocouples at locations 1 and 3 (see Figure 4-2) are within +/- 4°C of the average for location 2.

Copyright © 1993 IEEE. All rights reserved
This is an unapproved IEEE Standards Draft, subject to change

4.4.2.4 Cable Penetration Fire Stop The cables and raceway penetrating the fire stop floor/wall shall be installed in an identical fashion as during fire testing. This may include special spacing requirements. If the fire stop design permits installation of the cables on the tray rungs or directly on the blockout surface, the bounding condition is considered to be with the cables placed on the tray rungs.

4.4.2.5 Orientation The fire protected raceway test specimens shall be mounted horizontally in order to model worst case orientation and to prevent a "chimney-effect." In the case of fire stop tests, open ends of enclosed raceways must be sealed to eliminate air movement.

4.4.2.6 Installation of Fire Protective Systems The tray and conduit is to be raised off its support after completion of the baseline tests. The protective system shall then be applied in accordance with the method established in the fire or electrical separation testing. The entire assembly shall be lowered back onto the supports while ensuring the assembly is not cracked or otherwise distorted. If the protective system can be removed without disturbing the cables or thermocouple placement, then the baseline tests may be performed before or after testing the protective cable system.

If the product undergoes a curing operation, the test specimen's dry state shall be established by the manufacturer and achieved prior to the test through natural or artificial drying.

If the product is reactive at temperatures below 90°C, then the equilibrium time must be extended based on specific analysis.

4.4.3 Thermocouple Selection and Placement Thermocouples shall be a maximum of 24 AWG, Type T special grade - Copper Constantan with an accuracy of +/- 0.5°C or other thermocouple types which have been calibrated to the same level of accuracy. Thermocouple wire shall have waterproof insulation. Thermocouples shall be placed directly against the conductor.

To attach the thermojunction to the cable, make an approximately 2 inch long slit in the outer jacket of the cable, to expose the insulated conductors. Make a one inch slit in the insulation as shown in Figure 4-5. Insert the thermocouple junction in direct contact with the conductor strands. For three conductor cables, close the insulation slit and seal with a single layer of glass-reinforced electrical tape. For single and three conductor cables, reposition the outer jacket and seal with a single layer of glass-reinforced electrical tape.

The test is intended to identify the temperature of the hottest conductor within the center of the protected cable system and cable penetration fire stop. A set of thermocouples shall be installed at each of the vertical

Copyright © 1993 IEEE. All rights reserved
This is an unapproved IEEE Standards Draft, subject to change

planes along the length of the cable as shown in Figures 4-1, 4-2, and 4-3. Conduit and free-air drops shall have the thermocouples placed on all three conductors. Within the tray assembly, thermocouple leads shall remain in the layer in which they are installed and be routed out the end of the tray in the interstices of the cable mass. For fire protected raceways, the following number of thermocouples shall be placed in each vertical plane:

(1) tray configuration - 5

(2) conduit and free-air drop - 3

For ampacity tests of tray penetration fire stops, 5 thermocouples shall be placed on the conductors in the fire stop in accordance with Figure 4-1. One additional thermocouple shall be placed at 2 foot intervals on one conductor of the center cable in the middle layer on each side of the firestop. (Figure 4-3)

For ampacity tests of conduit or free-air drop penetration fire stops, 3 thermocouples shall be placed on the conductors in the fire stop in accordance with Figure 4-2. One additional thermocouple shall be placed at 2 foot intervals on each side of the fire stop.

4.5 Test Procedure

4.5.1 Baseline Evaluation At least one baseline test for each system, i.e. tray, conduit, free air drop, shall be conducted in order to establish baseline ampacities. Baseline evaluation for a tray assembly must be performed on the same physical specimen used for the derating test. Baseline and derating evaluations for conduits and free-air drops shall be performed using the same instrumented cable set.

4.5.2 Current Source The circuit shall be energized with a 60 Hz, single phase source sufficient to cause the conductor to reach 90°C at location 2 in Figures 4-1, 4-2, and location 1 in Figure 4-3. The current shall be measured to an accuracy of +/- 0.5%. The use of a constant-current amplifier is recommended since the increasing temperature changes the circuit load, i.e. conductor resistance. Alternatively, process control devices can be used to generate and maintain the current source.

4.5.3 Temperature Measurement All temperatures shall be recorded at intervals no greater than one minute. The current in each test circuit shall be adjusted to achieve a hot spot conductor temperature of 90°C +/- 1°C at location 2 for the protected cable systems and location 1 for cable penetration fire stop. The average temperature of thermocouple locations 1 and 3 for the protected cable systems shall be within +/- 4°C of the average temperature reading at location 2. No restrictions are placed on the temperature readings at locations outside the cable penetration fire stop.

Copyright © 1993 IEEE. All rights reserved
This is an unapproved IEEE Standards Draft, subject to change

The cable circuit is considered to be have reached steady state condition when:

(1) A minimum of three hours since the last adjustment of current level or perturbation of the system occurred, and

(2) The rate of change of the average of thermocouple reading at hottest spot (location 2 for Figures 4-1 and 4-2, and location 1 for Figure 4-3) does not exceed +/- 0.2°C per hour for conduit, tray, and free-air drop.

Perturbation of the system conditions includes current adjustment, change in the internal temperature of the enclosure, and addition or removal of insulation on the ends of the tray, conduit or free-air drop. Minor adjustment of current ($\leq$ 0.5%) required to keep the current constant is not considered a perturbation of the system.

In order to statistically assure thermal equilibrium, the conductor temperatures shall be averaged at each sampling period. A linear regression analysis using the least-squares method shall be performed on the data obtained over the preceding 60 minute period. The slope of the line shall be expressed in units of °C per hour. When the absolute value of the slope becomes less than 0.2, equilibrium has been reached.

The degrees of freedom obtained by averaging many thermocouple locations, allows the precision to exceed the +/- C limit of any one thermocouple.

The equations for a linear regression using the least squares fit method are shown below:

$$Y = mX + b \tag{1}$$

$$X = \sum \frac{X}{n} \tag{2}$$

$$Y = \sum \frac{Y}{n} \tag{3}$$

$$m = \frac{\sum XY - \frac{\sum X \sum Y}{n}}{\sum X^2 - \frac{(\sum X)^2}{n}} \tag{4}$$

Copyright © 1993 IEEE. All rights reserved
This is an unapproved IEEE Standards Draft, subject to change

$$b = Y - m X \tag{5}$$

Where:

Y	is the average conductor temperature C
X	is the time increment (min)
m	is the slope of line (C/min)
b	is the Y-axis intercept, C

4.5.4 Enclosure Temperature The temperature within the test enclosure shall be controlled to 40 +/- 2 C. Some induced air movement within the enclosure is necessary to achieve uniform steady-state temperatures. Care must be taken to avoid direct air currents against the test specimens. The method of ambient temperature control within the test enclosure is important. Care must be taken to avoid any additional heat loading on the cables by radiation from a heat source.

Copyright © 1993 IEEE. All rights reserved
This is an unapproved IEEE Standards Draft, subject to change

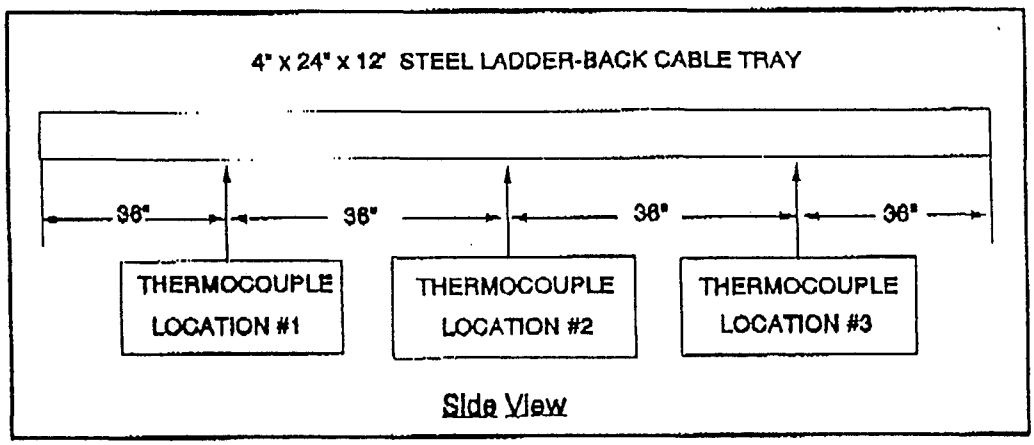

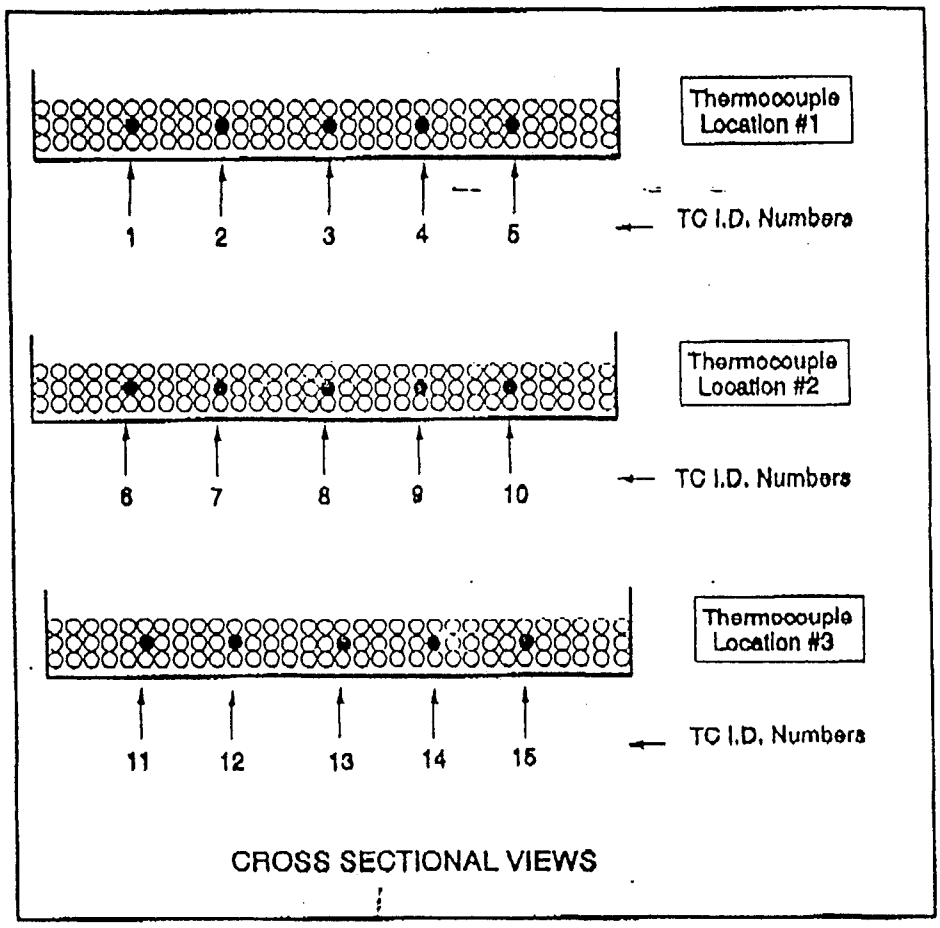

FIG 4-1
Tray Configuration - Protective Cable System

Copyright © 1993 IEEE. All rights reserved
This is an unapproved IEEE Standards Draft, subject to change

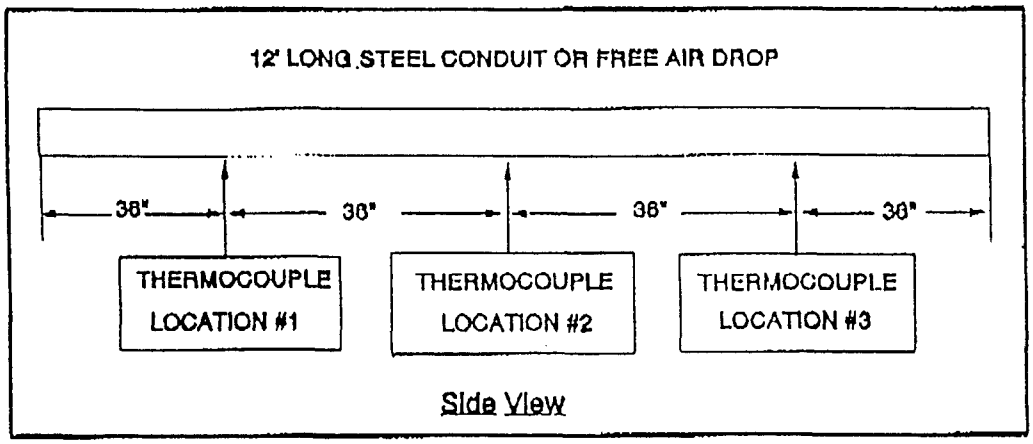

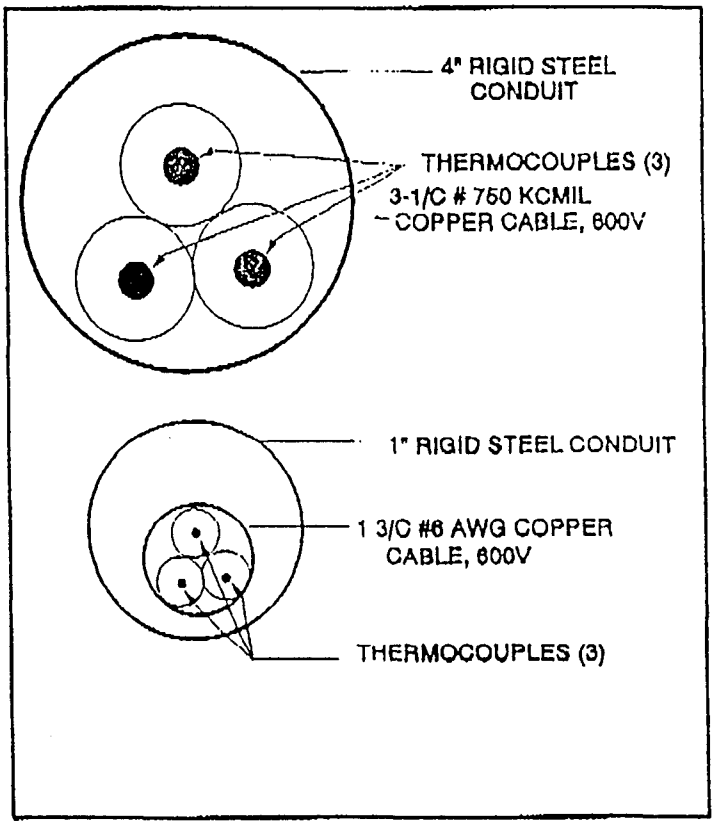

FIG 4-2
Conduit and Free-Air Drop Configurations
- Protective Cable System

Copyright © 1993 IEEE. All rights reserved
This is an unapproved IEEE Standards Draft, subject to change

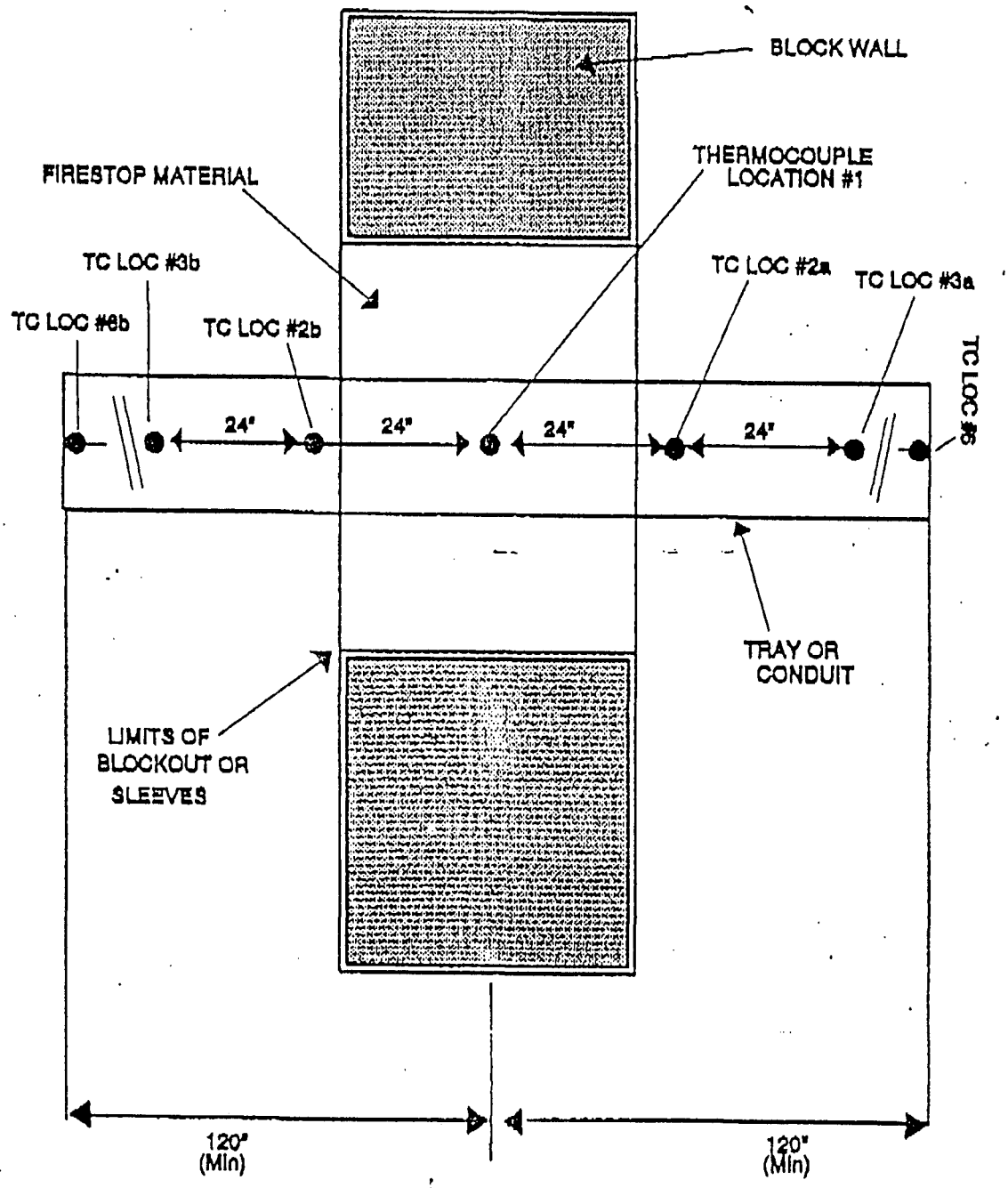

FIG 4-3
Configuration- Cable Penetration Fire Stop

Copyright © 1993 IEEE. All rights reserved
This is an unapproved IEEE Standards Draft, subject to change

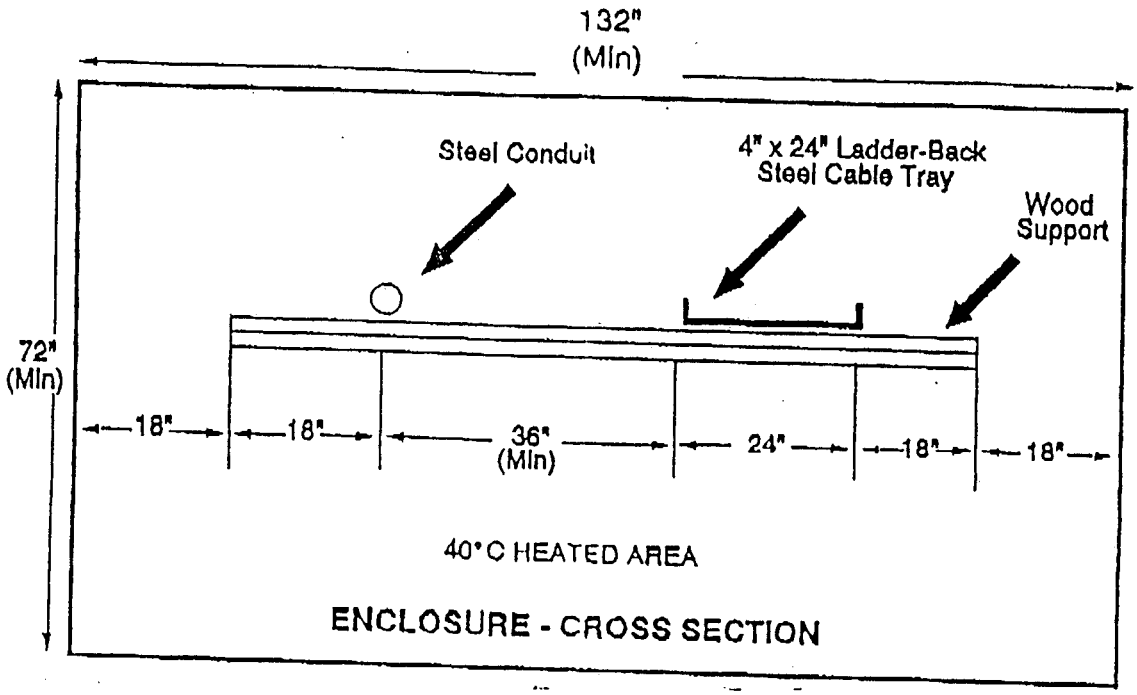

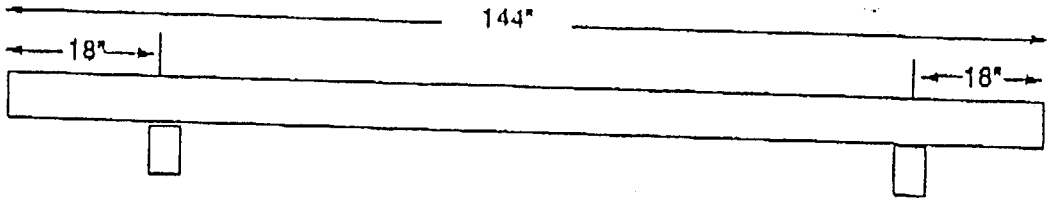

CONDUIT & TRAY SUPPORT POINTS

FIG 4-4
Enclosure and Support Requirements
- Protective Systems

Copyright © 1993 IEEE. All rights reserved
This is an unapproved IEEE Standards Draft, subject to change

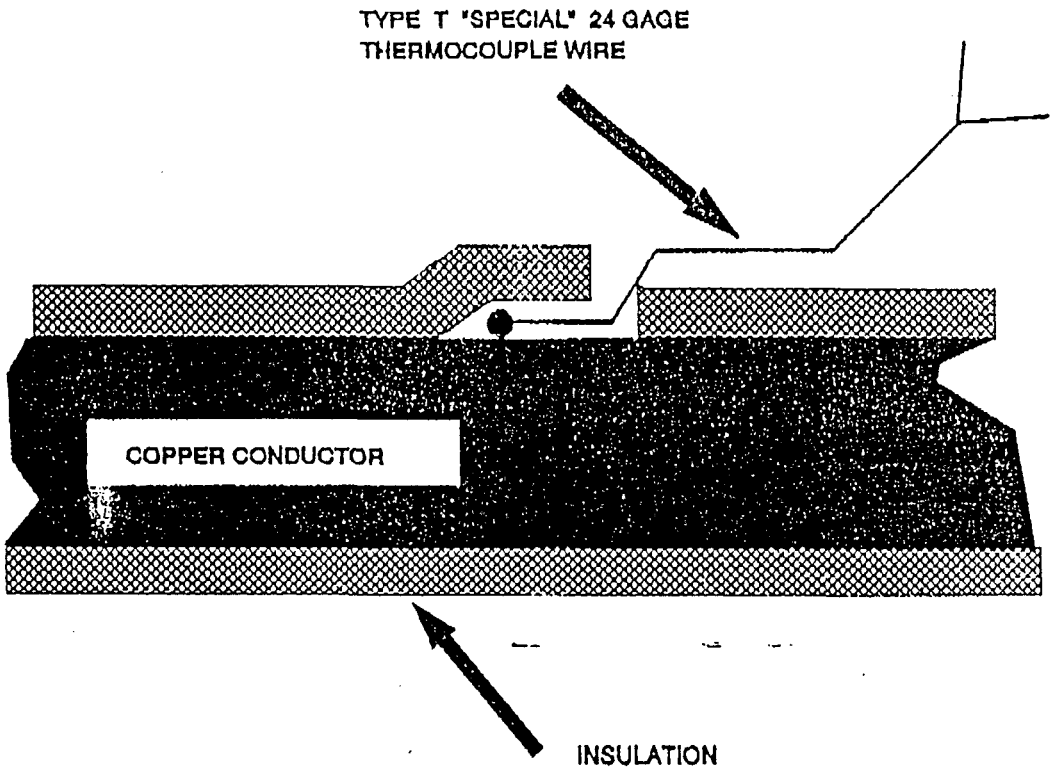

FIG 4-5
Thermocouple Attachment to Conductor

Copyright © 1993 IEEE. All rights reserved
This is an unapproved IEEE Standards Draft, subject to change

5 Evaluation of Test Results

5.1 Normalizing Test Results

After equilibrium has been achieved, the final conductor temperature and the ambient temperature may not match 90 C and 40 C respectively. The results of the baseline and the fire protected cable system tests must be normalized using equation 6 below. The conductor temperature shall be the hottest conductor temperature at location 2 for the protective cable system and location 1 for cable penetration fire stop. The final temperatures must be within the limits established in Section 4.5.4 and 4.5.3.

$$I' = I\sqrt{\frac{(Tc' - Ta')\ (\alpha + Tc)}{(Tc - Ta)\ (\alpha + Tc')}} \qquad (6)$$

where

I	test current at equilibrium, amperes
Tc	hottest conductor temperature at center at equilibrium, C
Ta	measured enclosure ambient temperature, C
I'	normalized current, amperes
Tc'	normalized conductor temperature - 90 C
Ta'	normalized ambient temperature - 40 C
alpha	234.5 for copper or 228.1 for aluminum

5.2 Ampacity Derating Factor

Using the normalized current, as determined from section 5.1, an ampacity derating factor can be calculated using the results of the baseline test and the protected cable system or cable fire stop. The ampacity derating factor (ADF) and ampacity correction factor (ACF) shall be calculated using equations 7 and 8. The user may find it may convenient to express the ampacity results as ampacity correction factor (ACF) for calculation purposes. ACF is applied in a similar fashion as conduit grouping factors and ambient temperature correction factor as shown in ICEA P-46-426.

$$ADF = \frac{(Io - If)}{Io} 100 \qquad (7)$$

Copyright © 1993 IEEE. All rights reserved
This is an unapproved IEEE Standards Draft, subject to change

$$ACF = \frac{If}{Io} \qquad (8)$$

Where

Io	is the normalized current for the baseline condition, amperes
If	is the normalized current for the passive fire protected cable system or cable penetration fire stop system
ADF	is the ampacity derating factor, %
ACF	is the ampacity correction factor

Ampacity derating factors shall be expressed in conjunction with reference to its baseline ampacity standard. This is especially important for cable penetration fire stops where the cable installation method outside the wall has a major influence on the resulting derating factor. Cable Fire stop ampacity derating factor is also restricted in terms of conductor size and material.

Examples illustrating how the ampacity derating factors must be expressed are shown below.

(1) ADF = 18 %, Floor Assembly-Fire Stop Penetration, Product design AAA, applied against ICEA P-46-426 "conduit in air ampacities" for 12 AWG aluminum or copper conductors and larger.

(2) ADF = 7 %, Wall Assembly Fire Stop Penetration, Product design AAA, applied against ICEA P-46-426 "conduit in air ampacities" for 1000 kcmil copper conductors or 1250 kcmil aluminum conductor and larger.

(3) ADF = 20 %, Fire Protective Material - Tray Application, Product design BBB, when applied against ICEA P-54-440.

(4) ADF = 18 %, Electrical Separation Wrap - Free Air Drop, Product design CCC, when applied against ICEA P-46-426 "in free air" ampacities.

6 Documentation of Testing

The test report and the resulting derating factor shall include the following documentation:

(1) Description of the test configuration

(2) Date of the test

(3) Location of the test

(4) Description of the test equipment and test articles

Copyright © 1993 IEEE. All rights reserved
This is an unapproved IEEE Standards Draft, subject to change

(5) Calibration documentation of all thermocouples

(6) Qualification and certification for test personnel

(7) Test procedures used.

(8) Ampacity values determined and accompanying equilibration temperatures.

(9) Provide quality control records for:

(a) Test article construction

(b) Qualification and certification for installation and inspection personnel

(c) Identification and installation of fire barrier material

(d) Thermocouple locations

(e) Cables, size, type, and location

(f) Actual tray and conduit cable fill, and calculated depth of cable fill as defined in ICEA P-54-440

(10) Computer printout and graphic results of the ampacity test

(11) All raw data

(12) 35 mm photographic coverage of the test project

(13) Documentation that product does or does not react at temperatures below 90°C.

(14) Documentation that moisture equilibrium has been achieved.

7 Bibliography

[B1] Stolpe, J., "Ampacities for Cables in Randomly Filled Trays", IEEE Transactions on Power Apparatus and Systems, Vol PAS 90, pp 962-973, 1971

[B2] Nemeth, C.W., RackLiffe, G.B., Legro, J.R., "Ampacites for Cables in Trays with Firestops" IEEE Transactions on Power Apparatus and Systems, Vol PAS 100, No. 7 July 1981

[B3] Herter, V.J., Barry, R.E., Began, T.A., "Ampacity Test of a Silicone Foam Firestop in a Cable Tray" IEEE Transactions on Power Apparatus and Systems, Vol PAS 100, No. 7 July 1981

[B4] Esteves, O.M., "Derating Cables in Trays Traversing Firestops or Wrapped Fireproofing" IEEE Transactions on Power Apparatus and Systems, Vol PAS 102, pp. 1478-1481, 1983

Copyright © 1993 IEEE. All rights reserved
This is an unapproved IEEE Standards Draft, subject to change

[B5] Petty, K.A. "Ampacity of Wrapped Cables" IEEE Transactions on Power Delivery Vol 3 No 1, January 1988

[B6] Hiranandani, A.K. "Rating Power Cables in Wrapped Cable Trays" IEEE Transactions on Power Delivery Vol 3 No 1, January 1988

[B7] Save, P., Engmann, G. "Fire Protection Wrapped Cable Tray Ampacity" IEEE Transactions on Power Generation Vol No , 1989

Copyright © 1993 IEEE. All rights reserved
This is an unapproved IEEE Standards Draft, subject to change

EXCEPTIONS TO IEEE P848/D11

Procedure for the Determination of the Ampacity Derating of Fire Protected Cables

1. Section 5.2.4 states the conduit shall be 12 feet long and supported 18 inches from each end.

   Exception: The conduit is 20 feet long and supported 5 feet from each end.

   Basis: The longer specimen will reduce the affects of heat transfer on the measured temperature. Draft 12 states a minimum of 12 feet.

2. Section 5.3.1 references Figure 3 which shows the enclosure width 132 inches.

   Exception: The enclosure width is 96 inches.

   Basis: The enclosure will be used only for conduit; no trays will be tested so the 96-inch enclosure will be sufficient.

3. Section 5.3.2.2 Part b states that 1-3 conductor 750 MCM copper cable will be used.

   Exception: Three single conductor 750 MCM cables will be bundled together to simulate 1-3 conductor.

   Basis: Draft 12 of the standard states that 3 single conductors can be used.

4. Section 5.3.2.5 states that Type K special grade thermocouples will be used.

   Exception: Type T thermocouples with an accuracy of ± .5°C will be used.

   Basis: Type T thermocouples verified to be within ± .5°C are more accurate than the type K special grade. Draft 12 of the standard states that Type T special grade thermocouples or a thermocouple of equivalent accuracy will be used.

5. Section 5.3.2.5 states that three thermocouples will be used to determine the conductor temperatures.

   Exception: Nine thermocouples will be used. Three thermocouples will be used in each conductor.

   Basis: Draft 12 states that three thermocouples will be used in each vertical plane.

EXCEPTIONS TO IEEE P848/D11 (CONTINUED)

Procedure for the Determination of the Ampacity Derating of Fire Protected Cables

6. Section 5.3.2.6 states the testing is to be sequential so that one conduit and cable is to be used for all of the testing.

   Exception: Four 4" and four 1" conduits are being used for the test.

   Basis: The same instrumented cable set for the baseline and derating tests for each size conduit will be used as specified by draft 12. Different conduit specimens will be used since each Thermolag configuration has a 30-day curing period after installation.

7. Section 5.3.2.6 states that moisture content in percent moisture will be made on the Thermolag.

   Exception: The moisture content measurement will be made using a hand-held meter recommended by Thermal Science Incorporated (Thermolag manufacturer). Reference Attachment D, Page D-1. This instrumentation will not be traceable back to NIST.

   Basis: Draft 12 states that the moisture content will be reported to ensure that moisture equilibrium has been achieved.

8. Section 5.4.2 states the current value will be reported to 0.1 ampere, but no accuracy is stated.

   Exception: The accuracy for the current measurement will be +/- 1% of reading.

   Basis: Draft 12 states an accuracy of +/- 0.5% instead of an absolute current value. Per Attachment E, this value will be changed to +/- 1% in the final issue of P848.

9. Section 5.4.3 states that the rate of change will not exceed +/- .55°C/hour.

   Exception: A value of +/- .2°C/hour will be used.

   Basis: Draft 12 states the rate of change will be .2°C/hour.

EXCEPTIONS TO IEEE P848/D11 (CONTINUED)

Procedure for the Determination of the Ampacity Derating of Fire Protected Cables

10. Section 5.2.1 states that the cable will be a three conductor.

Exception: Four conductor, twenty-four conductor, and eight 3/conductor three-phase configurations will be tested in addition to the three conductor cables.

Basis: The three conductor test has been completed, and inconclusive results were obtained due to inductive heating caused by current imbalance. Use of four conductor and twenty-four conductor cables will minimize the current imbalance and thus the inductive heating in the conduit. Use of eight 3/conductor three-phase cables will verify that results obtained during single-phase testing is applicable to three-phase circuits.

REV 4

ATTACHMENT D

THERMAL SCIENCE INCORPORATED ACCEPTANCE CRITERIA FOR MOISTURE CONTENT

February 23, 1993

Tennessee Valley Authority
LP-4H-C
1101 Market Street
Chattanooga, Tennessee 37402

Attention: Mr. William M. Roop, Jr.
Principal Electrical Engineer

Dear Mr. Roop:

In accord with the information presented in the operating instructions for the Delmhorst Moisture Meter, Model-DP, the manufacturer points out that even readings in the "red zone" of the dial indicate a relatively low moisture content, such as in concrete. The manufacturer further points out that a reading of 35 to 70 on the moisture meter usually indicates a range of moisture content between 2 and 4%.

We recommend that for dry acceptance purposes, the THERMO-LAG 330 Prefabricated Panels and Preshaped Conduit Sections be accepted when the Delmhorst Moisture Meter (Model-DP) has a moisture meter reading of less than 70, on the 0 to 100 scale.

We also recommend that in all areas where THERMO-LAG 330-1 Trowel Grade Material has been applied, that the same acceptance standard be used, a moisture meter reading of less than 70 on the 0 to 100 scale of the Delmhorst Moisture Meter (Model-DP).

Yours truly,

B. E. Evans
Quality Control Manager

BEE/mls

Fax No: 615-751-8247

THERMAL SCIENCE, INC. • 2200 CASSENS DR. • ST. LOUIS, MO 63026 • (314) 349-1233
Telex: 209901 (Answerback: TSI UR) • Telecopier (314) 349-1207

ATTACHMENT E

MEMORANDUM FROM CORPORATE ENGINEERING TO DOCUMENT THE CURRENT ACCURACY REQUIREMENT

B44 930302 001

QA RECORD

March 2, 1993

R.L Morley, PSB1B-C

WATTS BAR NUCLEAR PLANT
AMPACITY DERATING TESTS FOR THERMOLAG FIRE BARRIER MATERIAL
CLSD JOB NUMBER 93-0501

The purpose of this memorandum is to confirm information given to your C.L. Rutledge by K.W. Brown on March 1, 1993. During the course of the review of revision 0 of the test plan for the subject task, it was noted that accuracy requirements in Draft 12 of IEEE P-848 contain a typographical error.

Section 5.4.2 of draft 11 of the subject standard required that the current be measured to within 0.1 amps. As was noted during the March 1 review, the 0.1 amp requirement was a carry over from an earlier draft in which only 3/c No. 6 AWG cables were utilized. Subsequently, derating tests for fire protected conduits were revised to require the use of a 4-inch conduit containing 3-1/c 750 kcmil cables but the working group failed to change the accuracy requirements to a percentage of reading. Such an approach would better reflect the wide disparity between the magnitude of current which would be required for No. 6 AWG and 750 kcmil. Consequently, section 4.5.2 of draft 12 of the standard was revised.

Our K.W. Brown is a member of IEEE/ICC Working Group 12-45 which is preparing the standard. He has checked with other members who were present at the February 22-23 meetings in Boston where draft 12 was prepared and has confirmed that the 0.5 percent limit therein was an error. The requirement should have been to measure current to a 1 percent accuracy. The Working Group has already agreed to correct this section.

Therefore, section 5.3.10 of the test plan shall require that currents during the derating tests are measured with an accuracy of 1 percent.

Should you have any questions regarding the above please contact me at 751-7501.

R.E. Miller
LP4H-C

cc: RIMS, MR 2F-C
J.A. Krieg, LP4H-C
W.R. Roop, LP4H-C
K.W. Brown, LP4H-C

TEST PLAN

WATTS BAR NUCLEAR PLANT
TESTING TO DETERMINE AMPACITY DERATING
FACTORS FOR FIRE PROTECTED CABLES

JOB NUMBER 93-0501

Revision 4

May 28, 1993

C. L. Rutledge
C. L. Rutledge
Project Engineer

Engineering Services
Section

W. E. Joly
W. E. Joly
QA Supervisor

Customer Approval

TEST PLAN

REVISION LOG

Job Number 93-0501

Revision Date	Pages Affected	Description of Change	Prepared By	Approved
Rev. 0 03/02/93	All	Initial Issue	C.L.Rutledge	
Rev. 1 03/09/93	2	Section 5.1.1 Revised description of	C.L.Rutledge	
		test specimen		
		Section 5.1.2 Removed "and couplings"		
	3	Section 5.3.5 Revised description of		
		thermocouple locations		
	4	5.3.11 Add "!"		
	A-2	Revised drawing		
Rev. 2 03/22/93	5	Added Section 5.4	C.L.Rutledge	
	A-1	Added note		
	A-2	Revised drawing		
	C-47	Added item 10		
Rev. 3 04/22/93	5	Added Section 5.5	C.L.Rutledge	
	A-1	Revised drawing		
	A-2	Revised drawing		
	B-1	Revised description		
Rev. 4 05/28/93	6 and 7	Added Section 5.6	C.L.Rutledge	
	A-1	Revised drawing		
	A-2	Revised drawing		
	C-9	Added page		
	C-48	Exception 10 revised		

TABLE OF CONTENTS

1.0 Scope

2.0 References

3.0 Quality Assurance

4.0 Receipt Inspection

5.0 Test Procedure

6.0 Report

7.0 Attachments

1.0 SCOPE

The scope of this test is to perform ampacity derating testing for eight configurations of cable and conduit. Four one-inch and four four-inch conduits with various cable configurations will be tested. The testing will be conducted in a temperature stable enclosure and the enclosure temperature, conductor temperature and current will be measured and recorded. This testing will be performed in accordance with P848 Draft 11. Reference Attachment C, pages C-1 through C-45 for a copy of the standards (drafts 11 and 12) and Attachment C, page C-46 and C-47 for a list of the exceptions to draft 11 of this proposed standard.

2.0 REFERENCES

2.1 CLS-QAP-1.1 "Organization"

2.2 CLS-QAP-4.1 "M & TE Calibration Program"

2.3 CLS-QAP-4.7 "Engineering Services Program"

2.4 ANSI N45.2-1971 "Test Control"

2.5 10 CFR 50 Appendix B "Quality Assurance Criteria for Nuclear Power Plants"

3.0 QUALITY ASSURANCE

3.1 Test Equipment

All test equipment and instrumentation to be used in the performance of this test program shall be calibrated in accordance with applicable standards and QA procedures and will conform to applicable portions of ANSI N45.2 and 10 CFR 50 Appendix B except the moisture meter described in Steps 5.3.3 and 5.3.14. Standards used in performing all calibrations are traceable to the National Institute of Standards and Technology (NIST), natural physical constants, or commercially accepted practices.

3.2 Personnel and Procedures

All personnel, procedures, and instructions used in the performance of this test program shall comply with the applicable requirements of the Central Laboratories Services Department (CLSD) Quality Assurance Program.

4.0 RECEIPT INSPECTION

4.1 Tagging

Each conduit configuration shall have a tag attached for identification. The tag shall bear a unique number with the following format, XX-YYYY-Z where XX- YYYY is the job number and Z denotes the individual test sample. All data associated with the conduit configuration will be identified by this number.

4.2 Inspection

The conduit and cable will be inspected to ensure they are free from any physical defects that will prevent testing from being performed.

5.0 TEST PROCEDURE

5.1 Preparation of Test Specimens

5.1.1 Four 20-foot conduit test sections each for one-inch and four-inch conduits will be prepared.

5.1.2 Weigh a minimum of one 20-foot section of each one-inch and four-inch conduit to obtain an approximate weight of the conduit.

5.1.3 Measure the circumference of one of the four-inch and one of the one-inch conduits. This will be used to calculate the thickness of the Thermolag and Thermolag with upgrade after it has been applied to the conduit.

5.1.4 Each section of conduit shall be supported 60 inches from each end and shall be thermally isolated from the conduit. This shall be accomplished by installing a mineral fiber blanket and/or blocks of wood to form a thermal break.

5.1.5 Each of the following configurations will be prepared.

1) One-inch conduit with no Thermolag (baseline)
2) One-inch conduit with 1/2-inch Thermolag
3) One-inch conduit with 1/2-inch Thermolag and 1/4 inch upgrade
4) One-inch conduit with 1/4-inch Thermolag and 1/4-inch upgrade
5) Four-inch conduit with no Thermolag (baseline)
6) Four-inch conduit with 1/2-inch Thermolag
7) Four-inch conduit with 1/2-inch Thermolag and 1/4-inch upgrade
8) Four-inch conduit with 1/4-inch Thermolag and 1/4-inch upgrade

TVA Nuclear Engineering will supply personnel to assemble these test configurations.

5.2 Preparation of the Test Facility

5.2.1 An enclosure shall be constructed so that the temperature around the specimen shall be controlled at the test temperature of 40°C ± 2°C. Some induced air movement within the enclosure is necessary to achieve uniform steady-state temperatures, but care will be taken to avoid direct air currents against the test specimens. Method of ambient temperature control within the test enclosure is important and care will be taken to avoid any additional heat loading on the cables by radiation from heat sources.

5.2.2 The temperature inside the enclosure shall be measured at no less than three places one foot from the specimen and in the horizontal plane of the test specimen. The temperature of the enclosure will be taken as the average of the steady state measurements.

5.3 Test Procedure

5.3.1 Weigh the conduit and Thermolag configurations. Record the information in the log book.

5.3.2 Measure the Thermolag circumference at 20 places along the length of each conduit and average the data. Using the baseline measurement, calculate the Thermolag thickness. Record the information in the log book.

5.3.3 Measure the moisture content of the Thermolag using a hand held moisture meter. Measurements will be taken on the top and bottom exterior of the conduit at the midsection. This measurement shall be made a minimum of two times. The first measurement shall be at least 24 hours prior to beginning the test and the second measurement shall be within four hours of beginning the testing. The moisture instrument is not traceable to NIST.

5.3.4 One three conductor #6 AWG shall be prepared for the one-inch conduits and single conductor 750 KCM copper cables shall be prepared to simulate a three conductor cable for the four-inch conduits. The same prepared cables will be used for testing each configuration of conduit and Thermolag.

5.3.5 Thermocouples with be installed in three locations as shown in Attachment A, page A-2. The outer jacket will be split or a flap cut, and the inner insulation for each of the conductors will be split or a flap cut.
The thermojunction for the thermocouple (24 gage, Type T with an accuracy of ± 0.5°C) will be inserted into the strands of each of the three conductors. The slit/flap will be resealed with a single layer of spiral wrap of electrical tape. This configuration will have a total of nine thermocouples for each test specimen. The thermocouple lead wires shall be bundled in the center of the three 750 mcm conductors. The cable and thermocouples shall be tied with tape or stainless steel bands every two feet.

5.3.6 The cables with the thermocouples installed shall be pulled into place in the conduit.

5.3.7 The cables shall be connected as a single series electrical circuit, which contains all conductors in the system.

5.3.8 The cables which penetrate the end of the conduit shall be wrapped with thermal insulation. Electrically heated tape may be used to allow the end of the cable to be adjusted to keep the two outer thermocouples within 4°C of the center.

5.3.9 Seal the ends of the conduit with insulation material.

5.3.10 The circuit shall be energized with 60 Hz, single phase alternating current sufficient to reach a steady-state temperature of 90°C at the hottest single point monitored at location two. (Reference Attachment A, page A-2.) The current values measured shall be reported to the nearest 0.1 ampere, and will be accurate to ± 1% of reading.

5.3.11 The temperature measurements will be recorded on a data logger and at intervals no greater than 1 minute. The current in each test circuit shall be adjusted to achieve a hot spot conductor temperature of 90°C ± 1.1°C at location #2. The average temperatures at locations #1 and #3 shall be within ± 4°C of the average temperature readings at location #2.

5.3.12 The system will be considered to be in steady state condition when a three-hour period has elapsed since any perturbation of the system occurred (current adjustment, box temperature change, additional insulation placed on ends, etc.) and the rate of change of the average of all monitored conductor temperatures in that circuitry does not exceed ± 2°C. Readjustment of the current flow to a circuit in order to maintain a given amperage value is not to be considered a perturbation.

5.3.13 In order to statistically assure thermal equilibrium, the conductor temperature will be averaged at each sampling period and a linear regression analysis performed on the data obtained from that and all other averages taken of the preceding 60-minute period. The slope of the line will be in °C/hour. As soon as the absolute value of the slope of these data becomes less than 0.2, equilibrium has been reached. Reference Attachment B for a detailed procedure for performing this analysis. This will be performed using computerized data retrieval and analysis. (Reference Attachment A, page A-1 for test setup.)

5.3.14 Measure the moisture content of the Thermolag using a hand held moisture meter. Measurements will be taken on the top and bottom exterior of the conduit at the midsection. This measurement shall be made within four hours of completing the test. The moisture instrument is not traceable to NIST.

5.4 Four Conductor Test Procedure

NOTE: This testing is performed due to inconsistent results obtained during the three conductor cable test. All test results for the three conductor test and four conductor test will be reported in the final report.

5.4.1 Prepare one four conductor #6 AWG for the one-inch conduits and single conductor 750 KCM copper cables shall be prepared to simulate a four conductor cable for the four-inch conduits. The same prepared cables will be used for testing each configuration of conduit and Thermolag.

5.4.2 Thermocouples will be installed in three locations as shown in Attachment A, page A-2. The outer jacket will be split or a flap cut, and the inner insulation for each of the conductors will be split or a flap cut. The thermojunction for the thermocouple (24 gage, Type T with an accuracy of ± .5°C) will be inserted into the strands of each of the four conductors. The slit/flap will be resealed with a single layer of spiral wrap of electrical tape. This configuration will have a total of twelve thermocouples for each test specimen. The thermocouple lead wires shall be bundled in the center of the four 750 mcm conductors. The cable and thermocouples shall be tied with tape or stainless steel bands every two feet.

5.4.3 Repeat steps 5.3.3 and 5.3.6 through 5.3.14 for each configuration of cable and conduit.

5.5 Twenty-four Conductor in Four-inch Conduit Test Procedure

NOTE: This testing is performed due to inconsistent results obtained during the three and four conductor cable test in the four inch conduit. All test results for the three conductor, four conductor, and twenty-four conductor tests will be reported in the final report.

5.5.1 Prepare eight three conductor 6 AWG sections of cable.

5.5.2 Connect the 24 individual conductors end to end so that they are series connected.

5.5.3 Install thermocouples in three locations as shown in Attachment A, page A-2. The thermocouples will be installed in the black conductors at each of the locations. The outer jacket will be split or a flap cut, and the inner insulation for each of the conductors will be split or a flap cut. The thermojunction for the thermocouple (24 gage, Type T with an accuracy of ± .5°C) will be inserted into the strands of each of the eight conductors monitored. The slit/flap will be resealed with a single layer of spiral wrap of electrical tape. There will be eight thermocouples at each location for a total of twenty-four thermocouples.

5.5.4 Repeat steps 5.3.3 and 5.3.6 through 5.3.14 for each configuration of four-inch conduit.

5.6 Eight 3/Conductor, three phase in Four-inch Conduit Test Procedure

NOTE: This testing is performed to verify results obtained during three, four, and twenty-four conductor single phase testing are applicable to three-phase testing. All test results for the three conductor, four conductor, and twenty-four conductor single-phase tests and the eight 3/conductor three-phase test will be documented in the final report.

5.6.1 Connect eight 3/conductor 6 AWG as described below:

a. Eight black conductors connected in series and connected to a current source.

b. Eight red conductors connected in series and connected to a second current source.

c. Eight white conductors connected in series and connected to a third current source.

5.6.2 Install thermocouples in three locations as shown in Attachment A, page A-2. The thermocouples will be installed in the black conductors at each of the locations. The outer jacket will be split or a flap cut, and the inner insulation for each of the conductors will be split or a flap cut. The thermojunction for the thermocouple (24 gage, Type T with an accuracy of ± .5°C) will be inserted into the strands of each of the eight conductors monitored. The slit/flap will be resealed with a single layer of spiral wrap of electrical tape. There will be eight thermocouples at each location for a total of twenty-four thermocouples. REV 4

5.6.3 Repeat steps 5.3.3 and 5.3.6 through 5.3.14 for each configuration of four-inch conduits. Two configurations of bare conduit will be tested. This will yield a total of five additional tests.

5.6.4 During testing, the magnitude of the currents in the red and white conductors shall be within ± 1 percent of the current in the black conductor or ± 0.5 amps, whichever is greater. Once equilibrium has been achieved, the measured current in each of the three phases shall be averaged together to obtain one current value. This average current value will be used in the equation in Attachment C, page C-42, as the test current at equilibrium to calculate the normalized current.

5.6.5 In addition, to current and temperature measurements presently specified in the test plan the following parameters shall be measured and documented in the final report:

1. External (surface) temperature of each test sample, measured on top of the sample and in two locations. This measurement will be made at least once after the three-hour run has been started but does not have to be measured throughout the entire three-hour run.

2. Representative measurement of current, voltage, and phase angle for each test will be made. This may be performed before or after the three-hour test run has been performed. The above measurements will be included in the final report for previous testing where the data is available.

REV 4

6.0 REPORT

6.1 Final Report

The final report shall describe the test requirements, report the results of the tests, and reference procedures and test instructions required to perform this test plan. The following information specifically shall be included.

1. Description of the test configuration.
2. Date of the test.
3. Location of the test.
4. Description of the test equipment and test articles.
5. Calibration documentation of all thermocouples.
6. Qualification and certification for test personnel.
7. Test procedures used.
8. Ampacity values determined and accompanying equilibrium temperatures.
9. Description of:
   a. Test article construction
   b. Installation and inspection procedure
   c. Identification and installation of fire barrier material
   d. Thermocouple locations
   e. Cables, size, type, and location
10. Computer printout and graphic results of the ampacity test.
11. All raw data.
12. 35mm photographic coverage of the test project.
13. Provide a chronological log (Event Log) of all activities from receipt of materials through final test report.

6.2 Anomalies

All abnormal or unusual occurrences related to the performance of the test instrumentation, test fixtures, or test specimens shall be reported as an anomaly. This shall also include deficiencies in test methods, procedures, instructions and any deviation from the test plan.

A notice of anomaly report shall be initiated and forwarded to the customer once an anomaly has been identified. All anomalies shall be investigated, their impact on the test shall be established, and corrective action acceptable to the customer accomplished prior to continuation of any testing. Final customer acceptance shall be documented by the customer's approval of the notice of anomaly report.

7.0 ATTACHMENTS

7.1 Attachment A - Test Setup

7.2 Attachment B - Linear Regression Fit Method

7.3 Attachment C - Drafts 11 and 12 of IEEE P848 and Exceptions to Draft 11

7.4 Attachment D - Thermal Science Incorporated Acceptance Criteria for Moisture Content

7.5 Attachment E - Memorandum from Corporate Engineering to document the current accuracy requirement

0186T

ATTACHMENT A

TEST SETUP

TEST SET-UP FOR ONE CONDUIT AND CABLE ARRANGEMENT TYPICAL OF EIGHT

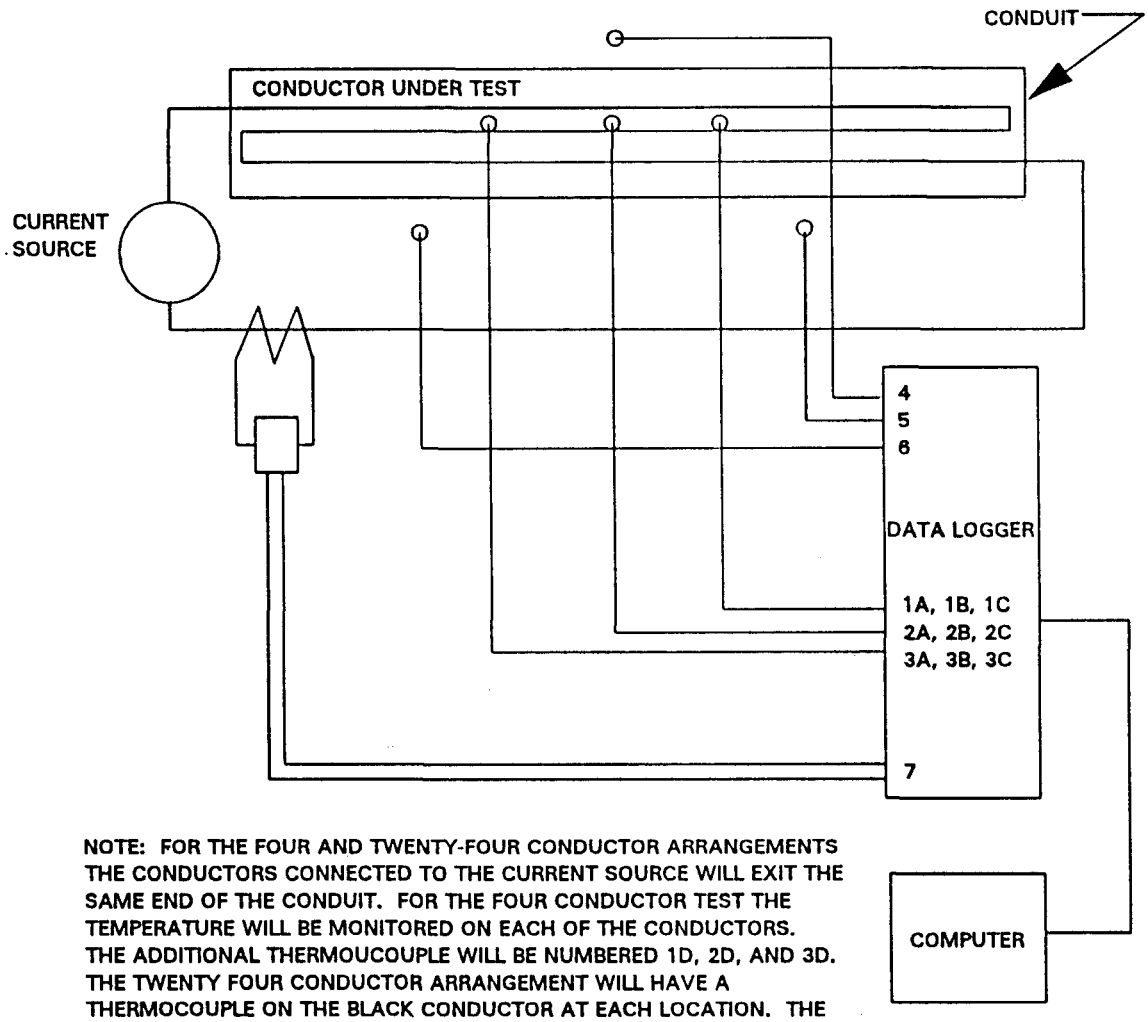

NOTE: FOR THE FOUR AND TWENTY-FOUR CONDUCTOR ARRANGEMENTS THE CONDUCTORS CONNECTED TO THE CURRENT SOURCE WILL EXIT THE SAME END OF THE CONDUIT. FOR THE FOUR CONDUCTOR TEST THE TEMPERATURE WILL BE MONITORED ON EACH OF THE CONDUCTORS. THE ADDITIONAL THERMOUCOUPLE WILL BE NUMBERED 1D, 2D, AND 3D. THE TWENTY FOUR CONDUCTOR ARRANGEMENT WILL HAVE A THERMOCOUPLE ON THE BLACK CONDUCTOR AT EACH LOCATION. THE EIGHT 3/CONDUCTOR, 3 PHASE ARRANGEMENT WILL HAVE A THERMOCOUPLE ON THE BLACK CONDUCTOR AT EACH LOCATION. THE ADDITIONAL THERMOCOUPLES WILL BE NUMBERED 1D THROUGH 1H, 2D THROUGH 2H, AND 3D THROUGH 3H.

REV 4

INPUTS 1, 2, AND 3 WILL BE AVERAGED AND USED TO CALCULATE LINEAR REGRESSION. EACH ARRANGEMENT WILL HAVE THERMOCOUPLES INSTALLED AS DESCRIBED ABOVE. THIS WILL YIELD A TOTAL OF 9 TEMPERATURES (12 ON 4 COND., 24 ON 24 COND., AND 24 ON THE EIGHT 3/CONDUCTOR, 3 PHASE) TO BE AVERAGED. THE SLOPE OF THE LINE MUST BE LESS THAN THE ABSOLUTE VALUE OF 0.2. INPUTS 4, 5, AND 6 WILL BE AVERAGED FOR ROOM TEMPERATURE 40 DEG C +/- 2 DEG C. INPUT 7 IS THE CURRENT MEASURED IN THE CIRCUIT BY MEANS OF A CURRENT TRANSFORMER AND CURRENT TRANSDUCER. THREE CURRENT SOURCES AND THREE CURRENT TRANSFORMERS AND CURRENT TRANSDUCERS WILL BE USED FOR THE THREE PHASE CIRCUIT.

C:\FL\CINDY\9305014.DWG

THERMOCOUPLE LOCATIONS

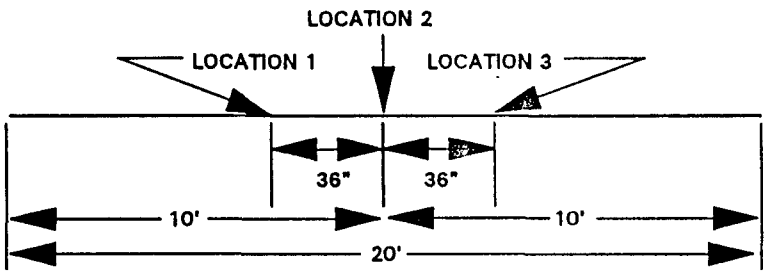

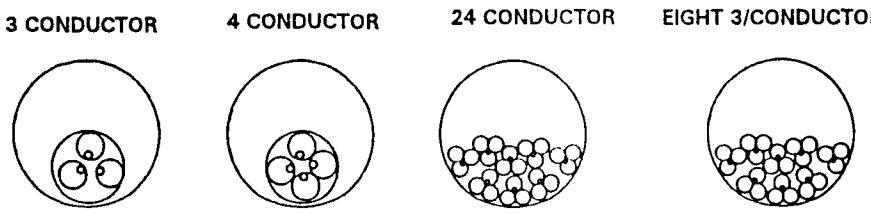

REV 4

THERMOCOUPLE GOES ON THE CONDUCTORS - ONE ON EACH CONDUCTOR AT EACH LOCATION FOR THE 3 AND 4 CONDUCTOR ARRANGEMENTS, ONE ON THE BLACK CONDUCTOR AT EACH LOCATION FOR THE 24 CONDUCTOR ARRANGEMENT, AND ONE ON THE BLACK CONDUCTOR AT EACH LOCATION FOR THE EIGHT 3/CONDUCTOR 3 PHASE ARRANGEMENT.

REV 4

ENCLOSURE WALLS A MINIMUM OF 18 INCHES FROM THE SUPPORTS
SUPPORTS LOCATED 5 FEET FROM EACH END.

C:\FL\CINDY\9305011.DWG

ATTACHMENT B

LINEAR REGRESSION METHOD

As an example of the least-squares technique, consider the conduit in Attachment A, page A-1. At each sampling time, an average temperature of all thermocouples will be calculated. This value will then be added to the top of an array large enough the hold 60 minutes worth of these averages, and the oldest value discarded. A linear regression fit is then performed on the array and presented on the video screen to the operator. When the next data sampling is completed, the entire process is repeated, thus yielding a linear regression fit of the data from the previous 60 minutes. As each new data point is added to the array, all previous ones are shifted down on time increment until each is finally discarded due to the fixed size of the array.

$$Y = mX + b \qquad \overline{X} = \sum X/n \qquad \overline{Y} = \sum Y/n$$

$$m = \frac{\sum XY - \frac{\sum X \sum Y}{n}}{\sum X^2 - \frac{(\sum X)^2}{n}}$$

$$b = \overline{Y} - m\overline{X}$$

WHERE:

X = AVERAGE CONDUCTOR TEMPERATURE (DEG C)

Y = TIME INCREMENT (MIN)

M = SLOPE OF LINE(DEG C/MIN)

B = Y-AXIS INTERCEPT 9DEG C)

C:\FL\CINDY\9305016.DWG

ATTACHMENT C

DRAFTS 11 AND 12 OF IEEE P848 AND EXCEPTIONS TO DRAFT 11

ATTACHMENT 2

April 6, 1992

P848/D11

PROCEDURE FOR THE DETERMINATION OF THE AMPACITY DERATING OF FIRE PROTECTED CABLES

Prepared by Task Group 12-45
of the Test and Measurements Subcommittee #12
of the IEEE Insulated Conductors Committee

All rights reserved by the Institute of Electrical and Electronics Engineers, Inc.

At the time this draft was completed, the Task Group on Procedure for the Determination of the Ampacity Derating of Fire Protected Cables had the following membership.

A.K. Gwal, Chairman

T. J. Al-Hussaini
P. Bhatia
E. A. Capouch
E. J. Coffey
E. J. D'Aquanno
R. Das
J. Daly
P. J. Finnerty
J. B. Gardner
P. A. Giaccaglia
A. Hiranandani
C.V. Johnson
A.E. Kollar
R. G. Koza
R. Licht
J. E. Merando, Jr.
K. W. Prier
D. N. Priest
B. E. Reagan
G. A. Remaley
P. D. Skelly
M. Spurlock
W. Torok
J. R. Tuzinski
F. W. Van Nest
T. A. Venkataraman
J. G. Waligorski

Other individuals who have contributed are:

K. W. Brown
D. C. Gasda

PROCEDURE

for the Determination

of the

AMPACITY DERATING OF FIRE PROTECTED CABLES

DRAFT 11

April 1992

INTRODUCTION

Many installations incorporate individual or grouped cables which do not limit the flame propagation under fire conditions. This deficiency can be attributed to conventional cable constructions, such as polyethylene insulated PVC jacketed control cables; which were popular in the sixties and early seventies. Such cables do not meet the flame spread criteria when subjected to the vertical tray flame test which has been accepted in one form or another. Other installations which fall in the same category include metal sheathed or armored vertical shaft cables with overall polyethylene jacket and secured with clamps at various intervals. Polyethylene jacket is used because of its high resistance to creep under pressure in the clamp area to support the sheer weight of the cable.

The foregoing installations include industrial, commercial, marine, nuclear or fossil generating stations and others.

To retard the flame propagation properties of cables in cable trays, protective coatings are applied either along the entire length of the cable(s) or in certain sections as deemed necessary. The flame retardant coatings may be in a form of tapes, blankets, liquids or mastics applied to individual or to grouped cables, both for retrofitting existing installations or for new installations.

1. PURPOSE

The purpose of the standard is to provide a test procedure which may be used to determine the ampacity derating required for fire protected cables in conduit, in penetrations (fire stop) and in cable tray systems.

2. SCOPE

This standard provides a detailed procedure for determining the ampacity derating required for fire protected cable systems. The tests are intended to be used to determine the ampacity derating of fire protected systems which is to be applied to the ampacity of cables determined by standard methods such as ICEA P-46-426 Power Cable Ampacity Volumes 1 & 2, and ICEA P-54-440 Cables in Open-top Cable Trays.

2.1 General

The procedure presented in this standard includes the principles and methods of testing. This test procedure will provide the ampacity derating of a fire protected cable system.

2.2 Applicability

Fire protected cable systems outlined herein are intended for use in power generating stations, both nuclear and fossil, as well as other applicable commercial and industrial installations, both outdoors and indoor. The categories of cables include, but are not limited to: power, control, and instrumentation including signal and communication cables. Testing of flame retardant coatings on horizontal cables will qualify the coatings for all orientations. The tests as described herein are intended to be used in determining the derating factor, which may be required for fire protected cables in conduits and trays. The ampacity of the cable in raceway will typically have first been determined using accepted practices such as ICEA P-46-426 Power Cable Ampacities Volumes I and II, and ICEA P-54-440 Cables in Open-Top Cable Trays.

The user of flame retardant coatings is cautioned to determine that the coating is compatible with the cable materials with which it comes in contact and with the environment in which it is installed. The user may specify tests in addition to those specified in this standard to reflect the installation conditions, e.g., for nuclear stations, the user may wish to add irradiation test or effects of added weight; or for outdoor installations, the user may wish to add a U.V. resistance test.

3. DEFINITIONS

These definitions establish the meanings of words in the context of their use in this standard.

Fire Protected Cable Systems

Cable systems to which an application of a flame retardant barrier, fire resistive barrier or coating (flame retardant coating) to protect cables from fires from any cause has been applied.

Flame Retardant Coatings

A material applied to a completed cable or assembly of cables to prevent the propagation of flame when exposed to a flame source. Flame retardant coatings include tapes, blankets, liquids, flame retardant mechanical system or mastics.

Passive Fire Protection Systems

Systems which embody fire resistant construction such as coatings, barriers, walls, and penetrations (fire stops) as opposed to water sprinkler systems or gaseous extinguishing systems.

Through-Penetration Fire-stop

A specific construction of devices, fill materials, or both, designed to resist the penetration of fire through those openings in fire resistive floors or walls that are intended to accommodate electric cables, raceways and mechanical service penetrations.

Ampacity Derating Factor

A factor applicable to the ampacity rating of a cable (or other device) to account for the adverse affects of some installation or environmental condition.

Raceway

Any channel that is designed and used expressly for supporting or enclosing wires, cables, or bus bars. Raceways consist primarily of, but are not restricted to, cable trays and conduits.

Cable Tray

A continuous rigid structure used to support cables. Cable trays include ladders, troughs, channels and other similar structures. Conduits are not included in this category.

Enclosures

A surrounding case or housing used to protect the contained equipment and prevent personnel from accidentally contacting live parts.

4. REFERENCES

The following standards were used as references in preparing this standard and may be useful in the interpretation of its meaning:

ICEA P-46-426/IEEE S-135
Power Cable Ampacities, Vols. 1 and 2. Dated 1962 (Reprinted in 1984).

ICEA P-54-440/NEMA WC-51
Ampacities - Cable in Open Top Cable Trays. Dated 1986.

5. TEST DESCRIPTION

5.1 General

This section describes the method for determining ampacities of cable passing through single tray and conduit with and without a passive fire protection system.

5.1.1 Applicability

This method shall be applicable to a single cable or groups of cables enclosed in a passive fire protection system. Cables may be contained in a raceway or as dictated by the actual installation.

5.1.2 Method of Testing

Ampacity derating for cables of a passive fire protective system shall be by testing. Testing shall be performed using the configurations depicted in Figures 1 and 2. As an alternative, tests may be performed using representative assembly which can be analyzed to show its applicability to actual installed conditions. Results are also applicable for 1000 volts and higher rated cables.

5.2 Test Specimens

5.2.1 Cable Selection

The cable to be utilized is chosen as one which is representative of a wide range of cables. The selection of a 3 conductor cross link polyethylene insulated, #6 AWG 600 volts copper cable with an overall chlorosulfonated polyethylene (i.e. hypalon) jacket was chosen as representative.

5.2.2 Cable Fill

Cable fill is the ratio of cable area to the inside area of the tray expressed in percentage. A 40 percent cable fill, as determined from actual measurement shall be used for cable trays.

5.2.3 Cable Layout

The length of both the conduit and the tray shall be twelve feet. One to two feet of cable shall extend out each end and shall be wrapped with unfaced fiberglass blanket insulation (or electrically-heated tape) as necessary to eliminate heat flow out of raceway ends.

5.2.4 Conduit

The conduit system shall be 4 inch and 1 inch steel rigid conduit, 12 feet long supported every 18 inches from each end by a horizontal piece of "H"-shaped or 2" x 2" square structural tubing.

5.2.5 Tray

The tray shall be a 4 inch deep, 24 inch wide ladder-back steel cable tray 12 feet and support similarly to the conduit system. The tray and conduit systems, if tested together, must be at least 36 inches apart along their lengths.

5.2.6 Through-Penetration Fire-stops

A through-penetration fire-stop intended for installation in a fire resistive floor assembly, wall assembly, or both, is to be installed in a wall section so that the electrical cables pass horizontally through the wall. The through-penetration fire-stop is to be installed in

accordance with all requirements specified for the fire-stop being tested.

The sample wall section is to be representative of that specified for the through-penetration fire-stop. The thickness of the wall section is to be equal to the maximum thickness of the fir-estop system or device. The size of the through opening in the wall section is to be representative of the through opening size specified for the through-penetration fire-stop.

The fire protective system is to be installed around the electrical cable(s) and raceway(s) in accordance with all requirements specified for the system.

5.3 Test Facility

5.3.1 Test Room

The ampacity test shall be conducted in an enclosure as defined in Figure 3. The test specimen shall be suitably enclosed such that temperature around the specimen shall be controlled at the test temperature of 40°C±2°C. The enclosure surrounding the test specimen shall be of even temperature, but must not cause drafts on the test specimen. The temperature inside the enclosure shall be measured at no less than three places one foot from the specimen, and in the horizontal plane of the test specimen. The temperature of the enclosure shall be taken as the average of the steady state measurements.

5.3.2 Cable Installation

5.3.2.1 Tray

The tray is to be loaded with three conductor #6 AWG, 3/c copper cable, with an overall chlorosulfonated polyethylene jacket. The tray fill should be based on 40 percent fill.

Tray cables should be installed in an orderly, symmetric manner, so as to limit the flow of air through the bundle, and to facilitate inter and intra-laboratory repeatability of these tests. The cables shall be connected as a single series electrical circuit, which contains all conductors in the system. The tray is to be supported by two horizontal pieces of "H"-shaped or a suitable support system, located as shown in Figure 3. A 3" x 25" piece

THIS PAGE IS INSERTED INTO REVISION 4 OF TEST PLAN 93-0501 TO CORRECT NUMBERING OF ATTACHMENT C. THE PAGES IN ATTACHMENT C OF THIS TEST PLAN ARE INCORRECTLY NUMBERED IN ALL REVISIONS PREVIOUS TO REVISION 4

of 1" thick mineral fiber blanket shall be placed between the tray and support system to form a thermal break. Thermal insulation (e.g., fiberglass or electrically-heated tape) shall be wrapped around the cable which extends out of both ends of the tray to allow adjustment of end temperatures. The end temperatures must be adjusted such that the average values for the thermocouples at locations 1 and 3 are within 4°C of the average for location 2 to minimize axial heat flow.

5.3.2.2 Conduit

Since the application of the fire protection system may result in differing derating for different conduit sizes, two sizes of conduits shall be tested:

(a) 1 inch rigid steel conduit with one 3/c No 6 AWG copper cable

(b) 4 inch rigid steel conduit with one 3/c, 750 Kcmil copper cable

Derating for both sizes shall be reported. Lowest factor shall be used for ampacity derating. The bundle shall be instrumented with thermocouples as shown in Figure 2, tied with wraps every 2 feet, and pulled into position in the conduit. The cables shall be connected as a single series electrical circuit, which contains all conductors in the system. The conduit is to be supported by two horizontal pieces of "H" shaped or 2" x 2" structural square tubing with a minimum of 36 inches clearance from the tray or walls of the enclosure. The attachment points between the conduit and the supporting beam are to be insulated with 1" thick mineral fiber blanket to form a thermal break similar to the tray system. Insulation (or electrically-heated tape) shall be wrapped around the cable which extends out of both ends of the conduit to allow adjustment of end temperatures. The end temperatures must be adjusted such that the average values for the thermocouples at locations 1 and 3 are within 4°C of the average for location 2, to minimize axial heat flow. In other words, the ends should be close to the same temperatures as the middle, thereby minimizing axial heat flow.

5.3.2.3 Through-Penetration Fire-stops

The electrical cable(s) and raceway(s) penetrating the sample wall section are to be representative of those specified for the through-penetration fire-stop and are to be of sufficient length to project a minimum of 24 inches beyond both sides of the wall section. For this purpose maximum thickness of fire-stop shall be measured. Thermocouples on the electrical cables in through-penetration fire-stops are to be located so that temperatures are measured in the interior of the fire-stop and at the fire-stop mid-depth as in figure 5.

5.3.2.4 Orientation

The test specimens shall be mounted and the tests run in the horizontal direction so as to eliminate any possibility of a "chimney-effect" which could cause air movement within the system.

5.3.2.5 Thermocouple Placement

Thermocouples (24 gage, Type K [Special Grade] Chromel-Alumel, accuracy ±1.15°C) shall be installed by slitting the cable insulation and jacket and placing the thermojunction in intimate physical contact with the conductor strands, as illustrated in Figure 4. The cable shall then be restored as closely as possible to its original condition, and the slit sealed with a single-layer spiral wrap of electrical tape. Since the test is evaluating the temperature at the hottest position, rather than the average of all thermocouples, the cables within the bundle have been instrumented, instead of those near the outside. For both the conduit and tray systems, thermocouples shall be placed at each of three vertical planes along their lengths, as illustrated in Figures 1 and 2. The tray system shall be instrumented with 13 thermocouples at each plane, for a total of 39 thermocouples, and the conduit system shall be monitored with 1 thermocouple at each plane, for a total of 3 thermocouples.

5.3.2.6 Installation of Passive Fire Protection Systems

The tray and/or conduit is to be lifted off it's support after the completion of the baseline test, the passive fire protective system applied in accordance with the manufacturer's instructions, and the entire assembly lowered onto the horizontal

support, thereby minimizing any heat sink effect from the support system. After installation, the passive fire protection system shall be allowed to equilibrate (or cure) to a state of constant moisture content, if applicable. Moisture content (in terms of percent moisture) shall be taken 4 hours or less before the test is begun and within 4 hours after completion of the test, using either a hand-held moisture meter, or standard 120°C oven-dry methods). Such moisture determination is to be made on the top and bottom exterior surfaces of both the tray and conduit systems at their mid-length, and the results of top and bottom averaged.

5.4 Test Procedure

5.4.1 Baseline Evaluation

At least one baseline experiment for each system (conduit and tray) using Sections 5.4.2, 5.4.4, and 5.4.5 shall be conducted to establish the cable ampacity prior to application of the fire protective system. The ampacity value measured should be compared to the IEEE-ICEA Power Cable ampacities standards.

5.4.2 Current

The circuit shall be energized with 60 Hz, single phase alternating current sufficient to reach a steady-state temperature of 90°C at the hottest single point monitored at location 2 (see Figures 1 & 2). The current values measured shall be reported to the nearest 0.1 ampere. The use of a constant-current amplifier is highly recommended as a power source, since the increasing temperatures of the conductor circuit cause resistance changes. Alternatively large variable transformers may be used, with constant readjustment to maintain a set current flow.

5.4.3 Temperature Measurement

All temperatures shall be recorded at intervals no greater than 1 minute. The current in each test circuit shall be adjusted so as to give an equilibrium temperature of 90°C±1.1°C at the hottest point monitored within location #2 (those located at the center of the system). The average temperatures of thermocouple locations #1 and #3 shall be within ±4°C of the average of thermocouple location #2. Each cable circuit shall be

considered to be in steady state condition when a three-hour period has elapsed since any perturbation of the system occurred (current adjustment, box temperature change, additional insulation placed on ends, etc.) and the rate of change of the average of all monitored conductor temperatures in that circuit does not exceed ±0.55°C for the conduit[1] and ±0.35°C for tray[1]. Re-adjustment of the current flow to a circuit in order to maintain a given amperage value is not to be considered a perturbation.

In order to statistically assure thermal equilibrium, the conductor temperatures should be averaged at each sampling period and a linear regression analysis (least-squares fit) performed on the data obtained from that and all other averages taken over the preceding 60 minute period. The slope of the line obtained will be in units of °C/hour. As soon as the absolute value of the slope of these data becomes less than 0.55 (conduit) or 0.35 (tray), equilibrium has been reached. The degrees of freedom obtained by averaging many thermocouple locations (3 for conduit, 39 for tray), allows the precision to exceed the ±1.1°C limit of any one thermocouple. The only practical method of obtaining the required accuracy in determining thermal equilibrium is through the use of computerized data retrieval.

As an example of the least-squares technique, consider the tray system in Figure 1. At each sampling time, an average temperature of thermocouples 1 through 39 will be calculated. This value will then be added to the top of an array large enough to hold 60 minutes worth of these averages, and the oldest value discarded. A linear regression fit is then performed on the array and presented on the video screen to the operator. When the next data sampling is completed, the entire process is repeated, thus yield a linear regression fit of the data from the previous 60 minutes. As each new data point is added to array, all previous ones are shifted down one time increment, until each is finally discarded due to the fixed size of the array.

[1] Chosen as the 95% confidence limits for Special Grade, Type K thermocouples at 90°C.

LINEAR REGRESSION (LEAST SQUARES METHOD) FIT:

$$Y = mX + b \qquad \overline{X} = \Sigma X/n$$

$$\overline{Y} = \Sigma Y/n$$

$$m = \frac{\Sigma XY - \frac{\Sigma X \Sigma Y}{n}}{\Sigma X^2 - \frac{(\Sigma X)^2}{n}}$$

$$b = \overline{Y} - m\overline{X}$$

Where:

Y = Average Conductor Temperature (°C)
X = Time Increment (min)
m = Slope of line (C/min)
b = Y-Axis intercept (°C)

5.4.4 Enclosure Temperature

The temperature within the test enclosure shall be controlled to 40°C ±2°C. Some induced air movement within the enclosure is necessary to achieve uniform steady-state temperatures, but care must be taken to avoid direct air currents against the test specimens. Method of ambient temperature control within the test enclosure is important and care must be taken to avoid any additional heat loading on the cables by radiation from heat source.

6. EVALUATION OF TESTS

By a simple comparison of the baseline and test specimen ampacities, a derating factor can be calculated.

Data Interpretation: Ampacity Derating Factor

The maximum current carrying capacity shall be determined by derating applied as dictated by the test. The derating factor as determined by the test is to be calculated as follows:

% Ampacity Derating Factor = $(I_0 - I_f)/ I_0 \times 100$

Where:

I_0 = Current in amperes required to attain a temperature of 90 °C for the baseline (un-protected) system. However, if I_0 is larger than published ampacity i.e. ICEA P-46-426, P-54-440 then published ampacity shall be used for I_0.

I_f = Current in amperes required to attain a temperature of 90 °C for the system as protected by the passive fire protection system.

7. DOCUMENTATION OF TESTING

Following the procedure outlined in this standard, provide percentage ampacity derating and record the following specific data.

- Description of cables and raceway, if different from specified herein.
- All thermocouple data
- All current and voltage values
- Current and conductor temperature values observed at equilibrium
- Weight of passive fire protection system (lb/ft)
- Average thickness of fire protective system (inches)
- Details of installation of fire protective system

The documentation of records shall be provided in the form of a FINAL REPORT. The report shall contain for permanent record all information pertaining to the test including the Test Plan, laboratory notebook, all raw data, interpretations, and observations. The report shall provide the documentation of all the above parameters and evidence of calibration to NIST standards for equipment used in obtaining this data (including before and after calibration of thermocouples), and appropriate resolution of any test anomalies. All calculations, conclusions or interpretations shall have been checked and approved by authorized individuals certified by the testing organization to be knowledgeable of the techniques used.

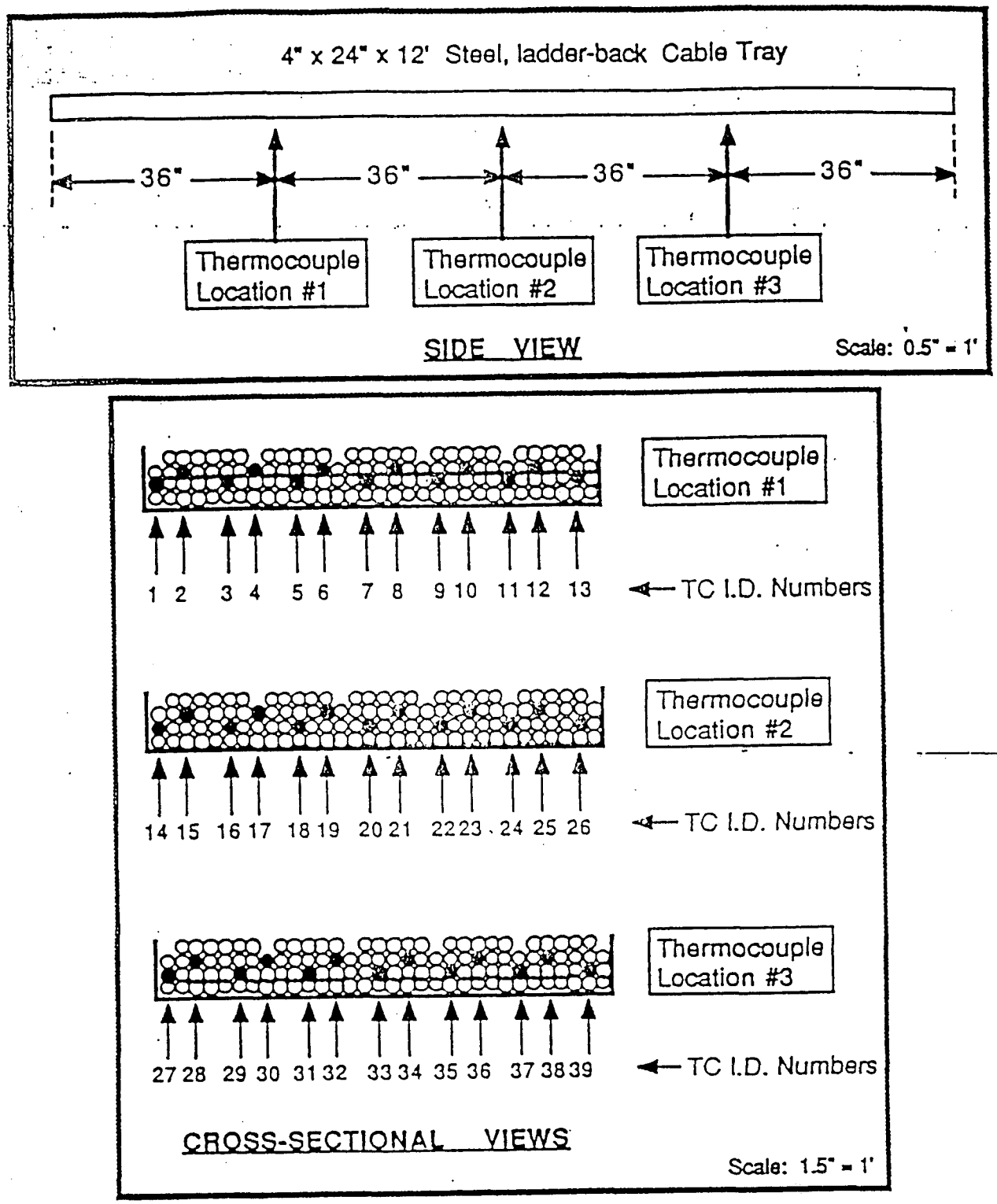

NOTE: Cable tray is to be 100% visual-fill with 3 Conductor #6 AWG Cable. Number of cables = 122. Cable diameter = 0.75 inch.

TRAY AMPACITY DESIGN

Figure 1

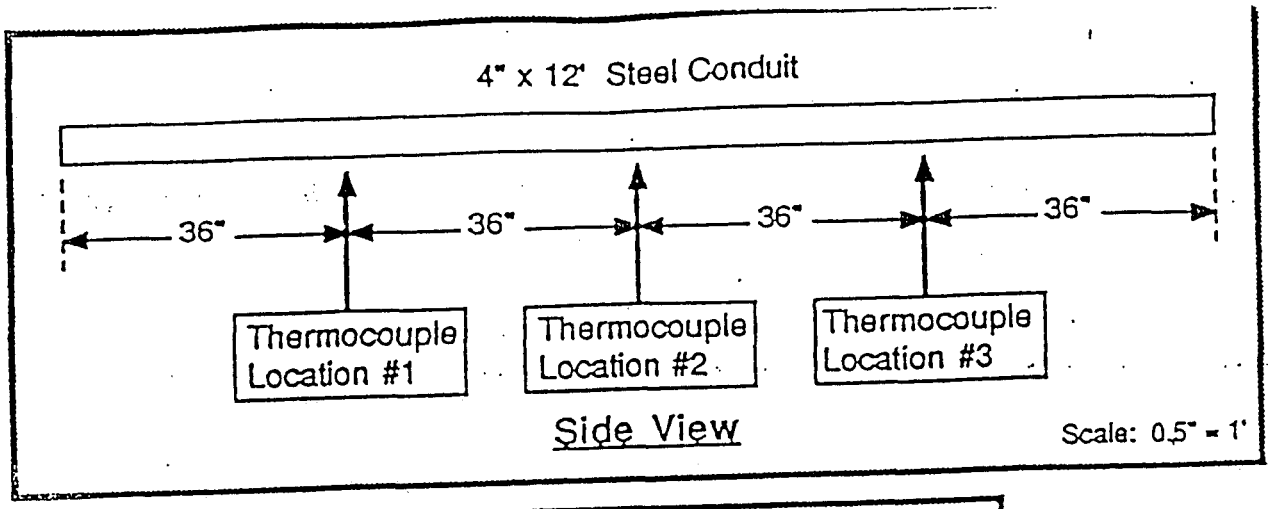

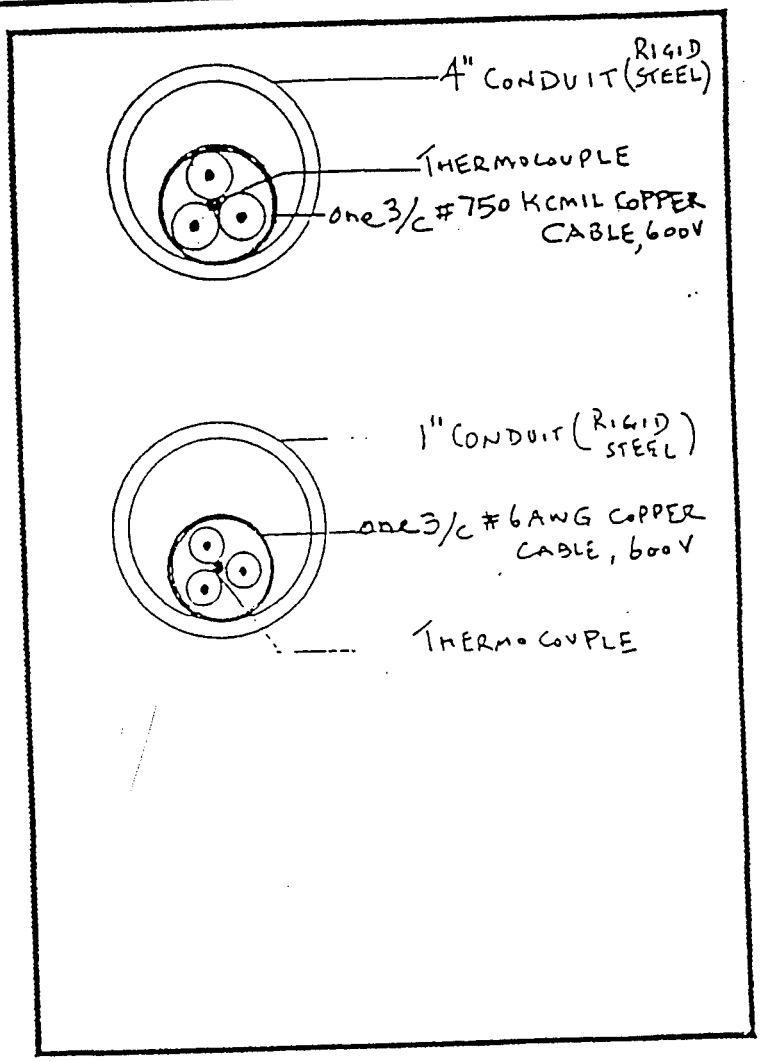

CONDUIT AMPACITY DESIGN

Figure 2

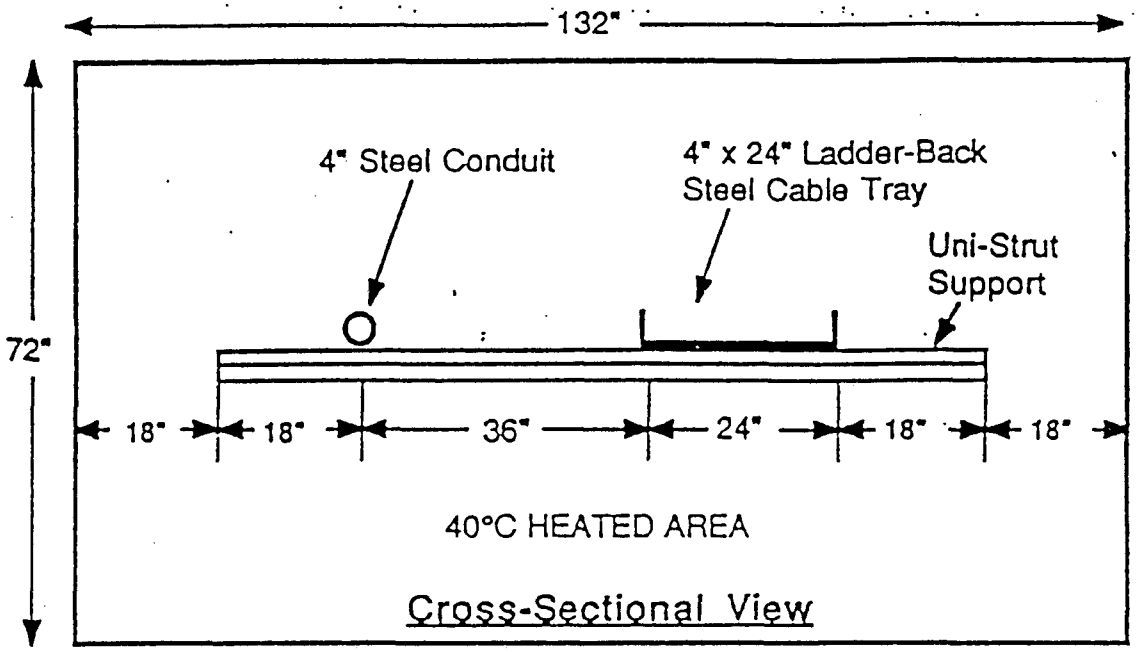

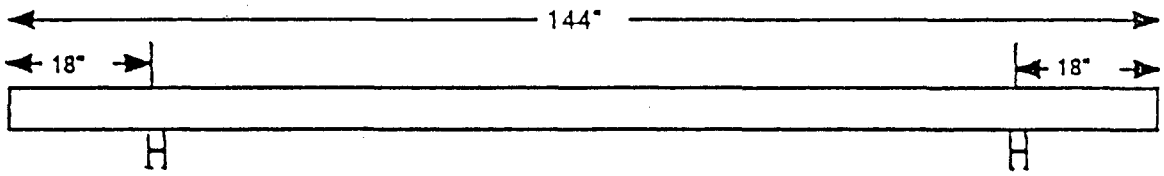

Conduit & Tray Support Points

CONDUIT AND TRAY AMPACITY DESIGN

Figure 3

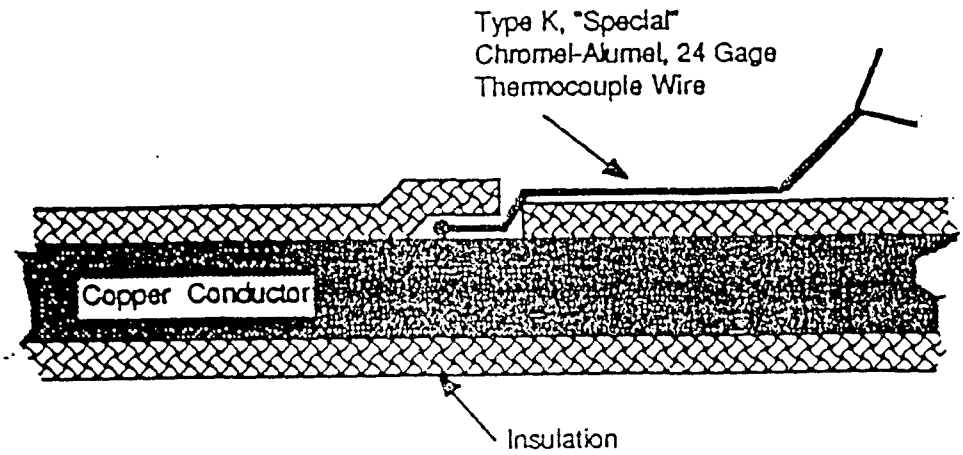

NOTE:

To attach thermo-junction to copper conductor, make an approximately 2 inch long slit in the outer wrap, expose the three conductors, locate the conductor to be instrumented, make a 1 inch slit in the insulation and insert the thermocouple junction in contact with the strands. Close the slit, reposition the wouter wrap and seal with a spiral wind of a single layer of glass-reinforced electrical tape.

Figure 4

P 848/D12 February 24, 1993

IEEE STANDARD

PROCEDURE FOR THE DETERMINATION OF THE

AMPACITY DERATING OF FIRE PROTECTED CABLES

Sponsor

Insulated Conductors Committee of the

IEEE Power Engineering Society

Prepared by Task Force 12-45 of
Test and Measurements Subcommittee No. 12 of
Insulated Conductors Committee

Copyright 1993 by the Institute of Electrical and Electronics
Engineers, Inc.
345 East 47th Street
New York, NY 10017, USA
All rights reserved.

This is an unapproved draft of the proposed IEEE Standard, subject to change. Permission is hereby granted for IEEE Standards Committee participants to reproduce this document for purposes of IEEE standardization activities. Permission is also granted for member bodies and technical committees of ISO and IEC to reproduce this document for purposes of developing a national position. Other entities seeking permission to reproduce this document for standardization or other activities, or to reproduce portions of this document for these or other uses, must contact the IEEE Standards Department for the appropriate license. Use of information contained in this unapproved draft is at your own risk.

IEEE Standards Department
Copyright and Permissions
445 Hoes Lane, P.O. Box 1331
Piscataway, NJ 08855-1331, USA

Foreword

(This Foreword is not a part of IEEE Std. P 848/D12, IEEE Standard - Procedure for the Determination of the Ampacity Derating of Fire Protected Cables)

Many cable installations in nuclear and fossil fuel generating stations require the installation of fire stop, fire protective materials, coating, and electrical separation wrap materials over the cables or the raceway for fire protection or electrical separation purposes. 10CFR50 Appendix R for nuclear plants may require some electrical circuits enclosed in a fire protective material. IEEE 634-1976 specifies requirements for cable penetration fire stops at fire rated walls and floors. Compliance with IEEE 384-1992 may require installation of a wrap material over free air-drop cables or solid covers on cable trays.

Building codes for commercial and industrial facilities in some states require power cables, used in emergency power systems, to remain functional during a fire exposure. This may also necessitate the use of the fire protective material.

As discussed in IEEE 422 and IEEE 690, utility generating stations use cable ampacities provided in ICEA P-46-426 for conduits, spaced cable tray installations and duct bank installations. ICEA P-54-440 is used for cable installation in random filled open-top trays. Commercial, industrial and non-utility owned generating stations utilize cable ampacities published in NFPA-70 (National Electric Code). The National Electric Code permits the use of ICEA P-46-426 and ICEA P-54-440 under the direction of engineers

Fire-protection related products may reduce the heat transfer characteristics associated with the ampacities provided in ICEA P-46-426 and ICEA P-54-440. In future revisions, these ampacity standards may incorporate these new installation conditions on cable ampacity. Not all products, however, may be covered by changes in the ampacity standards due to their limited use to the generating station market. Hence, ampacity testing to determine ampacity derating of fire protected cable systems is necessary.

Several analytical cable ampacity methods are listed in the bibliography to address fire stops, tray enclosure materials, and cable wrap material. The user may consider the applications of these analytical methods to avoid testing of minor differences in the installation of a given product.

Copyright © 1993 IEEE. All rights reserved
This is an unapproved IEEE Standards Draft, subject to change

This standard was prepared by the Task Group on Procedure for the Determination of the Ampacity Derating of Fire Protected Cables, Subcommittee on Tests and Measurements, Insulated Conductors Committee. The membership of the working group during the preparation of this draft was:

A.K. Gwal, Chair
J.L.White, Vice Chair

T.J. Al-Hussaini
P.Bhatia
K.Brown
E.A.Capouch
E.J.Coffey
E.J.D'Aquanno
J.Daly
P.A.Giaccaglia
A.Hiranandani
A.E.Kollar
R.Licht
J.E.Merando
K.A.Petty
K.W.Prier
D.N.Priest
P.D.Skelly
M.Spurlock
W.Torok
F.W.Van Nest
J.G. Waligorski

Copyright © 1993 IEEE. All rights reserved
This is an unapproved IEEE Standards Draft, subject to change

TABLE OF CONTENTS

Section		Page
1	Overview	7
	1.1 Purpose	7
	1.2 Scope	7
2	References	8
3	Definitions	9
4	Test Description	9
	4.1 General	9
	4.1.1 Applicability	9
	4.1.2 Method of Testing	10
	4.2 Test Specimens - Protected Cable Systems	10
	4.2.1 Cable Selection	10
	4.2.2 Cable Fill	10
	4.2.3 Conduit	10
	4.2.4 Tray	11
	4.2.5 Free-Air Drop	11
	4.2.6 Fire Protective Material	11
	4.3 Test Specimens - Cable Penetration Fire Stop	11
	4.3.1 Cable Selection	11
	4.3.2 Cable Fill	12
	4.3.3 Conduit	12
	4.3.4 Tray	12
	4.3.5 Floor/Wall Assembly	12
	4.3.6 Fire Stop Design	12
	4.4 Test Facility	13
	4.4.1 Test Enclosure	13
	4.4.2 Test Specimen Installation	13
	4.4.2.1 Tray	13
	4.4.2.2 Conduit	13
	4.4.2.3 Free-Air Drop	13
	4.4.2.4 Cable Penetration Fire Stops	14
	4.4.2.5 Orientation	14
	4.4.2.6 Installation of Fire Protective Systems	14
	4.4.3 Thermocouple Selection and Placement	14
	4.5 Test Procedure	15
	4.5.1 Baseline Evaluation	15

Copyright © 1993 IEEE. All rights reserved
This is an unapproved IEEE Standards Draft, subject to change

4.5.2 Current Source 15
4.5.3 Temperature Measurement 15
4.5.4 Enclosure Temperature 17

5 Evaluation of Test Results 23

5.1 Normalizing Test Results 23

5.2 Ampacity Derating Factor 23

6 Documentation of Testing 24

7 Bibliography 25

Copyright © 1993 IEEE. All rights reserved
This is an unapproved IEEE Standards Draft, subject to change

TABLE OF CONTENTS (cont)

Section | Page

FIGURES

FIG 4-1 Tray Configuration - Protective Cable System 18
FIG 4-2 Conduit and Free-Air Drop Configurations - Protective Cable System 19
FIG 4-3 Configuration- Cable Penetration Fire Stop 20
FIG 4-4 Enclosure and Support Requirements 21
FIG 4-5 Thermocouple Attachment to Conductor 22

Copyright © 1993 IEEE. All rights reserved
This is an unapproved IEEE Standards Draft, subject to change

1 Overview

1.1 **Purpose.** The purpose of this standard is to provide a test procedure for use in establishing the ampacity or ampacity derating factor for cables installed in fire protected conduits, trays, or free air-drops, cable penetration fire stops, or electrical separation wrap systems.

1.2 **Scope.** This standard provides a detailed test procedure for determining the ampacity or derating factor in the following cable installation configurations:

(1) Block-out or sleeve type cable penetration fire stops.

(2) Conduits covered with a protective material.

(3) Tray covered with a protective material.

(4) Tray directly covered or coated with a fire-retardant material.

(5) Free-air drops enclosed with a protective material.

The standard is applicable to cables installed and sized to ICEA P-46-426 for conduits and free air drops, and ICEA P-54-440 for cable tray. ICEA P-46-426 does provide ampacities for cables in a tray with a fixed spacing and may be used for cable penetration fire stop configurations only.

This standard does not endorse the use of or provide application guidance for the installation of cable penetration fire stops and fire protective materials. Cable designs are available which can withstand and remain functional during direct exposure to a fire. The user should refer to IEEE 634 for the qualification requirements of cable penetration fire stops.

Copyright © 1993 IEEE. All rights reserved
This is an unapproved IEEE Standards Draft, subject to change

2 References

ANSI-IEEE Std 100-1990, Standard Dictionary of Electrical and Electronics Terms 4th Edition.

Cross-Linked Thermosetting Polyethylene-Insulated Wire and Cable for the Transmission and Distribution of Electrical Energy. Washington, D.C.: National Electrical Manufacturers Association, 1990. ICEA S-66-524 (NEMA WC 7-1988).

Ethylene Propylene Rubber-Insulated Wire and Cable for the Transmission and Distribution of Electrical Energy. Washington, D.C.: National Electrical Manufacturers Association, 1989. ICEA S-68-516 (NEMA WC 8-1988).

ICEA Standard for Power Cable Ampacities. Washington, D.C.: National Electrical Manufacturers Association, 1962. Reprinted by IEEE under S-135. ICEA P-46-426.

ICEA Standard for Ampacities - Cables in Open-Top Cable Trays. Washington, D.C.: National Electrical Manufacturers Association, 1991; NEMA WC-51. ICEA P-54-440.

IEEE Std. 384-1992, IEEE Standard Criteria for Independence of Class 1E Equipment and Circuits.

IEEE Std. 422-1986, IEEE Guide for the Design and Installation of Cable Systems in Power Generating Stations.

IEEE Std. 690-1984, IEEE Standard for the Design and Installation of Cable Systems for Class IE Circuits in Nuclear Power Generating Stations.

IEEE Std. 634-1978, IEEE Standard Cable Penetration Fire Stop Qualification Test.

Rubber-Insulated Wire and Cable for the Transmission and Distribution of Electrical Energy. Washington, D.C.: National Electrical Manufacturers Association, 1980. ICEA S-19-81 (NEMA WC 3-1980).

The National Electric Code, National Fire Protection Association, NFPA 70-1990, Quincy, MA.

Copyright © 1993 IEEE. All rights reserved
This is an unapproved IEEE Standards Draft, subject to change

3 Definitions

3.1 ampacity derating factor: A numeric value representing the fractional reduction from a base ampacity cable rating. Ampacity derating factors are associated with specific installation conditions not presently addressed in the base ampacity.

3.2 ampacity correction factor: A numeric value equal to one minus the ampacity derating factor.

3.3 cable penetration fire stop: Material, devices or an assembly of parts providing ;cable penetrations through fire-rated walls, floors, floor-ceiling assemblies, and maintaining required fire rating.

3.4 cable tray: A raceway resembling a ladder and usually constructed of metal. Other styles of trays include solid-bottom, and channel type.

3.5 fire protected cable systems: Cable systems to which a fire protective enclosure material has been applied either in direct contact with the cables or applied over the raceway to protect cables from fire.

3.6 fire retardant coatings: Material applied along the length of cables or in localized areas, as deemed necessary, to retard the flame propagation properties of cables in trays.

3.7 raceway: Any channel that is designed and used expressly for supporting or enclosing wires, cable or bus bars. Raceways consist primarily of, but are not restricted to, cable trays and conduit.

4 Test Description

4.1 General

4.1.1 Applicability This method shall apply to cables manufactured in accordance with either ICEA S-66-524, ICEA S-19-81, or ICEA S-68-516 and rated either 600, 2 000, 5 000, 8 000, or 15 000 V. This test is limited to cables installed in the following configurations:

(1) Tray with a fire protected cable system where cables are arranged consistent with ICEA P-54-440.

Copyright © 1993 IEEE. All rights reserved
This is an unapproved IEEE Standards Draft, subject to change

(2) Conduit or free air drop with a fire or electrical separation protected cable system.

(3) Block-out, conduit or sleeve type penetration type fire stop.

4.1.2 Method of Testing Cable ampacity or ampacity derating factor shall be established by testing in accordance with the configurations shown in Figures 4-1, 4-2, and 4-3. Test results may also be used to confirm analytical heat transfer models.

4.2 Test Specimens - Protected Cable Systems

4.2.1 Cable Selection The cables used in the ampacity tests shall have copper conductor(s), 600 V rated cross-linked polyethylene or ethylene-propylene rubber insulation and a chlorosulfonated polyethylene jacket. Depending on the specific test (as outlined below) the cables shall be rated 600 V and of either 3/C No.6 AWG, 3- 1/C 750 kcmil construction. If a user opts to test using conduits sizes other than 1 and 4 inch (see section 4.2.3) then a 3/C, triplex or 3-1/C cable shall be chosen to achieve the maximum allowable fill. When 1/C cables are used for conduit or free air drops, they shall be tie wrapped at intervals not to exceed 2 feet.

4.2.2 Cable Fill The ampacity of a protected cable system is dependent on a number of factors, including: the actual cable depth in a tray, the number of conductors in a conduit and free air-drop, and the conductor size of the cables. The ampacity derating factor of the barrier/wrap systems, however, is not dependent on the these conditions. In order to avoid introducing other types of derating factors, e.g. multiple conductors in a conduit or close conduit grouping factors, the following cable fill conditions shall be used.

(1) Random filled tray: Three layers of 3/C No.6 AWG cables, 0.75 inch diameter, 32 cables per layer, resulting in a depth of 2.25 inches for the 24 inch wide tray.

(2) Conduit: Single circuit of three conductors sized to match the conduit in accordance with NFPA-70 or the largest commercially available size, not to exceed 750 kcmil, generally used in conduits. (See Section 4.2.1)

(3) Free-Air Drop: Fill requirements do not apply.

4.2.3 Conduit Conduit ampacity tests shall utilize 1 and 4 inch rigid steel conduits. Tests conducted using these two sizes shall be considered representative of all sizes provided that the fire protective system installation methods and configurations are consistent across the entire size range. Where the installation methods, configurations, or fit differ according to conduit size the user shall test sizes to bound the

Copyright © 1993 IEEE. All rights reserved
This is an unapproved IEEE Standards Draft, subject to change

specific application. Conduits shall be a minimum of 12 ft long. The conduit shall be isolated from its supporting structure by wooden blocks.

In addition to the conduit, the junction boxes and pull boxes may also be enclosed with a protective material. Since the surface area of the boxes is significantly greater than the conduit, heat transfer is improved proportionally. Therefore, junction boxes and pull boxes do not need to be included in the ampacity test.

4.2.4 **Tray** A commercially available 4 inch deep - 24 inch wide ladder-back style steel cable tray, a minimum of 12 ft long shall be used. The tray shall be isolated from the support by wooden blocks.

4.2.5 **Free-Air Drop** Ampacity tests shall be conducted on free air drop configurations consisting of 1-3/C No.6 AWG and 3-1/C 750 kcmil, respectively. Tests conducted using these two sizes shall be considered representative of all sizes provided that the fire protective system installation methods and configurations are consistent across the entire size range. Where the installation methods, configurations, or fit differ according to size the user shall test sizes to bound the specific application. Free air drops shall be a minimum of 12 ft long. The test specimen shall be supported to prevent sagging and shall be isolated from its supporting structure by wooden blocks.

4.2.6 **Fire Protective Material** The protective material shall be representative of the installed product at maximum thickness. If the product is typically applied in a non-uniform manner, e.g. overlap joint when product is butted, then these sections shall be included in the test.

Some fire-protected cable systems utilize an end seal where the barrier or wrap ends in order to prevent the intrusion of hot gases or fire into the end of the tray or conduit. If end seal is less than six inches, then the seal may be excluded from the test. Otherwise, the end seal should be treated and tested in a similar manner to cable fire stop, except the wall section is excluded.

4.3 Test Specimens - Cable Penetration Fire Stop

4.3.1 **Cable Selection** The ampacity of the cable in a cable penetration fire stop varies with cable conductor size, conductor material, and manner of cable installation outside the fire stop. Tests conducted using a 600 V 3/C No. 12 AWG, aluminum conductor with cross-linked polyethylene insulation and an overall chlorosulfonated polyethylene jacket shall be considered representative of other voltage ratings, conductor sizes and copper or aluminum conductors installed in random filled tray. Tests on single conductor 2/0 AWG aluminum conductor 600 V, with cross-linked polyethylene insulation and a chlorosulfonated polyethylene jacket shall be considered to be representative of cables installed in trays with maintained spacing. Tests performed using copper

Copyright © 1993 IEEE. All rights reserved
This is an unapproved IEEE Standards Draft, subject to change

conductor cables may be used only to establish the derating factors for applications using copper conductor.

In cable bus applications, where larger conductor sizes are generally used, cable specimen shall be the smallest conductor in the anticipated use range. Aluminum conductor material shall be used, unless design is limited to copper conductors.

4.3.2 Cable Fill The tray shall be filled to a one inch depth. The corresponding current in ICEA P-54-440 shall be applied.

Ampacity tests on fire stops installed in trays with maintained spacing (per ICEA P-46-426) shall be conducted on a single layer of 2/0 cables separated by one diameter.

Plant specific design conditions may be tested. However, the results may not be extrapolated to lower percentage filled cable trays.

Conduit fill shall be identical to that specified in Section 4.2.2.

4.3.3 Conduit The conduit specimen shall be identical to that used in section 4.2.3., except that the length of the conduit shall be twenty feet. No fire protective material shall be applied to the conduit other than the fire stop.

4.3.4 Tray Tray specimen shall be identical to that used in section 4.2.4, except the length of the tray shall be twenty feet plus the width of the wall. No fire protective material shall be applied to the tray other than the fire stop.

4.3.5 Floor/Wall Assemblies The type of floor/wall construction and thickness affect the ampacity derating of the system. Thicker floors/walls shall be representative of thinner floors/walls of the same construction. Floors/walls constructed of lower thermal conductive materials shall be representative of floors/walls of higher thermal conductive materials.

The floor/wall assembly must maintain a minimum of 24 inches from its outer edge to the edge of the blockout.

For floor assemblies, the raceways may contain 90 degree bends located at a minimum of 24 inches from each surface of the floor assembly.

4.3.6 Fire Stop Design The fire stop configuration to be ampacity tested shall be representative of the maximum permitted installation tolerances, in contrast to fire tests which are typically conducted on fire stops at the minimum tolerance.

4.4 Test Facility

Copyright © 1993 IEEE. All rights reserved
This is an unapproved IEEE Standards Draft, subject to change

4.4.1 Test Enclosure The ampacity test shall be conducted in an enclosure as shown in figure 4-4, such that the temperature around the specimen shall be controlled to 40°C +/- 2°C. The enclosure shall ensure an even temperature and shall limit drafts on the test specimen. The temperature inside the enclosure shall be measured at no less than three places one foot from the specimen, and in the horizontal plane of the test specimen. The temperature of the enclosure shall be taken as the average of the steady state measurements.

4.4.2 Test Specimen Installation

4.4.2.1 Tray The tray is to be uniformly loaded with a single type of cable. The cables shall be installed in an orderly, symmetric manner, so as to limit the flow of air through the cables and to ensure repeatability. Cable tie wraps shall not be used within the tray.

The cables shall be connected as a single series electrical circuit.

When testing the protected cable systems, a section of insulating blanket shall be placed at the ends of the tray to minimize axial heat flow, such that the average values for the thermocouples at locations 1 and 3 (see Figure 4-1) are within +/- 4°C of the average value for location 2.

4.4.2.2 Conduit The cables shall be pulled into the conduit after installation of the thermocouples. No pulling lubricant shall be used. When three single conductor cables are utilized for the conduit tests, the cables shall be bundled with stainless steel tie wraps or glass cloth electrical tape to ensure thermocouple placement is maintained during insertion or removal.

The cables shall be connected as a single series electrical circuit.

A section of insulating blanket shall be placed at the ends of the conduit to minimize axial heat flow, such that the average values for the thermocouples at locations 1 and 3 (see Figure 4-2) are within +/- 4°C of the average for location 2.

4.4.2.3 Free-Air Drop The cables shall be connected as a single series electrical circuit. When three single conductor cables are utilized for these tests, the cables shall be bundled with stainless steel tie wraps or glass cloth electrical tape to ensure thermocouple placement is maintained.

A section of insulating blanket shall be placed at ends of the free air-drop to minimize axial heat flow, such that the average values for the thermocouples at locations 1 and 3 (see Figure 4-2) are within +/- 4°C of the average for location 2.

Copyright © 1993 IEEE. All rights reserved
This is an unapproved IEEE Standards Draft, subject to change

4.4.2.4 Cable Penetration Fire Stop The cables and raceway penetrating the fire stop floor/wall shall be installed in an identical fashion as during fire testing. This may include special spacing requirements. If the fire stop design permits installation of the cables on the tray rungs or directly on the blockout surface, the bounding condition is considered to be with the cables placed on the tray rungs.

4.4.2.5 Orientation The fire protected raceway test specimens shall be mounted horizontally in order to model worst case orientation and to prevent a "chimney-effect." In the case of fire stop tests, open ends of enclosed raceways must be sealed to eliminate air movement.

4.4.2.6 Installation of Fire Protective Systems The tray and conduit is to be raised off its support after completion of the baseline tests. The protective system shall then be applied in accordance with the method established in the fire or electrical separation testing. The entire assembly shall be lowered back onto the supports while ensuring the assembly is not cracked or otherwise distorted. If the protective system can be removed without disturbing the cables or thermocouple placement, then the baseline tests may be performed before or after testing the protective cable system.

If the product undergoes a curing operation, the test specimen's dry state shall be established by the manufacturer and achieved prior to the test through natural or artificial drying.

If the product is reactive at temperatures below 90°C, then the equilibrium time must be extended based on specific analysis.

4.4.3 Thermocouple Selection and Placement Thermocouples shall be a maximum of 24 AWG, Type T special grade - Copper Constantan with an accuracy of +/- 0.5°C or other thermocouple types which have been calibrated to the same level of accuracy. Thermocouple wire shall have waterproof insulation. Thermocouples shall be placed directly against the conductor.

To attach the thermojunction to the cable, make an approximately 2 inch long slit in the outer jacket of the cable, to expose the insulated conductors. Make a one inch slit in the insulation as shown in Figure 4-5. Insert the thermocouple junction in direct contact with the conductor strands. For three conductor cables, close the insulation slit and seal with a single layer of glass-reinforced electrical tape. For single and three conductor cables, reposition the outer jacket and seal with a single layer of glass-reinforced electrical tape.

The test is intended to identify the temperature of the hottest conductor within the center of the protected cable system and cable penetration fire stop. A set of thermocouples shall be installed at each of the vertical

Copyright © 1993 IEEE. All rights reserved
This is an unapproved IEEE Standards Draft, subject to change

planes along the length of the cable as shown in Figures 4-1, 4-2, and 4-3. Conduit and free-air drops shall have the thermocouples placed on all three conductors. Within the tray assembly, thermocouple leads shall remain in the layer in which they are installed and be routed out the end of the tray in the interstices of the cable mass. For fire protected raceways, the following number of thermocouples shall be placed in each vertical plane:

(1) tray configuration - 5

(2) conduit and free-air drop - 3

For ampacity tests of tray penetration fire stops, 5 thermocouples shall be placed on the conductors in the fire stop in accordance with Figure 4-1. One additional thermocouple shall be placed at 2 foot intervals on one conductor of the center cable in the middle layer on each side of the firestop. (Figure 4-3)

For ampacity tests of conduit or free-air drop penetration fire stops, 3 thermocouples shall be placed on the conductors in the fire stop in accordance with Figure 4-2. One additional thermocouple shall be placed at 2 foot intervals on each side of the fire stop.

4.5 Test Procedure

4.5.1 Baseline Evaluation At least one baseline test for each system, i.e. tray, conduit, free air drop, shall be conducted in order to establish baseline ampacities. Baseline evaluation for a tray assembly must be performed on the same physical specimen used for the derating test. Baseline and derating evaluations for conduits and free-air drops shall be performed using the same instrumented cable set.

4.5.2 Current Source The circuit shall be energized with a 60 Hz, single phase source sufficient to cause the conductor to reach 90°C at location 2 in Figures 4-1, 4-2, and location 1 in Figure 4-3. The current shall be measured to an accuracy of +/- 0.5%. The use of a constant-current amplifier is recommended since the increasing temperature changes the circuit load, i.e. conductor resistance. Alternatively, process control devices can be used to generate and maintain the current source.

4.5.3 Temperature Measurement All temperatures shall be recorded at intervals no greater than one minute. The current in each test circuit shall be adjusted to achieve a hot spot conductor temperature of 90°C +/- 1°C at location 2 for the protected cable systems and location 1 for cable penetration fire stop. The average temperature of thermocouple locations 1 and 3 for the protected cable systems shall be within +/- 4°C of the average temperature reading at location 2. No restrictions are placed on the temperature readings at locations outside the cable penetration fire stop.

Copyright © 1993 IEEE. All rights reserved
This is an unapproved IEEE Standards Draft, subject to change

The cable circuit is considered to be have reached steady state condition when:

(1) A minimum of three hours since the last adjustment of current level or perturbation of the system occurred, and

(2) The rate of change of the average of thermocouple reading at hottest spot (location 2 for Figures 4-1 and 4-2, and location 1 for Figure 4-3) does not exceed +/- 0.2°C per hour for conduit, tray, and free-air drop.

Perturbation of the system conditions includes current adjustment, change in the internal temperature of the enclosure, and addition or removal of insulation on the ends of the tray, conduit or free-air drop. Minor adjustment of current ($\leq$ 0.5%) required to keep the current constant is not considered a perturbation of the system.

In order to statistically assure thermal equilibrium, the conductor temperatures shall be averaged at each sampling period. A linear regression analysis using the least-squares method shall be performed on the data obtained over the preceding 60 minute period. The slope of the line shall be expressed in units of °C per hour. When the absolute value of the slope becomes less than 0.2, equilibrium has been reached.

The degrees of freedom obtained by averaging many thermocouple locations, allows the precision to exceed the +/- C limit of any one thermocouple.

The equations for a linear regression using the least squares fit method are shown below:

$$Y = mX + b \tag{1}$$

$$X = \sum \frac{X}{n} \tag{2}$$

$$Y = \sum \frac{Y}{n} \tag{3}$$

$$m = \frac{\sum XY - \frac{\sum X \sum Y}{n}}{\sum X^2 - \frac{(\sum X)^2}{n}} \tag{4}$$

Copyright © 1993 IEEE. All rights reserved
This is an unapproved IEEE Standards Draft, subject to change

$$b = Y - m X \tag{5}$$

Where:

Y	is the average conductor temperature C
X	is the time increment (min)
m	is the slope of line (C/min)
b	is the Y-axis intercept, C

4.5.4 Enclosure Temperature The temperature within the test enclosure shall be controlled to 40 +/- 2 C. Some induced air movement within the enclosure is necessary to achieve uniform steady-state temperatures. Care must be taken to avoid direct air currents against the test specimens. The method of ambient temperature control within the test enclosure is important. Care must be taken to avoid any additional heat loading on the cables by radiation from a heat source.

Copyright © 1993 IEEE. All rights reserved
This is an unapproved IEEE Standards Draft, subject to change

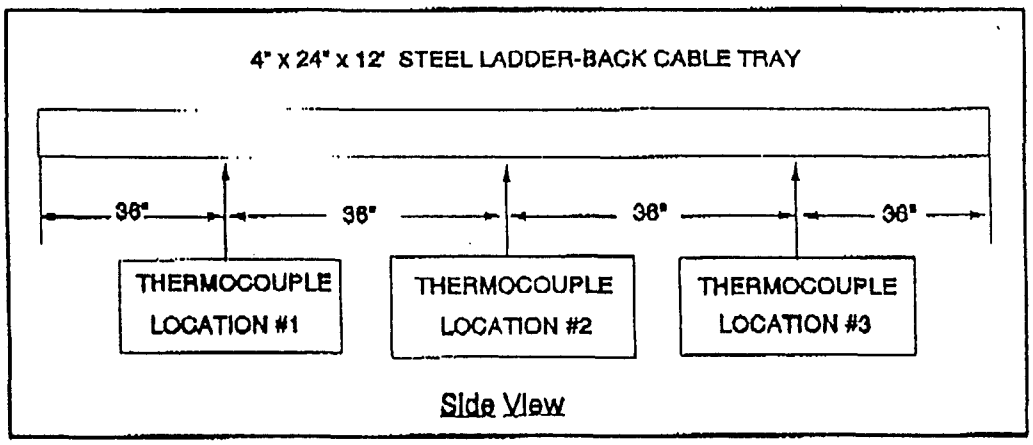

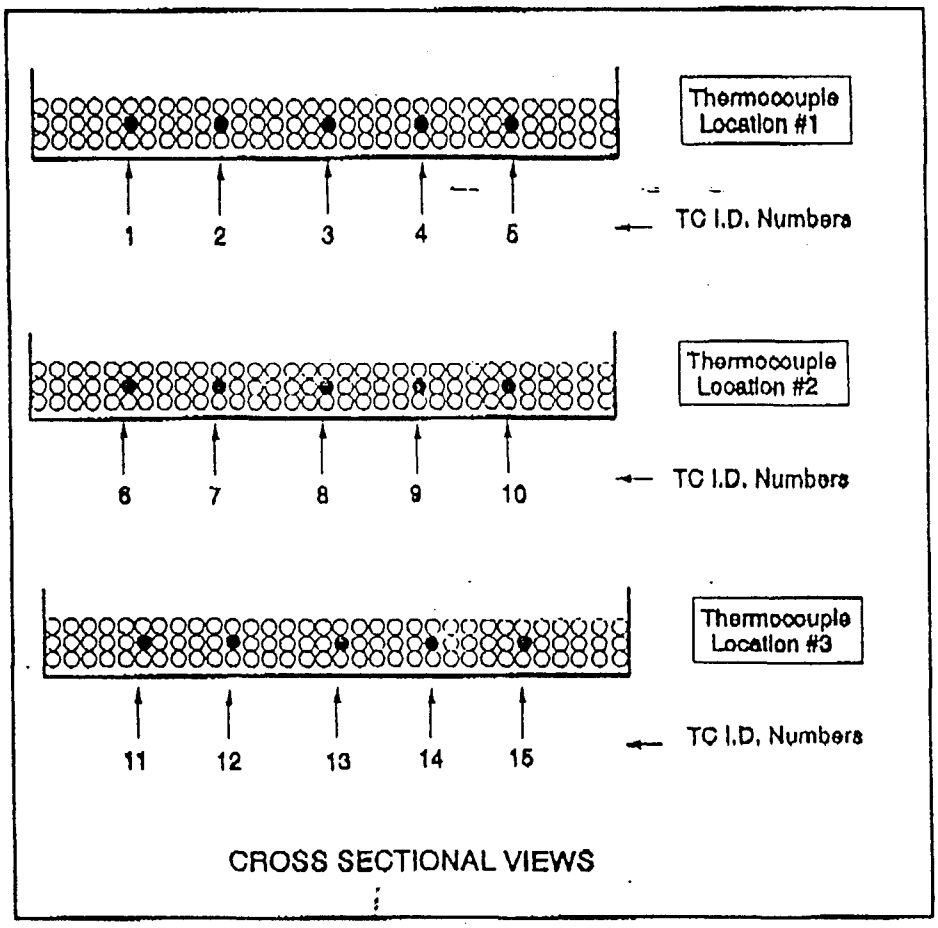

FIG 4-1
Tray Configuration - Protective Cable System

Copyright © 1993 IEEE. All rights reserved
This is an unapproved IEEE Standards Draft, subject to change

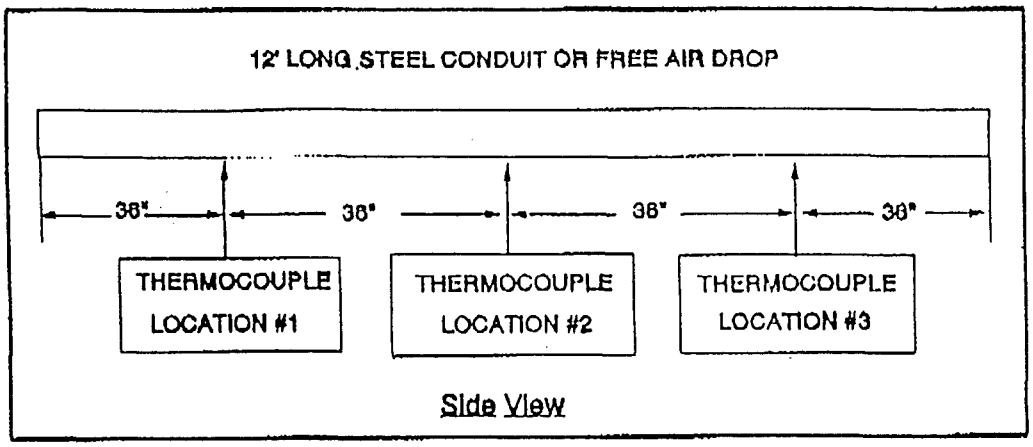

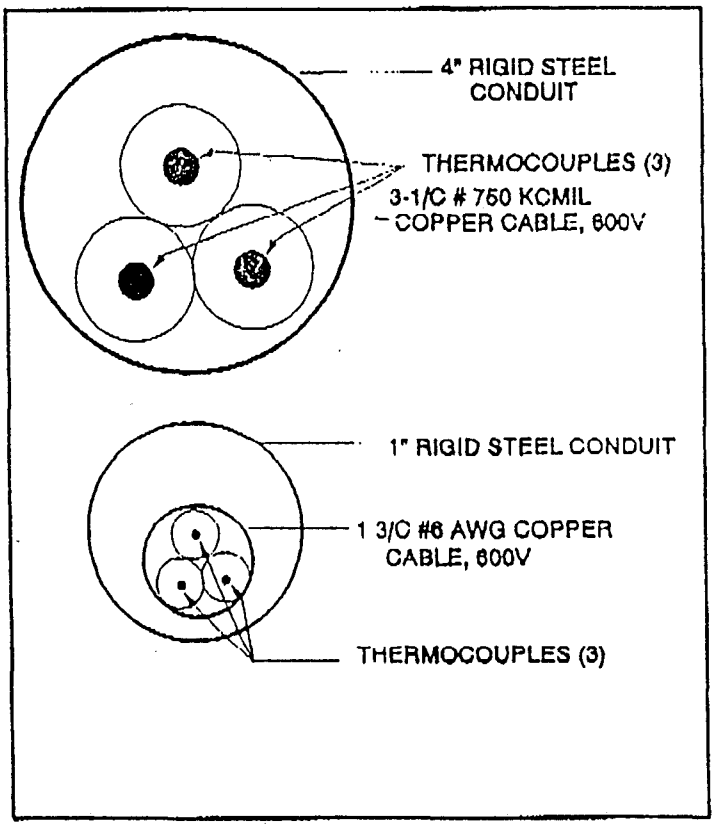

FIG 4-2
Conduit and Free-Air Drop Configurations
- Protective Cable System

Copyright © 1993 IEEE. All rights reserved
This is an unapproved IEEE Standards Draft, subject to change

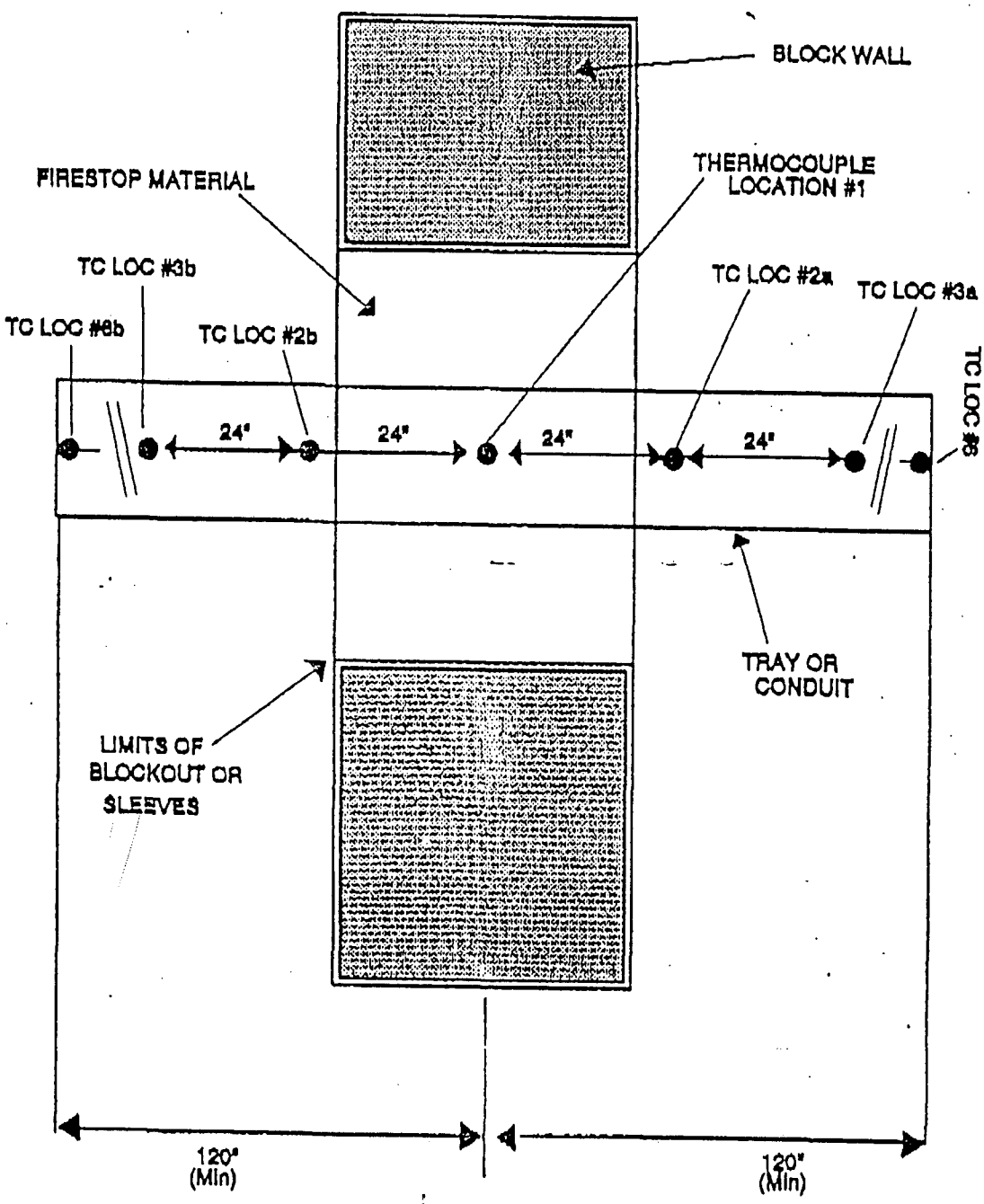

FIG 4-3
Configuration- Cable Penetration Fire Stop

Copyright © 1993 IEEE. All rights reserved
This is an unapproved IEEE Standards Draft, subject to change

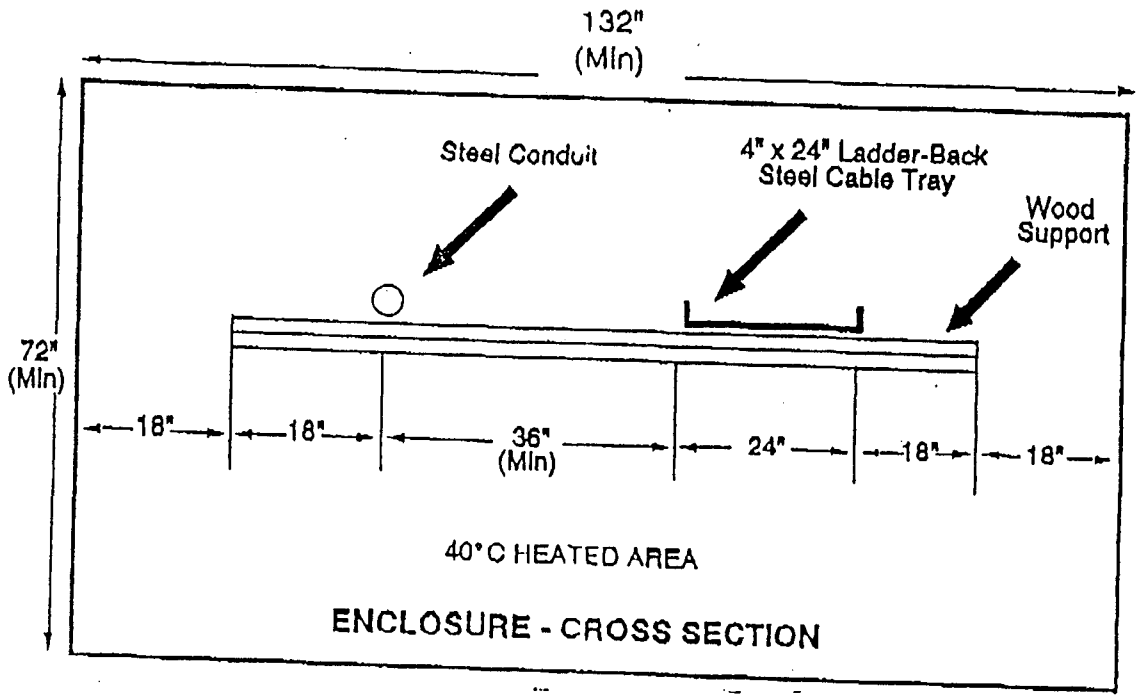

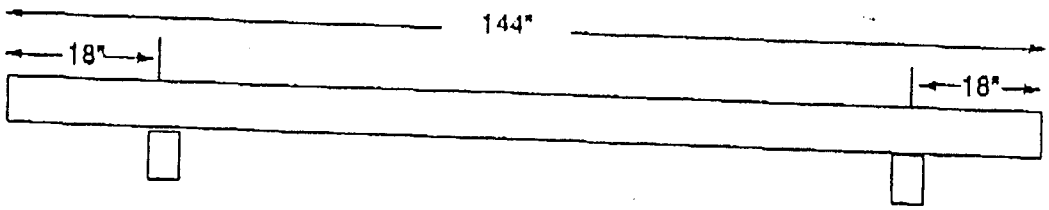

CONDUIT & TRAY SUPPORT POINTS

FIG 4-4
Enclosure and Support Requirements
- Protective Systems

Copyright © 1993 IEEE. All rights reserved
This is an unapproved IEEE Standards Draft, subject to change

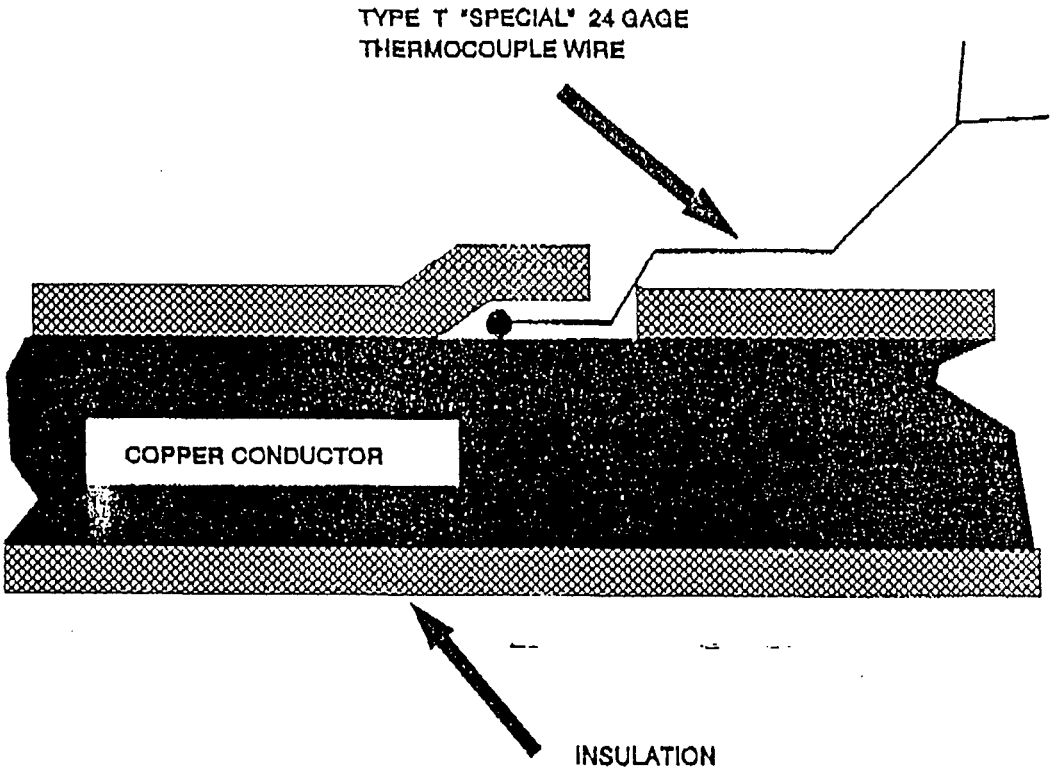

FIG 4-5
Thermocouple Attachment to Conductor

Copyright © 1993 IEEE. All rights reserved
This is an unapproved IEEE Standards Draft, subject to change

5 Evaluation of Test Results

5.1 Normalizing Test Results

After equilibrium has been achieved, the final conductor temperature and the ambient temperature may not match 90 C and 40 C respectively. The results of the baseline and the fire protected cable system tests must be normalized using equation 6 below. The conductor temperature shall be the hottest conductor temperature at location 2 for the protective cable system and location 1 for cable penetration fire stop. The final temperatures must be within the limits established in Section 4.5.4 and 4.5.3.

$$I' = I\sqrt{\frac{(Tc' - Ta')\ (\alpha + Tc)}{(Tc - Ta)\ (\alpha + Tc')}} \qquad (6)$$

where

I	test current at equilibrium, amperes
Tc	hottest conductor temperature at center at equilibrium, C
Ta	measured enclosure ambient temperature, C
I'	normalized current, amperes
Tc'	normalized conductor temperature - 90 C
Ta'	normalized ambient temperature - 40 C
alpha	234.5 for copper or 228.1 for aluminum

5.2 Ampacity Derating Factor

Using the normalized current, as determined from section 5.1, an ampacity derating factor can be calculated using the results of the baseline test and the protected cable system or cable fire stop. The ampacity derating factor (ADF) and ampacity correction factor (ACF) shall be calculated using equations 7 and 8. The user may find it may convenient to express the ampacity results as ampacity correction factor (ACF) for calculation purposes. ACF is applied in a similar fashion as conduit grouping factors and ambient temperature correction factor as shown in ICEA P-46-426.

$$ADF = \frac{(Io - If)}{Io} 100 \qquad (7)$$

Copyright © 1993 IEEE. All rights reserved
This is an unapproved IEEE Standards Draft, subject to change

$$ACF = \frac{If}{Io} \quad (8)$$

Where

Io	is the normalized current for the baseline condition, amperes
If	is the normalized current for the passive fire protected cable system or cable penetration fire stop system
ADF	is the ampacity derating factor, %
ACF	is the ampacity correction factor

Ampacity derating factors shall be expressed in conjunction with reference to its baseline ampacity standard. This is especially important for cable penetration fire stops where the cable installation method outside the wall has a major influence on the resulting derating factor. Cable Fire stop ampacity derating factor is also restricted in terms of conductor size and material.

Examples illustrating how the ampacity derating factors must be expressed are shown below.

(1) ADF = 18 %, Floor Assembly-Fire Stop Penetration, Product design AAA, applied against ICEA P-46-426 "conduit in air ampacities" for 12 AWG aluminum or copper conductors and larger.

(2) ADF = 7 %, Wall Assembly Fire Stop Penetration, Product design AAA, applied against ICEA P-46-426 "conduit in air ampacities" for 1000 kcmil copper conductors or 1250 kcmil aluminum conductor and larger.

(3) ADF = 20 %, Fire Protective Material - Tray Application, Product design BBB, when applied against ICEA P-54-440.

(4) ADF = 18 %, Electrical Separation Wrap - Free Air Drop, Product design CCC, when applied against ICEA P-46-426 "in free air" ampacities.

6 Documentation of Testing

The test report and the resulting derating factor shall include the following documentation:

(1) Description of the test configuration

(2) Date of the test

(3) Location of the test

(4) Description of the test equipment and test articles

Copyright © 1993 IEEE. All rights reserved
This is an unapproved IEEE Standards Draft, subject to change

(5) Calibration documentation of all thermocouples

(6) Qualification and certification for test personnel

(7) Test procedures used.

(8) Ampacity values determined and accompanying equilibration temperatures.

(9) Provide quality control records for:

(a) Test article construction

(b) Qualification and certification for installation and inspection personnel

(c) Identification and installation of fire barrier material

(d) Thermocouple locations

(e) Cables, size, type, and location

(f) Actual tray and conduit cable fill, and calculated depth of cable fill as defined in ICEA P-54-440

(10) Computer printout and graphic results of the ampacity test

(11) All raw data

(12) 35 mm photographic coverage of the test project

(13) Documentation that product does or does not react at temperatures below 90°C.

(14) Documentation that moisture equilibrium has been achieved.

7 Bibliography

[B1] Stolpe, J., "Ampacities for Cables in Randomly Filled Trays", IEEE Transactions on Power Apparatus and Systems, Vol PAS 90, pp 962-973, 1971

[B2] Nemeth, C.W., RackLiffe, G.B., Legro, J.R., "Ampacites for Cables in Trays with Firestops" IEEE Transactions on Power Apparatus and Systems, Vol PAS 100, No. 7 July 1981

[B3] Herter, V.J., Barry, R.E., Began, T.A., "Ampacity Test of a Silicone Foam Firestop in a Cable Tray" IEEE Transactions on Power Apparatus and Systems, Vol PAS 100, No. 7 July 1981

[B4] Esteves, O.M., "Derating Cables in Trays Traversing Firestops or Wrapped Fireproofing" IEEE Transactions on Power Apparatus and Systems, Vol PAS 102, pp. 1478-1481, 1983

Copyright © 1993 IEEE. All rights reserved
This is an unapproved IEEE Standards Draft, subject to change

[B5] Petty, K.A. "Ampacity of Wrapped Cables" IEEE Transactions on Power Delivery Vol 3 No 1, January 1988

[B6] Hiranandani, A.K. "Rating Power Cables in Wrapped Cable Trays" IEEE Transactions on Power Delivery Vol 3 No 1, January 1988

[B7] Save, P., Engmann, G. "Fire Protection Wrapped Cable Tray Ampacity" IEEE Transactions on Power Generation Vol No , 1989

Copyright © 1993 IEEE. All rights reserved
This is an unapproved IEEE Standards Draft, subject to change

EXCEPTIONS TO IEEE P848/D11

Procedure for the Determination of the Ampacity Derating of Fire Protected Cables

1. Section 5.2.4 states the conduit shall be 12 feet long and supported 18 inches from each end.

   Exception: The conduit is 20 feet long and supported 5 feet from each end.

   Basis: The longer specimen will reduce the affects of heat transfer on the measured temperature. Draft 12 states a minimum of 12 feet.

2. Section 5.3.1 references Figure 3 which shows the enclosure width 132 inches.

   Exception: The enclosure width is 96 inches.

   Basis: The enclosure will be used only for conduit; no trays will be tested so the 96-inch enclosure will be sufficient.

3. Section 5.3.2.2 Part b states that 1-3 conductor 750 MCM copper cable will be used.

   Exception: Three single conductor 750 MCM cables will be bundled together to simulate 1-3 conductor.

   Basis: Draft 12 of the standard states that 3 single conductors can be used.

4. Section 5.3.2.5 states that Type K special grade thermocouples will be used.

   Exception: Type T thermocouples with an accuracy of $\pm$ .5°C will be used.

   Basis: Type T thermocouples verified to be within $\pm$ .5°C are more accurate than the type K special grade. Draft 12 of the standard states that Type T special grade thermocouples or a thermocouple of equivalent accuracy will be used.

5. Section 5.3.2.5 states that three thermocouples will be used to determine the conductor temperatures.

   Exception: Nine thermocouples will be used. Three thermocouples will be used in each conductor.

   Basis: Draft 12 states that three thermocouples will be used in each vertical plane.

EXCEPTIONS TO IEEE P848/D11 (CONTINUED)

Procedure for the Determination of the Ampacity Derating of Fire Protected Cables

6. Section 5.3.2.6 states the testing is to be sequential so that one conduit and cable is to be used for all of the testing.

   Exception: Four 4" and four 1" conduits are being used for the test.

   Basis: The same instrumented cable set for the baseline and derating tests for each size conduit will be used as specified by draft 12. Different conduit specimens will be used since each Thermolag configuration has a 30-day curing period after installation.

7. Section 5.3.2.6 states that moisture content in percent moisture will be made on the Thermolag.

   Exception: The moisture content measurement will be made using a hand-held meter recommended by Thermal Science Incorporated (Thermolag manufacturer). Reference Attachment D, Page D-1. This instrumentation will not be traceable back to NIST.

   Basis: Draft 12 states that the moisture content will be reported to ensure that moisture equilibrium has been achieved.

8. Section 5.4.2 states the current value will be reported to 0.1 ampere, but no accuracy is stated.

   Exception: The accuracy for the current measurement will be +/- 1% of reading.

   Basis: Draft 12 states an accuracy of +/- 0.5% instead of an absolute current value. Per Attachment E, this value will be changed to +/- 1% in the final issue of P848.

9. Section 5.4.3 states that the rate of change will not exceed +/- .55°C/hour.

   Exception: A value of +/- .2°C/hour will be used.

   Basis: Draft 12 states the rate of change will be .2°C/hour.

EXCEPTIONS TO IEEE P848/D11 (CONTINUED)

Procedure for the Determination of the Ampacity Derating of Fire Protected Cables

10. Section 5.2.1 states that the cable will be a three conductor.

    Exception: Four conductor, twenty-four conductor, and eight 3/conductor three-phase configurations will be tested in addition to the three conductor cables.

    Basis: The three conductor test has been completed, and inconclusive results were obtained due to inductive heating caused by current imbalance. Use of four conductor and twenty-four conductor cables will minimize the current imbalance and thus the inductive heating in the conduit. Use of eight 3/conductor three-phase cables will verify that results obtained during single-phase testing is applicable to three-phase circuits.

REV 4

ATTACHMENT D

THERMAL SCIENCE INCORPORATED ACCEPTANCE CRITERIA FOR MOISTURE CONTENT

February 23, 1993

Tennessee Valley Authority
LP-4H-C
1101 Market Street
Chattanooga, Tennessee 37402

Attention: Mr. William M. Roop, Jr.
Principal Electrical Engineer

Dear Mr. Roop:

In accord with the information presented in the operating instructions for the Delmhorst Moisture Meter, Model-DP, the manufacturer points out that even readings in the "red zone" of the dial indicate a relatively low moisture content, such as in concrete. The manufacturer further points out that a reading of 35 to 70 on the moisture meter usually indicates a range of moisture content between 2 and 4%.

We recommend that for dry acceptance purposes, the THERMO-LAG 330 Prefabricated Panels and Preshaped Conduit Sections be accepted when the Delmhorst Moisture Meter (Model-DP) has a moisture meter reading of less than 70, on the 0 to 100 scale.

We also recommend that in all areas where THERMO-LAG 330-1 Trowel Grade Material has been applied, that the same acceptance standard be used, a moisture meter reading of less than 70 on the 0 to 100 scale of the Delmhorst Moisture Meter (Model-DP).

Yours truly,

B. E. Evans
Quality Control Manager

BEE/mls

Fax No: 615-751-8247

THERMAL SCIENCE, INC. • 2200 CASSENS DR. • ST. LOUIS, MO 63026 • (314) 349-1233
Telex: 209901 (Answerback: TSI UR) • Telecopier (314) 349-1207

ATTACHMENT E

MEMORANDUM FROM CORPORATE ENGINEERING TO DOCUMENT THE CURRENT ACCURACY REQUIREMENT

B44 930302 001

QA RECORD

March 2, 1993

R.L Morley, PSB1B-C

WATTS BAR NUCLEAR PLANT
AMPACITY DERATING TESTS FOR THERMOLAG FIRE BARRIER MATERIAL
CLSD JOB NUMBER 93-0501

The purpose of this memorandum is to confirm information given to your C.L. Rutledge by K.W. Brown on March 1, 1993. During the course of the review of revision 0 of the test plan for the subject task, it was noted that accuracy requirements in Draft 12 of IEEE P-848 contain a typographical error.

Section 5.4.2 of draft 11 of the subject standard required that the current be measured to within 0.1 amps. As was noted during the March 1 review, the 0.1 amp requirement was a carry over from an earlier draft in which only 3/c No. 6 AWG cables were utilized. Subsequently, derating tests for fire protected conduits were revised to require the use of a 4-inch conduit containing 3-1/c 750 kcmil cables but the working group failed to change the accuracy requirements to a percentage of reading. Such an approach would better reflect the wide disparity between the magnitude of current which would be required for No. 6 AWG and 750 kcmil. Consequently, section 4.5.2 of draft 12 of the standard was revised.

Our K.W. Brown is a member of IEEE/ICC Working Group 12-45 which is preparing the standard. He has checked with other members who were present at the February 22-23 meetings in Boston where draft 12 was prepared and has confirmed that the 0.5 percent limit therein was an error. The requirement should have been to measure current to a 1 percent accuracy. The Working Group has already agreed to correct this section.

Therefore, section 5.3.10 of the test plan shall require that currents during the derating tests are measured with an accuracy of 1 percent.

Should you have any questions regarding the above please contact me at 751-7501.

R.E. Miller
LP4H-C

cc: RIMS, MR 2F-C
J.A. Krieg, LP4H-C
W.R. Roop, LP4H-C
K.W. Brown, LP4H-C

TEST PLAN

WATTS BAR NUCLEAR PLANT
TESTING TO DETERMINE AMPACITY DERATING FACTORS FOR FIRE PROTECTED CABLES

JOB NUMBER 93-0501

Revision 3

April 22, 1993

C. L. Rutledge
Project Engineer

Engineering Services
Section

W. E. Joly
QA Supervisor

Customer Approval

TEST PLAN

REVISION LOG

Job Number 93-0501

Revision Date	Pages Affected	Description of Change	Prepared By	Approved
Rev. 0 03/02/93	All	Initial Issue	C.L.Rutledge	
Rev. 1 03/09/93	2	Section 5.1.1 Revised description of	C.L.Rutledge	
		test specimen		
		Section 5.1.2 Removed "and couplings"		
	3	Section 5.3.5 Revised description of		
		thermocouple locations		
	4	5.3.11 Add "1"		
	A-2	Revised drawing		
Rev. 2 03/22/93	5	Added Section 5.4	C.L.Rutledge	
	A-1	Added note		
	A-2	Revised drawing		
	C-47	Added item 10		
Rev. 3 04/22/93	5	Added Section 5.5	C.L.Rutledge	
	A-1	Revised drawing		
	A-2	Revised drawing		
	B-1	Revised description		

TABLE OF CONTENTS

1.0 Scope

2.0 References

3.0 Quality Assurance

4.0 Receipt Inspection

5.0 Test Procedure

6.0 Report

7.0 Attachments

1.0 SCOPE

The scope of this test is to perform ampacity derating testing for eight configurations of cable and conduit. Four one-inch and four four-inch conduits with various cable configurations will be tested. The testing will be conducted in a temperature stable enclosure and the enclosure temperature, conductor temperature and current will be measured and recorded. This testing will be performed in accordance with P848 Draft 11. Reference Attachment C, pages C-1 through C-45 for a copy of the standards (drafts 11 and 12) and Attachment C, page C-46 and C-47 for a list of the exceptions to draft 11 of this proposed standard.

2.0 REFERENCES

2.1 CLS-QAP-1.1 "Organization"

2.2 CLS-QAP-4.1 "M & TE Calibration Program"

2.3 CLS-QAP-4.7 "Engineering Services Program"

2.4 ANSI N45.2-1971 "Test Control"

2.5 10 CFR 50 Appendix B "Quality Assurance Criteria for Nuclear Power Plants"

3.0 QUALITY ASSURANCE

3.1 Test Equipment

All test equipment and instrumentation to be used in the performance of this test program shall be calibrated in accordance with applicable standards and QA procedures and will conform to applicable portions of ANSI N45.2 and 10 CFR 50 Appendix B except the moisture meter described in Steps 5.3.3 and 5.3.14. Standards used in performing all calibrations are traceable to the National Institute of Standards and Technology (NIST), natural physical constants, or commercially accepted practices.

3.2 Personnel and Procedures

All personnel, procedures, and instructions used in the performance of this test program shall comply with the applicable requirements of the Central Laboratories Services Department (CLSD) Quality Assurance Program.

4.0 RECEIPT INSPECTION

4.1 Tagging

Each conduit configuration shall have a tag attached for identification. The tag shall bear a unique number with the following format, XX-YYYY-Z where XX- YYYY is the job number and Z denotes the individual test sample. All data associated with the conduit configuration will be identified by this number.

4.2 Inspection

The conduit and cable will be inspected to ensure they are free from any physical defects that will prevent testing from being performed.

5.0 TEST PROCEDURE

5.1 Preparation of Test Specimens

5.1.1 Four 20-foot conduit test sections each for one-inch and four-inch conduits will be prepared.

5.1.2 Weigh a minimum of one 20-foot section of each one-inch and four-inch conduit to obtain an approximate weight of the conduit.

5.1.3 Measure the circumference of one of the four-inch and one of the one-inch conduits. This will be used to calculate the thickness of the Thermolag and Thermolag with upgrade after it has been applied to the conduit.

5.1.4 Each section of conduit shall be supported 60 inches from each end and shall be thermally isolated from the conduit. This shall be accomplished by installing a mineral fiber blanket and/or blocks of wood to form a thermal break.

5.1.5 Each of the following configurations will be prepared.

1) One-inch conduit with no Thermolag (baseline)
2) One-inch conduit with 1/2-inch Thermolag
3) One-inch conduit with 1/2-inch Thermolag and 1/4 inch upgrade
4) One-inch conduit with 1/4-inch Thermolag and 1/4-inch upgrade
5) Four-inch conduit with no Thermolag (baseline)
6) Four-inch conduit with 1/2-inch Thermolag
7) Four-inch conduit with 1/2-inch Thermolag and 1/4-inch upgrade
8) Four-inch conduit with 1/4-inch Thermolag and 1/4-inch upgrade

TVA Nuclear Engineering will supply personnel to assemble these test configurations.

5.2 Preparation of the Test Facility

5.2.1 An enclosure shall be constructed so that the temperature around the specimen shall be controlled at the test temperature of 40°C ± 2°C. Some induced air movement within the enclosure is necessary to achieve uniform steady-state temperatures, but care will be taken to avoid direct air currents against the test specimens. Method of ambient temperature control within the test enclosure is important and care will be taken to avoid any additional heat loading on the cables by radiation from heat sources.

5.2.2 The temperature inside the enclosure shall be measured at no less than three places one foot from the specimen and in the horizontal plane of the test specimen. The temperature of the enclosure will be taken as the average of the steady state measurements.

5.3 Test Procedure

5.3.1 Weigh the conduit and Thermolag configurations. Record the information in the log book.

5.3.2 Measure the Thermolag circumference at 20 places along the length of each conduit and average the data. Using the baseline measurement, calculate the Thermolag thickness. Record the information in the log book.

5.3.3 Measure the moisture content of the Thermolag using a hand held moisture meter. Measurements will be taken on the top and bottom exterior of the conduit at the midsection. This measurement shall be made a minimum of two times. The first measurement shall be at least 24 hours prior to beginning the test and the second measurement shall be within four hours of beginning the testing. The moisture instrument is not traceable to NIST.

5.3.4 One three conductor #6 AWG shall be prepared for the one-inch conduits and single conductor 750 KCM copper cables shall be prepared to simulate a three conductor cable for the four-inch conduits. The same prepared cables will be used for testing each configuration of conduit and Thermolag.

5.3.5 Thermocouples with be installed in three locations as shown in Attachment A, page A-2. The outer jacket will be split or a flap cut, and the inner insulation for each of the conductors will be split or a flap cut.
The thermojunction for the thermocouple (24 gage, Type T with an accuracy of ± 0.5°C) will be inserted into the strands of each of the three conductors. The slit/flap will be resealed with a single layer of spiral wrap of electrical tape. This configuration will have a total of nine thermocouples for each test specimen. The thermocouple lead wires shall be bundled in the center of the three 750 mcm conductors. The cable and thermocouples shall be tied with tape or stainless steel bands every two feet.

5.3.6 The cables with the thermocouples installed shall be pulled into place in the conduit.

5.3.7 The cables shall be connected as a single series electrical circuit, which contains all conductors in the system.

5.3.8 The cables which penetrate the end of the conduit shall be wrapped with thermal insulation. Electrically heated tape may be used to allow the end of the cable to be adjusted to keep the two outer thermocouples within 4°C of the center.

5.3.9 Seal the ends of the conduit with insulation material.

5.3.10 The circuit shall be energized with 60 Hz, single phase alternating current sufficient to reach a steady-state temperature of 90°C at the hottest single point monitored at location two. (Reference Attachment A, page A-2.) The current values measured shall be reported to the nearest 0.1 ampere, and will be accurate to ± 1% of reading.

5.3.11 The temperature measurements will be recorded on a data logger and at intervals no greater than 1 minute. The current in each test circuit shall be adjusted to achieve a hot spot conductor temperature of 90°C ± 1.1°C at location #2. The average temperatures at locations #1 and #3 shall be within ± 4°C of the average temperature readings at location #2.

5.3.12 The system will be considered to be in steady state condition when a three-hour period has elapsed since any perturbation of the system occurred (current adjustment, box temperature change, additional insulation placed on ends, etc.) and the rate of change of the average of all monitored conductor temperatures in that circuitry does not exceed ± 2°C. Readjustment of the current flow to a circuit in order to maintain a given amperage value is not to be considered a perturbation.

5.3.13 In order to statistically assure thermal equilibrium, the conductor temperature will be averaged at each sampling period and a linear regression analysis performed on the data obtained from that and all other averages taken of the preceding 60-minute period. The slope of the line will be in °C/hour. As soon as the absolute value of the slope of these data becomes less than 0.2, equilibrium has been reached. Reference Attachment B for a detailed procedure for performing this analysis. This will be performed using computerized data retrieval and analysis. (Reference Attachment A, page A-1 for test setup.)

5.3.14 Measure the moisture content of the Thermolag using a hand held moisture meter. Measurements will be taken on the top and bottom exterior of the conduit at the midsection. This measurement shall be made within four hours of completing the test. The moisture instrument is not traceable to NIST.

5.4 Four Conductor Test Procedure

NOTE: This testing is performed due to inconsistent results obtained during the three conductor cable test. All test results for the three conductor test and four conductor test will be reported in the final report.

5.4.1 Prepare one four conductor #6 AWG for the one-inch conduits and single conductor 750 KCM copper cables shall be prepared to simulate a four conductor cable for the four-inch conduits. The same prepared cables will be used for testing each configuration of conduit and Thermolag.

5.4.2 Thermocouples will be installed in three locations as shown in Attachment A, page A-2. The outer jacket will be split or a flap cut, and the inner insulation for each of the conductors will be split or a flap cut. The thermojunction for the thermocouple (24 gage, Type T with an accuracy of ± .5°C) will be inserted into the strands of each of the four conductors. The slit/flap will be resealed with a single layer of spiral wrap of electrical tape. This configuration will have a total of twelve thermocouples for each test specimen. The thermocouple lead wires shall be bundled in the center of the four 750 mcm conductors. The cable and thermocouples shall be tied with tape or stainless steel bands every two feet.

5.4.3 Repeat steps 5.3.3 and 5.3.6 through 5.3.14 for each configuration of cable and conduit.

5.5 Twenty-four Conductor in Four-inch Conduit Test Procedure

NOTE: This testing is performed due to inconsistent results obtained during the three and four conductor cable test in the four inch conduit. All test results for the three conductor, four conductor, and twenty-four conductor tests will be reported in the final report.

5.5.1 Prepare eight three conductor 6 AWG sections of cable.

5.5.2 Connect the 24 individual conductors end to end so that they are series connected.

5.5.3 Install thermocouples in three locations as shown in Attachment A, page A-2. The thermocouples will be installed in the black conductors at each of the locations. The outer jacket will be split or a flap cut, and the inner insulation for each of the conductors will be split or a flap cut. The thermojunction for the thermocouple (24 gage, Type T with an accuracy of ± .5°C) will be inserted into the strands of each of the eight conductors monitored. The slit/flap will be resealed with a single layer of spiral wrap of electrical tape. There will be eight thermocouples at each location for a total of twenty-four thermocouples. REV 3

5.5.4 Repeat steps 5.3.3 and 5.3.6 through 5.3.14 for each configuration of four-inch conduit.

6.0 REPORT

6.1 Final Report

The final report shall describe the test requirements, report the results of the tests, and reference procedures and test instructions required to perform this test plan. The following information specifically shall be included.

1. Description of the test configuration.
2. Date of the test.
3. Location of the test.
4. Description of the test equipment and test articles.
5. Calibration documentation of all thermocouples.
6. Qualification and certification for test personnel.
7. Test procedures used.
8. Ampacity values determined and accompanying equilibrium temperatures.
9. Description of:
   a. Test article construction
   b. Installation and inspection procedure
   c. Identification and installation of fire barrier material
   d. Thermocouple locations
   e. Cables, size, type, and location
10. Computer printout and graphic results of the ampacity test.
11. All raw data.
12. 35mm photographic coverage of the test project.
13. Provide a chronological log (Event Log) of all activities from receipt of materials through final test report.

6.2 Anomalies

All abnormal or unusual occurrences related to the performance of the test instrumentation, test fixtures, or test specimens shall be reported as an anomaly. This shall also include deficiencies in test methods, procedures, instructions and any deviation from the test plan.

A notice of anomaly report shall be initiated and forwarded to the customer once an anomaly has been identified. All anomalies shall be investigated, their impact on the test shall be established, and corrective action acceptable to the customer accomplished prior to continuation of any testing. Final customer acceptance shall be documented by the customer's approval of the notice of anomaly report.

7.0 ATTACHMENTS

7.1 Attachment A - Test Setup

7.2 Attachment B - Linear Regression Fit Method

7.3 Attachment C - Drafts 11 and 12 of IEEE P848 and Exceptions to Draft 11

7.4 Attachment D - Thermal Science Incorporated Acceptance Criteria for Moisture Content

7.5 Attachment E - Memorandum from Corporate Engineering to document the current accuracy requirement

0186T

ATTACHMENT A

TEST SETUP

TEST SET-UP FOR ONE CONDUIT AND CABLE ARRANGEMENT TYPICAL OF EIGHT

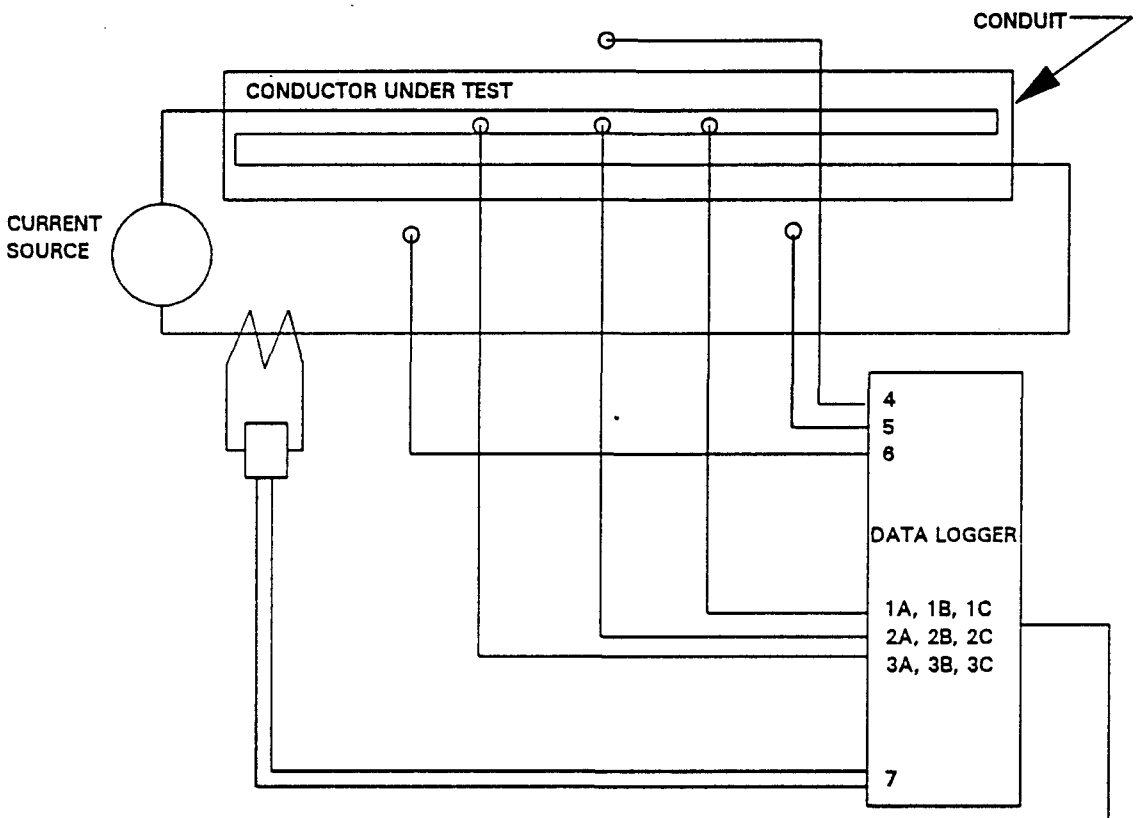

NOTE: FOR THE FOUR AND TWENTY-FOUR CONDUCTOR ARRANGEMENTS THE CONDUCTORS CONNECTED TO THE CURRENT SOURCE WILL EXIT THE SAME END OF THE CONDUIT. FOR THE FOUR CONDUCTOR TEST THE TEMPERATURE WILL BE MONITORED ON EACH OF THE CONDUCTORS. THE ADDITIONAL THERMOUCOUPLE WILL BE NUMBERED 1D, 2D, AND 3D. THE TWENTY FOUR CONDUCTOR ARRANGEMENT WILL HAVE A THERMOCOUPLE ON THE BLACK CONDUCTOR AT EACH LOCATION. THE ADDITIONAL THERMOCOUPLES WILL BE NUMBERED 1D THROUGH 1H, 2D THROUGH 2H, AND 3D THROUGH 3H.

REV 3

INPUTS 1, 2, AND 3 AVERAGED AND USED TO CALCULATE LINEAR REGRESSION. EACH CONDUCTOR WILL HAVE A THERMOCOUPLE INSTALLED IN IT. THIS WILL YIELD A TOTAL OF 9 TEMPERATURES (12 ON 4 COND. AND 24 ON 24 COND.) TO BE BE AVERAGED. THE SLOPE OF THE LINE MUST BE LESS THAN THE ABSOLUTE VALUE OF 0.2
INPUTS 4, 5, AND 6 AVERAGED FOR ROOM TEMPERATURE 40 DEG C +/- 2 DEG C
INPUT 7 IS THE CURRENT MEASURED IN THE CIRCUIT BY MEANS OF A CURRENT TRANSFORMER AND CURRENT TRANSDUCER.

C:\FL\CINDY\9305014.DWG

THERMOCOUPLE LOCATIONS

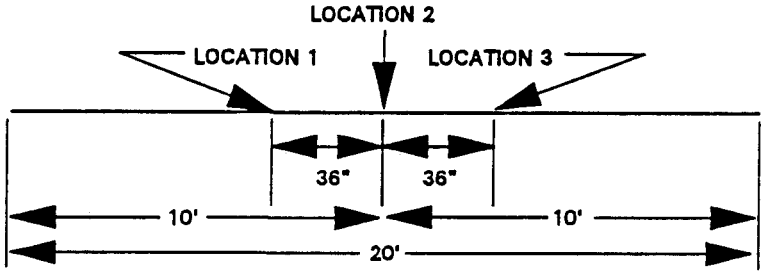

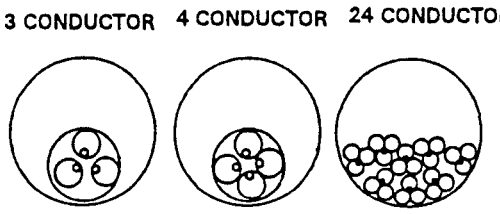

THERMOCOUPLE GOES ON THE CONDUCTORS - ONE ON EACH CONDUCTOR AT EACH LOCATION FOR THE 3 AND 4 CONDUCTOR ARRANGEMENTS, ONE ON THE BLACK CONDUCTOR AT EACH LOCATION FOR THE 24 CONDUCTOR ARRANGEMENT.

REV 3

ENCLOSURE WALLS A MINIMUM OF 18 INCHES FROM THE SUPPORTS
SUPPORTS LOCATED 5 FEET FROM EACH END.

C:\FL\CINDY\9305011.DWG

ATTACHMENT B

LINEAR REGRESSION METHOD

As an example of the least-squares technique, consider the conduit in Attachment A, page A-1. At each sampling time, an average temperature of all thermocouples will be calculated. This value will then be added to the top of an array large enough the hold 60 minutes worth of these averages, and the oldest value discarded. A linear regression fit is then performed on the array and presented on the video screen to the operator. When the next data sampling is completed, the entire process is repeated, thus yielding a linear regression fit of the data from the previous 60 minutes. As each new data point is added to the array, all previous ones are shifted down on time increment until each is finally discarded due to the fixed size of the array. | rev 3

$$Y = mX + b \qquad \overline{X} = \sum X/n \qquad \overline{Y} = \sum Y/n$$

$$m = \frac{\sum XY - \dfrac{\sum X \sum Y}{n}}{\sum X^2 - \dfrac{(\sum X)^2}{n}}$$

$$b = \overline{Y} - \overline{mX}$$

WHERE:

X=AVERAGE CONDUCTOR TEMPERATURE (DEG C)

Y=TIME INCREMENT (MIN)

M=SLOPE OF LINE(DEG C/MIN)

B=Y-AXIS INTERCEPT 9DEG C)

C:\FL\CINDY\9305016.DWG

ATTACHMENT C

DRAFTS 11 AND 12 OF IEEE P848 AND EXCEPTIONS TO DRAFT 11

ATTACHMENT 2

April 6, 1992

P848/D11

PROCEDURE FOR THE DETERMINATION OF THE AMPACITY DERATING OF FIRE PROTECTED CABLES

Prepared by Task Group 12-45
of the Test and Measurements Subcommittee #12
of the IEEE Insulated Conductors Committee

All rights reserved by the Institute of Electrical and Electronics Engineers, Inc.

At the time this draft was completed, the Task Group on Procedure for the Determination of the Ampacity Derating of Fire Protected Cables had the following membership.

A.K. Gwal, Chairman

T. J. Al-Hussaini
P. Bhatia
E. A. Capouch
E. J. Coffey
E. J. D'Aquanno
R. Das
J. Daly
P. J. Finnerty
J. B. Gardner
P. A. Giaccaglia
A. Hiranandani
C.V. Johnson
A.E. Kollar
R. G. Koza
R. Licht
J. E. Merando, Jr.
K. W. Prier
D. N. Priest
B. E. Reagan
G. A. Remaley
P. D. Skelly
M. Spurlock
W. Torok
J. R. Tuzinski
F. W. Van Nest
T. A. Venkataraman
J. G. Waligorski

Other individuals who have contributed are:

K. W. Brown
D. C. Gasda

PROCEDURE

for the Determination

of the

AMPACITY DERATING OF FIRE PROTECTED CABLES

DRAFT 11

April 1992

INTRODUCTION

Many installations incorporate individual or grouped cables which do not limit the flame propagation under fire conditions. This deficiency can be attributed to conventional cable constructions, such as polyethylene insulated PVC jacketed control cables; which were popular in the sixties and early seventies. Such cables do not meet the flame spread criteria when subjected to the vertical tray flame test which has been accepted in one form or another. Other installations which fall in the same category include metal sheathed or armored vertical shaft cables with overall polyethylene jacket and secured with clamps at various intervals. Polyethylene jacket is used because of its high resistance to creep under pressure in the clamp area to support the sheer weight of the cable.

The foregoing installations include industrial, commercial, marine, nuclear or fossil generating stations and others.

To retard the flame propagation properties of cables in cable trays, protective coatings are applied either along the entire length of the cable(s) or in certain sections as deemed necessary. The flame retardant coatings may be in a form of tapes, blankets, liquids or mastics applied to individual or to grouped cables, both for retrofitting existing installations or for new installations.

1. PURPOSE

The purpose of the standard is to provide a test procedure which may be used to determine the ampacity derating required for fire protected cables in conduit, in penetrations (fire stop) and in cable tray systems.

2. SCOPE

This standard provides a detailed procedure for determining the ampacity derating required for fire protected cable systems. The tests are intended to be used to determine the ampacity derating of fire protected systems which is to be applied to the ampacity of cables determined by standard methods such as ICEA P-46-426 Power Cable Ampacity Volumes 1 & 2, and ICEA P-54-440 Cables in Open-top Cable Trays.

2.1 General

The procedure presented in this standard includes the principles and methods of testing. This test procedure will provide the ampacity derating of a fire protected cable system.

2.2 Applicability

Fire protected cable systems outlined herein are intended for use in power generating stations, both nuclear and fossil, as well as other applicable commercial and industrial installations, both outdoors and indoor. The categories of cables include, but are not limited to: power, control, and instrumentation including signal and communication cables. Testing of flame retardant coatings on horizontal cables will qualify the coatings for all orientations. The tests as described herein are intended to be used in determining the derating factor, which may be required for fire protected cables in conduits and trays. The ampacity of the cable in raceway will typically have first been determined using accepted practices such as ICEA P-46-426 Power Cable Ampacities Volumes I and II, and ICEA P-54-440 Cables in Open-Top Cable Trays.

The user of flame retardant coatings is cautioned to determine that the coating is compatible with the cable materials with which it comes in contact and with the environment in which it is installed. The user may specify tests in addition to those specified in this standard to reflect the installation conditions, e.g., for nuclear stations, the user may wish to add irradiation test or effects of added weight; or for outdoor installations, the user may wish to add a U.V. resistance test.

3. DEFINITIONS

These definitions establish the meanings of words in the context of their use in this standard.

Fire Protected Cable Systems

Cable systems to which an application of a flame retardant barrier, fire resistive barrier or coating (flame retardant coating) to protect cables from fires from any cause has been applied.

Flame Retardant Coatings

A material applied to a completed cable or assembly of cables to prevent the propagation of flame when exposed to a flame source. Flame retardant coatings include tapes, blankets, liquids, flame retardant mechanical system or mastics.

Passive Fire Protection Systems

Systems which embody fire resistant construction such as coatings, barriers, walls, and penetrations (fire stops) as opposed to water sprinkler systems or gaseous extinguishing systems.

Through-Penetration Fire-stop

A specific construction of devices, fill materials, or both, designed to resist the penetration of fire through those openings in fire resistive floors or walls that are intended to accommodate electric cables, raceways and mechanical service penetrations.

Ampacity Derating Factor

A factor applicable to the ampacity rating of a cable (or other device) to account for the adverse affects of some installation or environmental condition.

Raceway

Any channel that is designed and used expressly for supporting or enclosing wires, cables, or bus bars. Raceways consist primarily of, but are not restricted to, cable trays and conduits.

Cable Tray

A continuous rigid structure used to support cables. Cable trays include ladders, troughs, channels and other similar structures. Conduits are not included in this category.

Enclosures

A surrounding case or housing used to protect the contained equipment and prevent personnel from accidentally contacting live parts.

4. REFERENCES

The following standards were used as references in preparing this standard and may be useful in the interpretation of its meaning:

ICEA P-46-426/IEEE S-135
Power Cable Ampacities, Vols. 1 and 2. Dated 1962 (Reprinted in 1984).

ICEA P-54-440/NEMA WC-51
Ampacities - Cable in Open Top Cable Trays. Dated 1986.

5. TEST DESCRIPTION

5.1 General

This section describes the method for determining ampacities of cable passing through single tray and conduit with and without a passive fire protection system.

5.1.1 Applicability

This method shall be applicable to a single cable or groups of cables enclosed in a passive fire protection system. Cables may be contained in a raceway or as dictated by the actual installation.

5.1.2 Method of Testing

Ampacity derating for cables of a passive fire protective system shall be by testing. Testing shall be performed using the configurations depicted in Figures 1 and 2. As an alternative, tests may be performed using representative assembly which can be analyzed to show its applicability to actual installed conditions. Results are also applicable for 1000 volts and higher rated cables.

5.2 Test Specimens

5.2.1 Cable Selection

The cable to be utilized is chosen as one which is representative of a wide range of cables. The selection of a 3 conductor cross link polyethylene insulated, #6 AWG 600 volts copper cable with an overall chlorosulfonated polyethylene (i.e. hypalon) jacket was chosen as representative.

5.2.2 Cable Fill

Cable fill is the ratio of cable area to the inside area of the tray expressed in percentage. A 40 percent cable fill, as determined from actual measurement shall be used for cable trays.

5.2.3 Cable Layout

The length of both the conduit and the tray shall be twelve feet. One to two feet of cable shall extend out each end and shall be wrapped with unfaced fiberglass blanket insulation (or electrically-heated tape) as necessary to eliminate heat flow out of raceway ends.

5.2.4 Conduit

The conduit system shall be 4 inch and 1 inch steel rigid conduit, 12 feet long supported every 18 inches from each end by a horizontal piece of "H"-shaped or 2" x 2" square structural tubing.

5.2.5 Tray

The tray shall be a 4 inch deep, 24 inch wide ladder-back steel cable tray 12 feet and support similarly to the conduit system. The tray and conduit systems, if tested together, must be at least 36 inches apart along their lengths.

5.2.6 Through-Penetration Fire-stops

A through-penetration fire-stop intended for installation in a fire resistive floor assembly, wall assembly, or both, is to be installed in a wall section so that the electrical cables pass horizontally through the wall. The through-penetration fire-stop is to be installed in

accordance with all requirements specified for the fire-stop being tested.

The sample wall section is to be representative of that specified for the through-penetration fire-stop. The thickness of the wall section is to be equal to the maximum thickness of the fir-estop system or device. The size of the through opening in the wall section is to be representative of the through opening size specified for the through-penetration fire-stop.

The fire protective system is to be installed around the electrical cable(s) and raceway(s) in accordance with all requirements specified for the system.

5.3 Test Facility

5.3.1 Test Room

The ampacity test shall be conducted in an enclosure as defined in Figure 3. The test specimen shall be suitably enclosed such that temperature around the specimen shall be controlled at the test temperature of 40°C±2°C. The enclosure surrounding the test specimen shall be of even temperature, but must not cause drafts on the test specimen. The temperature inside the enclosure shall be measured at no less than three places one foot from the specimen, and in the horizontal plane of the test specimen. The temperature of the enclosure shall be taken as the average of the steady state measurements.

5.3.2 Cable Installation

5.3.2.1 Tray

The tray is to be loaded with three conductor #6 AWG, 3/c copper cable, with an overall chlorosulfonated polyethylene jacket. The tray fill should be based on 40 percent fill.

Tray cables should be installed in an orderly, symmetric manner, so as to limit the flow of air through the bundle, and to facilitate inter and intra-laboratory repeatability of these tests. The cables shall be connected as a single series electrical circuit, which contains all conductors in the system. The tray is to be supported by two horizontal pieces of "H"-shaped or a suitable support system, located as shown in Figure 3. A 3" x 25" piece

of 1" thick mineral fiber blanket shall be placed between the tray and support system to form a thermal break. Thermal insulation (e.g., fiberglass or electrically-heated tape) shall be wrapped around the cable which extends out of both ends of the tray to allow adjustment of end temperatures. The end temperatures must be adjusted such that the average values for the thermocouples at locations 1 and 3 are within 4°C of the average for location 2 to minimize axial heat flow.

5.3.2.2 Conduit

Since the application of the fire protection system may result in differing derating for different conduit sizes, two sizes of conduits shall be tested:

(a) 1 inch rigid steel conduit with one 3/c No 6 AWG copper cable

(b) 4 inch rigid steel conduit with one 3/c, 750 Kcmil copper cable

Derating for both sizes shall be reported. Lowest factor shall be used for ampacity derating. The bundle shall be instrumented with thermocouples as shown in Figure 2, tied with wraps every 2 feet, and pulled into position in the conduit. The cables shall be connected as a single series electrical circuit, which contains all conductors in the system. The conduit is to be supported by two horizontal pieces of "H" shaped or 2" x 2" structural square tubing with a minimum of 36 inches clearance from the tray or walls of the enclosure. The attachment points between the conduit and the supporting beam are to be insulated with 1" thick mineral fiber blanket to form a thermal break similar to the tray system. Insulation (or electrically-heated tape) shall be wrapped around the cable which extends out of both ends of the conduit to allow adjustment of end temperatures. The end temperatures must be adjusted such that the average values for the thermocouples at locations 1 and 3 are within 4°C of the average for location 2, to minimize axial heat flow. In other words, the ends should be close to the same temperatures as the middle, thereby minimizing axial heat flow.

5.3.2.3 Through-Penetration Fire-stops

The electrical cable(s) and raceway(s) penetrating the sample wall section are to be representative of those specified for the through-penetration fire-stop and are to be of sufficient length to project a minimum of 24 inches beyond both sides of the wall section. For this purpose maximum thickness of fire-stop shall be measured. Thermocouples on the electrical cables in through-penetration fire-stops are to be located so that temperatures are measured in the interior of the fire-stop and at the fire-stop mid-depth as in figure 5.

5.3.2.4 Orientation

The test specimens shall be mounted and the tests run in the horizontal direction so as to eliminate any possibility of a "chimney-effect" which could cause air movement within the system.

5.3.2.5 Thermocouple Placement

Thermocouples (24 gage, Type K [Special Grade] Chromel-Alumel, accuracy ±1.15°C) shall be installed by slitting the cable insulation and jacket and placing the thermojunction in intimate physical contact with the conductor strands, as illustrated in Figure 4. The cable shall then be restored as closely as possible to its original condition, and the slit sealed with a single-layer spiral wrap of electrical tape. Since the test is evaluating the temperature at the hottest position, rather than the average of all thermocouples, the cables within the bundle have been instrumented, instead of those near the outside. For both the conduit and tray systems, thermocouples shall be placed at each of three vertical planes along their lengths, as illustrated in Figures 1 and 2. The tray system shall be instrumented with 13 thermocouples at each plane, for a total of 39 thermocouples, and the conduit system shall be monitored with 1 thermocouple at each plane, for a total of 3 thermocouples.

5.3.2.6 Installation of Passive Fire Protection Systems

The tray and/or conduit is to be lifted off it's support after the completion of the baseline test, the passive fire protective system applied in accordance with the manufacturer's instructions, and the entire assembly lowered onto the horizontal

support, thereby minimizing any heat sink effect from the support system. After installation, the passive fire protection system shall be allowed to equilibrate (or cure) to a state of constant moisture content, if applicable. Moisture content (in terms of percent moisture) shall be taken 4 hours or less before the test is begun and within 4 hours after completion of the test, using either a hand-held moisture meter, or standard 120°C oven-dry methods). Such moisture determination is to be made on the top and bottom exterior surfaces of both the tray and conduit systems at their mid-length, and the results of top and bottom averaged.

5.4 Test Procedure

5.4.1 Baseline Evaluation

At least one baseline experiment for each system (conduit and tray) using Sections 5.4.2, 5.4.4, and 5.4.5 shall be conducted to establish the cable ampacity prior to application of the fire protective system. The ampacity value measured should be compared to the IEEE-ICEA Power Cable ampacities standards.

5.4.2 Current

The circuit shall be energized with 60 Hz, single phase alternating current sufficient to reach a steady-state temperature of 90°C at the hottest single point monitored at location 2 (see Figures 1 & 2). The current values measured shall be reported to the nearest 0.1 ampere. The use of a constant-current amplifier is highly recommended as a power source, since the increasing temperatures of the conductor circuit cause resistance changes. Alternatively large variable transformers may be used, with constant readjustment to maintain a set current flow.

5.4.3 Temperature Measurement

All temperatures shall be recorded at intervals no greater than 1 minute. The current in each test circuit shall be adjusted so as to give an equilibrium temperature of 90°C±1.1°C at the hottest point monitored within location #2 (those located at the center of the system). The average temperatures of thermocouple locations #1 and #3 shall be within ±4°C of the average of thermocouple location #2. Each cable circuit shall be

considered to be in steady state condition when a three-hour period has elapsed since any perturbation of the system occurred (current adjustment, box temperature change, additional insulation placed on ends, etc.) and the rate of change of the average of all monitored conductor temperatures in that circuit does not exceed ±0.55°C for the conduit[1] and ±0.35°C for tray[1]. Re-adjustment of the current flow to a circuit in order to maintain a given amperage value is not to be considered a perturbation.

In order to statistically assure thermal equilibrium, the conductor temperatures should be averaged at each sampling period and a linear regression analysis (least-squares fit) performed on the data obtained from that and all other averages taken over the preceding 60 minute period. The slope of the line obtained will be in units of °C/hour. As soon as the absolute value of the slope of these data becomes less than 0.55 (conduit) or 0.35 (tray), equilibrium has been reached. The degrees of freedom obtained by averaging many thermocouple locations (3 for conduit, 39 for tray), allows the precision to exceed the ±1.1°C limit of any one thermocouple. The only practical method of obtaining the required accuracy in determining thermal equilibrium is through the use of computerized data retrieval.

As an example of the least-squares technique, consider the tray system in Figure 1. At each sampling time, an average temperature of thermocouples 1 through 39 will be calculated. This value will then be added to the top of an array large enough to hold 60 minutes worth of these averages, and the oldest value discarded. A linear regression fit is then performed on the array and presented on the video screen to the operator. When the next data sampling is completed, the entire process is repeated, thus yield a linear regression fit of the data from the previous 60 minutes. As each new data point is added to array, all previous ones are shifted down one time increment, until each is finally discarded due to the fixed size of the array.

[1] Chosen as the 95% confidence limits for Special Grade, Type K thermocouples at 90°C.

LINEAR REGRESSION (LEAST SQUARES METHOD) FIT:

$$Y = mX + b \qquad \overline{X} = \Sigma X/n$$

$$\overline{Y} = \Sigma Y/n$$

$$m = \frac{\Sigma XY - \frac{\Sigma X \Sigma Y}{n}}{\Sigma X^2 - \frac{(\Sigma X)^2}{n}}$$

$$b = \overline{Y} - m\overline{X}$$

Where:

Y = Average Conductor Temperature (°C)
X = Time Increment (min)
m = Slope of line (C/min)
b = Y-Axis intercept (°C)

5.4.4 Enclosure Temperature

The temperature within the test enclosure shall be controlled to 40°C ±2°C. Some induced air movement within the enclosure is necessary to achieve uniform steady-state temperatures, but care must be taken to avoid direct air currents against the test specimens. Method of ambient temperature control within the test enclosure is important and care must be taken to avoid any additional heat loading on the cables by radiation from heat source.

6. EVALUATION OF TESTS

By a simple comparison of the baseline and test specimen ampacities, a derating factor can be calculated.

Data Interpretation: Ampacity Derating Factor

The maximum current carrying capacity shall be determined by derating applied as dictated by the test. The derating factor as determined by the test is to be calculated as follows:

% Ampacity Derating Factor = $(I_0 - I_f)/ I_0 \times 100$

Where:

I_0 = Current in amperes required to attain a temperature of 90 °C for the baseline (un-protected) system. However, if I_0 is larger than published ampacity i.e. ICEA P-46-426, P-54-440 then published ampacity shall be used for I_0.

I_f = Current in amperes required to attain a temperature of 90 °C for the system as protected by the passive fire protection system.

7. DOCUMENTATION OF TESTING

Following the procedure outlined in this standard, provide percentage ampacity derating and record the following specific data.

- Description of cables and raceway, if different from specified herein.
- All thermocouple data
- All current and voltage values
- Current and conductor temperature values observed at equilibrium
- Weight of passive fire protection system (lb/ft)
- Average thickness of fire protective system (inches)
- Details of installation of fire protective system

The documentation of records shall be provided in the form of a FINAL REPORT. The report shall contain for permanent record all information pertaining to the test including the Test Plan, laboratory notebook, all raw data, interpretations, and observations. The report shall provide the documentation of all the above parameters and evidence of calibration to NIST standards for equipment used in obtaining this data (including before and after calibration of thermocouples), and appropriate resolution of any test anomalies. All calculations, conclusions or interpretations shall have been checked and approved by authorized individuals certified by the testing organization to be knowledgeable of the techniques used.

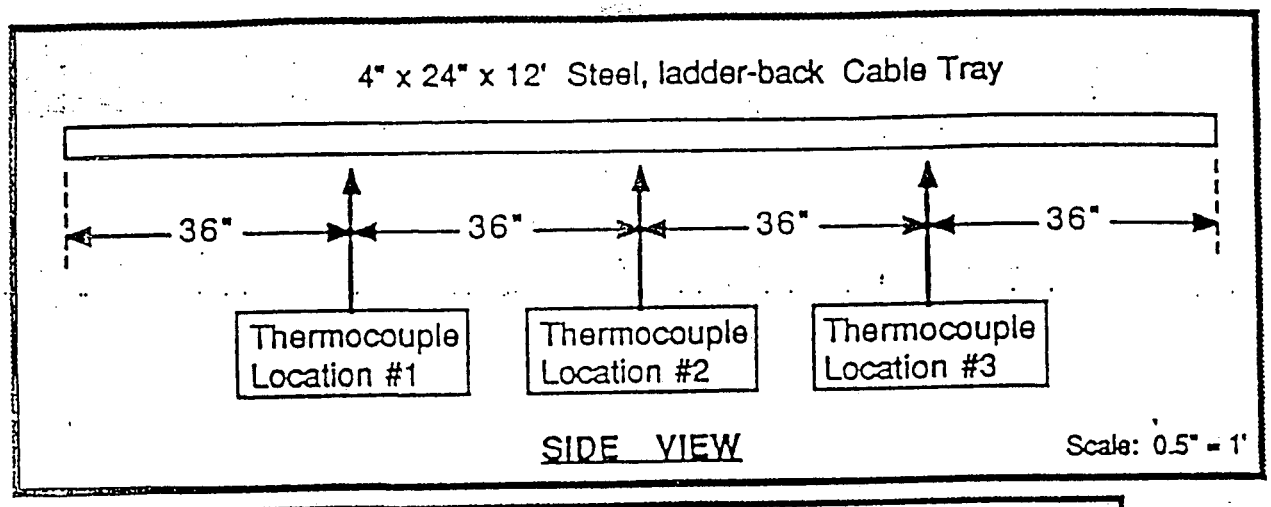

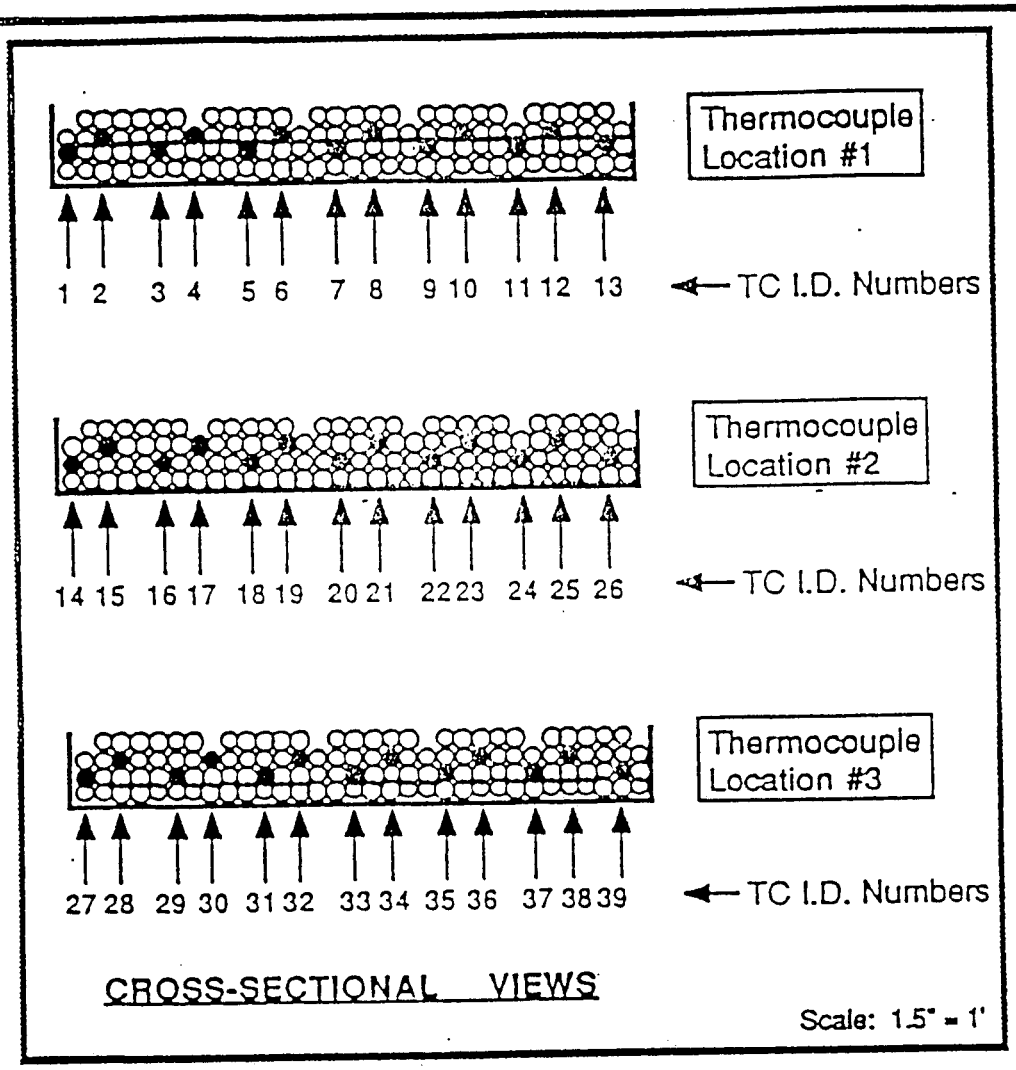

NOTE: Cable tray is to be 100% visual-fill with 3 Conductor #6 AWG Cable. Number of cables = 122. Cable diameter = 0.75 inch.

TRAY AMPACITY DESIGN

Figure 1

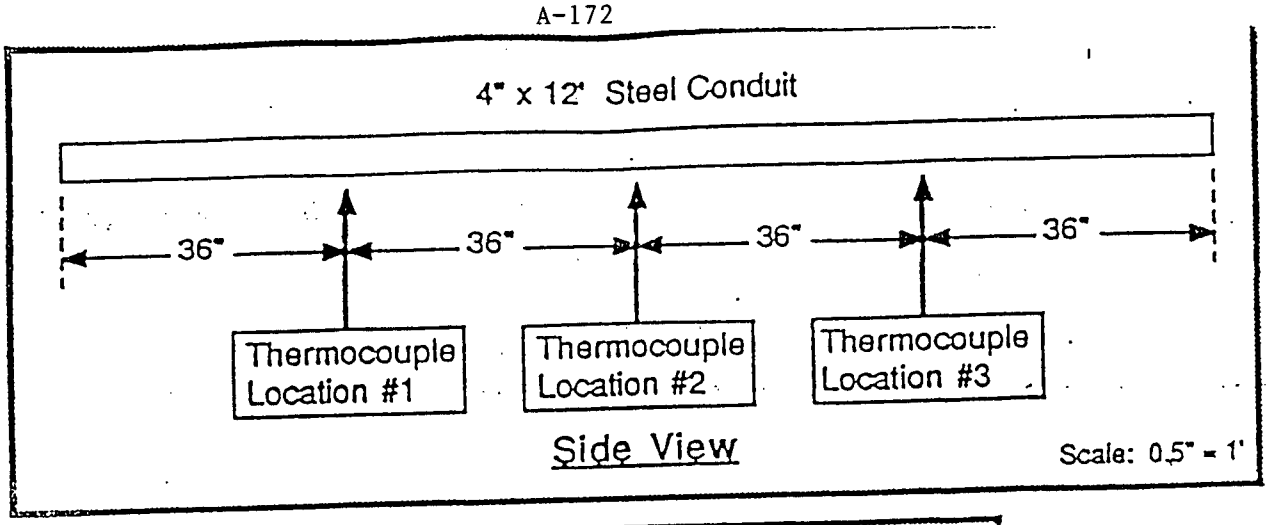

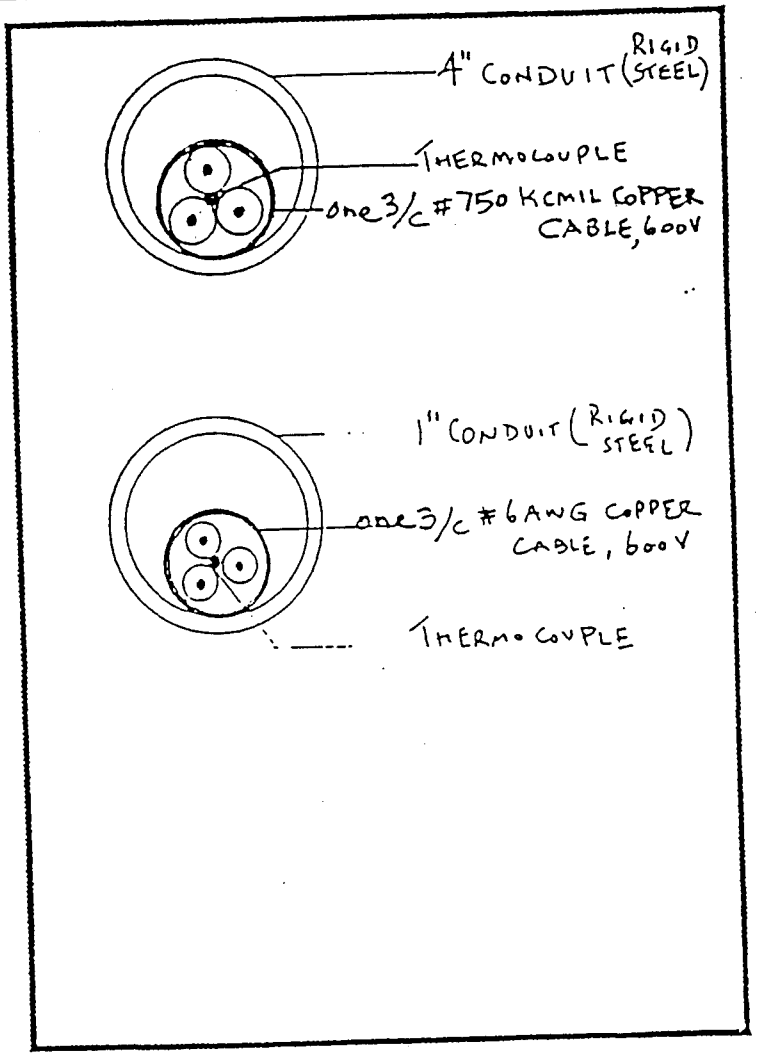

CONDUIT AMPACITY DESIGN

Figure 2

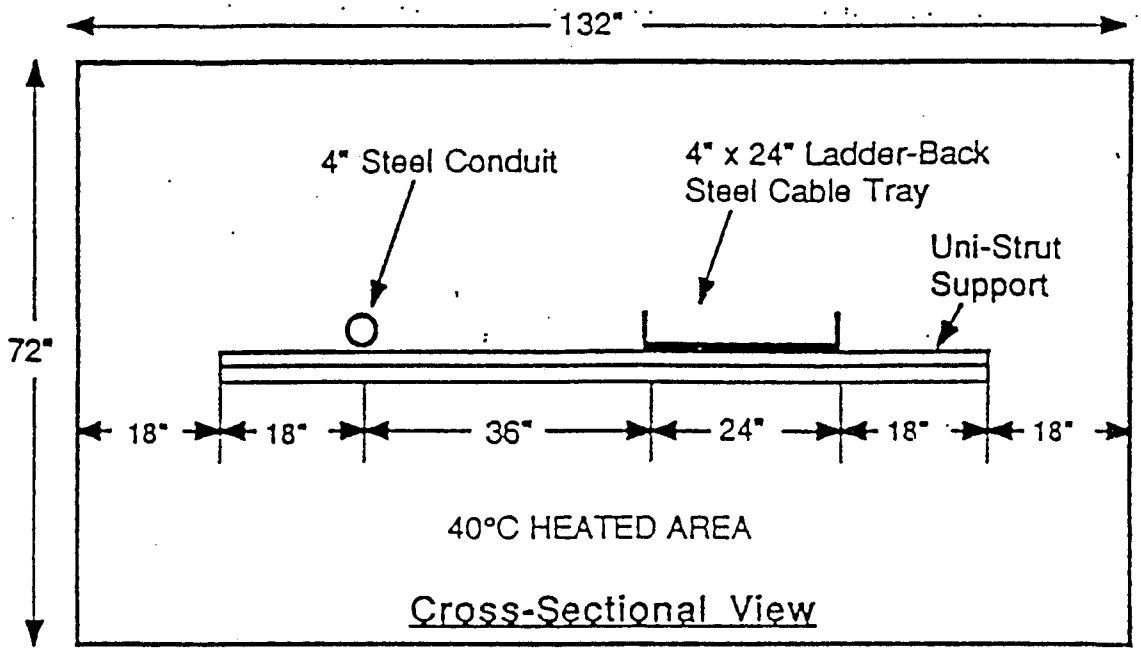

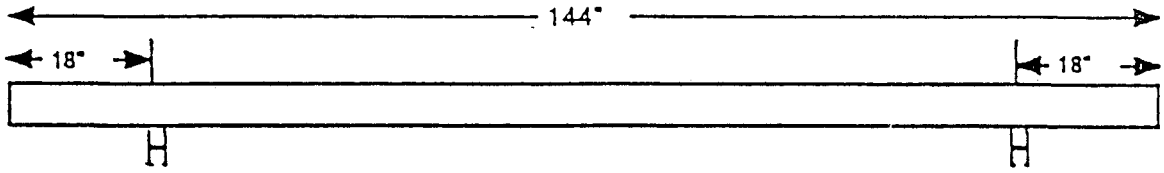

Conduit & Tray Support Points

CONDUIT AND TRAY AMPACITY DESIGN

Figure 3

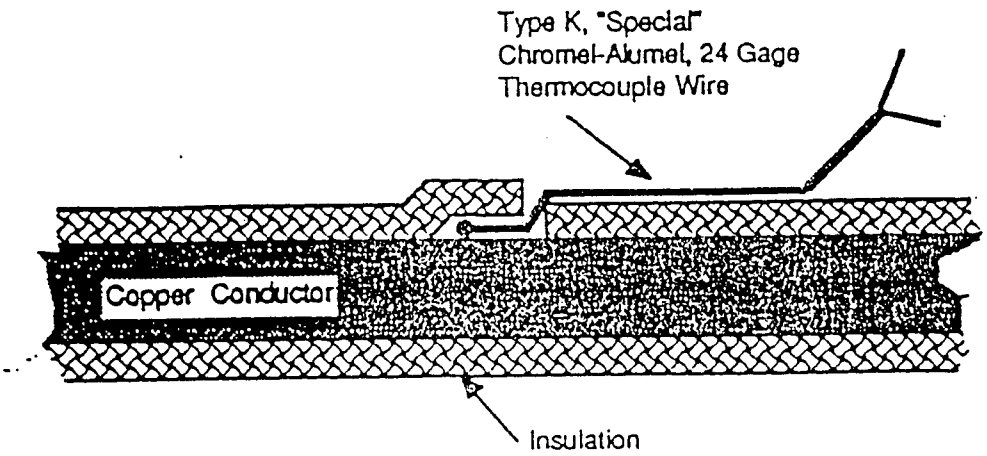

NOTE:

To attach thermo-junction to copper conductor, make an approximately 2 inch long slit in the outer wrap, expose the three conductors, locate the conductor to be instrumented, make a 1 inch slit in the insulation and insert the thermocouple junction in contact with the strands. Close the slit, reposition the wouter wrap and seal with a spiral wind of a single layer of glass-reinforced electrical tape.

Figure 4

P 848/D12 February 24, 1993

IEEE STANDARD

PROCEDURE FOR THE DETERMINATION OF THE

AMPACITY DERATING OF FIRE PROTECTED CABLES

Sponsor

Insulated Conductors Committee of the

IEEE Power Engineering Society

Prepared by Task Force 12-45 of
Test and Measurements Subcommittee No. 12 of
Insulated Conductors Committee

Copyright 1993 by the Institute of Electrical and Electronics
Engineers, Inc.
345 East 47th Street
New York, NY 10017, USA
All rights reserved.

This is an unapproved draft of the proposed IEEE Standard, subject to change. Permission is hereby granted for IEEE Standards Committee participants to reproduce this document for purposes of IEEE standardization activities. Permission is also granted for member bodies and technical committees of ISO and IEC to reproduce this document for purposes of developing a national position. Other entities seeking permission to reproduce this document for standardization or other activities, or to reproduce portions of this document for these or other uses, must contact the IEEE Standards Department for the appropriate license. Use of information contained in this unapproved draft is at your own risk.

IEEE Standards Department
Copyright and Permissions
445 Hoes Lane, P.O. Box 1331
Piscataway, NJ 08855-1331, USA

Foreword

(This Foreword is not a part of IEEE Std. P 848/D12, IEEE Standard - Procedure for the Determination of the Ampacity Derating of Fire Protected Cables)

Many cable installations in nuclear and fossil fuel generating stations require the installation of fire stop, fire protective materials, coating, and electrical separation wrap materials over the cables or the raceway for fire protection or electrical separation purposes. 10CFR50 Appendix R for nuclear plants may require some electrical circuits enclosed in a fire protective material. IEEE 634-1976 specifies requirements for cable penetration fire stops at fire rated walls and floors. Compliance with IEEE 384-1992 may require installation of a wrap material over free air-drop cables or solid covers on cable trays.

Building codes for commercial and industrial facilities in some states require power cables, used in emergency power systems, to remain functional during a fire exposure. This may also necessitate the use of the fire protective material.

As discussed in IEEE 422 and IEEE 690, utility generating stations use cable ampacities provided in ICEA P-46-426 for conduits, spaced cable tray installations and duct bank installations. ICEA P-54-440 is used for cable installation in random filled open-top trays. Commercial, industrial and non-utility owned generating stations utilize cable ampacities published in NFPA-70 (National Electric Code). The National Electric Code permits the use of ICEA P-46-426 and ICEA P-54-440 under the direction of engineers

Fire-protection related products may reduce the heat transfer characteristics associated with the ampacities provided in ICEA P-46-426 and ICEA P-54-440. In future revisions, these ampacity standards may incorporate these new installation conditions on cable ampacity. Not all products, however, may be covered by changes in the ampacity standards due to their limited use to the generating station market. Hence, ampacity testing to determine ampacity derating of fire protected cable systems is necessary.

Several analytical cable ampacity methods are listed in the bibliography to address fire stops, tray enclosure materials, and cable wrap material. The user may consider the applications of these analytical methods to avoid testing of minor differences in the installation of a given product.

Copyright © 1993 IEEE. All rights reserved
This is an unapproved IEEE Standards Draft, subject to change

This standard was prepared by the Task Group on Procedure for the Determination of the Ampacity Derating of Fire Protected Cables, Subcommittee on Tests and Measurements, Insulated Conductors Committee. The membership of the working group during the preparation of this draft was:

A.K. Gwal, Chair
J.L.White, Vice Chair

T.J. Al-Hussaini
P.Bhatia
K.Brown
E.A.Capouch
E.J.Coffey
E.J.D'Aquanno
J.Daly
P.A.Giaccaglia
A.Hiranandani
A.E.Kollar
R.Licht
J.E.Merando
K.A.Petty
K.W.Prier
D.N.Priest
P.D.Skelly
M.Spurlock
W.Torok
F.W.Van Nest
J.G. Waligorski

Copyright © 1993 IEEE. All rights reserved
This is an unapproved IEEE Standards Draft, subject to change

TABLE OF CONTENTS

Section		Page
1	Overview	7
	1.1 Purpose.	7
	1.2 Scope.	7
2	References	8
3	Definitions	9
4	Test Description	9
	4.1 General	9
	4.1.1 Applicability	9
	4.1.2 Method of Testing	10
	4.2 Test Specimens - Protected Cable Systems	10
	4.2.1 Cable Selection	10
	4.2.2 Cable Fill	10
	4.2.3 Conduit	10
	4.2.4 Tray	11
	4.2.5 Free-Air Drop	11
	4.2.6 Fire Protective Material	11
	4.3 Test Specimens - Cable Penetration Fire Stop	11
	4.3.1 Cable Selection	11
	4.3.2 Cable Fill	12
	4.3.3 Conduit	12
	4.3.4 Tray	12
	4.3.5 Floor/Wall Assembly	12
	4.3.6 Fire Stop Design	12
	4.4 Test Facility	13
	4.4.1 Test Enclosure	13
	4.4.2 Test Specimen Installation	13
	4.4.2.1 Tray	13
	4.4.2.2 Conduit	13
	4.4.2.3 Free-Air Drop	13
	4.4.2.4 Cable Penetration Fire Stops	14
	4.4.2.5 Orientation	14
	4.4.2.6 Installation of Fire Protective Systems	14
	4.4.3 Thermocouple Selection and Placement	14
	4.5 Test Procedure	15
	4.5.1 Baseline Evaluation	15

Copyright © 1993 IEEE. All rights reserved
This is an unapproved IEEE Standards Draft, subject to change

4.5.2 Current Source 15
4.5.3 Temperature Measurement 15
4.5.4 Enclosure Temperature 17

5 Evaluation of Test Results 23

5.1 Normalizing Test Results 23

5.2 Ampacity Derating Factor 23

6 Documentation of Testing 24

7 Bibliography 25

Copyright © 1993 IEEE. All rights reserved
This is an unapproved IEEE Standards Draft, subject to change

TABLE OF CONTENTS (cont)

Section | Page

FIGURES

FIG 4-1 Tray Configuration - Protective Cable System 18
FIG 4-2 Conduit and Free-Air Drop Configurations - Protective Cable System 19
FIG 4-3 Configuration- Cable Penetration Fire Stop 20
FIG 4-4 Enclosure and Support Requirements 21
FIG 4-5 Thermocouple Attachment to Conductor 22

Copyright © 1993 IEEE. All rights reserved
This is an unapproved IEEE Standards Draft, subject to change

1 Overview

1.1 **Purpose.** The purpose of this standard is to provide a test procedure for use in establishing the ampacity or ampacity derating factor for cables installed in fire protected conduits, trays, or free air-drops, cable penetration fire stops, or electrical separation wrap systems.

1.2 **Scope.** This standard provides a detailed test procedure for determining the ampacity or derating factor in the following cable installation configurations:

(1) Block-out or sleeve type cable penetration fire stops.

(2) Conduits covered with a protective material.

(3) Tray covered with a protective material.

(4) Tray directly covered or coated with a fire-retardant material.

(5) Free-air drops enclosed with a protective material.

The standard is applicable to cables installed and sized to ICEA P-46-426 for conduits and free air drops, and ICEA P-54-440 for cable tray. ICEA P-46-426 does provide ampacities for cables in a tray with a fixed spacing and may be used for cable penetration fire stop configurations only.

This standard does not endorse the use of or provide application guidance for the installation of cable penetration fire stops and fire protective materials. Cable designs are available which can withstand and remain functional during direct exposure to a fire. The user should refer to IEEE 634 for the qualification requirements of cable penetration fire stops.

Copyright © 1993 IEEE. All rights reserved
This is an unapproved IEEE Standards Draft, subject to change

2 References

ANSI-IEEE Std 100-1990, Standard Dictionary of Electrical and Electronics Terms 4th Edition.

Cross-Linked Thermosetting Polyethylene-Insulated Wire and Cable for the Transmission and Distribution of Electrical Energy. Washington, D.C.: National Electrical Manufacturers Association, 1990. ICEA S-66-524 (NEMA WC 7-1988).

Ethylene Propylene Rubber-Insulated Wire and Cable for the Transmission and Distribution of Electrical Energy. Washington, D.C.: National Electrical Manufacturers Association, 1989. ICEA S-68-516 (NEMA WC 8-1988).

ICEA Standard for Power Cable Ampacities. Washington, D.C.: National Electrical Manufacturers Association, 1962. Reprinted by IEEE under S-135. ICEA P-46-426.

ICEA Standard for Ampacities - Cables in Open-Top Cable Trays. Washington, D.C.: National Electrical Manufacturers Association, 1991; NEMA WC-51. ICEA P-54-440.

IEEE Std. 384-1992, IEEE Standard Criteria for Independence of Class 1E Equipment and Circuits.

IEEE Std. 422-1986, IEEE Guide for the Design and Installation of Cable Systems in Power Generating Stations.

IEEE Std. 690-1984, IEEE Standard for the Design and Installation of Cable Systems for Class IE Circuits in Nuclear Power Generating Stations.

IEEE Std. 634-1978, IEEE Standard Cable Penetration Fire Stop Qualification Test.

Rubber-Insulated Wire and Cable for the Transmission and Distribution of Electrical Energy. Washington, D.C.: National Electrical Manufacturers Association, 1980. ICEA S-19-81 (NEMA WC 3-1980).

The National Electric Code, National Fire Protection Association, NFPA 70-1990, Quincy, MA.

Copyright © 1993 IEEE. All rights reserved
This is an unapproved IEEE Standards Draft, subject to change

3 Definitions

3.1 ampacity derating factor: A numeric value representing the fractional reduction from a base ampacity cable rating. Ampacity derating factors are associated with specific installation conditions not presently addressed in the base ampacity.

3.2 ampacity correction factor: A numeric value equal to one minus the ampacity derating factor.

3.3 cable penetration fire stop: Material, devices or an assembly of parts providing ;cable penetrations through fire-rated walls, floors, floor-ceiling assemblies, and maintaining required fire rating.

3.4 cable tray: A raceway resembling a ladder and usually constructed of metal. Other styles of trays include solid-bottom, and channel type.

3.5 fire protected cable systems: Cable systems to which a fire protective enclosure material has been applied either in direct contact with the cables or applied over the raceway to protect cables from fire.

3.6 fire retardant coatings: Material applied along the length of cables or in localized areas, as deemed necessary, to retard the flame propagation properties of cables in trays.

3.7 raceway: Any channel that is designed and used expressly for supporting or enclosing wires, cable or bus bars. Raceways consist primarily of, but are not restricted to, cable trays and conduit.

4 Test Description

4.1 General

4.1.1 Applicability This method shall apply to cables manufactured in accordance with either ICEA S-66-524, ICEA S-19-81, or ICEA S-68-516 and rated either 600, 2 000, 5 000, 8 000, or 15 000 V. This test is limited to cables installed in the following configurations:

(1) Tray with a fire protected cable system where cables are arranged consistent with ICEA P-54-440.

Copyright © 1993 IEEE. All rights reserved
This is an unapproved IEEE Standards Draft, subject to change

(2) Conduit or free air drop with a fire or electrical separation protected cable system.

(3) Block-out, conduit or sleeve type penetration type fire stop.

4.1.2 **Method of Testing** Cable ampacity or ampacity derating factor shall be established by testing in accordance with the configurations shown in Figures 4-1, 4-2, and 4-3. Test results may also be used to confirm analytical heat transfer models.

4.2 Test Specimens - Protected Cable Systems

4.2.1 **Cable Selection** The cables used in the ampacity tests shall have copper conductor(s), 600 V rated cross-linked polyethylene or ethylene-propylene rubber insulation and a chlorosulfonated polyethylene jacket. Depending on the specific test (as outlined below) the cables shall be rated 600 V and of either 3/C No.6 AWG, 3- 1/C 750 kcmil construction. If a user opts to test using conduits sizes other than 1 and 4 inch (see section 4.2.3) then a 3/C, triplex or 3-1/C cable shall be chosen to achieve the maximum allowable fill. When 1/C cables are used for conduit or free air drops, they shall be tie wrapped at intervals not to exceed 2 feet.

4.2.2 **Cable Fill** The ampacity of a protected cable system is dependent on a number of factors, including: the actual cable depth in a tray, the number of conductors in a conduit and free air-drop, and the conductor size of the cables. The ampacity derating factor of the barrier/wrap systems, however, is not dependent on the these conditions. In order to avoid introducing other types of derating factors, e.g. multiple conductors in a conduit or close conduit grouping factors, the following cable fill conditions shall be used.

(1) Random filled tray: Three layers of 3/C No.6 AWG cables, 0.75 inch diameter, 32 cables per layer, resulting in a depth of 2.25 inches for the 24 inch wide tray.

(2) Conduit: Single circuit of three conductors sized to match the conduit in accordance with NFPA-70 or the largest commercially available size, not to exceed 750 kcmil, generally used in conduits. (See Section 4.2.1)

(3) Free-Air Drop: Fill requirements do not apply.

4.2.3 **Conduit** Conduit ampacity tests shall utilize 1 and 4 inch rigid steel conduits. Tests conducted using these two sizes shall be considered representative of all sizes provided that the fire protective system installation methods and configurations are consistent across the entire size range. Where the installation methods, configurations, or fit differ according to conduit size the user shall test sizes to bound the

Copyright © 1993 IEEE. All rights reserved
This is an unapproved IEEE Standards Draft, subject to change

specific application. Conduits shall be a minimum of 12 ft long. The conduit shall be isolated from its supporting structure by wooden blocks.

In addition to the conduit, the junction boxes and pull boxes may also be enclosed with a protective material. Since the surface area of the boxes is significantly greater than the conduit, heat transfer is improved proportionally. Therefore, junction boxes and pull boxes do not need to be included in the ampacity test.

4.2.4 **Tray** A commercially available 4 inch deep - 24 inch wide ladder-back style steel cable tray, a minimum of 12 ft long shall be used. The tray shall be isolated from the support by wooden blocks.

4.2.5 **Free-Air Drop** Ampacity tests shall be conducted on free air drop configurations consisting of 1-3/C No.6 AWG and 3-1/C 750 kcmil, respectively. Tests conducted using these two sizes shall be considered representative of all sizes provided that the fire protective system installation methods and configurations are consistent across the entire size range. Where the installation methods, configurations, or fit differ according to size the user shall test sizes to bound the specific application. Free air drops shall be a minimum of 12 ft long. The test specimen shall be supported to prevent sagging and shall be isolated from its supporting structure by wooden blocks.

4.2.6 **Fire Protective Material** The protective material shall be representative of the installed product at maximum thickness. If the product is typically applied in a non-uniform manner, e.g. overlap joint when product is butted, then these sections shall be included in the test.

Some fire-protected cable systems utilize an end seal where the barrier or wrap ends in order to prevent the intrusion of hot gases or fire into the end of the tray or conduit. If end seal is less than six inches, then the seal may be excluded from the test. Otherwise, the end seal should be treated and tested in a similar manner to cable fire stop, except the wall section is excluded.

4.3 Test Specimens - Cable Penetration Fire Stop

4.3.1 **Cable Selection** The ampacity of the cable in a cable penetration fire stop varies with cable conductor size, conductor material, and manner of cable installation outside the fire stop. Tests conducted using a 600 V 3/C No. 12 AWG, aluminum conductor with cross-linked polyethylene insulation and an overall chlorosulfonated polyethylene jacket shall be considered representative of other voltage ratings, conductor sizes and copper or aluminum conductors installed in random filled tray. Tests on single conductor 2/0 AWG aluminum conductor 600 V, with cross-linked polyethylene insulation and a chlorosulfonated polyethylene jacket shall be considered to be representative of cables installed in trays with maintained spacing. Tests performed using copper

Copyright © 1993 IEEE. All rights reserved
This is an unapproved IEEE Standards Draft, subject to change

conductor cables may be used only to establish the derating factors for applications using copper conductor.

In cable bus applications, where larger conductor sizes are generally used, cable specimen shall be the smallest conductor in the anticipated use range. Aluminum conductor material shall be used, unless design is limited to copper conductors.

4.3.2 Cable Fill The tray shall be filled to a one inch depth. The corresponding current in ICEA P-54-440 shall be applied.

Ampacity tests on fire stops installed in trays with maintained spacing (per ICEA P-46-426) shall be conducted on a single layer of 2/0 cables separated by one diameter.

Plant specific design conditions may be tested. However, the results may not be extrapolated to lower percentage filled cable trays.

Conduit fill shall be identical to that specified in Section 4.2.2.

4.3.3 Conduit The conduit specimen shall be identical to that used in section 4.2.3., except that the length of the conduit shall be twenty feet. No fire protective material shall be applied to the conduit other than the fire stop.

4.3.4 Tray Tray specimen shall be identical to that used in section 4.2.4, except the length of the tray shall be twenty feet plus the width of the wall. No fire protective material shall be applied to the tray other than the fire stop.

4.3.5 Floor/Wall Assemblies The type of floor/wall construction and thickness affect the ampacity derating of the system. Thicker floors/walls shall be representative of thinner floors/walls of the same construction. Floors/walls constructed of lower thermal conductive materials shall be representative of floors/walls of higher thermal conductive materials.

The floor/wall assembly must maintain a minimum of 24 inches from its outer edge to the edge of the blockout.

For floor assemblies, the raceways may contain 90 degree bends located at a minimum of 24 inches from each surface of the floor assembly.

4.3.6 Fire Stop Design The fire stop configuration to be ampacity tested shall be representative of the maximum permitted installation tolerances, in contrast to fire tests which are typically conducted on fire stops at the minimum tolerance.

4.4 Test Facility

Copyright © 1993 IEEE. All rights reserved
This is an unapproved IEEE Standards Draft, subject to change

4.4.1 Test Enclosure The ampacity test shall be conducted in an enclosure as shown in figure 4-4, such that the temperature around the specimen shall be controlled to 40°C +/- 2°C. The enclosure shall ensure an even temperature and shall limit drafts on the test specimen. The temperature inside the enclosure shall be measured at no less than three places one foot from the specimen, and in the horizontal plane of the test specimen. The temperature of the enclosure shall be taken as the average of the steady state measurements.

4.4.2 Test Specimen Installation

4.4.2.1 Tray The tray is to be uniformly loaded with a single type of cable. The cables shall be installed in an orderly, symmetric manner, so as to limit the flow of air through the cables and to ensure repeatability. Cable tie wraps shall not be used within the tray.

The cables shall be connected as a single series electrical circuit.

When testing the protected cable systems, a section of insulating blanket shall be placed at the ends of the tray to minimize axial heat flow, such that the average values for the thermocouples at locations 1 and 3 (see Figure 4-1) are within +/- 4°C of the average value for location 2.

4.4.2.2 Conduit The cables shall be pulled into the conduit after installation of the thermocouples. No pulling lubricant shall be used. When three single conductor cables are utilized for the conduit tests, the cables shall be bundled with stainless steel tie wraps or glass cloth electrical tape to ensure thermocouple placement is maintained during insertion or removal.

The cables shall be connected as a single series electrical circuit.

A section of insulating blanket shall be placed at the ends of the conduit to minimize axial heat flow, such that the average values for the thermocouples at locations 1 and 3 (see Figure 4-2) are within +/- 4°C of the average for location 2.

4.4.2.3 Free-Air Drop The cables shall be connected as a single series electrical circuit. When three single conductor cables are utilized for these tests, the cables shall be bundled with stainless steel tie wraps or glass cloth electrical tape to ensure thermocouple placement is maintained.

A section of insulating blanket shall be placed at ends of the free air-drop to minimize axial heat flow, such that the average values for the thermocouples at locations 1 and 3 (see Figure 4-2) are within +/- 4°C of the average for location 2.

Copyright © 1993 IEEE. All rights reserved
This is an unapproved IEEE Standards Draft, subject to change

4.4.2.4 Cable Penetration Fire Stop The cables and raceway penetrating the fire stop floor/wall shall be installed in an identical fashion as during fire testing. This may include special spacing requirements. If the fire stop design permits installation of the cables on the tray rungs or directly on the blockout surface, the bounding condition is considered to be with the cables placed on the tray rungs.

4.4.2.5 Orientation The fire protected raceway test specimens shall be mounted horizontally in order to model worst case orientation and to prevent a "chimney-effect." In the case of fire stop tests, open ends of enclosed raceways must be sealed to eliminate air movement.

4.4.2.6 Installation of Fire Protective Systems The tray and conduit is to be raised off its support after completion of the baseline tests. The protective system shall then be applied in accordance with the method established in the fire or electrical separation testing. The entire assembly shall be lowered back onto the supports while ensuring the assembly is not cracked or otherwise distorted. If the protective system can be removed without disturbing the cables or thermocouple placement, then the baseline tests may be performed before or after testing the protective cable system.

If the product undergoes a curing operation, the test specimen's dry state shall be established by the manufacturer and achieved prior to the test through natural or artificial drying.

If the product is reactive at temperatures below 90°C, then the equilibrium time must be extended based on specific analysis.

4.4.3 Thermocouple Selection and Placement Thermocouples shall be a maximum of 24 AWG, Type T special grade - Copper Constantan with an accuracy of +/- 0.5°C or other thermocouple types which have been calibrated to the same level of accuracy. Thermocouple wire shall have waterproof insulation. Thermocouples shall be placed directly against the conductor.

To attach the thermojunction to the cable, make an approximately 2 inch long slit in the outer jacket of the cable, to expose the insulated conductors. Make a one inch slit in the insulation as shown in Figure 4-5. Insert the thermocouple junction in direct contact with the conductor strands. For three conductor cables, close the insulation slit and seal with a single layer of glass-reinforced electrical tape. For single and three conductor cables, reposition the outer jacket and seal with a single layer of glass-reinforced electrical tape.

The test is intended to identify the temperature of the hottest conductor within the center of the protected cable system and cable penetration fire stop. A set of thermocouples shall be installed at each of the vertical

Copyright © 1993 IEEE. All rights reserved
This is an unapproved IEEE Standards Draft, subject to change

planes along the length of the cable as shown in Figures 4-1, 4-2, and 4-3. Conduit and free-air drops shall have the thermocouples placed on all three conductors. Within the tray assembly, thermocouple leads shall remain in the layer in which they are installed and be routed out the end of the tray in the interstices of the cable mass. For fire protected raceways, the following number of thermocouples shall be placed in each vertical plane:

(1) tray configuration - 5

(2) conduit and free-air drop - 3

For ampacity tests of tray penetration fire stops, 5 thermocouples shall be placed on the conductors in the fire stop in accordance with Figure 4-1. One additional thermocouple shall be placed at 2 foot intervals on one conductor of the center cable in the middle layer on each side of the firestop. (Figure 4-3)

For ampacity tests of conduit or free-air drop penetration fire stops, 3 thermocouples shall be placed on the conductors in the fire stop in accordance with Figure 4-2. One additional thermocouple shall be placed at 2 foot intervals on each side of the fire stop.

4.5 Test Procedure

4.5.1 Baseline Evaluation At least one baseline test for each system, i.e. tray, conduit, free air drop, shall be conducted in order to establish baseline ampacities. Baseline evaluation for a tray assembly must be performed on the same physical specimen used for the derating test. Baseline and derating evaluations for conduits and free-air drops shall be performed using the same instrumented cable set.

4.5.2 Current Source The circuit shall be energized with a 60 Hz, single phase source sufficient to cause the conductor to reach 90°C at location 2 in Figures 4-1, 4-2, and location 1 in Figure 4-3. The current shall be measured to an accuracy of +/- 0.5%. The use of a constant-current amplifier is recommended since the increasing temperature changes the circuit load, i.e. conductor resistance. Alternatively, process control devices can be used to generate and maintain the current source.

4.5.3 Temperature Measurement All temperatures shall be recorded at intervals no greater than one minute. The current in each test circuit shall be adjusted to achieve a hot spot conductor temperature of 90°C +/- 1°C at location 2 for the protected cable systems and location 1 for cable penetration fire stop. The average temperature of thermocouple locations 1 and 3 for the protected cable systems shall be within +/- 4°C of the average temperature reading at location 2. No restrictions are placed on the temperature readings at locations outside the cable penetration fire stop.

Copyright © 1993 IEEE. All rights reserved
This is an unapproved IEEE Standards Draft, subject to change

The cable circuit is considered to be have reached steady state condition when:

(1) A minimum of three hours since the last adjustment of current level or perturbation of the system occurred, and

(2) The rate of change of the average of thermocouple reading at hottest spot (location 2 for Figures 4-1 and 4-2, and location 1 for Figure 4-3) does not exceed +/- 0.2°C per hour for conduit, tray, and free-air drop.

Perturbation of the system conditions includes current adjustment, change in the internal temperature of the enclosure, and addition or removal of insulation on the ends of the tray, conduit or free-air drop. Minor adjustment of current ($\leq$ 0.5%) required to keep the current constant is not considered a perturbation of the system.

In order to statistically assure thermal equilibrium, the conductor temperatures shall be averaged at each sampling period. A linear regression analysis using the least-squares method shall be performed on the data obtained over the preceding 60 minute period. The slope of the line shall be expressed in units of °C per hour. When the absolute value of the slope becomes less than 0.2, equilibrium has been reached.

The degrees of freedom obtained by averaging many thermocouple locations, allows the precision to exceed the +/- C limit of any one thermocouple.

The equations for a linear regression using the least squares fit method are shown below:

$$Y = m X + b \tag{1}$$

$$X = \sum \frac{X}{n} \tag{2}$$

$$Y = \sum \frac{Y}{n} \tag{3}$$

$$m = \frac{\sum X Y - \frac{\sum X \sum Y}{n}}{\sum X^2 - \frac{(\sum X)^2}{n}} \tag{4}$$

Copyright © 1993 IEEE. All rights reserved
This is an unapproved IEEE Standards Draft, subject to change

$$b = Y - m X \tag{5}$$

Where:

Y	is the average conductor temperature C
X	is the time increment (min)
m	is the slope of line (C/min)
b	is the Y-axis intercept, C

4.5.4 Enclosure Temperature The temperature within the test enclosure shall be controlled to 40 +/- 2 C. Some induced air movement within the enclosure is necessary to achieve uniform steady-state temperatures. Care must be taken to avoid direct air currents against the test specimens. The method of ambient temperature control within the test enclosure is important. Care must be taken to avoid any additional heat loading on the cables by radiation from a heat source.

Copyright © 1993 IEEE. All rights reserved
This is an unapproved IEEE Standards Draft, subject to change

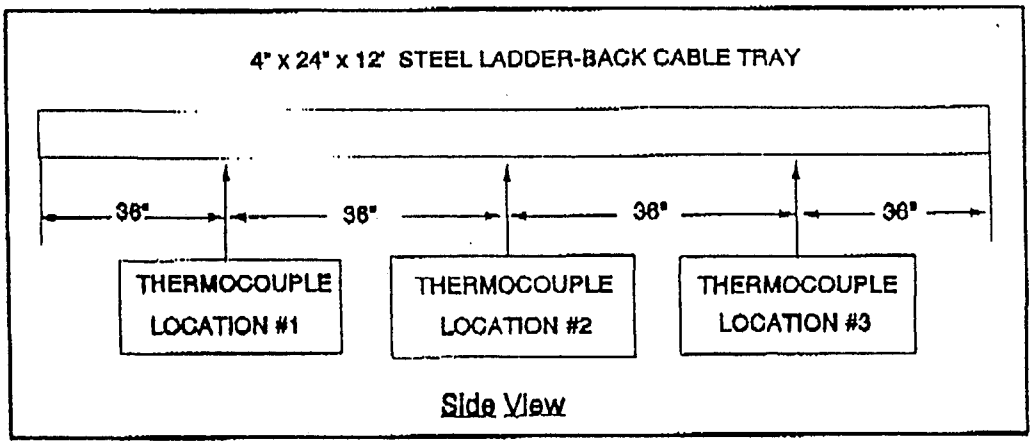

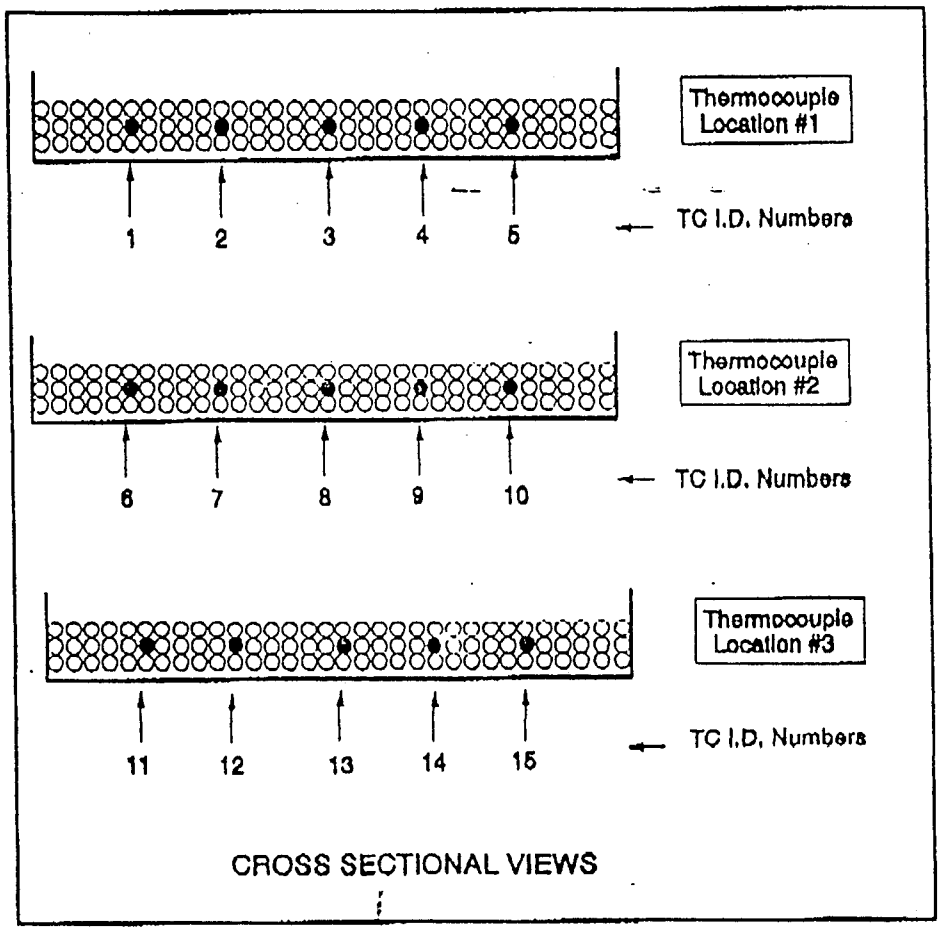

FIG 4-1
Tray Configuration - Protective Cable System

Copyright © 1993 IEEE. All rights reserved
This is an unapproved IEEE Standards Draft, subject to change

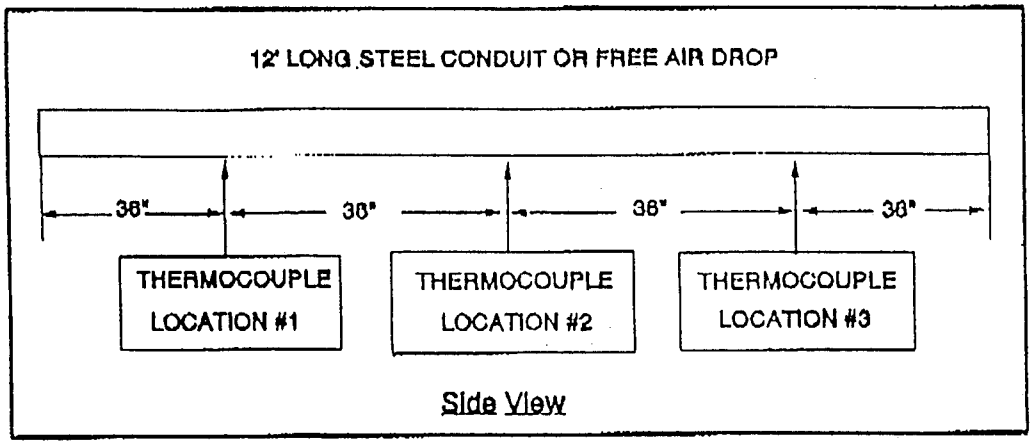

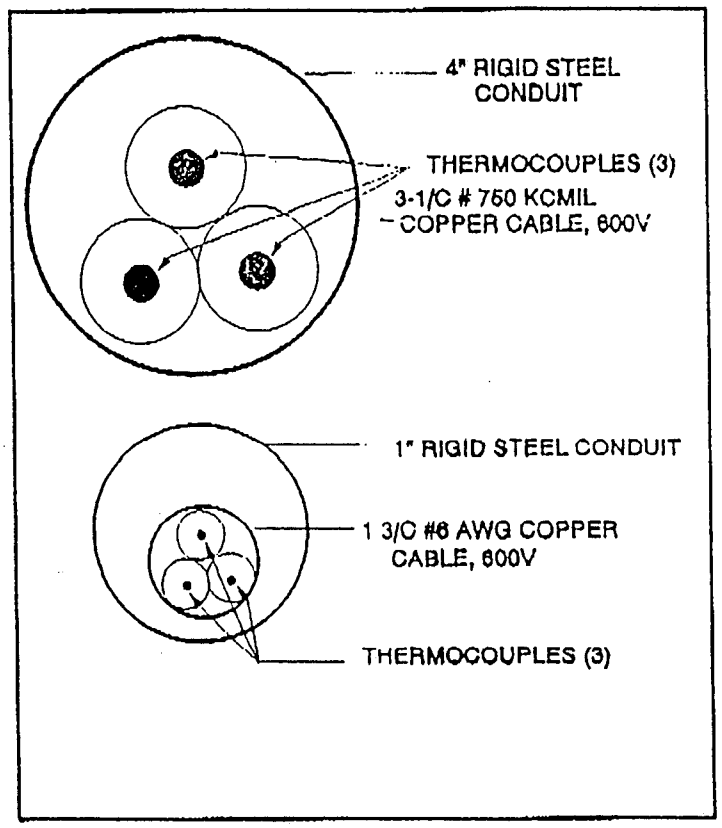

FIG 4-2
Conduit and Free-Air Drop Configurations
- Protective Cable System

Copyright © 1993 IEEE. All rights reserved
This is an unapproved IEEE Standards Draft, subject to change

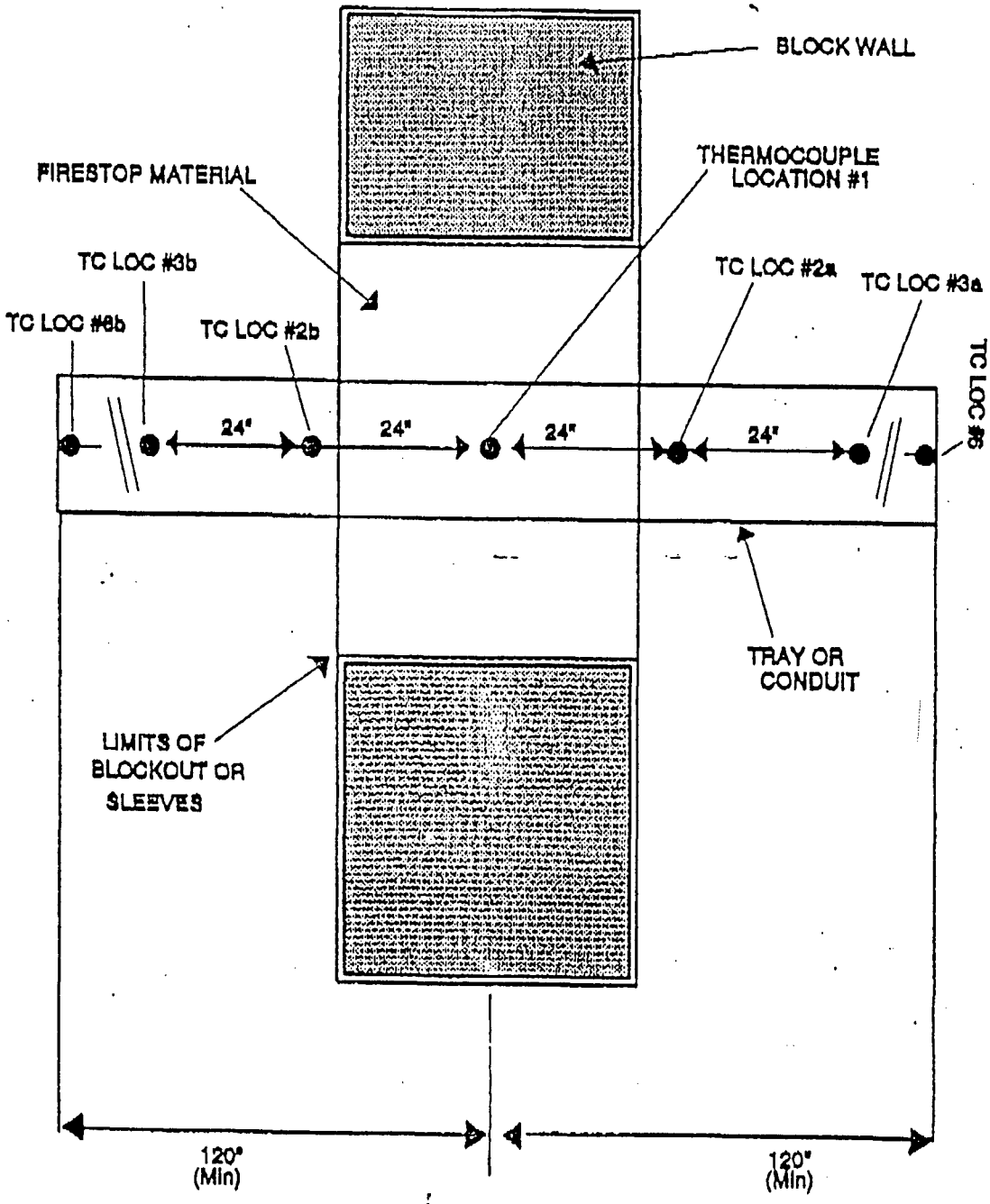

FIG 4-3
Configuration- Cable Penetration Fire Stop

Copyright © 1993 IEEE. All rights reserved
This is an unapproved IEEE Standards Draft, subject to change

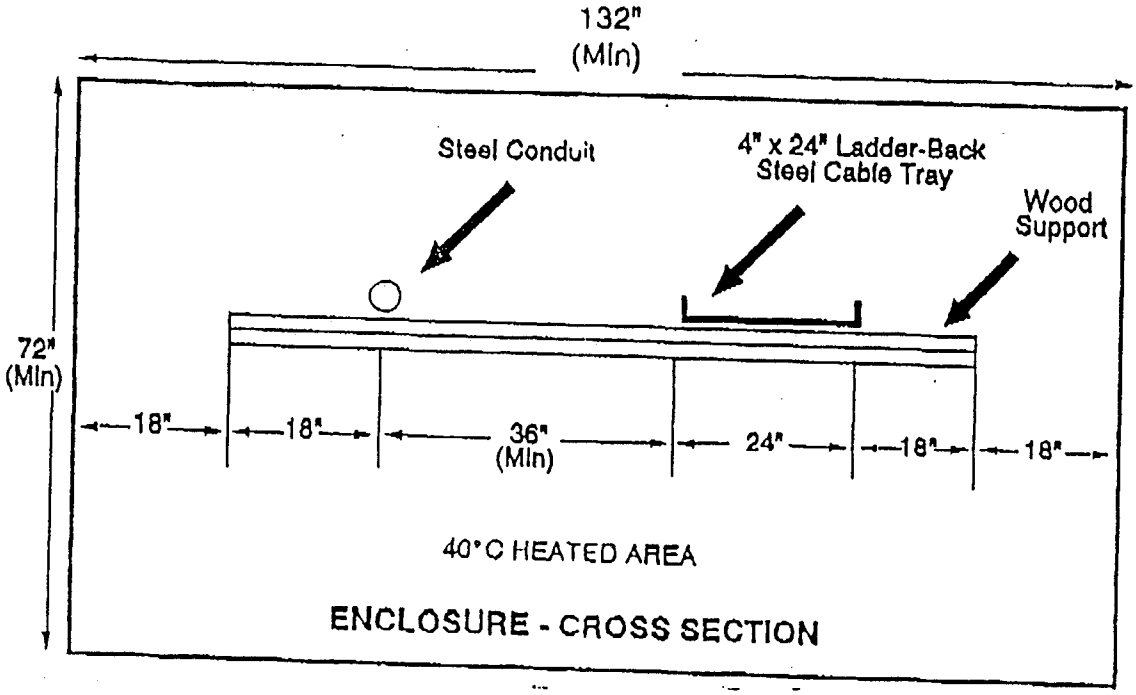

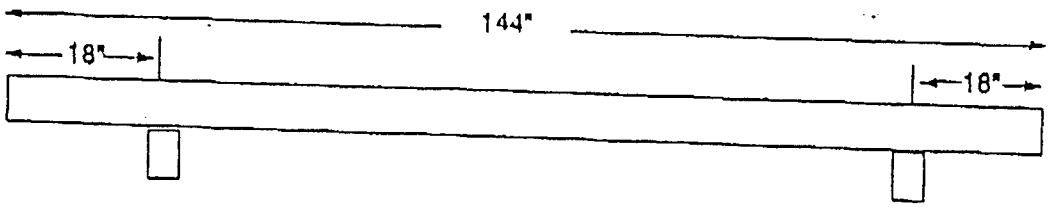

CONDUIT & TRAY SUPPORT POINTS

FIG 4-4
Enclosure and Support Requirements
- Protective Systems

Copyright © 1993 IEEE. All rights reserved
This is an unapproved IEEE Standards Draft, subject to change

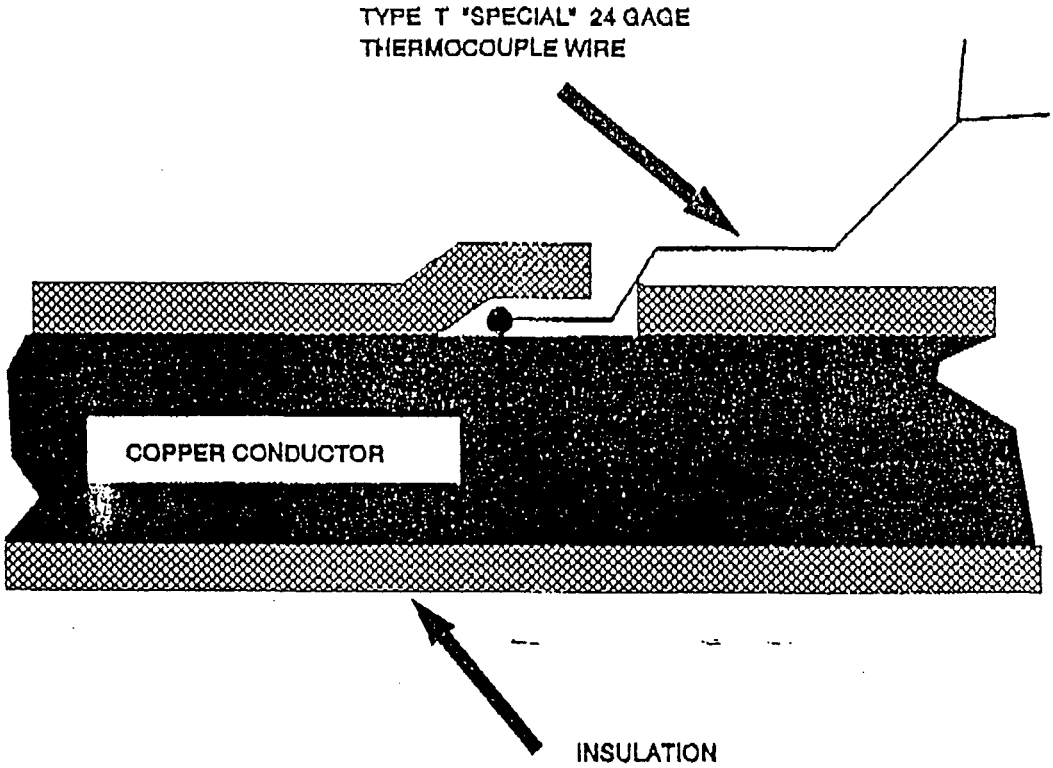

FIG 4-5
Thermocouple Attachment to Conductor

Copyright © 1993 IEEE. All rights reserved
This is an unapproved IEEE Standards Draft, subject to change

5 Evaluation of Test Results

5.1 Normalizing Test Results

After equilibrium has been achieved, the final conductor temperature and the ambient temperature may not match 90 C and 40 C respectively. The results of the baseline and the fire protected cable system tests must be normalized using equation 6 below. The conductor temperature shall be the hottest conductor temperature at location 2 for the protective cable system and location 1 for cable penetration fire stop. The final temperatures must be within the limits established in Section 4.5.4 and 4.5.3.

$$I' = I\sqrt{\frac{(Tc' - Ta')\ (\alpha + Tc)}{(Tc - Ta)\ (\alpha + Tc')}} \qquad (6)$$

where

I	test current at equilibrium, amperes
Tc	hottest conductor temperature at center at equilibrium, C
Ta	measured enclosure ambient temperature, C
I'	normalized current, amperes
Tc'	normalized conductor temperature - 90 C
Ta'	normalized ambient temperature - 40 C
alpha	234.5 for copper or 228.1 for aluminum

5.2 Ampacity Derating Factor

Using the normalized current, as determined from section 5.1, an ampacity derating factor can be calculated using the results of the baseline test and the protected cable system or cable fire stop. The ampacity derating factor (ADF) and ampacity correction factor (ACF) shall be calculated using equations 7 and 8. The user may find it may convenient to express the ampacity results as ampacity correction factor (ACF) for calculation purposes. ACF is applied in a similar fashion as conduit grouping factors and ambient temperature correction factor as shown in ICEA P-46-426.

$$ADF = \frac{(Io - If)}{Io}100 \qquad (7)$$

Copyright © 1993 IEEE. All rights reserved
This is an unapproved IEEE Standards Draft, subject to change

$$ACF = \frac{If}{Io} \quad (8)$$

Where

Io	is the normalized current for the baseline condition, amperes
If	is the normalized current for the passive fire protected cable system or cable penetration fire stop system.
ADF	is the ampacity derating factor, %
ACF	is the ampacity correction factor

Ampacity derating factors shall be expressed in conjunction with reference to its baseline ampacity standard. This is especially important for cable penetration fire stops where the cable installation method outside the wall has a major influence on the resulting derating factor. Cable Fire stop ampacity derating factor is also restricted in terms of conductor size and material.

Examples illustrating how the ampacity derating factors must be expressed are shown below.

(1) ADF = 18 %, Floor Assembly-Fire Stop Penetration, Product design AAA, applied against ICEA P-46-426 "conduit in air ampacities" for 12 AWG aluminum or copper conductors and larger.

(2) ADF = 7 %, Wall Assembly Fire Stop Penetration, Product design AAA, applied against ICEA P-46-426 "conduit in air ampacities" for 1000 kcmil copper conductors or 1250 kcmil aluminum conductor and larger.

(3) ADF = 20 %, Fire Protective Material - Tray Application, Product design BBB, when applied against ICEA P-54-440.

(4) ADF = 18 %, Electrical Separation Wrap - Free Air Drop, Product design CCC, when applied against ICEA P-46-426 "in free air" ampacities.

6 Documentation of Testing

The test report and the resulting derating factor shall include the following documentation:

(1) Description of the test configuration

(2) Date of the test

(3) Location of the test

(4) Description of the test equipment and test articles

Copyright © 1993 IEEE. All rights reserved
This is an unapproved IEEE Standards Draft, subject to change

(5) Calibration documentation of all thermocouples

(6) Qualification and certification for test personnel

(7) Test procedures used.

(8) Ampacity values determined and accompanying equilibration temperatures.

(9) Provide quality control records for:

(a) Test article construction

(b) Qualification and certification for installation and inspection personnel

(c) Identification and installation of fire barrier material

(d) Thermocouple locations

(e) Cables, size, type, and location

(f) Actual tray and conduit cable fill, and calculated depth of cable fill as defined in ICEA P-54-440

(10) Computer printout and graphic results of the ampacity test

(11) All raw data

(12) 35 mm photographic coverage of the test project

(13) Documentation that product does or does not react at temperatures below 90°C.

(14) Documentation that moisture equilibrium has been achieved.

7 Bibliography

[B1] Stolpe, J., "Ampacities for Cables in Randomly Filled Trays", IEEE Transactions on Power Apparatus and Systems, Vol PAS 90, pp 962-973, 1971

[B2] Nemeth, C.W., RackLiffe, G.B., Legro, J.R., "Ampacites for Cables in Trays with Firestops" IEEE Transactions on Power Apparatus and Systems, Vol PAS 100, No. 7 July 1981

[B3] Herter, V.J., Barry, R.E., Began, T.A., "Ampacity Test of a Silicone Foam Firestop in a Cable Tray" IEEE Transactions on Power Apparatus and Systems, Vol PAS 100, No. 7 July 1981

[B4] Esteves, O.M., "Derating Cables in Trays Traversing Firestops or Wrapped Fireproofing" IEEE Transactions on Power Apparatus and Systems, Vol PAS 102, pp. 1478-1481, 1983

Copyright © 1993 IEEE. All rights reserved
This is an unapproved IEEE Standards Draft, subject to change

[B5] Petty, K.A. "Ampacity of Wrapped Cables" IEEE Transactions on Power Delivery Vol 3 No 1, January 1988

[B6] Hiranandani, A.K. "Rating Power Cables in Wrapped Cable Trays" IEEE Transactions on Power Delivery Vol 3 No 1, January 1988

[B7] Save, P., Engmann, G. "Fire Protection Wrapped Cable Tray Ampacity" IEEE Transactions on Power Generation Vol No , 1989

Copyright © 1993 IEEE. All rights reserved
This is an unapproved IEEE Standards Draft, subject to change

EXCEPTIONS TO IEEE P848/D11

Procedure for the Determination of the Ampacity Derating of Fire Protected Cables

1. Section 5.2.4 states the conduit shall be 12 feet long and supported 18 inches from each end.

   Exception: The conduit is 20 feet long and supported 5 feet from each end.

   Basis: The longer specimen will reduce the affects of heat transfer on the measured temperature. Draft 12 states a minimum of 12 feet.

2. Section 5.3.1 references Figure 3 which shows the enclosure width 132 inches.

   Exception: The enclosure width is 96 inches.

   Basis: The enclosure will be used only for conduit; no trays will be tested so the 96-inch enclosure will be sufficient.

3. Section 5.3.2.2 Part b states that 1-3 conductor 750 MCM copper cable will be used.

   Exception: Three single conductor 750 MCM cables will be bundled together to simulate 1-3 conductor.

   Basis: Draft 12 of the standard states that 3 single conductors can be used.

4. Section 5.3.2.5 states that Type K special grade thermocouples will be used.

   Exception: Type T thermocouples with an accuracy of $\pm$ .5°C will be used.

   Basis: Type T thermocouples verified to be within $\pm$ .5°C are more accurate than the type K special grade. Draft 12 of the standard states that Type T special grade thermocouples or a thermocouple of equivalent accuracy will be used.

5. Section 5.3.2.5 states that three thermocouples will be used to determine the conductor temperatures.

   Exception: Nine thermocouples will be used. Three thermocouples will be used in each conductor.

   Basis: Draft 12 states that three thermocouples will be used in each vertical plane.

EXCEPTIONS TO IEEE P848/D11 (CONTINUED)

Procedure for the Determination of the Ampacity Derating of Fire Protected Cables

6. Section 5.3.2.6 states the testing is to be sequential so that one conduit and cable is to be used for all of the testing.

   Exception Four 4" and four 1" conduits are being used for the test.

   Basis: The same instrumented cable set for the baseline and derating tests for each size conduit will be used as specified by draft 12. Different conduit specimens will be used since each Thermolag configuration has a 30-day curing period after installation.

7. Section 5.3.2.6 states that moisture content in percent moisture will be made on the Thermolag.

   Exception: The moisture content measurement will be made using a hand-held meter recommended by Thermal Science Incorporated (Thermolag manufacturer). Reference Attachment D, Page D-1. This instrumentation will not be traceable back to NIST.

   Basis: Draft 12 states that the moisture content will be reported to ensure that moisture equilibrium has been achieved.

8. Section 5.4.2 states the current value will be reported to 0.1 ampere, but no accuracy is stated.

   Exception: The accuracy for the current measurement will be +/- 1% of reading.

   Basis: Draft 12 states an accuracy of +/- 0.5% instead of an absolute current value. Per Attachment E, this value will be changed to +/- 1% in the final issue of P848.

9. Section 5.4.3 states that the rate of change will not exceed +/- .55°C/hour.

   Exception: A value of +/- .2°C/hour will be used.

   Basis: Draft 12 states the rate of change will be .2°C/hour.

10. Section 5.2.1 states that the cable will be a three conductor.

    Exception: Four conductor cables will be tested in addition to the three conductor cables.

    Basis: The three conductor test has been completed, and inconsistent results were obtained due to inductive heating caused by current imbalance. Use of four conductor cables will eliminate the current imbalance and thus the inductive heating in the conduit.

ATTACHMENT D

THERMAL SCIENCE INCORPORATED ACCEPTANCE CRITERIA FOR MOISTURE CONTENT

February 23, 1993

Tennessee Valley Authority
LP-4H-C
1101 Market Street
Chattanooga, Tennessee 37402

Attention: Mr. William M. Roop, Jr.
Principal Electrical Engineer

Dear Mr. Roop:

In accord with the information presented in the operating instructions for the Delmhorst Moisture Meter, Model-DP, the manufacturer points out that even readings in the "red zone" of the dial indicate a relatively low moisture content, such as in concrete. The manufacturer further points out that a reading of 35 to 70 on the moisture meter usually indicates a range of moisture content between 2 and 4%.

We recommend that for dry acceptance purposes, the THERMO-LAG 330 Prefabricated Panels and Preshaped Conduit Sections be accepted when the Delmhorst Moisture Meter (Model-DP) has a moisture meter reading of less than 70, on the 0 to 100 scale.

We also recommend that in all areas where THERMO-LAG 330-1 Trowel Grade Material has been applied, that the same acceptance standard be used, a moisture meter reading of less than 70 on the 0 to 100 scale of the Delmhorst Moisture Meter (Model-DP).

Yours truly,

B. E. Evans
Quality Control Manager

BEE/mls

Fax No: 615-751-8247

THERMAL SCIENCE, INC. • 2200 CASSENS DR. • ST. LOUIS, MO 63026 • (314) 349-1233
Telex: 209901 (Answerback: TSI UR) • Telecopier (314) 349-1207

ATTACHMENT E

MEMORANDUM FROM CORPORATE ENGINEERING TO DOCUMENT THE CURRENT ACCURACY REQUIREMENT

B44 930302 001

QA RECORD

March 2, 1993

R.L Morley, PSB1B-C

WATTS BAR NUCLEAR PLANT
AMPACITY DERATING TESTS FOR THERMOLAG FIRE BARRIER MATERIAL
CLSD JOB NUMBER 93-0501

The purpose of this memorandum is to confirm information given to your C.L. Rutledge by K.W. Brown on March 1, 1993. During the course of the review of revision 0 of the test plan for the subject task, it was noted that accuracy requirements in Draft 12 of IEEE P-848 contain a typographical error.

Section 5.4.2 of draft 11 of the subject standard required that the current be measured to within 0.1 amps. As was noted during the March 1 review, the 0.1 amp requirement was a carry over from an earlier draft in which only 3/c No. 6 AWG cables were utilized. Subsequently, derating tests for fire protected conduits were revised to require the use of a 4-inch conduit containing 3-1/c 750 kcmil cables but the working group failed to change the accuracy requirements to a percentage of reading. Such an approach would better reflect the wide disparity between the magnitude of current which would be required for No. 6 AWG and 750 kcmil. Consequently, section 4.5.2 of draft 12 of the standard was revised.

Our K.W. Brown is a member of IEEE/ICC Working Group 12-45 which is preparing the standard. He has checked with other members who were present at the February 22-23 meetings in Boston where draft 12 was prepared and has confirmed that the 0.5 percent limit therein was an error. The requirement should have been to measure current to a 1 percent accuracy. The Working Group has already agreed to correct this section.

Therefore, section 5.3.10 of the test plan shall require that currents during the derating tests are measured with an accuracy of 1 percent.

Should you have any questions regarding the above please contact me at 751-7501.

R.E. Miller
LP4H-C

cc: RIMS, MR 2F-C
J.A. Krieg, LP4H-C
W.R. Roop, LP4H-C
K.W. Brown, LP4H-C

TEST PLAN

WATTS BAR NUCLEAR PLANT
TESTING TO DETERMINE AMPACITY DERATING FACTORS FOR FIRE PROTECTED CABLES

JOB NUMBER 93-0501

Revision 2

March 22, 1993

C. L. Rutledge
Project Engineer

Engineering Services Section

W. E. Joly
QA Supervisor

Customer Approval

TEST PLAN

REVISION LOG

Job Number 93-0501

Revision Date	Pages Affected	Description of Change	Prepared By	Approved
Rev. 0 03/02/93	All	Initial Issue	C.L.Rutledge	
Rev. 1 03/09/93	2	Section 5.1.1 Revised description of	C.L.Rutledge	
		test specimen		
		Section 5.1.2 Removed "and couplings"		
	3	Section 5.3.5 Revised description of		
		thermocouple locations		
	4	5.3.11 Add "±"		
	A-2	Revised drawing		
Rev. 2 03/22/93	5	Added Section 5.4	C.L.Rutledge	
	A-1	Added note		
	A-2	Revised drawing		
	C-47	Added item 10		

TABLE OF CONTENTS

1.0 Scope

2.0 References

3.0 Quality Assurance

4.0 Receipt Inspection

5.0 Test Procedure

6.0 Report

7.0 Attachments

1.0 SCOPE

The scope of this test is to perform ampacity derating testing for eight configurations of cable and conduit. Four one-inch and four four-inch conduits with various cable configurations will be tested. The testing will be conducted in a temperature stable enclosure and the enclosure temperature, conductor temperature and current will be measured and recorded. This testing will be performed in accordance with P848 Draft 11. Reference Attachment C, pages C-1 through C-45 for a copy of the standards (drafts 11 and 12) and Attachment C, page C-46 and C-47 for a list of the exceptions to draft 11 of this proposed standard.

2.0 REFERENCES

2.1 CLS-QAP-1.1 "Organization"

2.2 CLS-QAP-4.1 "M & TE Calibration Program"

2.3 CLS-QAP-4.7 "Engineering Services Program"

2.4 ANSI N45.2-1971 "Test Control"

2.5 10 CFR 50 Appendix B "Quality Assurance Criteria for Nuclear Power Plants"

3.0 QUALITY ASSURANCE

3.1 Test Equipment

All test equipment and instrumentation to be used in the performance of this test program shall be calibrated in accordance with applicable standards and QA procedures and will conform to applicable portions of ANSI N45.2 and 10 CFR 50 Appendix B except the moisture meter described in Steps 5.3.3 and 5.3.14. Standards used in performing all calibrations are traceable to the National Institute of Standards and Technology (NIST), natural physical constants, or commercially accepted practices.

3.2 Personnel and Procedures

All personnel, procedures, and instructions used in the performance of this test program shall comply with the applicable requirements of the Central Laboratories Services Department (CLSD) Quality Assurance Program.

4.0 RECEIPT INSPECTION

4.1 Tagging

Each conduit configuration shall have a tag attached for identification. The tag shall bear a unique number with the following format, XX-YYYY-Z where XX- YYYY is the job number and Z denotes the individual test sample. All data associated with the conduit configuration will be identified by this number.

4.2 Inspection

The conduit and cable will be inspected to ensure they are free from any physical defects that will prevent testing from being performed.

5.0 TEST PROCEDURE

5.1 Preparation of Test Specimens

5.1.1 Four 20-foot conduit test sections each for one-inch and four-inch conduits will be prepared.

5.1.2 Weigh a minimum of one 20-foot section of each one-inch and four-inch conduit to obtain an approximate weight of the conduit.

5.1.3 Measure the circumference of one of the four-inch and one of the one-inch conduits. This will be used to calculate the thickness of the Thermolag and Thermolag with upgrade after it has been applied to the conduit.

5.1.4 Each section of conduit shall be supported 60 inches from each end and shall be thermally isolated from the conduit. This shall be accomplished by installing a mineral fiber blanket and/or blocks of wood to form a thermal break.

5.1.5 Each of the following configurations will be prepared.

1) One-inch conduit with no Thermolag (baseline)
2) One-inch conduit with 1/2-inch Thermolag
3) One-inch conduit with 1/2-inch Thermolag and 1/4 inch upgrade
4) One-inch conduit with 1/4-inch Thermolag and 1/4-inch upgrade
5) Four-inch conduit with no Thermolag (baseline)
6) Four-inch conduit with 1/2-inch Thermolag
7) Four-inch conduit with 1/2-inch Thermolag and 1/4-inch upgrade
8) Four-inch conduit with 1/4-inch Thermolag and 1/4-inch upgrade

TVA Nuclear Engineering will supply personnel to assemble these test configurations.

5.2 Preparation of the Test Facility

5.2.1 An enclosure shall be constructed so that the temperature around the specimen shall be controlled at the test temperature of 40°C ± 2°C. Some induced air movement within the enclosure is necessary to achieve uniform steady-state temperatures, but care will be taken to avoid direct air currents against the test specimens. Method of ambient temperature control within the test enclosure is important and care will be taken to avoid any additional heat loading on the cables by radiation from heat sources.

5.2.2 The temperature inside the enclosure shall be measured at no less than three places one foot from the specimen and in the horizontal plane of the test specimen. The temperature of the enclosure will be taken as the average of the steady state measurements.

5.3 Test Procedure

5.3.1 Weigh the conduit and Thermolag configurations. Record the information in the log book.

5.3.2 Measure the Thermolag circumference at 20 places along the length of each conduit and average the data. Using the baseline measurement, calculate the Thermolag thickness. Record the information in the log book.

5.3.3 Measure the moisture content of the Thermolag using a hand held moisture meter. Measurements will be taken on the top and bottom exterior of the conduit at the midsection. This measurement shall be made a minimum of two times. The first measurement shall be at least 24 hours prior to beginning the test and the second measurement shall be within four hours of beginning the testing. The moisture instrument is not traceable to NIST.

5.3.4 One three conductor #6 AWG shall be prepared for the one-inch conduits and single conductor 750 KCM copper cables shall be prepared to simulate a three conductor cable for the four-inch conduits. The same prepared cables will be used for testing each configuration of conduit and Thermolag.

5.3.5 Thermocouples with be installed in three locations as shown in Attachment A, page A-2. The outer jacket will be split or a flap cut, and the inner insulation for each of the conductors will be split or a flap cut. The thermojunction for the thermocouple (24 gage, Type T with an accuracy of ± 0.5°C) will be inserted into the strands of each of the three conductors. The slit/flap will be resealed with a single layer of spiral wrap of electrical tape. This configuration will have a total of nine thermocouples for each test specimen. The thermocouple lead wires shall be bundled in the center of the three 750 mcm conductors. The cable and thermocouples shall be tied with tape or stainless steel bands every two feet.

5.3.6 The cables with the thermocouples installed shall be pulled into place in the conduit.

5.3.7 The cables shall be connected as a single series electrical circuit, which contains all conductors in the system.

5.3.8 The cables which penetrate the end of the conduit shall be wrapped with thermal insulation. Electrically heated tape may be used to allow the end of the cable to be adjusted to keep the two outer thermocouples within 4°C of the center.

5.3.9 Seal the ends of the conduit with insulation material.

5.3.10 The circuit shall be energized with 60 Hz, single phase alternating current sufficient to reach a steady-state temperature of 90°C at the hottest single point monitored at location two. (Reference Attachment A, page A-2.) The current values measured shall be reported to the nearest 0.1 ampere, and will be accurate to ± 1% of reading.

5.3.11 The temperature measurements will be recorded on a data logger and at intervals no greater than 1 minute. The current in each test circuit shall be adjusted to achieve a hot spot conductor temperature of 90°C ± 1.1°C at location #2. The average temperatures at locations #1 and #3 shall be within ± 4°C of the average temperature readings at location #2.

5.3.12 The system will be considered to be in steady state condition when a three-hour period has elapsed since any perturbation of the system occurred (current adjustment, box temperature change, additional insulation placed on ends, etc.) and the rate of change of the average of all monitored conductor temperatures in that circuitry does not exceed ± .2°C. Readjustment of the current flow to a circuit in order to maintain a given amperage value is not to be considered a perturbation.

5.3.13 In order to statistically assure thermal equilibrium, the conductor temperature will be averaged at each sampling period and a linear regression analysis performed on the data obtained from that and all other averages taken of the preceding 60-minute period. The slope of the line will be in °C/hour. As soon as the absolute value of the slope of these data becomes less than 0.2, equilibrium has been reached. Reference Attachment B for a detailed procedure for performing this analysis. This will be performed using computerized data retrieval and analysis. (Reference Attachment A, page A-1 for test setup.)

5.3.14 Measure the moisture content of the Thermolag using a hand held moisture meter. Measurements will be taken on the top and bottom exterior of the conduit at the midsection. This measurement shall be made within four hours of completing the test. The moisture instrument is not traceable to NIST.

5.4 Four Conductor Test Procedure

NOTE: This testing is performed due to inconsistent results obtained during the three conductor cable test. All test results for the three conductor test and four conductor test will be reported in the final report.

5.4.1 Prepare one four conductor #6 AWG for the one-inch conduits and single conductor 750 KCM copper cables shall be prepared to simulate a four conductor cable for the four-inch conduits. The same prepared cables will be used for testing each configuration of conduit and Thermolag.

5.4.2 Thermocouples will be installed in three locations as shown in Attachment A, page A-2. The outer jacket will be split or a flap cut, and the inner insulation for each of the conductors will be split or a flap cut. The thermojunction for the thermocouple (24 gage, Type T with an accuracy of ± .5°C) will be inserted into the strands of each of the four conductors. The slit/flap will be resealed with a single layer of spiral wrap of electrical tape. This configuration will have a total of twelve thermocouples for each test specimen. The thermocouple lead wires shall be bundled in the center of the four 750 mcm conductors. The cable and thermocouples shall be tied with tape or stainless steel bands every two feet. REV 2

5.4.3 Repeat steps 5.3.3 and 5.3.6 through 5.3.14 for each configuration of cable and conduit.

6.0 REPORT

6.1 Final Report

The final report shall describe the test requirements, report the results of the tests, and reference procedures and test instructions required to perform this test plan. The following information specifically shall be included.

1. Description of the test configuration.
2. Date of the test.
3. Location of the test.
4. Description of the test equipment and test articles.
5. Calibration documentation of all thermocouples.
6. Qualification and certification for test personnel.
7. Test procedures used.

8. Ampacity values determined and accompanying equilibrium temperatures.

9. Description of:

   a. Test article construction

   b. Installation and inspection procedure

   c. Identification and installation of fire barrier material

   d. Thermocouple locations

   e. Cables, size, type, and location

10. Computer printout and graphic results of the ampacity test.

11. All raw data.

12. 35mm photographic coverage of the test project.

13. Provide a chronological log (Event Log) of all activities from receipt of materials through final test report.

6.2 Anomalies

All abnormal or unusual occurrences related to the performance of the test instrumentation, test fixtures, or test specimens shall be reported as an anomaly. This shall also include deficiencies in test methods, procedures, instructions and any deviation from the test plan.

A notice of anomaly report shall be initiated and forwarded to the customer once an anomaly has been identified. All anomalies shall be investigated, their impact on the test shall be established, and corrective action acceptable to the customer accomplished prior to continuation of any testing. Final customer acceptance shall be documented by the customer's approval of the notice of anomaly report.

7.0 ATTACHMENTS

7.1 Attachment A - Test Setup

7.2 Attachment B - Linear Regression Fit Method

7.3 Attachment C - Drafts 11 and 12 of IEEE P848 and Exceptions to Draft 11

7.4 Attachment D - Thermal Science Incorporated Acceptance Criteria for Moisture Content

7.5 Attachment E - Memorandum from Corporate Engineering to document the current accuracy requirement

ATTACHMENT A

TEST SETUP

TEST SET-UP FOR ONE CONDUIT AND CABLE ARRANGEMENT TYPICAL OF TWO

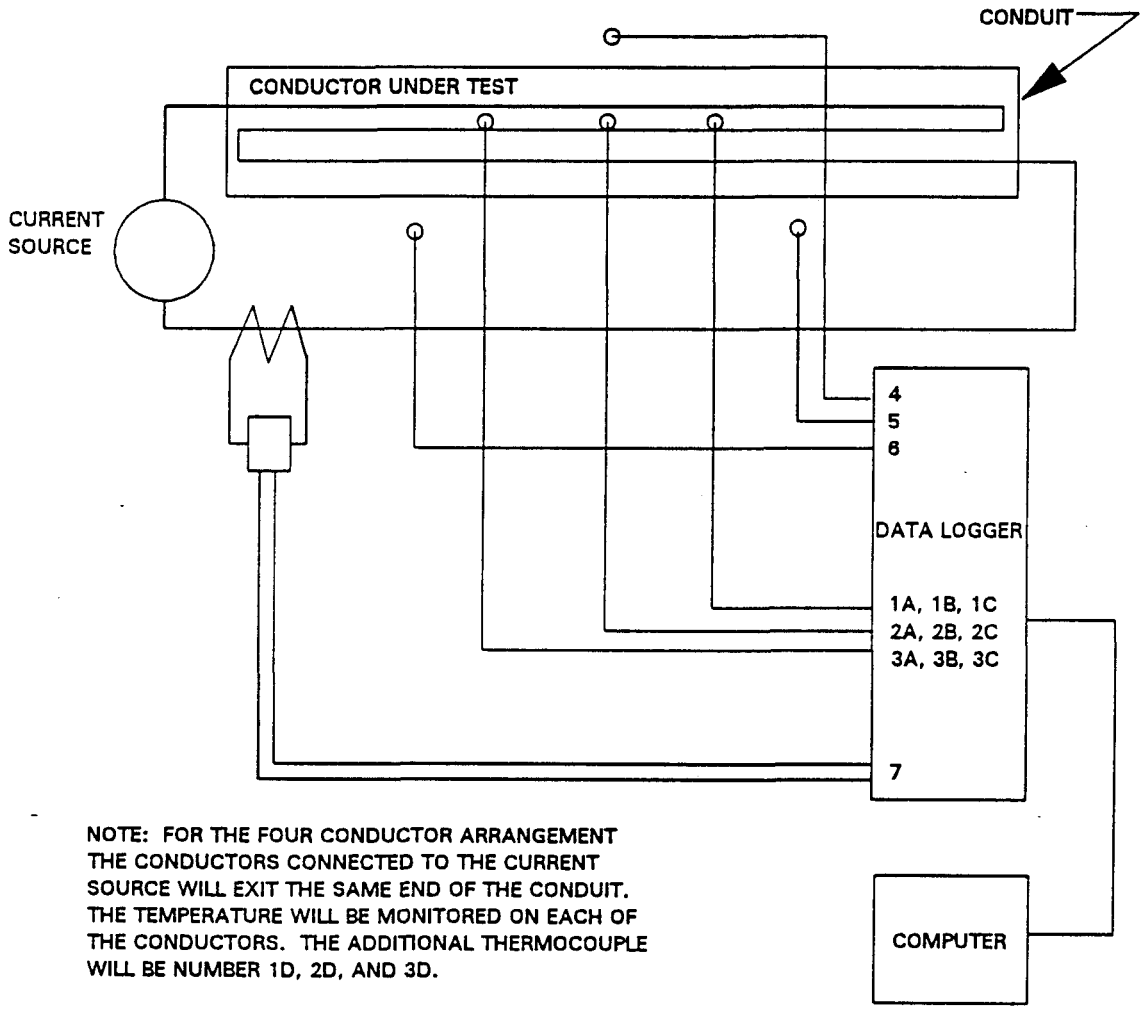

NOTE: FOR THE FOUR CONDUCTOR ARRANGEMENT THE CONDUCTORS CONNECTED TO THE CURRENT SOURCE WILL EXIT THE SAME END OF THE CONDUIT. THE TEMPERATURE WILL BE MONITORED ON EACH OF THE CONDUCTORS. THE ADDITIONAL THERMOCOUPLE WILL BE NUMBER 1D, 2D, AND 3D.

REV 2

INPUTS 1, 2, AND 3 AVERAGED AND USED TO CALCULATE LINEAR REGRESSION.
EACH CONDUCTOR WILL HAVE A THERMOCOUPLE INSTALLED IN IT. THIS WILL YIELD A TOTAL OF NINE (TWELVE ON FOUR COND.) TEMPERATURES TO BE AVERAGED.
THE SLOPE OF THE LINE MUST BE LESS THAN THE ABSOLUTE VALUE OF 0.2
INPUTS 4, 5, AND 6 AVERAGED FOR ROOM TEMPERATURE 40 DEG C +/- 2 DEG C
INPUT 7 IS THE CURRENT MEASURED IN THE CIRCUIT BY MEANS OF A CURRENT TRANSFORMER AND CURRENT TRANSDUCER.

C:\FL\CINDY\9305014.DWG

THERMOCOUPLE LOCATIONS

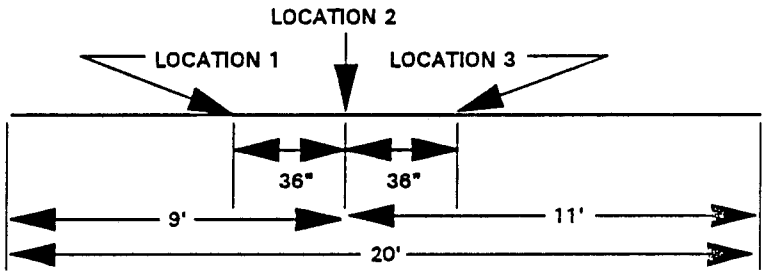

3 CONDUCTOR 4 CONDUCTOR

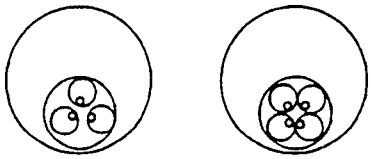

THERMOCOUPLE GOES ON THE CONDUCTORS
ONE ON EACH CONDUCTOR AT EACH LOCATION.

REV 2

ENCLOSURE WALLS A MINIMUM OF 18 INCHES FROM THE SUPPORTS
SUPPORTS LOCATED 5 FEET FROM EACH END.

A-2

C:\FL\CINDY\9305011.DWG

ATTACHMENT B

LINEAR REGRESSION METHOD

As an example the least-squares technique, consider the conduit in Attachment A, page A-1. At each sampling time, an average temperature of 9 thermocouples will be calculated. This value will then be added to the top of an array large enough the hold 60 minutes worth of these averages, and the oldest value discarded. A linear regression fit is then performed on the array. When the next data sampling is completed, the entire process is repeated, thus yielding a linear regression fit of the data from the previous 60 minutes. As each new data point is added to the array, all previous ones are shifted down on time increment until each is finally discarded due to the fixed size of the array.

$$Y = mX + b \qquad \overline{X} = \sum X/n \qquad \overline{Y} = \sum Y/n$$

$$m = \frac{\sum XY - \dfrac{\sum X \sum Y}{n}}{\sum X^2 - \dfrac{(\sum X)^2}{n}}$$

$$b = \overline{Y} - m\overline{X}$$

WHERE:

X=AVERAGE CONDUCTOR TEMPERATURE (DEG C)

Y=TIME INCREMENT (MIN)

M=SLOPE OF LINE(DEG C/MIN)

B=Y-AXIS INTERCEPT 9DEG C)

C:\FL\CINDY\9305016.DWG

ATTACHMENT C

DRAFTS 11 AND 12 OF IEEE P848 AND EXCEPTIONS TO DRAFT 11

ATTACHMENT 2

April 6, 1992

P848/D11

PROCEDURE FOR THE DETERMINATION OF THE AMPACITY DERATING OF FIRE PROTECTED CABLES

Prepared by Task Group 12-45
of the Test and Measurements Subcommittee #12
of the IEEE Insulated Conductors Committee

All rights reserved by the Institute of Electrical and Electronics Engineers, Inc.

At the time this draft was completed, the Task Group on Procedure for the Determination of the Ampacity Derating of Fire Protected Cables had the following membership.

A.K. Gwal, Chairman

T. J. Al-Hussaini
P. Bhatia
E. A. Capouch
E. J. Coffey
E. J. D'Aquanno
R. Das
J. Daly
P. J. Finnerty
J. B. Gardner
P. A. Giaccaglia
A. Hiranandani
C.V. Johnson
A.E. Kollar
R. G. Koza
R. Licht
J. E. Merando, Jr.
K. W. Prier
D. N. Priest
B. E. Reagan
G. A. Remaley
P. D. Skelly
M. Spurlock
W. Torok
J. R. Tuzinski
F. W. Van Nest
T. A. Venkataraman
J. G. Waligorski

Other individuals who have contributed are:

K. W. Brown
D. C. Gasda

PROCEDURE

for the Determination

of the

AMPACITY DERATING OF FIRE PROTECTED CABLES

DRAFT 11

April 1992

INTRODUCTION

Many installations incorporate individual or grouped cables which do not limit the flame propagation under fire conditions. This deficiency can be attributed to conventional cable constructions, such as polyethylene insulated PVC jacketed control cables; which were popular in the sixties and early seventies. Such cables do not meet the flame spread criteria when subjected to the vertical tray flame test which has been accepted in one form or another. Other installations which fall in the same category include metal sheathed or armored vertical shaft cables with overall polyethylene jacket and secured with clamps at various intervals. Polyethylene jacket is used because of its high resistance to creep under pressure in the clamp area to support the sheer weight of the cable.

The foregoing installations include industrial, commercial, marine, nuclear or fossil generating stations and others.

To retard the flame propagation properties of cables in cable trays, protective coatings are applied either along the entire length of the cable(s) or in certain sections as deemed necessary. The flame retardant coatings may be in a form of tapes, blankets, liquids or mastics applied to individual or to grouped cables, both for retrofitting existing installations or for new installations.

1. PURPOSE

The purpose of the standard is to provide a test procedure which may be used to determine the ampacity derating required for fire protected cables in conduit, in penetrations (fire stop) and in cable tray systems.

2. SCOPE

This standard provides a detailed procedure for determining the ampacity derating required for fire protected cable systems. The tests are intended to be used to determine the ampacity derating of fire protected systems which is to be applied to the ampacity of cables determined by standard methods such as ICEA P-46-426 Power Cable Ampacity Volumes 1 & 2, and ICEA P-54-440 Cables in Open-top Cable Trays.

2.1 General

The procedure presented in this standard includes the principles and methods of testing. This test procedure will provide the ampacity derating of a fire protected cable system.

2.2 Applicability

Fire protected cable systems outlined herein are intended for use in power generating stations, both nuclear and fossil, as well as other applicable commercial and industrial installations, both outdoors and indoor. The categories of cables include, but are not limited to: power, control, and instrumentation including signal and communication cables. Testing of flame retardant coatings on horizontal cables will qualify the coatings for all orientations. The tests as described herein are intended to be used in determining the derating factor, which may be required for fire protected cables in conduits and trays. The ampacity of the cable in raceway will typically have first been determined using accepted practices such as ICEA P-46-426 Power Cable Ampacities Volumes I and II, and ICEA P-54-440 Cables in Open-Top Cable Trays.

The user of flame retardant coatings is cautioned to determine that the coating is compatible with the cable materials with which it comes in contact and with the environment in which it is installed. The user may specify tests in addition to those specified in this standard to reflect the installation conditions, e.g., for nuclear stations, the user may wish to add irradiation test or effects of added weight; or for outdoor installations, the user may wish to add a U.V. resistance test.

3. DEFINITIONS

These definitions establish the meanings of words in the context of their use in this standard.

Fire Protected Cable Systems

Cable systems to which an application of a flame retardant barrier, fire resistive barrier or coating (flame retardant coating) to protect cables from fires from any cause has been applied.

Flame Retardant Coatings

A material applied to a completed cable or assembly of cables to prevent the propagation of flame when exposed to a flame source. Flame retardant coatings include tapes, blankets, liquids, flame retardant mechanical system or mastics.

Passive Fire Protection Systems

Systems which embody fire resistant construction such as coatings, barriers, walls, and penetrations (fire stops) as opposed to water sprinkler systems or gaseous extinguishing systems.

Through-Penetration Fire-stop

A specific construction of devices, fill materials, or both, designed to resist the penetration of fire through those openings in fire resistive floors or walls that are intended to accommodate electric cables, raceways and mechanical service penetrations.

Ampacity Derating Factor

A factor applicable to the ampacity rating of a cable (or other device) to account for the adverse affects of some installation or environmental condition.

Raceway

Any channel that is designed and used expressly for supporting or enclosing wires, cables, or bus bars. Raceways consist primarily of, but are not restricted to, cable trays and conduits.

Cable Tray

A continuous rigid structure used to support cables. Cable trays include ladders, troughs, channels and other similar structures. Conduits are not included in this category.

Enclosures

A surrounding case or housing used to protect the contained equipment and prevent personnel from accidentally contacting live parts.

4. REFERENCES

The following standards were used as references in preparing this standard and may be useful in the interpretation of its meaning:

ICEA P-46-426/IEEE S-135
Power Cable Ampacities, Vols. 1 and 2. Dated 1962 (Reprinted in 1984).

ICEA P-54-440/NEMA WC-51
Ampacities - Cable in Open Top Cable Trays. Dated 1986.

5. TEST DESCRIPTION

5.1 General

This section describes the method for determining ampacities of cable passing through single tray and conduit with and without a passive fire protection system.

5.1.1 Applicability

This method shall be applicable to a single cable or groups of cables enclosed in a passive fire protection system. Cables may be contained in a raceway or as dictated by the actual installation.

5.1.2 Method of Testing

Ampacity derating for cables of a passive fire protective system shall be by testing. Testing shall be performed using the configurations depicted in Figures 1 and 2. As an alternative, tests may be performed using representative assembly which can be analyzed to show its applicability to actual installed conditions. Results are also applicable for 1000 volts and higher rated cables.

5.2 Test Specimens

5.2.1 Cable Selection

The cable to be utilized is chosen as one which is representative of a wide range of cables. The selection of a 3 conductor cross link polyethylene insulated, #6 AWG 600 volts copper cable with an overall chlorosulfonated polyethylene (i.e. hypalon) jacket was chosen as representative.

5.2.2 Cable Fill

Cable fill is the ratio of cable area to the inside area of the tray expressed in percentage. A 40 percent cable fill, as determined from actual measurement shall be used for cable trays.

5.2.3 Cable Layout

The length of both the conduit and the tray shall be twelve feet. One to two feet of cable shall extend out each end and shall be wrapped with unfaced fiberglass blanket insulation (or electrically-heated tape) as necessary to eliminate heat flow out of raceway ends.

5.2.4 Conduit

The conduit system shall be 4 inch and 1 inch steel rigid conduit, 12 feet long supported every 18 inches from each end by a horizontal piece of "H"-shaped or 2" x 2" square structural tubing.

5.2.5 Tray

The tray shall be a 4 inch deep, 24 inch wide ladder-back steel cable tray 12 feet and support similarly to the conduit system. The tray and conduit systems, if tested together, must be at least 36 inches apart along their lengths.

5.2.6 Through-Penetration Fire-stops

A through-penetration fire-stop intended for installation in a fire resistive floor assembly, wall assembly, or both, is to be installed in a wall section so that the electrical cables pass horizontally through the wall. The through-penetration fire-stop is to be installed in

accordance with all requirements specified for the fire-stop being tested.

The sample wall section is to be representative of that specified for the through-penetration fire-stop. The thickness of the wall section is to be equal to the maximum thickness of the fir-estop system or device. The size of the through opening in the wall section is to be representative of the through opening size specified for the through-penetration fire-stop.

The fire protective system is to be installed around the electrical cable(s) and raceway(s) in accordance with all requirements specified for the system.

5.3 Test Facility

5.3.1 Test Room

The ampacity test shall be conducted in an enclosure as defined in Figure 3. The test specimen shall be suitably enclosed such that temperature around the specimen shall be controlled at the test temperature of 40°C±2°C. The enclosure surrounding the test specimen shall be of even temperature, but must not cause drafts on the test specimen. The temperature inside the enclosure shall be measured at no less than three places one foot from the specimen, and in the horizontal plane of the test specimen. The temperature of the enclosure shall be taken as the average of the steady state measurements.

5.3.2 Cable Installation

5.3.2.1 Tray

The tray is to be loaded with three conductor #6 AWG, 3/c copper cable, with an overall chlorosulfonated polyethylene jacket. The tray fill should be based on 40 percent fill.

Tray cables should be installed in an orderly, symmetric manner, so as to limit the flow of air through the bundle, and to facilitate inter and intra-laboratory repeatability of these tests. The cables shall be connected as a single series electrical circuit, which contains all conductors in the system. The tray is to be supported by two horizontal pieces of "H"-shaped or a suitable support system, located as shown in Figure 3. A 3" x 25" piece

of 1" thick mineral fiber blanket shall be placed between the tray and support system to form a thermal break. Thermal insulation (e.g., fiberglass or electrically-heated tape) shall be wrapped around the cable which extends out of both ends of the tray to allow adjustment of end temperatures. The end temperatures must be adjusted such that the average values for the thermocouples at locations 1 and 3 are within 4°C of the average for location 2 to minimize axial heat flow.

5.3.2.2 Conduit

Since the application of the fire protection system may result in differing derating for different conduit sizes, two sizes of conduits shall be tested:

(a) 1 inch rigid steel conduit with one 3/c No 6 AWG copper cable

(b) 4 inch rigid steel conduit with one 3/c, 750 Kcmil copper cable

Derating for both sizes shall be reported. Lowest factor shall be used for ampacity derating. The bundle shall be instrumented with thermocouples as shown in Figure 2, tied with wraps every 2 feet, and pulled into position in the conduit. The cables shall be connected as a single series electrical circuit, which contains all conductors in the system. The conduit is to be supported by two horizontal pieces of "H" shaped or 2" x 2" structural square tubing with a minimum of 36 inches clearance from the tray or walls of the enclosure. The attachment points between the conduit and the supporting beam are to be insulated with 1" thick mineral fiber blanket to form a thermal break similar to the tray system. Insulation (or electrically-heated tape) shall be wrapped around the cable which extends out of both ends of the conduit to allow adjustment of end temperatures. The end temperatures must be adjusted such that the average values for the thermocouples at locations 1 and 3 are within 4°C of the average for location 2, to minimize axial heat flow. In other words, the ends should be close to the same temperatures as the middle, thereby minimizing axial heat flow.

5.3.2.3 Through-Penetration Fire-stops

The electrical cable(s) and raceway(s) penetrating the sample wall section are to be representative of those specified for the through-penetration fire-stop and are to be of sufficient length to project a minimum of 24 inches beyond both sides of the wall section. For this purpose maximum thickness of fire-stop shall be measured. Thermocouples on the electrical cables in through-penetration fire-stops are to be located so that temperatures are measured in the interior of the fire-stop and at the fire-stop mid-depth as in figure 5.

5.3.2.4 Orientation

The test specimens shall be mounted and the tests run in the horizontal direction so as to eliminate any possibility of a "chimney-effect" which could cause air movement within the system.

5.3.2.5 Thermocouple Placement

Thermocouples (24 gage, Type K [Special Grade] Chromel-Alumel, accuracy ±1.15°C) shall be installed by slitting the cable insulation and jacket and placing the thermojunction in intimate physical contact with the conductor strands, as illustrated in Figure 4. The cable shall then be restored as closely as possible to its original condition, and the slit sealed with a single-layer spiral wrap of electrical tape. Since the test is evaluating the temperature at the hottest position, rather than the average of all thermocouples, the cables within the bundle have been instrumented, instead of those near the outside. For both the conduit and tray systems, thermocouples shall be placed at each of three vertical planes along their lengths, as illustrated in Figures 1 and 2. The tray system shall be instrumented with 13 thermocouples at each plane, for a total of 39 thermocouples, and the conduit system shall be monitored with 1 thermocouple at each plane, for a total of 3 thermocouples.

5.3.2.6 Installation of Passive Fire Protection Systems

The tray and/or conduit is to be lifted off it's support after the completion of the baseline test, the passive fire protective system applied in accordance with the manufacturer's instructions, and the entire assembly lowered onto the horizontal

support, thereby minimizing any heat sink effect from the support system. After installation, the passive fire protection system shall be allowed to equilibrate (or cure) to a state of constant moisture content, if applicable. Moisture content (in terms of percent moisture) shall be taken 4 hours or less before the test is begun and within 4 hours after completion of the test, using either a hand-held moisture meter, or standard 120°C oven-dry methods). Such moisture determination is to be made on the top and bottom exterior surfaces of both the tray and conduit systems at their mid-length, and the results of top and bottom averaged.

5.4 Test Procedure

5.4.1 Baseline Evaluation

At least one baseline experiment for each system (conduit and tray) using Sections 5.4.2, 5.4.4, and 5.4.5 shall be conducted to establish the cable ampacity prior to application of the fire protective system. The ampacity value measured should be compared to the IEEE-ICEA Power Cable ampacities standards.

5.4.2 Current

The circuit shall be energized with 60 Hz, single phase alternating current sufficient to reach a steady-state temperature of 90°C at the hottest single point monitored at location 2 (see Figures 1 & 2). The current values measured shall be reported to the nearest 0.1 ampere. The use of a constant-current amplifier is highly recommended as a power source, since the increasing temperatures of the conductor circuit cause resistance changes. Alternatively large variable transformers may be used, with constant readjustment to maintain a set current flow.

5.4.3 Temperature Measurement

All temperatures shall be recorded at intervals no greater than 1 minute. The current in each test circuit shall be adjusted so as to give an equilibrium temperature of 90°C±1.1°C at the hottest point monitored within location #2 (those located at the center of the system). The average temperatures of thermocouple locations #1 and #3 shall be within ±4°C of the average of thermocouple location #2. Each cable circuit shall be

This page number was inadvertently omitted. It was discovered during the final review of the report.

considered to be in steady state condition when a three-hour period has elapsed since any perturbation of the system occurred (current adjustment, box temperature change, additional insulation placed on ends, etc.) and the rate of change of the average of all monitored conductor temperatures in that circuit does not exceed ±0.55°C for the conduit[1] and ±0.35°C for tray[1]. Re-adjustment of the current flow to a circuit in order to maintain a given amperage value is not to be considered a perturbation.

In order to statistically assure thermal equilibrium, the conductor temperatures should be averaged at each sampling period and a linear regression analysis (least-squares fit) performed on the data obtained from that and all other averages taken over the preceding 60 minute period. The slope of the line obtained will be in units of °C/hour. As soon as the absolute value of the slope of these data becomes less than 0.55 (conduit) or 0.35 (tray), equilibrium has been reached. The degrees of freedom obtained by averaging many thermocouple locations (3 for conduit, 39 for tray), allows the precision to exceed the ±1.1°C limit of any one thermocouple. The only practical method of obtaining the required accuracy in determining thermal equilibrium is through the use of computerized data retrieval.

As an example of the least-squares technique, consider the tray system in Figure 1. At each sampling time, an average temperature of thermocouples 1 through 39 will be calculated. This value will then be added to the top of an array large enough to hold 60 minutes worth of these averages, and the oldest value discarded. A linear regression fit is then performed on the array and presented on the video screen to the operator. When the next data sampling is completed, the entire process is repeated, thus yield a linear regression fit of the data from the previous 60 minutes. As each new data point is added to array, all previous ones are shifted down one time increment, until each is finally discarded due to the fixed size of the array.

[1] Chosen as the 95% confidence limits for Special Grade, Type K thermocouples at 90°C.

LINEAR REGRESSION (LEAST SQUARES METHOD) FIT:

$$Y = mX + b \qquad \overline{X} = \Sigma X/n$$

$$\overline{Y} = \Sigma Y/n$$

$$m = \frac{\Sigma XY - \frac{\Sigma X \Sigma Y}{n}}{\Sigma X^2 - \frac{(\Sigma X)^2}{n}}$$

$$b = \overline{Y} - m\overline{X}$$

Where:

Y = Average Conductor Temperature (°C)
X = Time Increment (min)
m = Slope of line (C/min)
b = Y-Axis intercept (°C)

5.4.4 Enclosure Temperature

The temperature within the test enclosure shall be controlled to 40°C ±2°C. Some induced air movement within the enclosure is necessary to achieve uniform steady-state temperatures, but care must be taken to avoid direct air currents against the test specimens. Method of ambient temperature control within the test enclosure is important and care must be taken to avoid any additional heat loading on the cables by radiation from heat source.

6. EVALUATION OF TESTS

By a simple comparison of the baseline and test specimen ampacities, a derating factor can be calculated.

Data Interpretation: Ampacity Derating Factor

The maximum current carrying capacity shall be determined by derating applied as dictated by the test. The derating factor as determined by the test is to be calculated as follows:

% Ampacity Derating Factor = $(I_0 - I_f)/ I_0 \times 100$

Where:

I_0 = Current in amperes required to attain a temperature of 90 °C for the baseline (un-protected) system. However, if I_0 is larger than published ampacity i.e. ICEA P-46-426, P-54-440 then published ampacity shall be used for I_0.

I_f = Current in amperes required to attain a temperature of 90 °C for the system as protected by the passive fire protection system.

7. DOCUMENTATION OF TESTING

Following the procedure outlined in this standard, provide percentage ampacity derating and record the following specific data.

- Description of cables and raceway, if different from specified herein.
- All thermocouple data
- All current and voltage values
- Current and conductor temperature values observed at equilibrium
- Weight of passive fire protection system (lb/ft)
- Average thickness of fire protective system (inches)
- Details of installation of fire protective system

The documentation of records shall be provided in the form of a FINAL REPORT. The report shall contain for permanent record all information pertaining to the test including the Test Plan, laboratory notebook, all raw data, interpretations, and observations. The report shall provide the documentation of all the above parameters and evidence of calibration to NIST standards for equipment used in obtaining this data (including before and after calibration of thermocouples), and appropriate resolution of any test anomalies. All calculations, conclusions or interpretations shall have been checked and approved by authorized individuals certified by the testing organization to be knowledgeable of the techniques used.

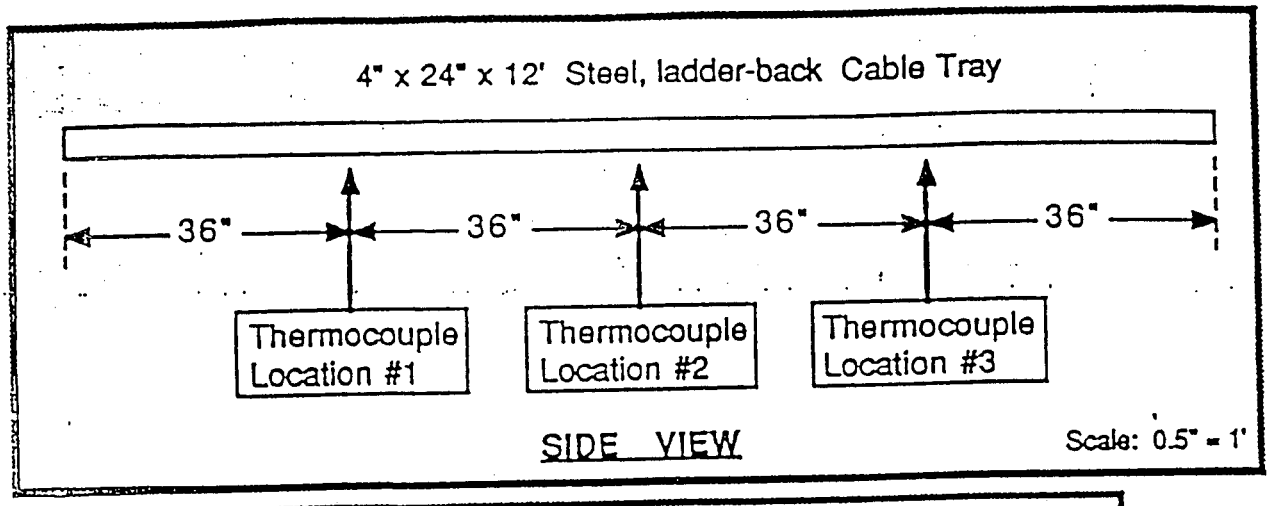

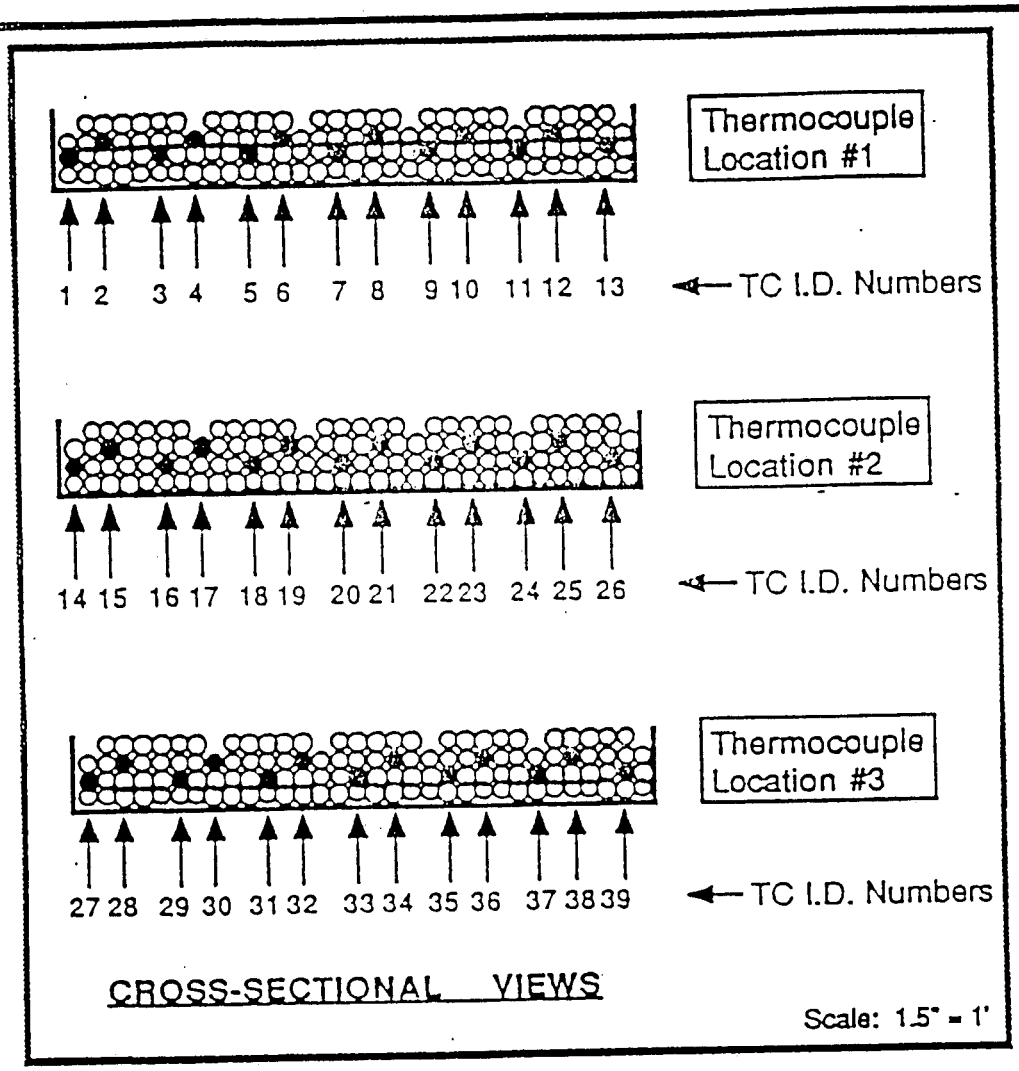

NOTE: Cable tray is to be 100% visual-fill with 3 Conductor #6 AWG Cable.
Number of cables = 122. Cable diameter = 0.75 inch.

TRAY AMPACITY DESIGN

Figure 1

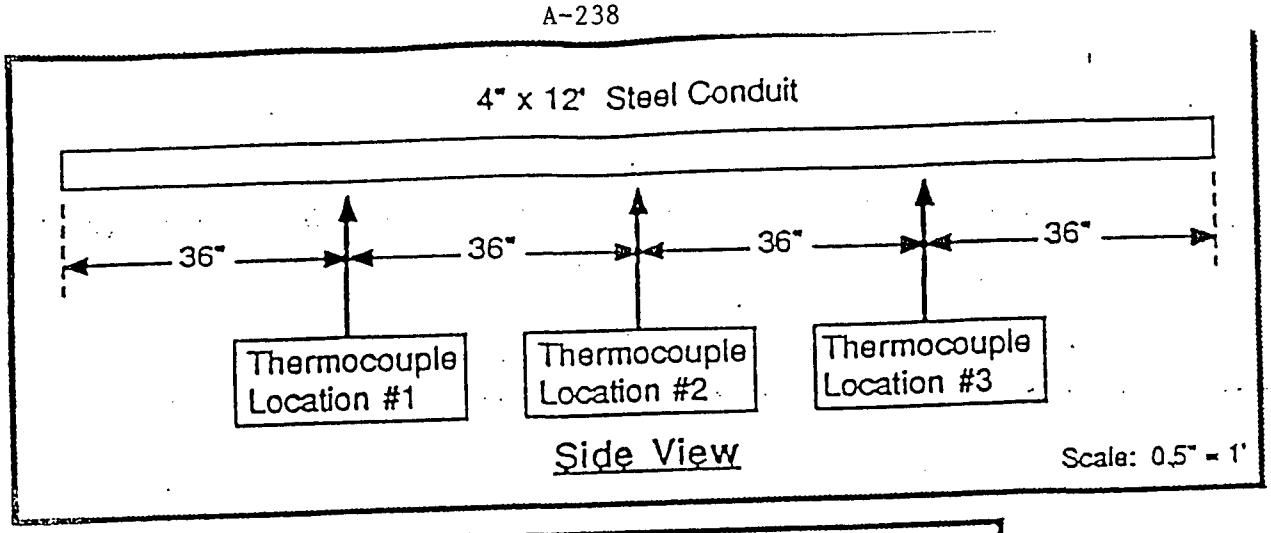

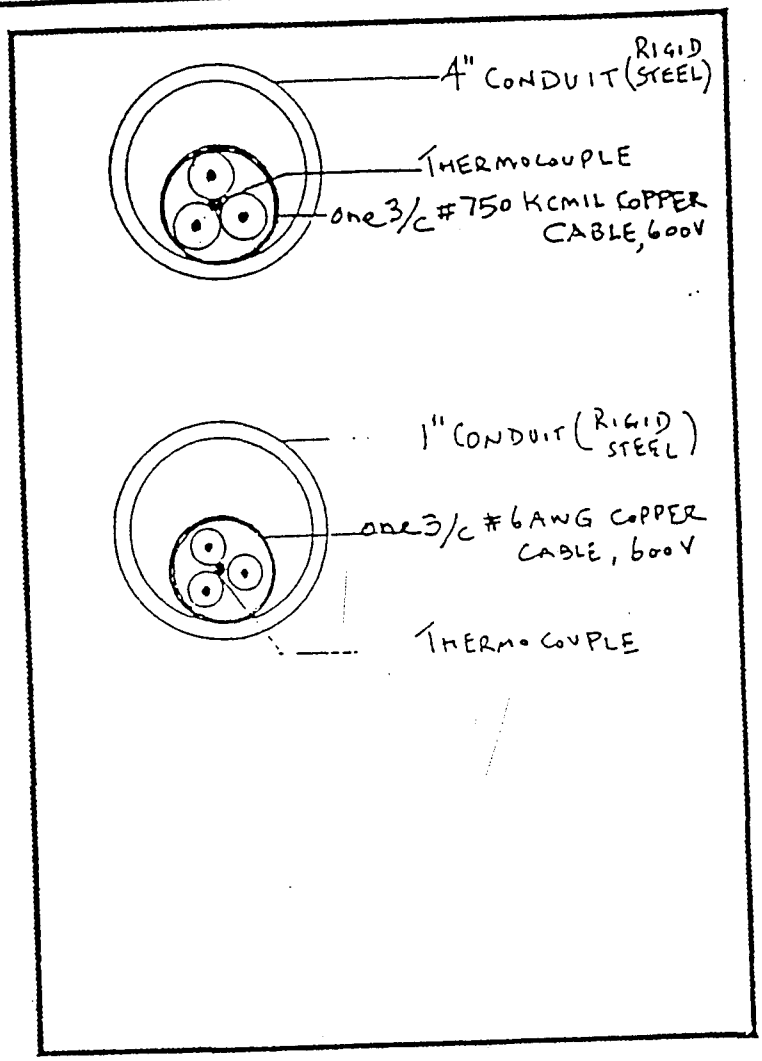

CONDUIT AMPACITY DESIGN

Figure 2

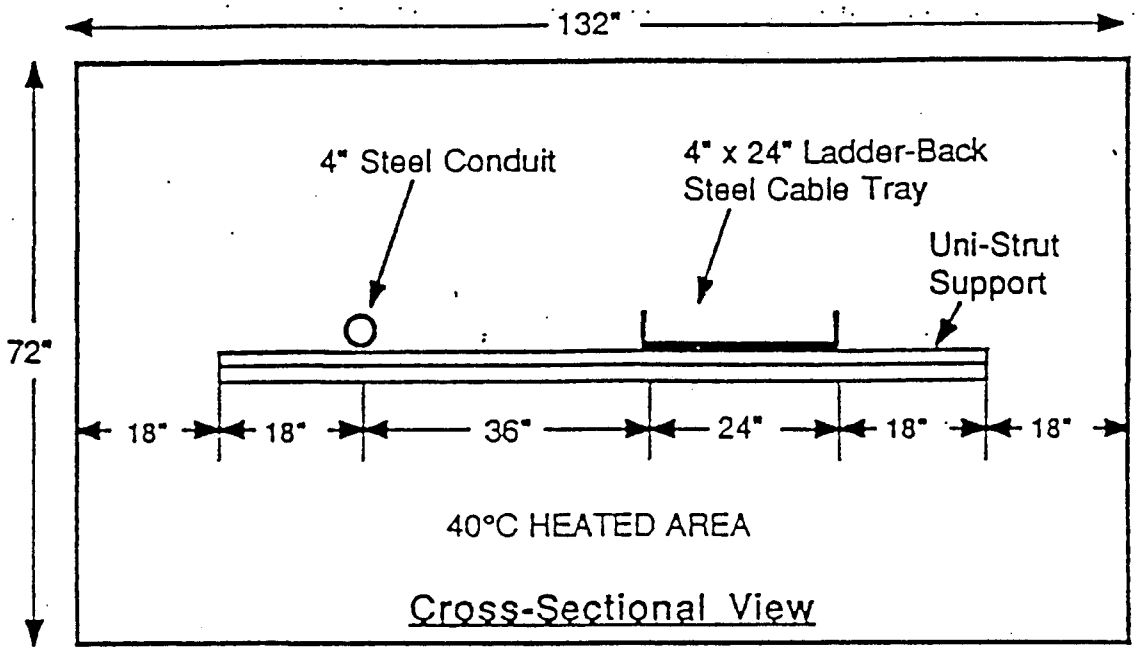

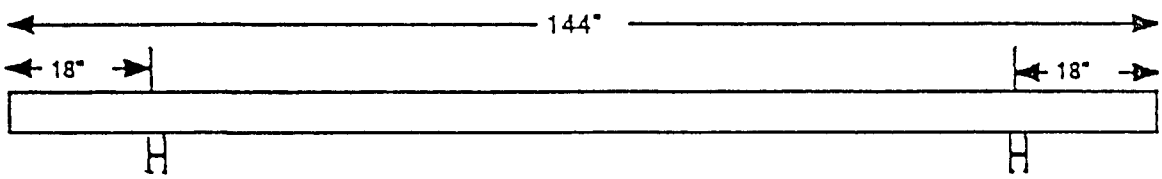

Conduit & Tray Support Points

CONDUIT AND TRAY AMPACITY DESIGN

Figure 3

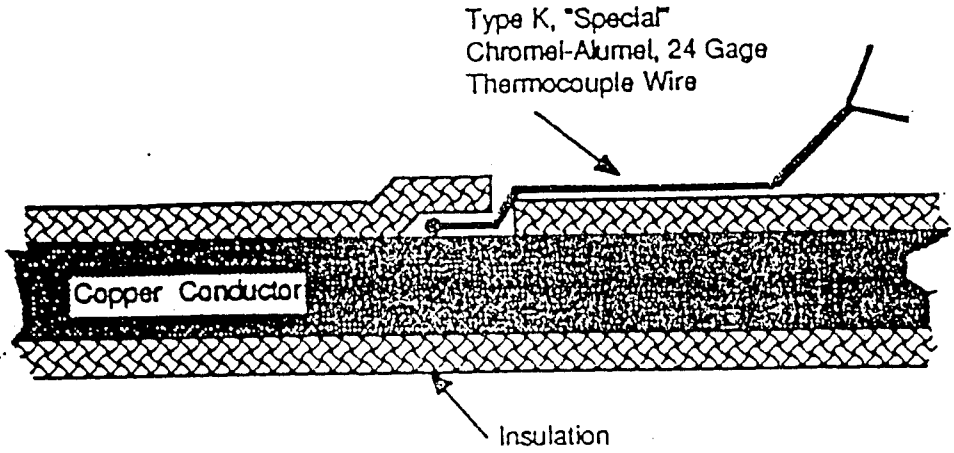

NOTE:

To attach thermo-junction to copper conductor, make an approximately 2 inch long slit in the outer wrap, expose the three conductors, locate the conductor to be instrumented, make a 1 inch slit in the insulation and insert the thermocouple junction in contact with the strands. Close the slit, reposition the wouter wrap and seal with a spiral wind of a single layer of glass-reinforced electrical tape.

Figure 4

P 848/D12 February 24, 1993

IEEE STANDARD

PROCEDURE FOR THE DETERMINATION OF THE

AMPACITY DERATING OF FIRE PROTECTED CABLES

Sponsor

Insulated Conductors Committee of the

IEEE Power Engineering Society

Prepared by Task Force 12-45 of
Test and Measurements Subcommittee No. 12 of
Insulated Conductors Committee

Copyright 1993 by the Institute of Electrical and Electronics
Engineers, Inc.
345 East 47th Street
New York, NY 10017, USA
All rights reserved.

This is an unapproved draft of the proposed IEEE Standard, subject to change. Permission is hereby granted for IEEE Standards Committee participants to reproduce this document for purposes of IEEE standardization activities. Permission is also granted for member bodies and technical committees of ISO and IEC to reproduce this document for purposes of developing a national position. Other entities seeking permission to reproduce this document for standardization or other activities, or to reproduce portions of this document for these or other uses, must contact the IEEE Standards Department for the appropriate license. Use of information contained in this unapproved draft is at your own risk.

IEEE Standards Department
Copyright and Permissions
445 Hoes Lane, P.O. Box 1331
Piscataway, NJ 08855-1331, USA

Foreword

(This Foreword is not a part of IEEE Std. P 848/D12, IEEE Standard - Procedure for the Determination of the Ampacity Derating of Fire Protected Cables)

Many cable installations in nuclear and fossil fuel generating stations require the installation of fire stop, fire protective materials, coating, and electrical separation wrap materials over the cables or the raceway for fire protection or electrical separation purposes. 10CFR50 Appendix R for nuclear plants may require some electrical circuits enclosed in a fire protective material. IEEE 634-1976 specifies requirements for cable penetration fire stops at fire rated walls and floors. Compliance with IEEE 384-1992 may require installation of a wrap material over free air-drop cables or solid covers on cable trays.

Building codes for commercial and industrial facilities in some states require power cables, used in emergency power systems, to remain functional during a fire exposure. This may also necessitate the use of the fire protective material.

As discussed in IEEE 422 and IEEE 690, utility generating stations use cable ampacities provided in ICEA P-46-426 for conduits, spaced cable tray installations and duct bank installations. ICEA P-54-440 is used for cable installation in random filled open-top trays. Commercial, industrial and non-utility owned generating stations utilize cable ampacities published in NFPA-70 (National Electric Code). The National Electric Code permits the use of ICEA P-46-426 and ICEA P-54-440 under the direction of engineers

Fire-protection related products may reduce the heat transfer characteristics associated with the ampacities provided in ICEA P-46-426 and ICEA P-54-440. In future revisions, these ampacity standards may incorporate these new installation conditions on cable ampacity. Not all products, however, may be covered by changes in the ampacity standards due to their limited use to the generating station market. Hence, ampacity testing to determine ampacity derating of fire protected cable systems is necessary.

Several analytical cable ampacity methods are listed in the bibliography to address fire stops, tray enclosure materials, and cable wrap material. The user may consider the applications of these analytical methods to avoid testing of minor differences in the installation of a given product.

Copyright © 1993 IEEE. All rights reserved
This is an unapproved IEEE Standards Draft, subject to change

This standard was prepared by the Task Group on Procedure for the Determination of the Ampacity Derating of Fire Protected Cables, Subcommittee on Tests and Measurements, Insulated Conductors Committee. The membership of the working group during the preparation of this draft was:

A.K. Gwal, Chair
J.L.White, Vice Chair

T.J. Al-Hussaini
P.Bhatia
K.Brown
E.A.Capouch
E.J.Coffey
E.J.D'Aquanno
J.Daly
P.A.Giaccaglia
A.Hiranandani
A.E.Kollar
R.Licht
J.E.Merando
K.A.Petty
K.W.Prier
D.N.Priest
P.D.Skelly
M.Spurlock
W.Torok
F.W.Van Nest
J.G. Waligorski

Copyright © 1993 IEEE. All rights reserved
This is an unapproved IEEE Standards Draft, subject to change

TABLE OF CONTENTS

Section		Page
1	Overview	7
	1.1 Purpose	7
	1.2 Scope	7
2	References	8
3	Definitions	9
4	Test Description	9
	4.1 General	9
	4.1.1 Applicability	9
	4.1.2 Method of Testing	10
	4.2 Test Specimens - Protected Cable Systems	10
	4.2.1 Cable Selection	10
	4.2.2 Cable Fill	10
	4.2.3 Conduit	10
	4.2.4 Tray	11
	4.2.5 Free-Air Drop	11
	4.2.6 Fire Protective Material	11
	4.3 Test Specimens - Cable Penetration Fire Stop	11
	4.3.1 Cable Selection	11
	4.3.2 Cable Fill	12
	4.3.3 Conduit	12
	4.3.4 Tray	12
	4.3.5 Floor/Wall Assembly	12
	4.3.6 Fire Stop Design	12
	4.4 Test Facility	13
	4.4.1 Test Enclosure	13
	4.4.2 Test Specimen Installation	13
	4.4.2.1 Tray	13
	4.4.2.2 Conduit	13
	4.4.2.3 Free-Air Drop	13
	4.4.2.4 Cable Penetration Fire Stops	14
	4.4.2.5 Orientation	14
	4.4.2.6 Installation of Fire Protective Systems	14
	4.4.3 Thermocouple Selection and Placement	14
	4.5 Test Procedure	15
	4.5.1 Baseline Evaluation	15

Copyright © 1993 IEEE. All rights reserved
This is an unapproved IEEE Standards Draft, subject to change

4.5.2 Current Source 15
4.5.3 Temperature Measurement 15
4.5.4 Enclosure Temperature 17

5 Evaluation of Test Results 23

5.1 Normalizing Test Results 23

5.2 Ampacity Derating Factor 23

6 Documentation of Testing 24

7 Bibliography 25

Copyright © 1993 IEEE. All rights reserved
This is an unapproved IEEE Standards Draft, subject to change

TABLE OF CONTENTS (cont)

Section | Page

FIGURES

FIG 4-1 Tray Configuration - Protective Cable System 18
FIG 4-2 Conduit and Free-Air Drop Configurations - Protective Cable System 19
FIG 4-3 Configuration- Cable Penetration Fire Stop 20
FIG 4-4 Enclosure and Support Requirements 21
FIG 4-5 Thermocouple Attachment to Conductor 22

Copyright © 1993 IEEE. All rights reserved
This is an unapproved IEEE Standards Draft, subject to change

1 Overview

1.1 Purpose. The purpose of this standard is to provide a test procedure for use in establishing the ampacity or ampacity derating factor for cables installed in fire protected conduits, trays, or free air-drops, cable penetration fire stops, or electrical separation wrap systems.

1.2 Scope. This standard provides a detailed test procedure for determining the ampacity or derating factor in the following cable installation configurations:

(1) Block-out or sleeve type cable penetration fire stops.

(2) Conduits covered with a protective material.

(3) Tray covered with a protective material.

(4) Tray directly covered or coated with a fire-retardant material.

(5) Free-air drops enclosed with a protective material.

The standard is applicable to cables installed and sized to ICEA P-46-426 for conduits and free air drops, and ICEA P-54-440 for cable tray. ICEA P-46-426 does provide ampacities for cables in a tray with a fixed spacing and may be used for cable penetration fire stop configurations only.

This standard does not endorse the use of or provide application guidance for the installation of cable penetration fire stops and fire protective materials. Cable designs are available which can withstand and remain functional during direct exposure to a fire. The user should refer to IEEE 634 for the qualification requirements of cable penetration fire stops.

Copyright © 1993 IEEE. All rights reserved
This is an unapproved IEEE Standards Draft, subject to change

2 References

ANSI-IEEE Std 100-1990, Standard Dictionary of Electrical and Electronics Terms 4th Edition.

Cross-Linked Thermosetting Polyethylene-Insulated Wire and Cable for the Transmission and Distribution of Electrical Energy. Washington, D.C.: National Electrical Manufacturers Association, 1990. ICEA S-66-524 (NEMA WC 7-1988).

Ethylene Propylene Rubber-Insulated Wire and Cable for the Transmission and Distribution of Electrical Energy. Washington, D.C.: National Electrical Manufacturers Association, 1989. ICEA S-68-516 (NEMA WC 8-1988).

ICEA Standard for Power Cable Ampacities. Washington, D.C.: National Electrical Manufacturers Association, 1962. Reprinted by IEEE under S-135. ICEA P-46-426.

ICEA Standard for Ampacities - Cables in Open-Top Cable Trays. Washington, D.C.: National Electrical Manufacturers Association, 1991; NEMA WC-51. ICEA P-54-440.

IEEE Std. 384-1992, IEEE Standard Criteria for Independence of Class 1E Equipment and Circuits.

IEEE Std. 422-1986, IEEE Guide for the Design and Installation of Cable Systems in Power Generating Stations.

IEEE Std. 690-1984, IEEE Standard for the Design and Installation of Cable Systems for Class IE Circuits in Nuclear Power Generating Stations.

IEEE Std. 634-1978, IEEE Standard Cable Penetration Fire Stop Qualification Test.

Rubber-Insulated Wire and Cable for the Transmission and Distribution of Electrical Energy. Washington, D.C.: National Electrical Manufacturers Association, 1980. ICEA S-19-81 (NEMA WC 3-1980).

The National Electric Code, National Fire Protection Association, NFPA 70-1990, Quincy, MA.

Copyright © 1993 IEEE. All rights reserved
This is an unapproved IEEE Standards Draft, subject to change

3 Definitions

3.1 ampacity derating factor: A numeric value representing the fractional reduction from a base ampacity cable rating. Ampacity derating factors are associated with specific installation conditions not presently addressed in the base ampacity.

3.2 ampacity correction factor: A numeric value equal to one minus the ampacity derating factor.

3.3 cable penetration fire stop: Material, devices or an assembly of parts providing ;cable penetrations through fire-rated walls, floors, floor-ceiling assemblies, and maintaining required fire rating.

3.4 cable tray: A raceway resembling a ladder and usually constructed of metal. Other styles of trays include solid-bottom, and channel type.

3.5 fire protected cable systems: Cable systems to which a fire protective enclosure material has been applied either in direct contact with the cables or applied over the raceway to protect cables from fire.

3.6 fire retardant coatings: Material applied along the length of cables or in localized areas, as deemed necessary, to retard the flame propagation properties of cables in trays.

3.7 raceway: Any channel that is designed and used expressly for supporting or enclosing wires, cable or bus bars. Raceways consist primarily of, but are not restricted to, cable trays and conduit.

4 Test Description

4.1 General

4.1.1 Applicability This method shall apply to cables manufactured in accordance with either ICEA S-66-524, ICEA S-19-81, or ICEA S-68-516 and rated either 600, 2 000, 5 000, 8 000, or 15 000 V. This test is limited to cables installed in the following configurations:

(1) Tray with a fire protected cable system where cables are arranged consistent with ICEA P-54-440.

Copyright © 1993 IEEE. All rights reserved
This is an unapproved IEEE Standards Draft, subject to change

(2) Conduit or free air drop with a fire or electrical separation protected cable system.

(3) Block-out, conduit or sleeve type penetration type fire stop.

4.1.2 **Method of Testing** Cable ampacity or ampacity derating factor shall be established by testing in accordance with the configurations shown in Figures 4-1, 4-2, and 4-3. Test results may also be used to confirm analytical heat transfer models.

4.2 Test Specimens - Protected Cable Systems

4.2.1 **Cable Selection** The cables used in the ampacity tests shall have copper conductor(s), 600 V rated cross-linked polyethylene or ethylene-propylene rubber insulation and a chlorosulfonated polyethylene jacket. Depending on the specific test (as outlined below) the cables shall be rated 600 V and of either 3/C No.6 AWG, 3- 1/C 750 kcmil construction. If a user opts to test using conduits sizes other than 1 and 4 inch (see section 4.2.3) then a 3/C, triplex or 3-1/C cable shall be chosen to achieve the maximum allowable fill. When 1/C cables are used for conduit or free air drops, they shall be tie wrapped at intervals not to exceed 2 feet.

4.2.2 **Cable Fill** The ampacity of a protected cable system is dependent on a number of factors, including: the actual cable depth in a tray, the number of conductors in a conduit and free air-drop, and the conductor size of the cables. The ampacity derating factor of the barrier/wrap systems, however, is not dependent on the these conditions. In order to avoid introducing other types of derating factors, e.g. multiple conductors in a conduit or close conduit grouping factors, the following cable fill conditions shall be used.

(1) Random filled tray: Three layers of 3/C No.6 AWG cables, 0.75 inch diameter, 32 cables per layer, resulting in a depth of 2.25 inches for the 24 inch wide tray.

(2) Conduit: Single circuit of three conductors sized to match the conduit in accordance with NFPA-70 or the largest commercially available size, not to exceed 750 kcmil, generally used in conduits. (See Section 4.2.1)

(3) Free-Air Drop: Fill requirements do not apply.

4.2.3 **Conduit** Conduit ampacity tests shall utilize 1 and 4 inch rigid steel conduits. Tests conducted using these two sizes shall be considered representative of all sizes provided that the fire protective system installation methods and configurations are consistent across the entire size range. Where the installation methods, configurations, or fit differ according to conduit size the user shall test sizes to bound the

Copyright © 1993 IEEE. All rights reserved
This is an unapproved IEEE Standards Draft, subject to change

specific application. Conduits shall be a minimum of 12 ft long. The conduit shall be isolated from its supporting structure by wooden blocks.

In addition to the conduit, the junction boxes and pull boxes may also be enclosed with a protective material. Since the surface area of the boxes is significantly greater than the conduit, heat transfer is improved proportionally. Therefore, junction boxes and pull boxes do not need to be included in the ampacity test.

4.2.4 **Tray** A commercially available 4 inch deep - 24 inch wide ladder-back style steel cable tray, a minimum of 12 ft long shall be used. The tray shall be isolated from the support by wooden blocks.

4.2.5 **Free-Air Drop** Ampacity tests shall be conducted on free air drop configurations consisting of 1-3/C No.6 AWG and 3-1/C 750 kcmil, respectively. Tests conducted using these two sizes shall be considered representative of all sizes provided that the fire protective system installation methods and configurations are consistent across the entire size range. Where the installation methods, configurations, or fit differ according to size the user shall test sizes to bound the specific application. Free air drops shall be a minimum of 12 ft long. The test specimen shall be supported to prevent sagging and shall be isolated from its supporting structure by wooden blocks.

4.2.6 **Fire Protective Material** The protective material shall be representative of the installed product at maximum thickness. If the product is typically applied in a non-uniform manner, e.g. overlap joint when product is butted, then these sections shall be included in the test.

Some fire-protected cable systems utilize an end seal where the barrier or wrap ends in order to prevent the intrusion of hot gases or fire into the end of the tray or conduit. If end seal is less than six inches, then the seal may be excluded from the test. Otherwise, the end seal should be treated and tested in a similar manner to cable fire stop, except the wall section is excluded.

4.3 Test Specimens - Cable Penetration Fire Stop

4.3.1 **Cable Selection** The ampacity of the cable in a cable penetration fire stop varies with cable conductor size, conductor material, and manner of cable installation outside the fire stop. Tests conducted using a 600 V 3/C No. 12 AWG, aluminum conductor with cross-linked polyethylene insulation and an overall chlorosulfonated polyethylene jacket shall be considered representative of other voltage ratings, conductor sizes and copper or aluminum conductors installed in random filled tray. Tests on single conductor 2/0 AWG aluminum conductor 600 V, with cross-linked polyethylene insulation and a chlorosulfonated polyethylene jacket shall be considered to be representative of cables installed in trays with maintained spacing. Tests performed using copper

Copyright © 1993 IEEE. All rights reserved
This is an unapproved IEEE Standards Draft, subject to change

conductor cables may be used only to establish the derating factors for applications using copper conductor.

In cable bus applications, where larger conductor sizes are generally used, cable specimen shall be the smallest conductor in the anticipated use range. Aluminum conductor material shall be used, unless design is limited to copper conductors.

4.3.2 Cable Fill The tray shall be filled to a one inch depth. The corresponding current in ICEA P-54-440 shall be applied.

Ampacity tests on fire stops installed in trays with maintained spacing (per ICEA P-46-426) shall be conducted on a single layer of 2/0 cables separated by one diameter.

Plant specific design conditions may be tested. However, the results may not be extrapolated to lower percentage filled cable trays.

Conduit fill shall be identical to that specified in Section 4.2.2.

4.3.3 Conduit The conduit specimen shall be identical to that used in section 4.2.3., except that the length of the conduit shall be twenty feet. No fire protective material shall be applied to the conduit other than the fire stop.

4.3.4 Tray Tray specimen shall be identical to that used in section 4.2.4, except the length of the tray shall be twenty feet plus the width of the wall. No fire protective material shall be applied to the tray other than the fire stop.

4.3.5 Floor/Wall Assemblies The type of floor/wall construction and thickness affect the ampacity derating of the system. Thicker floors/walls shall be representative of thinner floors/walls of the same construction. Floors/walls constructed of lower thermal conductive materials shall be representative of floors/walls of higher thermal conductive materials.

The floor/wall assembly must maintain a minimum of 24 inches from its outer edge to the edge of the blockout.

For floor assemblies, the raceways may contain 90 degree bends located at a minimum of 24 inches from each surface of the floor assembly.

4.3.6 Fire Stop Design The fire stop configuration to be ampacity tested shall be representative of the maximum permitted installation tolerances, in contrast to fire tests which are typically conducted on fire stops at the minimum tolerance.

4.4 Test Facility

Copyright © 1993 IEEE. All rights reserved
This is an unapproved IEEE Standards Draft, subject to change

4.4.1 Test Enclosure The ampacity test shall be conducted in an enclosure as shown in figure 4-4, such that the temperature around the specimen shall be controlled to 40°C +/- 2°C. The enclosure shall ensure an even temperature and shall limit drafts on the test specimen. The temperature inside the enclosure shall be measured at no less than three places one foot from the specimen, and in the horizontal plane of the test specimen. The temperature of the enclosure shall be taken as the average of the steady state measurements.

4.4.2 Test Specimen Installation

4.4.2.1 Tray The tray is to be uniformly loaded with a single type of cable. The cables shall be installed in an orderly, symmetric manner, so as to limit the flow of air through the cables and to ensure repeatability. Cable tie wraps shall not be used within the tray.

The cables shall be connected as a single series electrical circuit.

When testing the protected cable systems, a section of insulating blanket shall be placed at the ends of the tray to minimize axial heat flow, such that the average values for the thermocouples at locations 1 and 3 (see Figure 4-1) are within +/- 4°C of the average value for location 2.

4.4.2.2 Conduit The cables shall be pulled into the conduit after installation of the thermocouples. No pulling lubricant shall be used. When three single conductor cables are utilized for the conduit tests, the cables shall be bundled with stainless steel tie wraps or glass cloth electrical tape to ensure thermocouple placement is maintained during insertion or removal.

The cables shall be connected as a single series electrical circuit.

A section of insulating blanket shall be placed at the ends of the conduit to minimize axial heat flow, such that the average values for the thermocouples at locations 1 and 3 (see Figure 4-2) are within +/- 4°C of the average for location 2.

4.4.2.3 Free-Air Drop The cables shall be connected as a single series electrical circuit. When three single conductor cables are utilized for these tests, the cables shall be bundled with stainless steel tie wraps or glass cloth electrical tape to ensure thermocouple placement is maintained.

A section of insulating blanket shall be placed at ends of the free air-drop to minimize axial heat flow, such that the average values for the thermocouples at locations 1 and 3 (see Figure 4-2) are within +/- 4°C of the average for location 2.

Copyright © 1993 IEEE. All rights reserved
This is an unapproved IEEE Standards Draft, subject to change

4.4.2.4 Cable Penetration Fire Stop The cables and raceway penetrating the fire stop floor/wall shall be installed in an identical fashion as during fire testing. This may include special spacing requirements. If the fire stop design permits installation of the cables on the tray rungs or directly on the blockout surface, the bounding condition is considered to be with the cables placed on the tray rungs.

4.4.2.5 Orientation The fire protected raceway test specimens shall be mounted horizontally in order to model worst case orientation and to prevent a "chimney-effect." In the case of fire stop tests, open ends of enclosed raceways must be sealed to eliminate air movement.

4.4.2.6 Installation of Fire Protective Systems The tray and conduit is to be raised off its support after completion of the baseline tests. The protective system shall then be applied in accordance with the method established in the fire or electrical separation testing. The entire assembly shall be lowered back onto the supports while ensuring the assembly is not cracked or otherwise distorted. If the protective system can be removed without disturbing the cables or thermocouple placement, then the baseline tests may be performed before or after testing the protective cable system.

If the product undergoes a curing operation, the test specimen's dry state shall be established by the manufacturer and achieved prior to the test through natural or artificial drying.

If the product is reactive at temperatures below 90°C, then the equilibrium time must be extended based on specific analysis.

4.4.3 Thermocouple Selection and Placement Thermocouples shall be a maximum of 24 AWG, Type T special grade - Copper Constantan with an accuracy of +/- 0.5°C or other thermocouple types which have been calibrated to the same level of accuracy. Thermocouple wire shall have waterproof insulation. Thermocouples shall be placed directly against the conductor.

To attach the thermojunction to the cable, make an approximately 2 inch long slit in the outer jacket of the cable, to expose the insulated conductors. Make a one inch slit in the insulation as shown in Figure 4-5. Insert the thermocouple junction in direct contact with the conductor strands. For three conductor cables, close the insulation slit and seal with a single layer of glass-reinforced electrical tape. For single and three conductor cables, reposition the outer jacket and seal with a single layer of glass-reinforced electrical tape.

The test is intended to identify the temperature of the hottest conductor within the center of the protected cable system and cable penetration fire stop. A set of thermocouples shall be installed at each of the vertical

Copyright © 1993 IEEE. All rights reserved
This is an unapproved IEEE Standards Draft, subject to change

planes along the length of the cable as shown in Figures 4-1, 4-2, and 4-3. Conduit and free-air drops shall have the thermocouples placed on all three conductors. Within the tray assembly, thermocouple leads shall remain in the layer in which they are installed and be routed out the end of the tray in the interstices of the cable mass. For fire protected raceways, the following number of thermocouples shall be placed in each vertical plane:

(1) tray configuration - 5

(2) conduit and free-air drop - 3

For ampacity tests of tray penetration fire stops, 5 thermocouples shall be placed on the conductors in the fire stop in accordance with Figure 4-1. One additional thermocouple shall be placed at 2 foot intervals on one conductor of the center cable in the middle layer on each side of the firestop. (Figure 4-3)

For ampacity tests of conduit or free-air drop penetration fire stops, 3 thermocouples shall be placed on the conductors in the fire stop in accordance with Figure 4-2. One additional thermocouple shall be placed at 2 foot intervals on each side of the fire stop.

4.5 Test Procedure

4.5.1 Baseline Evaluation At least one baseline test for each system, i.e. tray, conduit, free air drop, shall be conducted in order to establish baseline ampacities. Baseline evaluation for a tray assembly must be performed on the same physical specimen used for the derating test. Baseline and derating evaluations for conduits and free-air drops shall be performed using the same instrumented cable set.

4.5.2 Current Source The circuit shall be energized with a 60 Hz, single phase source sufficient to cause the conductor to reach 90°C at location 2 in Figures 4-1, 4-2, and location 1 in Figure 4-3. The current shall be measured to an accuracy of +/- 0.5%. The use of a constant-current amplifier is recommended since the increasing temperature changes the circuit load, i.e. conductor resistance. Alternatively, process control devices can be used to generate and maintain the current source.

4.5.3 Temperature Measurement All temperatures shall be recorded at intervals no greater than one minute. The current in each test circuit shall be adjusted to achieve a hot spot conductor temperature of 90°C +/- 1°C at location 2 for the protected cable systems and location 1 for cable penetration fire stop. The average temperature of thermocouple locations 1 and 3 for the protected cable systems shall be within +/- 4°C of the average temperature reading at location 2. No restrictions are placed on the temperature readings at locations outside the cable penetration fire stop.

Copyright © 1993 IEEE. All rights reserved
This is an unapproved IEEE Standards Draft, subject to change

The cable circuit is considered to be have reached steady state condition when:

(1) A minimum of three hours since the last adjustment of current level or perturbation of the system occurred, and

(2) The rate of change of the average of thermocouple reading at hottest spot (location 2 for Figures 4-1 and 4-2, and location 1 for Figure 4-3) does not exceed +/- 0.2°C per hour for conduit, tray, and free-air drop.

Perturbation of the system conditions includes current adjustment, change in the internal temperature of the enclosure, and addition or removal of insulation on the ends of the tray, conduit or free-air drop. Minor adjustment of current ($\leq$ 0.5%) required to keep the current constant is not considered a perturbation of the system.

In order to statistically assure thermal equilibrium, the conductor temperatures shall be averaged at each sampling period. A linear regression analysis using the least-squares method shall be performed on the data obtained over the preceding 60 minute period. The slope of the line shall be expressed in units of °C per hour. When the absolute value of the slope becomes less than 0.2, equilibrium has been reached.

The degrees of freedom obtained by averaging many thermocouple locations, allows the precision to exceed the +/- C limit of any one thermocouple.

The equations for a linear regression using the least squares fit method are shown below:

$$Y = mX + b \tag{1}$$

$$X = \sum \frac{X}{n} \tag{2}$$

$$Y = \sum \frac{Y}{n} \tag{3}$$

$$m = \frac{\sum XY - \frac{\sum X \sum Y}{n}}{\sum X^2 - \frac{(\sum X)^2}{n}} \tag{4}$$

Copyright © 1993 IEEE. All rights reserved
This is an unapproved IEEE Standards Draft, subject to change

$$b = Y - mX \tag{5}$$

Where:

Y	is the average conductor temperature C
X	is the time increment (min)
m	is the slope of line (C/min)
b	is the Y-axis intercept, C

4.5.4 Enclosure Temperature The temperature within the test enclosure shall be controlled to 40 +/- 2 C. Some induced air movement within the enclosure is necessary to achieve uniform steady-state temperatures. Care must be taken to avoid direct air currents against the test specimens. The method of ambient temperature control within the test enclosure is important. Care must be taken to avoid any additional heat loading on the cables by radiation from a heat source.

Copyright © 1993 IEEE. All rights reserved
This is an unapproved IEEE Standards Draft, subject to change

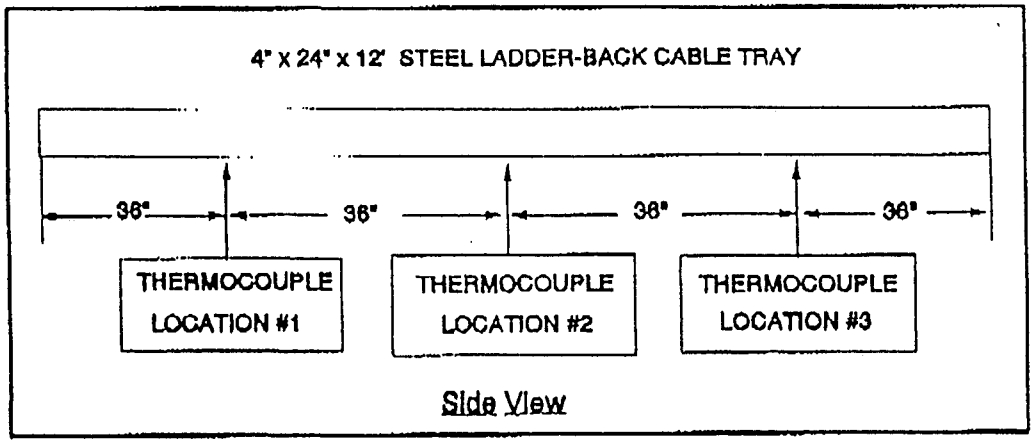

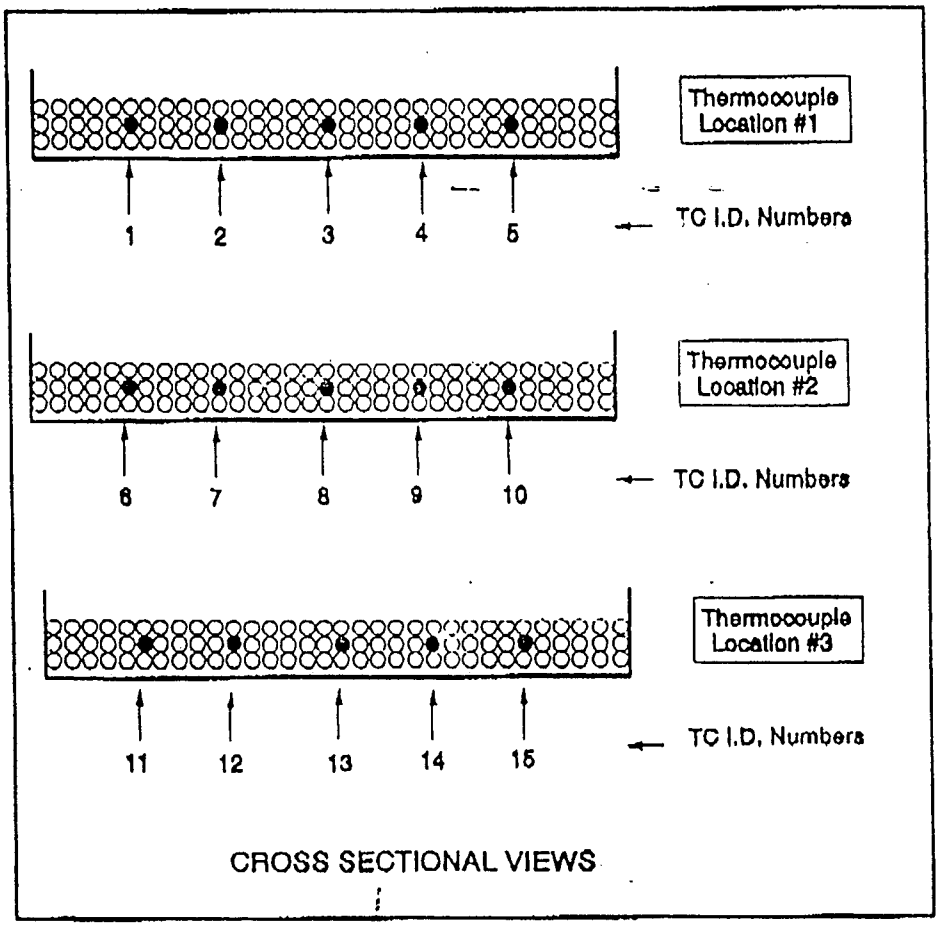

FIG 4-1
Tray Configuration - Protective Cable System

Copyright © 1993 IEEE. All rights reserved
This is an unapproved IEEE Standards Draft, subject to change

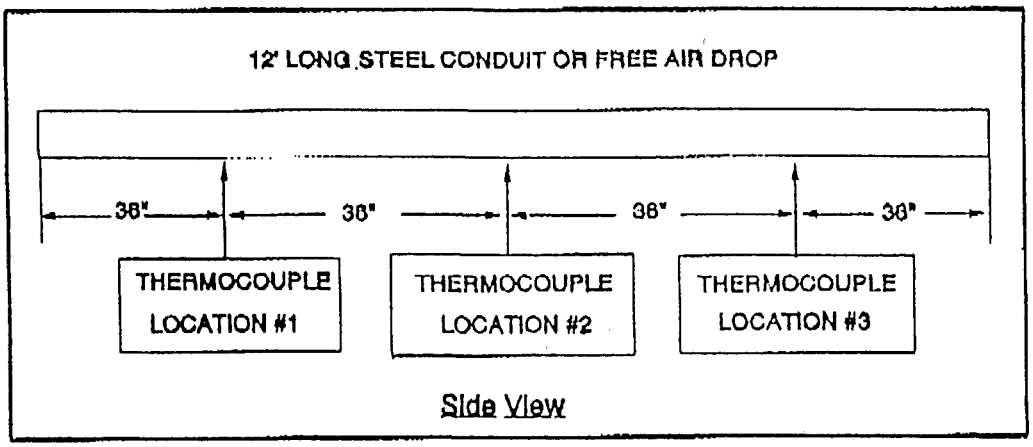

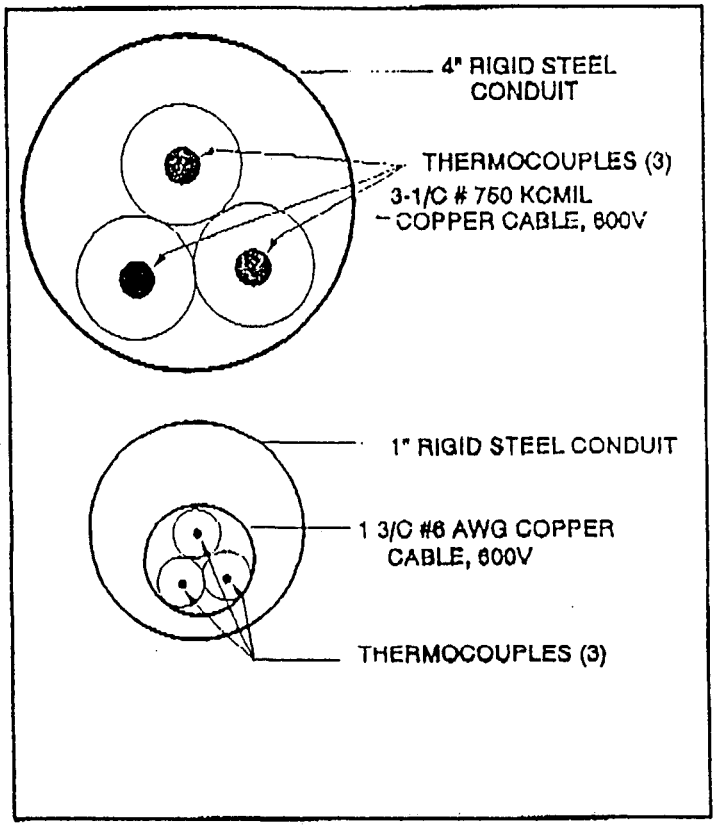

FIG 4-2
Conduit and Free-Air Drop Configurations
- Protective Cable System

Copyright © 1993 IEEE. All rights reserved
This is an unapproved IEEE Standards Draft, subject to change

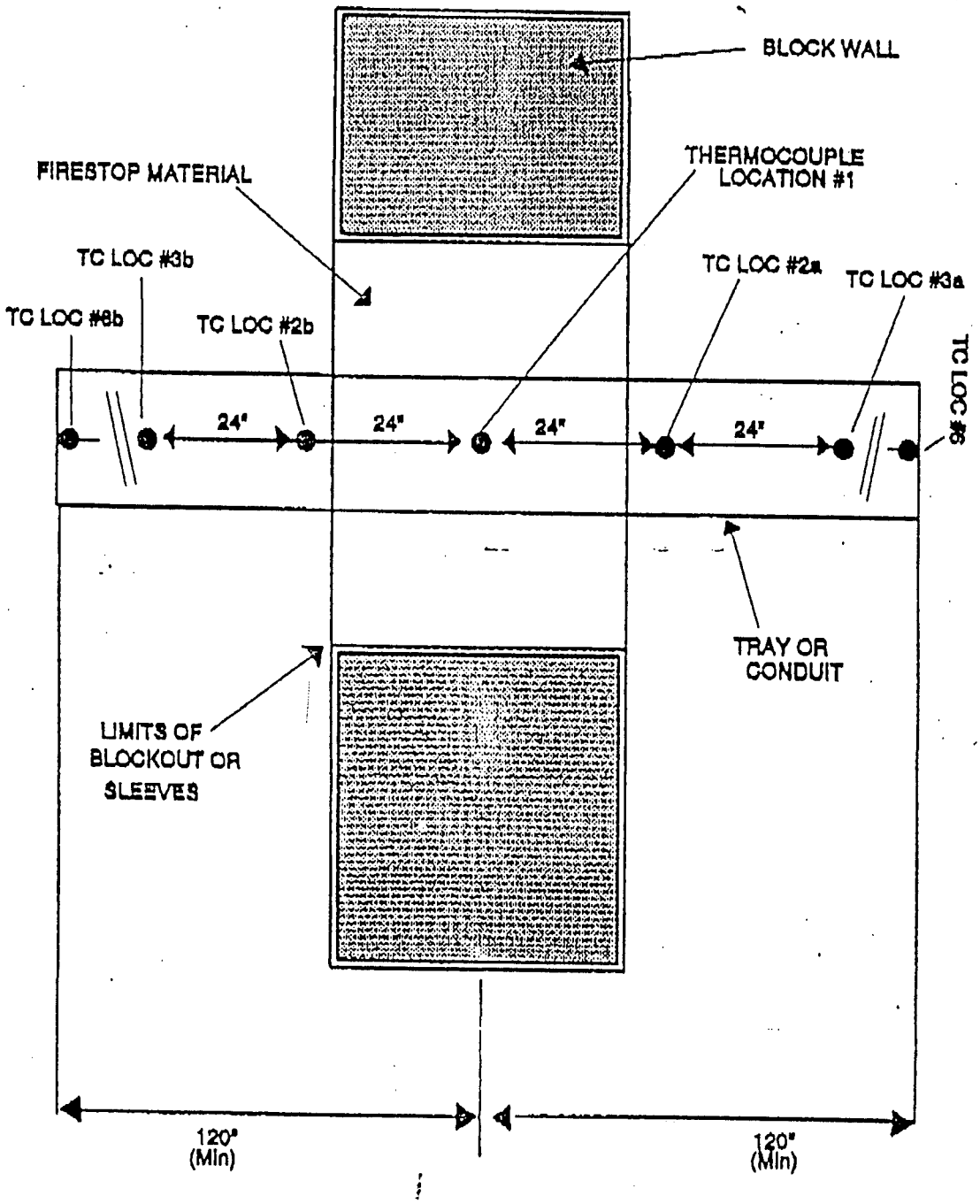

FIG 4-3
Configuration- Cable Penetration Fire Stop

Copyright © 1993 IEEE. All rights reserved
This is an unapproved IEEE Standards Draft, subject to change

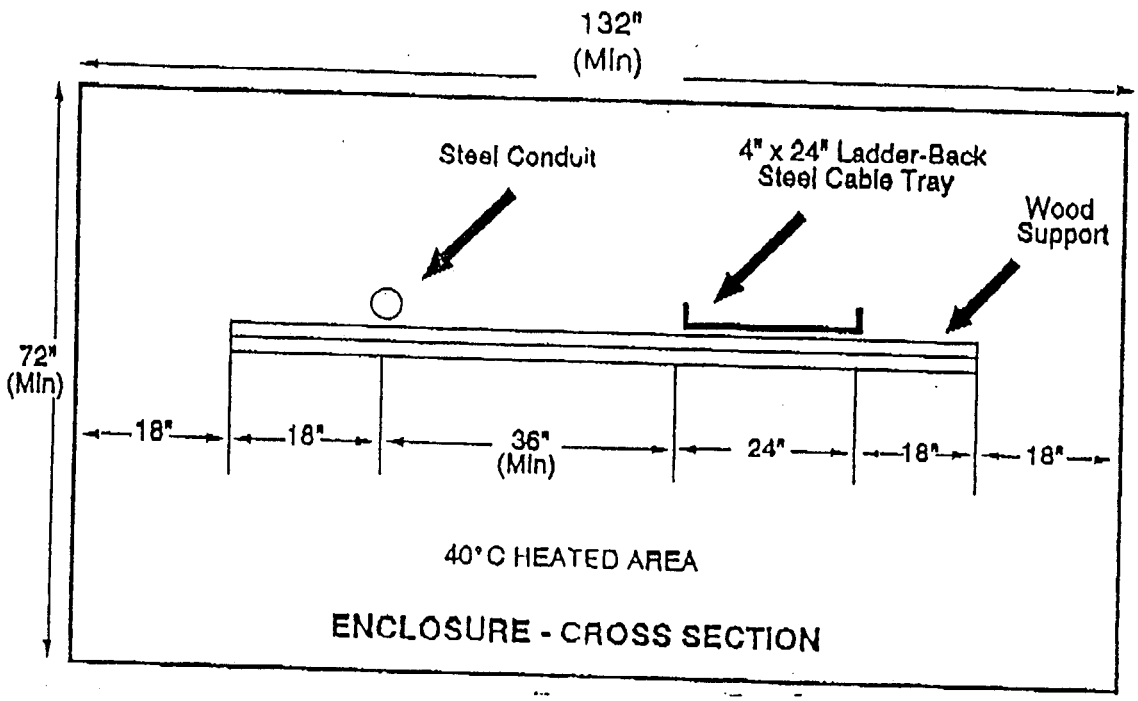

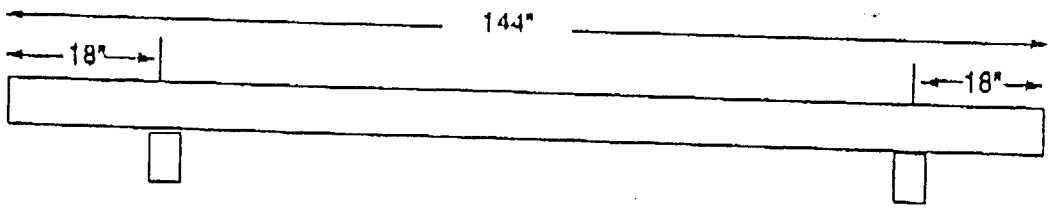

CONDUIT & TRAY SUPPORT POINTS

FIG 4-4
Enclosure and Support Requirements
- Protective Systems

Copyright © 1993 IEEE. All rights reserved
This is an unapproved IEEE Standards Draft, subject to change

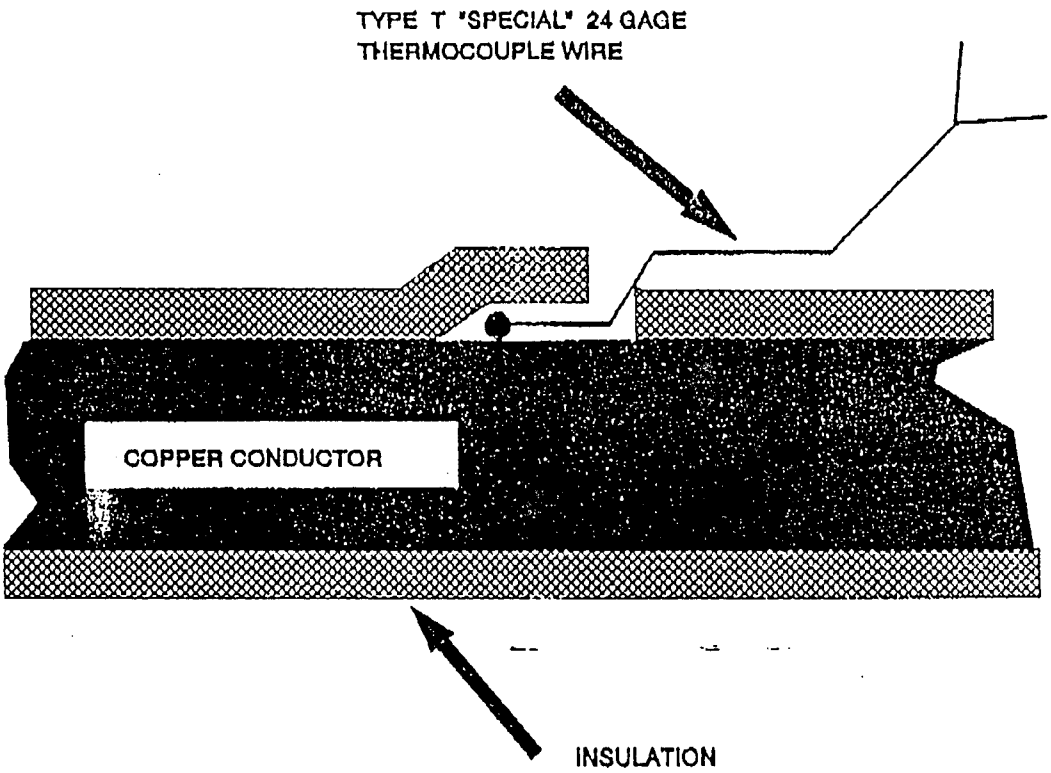

FIG 4-5
Thermocouple Attachment to Conductor

Copyright © 1993 IEEE. All rights reserved
This is an unapproved IEEE Standards Draft, subject to change

5 Evaluation of Test Results

5.1 Normalizing Test Results

After equilibrium has been achieved, the final conductor temperature and the ambient temperature may not match 90 C and 40 C respectively. The results of the baseline and the fire protected cable system tests must be normalized using equation 6 below. The conductor temperature shall be the hottest conductor temperature at location 2 for the protective cable system and location 1 for cable penetration fire stop. The final temperatures must be within the limits established in Section 4.5.4 and 4.5.3.

$$I' = I\sqrt{\frac{(Tc' - Ta')\ (\alpha + Tc)}{(Tc - Ta)\ (\alpha + Tc')}} \qquad (6)$$

where

I	test current at equilibrium, amperes
Tc	hottest conductor temperature at center at equilibrium, C
Ta	measured enclosure ambient temperature, C
I'	normalized current, amperes
Tc'	normalized conductor temperature - 90 C
Ta'	normalized ambient temperature - 40 C
alpha	234.5 for copper or 228.1 for aluminum

5.2 Ampacity Derating Factor

Using the normalized current, as determined from section 5.1, an ampacity derating factor can be calculated using the results of the baseline test and the protected cable system or cable fire stop. The ampacity derating factor (ADF) and ampacity correction factor (ACF) shall be calculated using equations 7 and 8. The user may find it may convenient to express the ampacity results as ampacity correction factor (ACF) for calculation purposes. ACF is applied in a similar fashion as conduit grouping factors and ambient temperature correction factor as shown in ICEA P-46-426.

$$ADF = \frac{(Io - If)}{Io} 100 \qquad (7)$$

Copyright © 1993 IEEE. All rights reserved
This is an unapproved IEEE Standards Draft, subject to change

$$ACF = \frac{If}{Io} \quad (8)$$

Where

Io	is the normalized current for the baseline condition, amperes
If	is the normalized current for the passive fire protected cable system or cable penetration fire stop system.
ADF	is the ampacity derating factor, %
ACF	is the ampacity correction factor

Ampacity derating factors shall be expressed in conjunction with reference to its baseline ampacity standard. This is especially important for cable penetration fire stops where the cable installation method outside the wall has a major influence on the resulting derating factor. Cable Fire stop ampacity derating factor is also restricted in terms of conductor size and material.

Examples illustrating how the ampacity derating factors must be expressed are shown below.

(1) ADF = 18 %, Floor Assembly-Fire Stop Penetration, Product design AAA, applied against ICEA P-46-426 "conduit in air ampacities" for 12 AWG aluminum or copper conductors and larger.

(2) ADF = 7 %, Wall Assembly Fire Stop Penetration, Product design AAA, applied against ICEA P-46-426 "conduit in air ampacities" for 1000 kcmil copper conductors or 1250 kcmil aluminum conductor and larger.

(3) ADF = 20 %, Fire Protective Material - Tray Application, Product design BBB, when applied against ICEA P-54-440.

(4) ADF = 18 %, Electrical Separation Wrap - Free Air Drop, Product design CCC, when applied against ICEA P-46-426 "in free air" ampacities.

6 Documentation of Testing

The test report and the resulting derating factor shall include the following documentation:

(1) Description of the test configuration

(2) Date of the test

(3) Location of the test

(4) Description of the test equipment and test articles

Copyright © 1993 IEEE. All rights reserved
This is an unapproved IEEE Standards Draft, subject to change

(5) Calibration documentation of all thermocouples

(6) Qualification and certification for test personnel

(7) Test procedures used.

(8) Ampacity values determined and accompanying equilibration temperatures.

(9) Provide quality control records for:

(a) Test article construction

(b) Qualification and certification for installation and inspection personnel

(c) Identification and installation of fire barrier material

(d) Thermocouple locations

(e) Cables, size, type, and location

(f) Actual tray and conduit cable fill, and calculated depth of cable fill as defined in ICEA P-54-440

(10) Computer printout and graphic results of the ampacity test

(11) All raw data

(12) 35 mm photographic coverage of the test project

(13) Documentation that product does or does not react at temperatures below 90°C.

(14) Documentation that moisture equilibrium has been achieved.

7 Bibliography

[B1] Stolpe, J., "Ampacities for Cables in Randomly Filled Trays", IEEE Transactions on Power Apparatus and Systems, Vol PAS 90, pp 962-973, 1971

[B2] Nemeth, C.W., RackLiffe, G.B., Legro, J.R., "Ampacites for Cables in Trays with Firestops" IEEE Transactions on Power Apparatus and Systems, Vol PAS 100, No. 7 July 1981

[B3] Herter, V.J., Barry, R.E., Began, T.A., "Ampacity Test of a Silicone Foam Firestop in a Cable Tray" IEEE Transactions on Power Apparatus and Systems, Vol PAS 100, No. 7 July 1981

[B4] Esteves, O.M., "Derating Cables in Trays Traversing Firestops or Wrapped Fireproofing" IEEE Transactions on Power Apparatus and Systems, Vol PAS 102, pp. 1478-1481, 1983

Copyright © 1993 IEEE. All rights reserved
This is an unapproved IEEE Standards Draft, subject to change

[B5] Petty, K.A. "Ampacity of Wrapped Cables" IEEE Transactions on Power Delivery Vol 3 No 1, January 1988

[B6] Hiranandani, A.K. "Rating Power Cables in Wrapped Cable Trays" IEEE Transactions on Power Delivery Vol 3 No 1, January 1988

[B7] Save, P., Engmann, G. "Fire Protection Wrapped Cable Tray Ampacity" IEEE Transactions on Power Generation Vol No , 1989

Copyright © 1993 IEEE. All rights reserved
This is an unapproved IEEE Standards Draft, subject to change

EXCEPTIONS TO IEEE P848/D11

Procedure for the Determination of the Ampacity Derating of Fire Protected Cables

1. Section 5.2.4 states the conduit shall be 12 feet long and supported 18 inches from each end.

   Exception: The conduit is 20 feet long and supported 5 feet from each end.

   Basis: The longer specimen will reduce the affects of heat transfer on the measured temperature. Draft 12 states a minimum of 12 feet.

2. Section 5.3.1 references Figure 3 which shows the enclosure width 132 inches.

   Exception: The enclosure width is 96 inches.

   Basis: The enclosure will be used only for conduit; no trays will be tested so the 96-inch enclosure will be sufficient.

3. Section 5.3.2.2 Part b states that 1-3 conductor 750 MCM copper cable will be used.

   Exception: Three single conductor 750 MCM cables will be bundled together to simulate 1-3 conductor.

   Basis: Draft 12 of the standard states that 3 single conductors can be used.

4. Section 5.3.2.5 states that Type K special grade thermocouples will be used.

   Exception: Type T thermocouples with an accuracy of $\pm$ .5°C will be used.

   Basis: Type T thermocouples verified to be within $\pm$ .5°C are more accurate than the type K special grade. Draft 12 of the standard states that Type T special grade thermocouples or a thermocouple of equivalent accuracy will be used.

5. Section 5.3.2.5 states that three thermocouples will be used to determine the conductor temperatures.

   Exception: Nine thermocouples will be used. Three thermocouples will be used in each conductor.

   Basis: Draft 12 states that three thermocouples will be used in each vertical plane.

EXCEPTIONS TO IEEE P848/D11 (CONTINUED)

Procedure for the Determination of the Ampacity Derating of Fire Protected Cables

6. Section 5.3.2.6 states the testing is to be sequential so that one conduit and cable is to be used for all of the testing.

   Exception Four 4" and four 1" conduits are being used for the test.

   Basis: The same instrumented cable set for the baseline and derating tests for each size conduit will be used as specified by draft 12. Different conduit specimens will be used since each Thermolag configuration has a 30-day curing period after installation.

7. Section 5.3.2.6 states that moisture content in percent moisture will be made on the Thermolag.

   Exception: The moisture content measurement will be made using a hand-held meter recommended by Thermal Science Incorporated (Thermolag manufacturer). Reference Attachment D, Page D-1. This instrumentation will not be traceable back to NIST.

   Basis: Draft 12 states that the moisture content will be reported to ensure that moisture equilibrium has been achieved.

8. Section 5.4.2 states the current value will be reported to 0.1 ampere, but no accuracy is stated.

   Exception: The accuracy for the current measurement will be +/- 1% of reading.

   Basis: Draft 12 states an accuracy of +/- 0.5% instead of an absolute current value. Per Attachment E, this value will be changed to +/- 1% in the final issue of P848.

9. Section 5.4.3 states that the rate of change will not exceed +/- .55°C/hour.

   Exception: A value of +/- .2°C/hour will be used.

   Basis: Draft 12 states the rate of change will be .2°C/hour.

10. Section 5.2.1 states that the cable will be a three conductor.

    Exception: Four conductor cables will be tested in addition to the three conductor cables.

    Basis: The three conductor test has been completed, and inconsistent results were obtained due to inductive heating of the Conduit caused by current imbalance. Use of four conductor cables will eliminate the current imbalance and thus the inductive heating in the conduit. (fed)

REV 2

ATTACHMENT D

THERMAL SCIENCE INCORPORATED ACCEPTANCE CRITERIA FOR MOISTURE CONTENT

February 23, 1993

Tennessee Valley Authority
LP-4H-C
1101 Market Street
Chattanooga, Tennessee 37402

Attention: Mr. William M. Roop, Jr.
Principal Electrical Engineer

Dear Mr. Roop:

In accord with the information presented in the operating instructions for the Delmhorst Moisture Meter, Model-DP, the manufacturer points out that even readings in the "red zone" of the dial indicate a relatively low moisture content, such as in concrete. The manufacturer further points out that a reading of 35 to 70 on the moisture meter usually indicates a range of moisture content between 2 and 4%.

We recommend that for dry acceptance purposes, the THERMO-LAG 330 Prefabricated Panels and Preshaped Conduit Sections be accepted when the Delmhorst Moisture Meter (Model-DP) has a moisture meter reading of less than 70, on the 0 to 100 scale.

We also recommend that in all areas where THERMO-LAG 330-1 Trowel Grade Material has been applied, that the same acceptance standard be used, a moisture meter reading of less than 70 on the 0 to 100 scale of the Delmhorst Moisture Meter (Model-DP).

Yours truly,

B. E. Evans
Quality Control Manager

BEE/mls

Fax No: 615-751-8247

THERMAL SCIENCE, INC. • 2200 CASSENS DR. • ST. LOUIS, MO 63026 • (314) 349-1233
Telex: 209901 (Answerback: TSI UR) • Telecopier (314) 349-1207

ATTACHMENT E

MEMORANDUM FROM CORPORATE ENGINEERING TO DOCUMENT THE CURRENT ACCURACY REQUIREMENT

B44 930302 001

QA RECORD

March 2, 1993

R.L Morley, PSB1B-C

WATTS BAR NUCLEAR PLANT
AMPACITY DERATING TESTS FOR THERMOLAG FIRE BARRIER MATERIAL
CLSD JOB NUMBER 93-0501

The purpose of this memorandum is to confirm information given to your C.L. Rutledge by K.W. Brown on March 1, 1993. During the course of the review of revision 0 of the test plan for the subject task, it was noted that accuracy requirements in Draft 12 of IEEE P-848 contain a typographical error.

Section 5.4.2 of draft 11 of the subject standard required that the current be measured to within 0.1 amps. As was noted during the March 1 review, the 0.1 amp requirement was a carry over from an earlier draft in which only 3/c No. 6 AWG cables were utilized. Subsequently, derating tests for fire protected conduits were revised to require the use of a 4-inch conduit containing 3-1/c 750 kcmil cables but the working group failed to change the accuracy requirements to a percentage of reading. Such an approach would better reflect the wide disparity between the magnitude of current which would be required for No. 6 AWG and 750 kcmil. Consequently, section 4.5.2 of draft 12 of the standard was revised.

Our K.W. Brown is a member of IEEE/ICC Working Group 12-45 which is preparing the standard. He has checked with other members who were present at the February 22-23 meetings in Boston where draft 12 was prepared and has confirmed that the 0.5 percent limit therein was an error. The requirement should have been to measure current to a 1 percent accuracy. The Working Group has already agreed to correct this section.

Therefore, section 5.3.10 of the test plan shall require that currents during the derating tests are measured with an accuracy of 1 percent.

Should you have any questions regarding the above please contact me at 751-7501.

R.E. Miller
LP4H-C

cc: RIMS, MR 2F-C
J.A. Krieg, LP4H-C
W.R. Roop, LP4H-C
K.W. Brown, LP4H-C

TEST PLAN

WATTS BAR NUCLEAR PLANT
TESTING TO DETERMINE AMPACITY DERATING
FACTORS FOR FIRE PROTECTED CABLES

JOB NUMBER 93-0501

Revision 1

March 9, 1993

C. L. Rutledge
C. L. Rutledge
Project Engineer

Engineering Services
Section

W. E. Joly
QA Supervisor

Customer Approval

TEST PLAN

REVISION LOG

Job Number 93-0501

Revision Date	Pages Affected	Description of Change	Prepared By	Approved
Rev. 0 03/02/93	All	Initial Issue	C.L.Rutledge	
Rev. 1 03/09/93	2	Section 5.1.1 Revised description of	C.L.Rutledge	
		test specimen		
		Section 5.1.2 Removed "and couplings"		
	3	Section 5.3.5 Revised description of		
		thermocouple locations		
	4	5.3.11 Add "±"		
	A-2	Revised drawing		

TABLE OF CONTENTS

1.0 Scope

2.0 References

3.0 Quality Assurance

4.0 Receipt Inspection

5.0 Test Procedure

6.0 Report

7.0 Attachments

1.0 SCOPE

The scope of this test is to perform ampacity derating testing for eight configurations of cable and conduit. Four one-inch and four four-inch conduits with various cable configurations will be tested. The testing will be conducted in a temperature stable enclosure and the enclosure temperature, conductor temperature and current will be measured and recorded. This testing will be performed in accordance with P848 Draft 11. Reference Attachment C, pages C-1 through C-45 for a copy of the standards (drafts 11 and 12) and Attachment C, page C-46 and C-47 for a list of the exceptions to draft 11 of this proposed standard.

2.0 REFERENCES

2.1 CLS-QAP-1.1 "Organization"

2.2 CLS-QAP-4.1 "M & TE Calibration Program"

2.3 CLS-QAP-4.7 "Engineering Services Program"

2.4 ANSI N45.2-1971 "Test Control"

2.5 10 CFR 50 Appendix B "Quality Assurance Criteria for Nuclear Power Plants"

3.0 QUALITY ASSURANCE

3.1 Test Equipment

All test equipment and instrumentation to be used in the performance of this test program shall be calibrated in accordance with applicable standards and QA procedures and will conform to applicable portions of ANSI N45.2 and 10 CFR 50 Appendix B except the moisture meter described in Steps 5.3.3 and 5.3.14. Standards used in performing all calibrations are traceable to the National Institute of Standards and Technology (NIST), natural physical constants, or commercially accepted practices.

3.2 Personnel and Procedures

All personnel, procedures, and instructions used in the performance of this test program shall comply with the applicable requirements of the Central Laboratories Services Department (CLSD) Quality Assurance Program.

4.0 RECEIPT INSPECTION

4.1 Tagging

Each conduit configuration shall have a tag attached for identification. The tag shall bear a unique number with the following format, XX-YYYY-Z where XX- YYYY is the job number and Z denotes the individual test sample. All data associated with the conduit configuration will be identified by this number.

4.2 Inspection

The conduit and cable will be inspected to ensure they are free from any physical defects that will prevent testing from being performed.

5.0 TEST PROCEDURE

5.1 Preparation of Test Specimens

5.1.1 Four 20-foot conduit test sections each for one-inch and four-inch conduits will be prepared. | REV 1

5.1.2 Weigh a minimum of one 20-foot section of each one-inch and four-inch conduit to obtain an approximate weight of the conduit. | REV 2

5.1.3 Measure the circumference of one of the four-inch and one of the one-inch conduits. This will be used to calculate the thickness of the Thermolag and Thermolag with upgrade after it has been applied to the conduit.

5.1.4 Each section of conduit shall be supported 60 inches from each end and shall be thermally isolated from the conduit. This shall be accomplished by installing a mineral fiber blanket and/or blocks of wood to form a thermal break.

5.1.5 Each of the following configurations will be prepared.

1) One-inch conduit with no Thermolag (baseline)
2) One-inch conduit with 1/2-inch Thermolag
3) One-inch conduit with 1/2-inch Thermolag and 1/4 inch upgrade
4) One-inch conduit with 1/4-inch Thermolag and 1/4-inch upgrade
5) Four-inch conduit with no Thermolag (baseline)
6) Four-inch conduit with 1/2-inch Thermolag
7) Four-inch conduit with 1/2-inch Thermolag and 1/4-inch upgrade
8) Four-inch conduit with 1/4-inch Thermolag and 1/4-inch upgrade

TVA Nuclear Engineering will supply personnel to assemble these test configurations.

5.2 Preparation of the Test Facility

5.2.1 An enclosure shall be constructed so that the temperature around the specimen shall be controlled at the test temperature of 40°C ± 2°C. Some induced air movement within the enclosure is necessary to achieve uniform steady-state temperatures, but care will be taken to avoid direct air currents against the test specimens. Method of ambient temperature control within the test enclosure is important and care will be taken to avoid any additional heat loading on the cables by radiation from heat sources.

5.2.2 The temperature inside the enclosure shall be measured at no less than three places one foot from the specimen and in the horizontal plane of the test specimen. The temperature of the enclosure will be taken as the average of the steady state measurements.

5.3 Test Procedure

5.3.1 Weigh the conduit and Thermolag configurations. Record the information in the log book.

5.3.2 Measure the Thermolag circumference at 20 places along the length of each conduit and average the data. Using the baseline measurement, calculate the Thermolag thickness. Record the information in the log book.

5.3.3 Measure the moisture content of the Thermolag using a hand held moisture meter. Measurements will be taken on the top and bottom exterior of the conduit at the midsection. This measurement shall be made a minimum of two times. The first measurement shall be at least 24 hours prior to beginning the test and the second measurement shall be within four hours of beginning the testing. The moisture instrument is not traceable to NIST.

5.3.4 One three conductor #6 AWG shall be prepared for the one-inch conduits and single conductor 750 KCM copper cables shall be prepared to simulate a three conductor cable for the four-inch conduits. The same prepared cables will be used for testing each configuration of conduit and Thermolag.

5.3.5 Thermocouples with be installed in three locations as shown in Attachment A, page A-2. The outer jacket will be split or a flap cut, and the inner insulation for each of the conductors will be split or a flap cut. The thermojunction for the thermocouple (24 gage, Type T with an accuracy of ± 0.5°C) will be inserted into the strands of each of the three conductors. The slit/flap will be resealed with a single layer of spiral wrap of electrical tape. This configuration will have a total of nine thermocouples for each test specimen. The thermocouple lead wires shall be bundled in the center of the three 750 mcm conductors. The cable and thermocouples shall be tied with tape or stainless steel bands every two feet. REV 1

5.3.6 The cables with the thermocouples installed shall be pulled into place in the conduit.

5.3.7 The cables shall be connected as a single series electrical circuit, which contains all conductors in the system.

5.3.8 The cables which penetrate the end of the conduit shall be wrapped with thermal insulation. Electrically heated tape may be used to allow the end of the cable to be adjusted to keep the two outer thermocouples within 4°C of the center.

5.3.9 Seal the ends of the conduit with insulation material.

5.3.10 The circuit shall be energized with 60 Hz, single phase alternating current sufficient to reach a steady-state temperature of 90°C at the hottest single point monitored at location two. (Reference Attachment A, page A-2.) The current values measured shall be reported to the nearest 0.1 ampere, and will be accurate to ± 1% of reading.

5.3.11 The temperature measurements will be recorded on a data logger and at intervals no greater than 1 minute. The current in each test circuit shall be adjusted to achieve a hot spot conductor temperature of 90°C ± 1.1°C at location #2. The average temperatures at locations #1 and #3 shall be within ± 4°C of the average temperature readings at location #2. REV 1

5.3.12 The system will be considered to be in steady state condition when a three-hour period has elapsed since any perturbation of the system occurred (current adjustment, box temperature change, additional insulation placed on ends, etc.) and the rate of change of the average of all monitored conductor temperatures in that circuitry does not exceed ± .2°C. Readjustment of the current flow to a circuit in order to maintain a given amperage value is not to be considered a perturbation.

5.3.13 In order to statistically assure thermal equilibrium, the conductor temperature will be averaged at each sampling period and a linear regression analysis performed on the data obtained from that and all other averages taken of the preceding 60-minute period. The slope of the line will be in °C/hour. As soon as the absolute value of the slope of these data becomes less than 0.2, equilibrium has been reached. Reference Attachment B for a detailed procedure for performing this analysis. This will be performed using computerized data retrieval and analysis. (Reference Attachment A, page A-1 for test setup.)

5.3.14 Measure the moisture content of the Thermolag using a hand held moisture meter. Measurements will be taken on the top and bottom exterior of the conduit at the midsection. This measurement shall be made within four hours of completing the test. The moisture instrument is not traceable to NIST.

6.0 REPORT

6.1 Final Report

The final report shall describe the test requirements, report the results of the tests, and reference procedures and test instructions required to perform this test plan. The following information specifically shall be included.

1. Description of the test configuration.
2. Date of the test.
3. Location of the test.
4. Description of the test equipment and test articles.
5. Calibration documentation of all thermocouples.
6. Qualification and certification for test personnel.
7. Test procedures used.
8. Ampacity values determined and accompanying equilibrium temperatures.
9. Description of:
   a. Test article construction
   b. Installation and inspection procedure
   c. Identification and installation of fire barrier material
   d. Thermocouple locations
   e. Cables, size, type, and location
10. Computer printout and graphic results of the ampacity test.
11. All raw data.
12. 35mm photographic coverage of the test project.
13. Provide a chronological log (Event Log) of all activities from receipt of materials through final test report.

6.2 Anomalies

All abnormal or unusual occurrences related to the performance of the test instrumentation, test fixtures, or test specimens shall be reported as an anomaly. This shall also include deficiencies in test methods, procedures, instructions and any deviation from the test plan.

A notice of anomaly report shall be initiated and forwarded to the customer once an anomaly has been identified. All anomalies shall be investigated, their impact on the test shall be established, and corrective action acceptable to the customer accomplished prior to continuation of any testing. Final customer acceptance shall be documented by the customer's approval of the notice of anomaly report.

7.0 ATTACHMENTS

7.1 Attachment A - Test Setup

7.2 Attachment B - Linear Regression Fit Method

7.3 Attachment C - Drafts 11 and 12 of IEEE P848 and Exceptions to Draft 11

7.4 Attachment D - Thermal Science Incorporated Acceptance Criteria for Moisture Content

7.5 Attachment E - Memorandum from Corporate Engineering to document the current accuracy requirement

0186T

ATTACHMENT A

TEST SETUP

TEST SET-UP FOR ONE CONDUIT AND CABLE ARRANGEMENT TYPICAL OF TWO

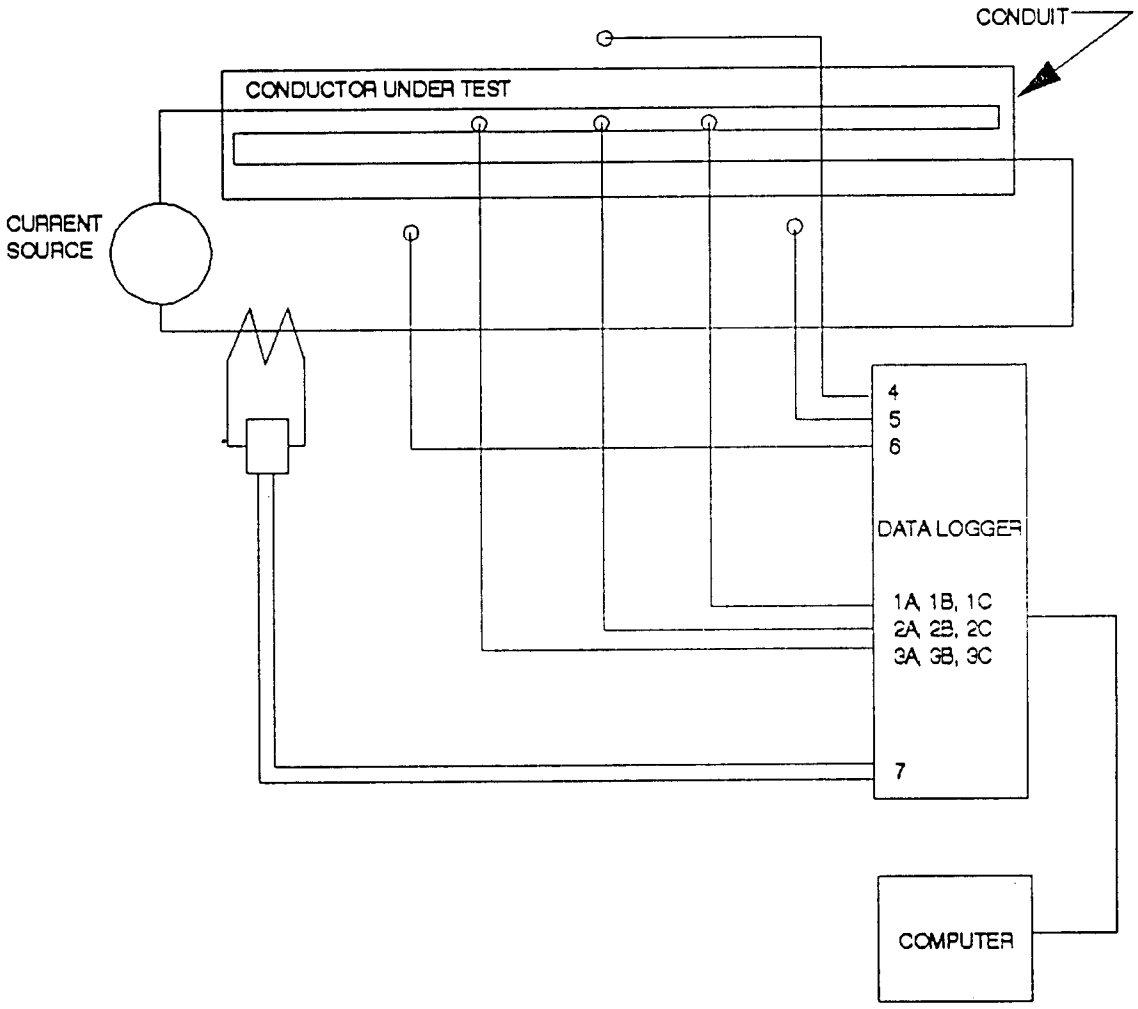

INPUTS 1, 2, AND 3 AVERAGED AND USED TO CALCULATE LINEAR REGRESSION.
EACH CONDUCTOR WILL HAVE A THERMOCOUPLE INSTALLED IN IT. THIS WILL YIELD A TOTAL OF NINE TEMPERATURES TO BE AVERAGED.
THE SLOPE OF THE LINE MUST BE LESS THAN THE ABSOLUTE VALUE OF 0.2
INPUTS 4, 5, AND 6 AVERAGED FOR ROOM TEMPERATURE 40 DEG C +/- 2 DEG C
INPUT 7 IS THE CURRENT MEASURED IN THE CIRCUIT BY MEANS OF A CURRENT TRANSFORMER AND CURRENT TRANSDUCER.

C:\FL\CINDY\9305014.DWG

THERMOCOUPLE LOCATIONS

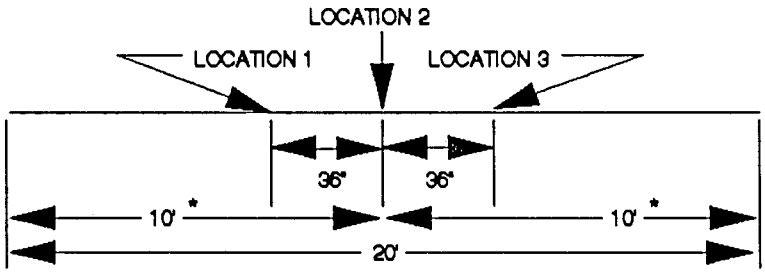

REV 1

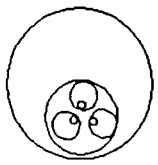

THERMOCOUPLE GOES ON THE CONDUCTORS
ONE ON EACH CONDUCTOR AT EACH LOCATION.

ENCLOSURE WALLS A MINIMUM OF 18 INCHES FROM THE SUPPORTS
SUPPORTS LOCATED 5 FEET FROM EACH END.

* THE POSITION OF LOCATION #2, THE CENTER THERMOCOUPLE, MAY BE CHANGED RELATIVE TO THE END OF THE CONDUIT (IE NOT AT THE CENTER OF THE CONDUIT SECTION).
THE POSITION OF THE THERMOCOUPLES AT LOCATIONS #1 AND #3 WILL BE 36" FROM LOCATION #2. THE APPROXIMATE LOCATION OF THE THERMOCOUPLES WITHIN THE TEST SECTION WILL BE NOTED IN THE LOG BOOK.

C:\FL\CINDY\9305011.DWG

ATTACHMENT B

LINEAR REGRESSION METHOD

As an example the least-squares technique, consider the conduit in Attachment A, page A-1. At each sampling time, an average temperature of 9 thermocouples will be calculated. This value will then be added to the top of an array large enough the hold 60 minutes worth of these averages, and the oldest value discarded. A linear regression fit is then performed on the array. When the next data sampling is completed, the entire process is repeated, thus yielding a linear regression fit of the data from the previous 60 minutes. As each new data point is added to the array, all previous ones are shifted down on time increment until each is finally discarded due to the fixed size of the array.

$$Y = mX + b \qquad \overline{X} = \sum X/n \qquad \overline{Y} = \sum Y/n$$

$$m = \frac{\sum XY - \dfrac{\sum X \sum Y}{n}}{\sum X^2 - \dfrac{(\sum X)^2}{n}}$$

$$b = \overline{Y} - m\overline{X}$$

WHERE:

X=AVERAGE CONDUCTOR TEMPERATURE (DEG C)

Y=TIME INCREMENT (MIN)

M=SLOPE OF LINE(DEG C/MIN)

B=Y-AXIS INTERCEPT 9DEG C)

C:\FL\CINDY\9305016.DWG

ATTACHMENT C

DRAFTS 11 AND 12 OF IEEE P848 AND EXCEPTIONS TO DRAFT 11

ATTACHMENT 2

April 6, 1992

P848/D11

PROCEDURE FOR THE DETERMINATION OF THE AMPACITY DERATING OF FIRE PROTECTED CABLES

Prepared by Task Group 12-45
of the Test and Measurements Subcommittee #12
of the IEEE Insulated Conductors Committee

All rights reserved by the Institute of Electrical and Electronics Engineers, Inc.

At the time this draft was completed, the Task Group on Procedure for the Determination of the Ampacity Derating of Fire Protected Cables had the following membership.

A.K. Gwal, Chairman

T. J. Al-Hussaini
P. Bhatia
E. A. Capouch
E. J. Coffey
E. J. D'Aquanno
R. Das
J. Daly
P. J. Finnerty
J. B. Gardner
P. A. Giaccaglia
A. Hiranandani
C.V. Johnson
A.E. Kollar
R. G. Koza
R. Licht
J. E. Merando, Jr.
K. W. Prier
D. N. Priest
B. E. Reagan
G. A. Remaley
P. D. Skelly
M. Spurlock
W. Torok
J. R. Tuzinski
F. W. Van Nest
T. A. Venkataraman
J. G. Waligorski

Other individuals who have contributed are:

K. W. Brown
D. C. Gasda

PROCEDURE

for the Determination

of the

AMPACITY DERATING OF FIRE PROTECTED CABLES

DRAFT 11

April 1992

INTRODUCTION

Many installations incorporate individual or grouped cables which do not limit the flame propagation under fire conditions. This deficiency can be attributed to conventional cable constructions, such as polyethylene insulated PVC jacketed control cables; which were popular in the sixties and early seventies. Such cables do not meet the flame spread criteria when subjected to the vertical tray flame test which has been accepted in one form or another. Other installations which fall in the same category include metal sheathed or armored vertical shaft cables with overall polyethylene jacket and secured with clamps at various intervals. Polyethylene jacket is used because of its high resistance to creep under pressure in the clamp area to support the sheer weight of the cable.

The foregoing installations include industrial, commercial, marine, nuclear or fossil generating stations and others.

To retard the flame propagation properties of cables in cable trays, protective coatings are applied either along the entire length of the cable(s) or in certain sections as deemed necessary. The flame retardant coatings may be in a form of tapes, blankets, liquids or mastics applied to individual or to grouped cables, both for retrofitting existing installations or for new installations.

1. PURPOSE

The purpose of the standard is to provide a test procedure which may be used to determine the ampacity derating required for fire protected cables in conduit, in penetrations (fire stop) and in cable tray systems.

2. SCOPE

This standard provides a detailed procedure for determining the ampacity derating required for fire protected cable systems. The tests are intended to be used to determine the ampacity derating of fire protected systems which is to be applied to the ampacity of cables determined by standard methods such as ICEA P-46-426 Power Cable Ampacity Volumes 1 & 2, and ICEA P-54-440 Cables in Open-top Cable Trays.

2.1 General

The procedure presented in this standard includes the principles and methods of testing. This test procedure will provide the ampacity derating of a fire protected cable system.

2.2 Applicability

Fire protected cable systems outlined herein are intended for use in power generating stations, both nuclear and fossil, as well as other applicable commercial and industrial installations, both outdoors and indoor. The categories of cables include, but are not limited to: power, control, and instrumentation including signal and communication cables. Testing of flame retardant coatings on horizontal cables will qualify the coatings for all orientations. The tests as described herein are intended to be used in determining the derating factor, which may be required for fire protected cables in conduits and trays. The ampacity of the cable in raceway will typically have first been determined using accepted practices such as ICEA P-46-426 Power Cable Ampacities Volumes I and II, and ICEA P-54-440 Cables in Open-Top Cable Trays.

The user of flame retardant coatings is cautioned to determine that the coating is compatible with the cable materials with which it comes in contact and with the environment in which it is installed. The user may specify tests in addition to those specified in this standard to reflect the installation conditions, e.g., for nuclear stations, the user may wish to add irradiation test or effects of added weight; or for outdoor installations, the user may wish to add a U.V. resistance test.

3. DEFINITIONS

These definitions establish the meanings of words in the context of their use in this standard.

Fire Protected Cable Systems

Cable systems to which an application of a flame retardant barrier, fire resistive barrier or coating (flame retardant coating) to protect cables from fires from any cause has been applied.

Flame Retardant Coatings

A material applied to a completed cable or assembly of cables to prevent the propagation of flame when exposed to a flame source. Flame retardant coatings include tapes, blankets, liquids, flame retardant mechanical system or mastics.

Passive Fire Protection Systems

Systems which embody fire resistant construction such as coatings, barriers, walls, and penetrations (fire stops) as opposed to water sprinkler systems or gaseous extinguishing systems.

Through-Penetration Fire-stop

A specific construction of devices, fill materials, or both, designed to resist the penetration of fire through those openings in fire resistive floors or walls that are intended to accommodate electric cables, raceways and mechanical service penetrations.

Ampacity Derating Factor

A factor applicable to the ampacity rating of a cable (or other device) to account for the adverse affects of some installation or environmental condition.

Raceway

Any channel that is designed and used expressly for supporting or enclosing wires, cables, or bus bars. Raceways consist primarily of, but are not restricted to, cable trays and conduits.

Cable Tray

A continuous rigid structure used to support cables. Cable trays include ladders, troughs, channels and other similar structures. Conduits are not included in this category.

Enclosures

A surrounding case or housing used to protect the contained equipment and prevent personnel from accidentally contacting live parts.

4. REFERENCES

The following standards were used as references in preparing this standard and may be useful in the interpretation of its meaning:

ICEA P-46-426/IEEE S-135
Power Cable Ampacities, Vols. 1 and 2. Dated 1962 (Reprinted in 1984).

ICEA P-54-440/NEMA WC-51
Ampacities - Cable in Open Top Cable Trays. Dated 1986.

5. TEST DESCRIPTION

5.1 General

This section describes the method for determining ampacities of cable passing through single tray and conduit with and without a passive fire protection system.

5.1.1 Applicability

This method shall be applicable to a single cable or groups of cables enclosed in a passive fire protection system. Cables may be contained in a raceway or as dictated by the actual installation.

5.1.2 Method of Testing

Ampacity derating for cables of a passive fire protective system shall be by testing. Testing shall be performed using the configurations depicted in Figures 1 and 2. As an alternative, tests may be performed using representative assembly which can be analyzed to show its applicability to actual installed conditions. Results are also applicable for 1000 volts and higher rated cables.

5.2 Test Specimens

5.2.1 Cable Selection

The cable to be utilized is chosen as one which is representative of a wide range of cables. The selection of a 3 conductor cross link polyethylene insulated, #6 AWG 600 volts copper cable with an overall chlorosulfonated polyethylene (i.e. hypalon) jacket was chosen as representative.

5.2.2 Cable Fill

Cable fill is the ratio of cable area to the inside area of the tray expressed in percentage. A 40 percent cable fill, as determined from actual measurement shall be used for cable trays.

5.2.3 Cable Layout

The length of both the conduit and the tray shall be twelve feet. One to two feet of cable shall extend out each end and shall be wrapped with unfaced fiberglass blanket insulation (or electrically-heated tape) as necessary to eliminate heat flow out of raceway ends.

5.2.4 Conduit

The conduit system shall be 4 inch and 1 inch steel rigid conduit, 12 feet long supported every 18 inches from each end by a horizontal piece of "H"-shaped or 2" x 2" square structural tubing.

5.2.5 Tray

The tray shall be a 4 inch deep, 24 inch wide ladder-back steel cable tray 12 feet and support similarly to the conduit system. The tray and conduit systems, if tested together, must be at least 36 inches apart along their lengths.

5.2.6 Through-Penetration Fire-stops

A through-penetration fire-stop intended for installation in a fire resistive floor assembly, wall assembly, or both, is to be installed in a wall section so that the electrical cables pass horizontally through the wall. The through-penetration fire-stop is to be installed in

accordance with all requirements specified for the fire-stop being tested.

The sample wall section is to be representative of that specified for the through-penetration fire-stop. The thickness of the wall section is to be equal to the maximum thickness of the fir-estop system or device. The size of the through opening in the wall section is to be representative of the through opening size specified for the through-penetration fire-stop.

The fire protective system is to be installed around the electrical cable(s) and raceway(s) in accordance with all requirements specified for the system.

5.3 Test Facility

5.3.1 Test Room

The ampacity test shall be conducted in an enclosure as defined in Figure 3. The test specimen shall be suitably enclosed such that temperature around the specimen shall be controlled at the test temperature of 40°C±2°C. The enclosure surrounding the test specimen shall be of even temperature, but must not cause drafts on the test specimen. The temperature inside the enclosure shall be measured at no less than three places one foot from the specimen, and in the horizontal plane of the test specimen. The temperature of the enclosure shall be taken as the average of the steady state measurements.

5.3.2 Cable Installation

5.3.2.1 Tray

The tray is to be loaded with three conductor #6 AWG, 3/c copper cable, with an overall chlorosulfonated polyethylene jacket. The tray fill should be based on 40 percent fill.

Tray cables should be installed in an orderly, symmetric manner, so as to limit the flow of air through the bundle, and to facilitate inter and intra-laboratory repeatability of these tests. The cables shall be connected as a single series electrical circuit, which contains all conductors in the system. The tray is to be supported by two horizontal pieces of "H"-shaped or a suitable support system, located as shown in Figure 3. A 3" x 25" piece

of 1" thick mineral fiber blanket shall be placed between the tray and support system to form a thermal break. Thermal insulation (e.g., fiberglass or electrically-heated tape) shall be wrapped around the cable which extends out of both ends of the tray to allow adjustment of end temperatures. The end temperatures must be adjusted such that the average values for the thermocouples at locations 1 and 3 are within 4°C of the average for location 2 to minimize axial heat flow.

5.3.2.2 Conduit

Since the application of the fire protection system may result in differing derating for different conduit sizes, two sizes of conduits shall be tested:

(a) 1 inch rigid steel conduit with one 3/c No 6 AWG copper cable

(b) 4 inch rigid steel conduit with one 3/c, 750 Kcmil copper cable

Derating for both sizes shall be reported. Lowest factor shall be used for ampacity derating. The bundle shall be instrumented with thermocouples as shown in Figure 2, tied with wraps every 2 feet, and pulled into position in the conduit. The cables shall be connected as a single series electrical circuit, which contains all conductors in the system. The conduit is to be supported by two horizontal pieces of "H" shaped or 2" x 2" structural square tubing with a minimum of 36 inches clearance from the tray or walls of the enclosure. The attachment points between the conduit and the supporting beam are to be insulated with 1" thick mineral fiber blanket to form a thermal break similar to the tray system. Insulation (or electrically-heated tape) shall be wrapped around the cable which extends out of both ends of the conduit to allow adjustment of end temperatures. The end temperatures must be adjusted such that the average values for the thermocouples at locations 1 and 3 are within 4°C of the average for location 2, to minimize axial heat flow. In other words, the ends should be close to the same temperatures as the middle, thereby minimizing axial heat flow.

5.3.2.3 Through-Penetration Fire-stops

The electrical cable(s) and raceway(s) penetrating the sample wall section are to be representative of those specified for the through-penetration fire-stop and are to be of sufficient length to project a minimum of 24 inches beyond both sides of the wall section. For this purpose maximum thickness of fire-stop shall be measured. Thermocouples on the electrical cables in through-penetration fire-stops are to be located so that temperatures are measured in the interior of the fire-stop and at the fire-stop mid-depth as in figure 5.

5.3.2.4 Orientation

The test specimens shall be mounted and the tests run in the horizontal direction so as to eliminate any possibility of a "chimney-effect" which could cause air movement within the system.

5.3.2.5 Thermocouple Placement

Thermocouples (24 gage, Type K [Special Grade] Chromel-Alumel, accuracy ±1.15°C) shall be installed by slitting the cable insulation and jacket and placing the thermojunction in intimate physical contact with the conductor strands, as illustrated in Figure 4. The cable shall then be restored as closely as possible to its original condition, and the slit sealed with a single-layer spiral wrap of electrical tape. Since the test is evaluating the temperature at the hottest position, rather than the average of all thermocouples, the cables within the bundle have been instrumented, instead of those near the outside. For both the conduit and tray systems, thermocouples shall be placed at each of three vertical planes along their lengths, as illustrated in Figures 1 and 2. The tray system shall be instrumented with 13 thermocouples at each plane, for a total of 39 thermocouples, and the conduit system shall be monitored with 1 thermocouple at each plane, for a total of 3 thermocouples.

5.3.2.6 Installation of Passive Fire Protection Systems

The tray and/or conduit is to be lifted off it's support after the completion of the baseline test, the passive fire protective system applied in accordance with the manufacturer's instructions, and the entire assembly lowered onto the horizontal

support, thereby minimizing any heat sink effect from the support system. After installation, the passive fire protection system shall be allowed to equilibrate (or cure) to a state of constant moisture content, if applicable. Moisture content (in terms of percent moisture) shall be taken 4 hours or less before the test is begun and within 4 hours after completion of the test, using either a hand-held moisture meter, or standard 120°C oven-dry methods). Such moisture determination is to be made on the top and bottom exterior surfaces of both the tray and conduit systems at their mid-length, and the results of top and bottom averaged.

5.4 Test Procedure

5.4.1 Baseline Evaluation

At least one baseline experiment for each system (conduit and tray) using Sections 5.4.2, 5.4.4, and 5.4.5 shall be conducted to establish the cable ampacity prior to application of the fire protective system. The ampacity value measured should be compared to the IEEE-ICEA Power Cable ampacities standards.

5.4.2 Current

The circuit shall be energized with 60 Hz, single phase alternating current sufficient to reach a steady-state temperature of 90°C at the hottest single point monitored at location 2 (see Figures 1 & 2). The current values measured shall be reported to the nearest 0.1 ampere. The use of a constant-current amplifier is highly recommended as a power source, since the increasing temperatures of the conductor circuit cause resistance changes. Alternatively large variable transformers may be used, with constant readjustment to maintain a set current flow.

5.4.3 Temperature Measurement

All temperatures shall be recorded at intervals no greater than 1 minute. The current in each test circuit shall be adjusted so as to give an equilibrium temperature of 90°C±1.1°C at the hottest point monitored within location #2 (those located at the center of the system). The average temperatures of thermocouple locations #1 and #3 shall be within ±4°C of the average of thermocouple location #2. Each cable circuit shall be

considered to be in steady state condition when a three-hour period has elapsed since any perturbation of the system occurred (current adjustment, box temperature change, additional insulation placed on ends, etc.) and the rate of change of the average of all monitored conductor temperatures in that circuit does not exceed ±0.55°C for the conduit[1] and ±0.35°C for tray[1]. Re-adjustment of the current flow to a circuit in order to maintain a given amperage value is not to be considered a perturbation.

In order to statistically assure thermal equilibrium, the conductor temperatures should be averaged at each sampling period and a linear regression analysis (least-squares fit) performed on the data obtained from that and all other averages taken over the preceding 60 minute period. The slope of the line obtained will be in units of °C/hour. As soon as the absolute value of the slope of these data becomes less than 0.55 (conduit) or 0.35 (tray), equilibrium has been reached. The degrees of freedom obtained by averaging many thermocouple locations (3 for conduit, 39 for tray), allows the precision to exceed the ±1.1°C limit of any one thermocouple. The only practical method of obtaining the required accuracy in determining thermal equilibrium is through the use of computerized data retrieval.

As an example of the least-squares technique, consider the tray system in Figure 1. At each sampling time, an average temperature of thermocouples 1 through 39 will be calculated. This value will then be added to the top of an array large enough to hold 60 minutes worth of these averages, and the oldest value discarded. A linear regression fit is then performed on the array and presented on the video screen to the operator. When the next data sampling is completed, the entire process is repeated, thus yield a linear regression fit of the data from the previous 60 minutes. As each new data point is added to array, all previous ones are shifted down one time increment, until each is finally discarded due to the fixed size of the array.

[1] Chosen as the 95% confidence limits for Special Grade, Type K thermocouples at 90°C.

LINEAR REGRESSION (LEAST SQUARES METHOD) FIT:

$$Y = mX + b \qquad \overline{X} = \Sigma X/n$$

$$\overline{Y} = \Sigma Y/n$$

$$m = \frac{\Sigma XY - \frac{\Sigma X \Sigma Y}{n}}{\Sigma X^2 - \frac{(\Sigma X)^2}{n}}$$

$$b = \overline{Y} - m\overline{X}$$

Where:

Y = Average Conductor Temperature (°C)
X = Time Increment (min)
m = Slope of line (C/min)
b = Y-Axis intercept (°C)

5.4.4 Enclosure Temperature

The temperature within the test enclosure shall be controlled to 40°C ±2°C. Some induced air movement within the enclosure is necessary to achieve uniform steady-state temperatures, but care must be taken to avoid direct air currents against the test specimens. Method of ambient temperature control within the test enclosure is important and care must be taken to avoid any additional heat loading on the cables by radiation from heat source.

6. EVALUATION OF TESTS

By a simple comparison of the baseline and test specimen ampacities, a derating factor can be calculated.

Data Interpretation: Ampacity Derating Factor

The maximum current carrying capacity shall be determined by derating applied as dictated by the test. The derating factor as determined by the test is to be calculated as follows:

% Ampacity Derating Factor = $(I_0 - I_f)/ I_0 \times 100$

Where:

I_0 = Current in amperes required to attain a temperature of 90 °C for the baseline (un-protected) system. However, if I_0 is larger than published ampacity i.e. ICEA P-46-426, P-54-440 then published ampacity shall be used for I_0.

I_f = Current in amperes required to attain a temperature of 90 °C for the system as protected by the passive fire protection system.

7. DOCUMENTATION OF TESTING

Following the procedure outlined in this standard, provide percentage ampacity derating and record the following specific data.

- Description of cables and raceway, if different from specified herein.
- All thermocouple data
- All current and voltage values
- Current and conductor temperature values observed at equilibrium
- Weight of passive fire protection system (lb/ft)
- Average thickness of fire protective system (inches)
- Details of installation of fire protective system

The documentation of records shall be provided in the form of a FINAL REPORT. The report shall contain for permanent record all information pertaining to the test including the Test Plan, laboratory notebook, all raw data, interpretations, and observations. The report shall provide the documentation of all the above parameters and evidence of calibration to NIST standards for equipment used in obtaining this data (including before and after calibration of thermocouples), and appropriate resolution of any test anomalies. All calculations, conclusions or interpretations shall have been checked and approved by authorized individuals certified by the testing organization to be knowledgeable of the techniques used.

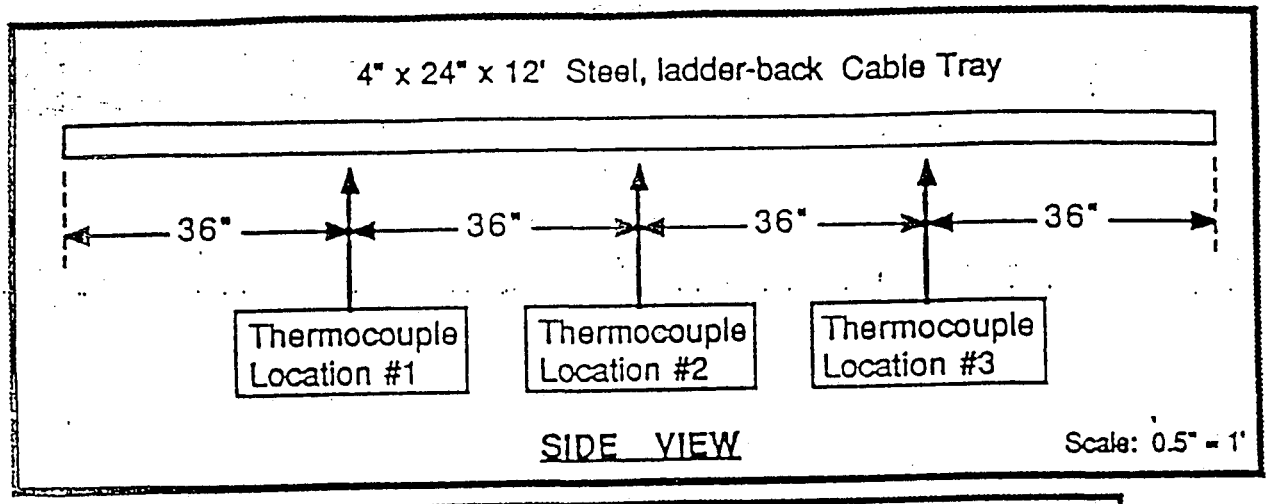

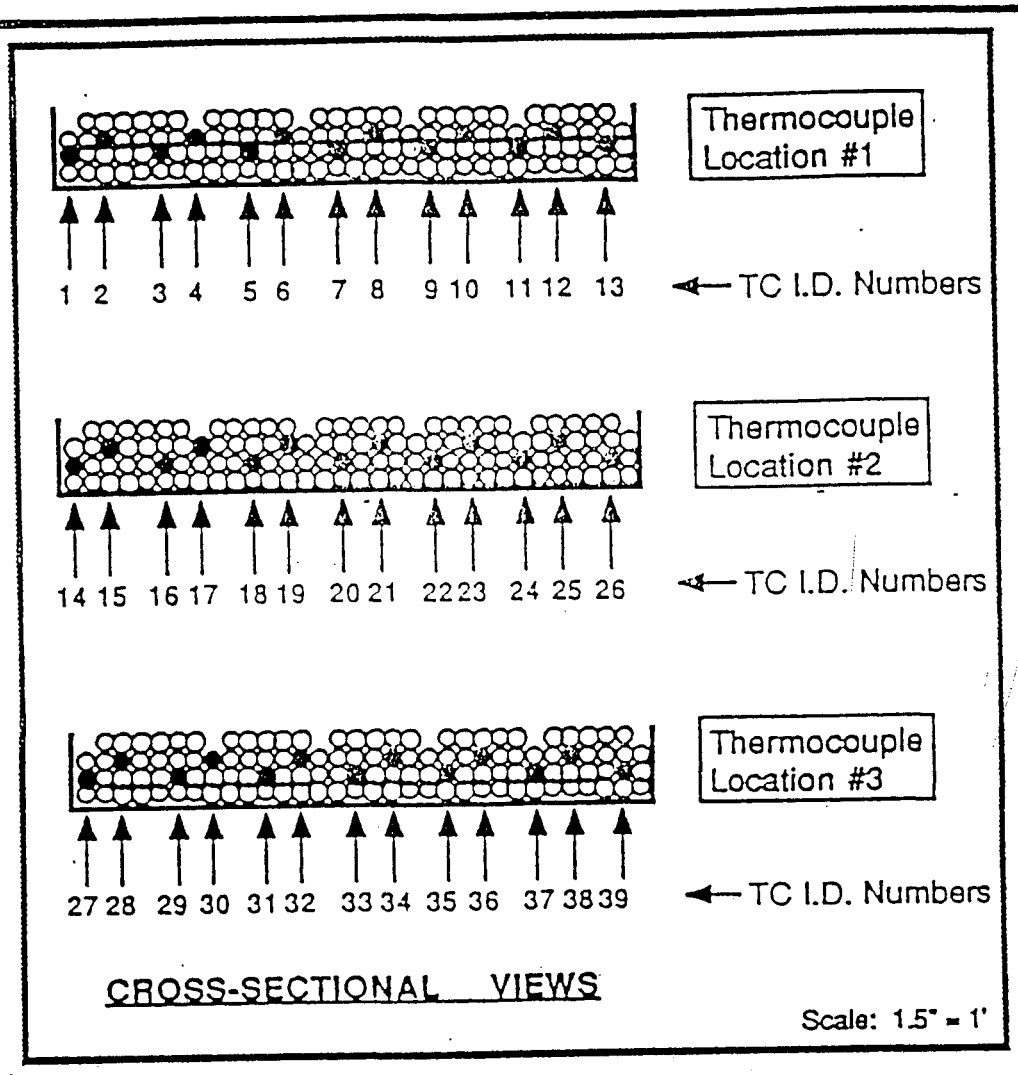

NOTE: Cable tray is to be 100% visual-fill with 3 Conductor #6 AWG Cable. Number of cables = 122. Cable diameter = 0.75 inch.

TRAY AMPACITY DESIGN

Figure 1

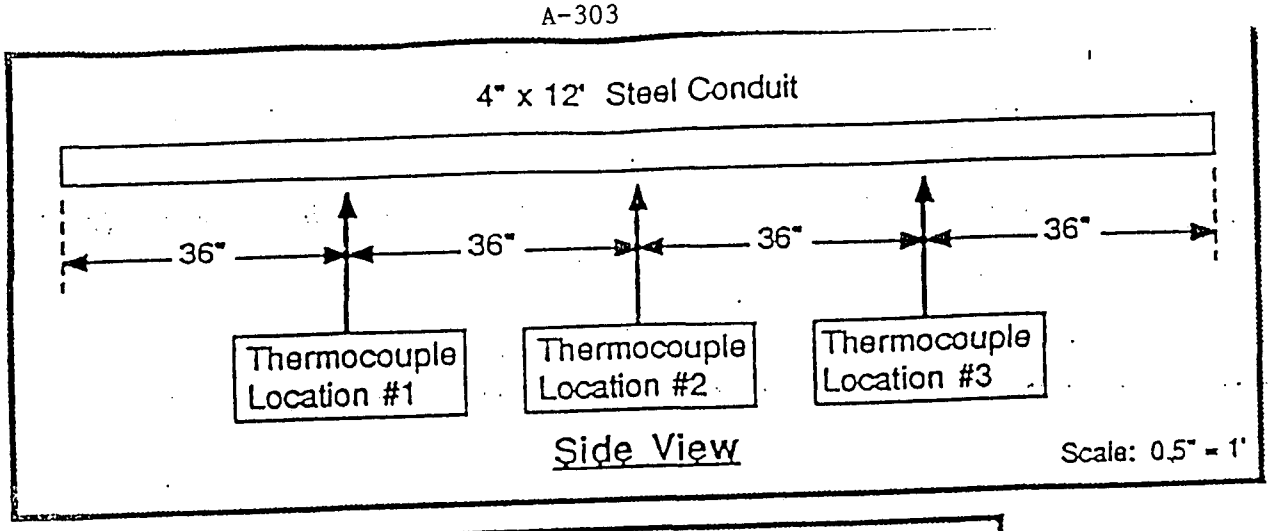

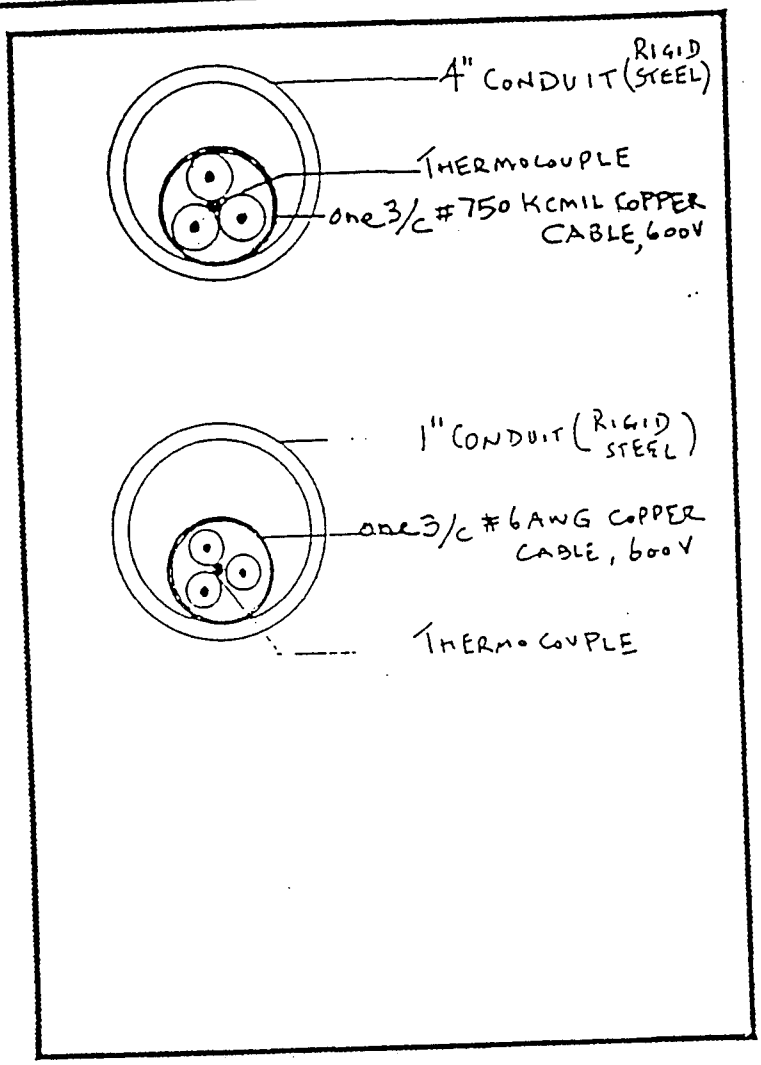

CONDUIT AMPACITY DESIGN

Figure 2

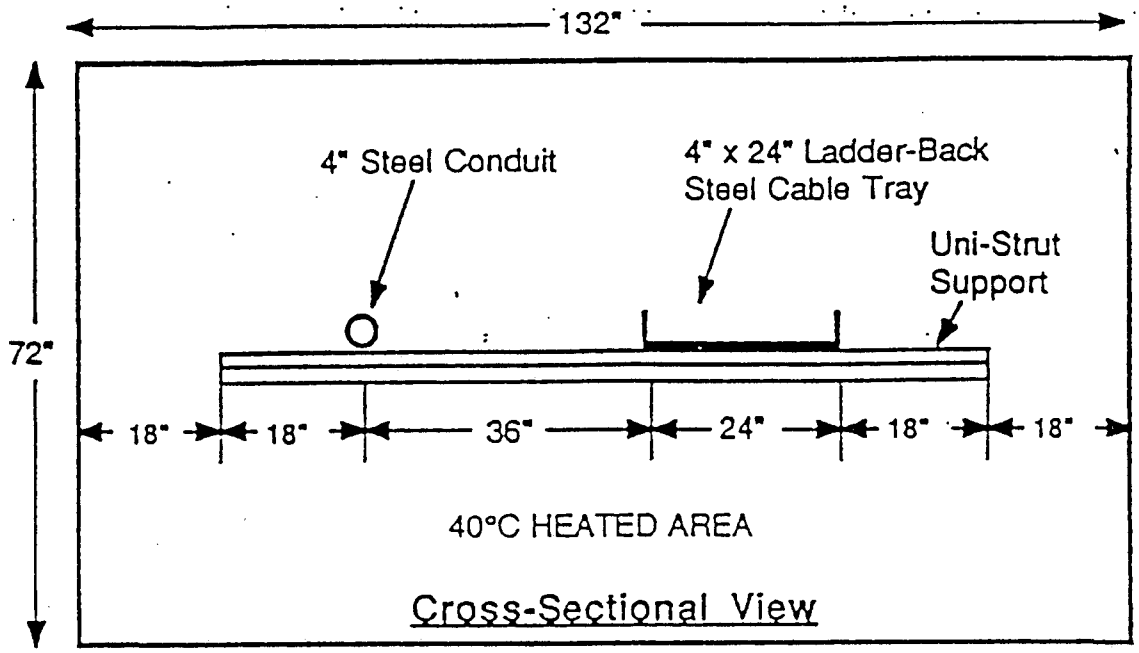

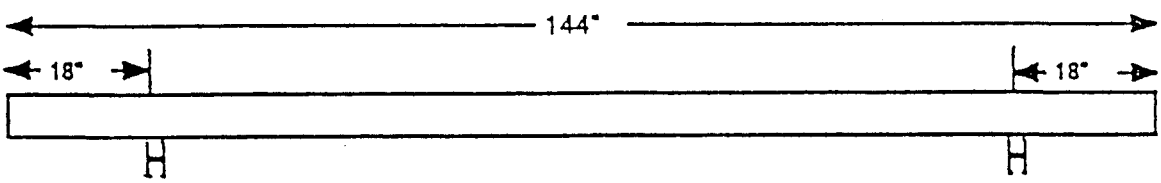

Conduit & Tray Support Points

CONDUIT AND TRAY AMPACITY DESIGN

Figure 3

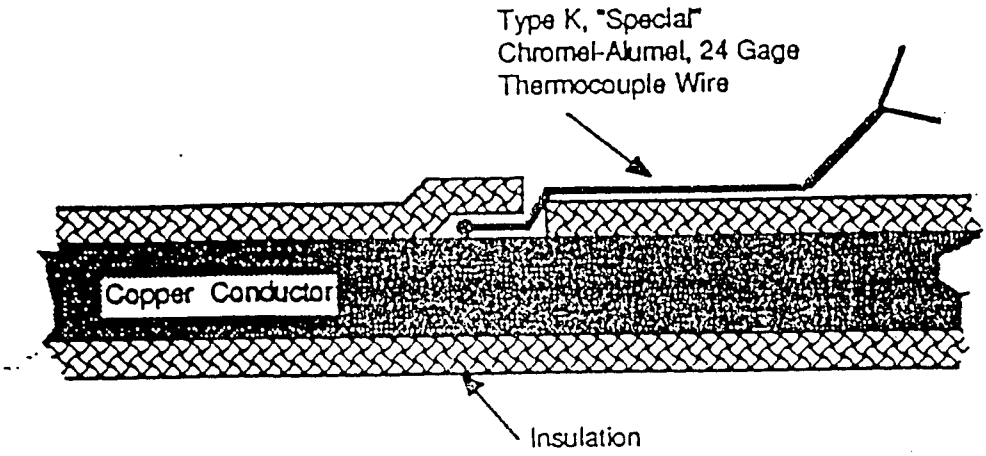

NOTE:

To attach thermo-junction to copper conductor, make an approximately 2 inch long slit in the outer wrap, expose the three conductors, locate the conductor to be instrumented, make a 1 inch slit in the insulation and insert the thermocouple junction in contact with the strands. Close the slit, reposition the wouter wrap and seal with a spiral wind of a single layer of glass-reinforced electrical tape.

Figure 4

P 848/D12 February 24, 1993

IEEE STANDARD

PROCEDURE FOR THE DETERMINATION OF THE

AMPACITY DERATING OF FIRE PROTECTED CABLES

Sponsor

Insulated Conductors Committee of the

IEEE Power Engineering Society

Prepared by Task Force 12-45 of
Test and Measurements Subcommittee No. 12 of
Insulated Conductors Committee

Copyright 1993 by the Institute of Electrical and Electronics
Engineers, Inc.
345 East 47th Street
New York, NY 10017, USA
All rights reserved.

This is an unapproved draft of the proposed IEEE Standard, subject to change. Permission is hereby granted for IEEE Standards Committee participants to reproduce this document for purposes of IEEE standardization activities. Permission is also granted for member bodies and technical committees of ISO and IEC to reproduce this document for purposes of developing a national position. Other entities seeking permission to reproduce this document for standardization or other activities, or to reproduce portions of this document for these or other uses, must contact the IEEE Standards Department for the appropriate license. Use of information contained in this unapproved draft is at your own risk.

IEEE Standards Department
Copyright and Permissions
445 Hoes Lane, P.O. Box 1331
Piscataway, NJ 08855-1331, USA

Foreword

(This Foreword is not a part of IEEE Std. P 848/D12, IEEE Standard - Procedure for the Determination of the Ampacity Derating of Fire Protected Cables)

Many cable installations in nuclear and fossil fuel generating stations require the installation of fire stop, fire protective materials, coating, and electrical separation wrap materials over the cables or the raceway for fire protection or electrical separation purposes. 10CFR50 Appendix R for nuclear plants may require some electrical circuits enclosed in a fire protective material. IEEE 634-1976 specifies requirements for cable penetration fire stops at fire rated walls and floors. Compliance with IEEE 384-1992 may require installation of a wrap material over free air-drop cables or solid covers on cable trays.

Building codes for commercial and industrial facilities in some states require power cables, used in emergency power systems, to remain functional during a fire exposure. This may also necessitate the use of the fire protective material.

As discussed in IEEE 422 and IEEE 690, utility generating stations use cable ampacities provided in ICEA P-46-426 for conduits, spaced cable tray installations and duct bank installations. ICEA P-54-440 is used for cable installation in random filled open-top trays. Commercial, industrial and non-utility owned generating stations utilize cable ampacities published in NFPA-70 (National Electric Code). The National Electric Code permits the use of ICEA P-46-426 and ICEA P-54-440 under the direction of engineers

Fire-protection related products may reduce the heat transfer characteristics associated with the ampacities provided in ICEA P-46-426 and ICEA P-54-440. In future revisions, these ampacity standards may incorporate these new installation conditions on cable ampacity. Not all products, however, may be covered by changes in the ampacity standards due to their limited use to the generating station market. Hence, ampacity testing to determine ampacity derating of fire protected cable systems is necessary.

Several analytical cable ampacity methods are listed in the bibliography to address fire stops, tray enclosure materials, and cable wrap material. The user may consider the applications of these analytical methods to avoid testing of minor differences in the installation of a given product.

Copyright © 1993 IEEE. All rights reserved
This is an unapproved IEEE Standards Draft, subject to change

This standard was prepared by the Task Group on Procedure for the Determination of the Ampacity Derating of Fire Protected Cables, Subcommittee on Tests and Measurements, Insulated Conductors Committee. The membership of the working group during the preparation of this draft was:

A.K. Gwal, Chair
J.L.White, Vice Chair

T.J. Al-Hussaini
P.Bhatia
K.Brown
E.A.Capouch
E.J.Coffey
E.J.D'Aquanno
J.Daly
P.A.Giaccaglia
A.Hiranandani
A.E.Kollar
R.Licht
J.E.Merando
K.A.Petty
K.W.Prier
D.N.Priest
P.D.Skelly
M.Spurlock
W.Torok
F.W.Van Nest
J.G. Waligorski

Copyright © 1993 IEEE. All rights reserved
This is an unapproved IEEE Standards Draft, subject to change

TABLE OF CONTENTS

Section		Page
1	Overview	7
	1.1 Purpose.	7
	1.2 Scope.	7
2	References	8
3	Definitions	9
4	Test Description	9
	4.1 General	9
	4.1.1 Applicability	9
	4.1.2 Method of Testing	10
	4.2 Test Specimens - Protected Cable Systems	10
	4.2.1 Cable Selection	10
	4.2.2 Cable Fill	10
	4.2.3 Conduit	10
	4.2.4 Tray	11
	4.2.5 Free-Air Drop	11
	4.2.6 Fire Protective Material	11
	4.3 Test Specimens - Cable Penetration Fire Stop	11
	4.3.1 Cable Selection	11
	4.3.2 Cable Fill	12
	4.3.3 Conduit	12
	4.3.4 Tray	12
	4.3.5 Floor/Wall Assembly	12
	4.3.6 Fire Stop Design	12
	4.4 Test Facility	13
	4.4.1 Test Enclosure	13
	4.4.2 Test Specimen Installation	13
	4.4.2.1 Tray	13
	4.4.2.2 Conduit	13
	4.4.2.3 Free-Air Drop	13
	4.4.2.4 Cable Penetration Fire Stops	14
	4.4.2.5 Orientation	14
	4.4.2.6 Installation of Fire Protective Systems	14
	4.4.3 Thermocouple Selection and Placement	14
	4.5 Test Procedure	15
	4.5.1 Baseline Evaluation	15

Copyright © 1993 IEEE. All rights reserved
This is an unapproved IEEE Standards Draft, subject to change

4.5.2 Current Source 15
4.5.3 Temperature Measurement 15
4.5.4 Enclosure Temperature 17

5 Evaluation of Test Results 23

5.1 Normalizing Test Results 23

5.2 Ampacity Derating Factor 23

6 Documentation of Testing 24

7 Bibliography 25

Copyright © 1993 IEEE. All rights reserved
This is an unapproved IEEE Standards Draft, subject to change

TABLE OF CONTENTS (cont)

Section | Page

FIGURES

FIG 4-1 Tray Configuration - Protective Cable System 18
FIG 4-2 Conduit and Free-Air Drop Configurations - Protective Cable System 19
FIG 4-3 Configuration- Cable Penetration Fire Stop 20
FIG 4-4 Enclosure and Support Requirements 21
FIG 4-5 Thermocouple Attachment to Conductor 22

Copyright © 1993 IEEE. All rights reserved
This is an unapproved IEEE Standards Draft, subject to change

1 Overview

1.1 **Purpose.** The purpose of this standard is to provide a test procedure for use in establishing the ampacity or ampacity derating factor for cables installed in fire protected conduits, trays, or free air-drops, cable penetration fire stops, or electrical separation wrap systems.

1.2 **Scope.** This standard provides a detailed test procedure for determining the ampacity or derating factor in the following cable installation configurations:

(1) Block-out or sleeve type cable penetration fire stops.

(2) Conduits covered with a protective material.

(3) Tray covered with a protective material.

(4) Tray directly covered or coated with a fire-retardant material.

(5) Free-air drops enclosed with a protective material.

The standard is applicable to cables installed and sized to ICEA P-46-426 for conduits and free air drops, and ICEA P-54-440 for cable tray. ICEA P-46-426 does provide ampacities for cables in a tray with a fixed spacing and may be used for cable penetration fire stop configurations only.

This standard does not endorse the use of or provide application guidance for the installation of cable penetration fire stops and fire protective materials. Cable designs are available which can withstand and remain functional during direct exposure to a fire. The user should refer to IEEE 634 for the qualification requirements of cable penetration fire stops.

Copyright © 1993 IEEE. All rights reserved
This is an unapproved IEEE Standards Draft, subject to change

2 References

ANSI-IEEE Std 100-1990, Standard Dictionary of Electrical and Electronics Terms 4th Edition.

Cross-Linked Thermosetting Polyethylene-Insulated Wire and Cable for the Transmission and Distribution of Electrical Energy. Washington, D.C.: National Electrical Manufacturers Association, 1990. ICEA S-66-524 (NEMA WC 7-1988).

Ethylene Propylene Rubber-Insulated Wire and Cable for the Transmission and Distribution of Electrical Energy. Washington, D.C.: National Electrical Manufacturers Association, 1989. ICEA S-68-516 (NEMA WC 8-1988).

ICEA Standard for Power Cable Ampacities. Washington, D.C.: National Electrical Manufacturers Association, 1962. Reprinted by IEEE under S-135. ICEA P-46-426.

ICEA Standard for Ampacities - Cables in Open-Top Cable Trays. Washington, D.C.: National Electrical Manufacturers Association, 1991; NEMA WC-51. ICEA P-54-440.

IEEE Std. 384-1992, IEEE Standard Criteria for Independence of Class 1E Equipment and Circuits.

IEEE Std. 422-1986, IEEE Guide for the Design and Installation of Cable Systems in Power Generating Stations.

IEEE Std. 690-1984, IEEE Standard for the Design and Installation of Cable Systems for Class IE Circuits in Nuclear Power Generating Stations.

IEEE Std. 634-1978, IEEE Standard Cable Penetration Fire Stop Qualification Test.

Rubber-Insulated Wire and Cable for the Transmission and Distribution of Electrical Energy. Washington, D.C.: National Electrical Manufacturers Association, 1980. ICEA S-19-81 (NEMA WC 3-1980).

The National Electric Code, National Fire Protection Association, NFPA 70-1990, Quincy, MA.

Copyright © 1993 IEEE. All rights reserved
This is an unapproved IEEE Standards Draft, subject to change

3 Definitions

3.1 ampacity derating factor: A numeric value representing the fractional reduction from a base ampacity cable rating. Ampacity derating factors are associated with specific installation conditions not presently addressed in the base ampacity.

3.2 ampacity correction factor: A numeric value equal to one minus the ampacity derating factor.

3.3 cable penetration fire stop: Material, devices or an assembly of parts providing ;cable penetrations through fire-rated walls, floors, floor-ceiling assemblies, and maintaining required fire rating.

3.4 cable tray: A raceway resembling a ladder and usually constructed of metal. Other styles of trays include solid-bottom, and channel type.

3.5 fire protected cable systems: Cable systems to which a fire protective enclosure material has been applied either in direct contact with the cables or applied over the raceway to protect cables from fire.

3.6 fire retardant coatings: Material applied along the length of cables or in localized areas, as deemed necessary, to retard the flame propagation properties of cables in trays.

3.7 raceway: Any channel that is designed and used expressly for supporting or enclosing wires, cable or bus bars. Raceways consist primarily of, but are not restricted to, cable trays and conduit.

4 Test Description

4.1 General

4.1.1 Applicability This method shall apply to cables manufactured in accordance with either ICEA S-66-524, ICEA S-19-81, or ICEA S-68-516 and rated either 600, 2 000, 5 000, 8 000, or 15 000 V. This test is limited to cables installed in the following configurations:

(1) Tray with a fire protected cable system where cables are arranged consistent with ICEA P-54-440.

Copyright © 1993 IEEE. All rights reserved
This is an unapproved IEEE Standards Draft, subject to change

(2) Conduit or free air drop with a fire or electrical separation protected cable system.

(3) Block-out, conduit or sleeve type penetration type fire stop.

4.1.2 **Method of Testing** Cable ampacity or ampacity derating factor shall be established by testing in accordance with the configurations shown in Figures 4-1, 4-2, and 4-3. Test results may also be used to confirm analytical heat transfer models.

4.2 Test Specimens - Protected Cable Systems

4.2.1 **Cable Selection** The cables used in the ampacity tests shall have copper conductor(s), 600 V rated cross-linked polyethylene or ethylene-propylene rubber insulation and a chlorosulfonated polyethylene jacket. Depending on the specific test (as outlined below) the cables shall be rated 600 V and of either 3/C No.6 AWG, 3- 1/C 750 kcmil construction. If a user opts to test using conduits sizes other than 1 and 4 inch (see section 4.2.3) then a 3/C, triplex or 3-1/C cable shall be chosen to achieve the maximum allowable fill. When 1/C cables are used for conduit or free air drops, they shall be tie wrapped at intervals not to exceed 2 feet.

4.2.2 **Cable Fill** The ampacity of a protected cable system is dependent on a number of factors, including: the actual cable depth in a tray, the number of conductors in a conduit and free air-drop, and the conductor size of the cables. The ampacity derating factor of the barrier/wrap systems, however, is not dependent on the these conditions. In order to avoid introducing other types of derating factors, e.g. multiple conductors in a conduit or close conduit grouping factors, the following cable fill conditions shall be used.

(1) Random filled tray: Three layers of 3/C No.6 AWG cables, 0.75 inch diameter, 32 cables per layer, resulting in a depth of 2.25 inches for the 24 inch wide tray.

(2) Conduit: Single circuit of three conductors sized to match the conduit in accordance with NFPA-70 or the largest commercially available size, not to exceed 750 kcmil, generally used in conduits. (See Section 4.2.1)

(3) Free-Air Drop: Fill requirements do not apply.

4.2.3 **Conduit** Conduit ampacity tests shall utilize 1 and 4 inch rigid steel conduits. Tests conducted using these two sizes shall be considered representative of all sizes provided that the fire protective system installation methods and configurations are consistent across the entire size range. Where the installation methods, configurations, or fit differ according to conduit size the user shall test sizes to bound the

Copyright © 1993 IEEE. All rights reserved
This is an unapproved IEEE Standards Draft, subject to change

specific application. Conduits shall be a minimum of 12 ft long. The conduit shall be isolated from its supporting structure by wooden blocks.

In addition to the conduit, the junction boxes and pull boxes may also be enclosed with a protective material. Since the surface area of the boxes is significantly greater than the conduit, heat transfer is improved proportionally. Therefore, junction boxes and pull boxes do not need to be included in the ampacity test.

4.2.4 **Tray** A commercially available 4 inch deep - 24 inch wide ladder-back style steel cable tray, a minimum of 12 ft long shall be used. The tray shall be isolated from the support by wooden blocks.

4.2.5 **Free-Air Drop** Ampacity tests shall be conducted on free air drop configurations consisting of 1-3/C No.6 AWG and 3-1/C 750 kcmil, respectively. Tests conducted using these two sizes shall be considered representative of all sizes provided that the fire protective system installation methods and configurations are consistent across the entire size range. Where the installation methods, configurations, or fit differ according to size the user shall test sizes to bound the specific application. Free air drops shall be a minimum of 12 ft long. The test specimen shall be supported to prevent sagging and shall be isolated from its supporting structure by wooden blocks.

4.2.6 **Fire Protective Material** The protective material shall be representative of the installed product at maximum thickness. If the product is typically applied in a non-uniform manner, e.g. overlap joint when product is butted, then these sections shall be included in the test.

Some fire-protected cable systems utilize an end seal where the barrier or wrap ends in order to prevent the intrusion of hot gases or fire into the end of the tray or conduit. If end seal is less than six inches, then the seal may be excluded from the test. Otherwise, the end seal should be treated and tested in a similar manner to cable fire stop, except the wall section is excluded.

4.3 Test Specimens - Cable Penetration Fire Stop

4.3.1 **Cable Selection** The ampacity of the cable in a cable penetration fire stop varies with cable conductor size, conductor material, and manner of cable installation outside the fire stop. Tests conducted using a 600 V 3/C No. 12 AWG, aluminum conductor with cross-linked polyethylene insulation and an overall chlorosulfonated polyethylene jacket shall be considered representative of other voltage ratings, conductor sizes and copper or aluminum conductors installed in random filled tray. Tests on single conductor 2/0 AWG aluminum conductor 600 V, with cross-linked polyethylene insulation and a chlorosulfonated polyethylene jacket shall be considered to be representative of cables installed in trays with maintained spacing. Tests performed using copper

Copyright © 1993 IEEE. All rights reserved
This is an unapproved IEEE Standards Draft, subject to change

conductor cables may be used only to establish the derating factors for applications using copper conductor.

In cable bus applications, where larger conductor sizes are generally used, cable specimen shall be the smallest conductor in the anticipated use range. Aluminum conductor material shall be used, unless design is limited to copper conductors.

4.3.2 Cable Fill The tray shall be filled to a one inch depth. The corresponding current in ICEA P-54-440 shall be applied.

Ampacity tests on fire stops installed in trays with maintained spacing (per ICEA P-46-426) shall be conducted on a single layer of 2/0 cables separated by one diameter.

Plant specific design conditions may be tested. However, the results may not be extrapolated to lower percentage filled cable trays.

Conduit fill shall be identical to that specified in Section 4.2.2.

4.3.3 Conduit The conduit specimen shall be identical to that used in section 4.2.3., except that the length of the conduit shall be twenty feet. No fire protective material shall be applied to the conduit other than the fire stop.

4.3.4 Tray Tray specimen shall be identical to that used in section 4.2.4, except the length of the tray shall be twenty feet plus the width of the wall. No fire protective material shall be applied to the tray other than the fire stop.

4.3.5 Floor/Wall Assemblies The type of floor/wall construction and thickness affect the ampacity derating of the system. Thicker floors/walls shall be representative of thinner floors/walls of the same construction. Floors/walls constructed of lower thermal conductive materials shall be representative of floors/walls of higher thermal conductive materials.

The floor/wall assembly must maintain a minimum of 24 inches from its outer edge to the edge of the blockout.

For floor assemblies, the raceways may contain 90 degree bends located at a minimum of 24 inches from each surface of the floor assembly.

4.3.6 Fire Stop Design The fire stop configuration to be ampacity tested shall be representative of the maximum permitted installation tolerances, in contrast to fire tests which are typically conducted on fire stops at the minimum tolerance.

4.4 Test Facility

Copyright © 1993 IEEE. All rights reserved
This is an unapproved IEEE Standards Draft, subject to change

4.4.1 Test Enclosure The ampacity test shall be conducted in an enclosure as shown in figure 4-4, such that the temperature around the specimen shall be controlled to 40°C +/- 2°C. The enclosure shall ensure an even temperature and shall limit drafts on the test specimen. The temperature inside the enclosure shall be measured at no less than three places one foot from the specimen, and in the horizontal plane of the test specimen. The temperature of the enclosure shall be taken as the average of the steady state measurements.

4.4.2 Test Specimen Installation

4.4.2.1 Tray The tray is to be uniformly loaded with a single type of cable. The cables shall be installed in an orderly, symmetric manner, so as to limit the flow of air through the cables and to ensure repeatability. Cable tie wraps shall not be used within the tray.

The cables shall be connected as a single series electrical circuit.

When testing the protected cable systems, a section of insulating blanket shall be placed at the ends of the tray to minimize axial heat flow, such that the average values for the thermocouples at locations 1 and 3 (see Figure 4-1) are within +/- 4°C of the average value for location 2.

4.4.2.2 Conduit The cables shall be pulled into the conduit after installation of the thermocouples. No pulling lubricant shall be used. When three single conductor cables are utilized for the conduit tests, the cables shall be bundled with stainless steel tie wraps or glass cloth electrical tape to ensure thermocouple placement is maintained during insertion or removal.

The cables shall be connected as a single series electrical circuit.

A section of insulating blanket shall be placed at the ends of the conduit to minimize axial heat flow, such that the average values for the thermocouples at locations 1 and 3 (see Figure 4-2) are within +/- 4°C of the average for location 2.

4.4.2.3 Free-Air Drop The cables shall be connected as a single series electrical circuit. When three single conductor cables are utilized for these tests, the cables shall be bundled with stainless steel tie wraps or glass cloth electrical tape to ensure thermocouple placement is maintained.

A section of insulating blanket shall be placed at ends of the free air-drop to minimize axial heat flow, such that the average values for the thermocouples at locations 1 and 3 (see Figure 4-2) are within +/- 4°C of the average for location 2.

Copyright © 1993 IEEE. All rights reserved
This is an unapproved IEEE Standards Draft, subject to change

4.4.2.4 Cable Penetration Fire Stop The cables and raceway penetrating the fire stop floor/wall shall be installed in an identical fashion as during fire testing. This may include special spacing requirements. If the fire stop design permits installation of the cables on the tray rungs or directly on the blockout surface, the bounding condition is considered to be with the cables placed on the tray rungs.

4.4.2.5 Orientation The fire protected raceway test specimens shall be mounted horizontally in order to model worst case orientation and to prevent a "chimney-effect." In the case of fire stop tests, open ends of enclosed raceways must be sealed to eliminate air movement.

4.4.2.6 Installation of Fire Protective Systems The tray and conduit is to be raised off its support after completion of the baseline tests. The protective system shall then be applied in accordance with the method established in the fire or electrical separation testing. The entire assembly shall be lowered back onto the supports while ensuring the assembly is not cracked or otherwise distorted. If the protective system can be removed without disturbing the cables or thermocouple placement, then the baseline tests may be performed before or after testing the protective cable system.

If the product undergoes a curing operation, the test specimen's dry state shall be established by the manufacturer and achieved prior to the test through natural or artificial drying.

If the product is reactive at temperatures below 90°C, then the equilibrium time must be extended based on specific analysis.

4.4.3 Thermocouple Selection and Placement Thermocouples shall be a maximum of 24 AWG, Type T special grade - Copper Constantan with an accuracy of +/- 0.5°C or other thermocouple types which have been calibrated to the same level of accuracy. Thermocouple wire shall have waterproof insulation. Thermocouples shall be placed directly against the conductor.

To attach the thermojunction to the cable, make an approximately 2 inch long slit in the outer jacket of the cable, to expose the insulated conductors. Make a one inch slit in the insulation as shown in Figure 4-5. Insert the thermocouple junction in direct contact with the conductor strands. For three conductor cables, close the insulation slit and seal with a single layer of glass-reinforced electrical tape. For single and three conductor cables, reposition the outer jacket and seal with a single layer of glass-reinforced electrical tape.

The test is intended to identify the temperature of the hottest conductor within the center of the protected cable system and cable penetration fire stop. A set of thermocouples shall be installed at each of the vertical

Copyright © 1993 IEEE. All rights reserved
This is an unapproved IEEE Standards Draft, subject to change

planes along the length of the cable as shown in Figures 4-1, 4-2, and 4-3. Conduit and free-air drops shall have the thermocouples placed on all three conductors. Within the tray assembly, thermocouple leads shall remain in the layer in which they are installed and be routed out the end of the tray in the interstices of the cable mass. For fire protected raceways, the following number of thermocouples shall be placed in each vertical plane:

(1) tray configuration - 5

(2) conduit and free-air drop - 3

For ampacity tests of tray penetration fire stops, 5 thermocouples shall be placed on the conductors in the fire stop in accordance with Figure 4-1. One additional thermocouple shall be placed at 2 foot intervals on one conductor of the center cable in the middle layer on each side of the firestop. (Figure 4-3)

For ampacity tests of conduit or free-air drop penetration fire stops, 3 thermocouples shall be placed on the conductors in the fire stop in accordance with Figure 4-2. One additional thermocouple shall be placed at 2 foot intervals on each side of the fire stop.

4.5 Test Procedure

4.5.1 Baseline Evaluation At least one baseline test for each system, i.e. tray, conduit, free air drop, shall be conducted in order to establish baseline ampacities. Baseline evaluation for a tray assembly must be performed on the same physical specimen used for the derating test. Baseline and derating evaluations for conduits and free-air drops shall be performed using the same instrumented cable set.

4.5.2 Current Source The circuit shall be energized with a 60 Hz, single phase source sufficient to cause the conductor to reach 90°C at location 2 in Figures 4-1, 4-2, and location 1 in Figure 4-3. The current shall be measured to an accuracy of +/- 0.5%. The use of a constant-current amplifier is recommended since the increasing temperature changes the circuit load, i.e. conductor resistance. Alternatively, process control devices can be used to generate and maintain the current source.

4.5.3 Temperature Measurement All temperatures shall be recorded at intervals no greater than one minute. The current in each test circuit shall be adjusted to achieve a hot spot conductor temperature of 90°C +/- 1°C at location 2 for the protected cable systems and location 1 for cable penetration fire stop. The average temperature of thermocouple locations 1 and 3 for the protected cable systems shall be within +/- 4°C of the average temperature reading at location 2. No restrictions are placed on the temperature readings at locations outside the cable penetration fire stop.

Copyright © 1993 IEEE. All rights reserved
This is an unapproved IEEE Standards Draft, subject to change

The cable circuit is considered to be have reached steady state condition when:

(1) A minimum of three hours since the last adjustment of current level or perturbation of the system occurred, and

(2) The rate of change of the average of thermocouple reading at hottest spot (location 2 for Figures 4-1 and 4-2, and location 1 for Figure 4-3) does not exceed +/- 0.2°C per hour for conduit, tray, and free-air drop.

Perturbation of the system conditions includes current adjustment, change in the internal temperature of the enclosure, and addition or removal of insulation on the ends of the tray, conduit or free-air drop. Minor adjustment of current ($\leq$ 0.5%) required to keep the current constant is not considered a perturbation of the system.

In order to statistically assure thermal equilibrium, the conductor temperatures shall be averaged at each sampling period. A linear regression analysis using the least-squares method shall be performed on the data obtained over the preceding 60 minute period. The slope of the line shall be expressed in units of °C per hour. When the absolute value of the slope becomes less than 0.2, equilibrium has been reached.

The degrees of freedom obtained by averaging many thermocouple locations, allows the precision to exceed the +/- C limit of any one thermocouple.

The equations for a linear regression using the least squares fit method are shown below:

$$Y = mX + b \tag{1}$$

$$X = \sum \frac{X}{n} \tag{2}$$

$$Y = \sum \frac{Y}{n} \tag{3}$$

$$m = \frac{\sum XY - \frac{\sum X \sum Y}{n}}{\sum X^2 - \frac{(\sum X)^2}{n}} \tag{4}$$

Copyright © 1993 IEEE. All rights reserved
This is an unapproved IEEE Standards Draft, subject to change

$$b = Y - m X \tag{5}$$

Where:

Y	is the average conductor temperature C
X	is the time increment (min)
m	is the slope of line (C/min)
b	is the Y-axis intercept, C

4.5.4 Enclosure Temperature The temperature within the test enclosure shall be controlled to 40 +/- 2 C. Some induced air movement within the enclosure is necessary to achieve uniform steady-state temperatures. Care must be taken to avoid direct air currents against the test specimens. The method of ambient temperature control within the test enclosure is important. Care must be taken to avoid any additional heat loading on the cables by radiation from a heat source.

Copyright © 1993 IEEE. All rights reserved
This is an unapproved IEEE Standards Draft, subject to change

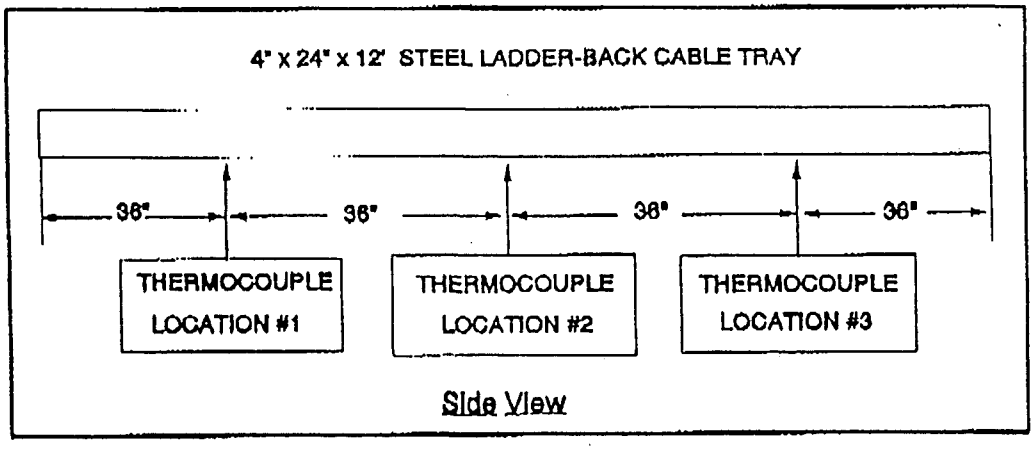

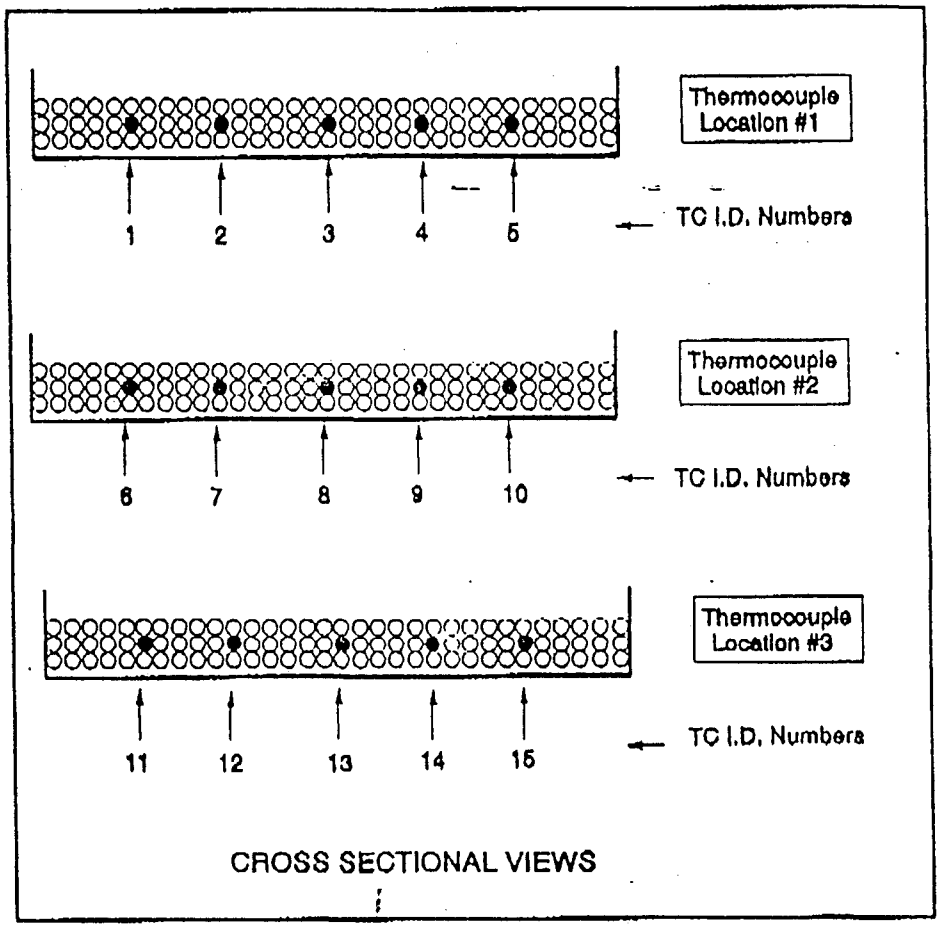

FIG 4-1
Tray Configuration - Protective Cable System

Copyright © 1993 IEEE. All rights reserved
This is an unapproved IEEE Standards Draft, subject to change

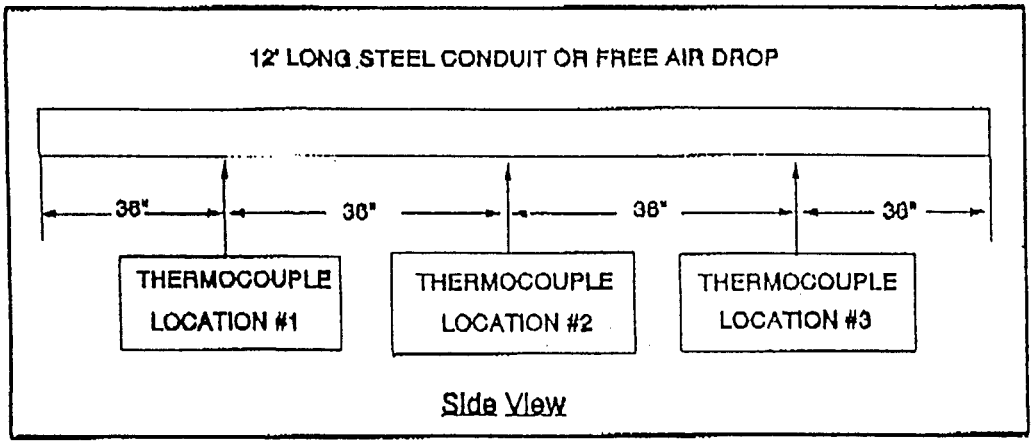

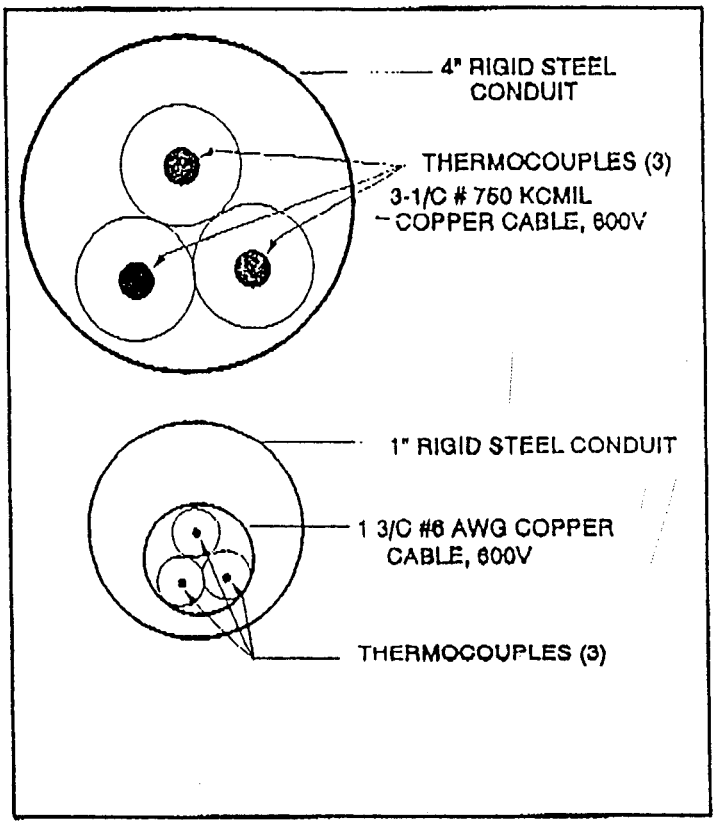

FIG 4-2
Conduit and Free-Air Drop Configurations
- Protective Cable System

Copyright © 1993 IEEE. All rights reserved
This is an unapproved IEEE Standards Draft, subject to change

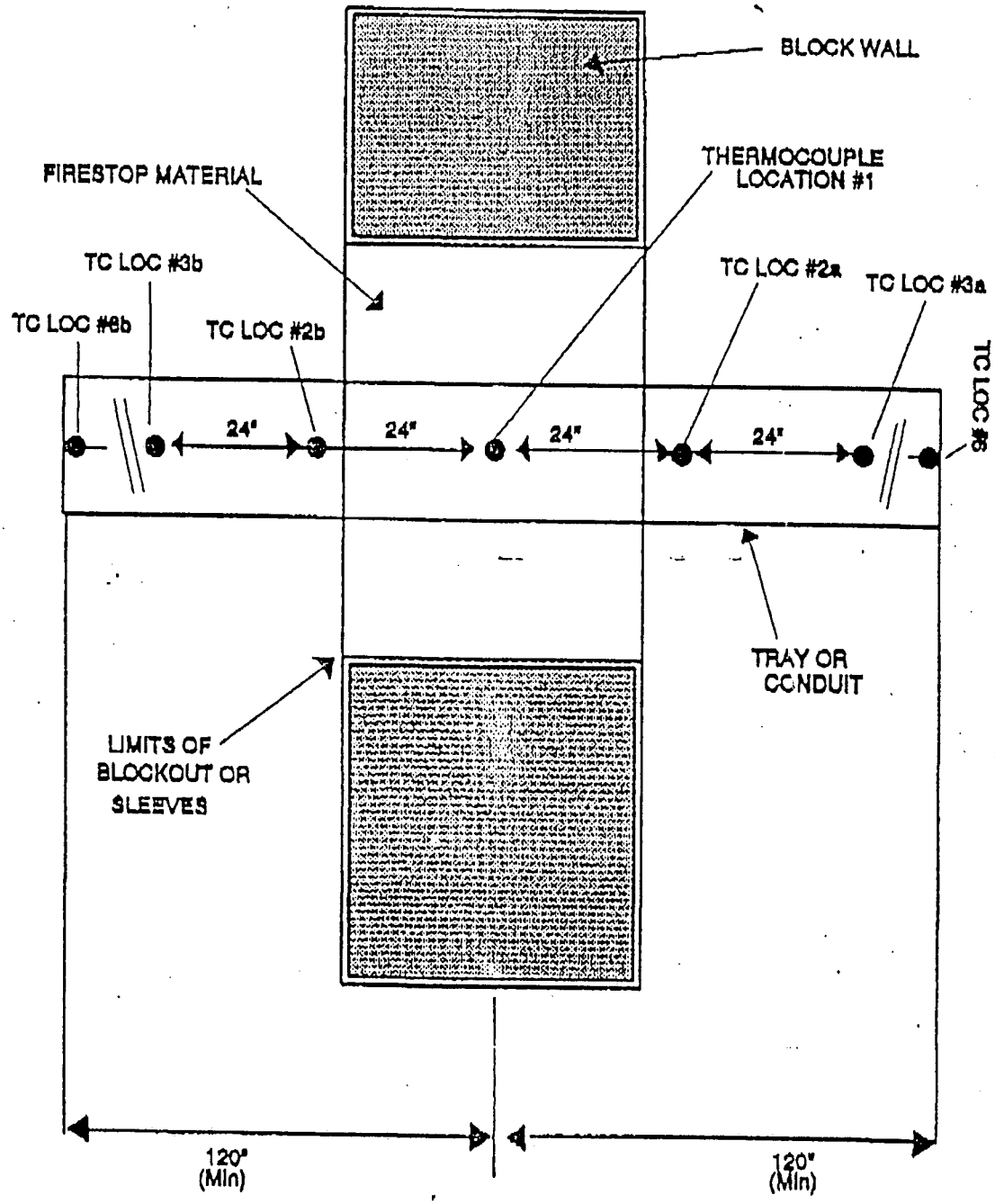

FIG 4-3
Configuration- Cable Penetration Fire Stop

Copyright © 1993 IEEE. All rights reserved
This is an unapproved IEEE Standards Draft, subject to change

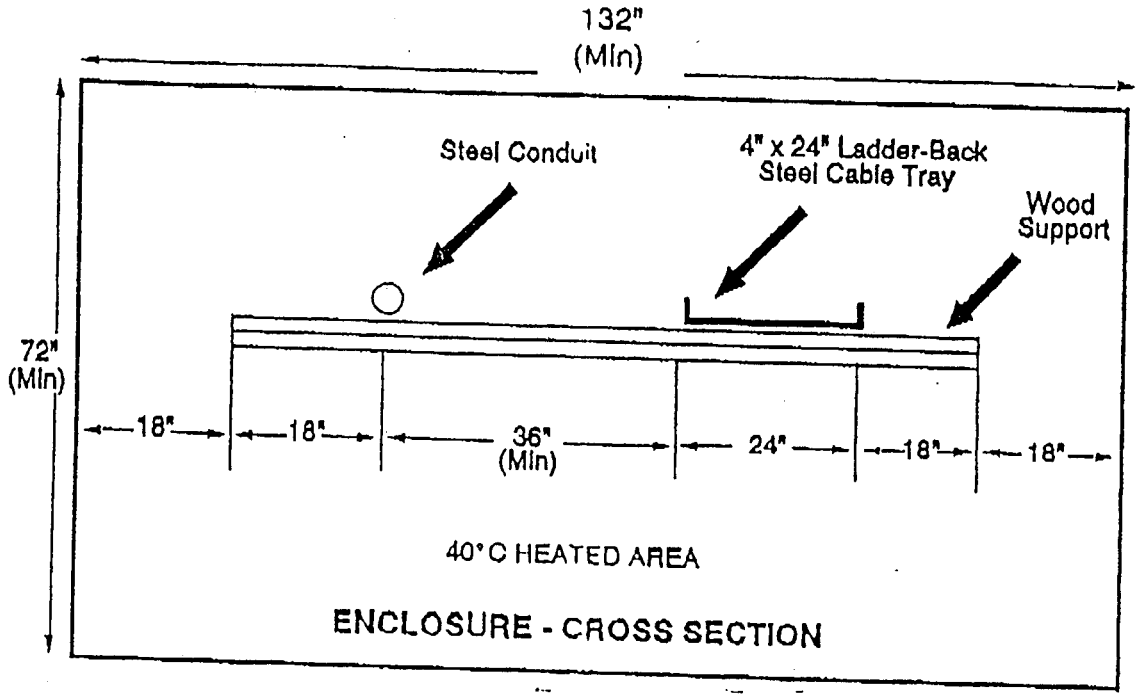

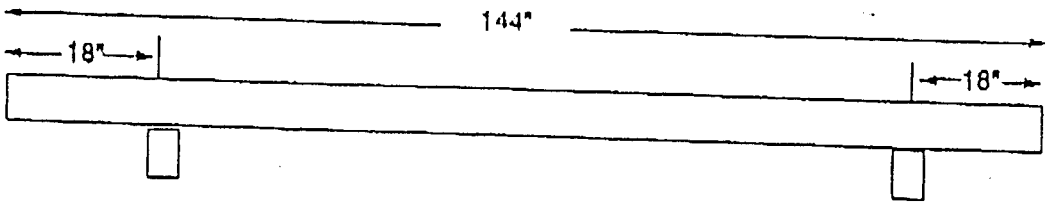

CONDUIT & TRAY SUPPORT POINTS

FIG 4-4
Enclosure and Support Requirements
- Protective Systems

Copyright © 1993 IEEE. All rights reserved
This is an unapproved IEEE Standards Draft, subject to change

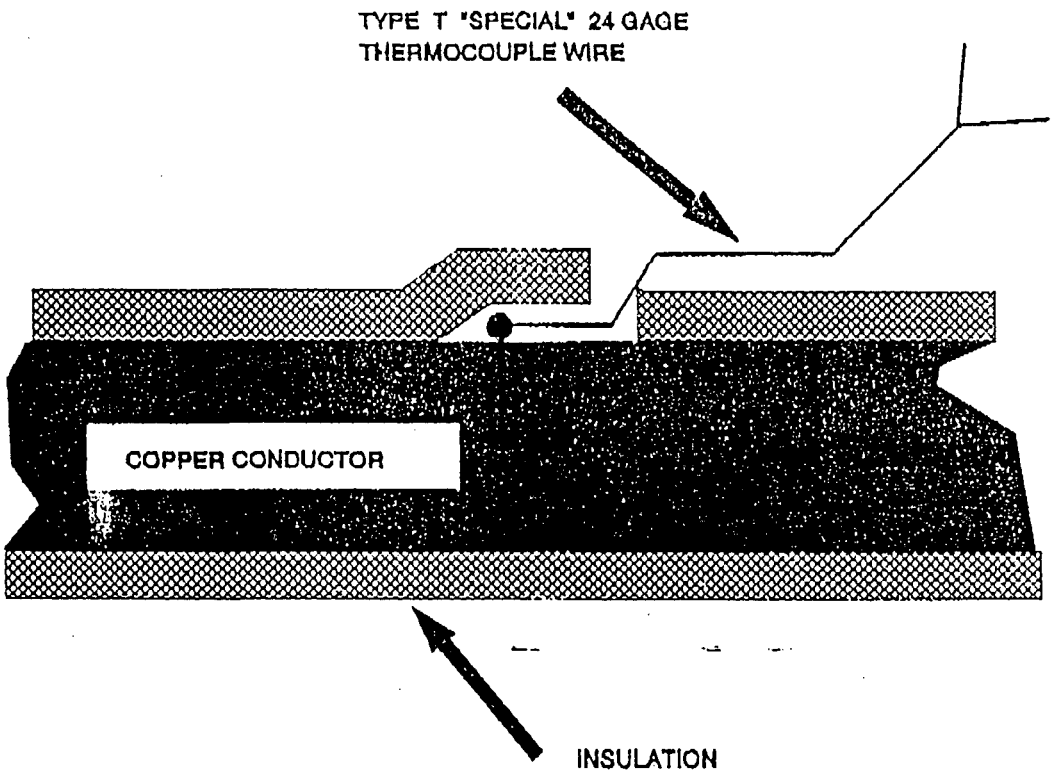

FIG 4-5
Thermocouple Attachment to Conductor

Copyright © 1993 IEEE. All rights reserved
This is an unapproved IEEE Standards Draft, subject to change

5 Evaluation of Test Results

5.1 Normalizing Test Results

After equilibrium has been achieved, the final conductor temperature and the ambient temperature may not match 90 C and 40 C respectively. The results of the baseline and the fire protected cable system tests must be normalized using equation 6 below. The conductor temperature shall be the hottest conductor temperature at location 2 for the protective cable system and location 1 for cable penetration fire stop. The final temperatures must be within the limits established in Section 4.5.4 and 4.5.3.

$$I' = I\sqrt{\frac{(Tc' - Ta')\ (\alpha + Tc)}{(Tc - Ta)\ (\alpha + Tc')}} \qquad (6)$$

where

I	test current at equilibrium, amperes
Tc	hottest conductor temperature at center at equilibrium, C
Ta	measured enclosure ambient temperature, C
I'	normalized current, amperes
Tc'	normalized conductor temperature - 90 C
Ta'	normalized ambient temperature - 40 C
alpha	234.5 for copper or 228.1 for aluminum

5.2 Ampacity Derating Factor

Using the normalized current, as determined from section 5.1, an ampacity derating factor can be calculated using the results of the baseline test and the protected cable system or cable fire stop. The ampacity derating factor (ADF) and ampacity correction factor (ACF) shall be calculated using equations 7 and 8. The user may find it may convenient to express the ampacity results as ampacity correction factor (ACF) for calculation purposes. ACF is applied in a similar fashion as conduit grouping factors and ambient temperature correction factor as shown in ICEA P-46-426.

$$ADF = \frac{(Io - If)}{Io}100 \qquad (7)$$

Copyright © 1993 IEEE. All rights reserved
This is an unapproved IEEE Standards Draft, subject to change

$$ACF = \frac{If}{Io} \quad (8)$$

Where

Io	is the normalized current for the baseline condition, amperes
If	is the normalized current for the passive fire protected cable system or cable penetration fire stop system
ADF	is the ampacity derating factor, %
ACF	is the ampacity correction factor

Ampacity derating factors shall be expressed in conjunction with reference to its baseline ampacity standard. This is especially important for cable penetration fire stops where the cable installation method outside the wall has a major influence on the resulting derating factor. Cable Fire stop ampacity derating factor is also restricted in terms of conductor size and material.

Examples illustrating how the ampacity derating factors must be expressed are shown below.

(1) ADF = 18 %, Floor Assembly-Fire Stop Penetration, Product design AAA, applied against ICEA P-46-426 "conduit in air ampacities" for 12 AWG aluminum or copper conductors and larger.

(2) ADF = 7 %, Wall Assembly Fire Stop Penetration, Product design AAA, applied against ICEA P-46-426 "conduit in air ampacities" for 1000 kcmil copper conductors or 1250 kcmil aluminum conductor and larger.

(3) ADF = 20 %, Fire Protective Material - Tray Application, Product design BBB, when applied against ICEA P-54-440.

(4) ADF = 18 %, Electrical Separation Wrap - Free Air Drop, Product design CCC, when applied against ICEA P-46-426 "in free air" ampacities.

6 Documentation of Testing

The test report and the resulting derating factor shall include the following documentation:

(1) Description of the test configuration

(2) Date of the test

(3) Location of the test

(4) Description of the test equipment and test articles

Copyright © 1993 IEEE. All rights reserved
This is an unapproved IEEE Standards Draft, subject to change

(5) Calibration documentation of all thermocouples

(6) Qualification and certification for test personnel

(7) Test procedures used.

(8) Ampacity values determined and accompanying equilibration temperatures.

(9) Provide quality control records for:

(a) Test article construction

(b) Qualification and certification for installation and inspection personnel

(c) Identification and installation of fire barrier material

(d) Thermocouple locations

(e) Cables, size, type, and location

(f) Actual tray and conduit cable fill, and calculated depth of cable fill as defined in ICEA P-54-440

(10) Computer printout and graphic results of the ampacity test

(11) All raw data

(12) 35 mm photographic coverage of the test project

(13) Documentation that product does or does not react at temperatures below 90°C.

(14) Documentation that moisture equilibrium has been achieved.

7 Bibliography

[B1] Stolpe, J., "Ampacities for Cables in Randomly Filled Trays", IEEE Transactions on Power Apparatus and Systems, Vol PAS 90, pp 962-973, 1971

[B2] Nemeth, C.W., RackLiffe, G.B., Legro, J.R., "Ampacites for Cables in Trays with Firestops" IEEE Transactions on Power Apparatus and Systems, Vol PAS 100, No. 7 July 1981

[B3] Herter, V.J., Barry, R.E., Began, T.A., "Ampacity Test of a Silicone Foam Firestop in a Cable Tray" IEEE Transactions on Power Apparatus and Systems, Vol PAS 100, No. 7 July 1981

[B4] Esteves, O.M., "Derating Cables in Trays Traversing Firestops or Wrapped Fireproofing" IEEE Transactions on Power Apparatus and Systems, Vol PAS 102, pp. 1478-1481, 1983

Copyright © 1993 IEEE. All rights reserved
This is an unapproved IEEE Standards Draft, subject to change

[B5] Petty, K.A. "Ampacity of Wrapped Cables" IEEE Transactions on Power Delivery Vol 3 No 1, January 1988

[B6] Hiranandani, A.K. "Rating Power Cables in Wrapped Cable Trays" IEEE Transactions on Power Delivery Vol 3 No 1, January 1988

[B7] Save, P., Engmann, G. "Fire Protection Wrapped Cable Tray Ampacity" IEEE Transactions on Power Generation Vol No , 1989

Copyright © 1993 IEEE. All rights reserved
This is an unapproved IEEE Standards Draft, subject to change

EXCEPTIONS TO IEEE P848/D11

Procedure for the Determination of the Ampacity Derating of Fire Protected Cables

1. Section 5.2.4 states the conduit shall be 12 feet long and supported 18 inches from each end.

   Exception: The conduit is 20 feet long and supported 5 feet from each end.

   Basis: The longer specimen will reduce the affects of heat transfer on the measured temperature. Draft 12 states a minimum of 12 feet.

2. Section 5.3.1 references Figure 3 which shows the enclosure width 132 inches.

   Exception: The enclosure width is 96 inches.

   Basis: The enclosure will be used only for conduit; no trays will be tested so the 96-inch enclosure will be sufficient.

3. Section 5.3.2.2 Part b states that 1-3 conductor 750 MCM copper cable will be used.

   Exception: Three single conductor 750 MCM cables will be bundled together to simulate 1-3 conductor.

   Basis: Draft 12 of the standard states that 3 single conductors can be used.

4. Section 5.3.2.5 states that Type K special grade thermocouples will be used.

   Exception: Type T thermocouples with an accuracy of $\pm$ .5°C will be used.

   Basis: Type T thermocouples verified to be within $\pm$ .5°C are more accurate than the type K special grade. Draft 12 of the standard states that Type T special grade thermocouples or a thermocouple of equivalent accuracy will be used.

5. Section 5.3.2.5 states that three thermocouples will be used to determine the conductor temperatures.

   Exception: Nine thermocouples will be used. Three thermocouples will be used in each conductor.

   Basis: Draft 12 states that three thermocouples will be used in each vertical plane.

EXCEPTIONS TO IEEE P848/D11 (CONTINUED)

Procedure for the Determination of the Ampacity Derating of Fire Protected Cables

6. Section 5.3.2.6 states the testing is to be sequential so that one conduit and cable is to be used for all of the testing.

   Exception Four 4" and four 1" conduits are being used for the test.

   Basis: The same instrumented cable set for the baseline and derating tests for each size conduit will be used as specified by draft 12. Different conduit specimens will be used since each Thermolag configuration has a 30-day curing period after installation.

7. Section 5.3.2.6 states that moisture content in percent moisture will be made on the Thermolag.

   Exception: The moisture content measurement will be made using a hand-held meter recommended by Thermal Science Incorporated (Thermolag manufacturer). Reference Attachment D, Page D-1. This instrumentation will not be traceable back to NIST.

   Basis: Draft 12 states that the moisture content will be reported to ensure that moisture equilibrium has been achieved.

8. Section 5.4.2 states the current value will be reported to 0.1 ampere, but no accuracy is stated.

   Exception: The accuracy for the current measurement will be +/- 1% of reading.

   Basis: Draft 12 states an accuracy of +/- 0.5% instead of an absolute current value. Per Attachment E, this value will be changed to +/- 1% in the final issue of P848.

9. Section 5.4.3 states that the rate of change will not exceed +/- .55°C/hour.

   Exception: A value of +/- .2°C/hour will be used.

   Basis: Draft 12 states the rate of change will be .2°C/hour.

ATTACHMENT D

THERMAL SCIENCE INCORPORATED ACCEPTANCE CRITERIA FOR MOISTURE CONTENT

February 23, 1993

Tennessee Valley Authority
LP-4H-C
1101 Market Street
Chattanooga, Tennessee 37402

Attention: Mr. William M. Roop, Jr.
Principal Electrical Engineer

Dear Mr. Roop:

In accord with the information presented in the operating instructions for the Delmhorst Moisture Meter, Model-DP, the manufacturer points out that even readings in the "red zone" of the dial indicate a relatively low moisture content, such as in concrete. The manufacturer further points out that a reading of 35 to 70 on the moisture meter usually indicates a range of moisture content between 2 and 4%.

We recommend that for dry acceptance purposes, the THERMO-LAG 330 Prefabricated Panels and Preshaped Conduit Sections be accepted when the Delmhorst Moisture Meter (Model-DP) has a moisture meter reading of less than 70, on the 0 to 100 scale.

We also recommend that in all areas where THERMO-LAG 330-1 Trowel Grade Material has been applied, that the same acceptance standard be used, a moisture meter reading of less than 70 on the 0 to 100 scale of the Delmhorst Moisture Meter (Model-DP).

Yours truly,

B. E. Evans
Quality Control Manager

BEE/mls

Fax No: 615-751-8247

THERMAL SCIENCE, INC. • 2200 CASSENS DR. • ST. LOUIS, MO 63026 • (314) 349-1233
Telex: 209901 (Answerback: TSI UR) • Telecopier (314) 349-1207

ATTACHMENT E

MEMORANDUM FROM CORPORATE ENGINEERING TO DOCUMENT THE CURRENT ACCURACY REQUIREMENT

B44 930302 001

QA RECORD

March 2, 1993

R.L Morley, PSB1B-C

WATTS BAR NUCLEAR PLANT
AMPACITY DERATING TESTS FOR THERMOLAG FIRE BARRIER MATERIAL
CLSD JOB NUMBER 93-0501

The purpose of this memorandum is to confirm information given to your C.L. Rutledge by K.W. Brown on March 1, 1993. During the course of the review of revision 0 of the test plan for the subject task, it was noted that accuracy requirements in Draft 12 of IEEE P-848 contain a typographical error.

Section 5.4.2 of draft 11 of the subject standard required that the current be measured to within 0.1 amps. As was noted during the March 1 review, the 0.1 amp requirement was a carry over from an earlier draft in which only 3/c No. 6 AWG cables were utilized. Subsequently, derating tests for fire protected conduits were revised to require the use of a 4-inch conduit containing 3-1/c 750 kcmil cables but the working group failed to change the accuracy requirements to a percentage of reading. Such an approach would better reflect the wide disparity between the magnitude of current which would be required for No. 6 AWG and 750 kcmil. Consequently, section 4.5.2 of draft 12 of the standard was revised.

Our K.W. Brown is a member of IEEE/ICC Working Group 12-45 which is preparing the standard. He has checked with other members who were present at the February 22-23 meetings in Boston where draft 12 was prepared and has confirmed that the 0.5 percent limit therein was an error. The requirement should have been to measure current to a 1 percent accuracy. The Working Group has already agreed to correct this section.

Therefore, section 5.3.10 of the test plan shall require that currents during the derating tests are measured with an accuracy of 1 percent.

Should you have any questions regarding the above please contact me at 751-7501.

R.E. Miller
LP4H-C

cc: RIMS, MR 2F-C
J.A. Krieg, LP4H-C
W.R. Roop, LP4H-C
K.W. Brown, LP4H-C

TEST PLAN

WATTS BAR NUCLEAR PLANT
TESTING TO DETERMINE AMPACITY DERATING FACTORS FOR FIRE PROTECTED CABLES

JOB NUMBER 93-0501

Revision 0

March 2, 1993

C. L. Rutledge
Project Engineer

Engineering Services
Section

W. E. Joly
QA Supervisor

Customer Approval

TEST PLAN

REVISION LOG

Job Number 93-0501

Revision Date	Pages Affected	Description of Change	Prepared By	Approved
Rev. 0 03/02/93	All	Initial Issue	C.L.Rutledge	

TABLE OF CONTENTS

1.0 Scope

2.0 References

3.0 Quality Assurance

4.0 Receipt Inspection

5.0 Test Procedure

6.0 Report

7.0 Attachments

1.0 SCOPE

The scope of this test is to perform ampacity derating testing for eight configurations of cable and conduit. Four one-inch and four four-inch conduits with various cable configurations will be tested. The testing will be conducted in a temperature stable enclosure and the enclosure temperature, conductor temperature and current will be measured and recorded. This testing will be performed in accordance with P848 Draft 11. Reference Attachment C, pages C-1 through C-45 for a copy of the standards (drafts 11 and 12) and Attachment C, page C-46 and C-47 for a list of the exceptions to draft 11 of this proposed standard.

2.0 REFERENCES

2.1 CLS-QAP-1.1 "Organization"

2.2 CLS-QAP-4.1 "M & TE Calibration Program"

2.3 CLS-QAP-4.7 "Engineering Services Program"

2.4 ANSI N45.2-1971 "Test Control"

2.5 10 CFR 50 Appendix B "Quality Assurance Criteria for Nuclear Power Plants"

3.0 QUALITY ASSURANCE

3.1 Test Equipment

All test equipment and instrumentation to be used in the performance of this test program shall be calibrated in accordance with applicable standards and QA procedures and will conform to applicable portions of ANSI N45.2 and 10 CFR 50 Appendix B except the moisture meter described in Steps 5.3.3 and 5.3.14. Standards used in performing all calibrations are traceable to the National Institute of Standards and Technology (NIST), natural physical constants, or commercially accepted practices.

3.2 Personnel and Procedures

All personnel, procedures, and instructions used in the performance of this test program shall comply with the applicable requirements of the Central Laboratories Services Department (CLSD) Quality Assurance Program.

4.0 RECEIPT INSPECTION

4.1 Tagging

Each conduit configuration shall have a tag attached for identification. The tag shall bear a unique number with the following format, XX-YYYY-Z where XX- YYYY is the job number and Z denotes the individual test sample. All data associated with the conduit configuration will be identified by this number.

4.2 Inspection

The conduit and cable will be inspected to ensure they are free from any physical defects that will prevent testing from being performed.

5.0 TEST PROCEDURE

5.1 Preparation of Test Specimens

5.1.1 Four 20-foot conduits (two 10-foot sections coupled together) each for one-inch and four-inch conduits will be prepared.

5.1.2 Weigh a minimum of one 20-foot section of each one-inch and four-inch conduit to obtain an approximate weight of the conduit and couplings.

5.1.3 Measure the circumference of one of the four-inch and one of the one-inch conduits. This will be used to calculate the thickness of the Thermolag and Thermolag with upgrade after it has been applied to the conduit.

5.1.4 Each section of conduit shall be supported 60 inches from each end and shall be thermally isolated from the conduit. This shall be accomplished by installing a mineral fiber blanket and/or blocks of wood to form a thermal break.

5.1.5 Each of the following configurations will be prepared.

1) One-inch conduit with no Thermolag (baseline)
2) One-inch conduit with 1/2-inch Thermolag
3) One-inch conduit with 1/2-inch Thermolag and 1/4 inch upgrade
4) One-inch conduit with 1/4-inch Thermolag and 1/4-inch upgrade
5) Four-inch conduit with no Thermolag (baseline)
6) Four-inch conduit with 1/2-inch Thermolag
7) Four-inch conduit with 1/2-inch Thermolag and 1/4-inch upgrade
8) Four-inch conduit with 1/4-inch Thermolag and 1/4-inch upgrade

TVA Nuclear Engineering will supply personnel to assemble these test configurations.

5.2 Preparation of the Test Facility

5.2.1 An enclosure shall be constructed so that the temperature around the specimen shall be controlled at the test temperature of 40°C ± 2°C. Some induced air movement within the enclosure is necessary to achieve uniform steady-state temperatures, but care will be taken to avoid direct air currents against the test specimens. Method of ambient temperature control within the test enclosure is important and care will be taken to avoid any additional heat loading on the cables by radiation from heat sources.

5.2.2 The temperature inside the enclosure shall be measured at no less than three places one foot from the specimen and in the horizontal plane of the test specimen. The temperature of the enclosure will be taken as the average of the steady state measurements.

5.3 Test Procedure

5.3.1 Weigh the conduit and Thermolag configurations. Record the information in the log book.

5.3.2 Measure the Thermolag circumference at 20 places along the length of each conduit and average the data. Using the baseline measurement, calculate the Thermolag thickness. Record the information in the log book.

5.3.3 Measure the moisture content of the Thermolag using a hand held moisture meter. Measurements will be taken on the top and bottom exterior of the conduit at the midsection. This measurement shall be made a minimum of two times. The first measurement shall be at least 24 hours prior to beginning the test and the second measurement shall be within four hours of beginning the testing. The moisture instrument is not traceable to NIST.

5.3.4 One three conductor #6 AWG shall be prepared for the one-inch conduits and single conductor 750 KCM copper cables shall be prepared to simulate a three conductor cable for the four-inch conduits. The same prepared cables will be used for testing each configuration of conduit and Thermolag.

5.3.5 Thermocouples with be installed approximately nine feet from one end and eleven feet from the other end so that the thermocouple placement is not at the coupling and then approximately three feet on either side of the center thermocouple. Reference Attachment A, page A-2.
The outer jacket will be split or a flap cut, and the inner insulation for each of the conductors will be split or a flap cut.
The thermojunction for the thermocouple (24 gage, Type T with an accuracy of ± 0.5°C) will be inserted into the strands of each of the three conductors. The slit/flap will be resealed with a single layer of spiral wrap of electrical tape. This configuration will have a total of nine thermocouples for each test specimen. The thermocouple lead wires shall be bundled in the center of the three 750 mcm conductors. The cable and thermocouples shall be tied with tape or stainless steel bands every two feet.

5.3.6 The cables with the thermocouples installed shall be pulled into place in the conduit.

5.3.7 The cables shall be connected as a single series electrical circuit, which contains all conductors in the system.

5.3.8 The cables which penetrate the end of the conduit shall be wrapped with thermal insulation. Electrically heated tape may be used to allow the end of the cable to be adjusted to keep the two outer thermocouples within 4°C of the center.

5.3.9 Seal the ends of the conduit with insulation material.

5.3.10 The circuit shall be energized with 60 Hz, single phase alternating current sufficient to reach a steady-state temperature of 90°C at the hottest single point monitored at location two. (Reference Attachment A, page A-2.) The current values measured shall be reported to the nearest 0.1 ampere, and will be accurate to ± 1% of reading.

5.3.11 The temperature measurements will be recorded on a data logger and at intervals no greater than 1 minute. The current in each test circuit shall be adjusted to achieve a hot spot conductor temperature of 90°C ± 1.1°C at location #2. The average temperatures at locations #1 and #3 shall be within 4°C of the average temperature readings at location #2.

5.3.12 The system will be considered to be in steady state condition when a three-hour period has elapsed since any perturbation of the system occurred (current adjustment, box temperature change, additional insulation placed on ends, etc.) and the rate of change of the average of all monitored conductor temperatures in that circuitry does not exceed ± .2°C. Readjustment of the current flow to a circuit in order to maintain a given amperage value is not to be considered a perturbation.

5.3.13 In order to statistically assure thermal equilibrium, the conductor temperature will be averaged at each sampling period and a linear regression analysis performed on the data obtained from that and all other averages taken of the preceding 60-minute period. The slope of the line will be in °C/hour. As soon as the absolute value of the slope of these data becomes less than 0.2, equilibrium has been reached. Reference Attachment B for a detailed procedure for performing this analysis. This will be performed using computerized data retrieval and analysis. (Reference Attachment A, page A-1 for test setup.)

5.3.14 Measure the moisture content of the Thermolag using a hand held moisture meter. Measurements will be taken on the top and bottom exterior of the conduit at the midsection. This measurement shall be made within four hours of completing the test. The moisture instrument is not traceable to NIST.

6.0 REPORT

6.1 Final Report

The final report shall describe the test requirements, report the results of the tests, and reference procedures and test instructions required to perform this test plan. The following information specifically shall be included.

1. Description of the test configuration.
2. Date of the test.
3. Location of the test.
4. Description of the test equipment and test articles.
5. Calibration documentation of all thermocouples.
6. Qualification and certification for test personnel.
7. Test procedures used.
8. Ampacity values determined and accompanying equilibrium temperatures.
9. Description of:
   a. Test article construction
   b. Installation and inspection procedure
   c. Identification and installation of fire barrier material
   d. Thermocouple locations
   e. Cables, size, type, and location
10. Computer printout and graphic results of the ampacity test.
11. All raw data.
12. 35mm photographic coverage of the test project.
13. Provide a chronological log (Event Log) of all activities from receipt of materials through final test report.

6.2 Anomalies

All abnormal or unusual occurrences related to the performance of the test instrumentation, test fixtures, or test specimens shall be reported as an anomaly. This shall also include deficiencies in test methods, procedures, instructions and any deviation from the test plan.

A notice of anomaly report shall be initiated and forwarded to the customer once an anomaly has been identified. All anomalies shall be investigated, their impact on the test shall be established, and corrective action acceptable to the customer accomplished prior to continuation of any testing. Final customer acceptance shall be documented by the customer's approval of the notice of anomaly report.

7.0 ATTACHMENTS

7.1 Attachment A - Test Setup

7.2 Attachment B - Linear Regression Fit Method

7.3 Attachment C - Drafts 11 and 12 of IEEE P848 and Exceptions to Draft 11

7.4 Attachment D - Thermal Science Incorporated Acceptance Criteria for Moisture Content

7.5 Attachment E - Memorandum from Corporate Engineering to document the current accuracy requirement

0186T

ATTACHMENT A

TEST SETUP

TEST SET-UP FOR ONE CONDUIT AND CABLE ARRANGEMENT TYPICAL OF TWO

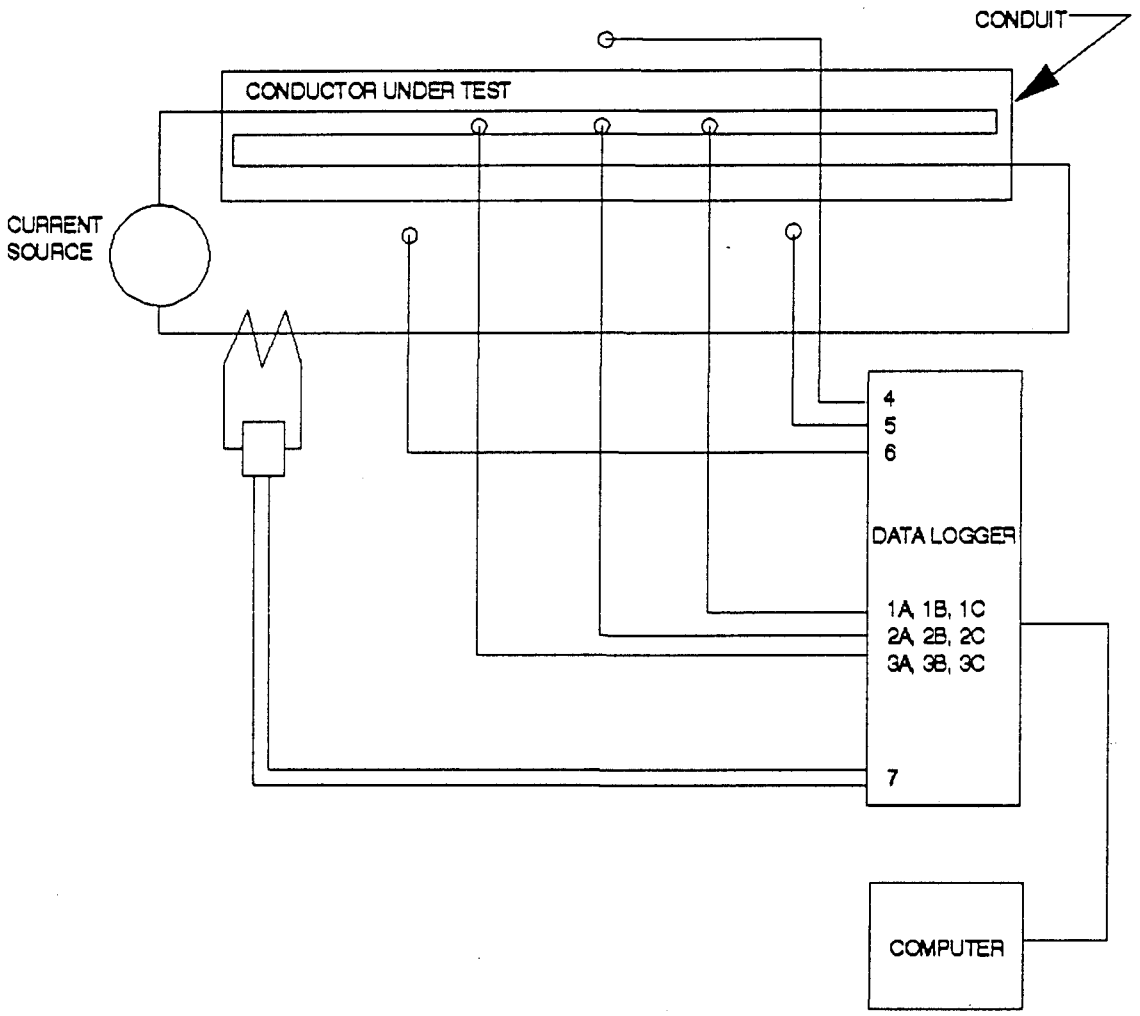

INPUTS 1, 2, AND 3 AVERAGED AND USED TO CALCULATE LINEAR REGRESSION.
EACH CONDUCTOR WILL HAVE A THERMOCOUPLE INSTALLED IN IT. THIS WILL YIELD A TOTAL OF NINE TEMPERATURES TO BE AVERAGED.
THE SLOPE OF THE LINE MUST BE LESS THAN THE ABSOLUTE VALUE OF 0.2
INPUTS 4, 5, AND 6 AVERAGED FOR ROOM TEMPERATURE 40 DEG C +/- 2 DEG C
INPUT 7 IS THE CURRENT MEASURED IN THE CIRCUIT BY MEANS OF A CURRENT TRANSFORMER AND CURRENT TRANSDUCER.

C:\FL\CINDY\9305014.DWG

THERMOCOUPLE LOCATIONS

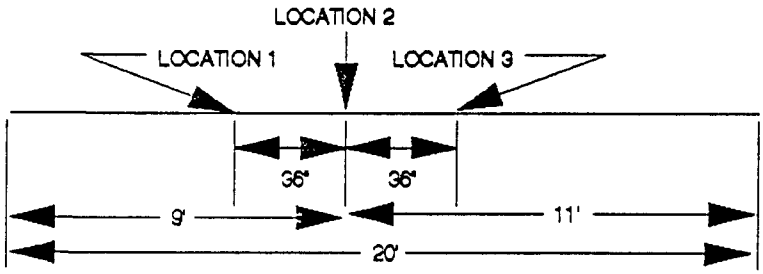

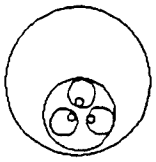

THERMOCOUPLE GOES ON THE CONDUCTORS
ONE ON EACH CONDUCTOR AT EACH LOCATION.

ENCLOSURE WALLS A MINIMUM OF 18 INCHES FROM THE SUPPORTS
SUPPORTS LOCATED 5 FEET FROM EACH END.

A-2

C:\FL\CINDY\9305011.DWG

ATTACHMENT B

LINEAR REGRESSION METHOD

As an example the least-squares technique, consider the conduit in Attachment A, page A-1. At each sampling time, an average temperature of 9 thermocouples will be calculated. This value will then be added to the top of an array large enough the hold 60 minutes worth of these averages, and the oldest value discarded. A linear regression fit is then performed on the array. When the next data sampling is completed, the entire process is repeated, thus yielding a linear regression fit of the data from the previous 60 minutes. As each new data point is added to the array, all previous ones are shifted down on time increment until each is finally discarded due to the fixed size of the array.

$$Y = mX + b \qquad \overline{X} = \sum X/n \qquad \overline{Y} = \sum Y/n$$

$$m = \frac{\sum XY - \dfrac{\sum X \sum Y}{n}}{\sum X^2 - \dfrac{(\sum X)^2}{n}}$$

$$b = \overline{Y} - m\overline{X}$$

WHERE:

X=AVERAGE CONDUCTOR TEMPERATURE (DEG C)

Y=TIME INCREMENT (MIN)

M=SLOPE OF LINE(DEG C/MIN)

B=Y-AXIS INTERCEPT 9DEG C)

C:\FL\CINDY\9305016.DWG

ATTACHMENT C

DRAFTS 11 AND 12 OF IEEE P848 AND EXCEPTIONS TO DRAFT 11

ATTACHMENT 2

April 6, 1992

P848/D11

PROCEDURE FOR THE DETERMINATION OF THE AMPACITY DERATING OF FIRE PROTECTED CABLES

Prepared by Task Group 12-45
of the Test and Measurements Subcommittee #12
of the IEEE Insulated Conductors Committee

All rights reserved by the Institute of Electrical and Electronics Engineers, Inc.

At the time this draft was completed, the Task Group on Procedure for the Determination of the Ampacity Derating of Fire Protected Cables had the following membership.

A.K. Gwal, Chairman

T. J. Al-Hussaini
P. Bhatia
E. A. Capouch
E. J. Coffey
E. J. D'Aquanno
R. Das
J. Daly
P. J. Finnerty
J. B. Gardner
P. A. Giaccaglia
A. Hiranandani
C.V. Johnson
A.E. Kollar
R. G. Koza
R. Licht
J. E. Merando, Jr.
K. W. Prier
D. N. Priest
B. E. Reagan
G. A. Remaley
P. D. Skelly
M. Spurlock
W. Torok
J. R. Tuzinski
F. W. Van Nest
T. A. Venkataraman
J. G. Waligorski

Other individuals who have contributed are:

K. W. Brown
D. C. Gasda

PROCEDURE

for the Determination

of the

AMPACITY DERATING OF FIRE PROTECTED CABLES

DRAFT 11

April 1992

INTRODUCTION

Many installations incorporate individual or grouped cables which do not limit the flame propagation under fire conditions. This deficiency can be attributed to conventional cable constructions, such as polyethylene insulated PVC jacketed control cables; which were popular in the sixties and early seventies. Such cables do not meet the flame spread criteria when subjected to the vertical tray flame test which has been accepted in one form or another. Other installations which fall in the same category include metal sheathed or armored vertical shaft cables with overall polyethylene jacket and secured with clamps at various intervals. Polyethylene jacket is used because of its high resistance to creep under pressure in the clamp area to support the sheer weight of the cable.

The foregoing installations include industrial, commercial, marine, nuclear or fossil generating stations and others.

To retard the flame propagation properties of cables in cable trays, protective coatings are applied either along the entire length of the cable(s) or in certain sections as deemed necessary. The flame retardant coatings may be in a form of tapes, blankets, liquids or mastics applied to individual or to grouped cables, both for retrofitting existing installations or for new installations.

1. PURPOSE

The purpose of the standard is to provide a test procedure which may be used to determine the ampacity derating required for fire protected cables in conduit, in penetrations (fire stop) and in cable tray systems.

2. SCOPE

This standard provides a detailed procedure for determining the ampacity derating required for fire protected cable systems. The tests are intended to be used to determine the ampacity derating of fire protected systems which is to be applied to the ampacity of cables determined by standard methods such as ICEA P-46-426 Power Cable Ampacity Volumes 1 & 2, and ICEA P-54-440 Cables in Open-top Cable Trays.

2.1 General

The procedure presented in this standard includes the principles and methods of testing. This test procedure will provide the ampacity derating of a fire protected cable system.

2.2 Applicability

Fire protected cable systems outlined herein are intended for use in power generating stations, both nuclear and fossil, as well as other applicable commercial and industrial installations, both outdoors and indoor. The categories of cables include, but are not limited to: power, control, and instrumentation including signal and communication cables. Testing of flame retardant coatings on horizontal cables will qualify the coatings for all orientations. The tests as described herein are intended to be used in determining the derating factor, which may be required for fire protected cables in conduits and trays. The ampacity of the cable in raceway will typically have first been determined using accepted practices such as ICEA P-46-426 Power Cable Ampacities Volumes I and II, and ICEA P-54-440 Cables in Open-Top Cable Trays.

The user of flame retardant coatings is cautioned to determine that the coating is compatible with the cable materials with which it comes in contact and with the environment in which it is installed. The user may specify tests in addition to those specified in this standard to reflect the installation conditions, e.g., for nuclear stations, the user may wish to add irradiation test or effects of added weight; or for outdoor installations, the user may wish to add a U.V. resistance test.

3. DEFINITIONS

These definitions establish the meanings of words in the context of their use in this standard.

Fire Protected Cable Systems

Cable systems to which an application of a flame retardant barrier, fire resistive barrier or coating (flame retardant coating) to protect cables from fires from any cause has been applied.

Flame Retardant Coatings

A material applied to a completed cable or assembly of cables to prevent the propagation of flame when exposed to a flame source. Flame retardant coatings include tapes, blankets, liquids, flame retardant mechanical system or mastics.

Passive Fire Protection Systems

Systems which embody fire resistant construction such as coatings, barriers, walls, and penetrations (fire stops) as opposed to water sprinkler systems or gaseous extinguishing systems.

Through-Penetration Fire-stop

A specific construction of devices, fill materials, or both, designed to resist the penetration of fire through those openings in fire resistive floors or walls that are intended to accommodate electric cables, raceways and mechanical service penetrations.

Ampacity Derating Factor

A factor applicable to the ampacity rating of a cable (or other device) to account for the adverse affects of some installation or environmental condition.

Raceway

Any channel that is designed and used expressly for supporting or enclosing wires, cables, or bus bars. Raceways consist primarily of, but are not restricted to, cable trays and conduits.

Cable Tray

A continuous rigid structure used to support cables. Cable trays include ladders, troughs, channels and other similar structures. Conduits are not included in this category.

Enclosures

A surrounding case or housing used to protect the contained equipment and prevent personnel from accidentally contacting live parts.

4. REFERENCES

The following standards were used as references in preparing this standard and may be useful in the interpretation of its meaning:

ICEA P-46-426/IEEE S-135
Power Cable Ampacities, Vols. 1 and 2. Dated 1962 (Reprinted in 1984).

ICEA P-54-440/NEMA WC-51
Ampacities - Cable in Open Top Cable Trays. Dated 1986.

5. TEST DESCRIPTION

5.1 General

This section describes the method for determining ampacities of cable passing through single tray and conduit with and without a passive fire protection system.

5.1.1 Applicability

This method shall be applicable to a single cable or groups of cables enclosed in a passive fire protection system. Cables may be contained in a raceway or as dictated by the actual installation.

5.1.2 Method of Testing

Ampacity derating for cables of a passive fire protective system shall be by testing. Testing shall be performed using the configurations depicted in Figures 1 and 2. As an alternative, tests may be performed using representative assembly which can be analyzed to show its applicability to actual installed conditions. Results are also applicable for 1000 volts and higher rated cables.

5.2 Test Specimens

5.2.1 Cable Selection

The cable to be utilized is chosen as one which is representative of a wide range of cables. The selection of a 3 conductor cross link polyethylene insulated, #6 AWG 600 volts copper cable with an overall chlorosulfonated polyethylene (i.e. hypalon) jacket was chosen as representative.

5.2.2 Cable Fill

Cable fill is the ratio of cable area to the inside area of the tray expressed in percentage. A 40 percent cable fill, as determined from actual measurement shall be used for cable trays.

5.2.3 Cable Layout

The length of both the conduit and the tray shall be twelve feet. One to two feet of cable shall extend out each end and shall be wrapped with unfaced fiberglass blanket insulation (or electrically-heated tape) as necessary to eliminate heat flow out of raceway ends.

5.2.4 Conduit

The conduit system shall be 4 inch and 1 inch steel rigid conduit, 12 feet long supported every 18 inches from each end by a horizontal piece of "H"-shaped or 2" x 2" square structural tubing.

5.2.5 Tray

The tray shall be a 4 inch deep, 24 inch wide ladder-back steel cable tray 12 feet and support similarly to the conduit system. The tray and conduit systems, if tested together, must be at least 36 inches apart along their lengths.

5.2.6 Through-Penetration Fire-stops

A through-penetration fire-stop intended for installation in a fire resistive floor assembly, wall assembly, or both, is to be installed in a wall section so that the electrical cables pass horizontally through the wall. The through-penetration fire-stop is to be installed in

accordance with all requirements specified for the fire-stop being tested.

The sample wall section is to be representative of that specified for the through-penetration fire-stop. The thickness of the wall section is to be equal to the maximum thickness of the fir-estop system or device. The size of the through opening in the wall section is to be representative of the through opening size specified for the through-penetration fire-stop.

The fire protective system is to be installed around the electrical cable(s) and raceway(s) in accordance with all requirements specified for the system.

5.3 Test Facility

5.3.1 Test Room

The ampacity test shall be conducted in an enclosure as defined in Figure 3. The test specimen shall be suitably enclosed such that temperature around the specimen shall be controlled at the test temperature of 40°C±2°C. The enclosure surrounding the test specimen shall be of even temperature, but must not cause drafts on the test specimen. The temperature inside the enclosure shall be measured at no less than three places one foot from the specimen, and in the horizontal plane of the test specimen. The temperature of the enclosure shall be taken as the average of the steady state measurements.

5.3.2 Cable Installation

5.3.2.1 Tray

The tray is to be loaded with three conductor #6 AWG, 3/c copper cable, with an overall chlorosulfonated polyethylene jacket. The tray fill should be based on 40 percent fill.

Tray cables should be installed in an orderly, symmetric manner, so as to limit the flow of air through the bundle, and to facilitate inter and intra-laboratory repeatability of these tests. The cables shall be connected as a single series electrical circuit, which contains all conductors in the system. The tray is to be supported by two horizontal pieces of "H"-shaped or a suitable support system, located as shown in Figure 3. A 3" x 25" piece

of 1" thick mineral fiber blanket shall be placed between the tray and support system to form a thermal break. Thermal insulation (e.g., fiberglass or electrically-heated tape) shall be wrapped around the cable which extends out of both ends of the tray to allow adjustment of end temperatures. The end temperatures must be adjusted such that the average values for the thermocouples at locations 1 and 3 are within 4°C of the average for location 2 to minimize axial heat flow.

5.3.2.2 Conduit

Since the application of the fire protection system may result in differing derating for different conduit sizes, two sizes of conduits shall be tested:

(a) 1 inch rigid steel conduit with one 3/c No 6 AWG copper cable

(b) 4 inch rigid steel conduit with one 3/c, 750 Kcmil copper cable

Derating for both sizes shall be reported. Lowest factor shall be used for ampacity derating. The bundle shall be instrumented with thermocouples as shown in Figure 2, tied with wraps every 2 feet, and pulled into position in the conduit. The cables shall be connected as a single series electrical circuit, which contains all conductors in the system. The conduit is to be supported by two horizontal pieces of "H" shaped or 2" x 2" structural square tubing with a minimum of 36 inches clearance from the tray or walls of the enclosure. The attachment points between the conduit and the supporting beam are to be insulated with 1" thick mineral fiber blanket to form a thermal break similar to the tray system. Insulation (or electrically-heated tape) shall be wrapped around the cable which extends out of both ends of the conduit to allow adjustment of end temperatures. The end temperatures must be adjusted such that the average values for the thermocouples at locations 1 and 3 are within 4°C of the average for location 2, to minimize axial heat flow. In other words, the ends should be close to the same temperatures as the middle, thereby minimizing axial heat flow.

5.3.2.3 Through-Penetration Fire-stops

The electrical cable(s) and raceway(s) penetrating the sample wall section are to be representative of those specified for the through-penetration fire-stop and are to be of sufficient length to project a minimum of 24 inches beyond both sides of the wall section. For this purpose maximum thickness of fire-stop shall be measured. Thermocouples on the electrical cables in through-penetration fire-stops are to be located so that temperatures are measured in the interior of the fire-stop and at the fire-stop mid-depth as in figure 5.

5.3.2.4 Orientation

The test specimens shall be mounted and the tests run in the horizontal direction so as to eliminate any possibility of a "chimney-effect" which could cause air movement within the system.

5.3.2.5 Thermocouple Placement

Thermocouples (24 gage, Type K [Special Grade] Chromel-Alumel, accuracy ±1.15°C) shall be installed by slitting the cable insulation and jacket and placing the thermojunction in intimate physical contact with the conductor strands, as illustrated in Figure 4. The cable shall then be restored as closely as possible to its original condition, and the slit sealed with a single-layer spiral wrap of electrical tape. Since the test is evaluating the temperature at the hottest position, rather than the average of all thermocouples, the cables within the bundle have been instrumented, instead of those near the outside. For both the conduit and tray systems, thermocouples shall be placed at each of three vertical planes along their lengths, as illustrated in Figures 1 and 2. The tray system shall be instrumented with 13 thermocouples at each plane, for a total of 39 thermocouples, and the conduit system shall be monitored with 1 thermocouple at each plane, for a total of 3 thermocouples.

5.3.2.6 Installation of Passive Fire Protection Systems

The tray and/or conduit is to be lifted off it's support after the completion of the baseline test, the passive fire protective system applied in accordance with the manufacturer's instructions, and the entire assembly lowered onto the horizontal

support, thereby minimizing any heat sink effect from the support system. After installation, the passive fire protection system shall be allowed to equilibrate (or cure) to a state of constant moisture content, if applicable. Moisture content (in terms of percent moisture) shall be taken 4 hours or less before the test is begun and within 4 hours after completion of the test, using either a hand-held moisture meter, or standard 120°C oven-dry methods). Such moisture determination is to be made on the top and bottom exterior surfaces of both the tray and conduit systems at their mid-length, and the results of top and bottom averaged.

5.4 Test Procedure

5.4.1 Baseline Evaluation

At least one baseline experiment for each system (conduit and tray) using Sections 5.4.2, 5.4.4, and 5.4.5 shall be conducted to establish the cable ampacity prior to application of the fire protective system. The ampacity value measured should be compared to the IEEE-ICEA Power Cable ampacities standards.

5.4.2 Current

The circuit shall be energized with 60 Hz, single phase alternating current sufficient to reach a steady-state temperature of 90°C at the hottest single point monitored at location 2 (see Figures 1 & 2). The current values measured shall be reported to the nearest 0.1 ampere. The use of a constant-current amplifier is highly recommended as a power source, since the increasing temperatures of the conductor circuit cause resistance changes. Alternatively large variable transformers may be used, with constant readjustment to maintain a set current flow.

5.4.3 Temperature Measurement

All temperatures shall be recorded at intervals no greater than 1 minute. The current in each test circuit shall be adjusted so as to give an equilibrium temperature of 90°C±1.1°C at the hottest point monitored within location #2 (those located at the center of the system). The average temperatures of thermocouple locations #1 and #3 shall be within ±4°C of the average of thermocouple location #2. Each cable circuit shall be

considered to be in steady state condition when a three-hour period has elapsed since any perturbation of the system occurred (current adjustment, box temperature change, additional insulation placed on ends, etc.) and the rate of change of the average of all monitored conductor temperatures in that circuit does not exceed ±0.55°C for the conduit[1] and ±0.35°C for tray[1]. Re-adjustment of the current flow to a circuit in order to maintain a given amperage value is not to be considered a perturbation.

In order to statistically assure thermal equilibrium, the conductor temperatures should be averaged at each sampling period and a linear regression analysis (least-squares fit) performed on the data obtained from that and all other averages taken over the preceding 60 minute period. The slope of the line obtained will be in units of °C/hour. As soon as the absolute value of the slope of these data becomes less than 0.55 (conduit) or 0.35 (tray), equilibrium has been reached. The degrees of freedom obtained by averaging many thermocouple locations (3 for conduit, 39 for tray), allows the precision to exceed the ±1.1°C limit of any one thermocouple. The only practical method of obtaining the required accuracy in determining thermal equilibrium is through the use of computerized data retrieval.

As an example of the least-squares technique, consider the tray system in Figure 1. At each sampling time, an average temperature of thermocouples 1 through 39 will be calculated. This value will then be added to the top of an array large enough to hold 60 minutes worth of these averages, and the oldest value discarded. A linear regression fit is then performed on the array and presented on the video screen to the operator. When the next data sampling is completed, the entire process is repeated, thus yield a linear regression fit of the data from the previous 60 minutes. As each new data point is added to array, all previous ones are shifted down one time increment, until each is finally discarded due to the fixed size of the array.

[1] Chosen as the 95% confidence limits for Special Grade, Type K thermocouples at 90°C.

LINEAR REGRESSION (LEAST SQUARES METHOD) FIT:

$$Y = mX + b \qquad \overline{X} = \Sigma X/n$$

$$\overline{Y} = \Sigma Y/n$$

$$m = \frac{\Sigma XY - \frac{\Sigma X \Sigma Y}{n}}{\Sigma X^2 - \frac{(\Sigma X)^2}{n}}$$

$$b = \overline{Y} - m\overline{X}$$

Where:

Y = Average Conductor Temperature (°C)
X = Time Increment (min)
m = Slope of line (C/min)
b = Y-Axis intercept (°C)

5.4.4 Enclosure Temperature

The temperature within the test enclosure shall be controlled to 40°C ±2°C. Some induced air movement within the enclosure is necessary to achieve uniform steady-state temperatures, but care must be taken to avoid direct air currents against the test specimens. Method of ambient temperature control within the test enclosure is important and care must be taken to avoid any additional heat loading on the cables by radiation from heat source.

6. EVALUATION OF TESTS

By a simple comparison of the baseline and test specimen ampacities, a derating factor can be calculated.

Data Interpretation: Ampacity Derating Factor

The maximum current carrying capacity shall be determined by derating applied as dictated by the test. The derating factor as determined by the test is to be calculated as follows:

% Ampacity Derating Factor = $(I_0 - I_f)/ I_0 \times 100$

Where:

I_0 = Current in amperes required to attain a temperature of 90 °C for the baseline (un-protected) system. However, if I_0 is larger than published ampacity i.e. ICEA P-46-426, P-54-440 then published ampacity shall be used for I_0.

I_f = Current in amperes required to attain a temperature of 90 °C for the system as protected by the passive fire protection system.

7. DOCUMENTATION OF TESTING

Following the procedure outlined in this standard, provide percentage ampacity derating and record the following specific data.

- Description of cables and raceway, if different from specified herein.
- All thermocouple data
- All current and voltage values
- Current and conductor temperature values observed at equilibrium
- Weight of passive fire protection system (lb/ft)
- Average thickness of fire protective system (inches)
- Details of installation of fire protective system

The documentation of records shall be provided in the form of a FINAL REPORT. The report shall contain for permanent record all information pertaining to the test including the Test Plan, laboratory notebook, all raw data, interpretations, and observations. The report shall provide the documentation of all the above parameters and evidence of calibration to NIST standards for equipment used in obtaining this data (including before and after calibration of thermocouples), and appropriate resolution of any test anomalies. All calculations, conclusions or interpretations shall have been checked and approved by authorized individuals certified by the testing organization to be knowledgeable of the techniques used.

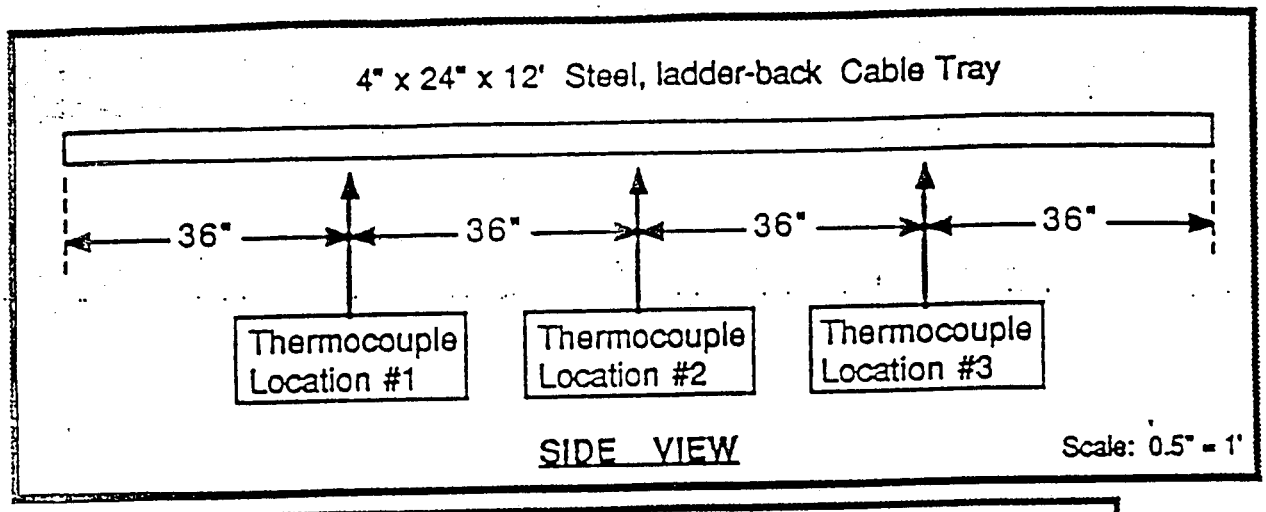

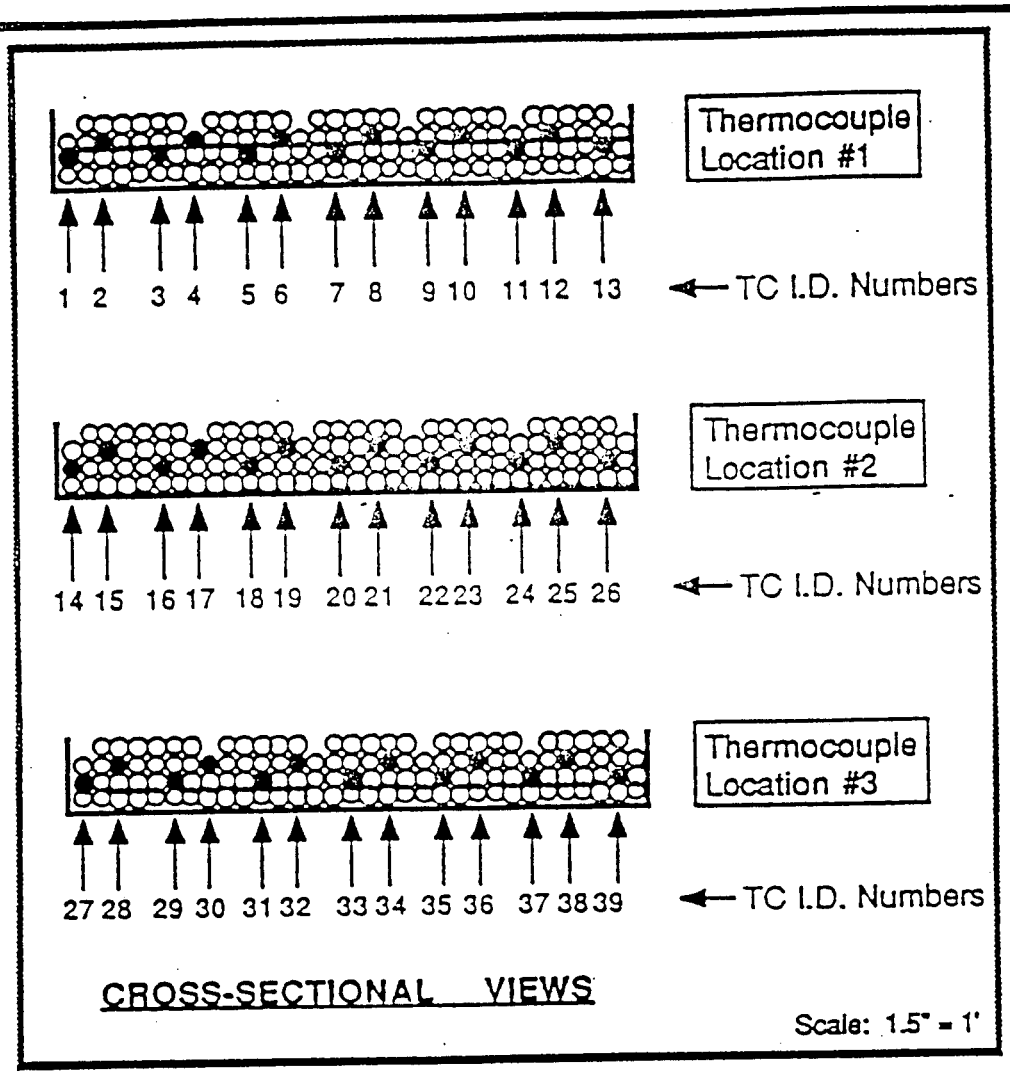

NOTE: Cable tray is to be 100% visual-fill with 3 Conductor #6 AWG Cable. Number of cables = 122. Cable diameter = 0.75 inch.

TRAY AMPACITY DESIGN

Figure 1

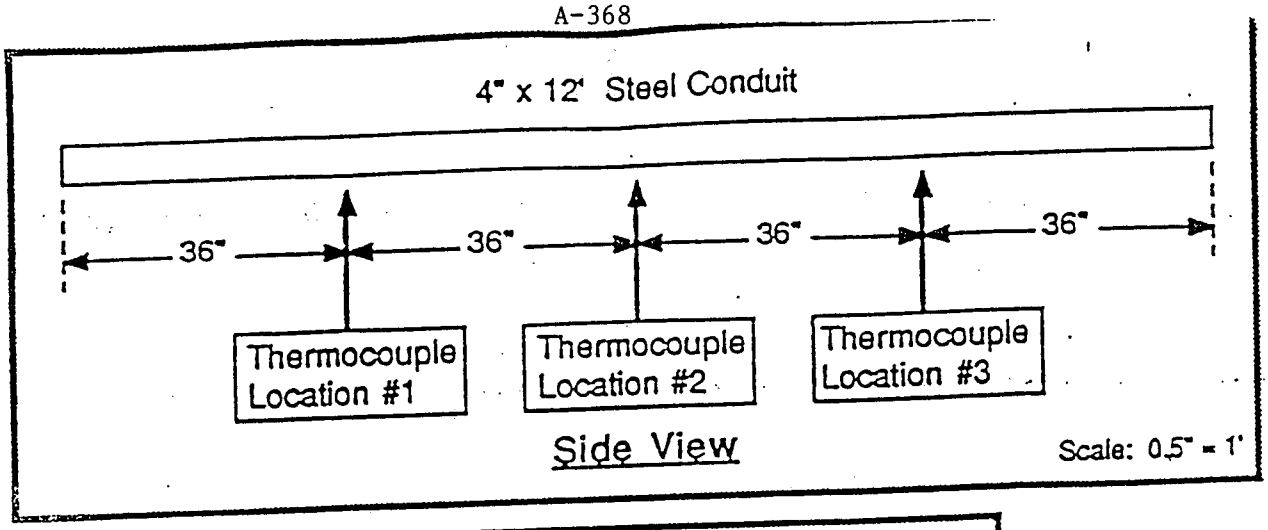

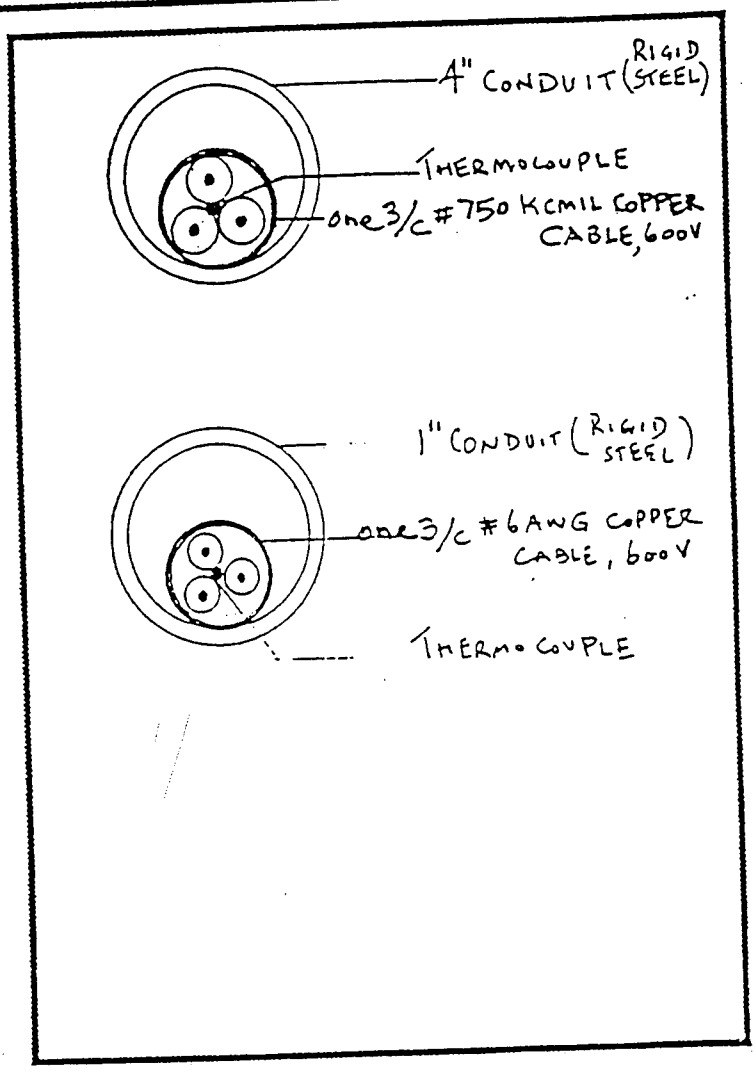

CONDUIT AMPACITY DESIGN

Figure 2

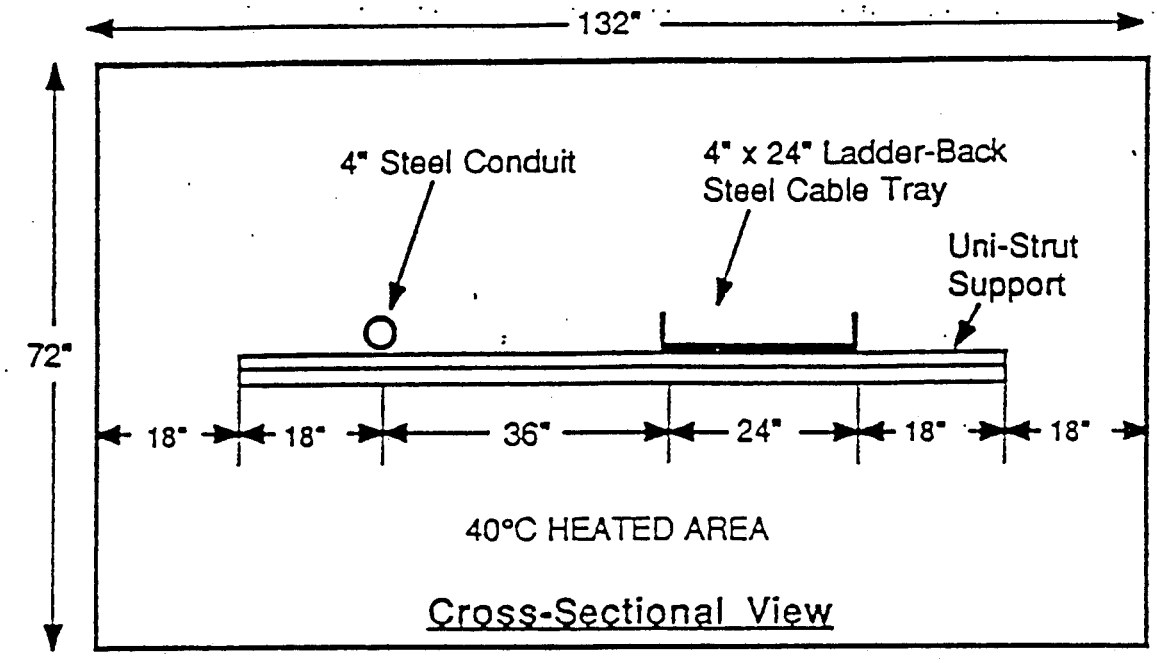

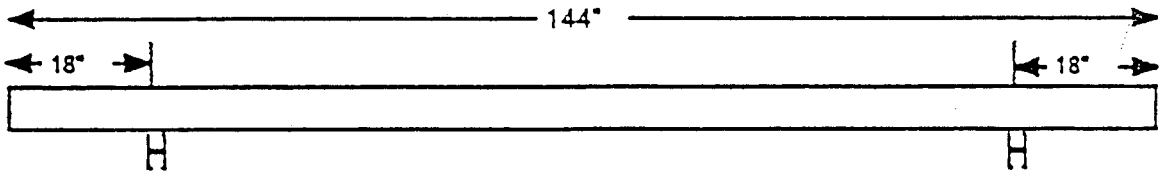

Conduit & Tray Support Points

CONDUIT AND TRAY AMPACITY DESIGN

Figure 3

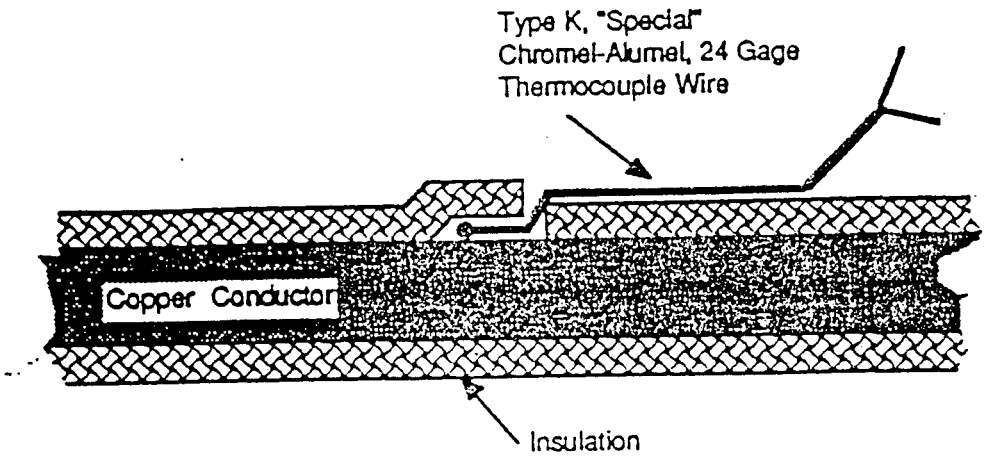

NOTE:

To attach thermo-junction to copper conductor, make an approximately 2 inch long slit in the outer wrap, expose the three conductors, locate the conductor to be instrumented, make a 1 inch slit in the insulation and insert the thermocouple junction in contact with the strands. Close the slit, reposition the wouter wrap and seal with a spiral wind of a single layer of glass-reinforced electrical tape.

Figure 4

P 848/D12 February 24, 1993

IEEE STANDARD

PROCEDURE FOR THE DETERMINATION OF THE AMPACITY DERATING OF FIRE PROTECTED CABLES

Sponsor

Insulated Conductors Committee of the

IEEE Power Engineering Society

Prepared by Task Force 12-45 of
Test and Measurements Subcommittee No. 12 of
Insulated Conductors Committee

Copyright 1993 by the Institute of Electrical and Electronics Engineers, Inc.
345 East 47th Street
New York, NY 10017, USA
All rights reserved.

This is an unapproved draft of the proposed IEEE Standard, subject to change. Permission is hereby granted for IEEE Standards Committee participants to reproduce this document for purposes of IEEE standardization activities. Permission is also granted for member bodies and technical committees of ISO and IEC to reproduce this document for purposes of developing a national position. Other entities seeking permission to reproduce this document for standardization or other activities, or to reproduce portions of this document for these or other uses, must contact the IEEE Standards Department for the appropriate license. Use of information contained in this unapproved draft is at your own risk.

IEEE Standards Department
Copyright and Permissions
445 Hoes Lane, P.O. Box 1331
Piscataway, NJ 08855-1331, USA

Foreword

(This Foreword is not a part of IEEE Std. P 848/D12, IEEE Standard - Procedure for the Determination of the Ampacity Derating of Fire Protected Cables)

Many cable installations in nuclear and fossil fuel generating stations require the installation of fire stop, fire protective materials, coating, and electrical separation wrap materials over the cables or the raceway for fire protection or electrical separation purposes. 10CFR50 Appendix R for nuclear plants may require some electrical circuits enclosed in a fire protective material. IEEE 634-1976 specifies requirements for cable penetration fire stops at fire rated walls and floors. Compliance with IEEE 384-1992 may require installation of a wrap material over free air-drop cables or solid covers on cable trays.

Building codes for commercial and industrial facilities in some states require power cables, used in emergency power systems, to remain functional during a fire exposure. This may also necessitate the use of the fire protective material.

As discussed in IEEE 422 and IEEE 690, utility generating stations use cable ampacities provided in ICEA P-46-426 for conduits, spaced cable tray installations and duct bank installations. ICEA P-54-440 is used for cable installation in random filled open-top trays. Commercial, industrial and non-utility owned generating stations utilize cable ampacities published in NFPA-70 (National Electric Code). The National Electric Code permits the use of ICEA P-46-426 and ICEA P-54-440 under the direction of engineers

Fire-protection related products may reduce the heat transfer characteristics associated with the ampacities provided in ICEA P-46-426 and ICEA P-54-440. In future revisions, these ampacity standards may incorporate these new installation conditions on cable ampacity. Not all products, however, may be covered by changes in the ampacity standards due to their limited use to the generating station market. Hence, ampacity testing to determine ampacity derating of fire protected cable systems is necessary.

Several analytical cable ampacity methods are listed in the bibliography to address fire stops, tray enclosure materials, and cable wrap material. The user may consider the applications of these analytical methods to avoid testing of minor differences in the installation of a given product.

Copyright © 1993 IEEE. All rights reserved
This is an unapproved IEEE Standards Draft, subject to change

This standard was prepared by the Task Group on Procedure for the Determination of the Ampacity Derating of Fire Protected Cables, Subcommittee on Tests and Measurements, Insulated Conductors Committee. The membership of the working group during the preparation of this draft was:

A.K. Gwal, Chair
J.L.White, Vice Chair

T.J. Al-Hussaini
P.Bhatia
K.Brown
E.A.Capouch
E.J.Coffey
E.J.D'Aquanno
J.Daly
P.A.Giaccaglia
A.Hiranandani
A.E.Kollar
R.Licht
J.E.Merando
K.A.Petty
K.W.Prier
D.N.Priest
P.D.Skelly
M.Spurlock
W.Torok
F.W.Van Nest
J.G. Waligorski

Copyright © 1993 IEEE. All rights reserved
This is an unapproved IEEE Standards Draft, subject to change

TABLE OF CONTENTS

Section		Page
1	Overview	7
1.1	Purpose.	7
1.2	Scope.	7
2	References	8
3	Definitions	9
4	Test Description	9
4.1	General	9
4.1.1	Applicability	9
4.1.2	Method of Testing	10
4.2	Test Specimens - Protected Cable Systems	10
4.2.1	Cable Selection	10
4.2.2	Cable Fill	10
4.2.3	Conduit	10
4.2.4	Tray	11
4.2.5	Free-Air Drop	11
4.2.6	Fire Protective Material	11
4.3	Test Specimens - Cable Penetration Fire Stop	11
4.3.1	Cable Selection	11
4.3.2	Cable Fill	12
4.3.3	Conduit	12
4.3.4	Tray	12
4.3.5	Floor/Wall Assembly	12
4.3.6	Fire Stop Design	12
4.4	Test Facility	13
4.4.1	Test Enclosure	13
4.4.2	Test Specimen Installation	13
4.4.2.1	Tray	13
4.4.2.2	Conduit	13
4.4.2.3	Free-Air Drop	13
4.4.2.4	Cable Penetration Fire Stops	14
4.4.2.5	Orientation	14
4.4.2.6	Installation of Fire Protective Systems	14
4.4.3	Thermocouple Selection and Placement	14
4.5	Test Procedure	15
4.5.1	Baseline Evaluation	15

Copyright © 1993 IEEE. All rights reserved
This is an unapproved IEEE Standards Draft, subject to change

4.5.2 Current Source 15
4.5.3 Temperature Measurement 15
4.5.4 Enclosure Temperature 17

5 Evaluation of Test Results 23

5.1 Normalizing Test Results 23

5.2 Ampacity Derating Factor 23

6 Documentation of Testing 24

7 Bibliography 25

Copyright © 1993 IEEE. All rights reserved
This is an unapproved IEEE Standards Draft, subject to change

TABLE OF CONTENTS (cont)

Section | Page

FIGURES

FIG 4-1 Tray Configuration - Protective Cable System 18
FIG 4-2 Conduit and Free-Air Drop Configurations - Protective Cable System 19
FIG 4-3 Configuration- Cable Penetration Fire Stop 20
FIG 4-4 Enclosure and Support Requirements 21
FIG 4-5 Thermocouple Attachment to Conductor 22

Copyright © 1993 IEEE. All rights reserved
This is an unapproved IEEE Standards Draft, subject to change

1 Overview

1.1 **Purpose.** The purpose of this standard is to provide a test procedure for use in establishing the ampacity or ampacity derating factor for cables installed in fire protected conduits, trays, or free air-drops, cable penetration fire stops, or electrical separation wrap systems.

1.2 **Scope.** This standard provides a detailed test procedure for determining the ampacity or derating factor in the following cable installation configurations:

(1) Block-out or sleeve type cable penetration fire stops.

(2) Conduits covered with a protective material.

(3) Tray covered with a protective material.

(4) Tray directly covered or coated with a fire-retardant material.

(5) Free-air drops enclosed with a protective material.

The standard is applicable to cables installed and sized to ICEA P-46-426 for conduits and free air drops, and ICEA P-54-440 for cable tray. ICEA P-46-426 does provide ampacities for cables in a tray with a fixed spacing and may be used for cable penetration fire stop configurations only.

This standard does not endorse the use of or provide application guidance for the installation of cable penetration fire stops and fire protective materials. Cable designs are available which can withstand and remain functional during direct exposure to a fire. The user should refer to IEEE 634 for the qualification requirements of cable penetration fire stops.

Copyright © 1993 IEEE. All rights reserved
This is an unapproved IEEE Standards Draft, subject to change

2 References

ANSI-IEEE Std 100-1990, Standard Dictionary of Electrical and Electronics Terms 4th Edition.

Cross-Linked Thermosetting Polyethylene-Insulated Wire and Cable for the Transmission and Distribution of Electrical Energy. Washington, D.C.: National Electrical Manufacturers Association, 1990. ICEA S-66-524 (NEMA WC 7-1988).

Ethylene Propylene Rubber-Insulated Wire and Cable for the Transmission and Distribution of Electrical Energy. Washington, D.C.: National Electrical Manufacturers Association, 1989. ICEA S-68-516 (NEMA WC 8-1988).

ICEA Standard for Power Cable Ampacities. Washington, D.C.: National Electrical Manufacturers Association, 1962. Reprinted by IEEE under S-135. ICEA P-46-426.

ICEA Standard for Ampacities - Cables in Open-Top Cable Trays. Washington, D.C.: National Electrical Manufacturers Association, 1991; NEMA WC-51. ICEA P-54-440.

IEEE Std. 384-1992, IEEE Standard Criteria for Independence of Class 1E Equipment and Circuits.

IEEE Std. 422-1986, IEEE Guide for the Design and Installation of Cable Systems in Power Generating Stations.

IEEE Std. 690-1984, IEEE Standard for the Design and Installation of Cable Systems for Class IE Circuits in Nuclear Power Generating Stations.

IEEE Std. 634-1978, IEEE Standard Cable Penetration Fire Stop Qualification Test.

Rubber-Insulated Wire and Cable for the Transmission and Distribution of Electrical Energy. Washington, D.C.: National Electrical Manufacturers Association, 1980. ICEA S-19-81 (NEMA WC 3-1980).

The National Electric Code, National Fire Protection Association, NFPA 70-1990, Quincy, MA.

Copyright © 1993 IEEE. All rights reserved
This is an unapproved IEEE Standards Draft, subject to change

3 Definitions

3.1 ampacity derating factor: A numeric value representing the fractional reduction from a base ampacity cable rating. Ampacity derating factors are associated with specific installation conditions not presently addressed in the base ampacity.

3.2 ampacity correction factor: A numeric value equal to one minus the ampacity derating factor.

3.3 cable penetration fire stop: Material, devices or an assembly of parts providing ;cable penetrations through fire-rated walls, floors, floor-ceiling assemblies, and maintaining required fire rating.

3.4 cable tray: A raceway resembling a ladder and usually constructed of metal. Other styles of trays include solid-bottom, and channel type.

3.5 fire protected cable systems: Cable systems to which a fire protective enclosure material has been applied either in direct contact with the cables or applied over the raceway to protect cables from fire.

3.6 fire retardant coatings: Material applied along the length of cables or in localized areas, as deemed necessary, to retard the flame propagation properties of cables in trays.

3.7 raceway: Any channel that is designed and used expressly for supporting or enclosing wires, cable or bus bars. Raceways consist primarily of, but are not restricted to, cable trays and conduit.

4 Test Description

4.1 General

4.1.1 Applicability This method shall apply to cables manufactured in accordance with either ICEA S-66-524, ICEA S-19-81, or ICEA S-68-516 and rated either 600, 2 000, 5 000, 8 000, or 15 000 V. This test is limited to cables installed in the following configurations:

(1) Tray with a fire protected cable system where cables are arranged consistent with ICEA P-54-440.

Copyright © 1993 IEEE. All rights reserved
This is an unapproved IEEE Standards Draft, subject to change

(2) Conduit or free air drop with a fire or electrical separation protected cable system.

(3) Block-out, conduit or sleeve type penetration type fire stop.

4.1.2 **Method of Testing** Cable ampacity or ampacity derating factor shall be established by testing in accordance with the configurations shown in Figures 4-1, 4-2, and 4-3. Test results may also be used to confirm analytical heat transfer models.

4.2 Test Specimens - Protected Cable Systems

4.2.1 **Cable Selection** The cables used in the ampacity tests shall have copper conductor(s), 600 V rated cross-linked polyethylene or ethylene-propylene rubber insulation and a chlorosulfonated polyethylene jacket. Depending on the specific test (as outlined below) the cables shall be rated 600 V and of either 3/C No.6 AWG, 3- 1/C 750 kcmil construction. If a user opts to test using conduits sizes other than 1 and 4 inch (see section 4.2.3) then a 3/C, triplex or 3-1/C cable shall be chosen to achieve the maximum allowable fill. When 1/C cables are used for conduit or free air drops, they shall be tie wrapped at intervals not to exceed 2 feet.

4.2.2 **Cable Fill** The ampacity of a protected cable system is dependent on a number of factors, including: the actual cable depth in a tray, the number of conductors in a conduit and free air-drop, and the conductor size of the cables. The ampacity derating factor of the barrier/wrap systems, however, is not dependent on the these conditions. In order to avoid introducing other types of derating factors, e.g. multiple conductors in a conduit or close conduit grouping factors, the following cable fill conditions shall be used.

(1) Random filled tray: Three layers of 3/C No.6 AWG cables, 0.75 inch diameter, 32 cables per layer, resulting in a depth of 2.25 inches for the 24 inch wide tray.

(2) Conduit: Single circuit of three conductors sized to match the conduit in accordance with NFPA-70 or the largest commercially available size, not to exceed 750 kcmil, generally used in conduits. (See Section 4.2.1)

(3) Free-Air Drop: Fill requirements do not apply.

4.2.3 **Conduit** Conduit ampacity tests shall utilize 1 and 4 inch rigid steel conduits. Tests conducted using these two sizes shall be considered representative of all sizes provided that the fire protective system installation methods and configurations are consistent across the entire size range. Where the installation methods, configurations, or fit differ according to conduit size the user shall test sizes to bound the

Copyright © 1993 IEEE. All rights reserved
This is an unapproved IEEE Standards Draft, subject to change

specific application. Conduits shall be a minimum of 12 ft long. The conduit shall be isolated from its supporting structure by wooden blocks.

In addition to the conduit, the junction boxes and pull boxes may also be enclosed with a protective material. Since the surface area of the boxes is significantly greater than the conduit, heat transfer is improved proportionally. Therefore, junction boxes and pull boxes do not need to be included in the ampacity test.

4.2.4 **Tray** A commercially available 4 inch deep - 24 inch wide ladder-back style steel cable tray, a minimum of 12 ft long shall be used. The tray shall be isolated from the support by wooden blocks.

4.2.5 **Free-Air Drop** Ampacity tests shall be conducted on free air drop configurations consisting of 1-3/C No.6 AWG and 3-1/C 750 kcmil, respectively. Tests conducted using these two sizes shall be considered representative of all sizes provided that the fire protective system installation methods and configurations are consistent across the entire size range. Where the installation methods, configurations, or fit differ according to size the user shall test sizes to bound the specific application. Free air drops shall be a minimum of 12 ft long. The test specimen shall be supported to prevent sagging and shall be isolated from its supporting structure by wooden blocks.

4.2.6 **Fire Protective Material** The protective material shall be representative of the installed product at maximum thickness. If the product is typically applied in a non-uniform manner, e.g. overlap joint when product is butted, then these sections shall be included in the test.

Some fire-protected cable systems utilize an end seal where the barrier or wrap ends in order to prevent the intrusion of hot gases or fire into the end of the tray or conduit. If end seal is less than six inches, then the seal may be excluded from the test. Otherwise, the end seal should be treated and tested in a similar manner to cable fire stop, except the wall section is excluded.

4.3 Test Specimens - Cable Penetration Fire Stop

4.3.1 **Cable Selection** The ampacity of the cable in a cable penetration fire stop varies with cable conductor size, conductor material, and manner of cable installation outside the fire stop. Tests conducted using a 600 V 3/C No. 12 AWG, aluminum conductor with cross-linked polyethylene insulation and an overall chlorosulfonated polyethylene jacket shall be considered representative of other voltage ratings, conductor sizes and copper or aluminum conductors installed in random filled tray. Tests on single conductor 2/0 AWG aluminum conductor 600 V, with cross-linked polyethylene insulation and a chlorosulfonated polyethylene jacket shall be considered to be representative of cables installed in trays with maintained spacing. Tests performed using copper

Copyright © 1993 IEEE. All rights reserved
This is an unapproved IEEE Standards Draft, subject to change

conductor cables may be used only to establish the derating factors for applications using copper conductor.

In cable bus applications, where larger conductor sizes are generally used, cable specimen shall be the smallest conductor in the anticipated use range. Aluminum conductor material shall be used, unless design is limited to copper conductors.

4.3.2 Cable Fill The tray shall be filled to a one inch depth. The corresponding current in ICEA P-54-440 shall be applied.

Ampacity tests on fire stops installed in trays with maintained spacing (per ICEA P-46-426) shall be conducted on a single layer of 2/0 cables separated by one diameter.

Plant specific design conditions may be tested. However, the results may not be extrapolated to lower percentage filled cable trays.

Conduit fill shall be identical to that specified in Section 4.2.2.

4.3.3 Conduit The conduit specimen shall be identical to that used in section 4.2.3., except that the length of the conduit shall be twenty feet. No fire protective material shall be applied to the conduit other than the fire stop.

4.3.4 Tray Tray specimen shall be identical to that used in section 4.2.4, except the length of the tray shall be twenty feet plus the width of the wall. No fire protective material shall be applied to the tray other than the fire stop.

4.3.5 Floor/Wall Assemblies The type of floor/wall construction and thickness affect the ampacity derating of the system. Thicker floors/walls shall be representative of thinner floors/walls of the same construction. Floors/walls constructed of lower thermal conductive materials shall be representative of floors/walls of higher thermal conductive materials.

The floor/wall assembly must maintain a minimum of 24 inches from its outer edge to the edge of the blockout.

For floor assemblies, the raceways may contain 90 degree bends located at a minimum of 24 inches from each surface of the floor assembly.

4.3.6 Fire Stop Design The fire stop configuration to be ampacity tested shall be representative of the maximum permitted installation tolerances, in contrast to fire tests which are typically conducted on fire stops at the minimum tolerance.

4.4 Test Facility

Copyright © 1993 IEEE. All rights reserved
This is an unapproved IEEE Standards Draft, subject to change

4.4.1 Test Enclosure The ampacity test shall be conducted in an enclosure as shown in figure 4-4, such that the temperature around the specimen shall be controlled to 40°C +/- 2°C. The enclosure shall ensure an even temperature and shall limit drafts on the test specimen. The temperature inside the enclosure shall be measured at no less than three places one foot from the specimen, and in the horizontal plane of the test specimen. The temperature of the enclosure shall be taken as the average of the steady state measurements.

4.4.2 Test Specimen Installation

4.4.2.1 Tray The tray is to be uniformly loaded with a single type of cable. The cables shall be installed in an orderly, symmetric manner, so as to limit the flow of air through the cables and to ensure repeatability. Cable tie wraps shall not be used within the tray.

The cables shall be connected as a single series electrical circuit.

When testing the protected cable systems, a section of insulating blanket shall be placed at the ends of the tray to minimize axial heat flow, such that the average values for the thermocouples at locations 1 and 3 (see Figure 4-1) are within +/- 4°C of the average value for location 2.

4.4.2.2 Conduit The cables shall be pulled into the conduit after installation of the thermocouples. No pulling lubricant shall be used. When three single conductor cables are utilized for the conduit tests, the cables shall be bundled with stainless steel tie wraps or glass cloth electrical tape to ensure thermocouple placement is maintained during insertion or removal.

The cables shall be connected as a single series electrical circuit.

A section of insulating blanket shall be placed at the ends of the conduit to minimize axial heat flow, such that the average values for the thermocouples at locations 1 and 3 (see Figure 4-2) are within +/- 4°C of the average for location 2.

4.4.2.3 Free-Air Drop The cables shall be connected as a single series electrical circuit. When three single conductor cables are utilized for these tests, the cables shall be bundled with stainless steel tie wraps or glass cloth electrical tape to ensure thermocouple placement is maintained.

A section of insulating blanket shall be placed at ends of the free air-drop to minimize axial heat flow, such that the average values for the thermocouples at locations 1 and 3 (see Figure 4-2) are within +/- 4°C of the average for location 2.

Copyright © 1993 IEEE. All rights reserved
This is an unapproved IEEE Standards Draft, subject to change

4.4.2.4 **Cable Penetration Fire Stop** The cables and raceway penetrating the fire stop floor/wall shall be installed in an identical fashion as during fire testing. This may include special spacing requirements. If the fire stop design permits installation of the cables on the tray rungs or directly on the blockout surface, the bounding condition is considered to be with the cables placed on the tray rungs.

4.4.2.5 **Orientation** The fire protected raceway test specimens shall be mounted horizontally in order to model worst case orientation and to prevent a "chimney-effect." In the case of fire stop tests, open ends of enclosed raceways must be sealed to eliminate air movement.

4.4.2.6 **Installation of Fire Protective Systems** The tray and conduit is to be raised off its support after completion of the baseline tests. The protective system shall then be applied in accordance with the method established in the fire or electrical separation testing. The entire assembly shall be lowered back onto the supports while ensuring the assembly is not cracked or otherwise distorted. If the protective system can be removed without disturbing the cables or thermocouple placement, then the baseline tests may be performed before or after testing the protective cable system.

If the product undergoes a curing operation, the test specimen's dry state shall be established by the manufacturer and achieved prior to the test through natural or artificial drying.

If the product is reactive at temperatures below 90°C, then the equilibrium time must be extended based on specific analysis.

4.4.3 **Thermocouple Selection and Placement** Thermocouples shall be a maximum of 24 AWG, Type T special grade - Copper Constantan with an accuracy of +/- 0.5°C or other thermocouple types which have been calibrated to the same level of accuracy. Thermocouple wire shall have waterproof insulation. Thermocouples shall be placed directly against the conductor.

To attach the thermojunction to the cable, make an approximately 2 inch long slit in the outer jacket of the cable, to expose the insulated conductors. Make a one inch slit in the insulation as shown in Figure 4-5. Insert the thermocouple junction in direct contact with the conductor strands. For three conductor cables, close the insulation slit and seal with a single layer of glass-reinforced electrical tape. For single and three conductor cables, reposition the outer jacket and seal with a single layer of glass-reinforced electrical tape.

The test is intended to identify the temperature of the hottest conductor within the center of the protected cable system and cable penetration fire stop. A set of thermocouples shall be installed at each of the vertical

Copyright © 1993 IEEE. All rights reserved
This is an unapproved IEEE Standards Draft, subject to change

planes along the length of the cable as shown in Figures 4-1, 4-2, and 4-3. Conduit and free-air drops shall have the thermocouples placed on all three conductors. Within the tray assembly, thermocouple leads shall remain in the layer in which they are installed and be routed out the end of the tray in the interstices of the cable mass. For fire protected raceways, the following number of thermocouples shall be placed in each vertical plane:

(1) tray configuration - 5

(2) conduit and free-air drop - 3

For ampacity tests of tray penetration fire stops, 5 thermocouples shall be placed on the conductors in the fire stop in accordance with Figure 4-1. One additional thermocouple shall be placed at 2 foot intervals on one conductor of the center cable in the middle layer on each side of the firestop. (Figure 4-3)

For ampacity tests of conduit or free-air drop penetration fire stops, 3 thermocouples shall be placed on the conductors in the fire stop in accordance with Figure 4-2. One additional thermocouple shall be placed at 2 foot intervals on each side of the fire stop.

4.5 Test Procedure

4.5.1 **Baseline Evaluation** At least one baseline test for each system, i.e. tray, conduit, free air drop, shall be conducted in order to establish baseline ampacities. Baseline evaluation for a tray assembly must be performed on the same physical specimen used for the derating test. Baseline and derating evaluations for conduits and free-air drops shall be performed using the same instrumented cable set.

4.5.2 **Current Source** The circuit shall be energized with a 60 Hz, single phase source sufficient to cause the conductor to reach 90°C at location 2 in Figures 4-1, 4-2, and location 1 in Figure 4-3. The current shall be measured to an accuracy of +/- 0.5%. The use of a constant-current amplifier is recommended since the increasing temperature changes the circuit load, i.e. conductor resistance. Alternatively, process control devices can be used to generate and maintain the current source.

4.5.3 **Temperature Measurement** All temperatures shall be recorded at intervals no greater than one minute. The current in each test circuit shall be adjusted to achieve a hot spot conductor temperature of 90°C +/- 1°C at location 2 for the protected cable systems and location 1 for cable penetration fire stop. The average temperature of thermocouple locations 1 and 3 for the protected cable systems shall be within +/- 4°C of the average temperature reading at location 2. No restrictions are placed on the temperature readings at locations outside the cable penetration fire stop.

Copyright © 1993 IEEE. All rights reserved
This is an unapproved IEEE Standards Draft, subject to change

The cable circuit is considered to be have reached steady state condition when:

(1) A minimum of three hours since the last adjustment of current level or perturbation of the system occurred, and

(2) The rate of change of the average of thermocouple reading at hottest spot (location 2 for Figures 4-1 and 4-2, and location 1 for Figure 4-3) does not exceed +/- 0.2°C per hour for conduit, tray, and free-air drop.

Perturbation of the system conditions includes current adjustment, change in the internal temperature of the enclosure, and addition or removal of insulation on the ends of the tray, conduit or free-air drop. Minor adjustment of current ($\leq$ 0.5%) required to keep the current constant is not considered a perturbation of the system.

In order to statistically assure thermal equilibrium, the conductor temperatures shall be averaged at each sampling period. A linear regression analysis using the least-squares method shall be performed on the data obtained over the preceding 60 minute period. The slope of the line shall be expressed in units of °C per hour. When the absolute value of the slope becomes less than 0.2, equilibrium has been reached.

The degrees of freedom obtained by averaging many thermocouple locations, allows the precision to exceed the +/- C limit of any one thermocouple.

The equations for a linear regression using the least squares fit method are shown below:

$$Y = mX + b \tag{1}$$

$$X = \sum \frac{X}{n} \tag{2}$$

$$Y = \sum \frac{Y}{n} \tag{3}$$

$$m = \frac{\sum XY - \frac{\sum X \sum Y}{n}}{\sum X^2 - \frac{(\sum X)^2}{n}} \tag{4}$$

Copyright © 1993 IEEE. All rights reserved
This is an unapproved IEEE Standards Draft, subject to change

$$b = Y - m X \tag{5}$$

Where:

Y	is the average conductor temperature C
X	is the time increment (min)
m	is the slope of line (C/min)
b	is the Y-axis intercept, C

4.5.4 Enclosure Temperature The temperature within the test enclosure shall be controlled to 40 +/- 2 C. Some induced air movement within the enclosure is necessary to achieve uniform steady-state temperatures. Care must be taken to avoid direct air currents against the test specimens. The method of ambient temperature control within the test enclosure is important. Care must be taken to avoid any additional heat loading on the cables by radiation from a heat source.

Copyright © 1993 IEEE. All rights reserved
This is an unapproved IEEE Standards Draft, subject to change

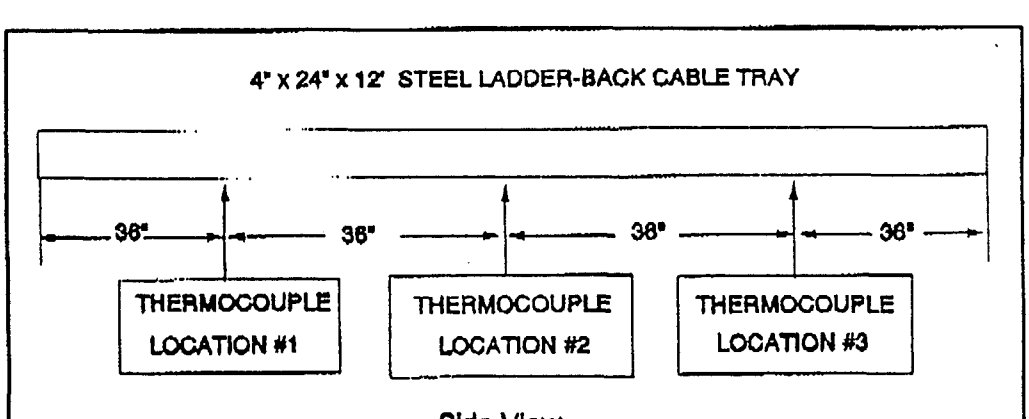

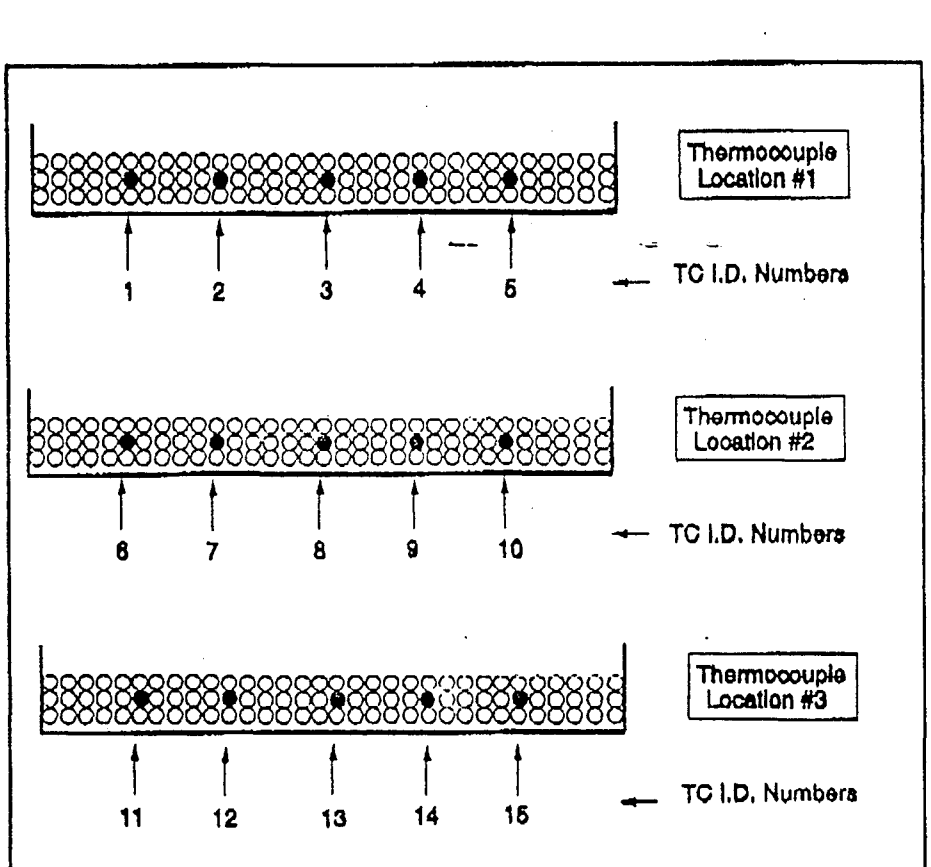

FIG 4-1
Tray Configuration - Protective Cable System

Copyright © 1993 IEEE. All rights reserved
This is an unapproved IEEE Standards Draft, subject to change

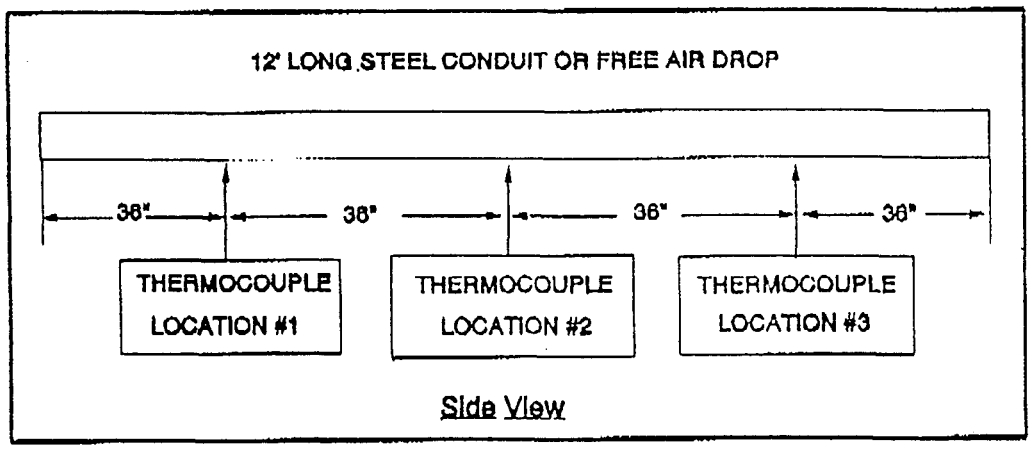

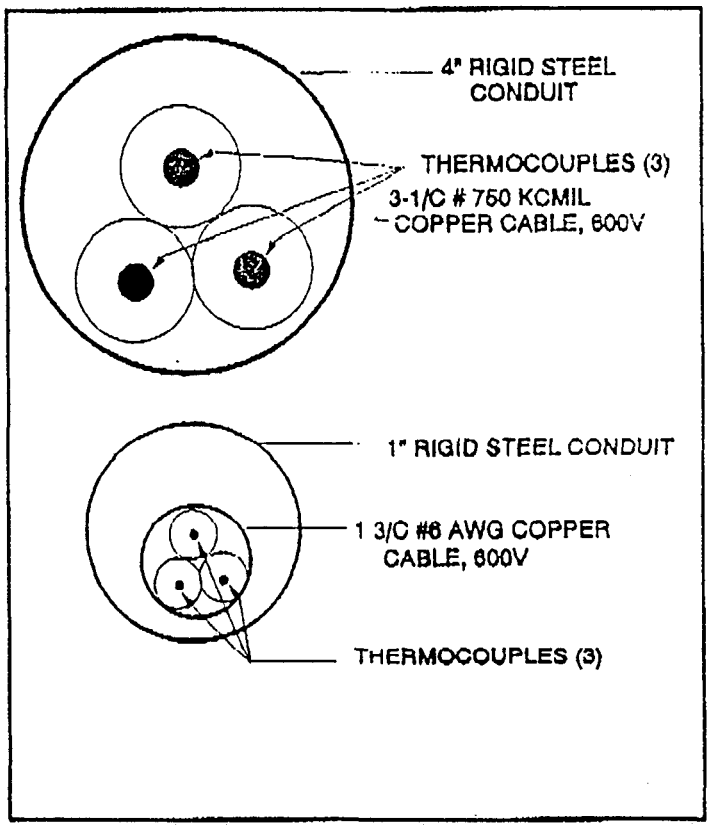

FIG 4-2
Conduit and Free-Air Drop Configurations
- Protective Cable System

Copyright © 1993 IEEE. All rights reserved
This is an unapproved IEEE Standards Draft, subject to change

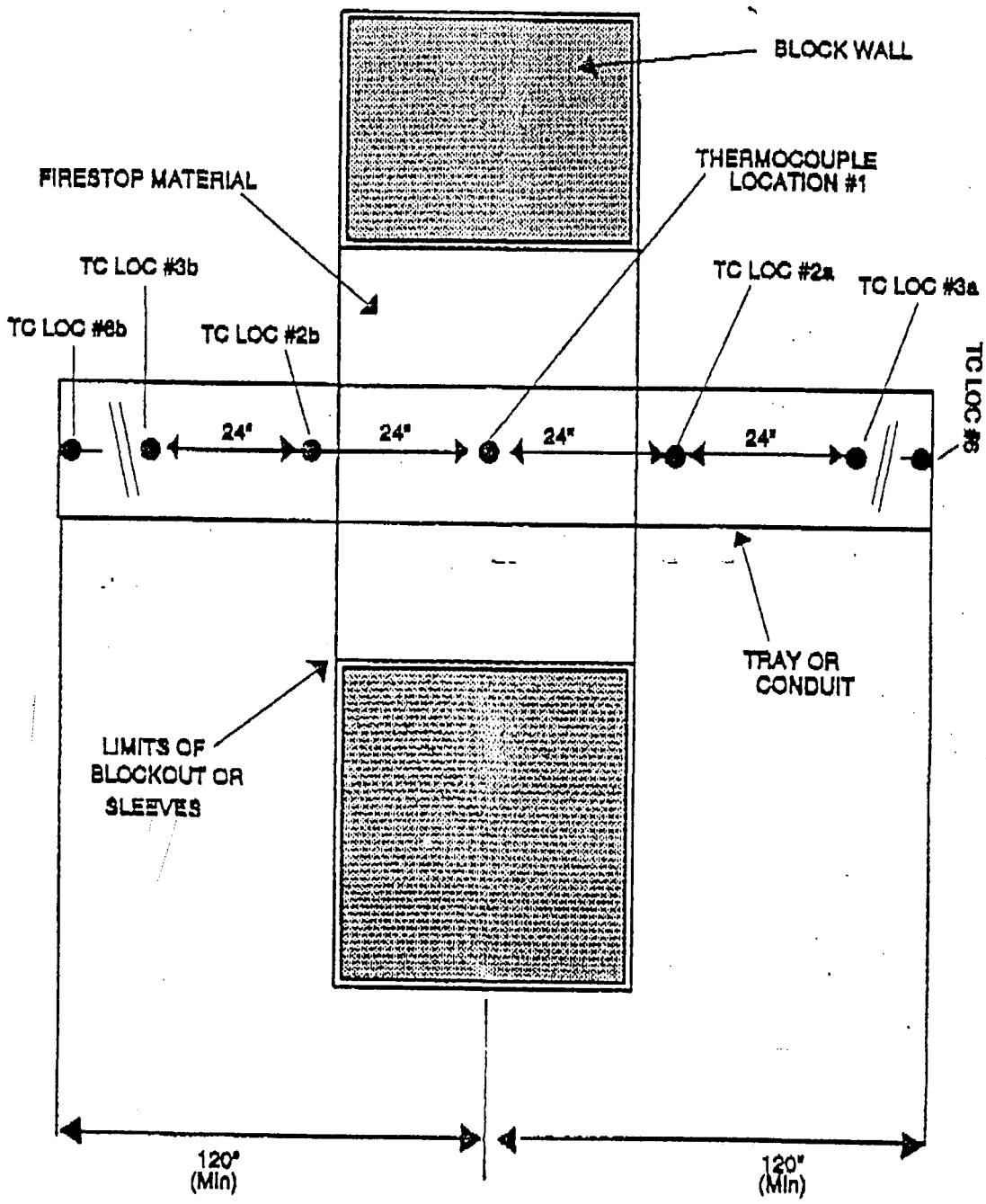

FIG 4-3
Configuration- Cable Penetration Fire Stop

Copyright © 1993 IEEE. All rights reserved
This is an unapproved IEEE Standards Draft, subject to change

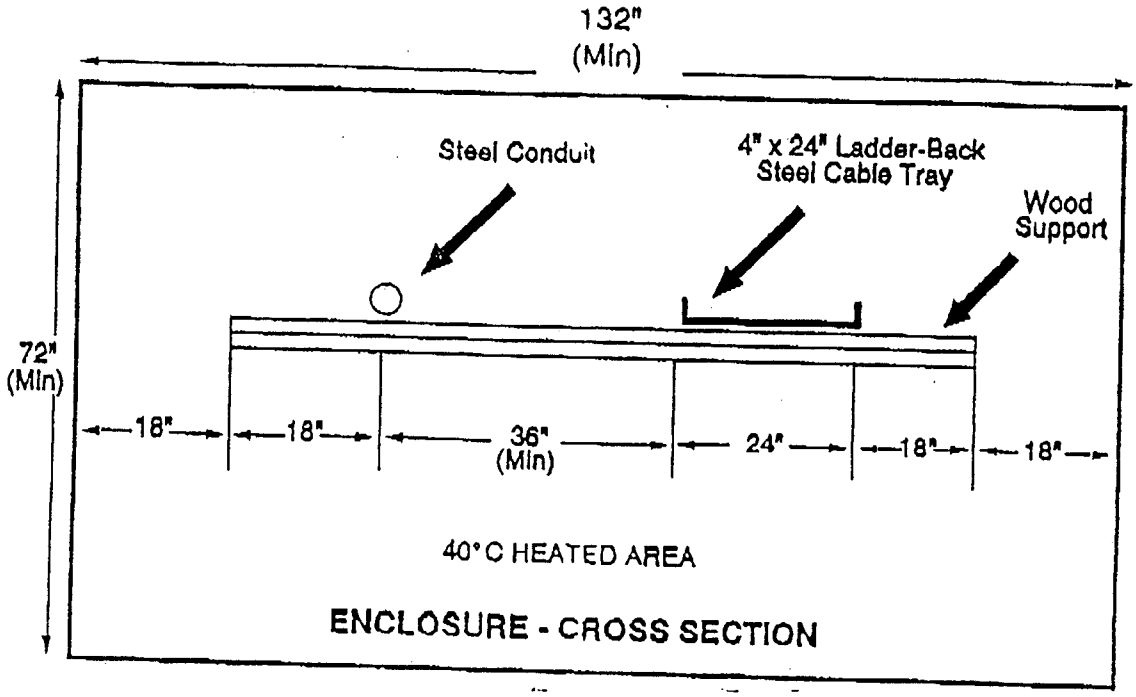

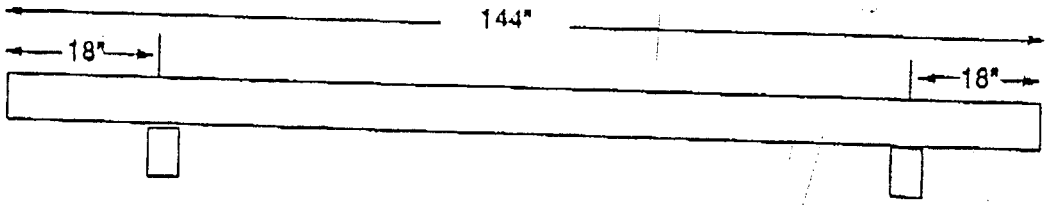

CONDUIT & TRAY SUPPORT POINTS

FIG 4-4
Enclosure and Support Requirements
- Protective Systems

Copyright © 1993 IEEE. All rights reserved
This is an unapproved IEEE Standards Draft, subject to change

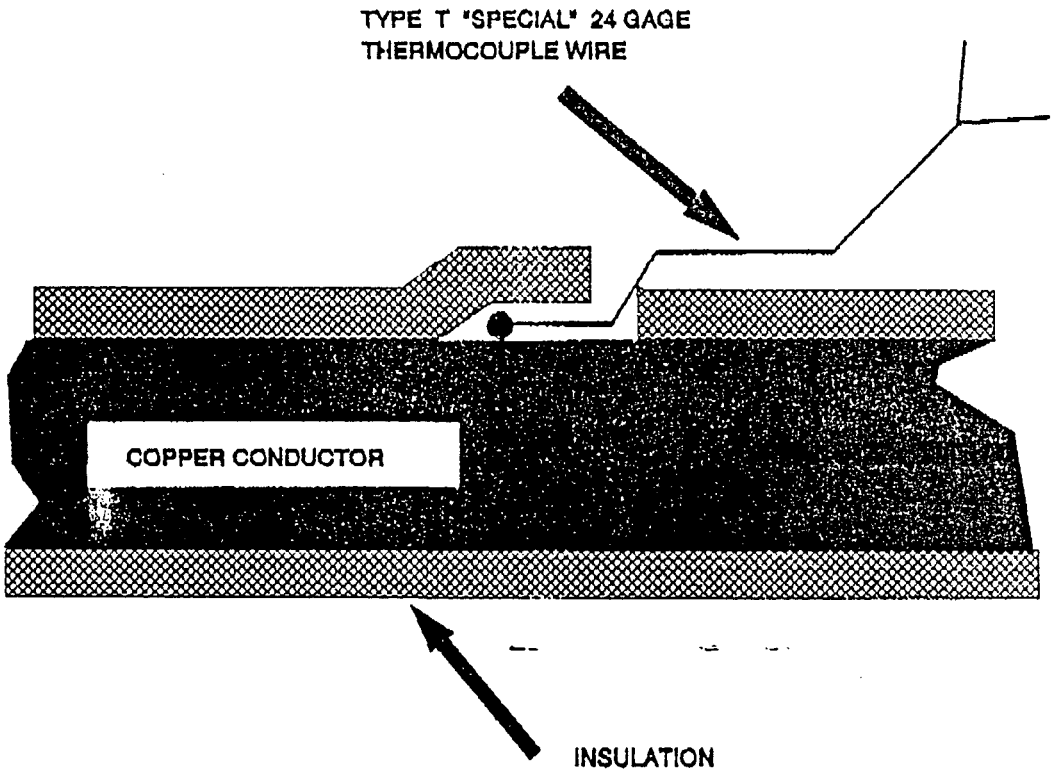

FIG 4-5
Thermocouple Attachment to Conductor

Copyright © 1993 IEEE. All rights reserved
This is an unapproved IEEE Standards Draft, subject to change

5 Evaluation of Test Results

5.1 Normalizing Test Results

After equilibrium has been achieved, the final conductor temperature and the ambient temperature may not match 90 C and 40 C respectively. The results of the baseline and the fire protected cable system tests must be normalized using equation 6 below. The conductor temperature shall be the hottest conductor temperature at location 2 for the protective cable system and location 1 for cable penetration fire stop. The final temperatures must be within the limits established in Section 4.5.4 and 4.5.3.

$$I' = I\sqrt{\frac{(Tc' - Ta')\ (\alpha + Tc)}{(Tc - Ta)\ (\alpha + Tc')}} \qquad (6)$$

where

I	test current at equilibrium, amperes
Tc	hottest conductor temperature at center at equilibrium, C
Ta	measured enclosure ambient temperature, C
I'	normalized current, amperes
Tc'	normalized conductor temperature = 90 C
Ta'	normalized ambient temperature = 40 C
alpha	234.5 for copper or 228.1 for aluminum

5.2 Ampacity Derating Factor

Using the normalized current, as determined from section 5.1, an ampacity derating factor can be calculated using the results of the baseline test and the protected cable system or cable fire stop. The ampacity derating factor (ADF) and ampacity correction factor (ACF) shall be calculated using equations 7 and 8. The user may find it may convenient to express the ampacity results as ampacity correction factor (ACF) for calculation purposes. ACF is applied in a similar fashion as conduit grouping factors and ambient temperature correction factor as shown in ICEA P-46-426.

$$ADF = \frac{(Io - If)}{Io}100 \qquad (7)$$

Copyright © 1993 IEEE. All rights reserved
This is an unapproved IEEE Standards Draft, subject to change

$$ACF = \frac{If}{Io} \quad (8)$$

Where

Io	is the normalized current for the baseline condition, amperes
If	is the normalized current for the passive fire protected cable system or cable penetration fire stop system
ADF	is the ampacity derating factor, %
ACF	is the ampacity correction factor

Ampacity derating factors shall be expressed in conjunction with reference to its baseline ampacity standard. This is especially important for cable penetration fire stops where the cable installation method outside the wall has a major influence on the resulting derating factor. Cable Fire stop ampacity derating factor is also restricted in terms of conductor size and material.

Examples illustrating how the ampacity derating factors must be expressed are shown below.

(1) ADF = 18 %, Floor Assembly-Fire Stop Penetration, Product design AAA, applied against ICEA P-46-426 "conduit in air ampacities" for 12 AWG aluminum or copper conductors and larger.

(2) ADF = 7 %, Wall Assembly Fire Stop Penetration, Product design AAA, applied against ICEA P-46-426 "conduit in air ampacities" for 1000 kcmil copper conductors or 1250 kcmil aluminum conductor and larger.

(3) ADF = 20 %, Fire Protective Material - Tray Application, Product design BBB, when applied against ICEA P-54-440.

(4) ADF = 18 %, Electrical Separation Wrap - Free Air Drop, Product design CCC, when applied against ICEA P-46-426 "in free air" ampacities.

6 Documentation of Testing

The test report and the resulting derating factor shall include the following documentation:

(1) Description of the test configuration

(2) Date of the test

(3) Location of the test

(4) Description of the test equipment and test articles

Copyright © 1993 IEEE. All rights reserved
This is an unapproved IEEE Standards Draft, subject to change

(5) Calibration documentation of all thermocouples

(6) Qualification and certification for test personnel

(7) Test procedures used.

(8) Ampacity values determined and accompanying equilibration temperatures.

(9) Provide quality control records for:

(a) Test article construction

(b) Qualification and certification for installation and inspection personnel

(c) Identification and installation of fire barrier material

(d) Thermocouple locations

(e) Cables, size, type, and location

(f) Actual tray and conduit cable fill, and calculated depth of cable fill as defined in ICEA P-54-440

(10) Computer printout and graphic results of the ampacity test

(11) All raw data

(12) 35 mm photographic coverage of the test project

(13) Documentation that product does or does not react at temperatures below 90°C.

(14) Documentation that moisture equilibrium has been achieved.

7 Bibliography

[B1] Stolpe, J., "Ampacities for Cables in Randomly Filled Trays", IEEE Transactions on Power Apparatus and Systems, Vol PAS 90, pp 962-973, 1971

[B2] Nemeth, C.W., RackLiffe, G.B., Legro, J.R., "Ampacites for Cables in Trays with Firestops" IEEE Transactions on Power Apparatus and Systems, Vol PAS 100, No. 7 July 1981

[B3] Herter, V.J., Barry, R.E., Began, T.A., "Ampacity Test of a Silicone Foam Firestop in a Cable Tray" IEEE Transactions on Power Apparatus and Systems, Vol PAS 100, No. 7 July 1981

[B4] Esteves, O.M., "Derating Cables in Trays Traversing Firestops or Wrapped Fireproofing" IEEE Transactions on Power Apparatus and Systems, Vol PAS 102, pp. 1478-1481, 1983

Copyright © 1993 IEEE. All rights reserved
This is an unapproved IEEE Standards Draft, subject to change

[B5] Petty, K.A. "Ampacity of Wrapped Cables" IEEE Transactions on Power Delivery Vol 3 No 1, January 1988

[B6] Hiranandani, A.K. "Rating Power Cables in Wrapped Cable Trays" IEEE Transactions on Power Delivery Vol 3 No 1, January 1988

[B7] Save, P., Engmann, G. "Fire Protection Wrapped Cable Tray Ampacity" IEEE Transactions on Power Generation Vol No , 1989

Copyright © 1993 IEEE. All rights reserved
This is an unapproved IEEE Standards Draft, subject to change

EXCEPTIONS TO IEEE P848/D11

Procedure for the Determination of the Ampacity Derating of Fire Protected Cables

1. Section 5.2.4 states the conduit shall be 12 feet long and supported 18 inches from each end.

   Exception: The conduit is 20 feet long and supported 5 feet from each end.

   Basis: The longer specimen will reduce the affects of heat transfer on the measured temperature. Draft 12 states a minimum of 12 feet.

2. Section 5.3.1 references Figure 3 which shows the enclosure width 132 inches.

   Exception: The enclosure width is 96 inches.

   Basis: The enclosure will be used only for conduit; no trays will be tested so the 96-inch enclosure will be sufficient.

3. Section 5.3.2.2 Part b states that 1-3 conductor 750 MCM copper cable will be used.

   Exception: Three single conductor 750 MCM cables will be bundled together to simulate 1-3 conductor.

   Basis: Draft 12 of the standard states that 3 single conductors can be used.

4. Section 5.3.2.5 states that Type K special grade thermocouples will be used.

   Exception: Type T thermocouples with an accuracy of ± .5°C will be used.

   Basis: Type T thermocouples verified to be within ± .5°C are more accurate than the type K special grade. Draft 12 of the standard states that Type T special grade thermocouples or a thermocouple of equivalent accuracy will be used.

5. Section 5.3.2.5 states that three thermocouples will be used to determine the conductor temperatures.

   Exception: Nine thermocouples will be used. Three thermocouples will be used in each conductor.

   Basis: Draft 12 states that three thermocouples will be used in each vertical plane.

EXCEPTIONS TO IEEE P848/D11 (CONTINUED)

Procedure for the Determination of the Ampacity Derating of Fire Protected Cables

6. Section 5.3.2.6 states the testing is to be sequential so that one conduit and cable is to be used for all of the testing.

   Exception Four 4" and four 1" conduits are being used for the test.

   Basis: The same instrumented cable set for the baseline and derating tests for each size conduit will be used as specified by draft 12. Different conduit specimens will be used since each Thermolag configuration has a 30-day curing period after installation.

7. Section 5.3.2.6 states that moisture content in percent moisture will be made on the Thermolag.

   Exception: The moisture content measurement will be made using a hand-held meter recommended by Thermal Science Incorporated (Thermolag manufacturer). Reference Attachment D, Page D-1. This instrumentation will not be traceable back to NIST.

   Basis: Draft 12 states that the moisture content will be reported to ensure that moisture equilibrium has been achieved.

8. Section 5.4.2 states the current value will be reported to 0.1 ampere, but no accuracy is stated.

   Exception: The accuracy for the current measurement will be +/- 1% of reading.

   Basis: Draft 12 states an accuracy of +/- 0.5% instead of an absolute current value. Per Attachment E, this value will be changed to +/- 1% in the final issue of P848.

9. Section 5.4.3 states that the rate of change will not exceed +/- .55°C/hour.

   Exception: A value of +/- .2°C/hour will be used.

   Basis: Draft 12 states the rate of change will be .2°C/hour.

ATTACHMENT D

THERMAL SCIENCE INCORPORATED ACCEPTANCE CRITERIA FOR MOISTURE CONTENT

February 23, 1993

Tennessee Valley Authority
LP-4H-C
1101 Market Street
Chattanooga, Tennessee 37402

Attention: Mr. William M. Roop, Jr.
Principal Electrical Engineer

Dear Mr. Roop:

In accord with the information presented in the operating instructions for the Delmhorst Moisture Meter, Model-DP, the manufacturer points out that even readings in the "red zone" of the dial indicate a relatively low moisture content, such as in concrete. The manufacturer further points out that a reading of 35 to 70 on the moisture meter usually indicates a range of moisture content between 2 and 4%.

We recommend that for dry acceptance purposes, the THERMO-LAG 330 Prefabricated Panels and Preshaped Conduit Sections be accepted when the Delmhorst Moisture Meter (Model-DP) has a moisture meter reading of less than 70, on the 0 to 100 scale.

We also recommend that in all areas where THERMO-LAG 330-1 Trowel Grade Material has been applied, that the same acceptance standard be used, a moisture meter reading of less than 70 on the 0 to 100 scale of the Delmhorst Moisture Meter (Model-DP).

Yours truly,

B. E. Evans
Quality Control Manager

BEE/mls

Fax No: 615-751-8247

THERMAL SCIENCE, INC. • 2200 CASSENS DR. • ST. LOUIS, MO 63026 • (314) 349-1233
Telex: 209901 (Answerback: TSI UR) • Telecopier (314) 349-1207

ATTACHMENT E

MEMORANDUM FROM CORPORATE ENGINEERING TO DOCUMENT THE CURRENT ACCURACY REQUIREMENT

B44 930302 001

QA RECORD

March 2, 1993

R.L Morley, PSB1B-C

WATTS BAR NUCLEAR PLANT
AMPACITY DERATING TESTS FOR THERMOLAG FIRE BARRIER MATERIAL
CLSD JOB NUMBER 93-0501

The purpose of this memorandum is to confirm information given to your C.L. Rutledge by K.W. Brown on March 1, 1993. During the course of the review of revision 0 of the test plan for the subject task, it was noted that accuracy requirements in Draft 12 of IEEE P-848 contain a typographical error.

Section 5.4.2 of draft 11 of the subject standard required that the current be measured to within 0.1 amps. As was noted during the March 1 review, the 0.1 amp requirement was a carry over from an earlier draft in which only 3/c No. 6 AWG cables were utilized. Subsequently, derating tests for fire protected conduits were revised to require the use of a 4-inch conduit containing 3-1/c 750 kcmil cables but the working group failed to change the accuracy requirements to a percentage of reading. Such an approach would better reflect the wide disparity between the magnitude of current which would be required for No. 6 AWG and 750 kcmil. Consequently, section 4.5.2 of draft 12 of the standard was revised.

Our K.W. Brown is a member of IEEE/ICC Working Group 12-45 which is preparing the standard. He has checked with other members who were present at the February 22-23 meetings in Boston where draft 12 was prepared and has confirmed that the 0.5 percent limit therein was an error. The requirement should have been to measure current to a 1 percent accuracy. The Working Group has already agreed to correct this section.

Therefore, section 5.3.10 of the test plan shall require that currents during the derating tests are measured with an accuracy of 1 percent.

Should you have any questions regarding the above please contact me at 751-7501.

R.E. Miller
LP4H-C

cc: RIMS, MR 2F-C
J.A. Krieg, LP4H-C
W.R. Roop, LP4H-C
K.W. Brown, LP4H-C

ATTACHMENT B

LOG BOOK

TENNESSEE VALLEY AUTHORITY

Central Laboratories Services Department

Qualification Laboratory

LOG BOOK

Job No. 93-0501

WBNP Conduit Ampacity Test

Book 1 of 1

1-22-93 CLR

Bill Koop from Corporate Engineering and the installers from Sequoyah are here to begin applying the "Thermolag" to the conduit. Installers Dan Headrick and Larry Stone.

Starett Digital Caliper
903574 Cal 10-15-92 Due 4-15-93
Using to measure thermolag thickness.

PIECE ID		THICKNESS MINIMUM	MAXIMUM	
93-0501-1.1	ACCEPT –	.561 MIN →	.748 MAX	DB-F9-90900
93-0501.1.2	REJECT –	THIN – .480 (TYPICAL MINIMUM)	.743 (TYP. MAX.)	"
93-0501.1.3	ACCEPT	.54 MIN →	.80 MAX	"
93-0501.1.4	ACCEPT –	.558 MIN →	.723 MAX	"
93.0501.1.5	ACCEPT	.54 MIN –	.74 MAX	"
93.0501.1.6	ACCEPT	.50 MIN →	.68 MAX	"
93.0501.1.7	ACCEPT	.52 MIN →	.73 MAX	MANUFACTURER'S "
93.0501.1.8	ACCEPT	.59 MIN →	.70 MAX	MARK "
93.0501.1.9	ACCEPT	.55 MIN →	.72 MAX	"
93.0501-1.10	ACCEPT	.61 MIN →	.72 MAX	F9-907058-DB
93.0501-1-11	ACCEPT	.53 MIN →	.74 MAX	F9-908065-DB
93.0501-1-12	ACCEPT	.54 MIN →	.68 MAX	F9-907058-DB
93.0501-1-13	ACCEPT	.59 MIN →	.68 MAX	F9-908065-DB
93.0501-1-14	ACCEPT	.53 MIN →	.66 MAX	F9-908065-DB
93.0501.2-1	ACCEPT	.58 MIN →	.73 MAX	F9-909009 DB
93.0501.2.2	ACCEPT	.57 MIN →	.73 MAX	F9-908065 DB
93.0501-2.3	ACCEPT	.56 MIN →	.73 MAX	F9-908065 DB
93.0501-2.4	ACCEPT	.54 MIN →	.70 MAX NOT INSTALLED	F9-908065 DB
93.0501-2.5	ACCEPT	.53 MIN →	.69 MAX	F9-909009 DB
93.0501.2.6	ACCEPT	.55 MIN →	.71 MAX	F9-908065 DB
93.0501.2.7	ACCEPT	.52 MIN →	.66 MAX	F9-909009 DB
93.0501.2.8	ACCEPT	.51 MIN →	.70 MAX	F9-909009 DB
93.0501.2.9	ACCEPT	.66 MIN →	.66 MAX	F9-907058 DB
93.0501.2.10	ACCEPT	.57 MIN →	.69 MAX	F9-909009 DB
93.0501.2.11	ACCEPT	.58 MIN →	.73 MAX	F9-909009 DB
93.0501.2.12	ACCEPT	.59 MIN →	.72 MAX	F9-909009 DB
93.0501.2.13	ACCEPT	.54 MIN →	.71 MAX	F9-909009 DB
93.0501.2.14	ACCEPT	.56 MIN →	.71 MAX	F9-909009 DB

SUBMITTED BY: Frank A. Dermey DATE: 1-22-93

REVIEWED BY: Walter E. Poly DATE: 5/6/93

1-22-93 1" specimens will be numbered 93-0501-5 through 93-0501-8

Piece ID		Thickness Minimum	Thickness Maximum		Manuf. Mark
93-0501-5.1	ACCEPT	.62	.80		F9907063 DO
93-0501-5.2	ACCEPT	.58	.82		F9908010
93-0501-5.3	ACCEPT	.58	.82		F9907063 DO
93-0501-5.4	ACCEPT	.60	.82		F9908010 DO
93-0501-5.5	ACCEPT	.59	.76		F9-907063 DO
93-0501-5.6	ACCEPT	.56	.76		F9-908010 DO
93-0501-5.7	ACCEPT	.59	.84		F9 907063 DO
93-0501-5.8	ACCEPT	.51	.75	CLL 1-22-93	F9908010 DO
93-0501-5.9	ACCEPT	.50	.85	~~NOT~~ PART USED	F9-909009 DB
93-0501-5.10	ACCEPT	.61	.89		F9-909009 DB
93-0501-5.11	ACCEPT	.57	.80		F9-909009 DB
93-0501-5.12	ACCEPT	.54	.85		F9-909009 DB
93-0501-5.13	ACCEPT	.58	.81		F9 909009 DB
93-0501-5.14	ACCEPT	.56	.83		F9 909009 DB

SUBMITTED BY: C. L. Lutledge DATE: 01-22-93

REVIEWED BY: Frank A. Dunez DATE: 2-1-93

1-25-93 1" Specimen

Piece ID	Thickness Minimum	Thickness Maximum	Manuf.	Mark
93-0501-6.1	.53	.80	F9-909009	DB
93-0501-6.2	.52	.71	F9-909009	DB
93-0501-6.3	.57	.86	F9-909009	DB
93-0501-6.4	.60	.79	F9-909009	DB
93-0501-6.5	.51	.77	F9-909009	DB
93-0501-6.6	.51	.86	F9-909009	DB
93-0501-6.7	.55	.89	F9-909009	DB
93-0501-6.8	.53	.91	F9-909009	DB
93-0501-6.9	.54	.73	F9-909009	DB
93-0501-6.10	.51	.89	F9-909009	DB
93-0501-6.11	.55	.77	F9-909009	DB
93-0501-6.12	.50	.81	F9-909009	DB
93-0501-6.13	.55	.80	F9-907063	DB
93-0501-6.14	.51	.95	F9-909009	DB

Starrett 903574

Bill Roop attempted to contact TSI with WBN purchasing to find out when the 1/4" upgrade and 1/4" thermolag would arrive.

At approximately 5:00 p.m. TSI returned the call and said the material had not left their facility and would probably be shipped tomorrow.

SUBMITTED BY: C L Littledge DATE: 1-25-93

REVIEWED BY: Frank A. Deiney DATE: 2-1-93

1-26-93 24" Rule 900971 Cal 8-11-88

Due 8-11-93

Used as a transfer standard to compare circumference measurments

Bare conduit 4"
14 3/8"

4 3/8 1"

93-0501-1 measure every foot - 4" 1/2" thermolag

19 7/16
19 9/16
19 11/16
19 5/16
19 1/2
19 3/8
18 13/16
19
19 3/16
19 5/16
20
19 9/16
19 7/16
19 11/16
19 11/16
19 11/16
19 5/16
19 1/4
19 1/2
19 3/4

SUBMITTED BY: CL Lutledge DATE: 1-26-93

REVIEWED BY: Frank A. Deeney DATE: 2-1-93

1-26-93 Specimen 93-0501-5 1" w/ ½" thermolag

9 5/8
9 5/16
9 3/8
9 7/16
9 7/16
9 ½
9 5/16
9 3/8
9 9/16
9 9/16
9 7/16
9 5/16
9 7/16
9 1/16
9 1/16
8 7/8
9 ½
9 ½
9 3/8
9 ½

SUBMITTED BY: C L Rutledge DATE: 1-26-93

REVIEWED BY: Frank A. Dewey DATE: 2-1-93

1-27-93 1" Conduit with 1/4" thermolag and 1/4" upgrade

1/4" base

93-0501-7.1	.30	.44	F93	01004 DB
93-0501-7.2	.30	.46	F93	01004 DB
93-0501-7.3	.39	.46	F93	01004 DB
93-0501-7.4	.38	.47	F93	01004 DB
93-0501-7.5	.46	.51	F93	01004 DB
93-0501-7.6	.38	.52	F93	01004 DB
93-0501-7.7	.40	.50	F93	01004 DB
93-0501-7.8	.39	.51	F93	01004 DB
93-0501-7.9	.39	.48	F93	01004 DB
93-0501-7.10	.35	48	F93	01004 DB
93-0501-7.11	.42	.53	F93	01004 DB
93-0501-7.12	.43	.54	F93	01004 DB
93-0501-7.13	.40	.48	F93	01004 DB
93-0501-7.14	.40 ~~.51~~ CLR 1-27-93	.51	F93	01004 DB

SUBMITTED BY: C L Rutledge DATE: 1-27-93

REVIEWED BY: Frank A. Dewey DATE: 2-1-93

4" Conduit 4" thermolag

1-27-93

Part ID		Min.	Max	Mfg.'s Mark
93-0501-3.1		.35	.51	F 93-01004 DB
93-0501-3.2		.38	.48	F 93-01004 DB
93-0501-3.3		.50	.54	F 93-01004 DB
93-0501-3.4		.36	.44	F 93-01004 DB
93-0501-3.5		.38	.48	F 93-01004 DB
93-0501-3.6		.35	.52	F 93-01004 DB
93-0501-3.7		.38	.44	F 93-01004 DB
93-0501-3.8		.35	.48	F 93-01004 DB
93-0501-3.9		.36	.42	F 93-01004 DB
93-0501-3.10	NOT USED	.42	.47	F 93-01004 DB
93-0501-3.11		.39	.47	F 93-01004 DB
93-0501-3.12		.46	.55	F 93-01004 DB
93-0501-3.13		.34	.50	F 93-01004 DB
93-0501-3.14		.36	.48	F 93-01004 DB

SUBMITTED BY: C L Rutledge DATE: 1-27-93

REVIEWED BY: Frank A. Dewey DATE: 2-1-93

1-28-93 # ing of conduits w/ description

93-0501-1 4" with ½" thermolag
93-0501-2 4" with ½" thermolag w/ ¼" upgrade
93-0501-3 4" with ¼" thermolag w/ ¼" upgrade
93-0501-4 4" bare
93-0501-5 1" with ½" thermolag
6 1¼" with ½" thermolag and ¼" upgrade
cle 1-28-93 cle 1-28-93
-7 1" with ¼" thermolag and ¼" upgrade
8 1" Bare

Piece ID		Min	Max	Mfgs Mark
93-0501-6.15		.37	.43	F93-01004 DB
93-0501-6.16		.34	.47	F93-01004 DB
93-0501-6.17		.37	.51	F93-01004 DB
93-0501-6.18		.40	.51	F93-01004 DB
93-0501-6.19		.34	.49	F93-01004 DB
93-0501-6.20		.40	.51	F93-01004 DB
93-0501-6.21		.35	.45	F93-01004 DB
93-0501-6.22		.38	.47	F93-01004 DB
93-0501-6.23		.38	.42	F93-01004 DB
93-0501-6.24		.40	.53	F93-01004 DB
93-0501-6.25		.39	.48	F93-01004 DB
93-0501-6.26	reject	.24	.48	F93-01004 DB
93-0501-6.27		.36	.48	F93-01004 DB
93-0501-6.28		.36	.50	F93-01004 DB
93-0501-6.29		.38	.44	F93-01004 DB

SUBMITTED BY: C L Rutledge DATE: 1-28-93

REVIEWED BY: Frank A. Deeney DATE: 2-1-93

1-29-93 ¼" upgrade over ¼" thermolag

Piece ID	Min	Max	Mfgr Mark
93-0501-7.15	.38	.41	F93 01004 DB
93-0501-7.16	.32	.36	F93 01004 DB
93-0501-7.17	.34	.40	F93 01004 DB
93-0501-7.18	.30	.43	F93 01004 DB
93-0501-7.19	.29	.35	F93 01004 DB
93-0501-7.20	.31	.43	F93 01004 DB
93-0501-7.21	.25	.37	F93 01004 DB
93-0501-7.22	.35	.37	F93 01004 DB
93-0501-7.23	.31	.42	F93 01004 DB
93-0501-7.24	.28	.33	F93 01004 DB
93-0501-7.25	.25	.34	F93 01004 DB
93-0501-7.26	.28	.41	F93 01004 DB
93-0501-7.27	.30	.43	F93 01004 DB
93-0501-7.28	.32	.41	F93 01004 DB

4"

93-0501-3.15	.31	.39	F93 01004 DB
93-0501-3.16	.34	.45	F93 01004 DB
93-0501-3.17	.29	.42	F93 01004 DB
93-0501-3.18	.29	.36	F93 01004 DB
93-0501-3.19	.26	.39	F93 01004 DB
93-0501-3.20 NOT USED	.32	.40	F93 01004 DB
93-0501-3.21	.27	.38	F93 01004 DB
93-0501-3.22	.27	.42	F93 01004 DB
93-0501-3.23	.25	.39	F93 01004 DB
93-0501-3.24	.29	.41	F93 01004 DB
93-0501-3.25	.37	.41	F93 01004 DB
93-0501-3.26	.26	.37	F93 01004 DB
93-0501-3.27	.26	.36	F93 01004 DB
93-0501-3.28	.25	.42	F93 01004 DB

SUBMITTED BY: C L Lattedge DATE: 1-29-93

REVIEWED BY: Frank A. Quiney DATE: 2-1-93

1-29-93

Piece ID		Min	Max	Mfg. ID
93-0501-2.15	NOT USED	.26	.41	F93-01004 DB
93-0501-2.16		.27	.36	F93-01004 DB
93-0501-2.17		.33	.42	F93-01004 DB
93-0501-2.18		.30	.43	F93-01004 DB
93-0501-2.19		.25	.39	F93-01004 DB
93-0501-2.20		.29	.39	F93-01004 DB
93-0501-2.21		.30	.44	F93-01004 DB
93-0501-2.22		.35	.42	F93-01004 DB
93-0501-2.23		.30	.44	F93-01004 DB
93-0501-2.24		.30	.44	F93-01004 DB
93-0501-2.25		.25	.45	F93-01004 DB
93-0501-2.26		.34	.45	F93-01004 DB
93-0501-2.27		.25	.44	F93-01004 DB
93-0501-2.28		.25	.39	F93-01004 DB

Specimens 93-501-1 and 93-501-5 complete 1-27-93
½" thermolag

SUBMITTED BY: C L Rutledge DATE: 1-29-93

REVIEWED BY: Frank A. Dumey DATE: 2-1-93

1-30-93 Circumference Measurements

93-0501-6 1" Conduit with 1/2" thermolag and 1/4" upgrade

12 9/16	12.563
12 7/8	12.875
13 1/4	12.250
12 13/16	12.813
12 3/8	12.375
12 1/2	12.500
12 1/2	12.500
12 13/16	12.813
12 7/8	12.875
12 3/8	12.375
12 13/16	12.813
12 11/16	12.688
12 11/16	12.688
12 7/8	12.875
12 13/16	12.813
12 1/2	12.500
12 5/8	12.625
12 5/8	12.625
12 9/16	12.563
13	13.000

SUBMITTED BY: C L Rutledge DATE: 1-30-93

REVIEWED BY: Frank A. Dinney DATE: 2-1-93

2-2-93 1" conduit 1/4" base with 1/4" upgrade

inches	inches
11 1/8	11.125
11 3/16	11.188
11 1/8	11.125
11 1/2	11.500
11 3/8	11.375
11 3/8	11.375
11 3/8	11.375
11 3/8	11.375
11 3/16	11.188
11 1/4	11.250
11 5/16	11.313
11 9/16	11.563
11 9/16	11.563
11 1/2	11.500
11 3/8	11.375
11 7/16	11.438
11 3/8	11.375
11 3/8	11.375
11 5/16	11.313
11 1/4	11.250

SUBMITTED BY: CL Lutledge DATE: 2-2-93

REVIEWED BY: Frank A. Dumey DATE: 3-9-93

2-2-93 93-0591-3 4" conduit with 1/4" thermolag 1/4" upgrade

20 3/4
21
20 7/8
21 3/16
21 1/2
21 5/8
21 1/2
21 5/8
21 11/16
21 3/4
22
21 3/8
21 1/4
21 3/8
21 1/2
21 1/4
21 1/4
21 1/2
21 1/4
21

SUBMITTED BY: C. L. Lutledge DATE: 2-2-93

REVIEWED BY: Frank A. Dewey DATE: 3-9-93

2-2-93 92-0501-2 4" B-15 Conduit 1/2" base w/ 1/4" upgrade

22 1/4"
22 5/8"
22 9/16"
22 5/8"
22 1/2"
22 1/2"
22 5/8"
22 1/2"
22 3/8"
22 1/8"
22 9/16"
22 5/8"
22 5/8"
22 5/16"
22 9/16"
22 1/2"
22 3/4"
22 13/16"
22 3/8"
22 3/8"

SUBMITTED BY: C L Rutledge DATE: 2-2-93

REVIEWED BY: Frank A. Dumey DATE: 3-9-93

3-1-93 Weighed the conduits today
CLR

Used Load Cell
506324
Indicator 890398
Cal 3-12-92
Due 3-12-93

	Reading		Tare wt			
93-501-1	365.2	-	36.6	=	328.6	lbs
93501-2	466.8	-	36.6	=	430.2	lbs
93-501-3	435.4	-	36.6	=	398.8	lbs
93-501-4	232.7	-	36.6	=	196.1	lbs
93-501-5	80.4	-	.6	=	79.8	lbs
93-501-6	143.8	-	.6	=	143.2	lbs
93-501-7	122.5	-	.6	=	121.9	lbs
93-501-8	31.2	-	~~.6~~ CLR 3-1-93	=	31.2	lbs

no tare weight because we weighed only the conduit the sling was not used

		Top	Bottom
3-2-93	93-0501-1	0	0
	93-0501-2	0	0
	93-0501-3	2 units	2 units
	93-0501-4	0	0
	93-0501-5	0	0
	93-0501-6	0	0
	93-0501-7	0	0
	93-0501-8	0	0

using Delmhorst uncertified meter

SUBMITTED BY: C L Rutledge DATE: 3-2-93

REVIEWED BY: Frank A. Dewey DATE: 3-9-93

3-5-93 CLR

		Top	Bottom
3-5-93	93-0501-7	0	0
	93-0501-6	0	0
	93-0501-5	0	0
	93-0501-1	0	0
	93-0501-3	0	1
	93-501-2	0	0

Moisture Readings

3-9-93 We began on 3-4-93 to check out the cable, room and conduit to find out if the were any problems.

The bare 1" conduit with the cable assembly was used for this purpose.

The room was heated to approximately 40°C and the cable was energized. The temperature of the conductor was monitored and appeared to be operating satisfactorily.

As the cable approached the equilibrium temperature of 90°C we noted that the temperatures at the three locations diverged. They were so far apart that the ± 4°C criteria could not be met.

Several variables were changed, one at a time, to determine the root cause of the temperature problem.

Items that were checked were:

1) Uniformity of the room.

This was accomplished by putting

SUBMITTED BY: C L Rutledge DATE: 3-9-93

REVIEWED BY: Frank A. Dorney DATE: 3-9-93

several more thermocouples around the room and then the conduit and cable were turned around inside the room. The end of the conduit that had been colder remained colder and this along with the additional T/C allowed us to rule out the cause being the room temperature.

2) The thermocouples readings were questioned, however, the T/C were checked before the checkout began and we had 1 spare T/C we changed out one of the original T/C and obtained the same reading. Additionally all three thermocouples at each location were consistent with the other thermocouples at that location. We ruled out the thermocouples being the problem.

3) The conduit itself was questioned. We placed thermocouples on the outside of the conduit and the temperatures appeared to be 10°C different. We had earlier considered the possibility of eddy currents but did not think they would have a large affect on our readings. It appeared at this time that the eddy currents were causing the temperature to skew and that the two sections of conduit CLR 3-9-93 ~~were~~ had CLR 3-9-93 slightly different properties. ~~The cond~~ To confirm this we removed the cable from the conduit and turned the conduit around and reinstalled the cable. We reenergized the cable and the temperatures of the hot and cold ends flipped around verifying that the conduit did affect the temperature. We then took 1 10' section and cut it in ½ and put 5' on each end. We installed the cable and the temperatures were all within 1°C of each other.

SUBMITTED BY: C L Lutledge DATE: 3-9-93

REVIEWED BY: Frank A. Dilmey DATE: 3-9-93

3-9-93 CLR

We then discussed the possibility that the sections of conduit that were coated with thermolag may exhibit this phenomenon. We believe the thermolag will dampen this affect, however, this cannot be confirmed until we begin testing the coated sections of conduit.

Reading on 93-0501-6 Moisture

Top 0
Bottom 0

SUBMITTED BY: ~~Frank A. Dewney~~ CLR 3-9-93 C L Butler DATE: ~~3-9-93~~ 3-9-93 CLR 3-9-93

REVIEWED BY: Frank A. Dewney DATE: 3-10-93

3-10-93 The center thermocouple for specimen 93-0501-6 is at approximately 10' from each end of the conduit.

Item number 06 ran overnight and we had about 5 hours of data that we were within tolerance. The program did not check to verify that the three locations were within ±4°C and did not check the room temperatures to ensure each individual one was within ±2°C. This will be rechecked for the final report.

10:45 am Changed out the conduits/cables and beginning to run the baseline 93-0501-08.

Checked moisture content about 30 minutes after the end of the test for 93-0501-6
Top 0
Bottom 0 } Delmhorst meter.

3:45 pm Checked the moisture content for Specimen 93-0501-5 Top 0 Bottom 0 Using Delmhorst Meter

Going to let -05 run overnight

SUBMITTED BY: C L Stilledge DATE: 3-10-93

REVIEWED BY: Frank A. Demmy DATE: 3-10-93

3-11-93 Verified the current.

Read 5.284 mV w/ .00009967 shunt

53.01 A – 53.00 A on the computer.

This is just to verify that the current has not drifted since the calibration was performed.

7:25am Specimen 93-0501-05 ran over night and the current was a little low. It only got to about 86°C. We turned the current up and are waiting for the conductor to get to 90°C

12:45 pm Completed 3 hour run on Specimen ~~8~~ 93-0501-05. Checked moisture content top 0
bottom 0

CLR 3-11-93

Installed 93-0501-7. Checked moisture content top 0
bottom 0.

SUBMITTED BY: C L Rutledge DATE: 3-11-93

REVIEWED BY: Frank A. Duney DATE: 3-12-93

3-12-93 Specimen 93-0501-07 ran over night and there were more than three hours worth of steady state operation.

The thermocouples were centered in the conduit for all of the testing on the 1" conduit.

We started to check the reading for the current measurement and the Fluke 8506 reading seemed to be reading about 0.5 to 1 A higher than the data logger. We then checked the voltage drop across the shunt using a Keithly 197 890279 CLL 3-12-93 and the current (calculated) was within .1 A of the data logger reading. We checked the voltage drop across the shunt with a Keithly 2001 (not certified) and it indicated that the data logger current was correct. We then went and got another Fluke 8506 (TA572564) and the indication ~~and~~ CLL 3-12-93 was that the data logger reading was low. (i.e. the two 8506 Fluke agreed with each other.

SUBMITTED BY: C L Lutledge DATE: 3-12-93

REVIEWED BY: Frank A. Deeney DATE: 3-18-93

3-12-93 We then took the Fluke 8506 (890647) to the lab and had the mV reading checked at 500 mV and the Keithly 2001 (not certified) and the two meters read 5.001 mV Keithly 2001
5.01 mV Fluke 8506 (890647)

This indicated that the Fluke 8506 may have some interference or distortion that it was picking up that the other meters were not picking up. CLR 3-12-93

We then reconnected the Fluke 8506 to the shunt and plugged it in to another outlet.

All of the meters appear to indicate the same current.

Fluke data logger			52.44 A	*
Fluke	8506A	(572564)	52.6	
Fluke	8506	(890647)	52.3	*
Keithly	2001		52.4 A	

* These are the instruments that have been used throughout the testing to verify the current.

The other instruments used are not part of the certified instrumentation they were used for troubleshooting only and will not be listed in the instrument log.

SUBMITTED BY: C L Lutledge DATE: 3-12-93

REVIEWED BY: Frank A. Dewey DATE: 3-18-93

3-12-93 We plugged the Fluke 8506 back into the original plug and it read CLR high again.

The shunt used for all of the checking.
Shunt 903849 .00009967 ohm

The Fluke 8506 A when plugged in to the power supply (which is an isolated power supply) reads ~~the~~ CLR 3-12-93 approximately the same as the other instruments (within specs.)

Specimen 93-0501-7 Moisture
Top 0
Bottom 0

SUBMITTED BY: C L Lutledge DATE: 3-12-93

REVIEWED BY: Frank A. Dewey DATE: 3-18-93

3-17-93 Had a major snow storm that delayed
CLR testing for 3 days.

Yesterday we installed the 4" bare conduit and started to check out our test setup. It takes 6-8 hours to get the cable to temperature.

Finished run on this cable at about 4:00 pm. Specimen 93-0501-4.

SUBMITTED BY: C L Rutledge DATE: 3-17-93

REVIEWED BY: Frank A. Dewey DATE: 3-18-93

3-18-93 Starting 93-0501-2 4" Conduit ½" Thermolag
CLR with ¼" upgrade. Moisture Top 0
Bottom 0

3-19-93 Completed 93-0501-2. It ran from
CLR 500 pm on the 18 to 7:30 am without
ever going out of specifications.
Checked moisture top 0
bottom 0

Started 93-0501-3 Checked moisture
93-0501-3 top 0
bottom 0

Julio Lara with NRC checked to see how
the test was going and I gave him
preliminary results

3-20-93 Ran specimen 93-0501-3 overnight but the
CLR current was set too high and the
cable ran at about 92.5°C (Current ~~238~~ 222 A). CLR 3-20-93
Turned the current to about 219A and we
are attempting to stabilize.

Completed 93-0501-3 @ about 2:30 pm.

SUBMITTED BY: C L Littledy DATE: 3-20-93

REVIEWED BY: Frank A. Sevely DATE: 3-20-93

3-20-93 Removed 93-0501-3 Checked Moisture
CLR

Top 0
Bottom 0

Moisture Content 930501-1

Top 0
Bottom 0

Verified the current calibration

Shunt & 8506	213.2 A	903849
Data Logger	214.1 A	890647

Ons 3-21-93 CLR 3-22-93

3-22-93 The specimen 93-0501-3 was not stabilized
CLR at 90°C ± 1.1°C. We turned the current up and allowed it to stabilize and run over night. The current was higher than we expected ~ 245 A. We expected something around 230 A based on the results from the bare conduit.

The moisture content was measured

Top 0
Bottom 0

I informed Bill that the current was higher and if they want more testing we will revise the test plan.

SUBMITTED BY: C L Littlejohn DATE: 3-22-93

REVIEWED BY: Frank A. Dunney DATE: 3-30-93

~~3-23~~ CLR 3-22-93
3-22-93

Electrical measurements of 6 AWG Cable.

4 conductor cable in air CLR 3-22-93 @ 100 Amps Volts of CB9110 output terminals = 4.58 V Phase angle = 8°-10°

in 1" conduit

4C @ 100 Amps

Volts of CB9110 @ output terminals = 4.58 V

Phase Angle 8°-10°

3C 6 AWG in Air

100 ~~Amps~~ CLR 3-22-93 Amps

2.99 Volts

20° Phase Shift

3C 6AWG in 1" Conduit 20 ft long

100 Amps

6.39 Volts

24° Phase Shift

3C 6 AWG in 1" Conduit 10 ft long Section #1
100 Amps
4.804 V
20° Phase Shift
(from the conduit in the middle)

SUBMITTED BY: C L Pittledge DATE: 3-22-93

REVIEWED BY: Frank A. Dewey DATE: 3-30-93

3-22-93

(cold)

6AWG 3C in 1" 10 ft section #2

100 Amps
4.713 V
20° ~~24°~~ Phase Shift
CLR
3-22-93

~~(hot)~~ CLR 3-22-93

6 AWG 3 C in 1" 10 ft section #3

100 amps
4.681 V
20° Phase Shift

93-0501-7

6 AWG 3C in 1" 20ft conduit

100 amps

6.463 V
24° ~~20°~~ Phase Shift
CLR 3-22-93

93-0501-6

100 amps
21° Phase Shift
6.432 V

93-0501-5
100 amps
6.418 V
20° Phase Shift

(hot)

10 ft section #4

100 amps
20° Phase Shift
4.728 V

SUBMITTED BY: C L Rutledge DATE: 3-22-93

REVIEWED BY: Frank A. Devney DATE: 3-30-93

3-29-93 4 Cond 6 AWG

WH - WHITE
GR - GREEN
BL - BLACK
RD - RED

CLR	Channel	T/C #	Location
0	0		1 RD
1	1		1 WH
2	2		CLR 1 ~~2~~ BL
4	4		3-28-93 1 4 ~~RD~~ GR CLR 3-28-93
5	5		2 ~~RD~~ RD
6	6		2 WH
7	7		2 BL
8	8		2 GR
9	9		3 RD
10	10		3 WH
11	11		3 BL
12	12		3 GR

750 MCM 4 Conductor

Channel	T/C #	Location
20	14	1 RD
21	15	1 WH
22	16	1 GR
23	17	1 BL
24	18	2 RD
25	19	2 WH
26	20	2 GR
27	21	2 BL
28	22	3 RD
29	23	3 WH
30	24	3 GR
31	25	3 BL

SUBMITTED BY: C L Rutledge DATE: 3-28-93

REVIEWED BY: Frank A. Dewey DATE: 3-30-93

3-29-93 Finished 93-0501-8 4 conductor

CLR Measured moisture for 93 CLR 3-29-93 93-0501-5

Top 0 Bottom 0

CLR 3-29-93

84° Phase Shift

3.31 V at 59.2 Amps

93 CLR 3-29-93

For Specimen 93-0501-8

8° Phase Shift 3.14 V @ 62 Amps

93-0501-7 Moisture Top 0 Bottom 0

93-0501-5 Post Test Moisture Top 0 Bottom 0

3-30-93 Checked current calibration for Channel 13

CLR Shunt & 8506 59.99

Computer 59.80

Post Test Moisture 93-0501-7 Top 0 Bottom 0

Pre Test Moisture 93-0501-6 - Top 0 Bottom 0.

We installed the cable in specimen 93-0501-6 and when we attempted to start the program Thermocouple 67 was open. CLR 3-30-93 We notified Kent Brown and said we could replace with a spare T/C 13 and continue testing.

SUBMITTED BY: CL Rutledge DATE: 3-30-93

REVIEWED BY: Frank A. Delaney DATE: 3-30-93

4-1-93 Post test moisture top 0 bottom 0
taken 3-31-93

Refabricated the 4 Conductor 750 mcm cable. The thermocouples are at the same position as the first set of 4 Conductors reference entry on 3-26-93.

4-2-93 FAD SPECIMEN Ø4 - 4 CONDUCTOR - 750KCMIL - IN BARE CONDUIT RAN FROM 21:21 4-1-93 WITH TEMPERATURES AND SLOPE WITHIN SPECIFICATIONS. THE TEMPERATURE SPREAD AT EACH LOCATION WAS WIDER THAN FOR PREVIOUS TESTS - TYPICALLY 6.2°C AT LOCATION 1, 6.3°C AT LOCATION 2, AND 4.9°C AT LOCATION 3. THE SPREAD OF THE AVERAGES WAS ONLY 1.9°C. NORMALIZED CURRENT IS ABOUT 423 AMPERES. CONDUIT SURFACE TEMPERATURE IS 59°C AND 62°C. THE VOLTAGE OUTPUT FROM THE CB-9110 IS 3.02 VAC AT 421 AMPERES. THE PHASE ANGLE IS 50 DEGREES. SPECIMEN Ø4 REMOVED FROM CHAMBER 08:46

4-2-93 FAD PRE TEST MOISTURE ITEM Ø2 TOP 0, BOTTOM 0
INSTALLED ITEM Ø2 IN TEST CHAMBER
INSTALLED 4C-750KCMIL IN CONDUIT
ENERGIZED AT 600 AMPERES 09:00
CB-9110 VOLTS - 4.213 VAC PHASE ANGLE - 60 DEGREES

4-3-93 FAD ITEM Ø2 RAN OVERNIGHT (ABOUT 12 HOURS) WITHIN SPECS
CURRENT APPROXIMATELY 431 AMPERES - HOT SPOT 89.6°C
ROOM AMBIENT 40.2°C. VAC - 3.06, PHASE ANGLE 56 DEGREES
REMOVED CABLE AND SPECIMEN 08:45
MOISTURE CONTENT TOP Ø, BOTTOM Ø

4-3-93 FAD INSTALLED SPECIMEN Ø1 MOISTURE TOP Ø, BOTTOM Ø
ENERGIZED CABLE AT 09:15 - PHASE ANGLE - 56 DEGREES
452 AMPERES, 3.06 VAC.

SUBMITTED BY: CL Rutledge / Frank A. Deeney DATE: 4-5-93

REVIEWED BY: Walter E. Foley DATE: 5/6/93

4-3-93 FAD REVIEW OF PRINTOUT OF ITEM #~~02~~ #01 for 4-3-93 DATA REVEALED THAT DATE PRINTOUT DID NOT CHANGE AT MIDNIGHT SHOULD BE 04-03-93 NOT 04-02-93

4-4-93 FAD CHECKED CONDITIONS OF TEST OF ITEM #~~02~~ #01 for 4-3-93. CURRENT TO MAINTAIN EQUILIBRIUM IS ABOUT 452 AMPERES COMPARE TO 423 AMPERES ITEM 04 - BARE CONDUIT 432 AMPERES ITEM 02

CB-9110 OUTPUT @ 452 AMPERES IS 3.15 VAC PHASE ANGLE IS ABOUT 54 DEGREES.

4-5-93 CLR Post test moisture top 0 bottom 0 Specimen 01.

Pretest moisture top 0 bottom 0 Specimen 03

4-6-93 CLR Post test moisture 03 top 0 bottom 0

Testing a different section of bare conduit 2-10 foot sections to compare to the first baseline

4-27-93 CLR Engineering sent a revised copy of the Scope of Work and they want the 4" conduit tested with 24 C-6 AWG connected in series. Revising the test plan and fabricating a new cable specimen.

SUBMITTED BY: CL Rutledge / Frank A. Dewey DATE: 4-27-93

REVIEWED BY: Frank A. Dewey N.E.J. 5/6/93 Walter E. Gray DATE: ~~5-5-93~~ 5/6/93 N.E.J. 5/6/93

4-27-93
~~HTT~~ CLR
4-27-93

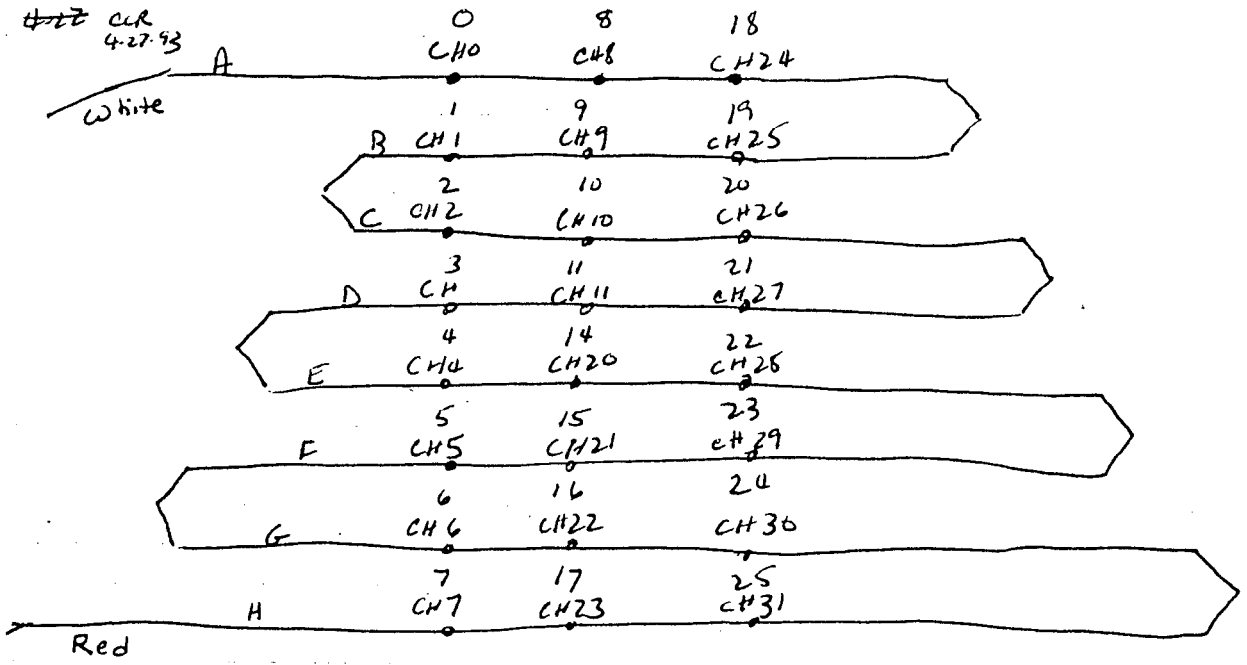

Thermocouples on the black conductor

4-29-93 Completed bare conduit test with 24 conductors

Setup 93-0501-3 Moisture 0 Top 0 Bottom

5-1-93 Completed 93-0501-3

across shunt
34.05 mV 10.485 V 8° out of phase

Moisture Top 0 Bottom 0

Temp of thermolag CLR 5-1-93 ~~3-46~~ °C 47

Checked top and bottom temperature of Thermolag both 47°C

5-3-93 Specimen 93-0501-1
Moisture Top 0
CLR Bottom 0

SUBMITTED BY: C L Lutledge DATE: 05-03-93

REVIEWED BY: Frank A. Dennis DATE: 5-5-93

5-4-93 93-0501-1 Top Moisture 0
Bottom 0
CLR

93-0501-2 Moisture Top 0
Bottom 0

5-5-93 93-501-2 Moisture Top 0
Bottom 0

5-25-93
CLR The current calibration for Channel 73 performed on 4-29-93 was checked today when Channels 71 and 72 were calibrated. It was within tolerance of ± 1% of reading.

STD mV	AMP	UUT mV	Ratio	UUT Amps	Error
20.184	20.088	.5002	200:5	20.008	-.40
30.328	30.183	.7573	200:5	30.292	.36
40.425	40.232	1.0125	200:5	40.500	.67
50.311	50.071	1.2623	200:5	50.492	.84

This is provided as additional information and does not invalidate the test performed on 4-29-93.

We are in the process of getting Revision 4 of the test plan approved.

6-2-93 CLR. Revision 4 of the test plan was approved yesterday. We started the bare conduit (2-10' sections coupled) together. This is specimen 93-0501-9. We completed a

SUBMITTED BY: C. L. Rutledge DATE: ~~6-1-93~~ 6-2-93 CLR 6-2-93

REVIEWED BY: Frank A. Dewney DATE: 6-8-93

6-2-93 CLR run late yesterday afternoon. We maintained the temperature overnight to try to obtain a value for emissivity using ~~and~~ CLR 6-2-93 Infra Red temperature gun. They are in the process of certifying the gun now. This is not required by the test plan but was additional information requested by Kent Brown.

The conduit temperatures are 59°C & 60°C for specimen 93-0501-9 3 phase.

6-3-93 CLR Specimen 9 phase angles

Black

7 degree 33 Amp 4.339 V

White

10.4 degrees 33 Amps 3.907 V

Red

8.4 degrees 33 Amps 3.606 Volts

Instruments used 320436 548497

Kent Brown requested to have a measure of emmissivity. We decided to use an IR temperature gun. The plan was to measure the surface temperature with a thermocouple and then adjust the emmissivity

SUBMITTED BY: C L Rutledge DATE: 6-3-93

REVIEWED BY: Frank A. Denney DATE: 6-8-93

6-3-93 CLR So the gun indicates the same temperature and then read the emmissivity.

Specimen 93-0501-9 was .45 for emmissivity The instrument used was 516805. This is performed for information only.

6-4-93 CLR The surface temperature are 58°C & 56°C The 56°C was measure on the center & the 5 foot section on the same end of the conduit.

Specimen 93-0501-4 information in this section. The emissivity was .45. I tried setting the emissivity at .5 and the gun indicated 5°F low. TVA 516805

The following readings were obtained

Black Wire
10 degrees 32.21 A 3.465 Volts
White Wire
6.9 degrees 32.17 A 4.169 Volts
Red Wire
11.9 degrees 32.42 A 3.849 Volts
TVA 326436, 548497

Specimen 93-0501-1 will be next

Moisture Top 0 Bottom 0

SUBMITTED BY: C L Rutledge DATE: 6-8-93

REVIEWED BY: Frank A. Demey DATE: 6-8-93

Specimen 93-0501-1

6-5-93 Moisture content Top 0 Bottom 0

CLR Black Wire

8.4 degrees 33.60 Amps 3.733 Volts

White Wire

6.2 degrees 33.68 Amps 4.314 Volts

Red Wire

10.1 degrees 33.60 Amps 4.032 Volts

320436, 548497

Conduit/Thermolag temperatures were 46°C and 49°C

The emmissivity measured using the IR gun was .45. TVA 516805.

6-7-93 Specimen 93-0501-2

CLR

Moisture Top 0 Bottom 0

6-8-93 Specimen 93-0501-2

Moisture Top 0 Bottom 0

Black Wire

7.8 degrees 33.36 Amps 3.74 Volts

White Wire

5.7 degrees 33.43 Amps 4.29 Volts

Red Wire

9.6 degrees 33.34 Amps 4.01 Volts

TVA 320436, 548497

Outside of Thermolag 45°C

Emissivity .8 TVA 516805

SUBMITTED BY: C L Rutledge DATE: 6-8-93

REVIEWED BY: Frank A. Dunley DATE: 6-8-93

6-8-93 CLR Specimen 93-0501-3 Moisture 0 - Top 0 - Bottom

6-9-93 CLR Specimen 93-0501-3 Moisture 0 - Top - 0 Bottom

Black Wire
8.4 degrees 31.78 Amps 3.50 VAC
White Wire
5.9 degrees 31.60 Amps 4.05 VAC
Red Wire
10.1 degrees 31.74 Amps 3.79 VAC

Conduit temperature / Thermolag 45 °C

Emmissivity was 1.

TVA 320436, 548497 for phase shift amps etc
TVA 516 805 for emmissivity

Starting to set up for the 3 phase 1". Test plan will be revised.

The configuration is

	TC6 CH6	TC15 CH21	TC24 CH30
white			
	TC7 ~~TC15~~ CH7 ~~CH21~~ CLR 6-9-93	TC17 CH23 CLR 6-9-93	TC25 CH31
black			
	TC5 ~~TC24~~ CH5 ~~CH30~~ CLR 6-9-93	TC16 CH22 CLR 6-9-93	TC23 CH29
red			

6-16-93 CLR Testing of the 1" Conduit 3 phase testing began today.

Red Wire
7.2 degrees 63.87 Amps 2.21 Vac
White Wire
7.9 degrees 64.04 Amps 2.12 Vac
Black Wire
7.8 degrees 64.10 Amps 2.19 Vac

SUBMITTED BY: CL Rutledge DATE: 6-16-93

REVIEWED BY: Frank A. Denney DATE: 6-24-93

6-16-93 CLR

Instruments used for measuring phase angle etc.
TVA 320436, 548497
Emmissivity 0.7 TVA 516805

6-17-93 CLR

Issued an anomaly to document the check for the current measurement at 70 Amps (Anomaly 93-0023)
Testing Specimen 93-0501-10 (2-10' sections of 1" conduit coupled together.)

Black Wire 8.4 degrees	2.130 VAC	62.66 IAC
White Wire 7.9 degrees	2.037 VAC	62.76 IAC
Red Wire 7.7 degrees	2.189 VAC	62.59 IAC

TVA 320436, 548497
Emissivity .75 TVA 516805

6-18-93 CLR

Item 06 Begin
Moisture Top 0 Bottom 0

6-19-93 CLR

Black Wire 8.7 degrees	2.147 VAC	63.30 Amps
White Wire 8.2 degrees	2.073 VAC	63.78 Amps
Red Wire 7.4 degrees	2.203 VAC	63.58 Amps

TVA 320436, 548497
Emissivity .80 TVA 516805
Conduit temperature 45°C.
Moisture Top 0 Bottom 0

SUBMITTED BY: C L Rutledge DATE: 6-19-93

REVIEWED BY: Frank A. Dewney DATE: 6-24-93

6-19-93 CLR 93-0501-05 3 phase test

Moisture Top 0 Bottom 0.

We the program was started The thermocouple 5 (Red Wire Location 1) was indicating open. Replaced it with Thermocouple 2. Wrote anomaly and notified QA department so they can issue an NCR on Monday.

6-21-93 CLR 93-0501-05 3 phase test Post Test

Moisture Top Bottom 0

Black Wire
8.3 degrees 2.185 VAC 64.53 I AC
White Wire
8.2 degrees 2.097 VAC 64.31 IAC
Red Wire
7.7 degrees 2.256 VAC 64.46 IAC
TVA 320436, 548497
Surface Temp 46.25°C

Emissivity .8
TVA 516805

Item 93-0501-07 3 phase test

Moisture Top 0 Bottom 0.

6-22-93 CLR Black Wire
8.0 degrees 2.173 VAC 62.88 IAC
White Wire
8.1 degrees 2.054 VAC 62.90 IAC
Red Wire
7.7 degrees 2.229 VAC 63.23 IAC
TVA 320436, 548497
Surface Temp 46.3°C Emissivity .8
TVA 516805

SUBMITTED BY: C L Rutledge DATE: 6-22-93

REVIEWED BY: Frank A. Demery DATE: 6-24-93

6-22-93 Moisture Top 0 Bottom 0
CLR

All testing were performed with the center thermocouple approximately 10 feet from each end.

This is the last page of the log book

SUBMITTED BY: CL Rutledge DATE: 6-22-93

REVIEWED BY: Frank A. Dewey DATE: 6-24-93

ATTACHMENT C

SUMMARY OF NORMALIZED CURRENTS

SUMMARY OF AVERAGE CURRENTS AND AMPACITY CORRECTION FACTORS
FOR TESTING PERFORMED ON 4" CONDUITS

DESCRIPTION	BARE	BARE	5/8" THERMOLAG	5/8" BASE WITH 3/8" UPGRADE	3/8" BASE WITH 3/8" UPGRADE
SPECIMEN IDENTIFICATION	93-0501-4	93-0501-9	93-0501-1	93-0505-2	93-0501-3
3 CONDUCTOR	234.1	*	246.3	228.2	215.0
ACF-1			1.052	0.975	0.918
4 CONDUCTOR	420.3	434.5	450.8	433.5	424.5
ACF-1			1.073	1.031	1.010
ACF-2			1.038	0.998	0.977
24 CONDUCTOR	32.1	33.2	34.3	33.4	33.1
ACF-1			1.069	1.041	1.031
ACF-2			1.033	1.006	0.997
3 PHASE	32.4	33.4	34.0	33.7	31.7
ACF-1			1.049	1.040	0.978
ACF-2			1.018	1.009	0.949

* TEST NOT PERFORMED
ACF-1 IS THE CORRECTION FACTOR USING THE CURRENT MEASURED IN THE BARE CONDUIT CONSTRUCTED OF ONE 10 FOOT SECTION WITH A 5 FOOT SECTION ON EACH END.
ACF-2 IS THE CORRECTION FACTOR USING THE CURRENT MEASURED IN THE BARE CONDUIT CONSTRUCTED OF TWO 10 FOOT SECTIONS.

SUMMARY OF AVERAGE CURRENTS AND AMPACITY CORRECTION FACTORS
FOR TESTING PERFORMED ON 1" CONDUITS

DESCRIPTION	BARE	BARE	5/8" THERMOLAG	5/8" BASE WITH 3/8" UPGRADE	1/4" BASE WITH 1/4" UPGRADE
SPECIMEN IDENTIFICATION	93-0501-8	93-0501-10	93-0501-5	93-0505-6	93-0501-7
3 CONDUCTOR ACF-1	54.3	*	52.4 0.965	51.9 0.956	52.6 0.969
4 CONDUCTOR ACF-1	60.8	*	59.7 0.982	58.8 0.967	60.2 0.990
3 PHASE ACF-1 ACF-2	64.2	62.6	64.3 1.002 1.027	62.7 0.977 1.002	63.6 0.991 1.016

* TEST NOT PERFORMED
ACF-1 IS THE CORRECTION FACTOR USING THE CURRENT MEASURED IN THE BARE CONDUIT CONSTRUCTED OF ONE 10 FOOT SECTION WITH A 5 FOOT SECTION ON EACH END.
ACF-2 IS THE CORRECTION FACTOR USING THE CURRENT MEASURED IN THE BARE CONDUIT CONSTRUCTED OF TWO 10 FOOT SECTIONS.

ATTACHMENT D

SUMMARY OF THERMO-LAG INSTALLATION, SPECIMEN WEIGHT AND CIRCUMFERENCE

ITEMS TESTED	THERMO-LAG			WEIGHT (LBS)			THERMO-LAG DIMENSIONS			
	CONDUIT	BASE	UPGRADE	CONDUIT (LBS)	THERMOLAG (LBS)	TOTAL (LBS)	ID (INCHES)	OD (INCHES)	S* (SQ IN)	V** (CUBIC IN)
93-0501-1	4 INCH	1/2		196.1	132.5	328.6	4.5	6.2	4675	3429
93-0501-2	4 INCH	1/2	1/4	196.1	234.1	430.2	4.5	7.2	6122	5955
93-0501-3	4 INCH	1/4	1/4	196.1	202.7	398.8	4.5	6.8	5126	4899
93-0501-4	4 INCH	BARE		196.1		196.1 ***	4.0	4.5	3393	801
93-0501-5	1 INCH	1/2		31.2	48.6	79.8	1.3	3.0	2263	1378
93-0501-6	1 INCH	1/2	1/4	31.2	112.0	143.2	1.3	4.0	3038	2697
93-0501-7	1 INCH	1/4	1/4	31.2	90.7	121.9	1.3	3.6	2724	2124
93-0501-8	1 INCH	BARE		31.2		31.2 ***	1.0	1.3	980	980

*SURFACE AREA
**VOLUME
***CONDUIT DIMENSIONS

NOTES:
1. CONDUIT WEIGHT OF AN ITEM IS BASED ON THE WEIGHT OF THE BARE CONDUIT.
2. THERMOLAG DIMENSIONS ARE BASED ON MEASUREMENTS OF THE FINISHED ITEM AND THE OUTSIDE DIAMETER OF THE CONDUIT.
3. DIMENSIONS ARE IN INCHES, SQUARE INCHES AND CUBIC INCHES.

T25 93 0120836

QA Record

January 20, 1993

R. E. Miller, LP 4N 127-C

WATTS BAR NUCLEAR PLANT (WBN) - THERMO-LAG TESTING PROGRAM

Attached are the Thermo-Lag Installation Procedure and sketches to be used for the installation of the Thermo-Lag on the conduits for the Ampacity Derating Testing. The attachment includes the installation procedure, sketch, and allowable tolerances. These procedures, sketches, and tolerances were discussed with W. M. Roop, Jr. of your staff.

If you have any questions, please contact J. J. Pierce at 365-1468.

R. M. Johnson

R. M. Johnson
Unit 1 Project Engineer
IOB 1C-WBN

JJP:JMB
Attachment
cc: M. C. Brickey, IOB 1G-WBN
Tom Davis, MOB 2M-WBN
RIMS, QAC 1G-WBN

INSTALLATION PROCEDURE

I. GENERAL REQUIREMENTS - Order of Installation

A. The Thermo-Lag shall be installed on conduit fittings (e.g., LB and LS) and junction boxes before installing on conduit.

B. After completion of conduit fittings and junction boxes, the preformed sections of Thermo-Lag for the conduits shall be installed.

C. After completion of the conduit, the supports shall be protected with Thermo-Lag for the required distance.

D. For assemblies requiring multiple layers of Thermo-Lag, the first layer shall be completed before starting the second layer. The second layer shall be applied in the same sequence as the first (i.e., fittings and boxes first, conduits second, supports last).

E. All conduit pieces shall be measured and recorded on a data sheet (see attached). The maximum and minimum thickness of each piece does not need to be recorded. The maximum and minimum for all the pieces on a conduit will be sufficient.

F. Upon completion of the installation and before the tie wires or bands are applied, the circumference of the configuration shall be measured to ensure it is within acceptable tolerances.

THERMO-LAG
INSTALLATION PROCEDURE

I. CONDUIT WITH NO UPGRADE

A. ALWAYS INSTALL THE THERMO-LAG TO THE CONDUIT BEFORE INSTALLING IT TO THE SUPPORTS.

B. Cut the preformed conduits sections of Thermo-Lag to fit around any supports and dry fit to check for clearances and proper fit (try to minimize any gaps between pieces of Thermo-Lag). Butter entire inside of the preformed sections, edges and ends and attach to the conduit with tie wire. Smooth down seams and joints where the trowel grade has squeezed out.

C. To install preformed sections on curved sections of conduit, the Thermo-Lag must be cut down to the stress skin in several places (usually requires at least 5 or 6 cuts) for the outside bend. The inside bend requires wedges to be cut out of the Thermo-Lag, but do not cut the stress skin. These pieces are then bent around the curved section of conduit (NOTE: expect the stress 2kin to tear). Where the stress skin tears, cut a piece of 0.017 diameter stainless steel stress skin to fit inside the preformed section and overlap the tear one to two inches. Butter the entire inside of the preformed sections, edges and ends with trowel grade and install on the conduit with tie wire. Fill in the open cuts with trowel grade and smooth out the edges and seams where the trower grade squeezed out.

D. Allow the installation to dry overnight. Remove the tie wires and rasp down the rough spots. Apply a thin (skim) coat (approximately 1/16-inch thick) of trowel grade over the installation and allow to dry at least two hours. Smooth down the installation with a pad (Scotch-Brite) and water and allow to dry overnight.

E. Attach tie wires or ½-inch banding. The maximum spacing for the tie wires/bands shall be 6-inches on straight sections and 4-inches on curved sections.

II. CONDUITS WITH AN UPGRADE

A. ALWAYS INSTALL THE THERMO-LAG TO THE CONDUIT BEFORE INSTALLING IT TO THE SUPPORTS.

B. Cut the preformed conduits sections of Thermo-Lag to fit around any supports and dry fit to check for clearances and proper fit (try to minimize any gaps between pieces of Thermo-Lag). Butter entire inside of the preformed sections, edges and ends and attach to the conduit with tie wire. Smooth down seams and joints where the trowel grade has squeezed out.

C. To install preformed sections on curved sections of conduit, the Thermo-Lag must be cut down to the stress skin in several places (usually requires at least 5 or 6 cuts) for the outside bend. The inside bend requires wedges to be cut out of the Thermo-Lag, but do not cut the stress skin. These pieces are then bent around the curved section of conduit (NOTE: expect the stress skin to tear). Where the stress skin tears, cut a piece of 0.017 diameter stainless steel stress skin to fit inside the preformed section and overlap the tear one to two inches. Butter the entire inside of the preformed sections, edges and ends with trowel grade and install on the conduit with tie wire. Fill in the open cuts with trowel grade and smooth out the edges and seams where the trowel grade squeezed out.

D. Allow the installation to dry overnight. Remove the tie wires. Wrap the curved section with either 0.011 diameter stainless steel wire mesh or 0.017 diameter stainless steel stress skin and attached it with tie wire.

E. Repeat steps A through C for the additional layer of ¼-inch thick preformed Thermo-Lag.

F. Allow the installation to dry overnight. Remove the tie wires and rasp down the rough spots. Apply a thin coat (skim) coat (approximately 1/16-inch thick) of trowel grade over the installation and allow to dry at least two hours. Smooth down the installation with an abrasive pad (Scotch-Brite) and water and allow to dry overnight.

G. Attach tie wires or ½-inch banding. The maximum spacing for the tie wires/bands shall be 6-inches on straight sections and 4-inches on curved sections.

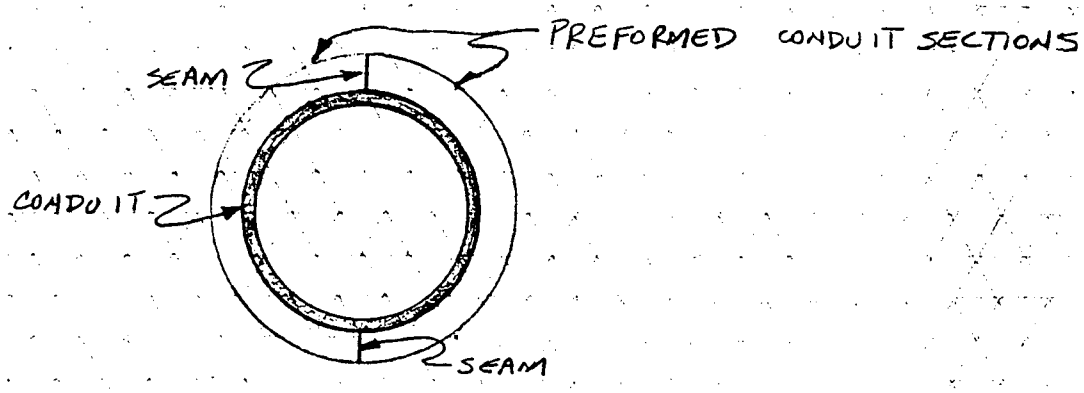

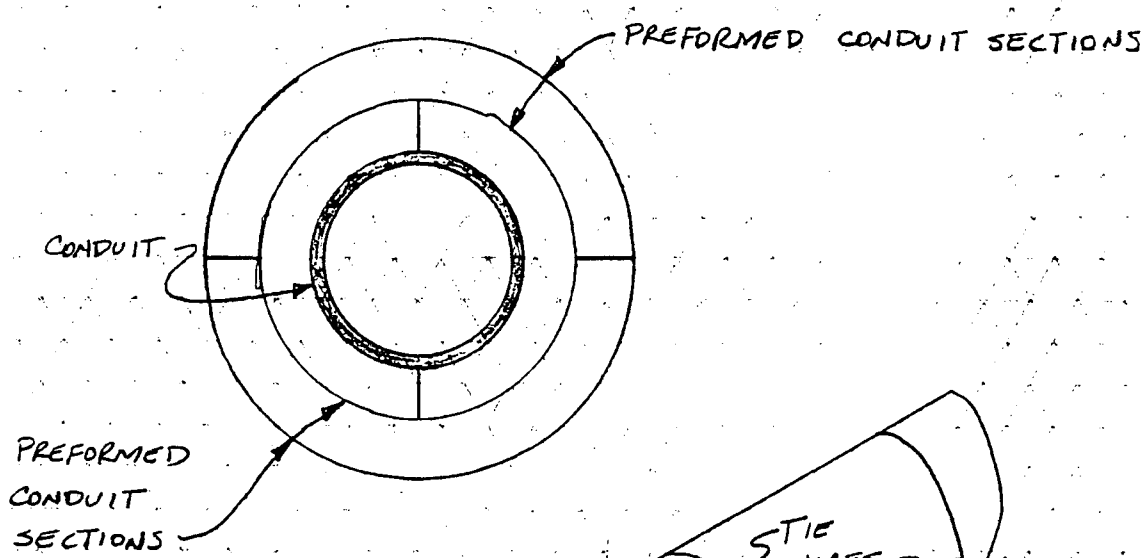

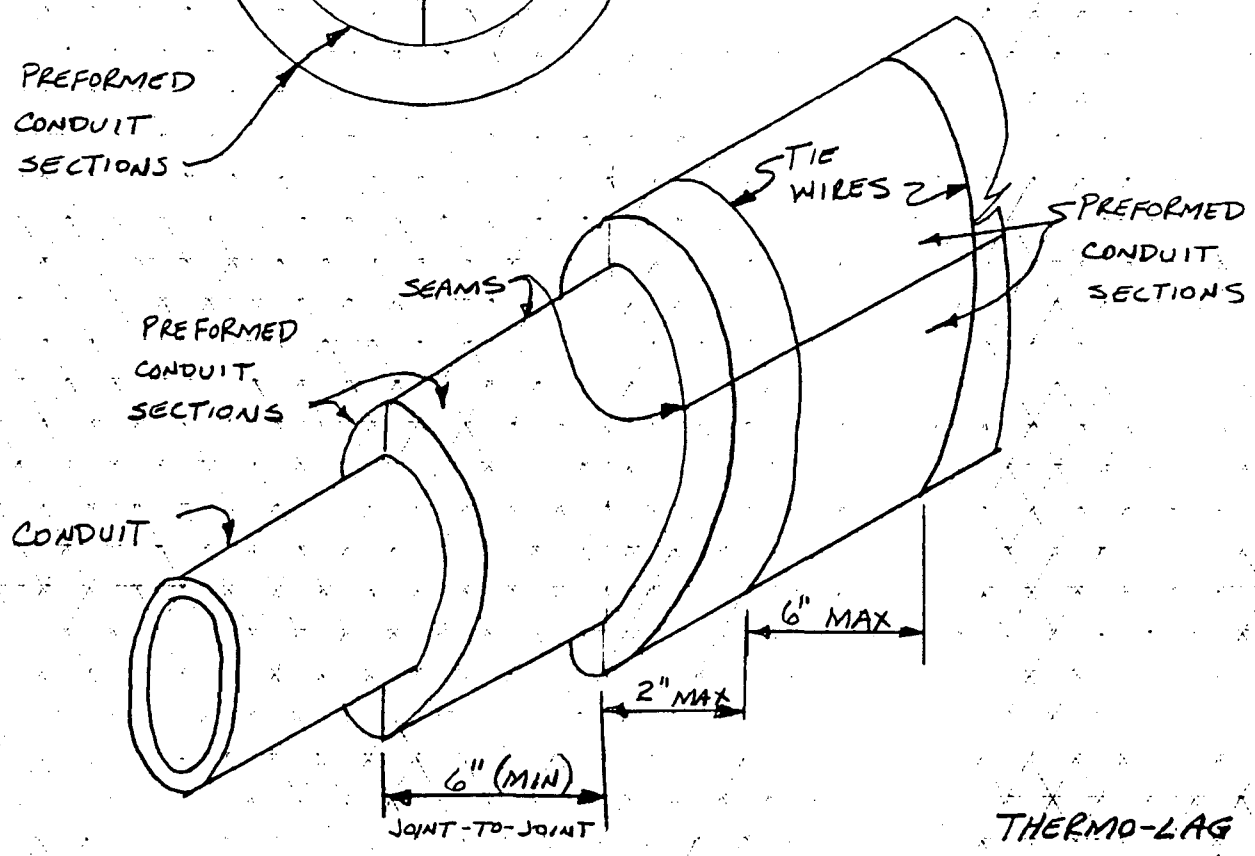

THERMO-LAG
INSTALLATION SKETCH
1/19/93

TOLERANCES FOR THERMO-LAG INSTALLATIONS

REQUIREMENT

Installations of Thermo-Lag shall be checked by QA/QC to verify it has been installed per the installation procedure and that the thickness of the Thermo-Lag is within acceptable limits.

BACKGROUND

The Thermo-Lag manufacturing process results in tolerances of plus/minus 1/8-inch. The vendor's one hour fire barrier system consisted of preformed conduit section for each size of conduit (i.e., 3/4-inch through 5-inch nominal diameters) and 4' x 6½' sheets. The thickness of these pieces was listed as 5/8-inch ± 1/8-inch. What the vendor guaranteed was that no piece would have a thickness less than 1/2-inch. In reality, what TVA has experienced is most preformed sections have thicknesses between 5/8-inch and 3/4-inch with some pieces up to 1-inch thick. This varying thickness of each piece presents three different problems:

1. In a Fire Test the thicker the Thermo-Lag, the better it performs (i.e., the thicker the Thermo-Lag the more protection).

2. In an Ampacity Test the thinner the Thermo-Lag, the better it performs (i.e., the thinner the Thermo-Lag the less ampacity derating has to be applied).

3. QC needs to have a way to verify that the installation has been installed to the correct thickness.

These problems are amplified for those size conduits that require an additional layer of protection (e.g., smaller conduits require an upgrade of an additional 3/8-inch ± 1/8-inch overlay).

RESOLUTION

To determine the required thickness a nominal 5/8-inch thickness will be used for the base layer and a nominal 3/8-inch thickness will be used for the upgrade. The composite sections are added together to form a net thickness of 1-inch (5/8 + 3/8 = 1). The overall diameter tolerance will be set at ± 1/8-inch.

The maximum and minimum thickness of a completed installation will be assured by maintaining a circumference within the limits listed in Attachment A. The circumferences were derived from the following equation.

$$C = (Dc + 2T)\pi$$

C = Circumference Dc = Diameter of conduit T = Thickness of Thermo-Lag

MAXIMUM AND MINIMUM THICKNESS OF THERMO-LAG

CONDUIT SIZE	APPLICATION	CIRCUMFERENCE (INCHES) MINIMUM	CIRCUMFERENCE (INCHES) MAXIMUM
1"	5/8	7-11/16	8-1/2
1"	3/8 + 3/8	8-1/2	9-1/4
1"	5/8 + 3/8	9-5/8	11-1/4
1½	3/8 + 3/8	9-1/8	10-11/16
2	3/8 + 3/8	11-3/8	13
2	5/8	10-5/8	12-3/16
3	3/8 + 3/8	14-15/16	16-1/2
3	5/8	14-1/8	15-3/4
4	5/8	17-1/4	18-7/8
4	3/8 + 3/8	18-1/2	19-1/4
4	5/8 +3/8	20	20-13/16
5	5/8	20-7/16	22

THIS PAGE IS INTENTIONALLY LEFT BLANK

DATA SHEET

INSPECTION NO. 93-0501-1 (4" conduit w/ 1/2" base)

LOT/CONTRACT NO. 91NNB-75871A (1/2" TL) 93NNS-75561C (Trowel) EXPIRATION DATE Trowel only 07-93

CRAFTSMAN G. D. Headrick / Gerry D. Headrick DATE 2-2-93

L. W. Starnes / Larry A. Starnes DATE 2-2-93

COGNIZANT ENGINEER W. M. Roop, Jr. / W. M. Roop Jr. DATE 2-2-93

QC INSPECTOR C. L. Rutledge / C L Rutledge DATE 2-2-93

MATERIAL CONDITION

CONDUIT OK PANELS N/A TIE WIRE OK MESH N/A

PROCEDURE Memo from R. M. Johnson to R. E. Miller dated 01/20/1993, "Thermo-lag Testing Program" (T25 93 0120 836).

DRAWING Same as procedure listed above.

HOLD POINTS

	LAYER 1	LAYER 2
JOINTS PRE-BUTTERED	Y	N/A
FASTENER SPACING	OK	N/A
18" RULE ON SUPPORTS	N/A	N/A
MESH OVERLAP	N/A	N/A
TROWEL GRADE THICKNESS	N/A	N/A
SEAMS OFFSET	Y	N/A

REMARKS:

Preformed sections minimum thickness, layer 1: 0.50 inches

Preformed sections maximum thickness, layer 1: 0.80 inches

Preformed sections minimum thickness, layer 2: N/A

Preformed sections maximum thickness, layer 2: N/A

Average circumference of finished sample: 19.45 inches

Average Thermolag thickness on finished sample: 0.807 inches

Date sample completed: January 27, 1993

DATA SHEET

INSPECTION NO. 93-0501-2 (4" conduit w/ 1/2" base & 1/4" upgrade)
93NNS-75561C (1/4" TL)
91NNB-75871A (1/2" TL)
LOT/CONTRACT NO. 93NNS-75561C (Trowel) EXPIRATION DATE Trowel only 07-93

CRAFTSMAN G. D. Headrick / George D. Headrick DATE 2-2-93

L. W. Starnes / Larry W. Starnes DATE 2-2-93

COGNIZANT ENGINEER W. M. Roop, Jr. / W. M. Roop Jr. DATE 2-2-93

QC INSPECTOR C. L. Rutledge / C L Rutledge DATE 2-2-93

MATERIAL CONDITION

CONDUIT OK PANELS N/A TIE WIRE OK MESH N/A

PROCEDURE Memo from R. M. Johnson to R. E. Miller dated 01/20/1993, "Thermo-lag Testing Program" (T25 93 0120 836).

DRAWING Same as procedure listed above.

HOLD POINTS

	LAYER 1	LAYER 2
JOINTS PRE-BUTTERED	Y	Y
FASTENER SPACING	OK	OK
18" RULE ON SUPPORTS	N/A	N/A
MESH OVERLAP	N/A	N/A
TROWEL GRADE THICKNESS	N/A	N/A
SEAMS OFFSET	Y	Y

REMARKS:

Preformed sections minimum thickness, layer 1: 0.51 inches

Preformed sections maximum thickness, layer 1: 0.73 inches

Preformed sections minimum thickness, layer 2: 0.25 inches

Preformed sections maximum thickness, layer 2: 0.45 inches

Average circumference of finished sample: 22.51 inches

Average Thermolag thickness on finished sample: 1.294 inches

Date sample completed: February 2, 1993

DATA SHEET

INSPECTION NO. 93-0501-3 (4" conduit w/ 1/4" base & 1/4" upgrade)

LOT/CONTRACT NO. 93NNS-75561C (1/4" TL) 93NNS-75561C (Trowel) EXPIRATION DATE Trowel only 07-93

CRAFTSMAN G. D. Headrick / Henry D. Headrick DATE 2-2-93

L. W. Starnes / Larry A. Starnes DATE 2-2-93

COGNIZANT ENGINEER W. M. Roop, Jr. / W. M. Roop DATE 2-2-93

QC INSPECTOR C. L. Rutledge / C L Rutledge DATE 2-2-93

MATERIAL CONDITION

CONDUIT OK PANELS N/A TIE WIRE OK MESH N/A

PROCEDURE Memo from R. M. Johnson to R. E. Miller dated 01/20/1993, "Thermo-lag Testing Program" (T25 93 0120 836).

DRAWING Same as procedure listed above.

HOLD POINTS

	LAYER 1	LAYER 2
JOINTS PRE-BUTTERED	Y	Y
FASTENER SPACING	OK	OK
18" RULE ON SUPPORTS	N/A	N/A
MESH OVERLAP	N/A	N/A
TROWEL GRADE THICKNESS	N/A	N/A
SEAMS OFFSET	Y	Y

REMARKS:

Preformed sections minimum thickness, layer 1: 0.34 inches

Preformed sections maximum thickness, layer 1: 0.55 inches

Preformed sections minimum thickness, layer 2: 0.25 inches

Preformed sections maximum thickness, layer 2: 0.45 inches

Average circumference of finished sample: 21.36 inches

Average Thermolag thickness on finished sample: 1.111 inches

Date sample completed: February 2, 1993

DATA SHEET

INSPECTION NO. 93-0501-4 (4" conduit with no Thermolag)

LOT/CONTRACT NO. N/A EXPIRATION DATE N/A

CRAFTSMAN G. D. Headrick / Henry D. Headrick DATE 2-2-93

L. W. Starnes / Larry A. Starnes DATE 2-2-93

COGNIZANT ENGINEER W. M. Roop, Jr. / W M Roop Jr DATE 2-2-93

QC INSPECTOR C. L. Rutledge / C L Rutledge DATE 2-2-93

MATERIAL CONDITION

CONDUIT OK PANELS N/A TIE WIRE OK MESH N/A

PROCEDURE Memo from R. M. Johnson to R. E. Miller dated 01/20/1993, "Thermo-lag Testing Program" (T25 93 0120 836).

DRAWING Same as procedure listed above.

HOLD POINTS

	LAYER 1	LAYER 2
JOINTS PRE-BUTTERED	N/A	N/A
FASTENER SPACING	N/A	N/A
18" RULE ON SUPPORTS	N/A	N/A
MESH OVERLAP	N/A	N/A
TROWEL GRADE THICKNESS	N/A	N/A
SEAMS OFFSET	N/A	N/A

REMARKS:

Preformed sections minimum thickness, layer 1: N/A

Preformed sections maximum thickness, layer 1: N/A

Preformed sections minimum thickness, layer 2: N/A

Preformed sections maximum thickness, layer 2: N/A

Average circumference of finished sample: 14.38 inches

Average Thermolag thickness on finished sample: N/A

Date sample completed: February 2, 1993

DATA SHEET

INSPECTION NO. 93-0501-5 (1" conduit w/ 1/2" base)

LOT/CONTRACT NO. 91NNB-75871A (1/2" TL) 93NNS-75561C (Trowel) EXPIRATION DATE Trowel only 07-93

CRAFTSMAN G. D. Headrick / Henry D. Headrick DATE 2-2-93

L. W. Starnes / Larry A. Starnes DATE 2-2-93

COGNIZANT ENGINEER W. M. Roop, Jr. / W M Roop Jr DATE 2-2-93

QC INSPECTOR C. L. Rutledge / C L Rutledge DATE 2-2-93

MATERIAL CONDITION

CONDUIT OK PANELS N/A TIE WIRE OK MESH N/A

PROCEDURE Memo from R. M. Johnson to R. E. Miller dated 01/20/1993, "Thermo-lag Testing Program" (T25 93 0120 836).

DRAWING Same as procedure listed above.

HOLD POINTS

	LAYER 1	LAYER 2
JOINTS PRE-BUTTERED	Y	N/A
FASTENER SPACING	OK	N/A
18" RULE ON SUPPORTS	N/A	N/A
MESH OVERLAP	N/A	N/A
TROWEL GRADE THICKNESS	N/A	N/A
SEAMS OFFSET	Y	N/A

REMARKS:

Preformed sections minimum thickness, layer 1: 0.50 inches

Preformed sections maximum thickness, layer 1: 0.89 inches

Preformed sections minimum thickness, layer 2: N/A

Preformed sections maximum thickness, layer 2: N/A

Average circumference of finished sample: 9.38 inches

Average Thermolag thickness on finished sample: 0.796 inches

Date sample completed: January 27, 1993

DATA SHEET

INSPECTION NO. 93-0501-6 (1" conduit w/ 1/2" base & 1/4" upgrade)
93NNS-75561C (1/4" TL)
91NNB-75871A (1/2" TL) Trowel only
LOT/CONTRACT NO. 93NNS-75561C (Trowel) EXPIRATION DATE 07-93

CRAFTSMAN G. D. Headrick / Henry D. Headrick DATE 2-2-93

L. W. Starnes / Larry W. Starnes DATE 2-2-93

COGNIZANT ENGINEER W. M. Roop, Jr. / W. M. Roop, Jr. DATE 2-2-93

QC INSPECTOR C. L. Rutledge / C L Rutledge DATE 2-2-93

MATERIAL CONDITION

CONDUIT OK PANELS N/A TIE WIRE OK MESH N/A

PROCEDURE Memo from R. M. Johnson to R. E. Miller dated 01/20/1993, "Thermo-lag Testing Program" (T25 93 0120 836).

DRAWING Same as procedure listed above.

HOLD POINTS

	LAYER 1	LAYER 2
JOINTS PRE-BUTTERED	Y	Y
FASTENER SPACING	OK	OK
18" RULE ON SUPPORTS	N/A	N/A
MESH OVERLAP	N/A	N/A
TROWEL GRADE THICKNESS	N/A	N/A
SEAMS OFFSET	Y	Y

REMARKS:

Preformed sections minimum thickness, layer 1: 0.50 inches

Preformed sections maximum thickness, layer 1: 0.95 inches

Preformed sections minimum thickness, layer 2: 0.34 inches

Preformed sections maximum thickness, layer 2: 0.53 inches

Average circumference of finished sample: 12.656 inches

Average Thermolag thickness on finished sample: 1.317 inches

Date sample completed: January 30, 1993

DATA SHEET

INSPECTION NO. 93-0501-7 (1" conduit w/ 1/4" base & 1/4" upgrade)

LOT/CONTRACT NO. 93NNS-75561C (1/4" TL) / 93NNS-75561C (Trowel) EXPIRATION DATE Trowel only 07-93

CRAFTSMAN G. D. Headrick / George D. Headrick DATE 2-2-93

L. W. Starnes / Larry A. Starnes DATE 2-2-93

COGNIZANT ENGINEER W. M. Roop, Jr. / W. M. Roop Jr. DATE 2-2-93

QC INSPECTOR C. L. Rutledge / C L Rutledge DATE 2-2-93

MATERIAL CONDITION

CONDUIT OK PANELS N/A TIE WIRE OK MESH N/A

PROCEDURE Memo from R. M. Johnson to R. E. Miller dated 01/20/1993, "Thermo-lag Testing Program" (T25 93 0120 836).

DRAWING Same as procedure listed above.

HOLD POINTS

	LAYER 1	LAYER 2
JOINTS PRE-BUTTERED	Y	Y
FASTENER SPACING	OK	OK
18" RULE ON SUPPORTS	N/A	N/A
MESH OVERLAP	N/A	N/A
TROWEL GRADE THICKNESS	N/A	N/A
SEAMS OFFSET	Y	Y

REMARKS:

Preformed sections minimum thickness, layer 1: 0.30 inches

Preformed sections maximum thickness, layer 1: 0.54 inches

Preformed sections minimum thickness, layer 2: 0.25 inches

Preformed sections maximum thickness, layer 2: 0.43 inches

Average circumference of finished sample: 11.35 inches

Average Thermolag thickness on finished sample: 1.109 inches

Date sample completed: February 1, 1993

DATA SHEET

INSPECTION NO. 93-0501-8 (1" conduit with no Thermolag)

LOT/CONTRACT NO. N/A EXPIRATION DATE N/A

CRAFTSMAN G. D. Headrick / George D. Headrick DATE 2-2-93

L. W. Starnes / Larry A. Starnes DATE 2-2-93

COGNIZANT ENGINEER W. M. Roop, Jr. / W. M. Roop Jr. DATE 2-2-93

QC INSPECTOR C. L. Rutledge / C L Rutledge DATE 2-2-93

MATERIAL CONDITION

CONDUIT OK PANELS N/A TIE WIRE OK MESH N/A

PROCEDURE Memo from R. M. Johnson to R. E. Miller dated 01/20/1993, "Thermo-lag Testing Program" (T25 93 0120 836).

DRAWING Same as procedure listed above.

HOLD POINTS

	LAYER 1	LAYER 2
JOINTS PRE-BUTTERED	N/A	N/A
FASTENER SPACING	N/A	N/A
18" RULE ON SUPPORTS	N/A	N/A
MESH OVERLAP	N/A	N/A
TROWEL GRADE THICKNESS	N/A	N/A
SEAMS OFFSET	N/A	N/A

REMARKS:

Preformed sections minimum thickness, layer 1: N/A

Preformed sections maximum thickness, layer 1: N/A

Preformed sections minimum thickness, layer 2: N/A

Preformed sections maximum thickness, layer 2: N/A

Average circumference of finished sample: 4.38 inches

Average Thermolag thickness on finished sample: N/A

Date sample completed: February 2, 1992

ATTACHMENT E

TEST DATA FROM 3 CONDUCTOR TESTS

AMPACITY TEST. JOB NUMBER 93-0501. SAMPLE NUMBER 93-0501-01 DATA FILE ITEM01NO.003 03-21-1993 E-1

POSITION 1			POSITION 2			POSITION 3			POSITION AVERAGE			AVE		AMBIENT TEMPERATURE				AMPS		
Trd1	Tbk1	Twh1	Trd2	Tbk2	Twh2	Trd3	Tbk3	Twh3	Tav1	Tav2	Tav3	Tvave	SLOPE	Tam1	Tam2	Tam3	Taav	It	I'	TIME
87.8	87.5	89.3	88.4	88.4	90.2	89.6	89.7	91.4	88.2	89.0	90.3	89.16	0.03	41.0	40.9	40.5	40.8	243.44	244.93	19:09:12
87.8	87.5	89.3	88.4	88.4	90.2	89.6	89.8	91.4	88.2	89.0	90.3	89.17	0.03	40.8	40.9	40.5	40.8	242.96	244.32	19:10:12
87.8	87.5	89.3	88.4	88.4	90.3	89.7	89.8	91.4	88.2	89.0	90.3	89.17	0.02	40.9	40.9	40.5	40.8	243.28	244.63	19:11:12
87.8	87.5	89.3	88.4	88.4	90.3	89.6	89.8	91.4	88.2	89.0	90.3	89.18	0.02	40.9	40.8	40.5	40.8	242.96	244.27	19:12:12
87.8	87.5	89.3	88.4	88.4	90.2	89.6	89.7	91.4	88.2	89.0	90.3	89.14	0.02	40.9	40.8	40.5	40.7	242.72	244.02	19:13:12
87.8	87.5	89.3	88.4	88.4	90.2	89.6	89.7	91.4	88.2	89.0	90.3	89.17	0.01	40.9	40.9	40.5	40.7	242.40	243.72	19:14:12
87.8	87.5	89.3	88.4	88.4	90.3	89.6	89.7	91.4	88.2	89.0	90.3	89.16	0.01	40.9	40.9	40.5	40.8	242.40	243.72	19:15:12
87.8	87.5	89.3	88.4	88.4	90.2	89.6	89.7	91.4	88.2	89.0	90.3	89.15	0.01	40.8	40.9	40.5	40.7	241.92	243.28	19:16:12
87.7	87.5	89.3	88.4	88.4	90.2	89.6	89.7	91.4	88.2	89.0	90.3	89.15	0.01	40.9	40.8	40.5	40.7	242.56	243.86	19:17:12
87.7	87.4	89.3	88.4	88.4	90.2	89.6	89.7	91.4	88.2	89.0	90.2	89.14	0.00	40.8	40.8	40.5	40.7	242.08	243.37	19:18:12
87.7	87.4	89.3	88.4	88.4	90.2	89.6	89.7	91.4	88.2	89.0	90.2	89.14	0.00	40.8	40.8	40.5	40.7	243.60	244.91	19:19:12
87.7	87.4	89.3	88.4	88.4	90.2	89.6	89.7	91.4	88.2	89.0	90.2	89.13	-0.00	40.8	40.8	40.5	40.7	243.92	245.22	19:20:12
87.8	87.5	89.3	88.4	88.4	90.3	89.6	89.8	91.4	88.2	89.0	90.3	89.16	-0.01	40.8	40.8	40.5	40.7	244.72	245.93	19:21:12
87.8	87.5	89.3	88.4	88.4	90.2	89.6	89.7	91.4	88.2	89.0	90.3	89.16	-0.01	40.8	40.8	40.4	40.7	244.08	245.24	19:22:12
87.8	87.5	89.3	88.4	88.4	90.2	89.6	89.7	91.4	88.2	89.0	90.3	89.15	-0.01	40.8	40.8	40.5	40.7	244.24	245.48	19:23:12
87.8	87.5	89.3	88.4	88.4	90.2	89.6	89.7	91.4	88.2	89.0	90.3	89.15	-0.01	40.8	40.8	40.5	40.7	243.92	245.19	19:24:12
87.7	87.4	89.3	88.4	88.4	90.2	89.6	89.7	91.4	88.2	89.0	90.2	89.12	-0.02	40.8	40.9	40.4	40.7	244.80	246.11	19:25:12
87.7	87.4	89.3	88.4	88.4	90.2	89.6	89.7	91.4	88.2	89.0	90.2	89.14	-0.02	40.8	40.9	40.5	40.7	244.08	245.37	19:26:12
87.8	87.5	89.3	88.4	88.4	90.2	89.6	89.7	91.4	88.2	89.0	90.3	89.14	-0.03	40.8	40.8	40.5	40.7	244.48	245.77	19:27:12
87.7	87.4	89.3	88.4	88.4	90.2	89.6	89.7	91.4	88.2	89.0	90.2	89.14	-0.03	40.8	40.8	40.5	40.7	243.76	245.06	19:28:12
87.8	87.5	89.3	88.4	88.4	90.2	89.6	89.7	91.4	88.2	89.0	90.3	89.16	-0.04	40.8	40.8	40.5	40.7	243.92	245.21	19:29:12
87.7	87.4	89.3	88.4	88.4	90.2	89.6	89.7	91.4	88.2	89.0	90.2	89.13	-0.04	40.8	40.8	40.5	40.7	243.92	245.22	19:30:12
87.7	87.4	89.3	88.4	88.4	90.2	89.6	89.7	91.4	88.2	89.0	90.2	89.13	-0.04	40.8	40.8	40.4	40.7	244.72	246.01	19:31:12
87.8	87.5	89.3	88.4	88.4	90.2	89.6	89.7	91.4	88.2	89.0	90.2	89.14	-0.05	40.8	40.8	40.4	40.7	244.16	245.41	19:32:12
87.8	87.5	89.3	88.4	88.4	90.2	89.6	89.7	91.4	88.2	89.0	90.2	89.14	-0.05	40.8	40.8	40.4	40.7	244.64	245.86	19:33:12
87.7	87.4	89.3	88.4	88.4	90.2	89.6	89.7	91.4	88.1	89.0	90.2	89.11	-0.05	40.8	40.8	40.5	40.7	244.08	245.42	19:34:12
87.8	87.5	89.3	88.4	88.4	90.2	89.6	89.7	91.4	88.2	89.0	90.2	89.15	-0.06	40.8	40.9	40.5	40.7	244.24	245.52	19:35:12
87.7	87.4	89.3	88.4	88.4	90.2	89.6	89.7	91.4	88.2	89.0	90.2	89.14	-0.06	40.8	40.8	40.4	40.7	243.92	245.09	19:36:12
87.7	87.4	89.3	88.4	88.4	90.2	89.6	89.7	91.4	88.2	89.0	90.2	89.13	-0.06	40.8	40.8	40.4	40.7	245.12	246.43	19:37:12
87.7	87.4	89.3	88.4	88.4	90.2	89.6	89.7	91.4	88.2	89.0	90.2	89.12	-0.06	40.8	40.8	40.4	40.7	244.72	245.96	19:38:12
87.7	87.4	89.3	88.4	88.4	90.2	89.6	89.7	91.4	88.2	89.0	90.2	89.12	-0.06	40.8	40.8	40.4	40.7	244.88	246.13	19:39:12
87.7	87.4	89.3	88.4	88.4	90.2	89.6	89.7	91.4	88.2	89.0	90.2	89.12	-0.06	40.8	40.9	40.4	40.7	243.92	245.22	19:40:12
87.7	87.4	89.3	88.4	88.4	90.2	89.6	89.7	91.4	88.2	89.0	90.2	89.13	-0.06	40.8	40.8	40.4	40.7	243.84	245.07	19:41:12
87.7	87.4	89.3	88.3	88.4	90.2	89.6	89.7	91.4	88.1	89.0	90.2	89.10	-0.07	40.8	40.8	40.4	40.7	243.76	245.08	19:42:12
87.7	87.4	89.3	88.3	88.4	90.2	89.6	89.7	91.4	88.1	89.0	90.2	89.10	-0.07	40.8	40.8	40.4	40.7	244.40	245.68	19:43:12
87.7	87.4	89.3	88.3	88.4	90.2	89.6	89.7	91.4	88.1	89.0	90.2	89.11	-0.07	40.7	40.8	40.5	40.7	244.48	245.78	19:44:12
87.7	87.4	89.3	88.4	88.4	90.2	89.6	89.7	91.4	88.2	89.0	90.2	89.12	-0.07	40.8	40.8	40.4	40.7	245.20	246.50	19:45:12
87.7	87.4	89.3	88.4	88.4	90.2	89.6	89.7	91.4	88.2	89.0	90.2	89.12	-0.07	40.8	40.8	40.4	40.7	244.72	245.98	19:46:12
87.7	87.4	89.3	88.4	88.4	90.2	89.6	89.7	91.4	88.2	89.0	90.2	89.12	-0.07	40.8	40.8	40.4	40.7	245.28	246.48	19:47:12
87.7	87.4	89.3	88.4	88.4	90.2	89.6	89.7	91.4	88.1	89.0	90.2	89.11	-0.07	40.8	40.8	40.4	40.7	244.88	246.09	19:48:12
87.7	87.4	89.3	88.4	88.4	90.2	89.6	89.7	91.4	88.2	89.0	90.2	89.12	-0.07	40.8	40.8	40.4	40.7	244.80	245.97	19:49:12
87.7	87.4	89.3	88.4	88.4	90.2	89.6	89.7	91.4	88.1	89.0	90.2	89.11	-0.07	40.8	40.8	40.4	40.7	245.68	246.94	19:50:12
87.7	87.4	89.3	88.4	88.4	90.2	89.6	89.7	91.4	88.2	89.0	90.2	89.12	-0.08	40.8	40.8	40.4	40.7	246.08	247.34	19:51:12
87.7	87.4	89.3	88.4	88.4	90.2	89.6	89.7	91.4	88.1	89.0	90.2	89.11	-0.08	40.8	40.8	40.4	40.7	245.36	246.62	19:52:12
87.7	87.4	89.3	88.4	88.4	90.2	89.6	89.7	91.4	88.1	89.0	90.2	89.11	-0.08	40.8	40.8	40.4	40.6	246.00	247.22	19:53:12
87.7	87.4	89.3	88.4	88.4	90.2	89.6	89.7	91.4	88.1	89.0	90.2	89.12	-0.08	40.8	40.8	40.4	40.7	245.36	246.64	19:54:12
87.7	87.4	89.3	88.4	88.4	90.2	89.6	89.7	91.4	88.2	89.0	90.2	89.14	-0.07	40.8	40.8	40.4	40.6	245.68	246.79	19:55:12
87.7	87.4	89.3	88.4	88.4	90.2	89.6	89.7	91.4	88.2	89.0	90.2	89.13	-0.07	40.8	40.8	40.4	40.7	245.12	246.33	19:56:12
87.7	87.4	89.3	88.4	88.4	90.2	89.6	89.7	91.4	88.2	89.0	90.2	89.13	-0.07	40.8	40.8	40.4	40.7	244.88	246.12	19:57:12
87.7	87.4	89.3	88.4	88.4	90.2	89.6	89.7	91.4	88.1	89.0	90.2	89.11	-0.07	40.8	40.8	40.4	40.7	244.32	245.55	19:58:12
87.7	87.5	89.3	88.4	88.4	90.2	89.6	89.7	91.4	88.2	89.0	90.2	89.13	-0.07	40.8	40.8	40.4	40.7	245.12	246.30	19:59:12
87.7	87.4	89.3	88.4	88.4	90.2	89.6	89.7	91.4	88.2	89.0	90.2	89.12	-0.07	40.8	40.8	40.4	40.7	245.04	246.29	20:00:12
87.7	87.4	89.3	88.4	88.4	90.2	89.6	89.7	91.4	88.1	89.0	90.2	89.12	-0.06	40.8	40.8	40.4	40.7	245.76	247.12	20:01:12
87.7	87.4	89.3	88.4	88.4	90.2	89.6	89.7	91.4	88.1	89.0	90.2	89.10	-0.06	40.8	40.8	40.4	40.7	244.96	246.23	20:02:12
87.7	87.4	89.3	88.4	88.4	90.2	89.6	89.7	91.4	88.1	89.0	90.2	89.10	-0.06	40.8	40.8	40.4	40.6	246.00	247.26	20:03:12
87.7	87.4	89.3	88.4	88.4	90.2	89.6	89.7	91.4	88.1	89.0	90.2	89.11	-0.06	40.8	40.8	40.4	40.7	245.52	246.82	20:04:12
87.7	87.4	89.3	88.3	88.4	90.2	89.5	89.7	91.4	88.2	89.0	90.2	89.11	-0.06	40.8	40.8	40.4	40.7	245.84	247.16	20:05:12
87.7	87.5	89.3	88.4	88.4	90.2	89.6	89.7	91.4	88.2	89.0	90.2	89.13	-0.06	40.8	40.8	40.5	40.7	245.36	246.62	20:06:12
87.7	87.4	89.3	88.4	88.4	90.2	89.6	89.7	91.4	88.1	89.0	90.2	89.11	-0.06	40.8	40.8	40.4	40.7	245.60	246.84	20:07:12
87.7	87.4	89.3	88.4	88.4	90.2	89.6	89.7	91.4	88.1	89.0	90.2	89.11	-0.05	40.8	40.7	40.4	40.6	244.48	245.64	20:08:12

COMMENTS ______________________________

Tested By *Frank A. Deming* Date *3-22-93* Reviewed By *Cynthia L. Huttly* Date *3-22-93*

AMPACITY TEST. JOB NUMBER 93-0501. SAMPLE NUMBER 93-0501-01 DATA FILE ITEM01NO.003 03-21-1993 E-2

POSITION 1			POSITION 2			POSITION 3			POSITION AVERAGE			AVE		AMBIENT TEMPERATURE				AMPS		
Trd1	Tbk1	Twh1	Trd2	Tbk2	Twh2	Trd3	Tbk3	Twh3	Tav1	Tav2	Tav3	Twave	SLOPE	Tam1	Tam2	Tam3	Taav	It	I'	TIME
87.7	87.4	89.3	88.4	88.4	90.2	89.6	89.7	91.4	88.2	89.0	90.2	89.12	-0.05	40.8	40.7	40.4	40.6	244.80	245.95	20:09:12
87.7	87.4	89.3	88.4	88.4	90.2	89.6	89.7	91.4	88.2	89.0	90.2	89.12	-0.05	40.8	40.8	40.4	40.7	244.08	245.29	20:10:12
87.7	87.4	89.3	88.4	88.4	90.2	89.6	89.7	91.4	88.2	89.0	90.2	89.12	-0.05	40.8	40.8	40.4	40.6	244.40	245.57	20:11:12
87.7	87.4	89.3	88.3	88.4	90.2	89.6	89.7	91.4	88.1	89.0	90.2	89.10	-0.05	40.8	40.7	40.4	40.6	244.56	245.78	20:12:12
87.7	87.4	89.3	88.3	88.3	90.2	89.6	89.7	91.4	88.1	89.0	90.2	89.10	-0.05	40.8	40.8	40.4	40.7	245.20	246.47	20:13:12
87.7	87.4	89.3	88.4	88.4	90.2	89.6	89.7	91.4	88.2	89.0	90.2	89.11	-0.04	40.8	40.8	40.4	40.7	244.88	246.19	20:14:12
87.7	87.4	89.3	88.4	88.4	90.2	89.6	89.7	91.4	88.2	89.0	90.2	89.12	-0.04	40.8	40.8	40.4	40.7	244.88	246.11	20:15:12
87.7	87.4	89.3	88.4	88.4	90.2	89.6	89.7	91.4	88.1	89.0	90.2	89.11	-0.04	40.8	40.7	40.4	40.6	244.72	245.85	20:16:12
87.7	87.4	89.3	88.4	88.4	90.2	89.6	89.7	91.4	88.1	89.0	90.2	89.12	-0.04	40.8	40.8	40.4	40.6	245.12	246.30	20:17:12
87.7	87.4	89.3	88.4	88.4	90.2	89.6	89.7	91.4	88.2	89.0	90.2	89.12	-0.03	40.8	40.7	40.4	40.6	244.88	246.02	20:18:12
87.7	87.4	89.3	88.4	88.4	90.2	89.6	89.7	91.4	88.2	89.0	90.2	89.12	-0.03	40.8	40.8	40.4	40.6	245.52	246.66	20:19:12
87.7	87.4	89.3	88.4	88.4	90.2	89.6	89.7	91.4	88.2	89.0	90.2	89.12	-0.03	40.7	40.8	40.4	40.6	243.68	244.81	20:20:12
87.7	87.4	89.3	88.4	88.4	90.2	89.6	89.7	91.4	88.2	89.0	90.2	89.13	-0.03	40.8	40.8	40.4	40.7	244.64	245.83	20:21:12
87.8	87.4	89.3	88.4	88.4	90.2	89.6	89.7	91.4	88.2	89.0	90.2	89.13	-0.02	40.7	40.7	40.4	40.6	244.40	245.43	20:22:12
87.7	87.4	89.3	88.4	88.4	90.2	89.6	89.7	91.4	88.2	89.0	90.2	89.13	-0.02	40.8	40.7	40.3	40.6	244.16	245.24	20:23:12
87.8	87.4	89.3	88.4	88.4	90.2	89.6	89.7	91.4	88.2	89.0	90.2	89.13	-0.02	40.8	40.7	40.3	40.6	243.92	244.97	20:24:12
87.7	87.4	89.3	88.4	88.4	90.2	89.6	89.7	91.4	88.2	89.0	90.2	89.13	-0.02	40.7	40.7	40.4	40.6	244.72	245.83	20:25:12
87.7	87.4	89.3	88.4	88.4	90.2	89.6	89.7	91.4	88.2	89.0	90.2	89.12	-0.01	40.7	40.8	40.3	40.6	244.24	245.34	20:26:12
87.7	87.4	89.3	88.4	88.4	90.2	89.6	89.7	91.4	88.2	89.0	90.2	89.14	-0.01	40.8	40.7	40.4	40.6	245.60	246.71	20:27:12
87.8	87.5	89.3	88.4	88.4	90.2	89.6	89.7	91.4	88.2	89.0	90.2	89.14	-0.01	40.7	40.7	40.3	40.6	245.04	246.10	20:28:12
87.8	87.4	89.3	88.4	88.4	90.2	89.6	89.7	91.4	88.2	89.0	90.3	89.15	-0.00	40.8	40.7	40.3	40.6	244.88	245.86	20:29:12
87.7	87.4	89.3	88.4	88.4	90.2	89.6	89.7	91.4	88.2	89.0	90.2	89.14	0.00	40.7	40.8	40.4	40.6	244.32	245.37	20:30:12
87.7	87.4	89.3	88.4	88.4	90.2	89.6	89.7	91.4	88.1	89.0	90.2	89.11	0.00	40.7	40.7	40.3	40.6	241.60	242.67	20:31:12
87.7	87.4	89.3	88.4	88.4	90.2	89.6	89.7	91.4	88.2	89.0	90.2	89.12	0.00	40.7	40.7	40.3	40.6	244.56	245.56	20:32:12
87.7	87.4	89.3	88.4	88.4	90.2	89.6	89.7	91.4	88.2	89.0	90.2	89.12	0.01	40.7	40.7	40.4	40.6	245.52	246.61	20:33:12
87.7	87.4	89.3	88.4	88.4	90.2	89.6	89.7	91.4	88.2	89.0	90.2	89.12	0.01	40.7	40.7	40.3	40.6	245.28	246.30	20:34:12
87.7	87.4	89.3	88.4	88.4	90.2	89.6	89.7	91.4	88.2	89.0	90.2	89.12	0.01	40.7	40.7	40.3	40.6	245.36	246.39	20:35:12
87.7	87.4	89.3	88.3	88.4	90.2	89.6	89.7	91.4	88.1	89.0	90.2	89.11	0.01	40.8	40.7	40.3	40.6	243.84	244.88	20:36:12
87.7	87.4	89.3	88.4	88.4	90.2	89.6	89.7	91.4	88.1	89.0	90.2	89.11	0.01	40.7	40.8	40.4	40.6	244.80	245.90	20:37:12
87.7	87.4	89.3	88.4	88.4	90.2	89.6	89.7	91.4	88.2	89.0	90.2	89.12	0.01	40.7	40.7	40.3	40.6	244.40	245.38	20:38:12
87.7	87.4	89.3	88.4	88.4	90.2	89.6	89.7	91.4	88.2	89.0	90.2	89.12	0.01	40.7	40.7	40.3	40.6	245.04	246.06	20:39:12
87.7	87.4	89.3	88.4	88.4	90.2	89.6	89.7	91.4	88.1	89.0	90.2	89.12	0.01	40.7	40.8	40.3	40.6	244.64	245.75	20:40:12
87.7	87.4	89.3	88.4	88.4	90.2	89.6	89.7	91.4	88.1	89.0	90.2	89.12	0.01	40.7	40.8	40.3	40.6	245.44	246.52	20:41:12
87.7	87.4	89.3	88.4	88.4	90.2	89.6	89.7	91.4	88.1	89.0	90.2	89.11	0.01	40.7	40.8	40.3	40.6	244.72	245.78	20:42:12
87.7	87.4	89.3	88.4	88.4	90.2	89.6	89.7	91.4	88.1	89.0	90.2	89.10	0.01	40.7	40.7	40.4	40.6	245.20	246.28	20:43:12
87.7	87.4	89.3	88.4	88.4	90.2	89.6	89.7	91.4	88.2	89.0	90.2	89.13	0.01	40.7	40.7	40.3	40.6	244.96	245.97	20:44:12
87.7	87.4	89.3	88.4	88.4	90.2	89.6	89.7	91.4	88.2	89.0	90.2	89.13	0.01	40.7	40.7	40.3	40.6	245.52	246.49	20:45:12
87.7	87.4	89.3	88.4	88.4	90.2	89.6	89.7	91.4	88.1	89.0	90.2	89.10	0.01	40.7	40.7	40.3	40.6	245.68	246.74	20:46:12
87.7	87.4	89.3	88.4	88.4	90.2	89.6	89.7	91.4	88.1	89.0	90.2	89.12	0.01	40.7	40.7	40.3	40.6	245.84	246.87	20:47:12
87.7	87.4	89.3	88.4	88.4	90.2	89.6	89.7	91.4	88.2	89.0	90.2	89.12	0.01	40.8	40.7	40.4	40.6	244.24	245.31	20:48:12
87.7	87.4	89.3	88.4	88.4	90.2	89.6	89.7	91.4	88.2	89.0	90.2	89.13	0.01	40.7	40.7	40.3	40.6	245.12	246.13	20:49:12
87.7	87.4	89.3	88.4	88.4	90.2	89.6	89.7	91.4	88.1	89.0	90.2	89.11	0.00	40.7	40.8	40.3	40.6	244.56	245.60	20:50:12
87.7	87.4	89.3	88.4	88.4	90.2	89.6	89.7	91.4	88.2	89.0	90.2	89.14	0.01	40.7	40.7	40.3	40.6	245.04	245.99	20:51:12
87.7	87.4	89.3	88.4	88.4	90.2	89.6	89.7	91.4	88.2	89.0	90.2	89.13	0.01	40.7	40.7	40.3	40.6	244.72	245.69	20:52:12
87.7	87.4	89.3	88.4	88.4	90.2	89.6	89.7	91.4	88.2	89.0	90.2	89.12	0.00	40.7	40.7	40.3	40.6	245.60	246.63	20:53:12
87.7	87.4	89.3	88.4	88.4	90.2	89.6	89.7	91.4	88.2	89.0	90.2	89.12	0.00	40.7	40.7	40.3	40.5	244.88	245.81	20:54:12
87.7	87.4	89.3	88.4	88.4	90.2	89.6	89.7	91.4	88.2	89.0	90.2	89.13	0.01	40.7	40.7	40.3	40.5	245.28	246.21	20:55:12
87.7	87.4	89.3	88.4	88.4	90.2	89.6	89.7	91.4	88.2	89.0	90.2	89.13	0.01	40.7	40.7	40.3	40.6	244.72	245.71	20:56:12
87.8	87.4	89.3	88.4	88.4	90.2	89.6	89.7	91.4	88.2	89.0	90.2	89.14	0.01	40.7	40.6	40.3	40.5	245.20	246.12	20:57:12
87.8	87.5	89.3	88.4	88.4	90.2	89.6	89.7	91.4	88.2	89.0	90.3	89.16	0.02	40.7	40.7	40.3	40.6	245.20	246.14	20:58:12
87.7	87.4	89.3	88.4	88.4	90.2	89.6	89.7	91.4	88.2	89.0	90.2	89.13	0.02	40.7	40.7	40.3	40.6	245.68	246.65	20:59:12
87.8	87.5	89.3	88.4	88.4	90.2	89.6	89.7	91.4	88.2	89.0	90.3	89.15	0.02	40.7	40.7	40.3	40.6	245.12	246.09	21:00:12
87.7	87.5	89.3	88.4	88.4	90.2	89.6	89.7	91.4	88.2	89.0	90.3	89.15	0.02	40.7	40.8	40.3	40.6	245.84	246.84	21:01:12
87.7	87.4	89.3	88.4	88.4	90.2	89.6	89.7	91.4	88.2	89.0	90.2	89.13	0.02	40.7	40.7	40.3	40.6	244.88	245.85	21:02:12
87.7	87.4	89.3	88.4	88.4	90.2	89.6	89.7	91.4	88.2	89.0	90.2	89.13	0.02	40.7	40.7	40.4	40.6	245.36	246.45	21:03:12
87.7	87.4	89.3	88.4	88.4	90.2	89.6	89.7	91.4	88.1	89.0	90.2	89.12	0.02	40.7	40.7	40.3	40.6	245.04	246.06	21:04:12
87.7	87.5	89.3	88.4	88.4	90.2	89.6	89.7	91.4	88.2	89.0	90.2	89.14	0.02	40.7	40.7	40.3	40.6	244.88	245.84	21:05:12
87.7	87.5	89.3	88.4	88.4	90.2	89.6	89.7	91.4	88.2	89.0	90.2	89.14	0.02	40.7	40.6	40.3	40.6	244.96	245.90	21:06:12
87.7	87.4	89.3	88.4	88.4	90.2	89.6	89.7	91.4	88.2	89.0	90.2	89.14	0.02	40.7	40.7	40.3	40.6	245.04	245.94	21:07:12
87.7	87.4	89.3	88.4	88.4	90.2	89.6	89.7	91.4	88.1	89.0	90.2	89.11	0.02	40.8	40.8	40.3	40.6	244.40	245.55	21:08:12

COMMENTS _____

22 feet 3-22-93

Tested By Frank A. Downey Date 3-23-93 Reviewed By C L Hutlodge Date 3-22-93

AMPACITY TEST. JOB NUMBER 93-0501. SAMPLE NUMBER 93-0501-01 DATA FILE ITEM01NO.003 03-21-1993 E-3

POSITION 1			POSITION 2			POSITION 3			POSITION AVERAGE			AVE		AMBIENT TEMPERATURE				AMPS		
Trd1	Tbk1	Twh1	Trd2	Tbk2	Twh2	Trd3	Tbk3	Twh3	Tav1	Tav2	Tav3	Tvave	SLOPE	Tam1	Tam2	Tam3	Taav	It	I'	TIME
87.7	87.4	89.3	88.4	88.4	90.2	89.6	89.7	91.4	88.1	89.0	90.2	89.12	0.01	40.7	40.7	40.3	40.6	245.28	246.30	21:09:12
87.7	87.4	89.3	88.4	88.4	90.2	89.6	89.7	91.4	88.1	89.0	90.2	89.11	0.01	40.7	40.7	40.3	40.6	244.88	245.88	21:10:12
87.7	87.4	89.3	88.4	88.4	90.2	89.6	89.7	91.4	88.2	89.0	90.2	89.13	0.01	40.7	40.7	40.3	40.5	245.76	246.65	21:11:12
87.7	87.4	89.3	88.4	88.4	90.2	89.6	89.7	91.4	88.2	89.0	90.2	89.13	0.01	40.7	40.6	40.3	40.5	245.36	246.28	21:12:12
87.7	87.4	89.3	88.4	88.4	90.2	89.6	89.7	91.4	88.2	89.0	90.2	89.13	0.01	40.7	40.7	40.3	40.6	246.00	247.02	21:13:12
87.7	87.5	89.3	88.4	88.4	90.2	89.6	89.7	91.4	88.2	89.0	90.2	89.14	0.01	40.7	40.7	40.4	40.6	245.52	246.54	21:14:12
87.7	87.4	89.3	88.4	88.4	90.2	89.6	89.7	91.4	88.2	89.0	90.2	89.12	0.01	40.7	40.7	40.3	40.6	245.76	246.76	21:15:12
87.7	87.4	89.3	88.4	88.4	90.2	89.6	89.7	91.4	88.2	89.0	90.3	89.14	0.01	40.7	40.7	40.3	40.6	245.12	246.04	21:16:12
87.7	87.5	89.3	88.4	88.4	90.2	89.6	89.7	91.4	88.2	89.0	90.3	89.14	0.01	40.7	40.7	40.3	40.6	246.00	246.93	21:17:12
87.8	87.5	89.3	88.4	88.4	90.2	89.6	89.7	91.4	88.2	89.0	90.2	89.14	0.01	40.7	40.6	40.3	40.5	245.52	246.39	21:18:12
87.7	87.4	89.3	88.4	88.4	90.2	89.6	89.7	91.4	88.2	89.0	90.2	89.12	0.01	40.7	40.7	40.3	40.6	245.84	246.75	21:19:12
87.7	87.4	89.3	88.4	88.4	90.2	89.6	89.7	91.4	88.2	89.0	90.2	89.13	0.01	40.7	40.7	40.3	40.6	245.36	246.34	21:20:12
87.7	87.4	89.3	88.4	88.4	90.2	89.6	89.7	91.4	88.2	89.0	90.2	89.12	0.01	40.7	40.7	40.3	40.6	245.60	246.62	21:21:12
87.7	87.5	89.3	88.4	88.4	90.2	89.6	89.7	91.4	88.2	89.0	90.2	89.15	0.01	40.7	40.7	40.3	40.6	244.88	245.80	21:22:12
87.7	87.5	89.3	88.4	88.4	90.2	89.6	89.7	91.4	88.2	89.0	90.3	89.14	0.01	40.7	40.7	40.3	40.5	245.04	245.92	21:23:12
87.8	87.5	89.3	88.4	88.4	90.2	89.6	89.7	91.4	88.2	89.0	90.2	89.14	0.01	40.8	40.7	40.3	40.6	244.64	245.66	21:24:12
87.8	87.4	89.3	88.4	88.4	90.2	89.6	89.7	91.4	88.2	89.0	90.2	89.14	0.02	40.7	40.8	40.3	40.6	245.44	246.49	21:25:12
87.8	87.5	89.3	88.4	88.4	90.2	89.6	89.7	91.4	88.2	89.0	90.3	89.16	0.02	40.7	40.7	40.3	40.6	244.96	245.91	21:26:12
87.8	87.5	89.3	88.4	88.4	90.2	89.6	89.7	91.4	88.2	89.0	90.3	89.15	0.02	40.7	40.7	40.3	40.6	245.84	246.86	21:27:12
87.8	87.5	89.3	88.4	88.4	90.2	89.6	89.7	91.4	88.2	89.0	90.3	89.15	0.02	40.7	40.7	40.3	40.6	245.20	246.15	21:28:12
87.7	87.5	89.3	88.4	88.4	90.2	89.6	89.7	91.4	88.2	89.0	90.3	89.15	0.03	40.7	40.7	40.3	40.6	245.36	246.33	21:29:12
87.8	87.5	89.3	88.4	88.4	90.2	89.6	89.7	91.4	88.2	89.0	90.3	89.15	0.03	40.7	40.7	40.3	40.6	245.60	246.60	21:30:12
87.8	87.5	89.3	88.4	88.4	90.2	89.6	89.7	91.4	88.2	89.0	90.3	89.16	0.03	40.7	40.7	40.3	40.6	245.68	246.64	21:31:12
87.8	87.5	89.3	88.4	88.4	90.2	89.6	89.8	91.4	88.2	89.0	90.3	89.16	0.03	40.8	40.7	40.3	40.6	245.04	246.01	21:32:12
87.8	87.5	89.3	88.4	88.4	90.2	89.6	89.7	91.4	88.2	89.0	90.3	89.15	0.03	40.6	40.7	40.3	40.5	245.76	246.63	21:33:12
87.8	87.5	89.3	88.4	88.4	90.2	89.6	89.7	91.4	88.2	89.0	90.3	89.15	0.04	40.7	40.7	40.3	40.5	245.36	246.25	21:34:12
87.8	87.5	89.3	88.4	88.4	90.2	89.6	89.7	91.4	88.2	89.0	90.3	89.15	0.04	40.7	40.6	40.3	40.6	245.52	246.44	21:35:12
87.7	87.5	89.3	88.4	88.4	90.2	89.6	89.7	91.4	88.2	89.0	90.3	89.15	0.04	40.7	40.6	40.3	40.5	245.04	245.91	21:36:12
87.8	87.5	89.3	88.4	88.4	90.2	89.6	89.7	91.4	88.2	89.0	90.3	89.15	0.04	40.7	40.6	40.3	40.5	244.80	245.62	21:37:12
87.8	87.5	89.3	88.4	88.4	90.2	89.6	89.7	91.4	88.2	89.0	90.3	89.15	0.04	40.7	40.7	40.3	40.6	244.08	245.01	21:38:12
87.8	87.5	89.3	88.4	88.4	90.2	89.6	89.8	91.4	88.2	89.0	90.3	89.16	0.04	40.7	40.6	40.3	40.5	244.80	245.65	21:39:12
87.8	87.5	89.3	88.4	88.4	90.2	89.6	89.7	91.4	88.2	89.0	90.3	89.16	0.04	40.7	40.6	40.3	40.5	245.12	245.99	21:40:12
87.7	87.5	89.3	88.4	88.4	90.2	89.6	89.7	91.4	88.2	89.0	90.3	89.15	0.04	40.7	40.7	40.3	40.6	245.84	246.78	21:41:12
87.7	87.5	89.3	88.4	88.4	90.2	89.6	89.7	91.4	88.2	89.0	90.3	89.15	0.03	40.7	40.7	40.3	40.6	244.88	245.81	21:42:12
87.7	87.5	89.3	88.4	88.4	90.2	89.6	89.7	91.4	88.2	89.0	90.3	89.15	0.03	40.7	40.6	40.3	40.5	245.52	246.36	21:43:12
87.7	87.5	89.3	88.4	88.4	90.2	89.6	89.7	91.4	88.2	89.0	90.3	89.15	0.03	40.7	40.6	40.3	40.5	245.20	246.12	21:44:12
87.8	87.5	89.3	88.4	88.4	90.3	89.6	89.8	91.4	88.2	89.0	90.3	89.16	0.03	40.7	40.7	40.3	40.5	246.00	246.84	21:45:12
87.8	87.5	89.3	88.4	88.4	90.2	89.6	89.8	91.4	88.2	89.0	90.3	89.16	0.03	40.7	40.7	40.3	40.5	246.00	246.88	21:46:12
87.8	87.5	89.3	88.4	88.4	90.2	89.6	89.7	91.4	88.2	89.0	90.3	89.15	0.03	40.6	40.7	40.3	40.5	246.16	247.03	21:47:12
87.8	87.4	89.3	88.4	88.4	90.2	89.6	89.7	91.4	88.2	89.0	90.2	89.14	0.03	40.6	40.7	40.3	40.5	245.52	246.41	21:48:12
87.7	87.4	89.3	88.4	88.4	90.2	89.6	89.7	91.4	88.2	89.0	90.2	89.14	0.03	40.7	40.7	40.3	40.5	245.36	246.25	21:49:12
87.8	87.5	89.3	88.4	88.4	90.2	89.6	89.7	91.4	88.2	89.0	90.3	89.15	0.03	40.7	40.7	40.3	40.6	245.36	246.28	21:50:12
87.8	87.5	89.3	88.5	88.5	90.3	89.7	89.8	91.4	88.2	89.1	90.3	89.19	0.03	40.7	40.7	40.3	40.5	246.32	247.10	21:51:12
87.8	87.5	89.4	88.4	88.4	90.3	89.7	89.8	91.4	88.2	89.0	90.3	89.18	0.03	40.7	40.7	40.3	40.6	245.68	246.56	21:52:12
87.8	87.5	89.3	88.4	88.4	90.3	89.6	89.8	91.4	88.2	89.0	90.3	89.18	0.03	40.7	40.7	40.3	40.5	245.84	246.66	21:53:12
87.8	87.5	89.3	88.4	88.4	90.3	89.6	89.8	91.4	88.2	89.0	90.3	89.17	0.04	40.7	40.7	40.3	40.5	245.12	245.93	21:54:12
87.8	87.5	89.3	88.4	88.4	90.2	89.6	89.8	91.4	88.2	89.0	90.3	89.17	0.04	40.7	40.7	40.3	40.5	245.92	246.77	21:55:12
87.8	87.5	89.3	88.4	88.5	90.3	89.6	89.8	91.4	88.2	89.1	90.3	89.18	0.04	40.7	40.6	40.3	40.5	245.44	246.22	21:56:12
87.8	87.5	89.3	88.4	88.4	90.2	89.6	89.7	91.4	88.2	89.0	90.3	89.17	0.04	40.7	40.6	40.3	40.5	246.48	247.34	21:57:12
87.8	87.5	89.4	88.5	88.4	90.3	89.7	89.8	91.4	88.2	89.1	90.3	89.19	0.04	40.7	40.6	40.3	40.5	245.60	246.36	21:58:12
87.8	87.5	89.3	88.4	88.4	90.2	89.7	89.8	91.4	88.2	89.0	90.3	89.17	0.05	40.6	40.7	40.3	40.5	245.68	246.48	21:59:12
87.8	87.5	89.3	88.4	88.5	90.3	89.7	89.8	91.4	88.2	89.1	90.3	89.18	0.05	40.6	40.6	40.3	40.5	245.04	245.77	22:00:12
87.8	87.5	89.3	88.5	88.4	90.3	89.7	89.8	91.4	88.2	89.1	90.3	89.19	0.05	40.7	40.6	40.3	40.5	245.52	246.22	22:01:12
87.8	87.5	89.4	88.5	88.5	90.3	89.7	89.8	91.4	88.2	89.1	90.3	89.19	0.06	40.7	40.6	40.3	40.5	244.80	245.57	22:02:12
87.8	87.5	89.4	88.5	88.5	90.3	89.7	89.8	91.4	88.2	89.1	90.3	89.20	0.06	40.7	40.7	40.3	40.6	245.36	246.14	22:03:12
87.8	87.5	89.4	88.5	88.5	90.3	89.7	89.8	91.4	88.2	89.1	90.3	89.18	0.06	40.7	40.6	40.3	40.5	244.88	245.66	22:04:12
87.8	87.5	89.4	88.5	88.4	90.3	89.7	89.8	91.4	88.2	89.1	90.3	89.19	0.06	40.7	40.6	40.3	40.5	244.96	245.70	22:05:12
87.8	87.5	89.3	88.5	88.4	90.3	89.7	89.8	91.4	88.2	89.1	90.3	89.19	0.07	40.7	40.6	40.3	40.6	244.72	245.52	22:06:12
87.8	87.5	89.3	88.4	88.5	90.3	89.7	89.8	91.4	88.2	89.1	90.3	89.19	0.07	40.6	40.6	40.3	40.5	245.04	245.82	22:07:12
87.8	87.5	89.3	88.4	88.4	90.2	89.6	89.8	91.4	88.2	89.0	90.3	89.16	0.06	40.7	40.7	40.3	40.6	244.56	245.51	22:08:12

COMMENTS ______________________________

Tested By *[signature]* Date 3-22-93 Reviewed By *C L Rutledge [signature]* Date 3-22-93

POSITION 1			POSITION 2			POSITION 3			POSITION AVERAGE			AVE		AMBIENT TEMPERATURE				AMPS		
Trd1	Tbk1	Twh1	Trd2	Tbk2	Twh2	Trd3	Tbk3	Twh3	Tav1	Tav2	Tav3	Twave	SLOPE	Tam1	Tam2	Tam3	Taav	It	I'	TIME
87.9	87.2	89.2	89.0	88.5	90.2	89.2	89.0	90.6	88.1	89.2	89.6	88.97	0.05	39.5	39.7	39.3	39.5	231.60	230.02	02:28:09
87.8	87.2	89.2	89.0	88.5	90.2	89.3	89.0	90.6	88.1	89.2	89.6	88.98	0.05	39.4	39.6	39.4	39.5	231.36	229.71	02:29:09
87.8	87.2	89.2	89.0	88.5	90.2	89.2	89.0	90.6	88.1	89.2	89.6	88.97	0.05	39.4	39.6	39.3	39.5	231.36	229.70	02:30:09
87.9	87.2	89.2	89.0	88.5	90.2	89.3	89.0	90.6	88.1	89.2	89.6	88.98	0.05	39.4	39.6	39.3	39.4	231.52	229.75	02:31:09
87.9	87.2	89.2	89.0	88.5	90.2	89.2	89.0	90.6	88.1	89.2	89.6	88.98	0.05	39.4	39.6	39.3	39.4	231.44	229.67	02:32:09
87.9	87.2	89.2	89.0	88.5	90.2	89.2	89.0	90.6	88.1	89.2	89.6	88.97	0.05	39.4	39.6	39.3	39.5	231.20	229.52	02:33:09
87.9	87.2	89.2	89.0	88.5	90.2	89.2	89.0	90.6	88.1	89.2	89.6	88.97	0.05	39.5	39.7	39.3	39.5	231.44	229.88	02:34:09
87.9	87.2	89.2	89.0	88.5	90.3	89.3	89.0	90.6	88.1	89.3	89.6	88.98	0.05	39.5	39.7	39.4	39.5	231.68	230.08	02:35:09
87.9	87.2	89.2	89.0	88.5	90.3	89.3	89.0	90.6	88.1	89.3	89.6	89.00	0.05	39.5	39.7	39.3	39.5	231.36	229.73	02:36:09
87.9	87.2	89.2	89.0	88.5	90.3	89.3	89.0	90.6	88.1	89.3	89.6	88.98	0.05	39.5	39.6	39.3	39.5	231.04	229.32	02:37:09
87.9	87.2	89.2	89.0	88.5	90.2	89.2	89.0	90.6	88.1	89.2	89.6	88.98	0.05	39.5	39.6	39.3	39.5	230.16	228.50	02:38:09
87.9	87.2	89.2	89.0	88.5	90.3	89.3	89.0	90.6	88.1	89.3	89.6	89.00	0.05	39.5	39.6	39.3	39.5	231.04	229.34	02:39:09
87.9	87.2	89.2	89.0	88.5	90.3	89.3	89.0	90.6	88.1	89.3	89.6	89.00	0.05	39.5	39.6	39.3	39.5	230.40	228.75	02:40:09
87.9	87.2	89.2	89.0	88.5	90.2	89.2	89.0	90.6	88.1	89.2	89.6	88.98	0.06	39.5	39.7	39.4	39.5	230.40	228.88	02:41:09
87.9	87.2	89.2	89.0	88.5	90.2	89.2	89.0	90.6	88.1	89.3	89.6	88.99	0.06	39.5	39.7	39.3	39.5	230.56	228.99	02:42:09
87.9	87.2	89.2	89.0	88.5	90.3	89.3	89.0	90.6	88.1	89.3	89.6	88.99	0.06	39.5	39.7	39.3	39.5	230.72	229.10	02:43:09
87.9	87.2	89.2	89.0	88.5	90.2	89.2	89.0	90.6	88.1	89.2	89.6	88.98	0.05	39.4	39.7	39.3	39.5	231.04	229.34	02:44:09
87.8	87.2	89.2	89.0	88.5	90.2	89.3	89.0	90.6	88.1	89.3	89.6	88.99	0.05	39.3	39.7	39.3	39.4	231.20	229.46	02:45:09
87.9	87.2	89.2	89.0	88.5	90.2	89.3	89.0	90.6	88.1	89.2	89.6	88.98	0.05	39.4	39.8	39.3	39.5	231.04	229.40	02:46:09
87.9	87.2	89.2	89.0	88.5	90.2	89.3	89.0	90.6	88.1	89.2	89.6	88.98	0.05	39.4	39.7	39.3	39.5	231.36	229.72	02:47:09
87.9	87.2	89.2	89.0	88.5	90.2	89.2	89.0	90.6	88.1	89.3	89.6	88.99	0.05	39.5	39.7	39.3	39.5	230.72	229.07	02:48:09
87.9	87.2	89.2	89.0	88.5	90.3	89.3	89.0	90.6	88.1	89.3	89.6	89.00	0.05	39.4	39.7	39.3	39.5	230.88	229.18	02:49:09
87.9	87.2	89.2	89.0	88.5	90.3	89.3	89.0	90.6	88.1	89.3	89.6	88.99	0.05	39.4	39.6	39.3	39.5	231.04	229.30	02:50:09
87.9	87.2	89.2	89.0	88.5	90.3	89.3	89.0	90.6	88.1	89.3	89.6	88.99	0.05	39.4	39.6	39.4	39.5	230.80	229.06	02:51:09
87.9	87.2	89.2	89.0	88.5	90.3	89.3	89.0	90.6	88.1	89.3	89.6	88.99	0.05	39.5	39.6	39.3	39.5	230.96	229.28	02:52:09
87.9	87.2	89.2	89.0	88.5	90.3	89.3	89.0	90.6	88.1	89.3	89.6	89.00	0.05	39.4	39.6	39.3	39.4	231.84	230.05	02:53:09
87.9	87.2	89.2	89.0	88.5	90.3	89.3	89.0	90.6	88.1	89.3	89.6	89.00	0.05	39.4	39.6	39.3	39.4	231.84	230.07	02:54:09
87.9	87.2	89.2	89.0	88.5	90.3	89.3	89.0	90.6	88.1	89.3	89.6	88.99	0.05	39.4	39.7	39.3	39.5	231.52	229.81	02:55:09
87.8	87.2	89.2	89.0	88.5	90.3	89.3	89.0	90.6	88.1	89.3	89.6	88.99	0.05	39.4	39.7	39.3	39.4	231.28	229.52	02:56:09
87.9	87.2	89.2	89.0	88.5	90.3	89.3	89.0	90.6	88.1	89.3	89.6	88.99	0.05	39.4	39.6	39.3	39.4	231.36	229.57	02:57:09
87.9	87.3	89.2	89.0	88.5	90.3	89.3	89.0	90.6	88.1	89.3	89.6	89.01	0.05	39.4	39.7	39.3	39.5	231.68	229.97	02:58:09
87.9	87.3	89.2	89.0	88.5	90.3	89.3	89.0	90.6	88.1	89.3	89.6	89.01	0.05	39.5	39.7	39.3	39.5	231.68	229.99	02:59:09
87.9	87.3	89.2	89.0	88.5	90.3	89.3	89.0	90.6	88.1	89.3	89.6	89.01	0.06	39.5	39.7	39.3	39.5	231.36	229.66	03:00:09
87.9	87.3	89.2	89.0	88.5	90.3	89.3	89.0	90.6	88.1	89.3	89.6	89.01	0.06	39.5	39.7	39.3	39.5	231.52	229.90	03:01:09
87.9	87.3	89.2	89.0	88.5	90.3	89.3	89.0	90.6	88.1	89.3	89.7	89.02	0.06	39.5	39.7	39.3	39.5	231.28	229.53	03:02:09
87.9	87.3	89.2	89.0	88.5	90.3	89.3	89.0	90.6	88.1	89.3	89.6	89.00	0.06	39.4	39.7	39.3	39.5	230.88	229.17	03:03:09
87.9	87.3	89.2	89.0	88.5	90.2	89.3	89.0	90.6	88.1	89.3	89.6	89.00	0.06	39.5	39.7	39.3	39.5	230.40	228.75	03:04:09
87.9	87.3	89.2	89.0	88.5	90.3	89.3	89.0	90.6	88.1	89.3	89.6	89.01	0.06	39.4	39.7	39.3	39.5	229.76	228.06	03:05:09
87.9	87.3	89.2	89.0	88.5	90.3	89.3	89.0	90.6	88.1	89.3	89.6	89.01	0.06	39.4	39.7	39.3	39.5	230.24	228.50	03:06:09
87.9	87.3	89.2	89.0	88.5	90.3	89.3	89.0	90.6	88.1	89.3	89.6	89.02	0.06	39.4	39.6	39.3	39.5	229.60	227.85	03:07:09
87.9	87.3	89.2	89.1	88.5	90.3	89.3	89.0	90.6	88.1	89.3	89.6	89.02	0.07	39.4	39.6	39.3	39.4	230.24	228.44	03:08:09
87.9	87.3	89.2	89.1	88.5	90.3	89.3	89.0	90.6	88.1	89.3	89.6	89.02	0.07	39.4	39.6	39.3	39.4	230.80	228.98	03:09:09
87.9	87.3	89.2	89.0	88.5	90.3	89.3	89.0	90.6	88.1	89.3	89.6	89.02	0.07	39.4	39.6	39.3	39.4	231.20	229.36	03:10:09
87.9	87.3	89.2	89.0	88.5	90.3	89.3	89.0	90.6	88.1	89.3	89.6	89.01	0.07	39.4	39.6	39.3	39.4	231.04	229.28	03:11:09
87.9	87.3	89.2	89.1	88.6	90.3	89.3	89.0	90.6	88.2	89.3	89.7	89.04	0.07	39.5	39.6	39.3	39.5	230.80	229.03	03:12:09
87.9	87.3	89.2	89.0	88.5	90.3	89.3	89.0	90.6	88.1	89.3	89.7	89.02	0.07	39.4	39.5	39.3	39.4	229.92	228.03	03:13:09
87.9	87.3	89.2	89.1	88.6	90.3	89.3	89.0	90.6	88.1	89.3	89.7	89.04	0.07	39.4	39.6	39.3	39.4	230.56	228.72	03:14:09
87.9	87.3	89.2	89.1	88.5	90.3	89.3	89.0	90.6	88.1	89.3	89.7	89.02	0.07	39.4	39.6	39.3	39.4	229.84	227.99	03:15:09
87.9	87.3	89.2	89.1	88.5	90.3	89.3	89.0	90.6	88.1	89.3	89.6	89.02	0.07	39.5	39.7	39.3	39.5	230.40	228.69	03:16:09
87.9	87.3	89.2	89.0	88.5	90.3	89.3	89.0	90.6	88.1	89.3	89.6	89.02	0.07	39.4	39.6	39.3	39.5	230.08	228.32	03:17:09
87.9	87.3	89.2	89.1	88.5	90.3	89.3	89.0	90.6	88.1	89.3	89.6	89.02	0.07	39.4	39.7	39.3	39.4	230.56	228.76	03:18:09
87.9	87.3	89.2	89.1	88.5	90.3	89.3	89.0	90.7	88.1	89.3	89.7	89.03	0.07	39.4	39.6	39.3	39.4	231.36	229.52	03:19:09
87.9	87.3	89.2	89.1	88.5	90.3	89.3	89.1	90.6	88.1	89.3	89.7	89.04	0.07	39.5	39.6	39.3	39.5	231.04	229.24	03:20:09
87.9	87.3	89.2	89.0	88.5	90.3	89.3	89.0	90.6	88.1	89.3	89.6	89.02	0.07	39.4	39.7	39.3	39.4	231.28	229.51	03:21:09
87.9	87.3	89.2	89.1	88.6	90.3	89.3	89.0	90.7	88.2	89.3	89.7	89.04	0.07	39.4	39.6	39.3	39.4	231.20	229.32	03:22:09
87.9	87.3	89.2	89.0	88.5	90.3	89.3	89.0	90.6	88.1	89.3	89.6	89.01	0.06	39.5	39.7	39.3	39.5	230.96	229.30	03:23:09
87.9	87.3	89.2	89.1	88.5	90.3	89.3	89.0	90.6	88.1	89.3	89.6	89.02	0.06	39.4	39.5	39.3	39.4	231.12	229.28	03:24:09
87.9	87.3	89.2	89.1	88.5	90.3	89.3	89.0	90.6	88.1	89.3	89.7	89.03	0.06	39.5	39.7	39.3	39.5	231.20	229.47	03:25:09
87.9	87.3	89.2	89.1	88.5	90.3	89.3	89.0	90.6	88.1	89.3	89.6	89.02	0.06	39.5	39.7	39.3	39.5	231.04	229.33	03:26:09
87.9	87.3	89.2	89.1	88.5	90.3	89.3	89.0	90.6	88.1	89.3	89.6	89.02	0.06	39.5	39.6	39.3	39.5	231.04	229.29	03:27:09

COMMENTS _____

Tested By Frank A. Deiney Date 3-24-93 Reviewed By C. L. Rutledge Date 3-24-93

POSITION 1			POSITION 2			POSITION 3			POSITION AVERAGE			AVE		AMBIENT TEMPERATURE				AMPS		
Trd1	Tbk1	Twh1	Trd2	Tbk2	Twh2	Trd3	Tbk3	Twh3	Tav1	Tav2	Tav3	Twave	SLOPE	Tam1	Tam2	Tam3	Taav	It	I'	TIME
87.9	87.3	89.2	89.1	88.5	90.3	89.3	89.0	90.6	88.1	89.3	89.6	89.03	0.06	39.4	39.7	39.3	39.5	231.04	229.27	03:28:09
87.9	87.3	89.2	89.1	88.5	90.3	89.3	89.0	90.6	88.1	89.3	89.7	89.03	0.06	39.4	39.6	39.3	39.4	228.08	226.30	03:29:09
87.9	87.3	89.2	89.1	88.5	90.3	89.3	89.0	90.6	88.1	89.3	89.6	89.02	0.06	39.4	39.7	39.3	39.5	230.72	228.95	03:30:09
87.9	87.3	89.2	89.1	88.5	90.3	89.3	89.0	90.6	88.1	89.3	89.6	89.02	0.05	39.4	39.7	39.3	39.5	231.04	229.32	03:31:09
87.9	87.3	89.2	89.0	88.5	90.3	89.3	89.0	90.6	88.1	89.3	89.6	89.02	0.05	39.5	39.7	39.3	39.5	231.20	229.48	03:32:09
87.9	87.3	89.2	89.0	88.5	90.3	89.3	89.0	90.6	88.1	89.3	89.6	89.01	0.05	39.5	39.7	39.3	39.5	230.80	229.06	03:33:09
87.9	87.3	89.2	89.0	88.5	90.3	89.3	89.0	90.6	88.1	89.3	89.6	89.02	0.05	39.5	39.6	39.3	39.4	230.72	228.94	03:34:09
87.9	87.3	89.2	89.1	88.5	90.3	89.3	89.0	90.6	88.1	89.3	89.6	89.02	0.05	39.5	39.6	39.3	39.5	231.28	229.49	03:35:09
87.9	87.3	89.2	89.1	88.5	90.3	89.3	89.0	90.6	88.1	89.3	89.6	89.02	0.05	39.4	39.5	39.3	39.4	230.56	228.65	03:36:09
87.9	87.3	89.2	89.1	88.5	90.3	89.3	89.1	90.6	88.1	89.3	89.7	89.03	0.05	39.4	39.6	39.3	39.4	230.80	228.94	03:37:09
87.9	87.3	89.2	89.1	88.5	90.3	89.3	89.0	90.6	88.1	89.3	89.6	89.02	0.04	39.4	39.7	39.3	39.5	230.56	228.82	03:38:09
87.9	87.3	89.2	89.1	88.5	90.3	89.3	89.0	90.6	88.1	89.3	89.7	89.02	0.04	39.4	39.6	39.3	39.4	231.36	229.54	03:39:09
87.9	87.3	89.2	89.1	88.6	90.3	89.3	89.0	90.7	88.1	89.3	89.7	89.04	0.05	39.4	39.7	39.3	39.5	231.28	229.46	03:40:09
87.9	87.3	89.2	89.1	88.6	90.3	89.3	89.0	90.7	88.1	89.3	89.7	89.03	0.05	39.4	39.7	39.3	39.5	230.56	228.78	03:41:09
87.9	87.3	89.3	89.1	88.6	90.3	89.3	89.0	90.7	88.2	89.3	89.7	89.04	0.05	39.5	39.6	39.3	39.4	230.40	228.56	03:42:09
87.9	87.3	89.3	89.1	88.5	90.3	89.3	89.1	90.7	88.2	89.3	89.7	89.04	0.05	39.4	39.6	39.3	39.4	230.88	229.03	03:43:09
87.9	87.3	89.2	89.0	88.5	90.3	89.3	89.0	90.6	88.1	89.3	89.6	89.02	0.04	39.4	39.6	39.3	39.4	230.88	228.97	03:44:09
87.9	87.3	89.2	89.1	88.5	90.3	89.3	89.0	90.7	88.1	89.3	89.7	89.02	0.04	39.4	39.6	39.3	39.4	230.88	229.04	03:45:09
87.9	87.2	89.2	89.1	88.5	90.3	89.3	89.0	90.6	88.1	89.3	89.6	89.01	0.04	39.5	39.6	39.3	39.5	230.88	229.15	03:46:09
87.9	87.3	89.2	89.1	88.6	90.3	89.3	89.0	90.7	88.1	89.3	89.7	89.03	0.04	39.5	39.6	39.3	39.5	231.52	229.75	03:47:09
87.9	87.3	89.2	89.0	88.5	90.3	89.3	89.0	90.7	88.1	89.3	89.7	89.03	0.03	39.5	39.7	39.3	39.5	231.28	229.57	03:48:09
87.9	87.3	89.2	89.1	88.5	90.3	89.3	89.0	90.6	88.1	89.3	89.6	89.01	0.03	39.4	39.7	39.3	39.5	230.72	229.03	03:49:09
87.9	87.3	89.3	89.1	88.5	90.3	89.3	89.1	90.6	88.1	89.3	89.7	89.03	0.03	39.5	39.6	39.3	39.5	230.96	229.20	03:50:09
87.9	87.3	89.2	89.1	88.6	90.3	89.3	89.0	90.7	88.2	89.3	89.7	89.04	0.03	39.5	39.7	39.3	39.5	231.36	229.63	03:51:10
87.9	87.3	89.2	89.1	88.5	90.3	89.3	89.0	90.6	88.1	89.3	89.7	89.03	0.03	39.5	39.7	39.3	39.5	231.44	229.77	03:52:09
87.9	87.3	89.2	89.1	88.5	90.3	89.3	89.0	90.7	88.1	89.3	89.7	89.03	0.03	39.4	39.6	39.3	39.5	231.52	229.72	03:53:09
87.9	87.3	89.3	89.1	88.6	90.3	89.3	89.1	90.7	88.2	89.3	89.7	89.04	0.03	39.5	39.6	39.3	39.5	230.16	228.34	03:54:09
87.9	87.3	89.3	89.1	88.6	90.3	89.3	89.1	90.7	88.2	89.3	89.7	89.05	0.03	39.4	39.6	39.3	39.4	229.68	227.81	03:55:09
87.9	87.3	89.3	89.1	88.6	90.3	89.3	89.1	90.7	88.2	89.3	89.7	89.04	0.03	39.5	39.6	39.3	39.5	230.00	228.25	03:56:09
87.9	87.3	89.3	89.1	88.5	90.3	89.3	89.1	90.6	88.2	89.3	89.7	89.04	0.03	39.5	39.6	39.3	39.5	230.40	228.62	03:57:09
87.9	87.3	89.3	89.1	88.6	90.3	89.3	89.1	90.7	88.2	89.3	89.7	89.05	0.03	39.5	39.6	39.3	39.5	230.88	229.12	03:58:09
87.9	87.3	89.3	89.1	88.6	90.3	89.3	89.1	90.7	88.2	89.3	89.7	89.05	0.03	39.4	39.5	39.3	39.4	230.24	228.32	03:59:09
87.9	87.3	89.3	89.1	88.6	90.3	89.3	89.1	90.7	88.2	89.3	89.7	89.05	0.03	39.4	39.6	39.3	39.4	231.04	229.13	04:00:09
87.9	87.3	89.3	89.1	88.6	90.3	89.3	89.1	90.7	88.2	89.3	89.7	89.05	0.03	39.4	39.6	39.3	39.4	231.04	229.17	04:01:09
87.9	87.3	89.3	89.1	88.6	90.3	89.3	89.1	90.7	88.2	89.3	89.7	89.05	0.03	39.4	39.5	39.3	39.4	230.72	228.78	04:02:09
87.9	87.3	89.3	89.1	88.6	90.3	89.3	89.1	90.7	88.2	89.3	89.7	89.05	0.03	39.3	39.6	39.3	39.4	229.84	227.89	04:03:09
87.9	87.3	89.3	89.1	88.6	90.3	89.3	89.1	90.7	88.2	89.3	89.7	89.05	0.03	39.4	39.7	39.3	39.5	230.72	228.88	04:04:10
87.9	87.3	89.3	89.1	88.6	90.3	89.3	89.1	90.7	88.2	89.3	89.7	89.05	0.03	39.4	39.6	39.3	39.4	231.04	229.14	04:05:09
87.9	87.3	89.3	89.1	88.6	90.3	89.3	89.1	90.7	88.2	89.3	89.7	89.06	0.03	39.4	39.7	39.3	39.4	231.28	229.40	04:06:09
87.9	87.3	89.3	89.1	88.6	90.3	89.3	89.1	90.7	88.1	89.3	89.7	89.04	0.03	39.4	39.6	39.3	39.4	230.08	228.27	04:07:10
87.9	87.3	89.3	89.1	88.6	90.3	89.3	89.1	90.7	88.2	89.3	89.7	89.05	0.03	39.4	39.6	39.3	39.4	229.92	228.02	04:08:09
87.9	87.3	89.3	89.1	88.6	90.3	89.3	89.1	90.7	88.2	89.3	89.7	89.05	0.03	39.4	39.7	39.3	39.5	228.80	226.99	04:09:10
87.9	87.3	89.3	89.1	88.6	90.3	89.3	89.1	90.7	88.2	89.3	89.7	89.05	0.03	39.5	39.6	39.3	39.5	229.84	228.04	04:10:09
87.9	87.3	89.3	89.1	88.6	90.3	89.3	89.1	90.7	88.2	89.3	89.7	89.05	0.03	39.5	39.5	39.3	39.4	229.28	227.43	04:11:09
87.9	87.3	89.2	89.0	88.5	90.3	89.3	89.0	90.6	88.1	89.3	89.6	89.02	0.03	39.5	39.6	39.3	39.5	229.52	227.78	04:12:10
87.9	87.3	89.3	89.1	88.6	90.3	89.3	89.0	90.7	88.2	89.3	89.7	89.04	0.03	39.6	39.6	39.3	39.5	229.12	227.37	04:13:09
87.9	87.3	89.2	89.1	88.5	90.3	89.3	89.0	90.7	88.1	89.3	89.7	89.03	0.03	39.5	39.6	39.3	39.4	229.84	228.03	04:14:10
87.9	87.3	89.2	89.0	88.5	90.3	89.3	89.0	90.6	88.1	89.3	89.6	89.02	0.03	39.5	39.7	39.3	39.5	230.24	228.47	04:15:09
87.9	87.3	89.2	89.1	88.5	90.3	89.3	89.0	90.7	88.1	89.3	89.7	89.03	0.03	39.5	39.7	39.3	39.5	231.12	229.36	04:16:09
87.9	87.3	89.2	89.1	88.5	90.3	89.3	89.0	90.7	88.1	89.3	89.7	89.03	0.02	39.5	39.7	39.3	39.5	230.72	229.01	04:17:10
87.9	87.3	89.3	89.1	88.6	90.3	89.3	89.1	90.7	88.2	89.3	89.7	89.05	0.02	39.5	39.6	39.3	39.5	231.20	229.39	04:18:09
87.9	87.3	89.2	89.1	88.5	90.3	89.3	89.1	90.6	88.1	89.3	89.7	89.03	0.02	39.5	39.6	39.3	39.5	231.36	229.58	04:19:09
87.9	87.3	89.3	89.1	88.5	90.3	89.3	89.0	90.7	88.1	89.3	89.7	89.03	0.02	39.5	39.6	39.3	39.4	231.04	229.20	04:20:10
87.9	87.3	89.2	89.0	88.5	90.3	89.3	89.0	90.6	88.1	89.3	89.6	89.01	0.02	39.4	39.6	39.3	39.4	230.72	228.90	04:21:09
87.9	87.3	89.2	89.0	88.5	90.3	89.3	89.0	90.6	88.1	89.3	89.7	89.02	0.02	39.4	39.6	39.3	39.4	230.56	228.74	04:22:10
87.9	87.3	89.2	89.0	88.5	90.3	89.3	89.0	90.7	88.1	89.3	89.7	89.03	0.02	39.4	39.7	39.2	39.4	230.24	228.34	04:23:09
87.9	87.3	89.2	89.0	88.5	90.3	89.3	89.0	90.7	88.1	89.3	89.7	89.02	0.01	39.3	39.6	39.2	39.4	230.00	228.06	04:24:09
87.9	87.3	89.2	89.0	88.5	90.3	89.3	89.0	90.7	88.1	89.3	89.7	89.03	0.01	39.3	39.5	39.3	39.4	229.28	227.29	04:25:10
87.9	87.3	89.2	89.0	88.5	90.3	89.3	89.0	90.7	88.1	89.3	89.7	89.02	0.01	39.4	39.5	39.2	39.4	230.00	228.05	04:26:09
87.9	87.3	89.2	89.0	88.5	90.3	89.3	89.1	90.7	88.1	89.3	89.7	89.03	0.01	39.5	39.5	39.3	39.4	230.48	228.64	04:27:10

COMMENTS _____

Tested By Frank A. Deiney Date 3-24-93 Reviewed By C.L. Rutledge Date 3-24-93

POSITION 1			POSITION 2			POSITION 3			POSITION AVERAGE			AVE		AMBIENT TEMPERATURE				AMPS		
Trd1	Tbk1	Twh1	Trd2	Tbk2	Twh2	Trd3	Tbk3	Twh3	Tav1	Tav2	Tav3	Twave	SLOPE	Tam1	Tam2	Tam3	Taav	It	I'	TIME
87.9	87.3	89.3	89.1	88.6	90.3	89.3	89.1	90.7	88.2	89.3	89.7	89.05	0.01	39.4	39.6	39.3	39.4	230.24	228.30	04:28:09
87.9	87.3	89.3	89.1	88.5	90.3	89.3	89.0	90.7	88.1	89.3	89.7	89.04	0.01	39.4	39.6	39.3	39.4	229.92	228.02	04:29:09
87.9	87.3	89.3	89.1	88.5	90.3	89.3	89.0	90.6	88.1	89.3	89.7	89.02	0.01	39.4	39.6	39.2	39.4	229.28	227.42	04:30:10
87.9	87.2	89.2	89.0	88.5	90.3	89.3	89.0	90.6	88.1	89.3	89.6	89.01	0.00	39.3	39.6	39.3	39.4	229.76	227.87	04:31:09
87.9	87.2	89.2	89.0	88.5	90.3	89.3	89.0	90.6	88.1	89.3	89.6	89.00	-0.00	39.4	39.5	39.2	39.4	229.92	227.98	04:32:10
87.9	87.3	89.2	89.0	88.5	90.3	89.3	89.0	90.6	88.1	89.3	89.6	89.01	-0.00	39.3	39.6	39.3	39.4	230.48	228.59	04:33:10
87.9	87.3	89.3	89.0	88.5	90.3	89.3	89.0	90.6	88.1	89.3	89.7	89.03	-0.01	39.4	39.6	39.2	39.4	230.40	228.47	04:34:09
87.9	87.3	89.3	89.1	88.5	90.3	89.3	89.1	90.7	88.1	89.3	89.7	89.03	-0.01	39.4	39.5	39.2	39.4	229.52	227.58	04:35:09
87.9	87.3	89.2	89.0	88.5	90.3	89.3	89.0	90.7	88.1	89.3	89.7	89.03	-0.01	39.3	39.6	39.2	39.4	229.28	227.34	04:36:09
87.9	87.3	89.3	89.1	88.5	90.3	89.3	89.0	90.7	88.1	89.3	89.7	89.03	-0.01	39.4	39.5	39.2	39.4	229.60	227.67	04:37:09
87.9	87.3	89.2	89.1	88.5	90.3	89.3	89.0	90.6	88.1	89.3	89.6	89.02	-0.01	39.4	39.6	39.3	39.4	229.44	227.62	04:38:10
87.9	87.3	89.3	89.1	88.5	90.3	89.3	89.0	90.7	88.2	89.3	89.7	89.04	-0.01	39.4	39.5	39.2	39.4	230.00	228.04	04:39:09
87.9	87.3	89.2	89.0	88.5	90.3	89.3	89.0	90.6	88.1	89.3	89.6	89.01	-0.02	39.3	39.5	39.2	39.4	230.08	228.05	04:40:10
87.9	87.2	89.3	89.1	88.5	90.3	89.3	89.0	90.6	88.1	89.3	89.6	89.02	-0.02	39.3	39.5	39.2	39.3	230.48	228.43	04:41:10
87.9	87.3	89.3	89.0	88.5	90.3	89.3	89.0	90.7	88.1	89.3	89.7	89.03	-0.02	39.3	39.5	39.3	39.4	229.92	227.94	04:42:09
87.9	87.3	89.2	89.0	88.5	90.3	89.3	89.0	90.6	88.1	89.3	89.6	89.02	-0.02	39.3	39.5	39.2	39.4	230.48	228.47	04:43:10
87.9	87.3	89.3	89.1	88.5	90.3	89.3	89.0	90.6	88.1	89.3	89.7	89.04	-0.02	39.3	39.5	39.2	39.3	230.56	228.49	04:44:10
87.9	87.3	89.2	89.1	88.5	90.3	89.3	89.0	90.6	88.1	89.3	89.6	89.02	-0.02	39.3	39.5	39.2	39.3	229.68	227.68	04:45:10
87.9	87.3	89.3	89.1	88.5	90.3	89.3	89.0	90.6	88.1	89.3	89.7	89.03	-0.02	39.3	39.5	39.2	39.4	230.24	228.20	04:46:10
87.9	87.3	89.2	89.0	88.5	90.3	89.3	89.0	90.7	88.1	89.3	89.7	89.02	-0.02	39.4	39.5	39.2	39.4	230.40	228.46	04:47:09
87.9	87.2	89.2	89.0	88.5	90.3	89.3	89.0	90.6	88.1	89.3	89.6	89.00	-0.03	39.3	39.6	39.2	39.4	231.04	229.08	04:48:10
87.9	87.3	89.3	89.1	88.5	90.3	89.3	89.0	90.6	88.1	89.3	89.7	89.03	-0.03	39.3	39.6	39.2	39.4	230.08	228.16	04:49:10
87.9	87.2	89.2	89.0	88.5	90.3	89.3	89.0	90.6	88.1	89.3	89.6	89.01	-0.03	39.3	39.6	39.2	39.4	230.40	228.46	04:50:10
87.9	87.3	89.3	89.1	88.5	90.3	89.3	89.0	90.6	88.1	89.3	89.6	89.02	-0.03	39.5	39.5	39.3	39.4	230.32	228.47	04:51:10
87.9	87.2	89.2	89.1	88.5	90.3	89.3	89.0	90.6	88.1	89.3	89.6	89.01	-0.03	39.4	39.6	39.3	39.4	230.64	228.74	04:52:10
87.9	87.2	89.2	89.0	88.5	90.3	89.3	89.0	90.6	88.1	89.3	89.6	89.00	-0.04	39.4	39.5	39.2	39.4	230.88	228.88	04:53:10
87.9	87.2	89.2	89.0	88.5	90.3	89.3	89.0	90.6	88.1	89.3	89.6	88.99	-0.04	39.4	39.5	39.3	39.4	230.56	228.67	04:54:10
87.9	87.2	89.2	89.0	88.5	90.3	89.3	89.0	90.6	88.1	89.3	89.6	89.01	-0.04	39.4	39.5	39.3	39.4	230.56	228.61	04:55:09
87.9	87.2	89.2	89.0	88.5	90.3	89.3	89.0	90.6	88.1	89.3	89.6	89.01	-0.04	39.4	39.5	39.2	39.4	229.84	227.88	04:56:10
87.9	87.2	89.2	89.0	88.5	90.3	89.3	89.0	90.6	88.1	89.3	89.6	88.99	-0.04	39.4	39.6	39.2	39.4	230.32	228.51	04:57:10
87.9	87.2	89.2	89.0	88.5	90.3	89.3	89.0	90.6	88.1	89.3	89.6	89.01	-0.04	39.4	39.6	39.3	39.4	230.56	228.75	04:58:10
87.9	87.3	89.2	89.0	88.5	90.3	89.3	89.0	90.6	88.1	89.3	89.6	89.01	-0.04	39.4	39.5	39.2	39.4	230.16	228.26	04:59:10
87.9	87.2	89.2	89.0	88.5	90.3	89.3	89.0	90.6	88.1	89.3	89.6	89.00	-0.04	39.4	39.5	39.3	39.4	230.96	229.07	05:00:09
87.9	87.3	89.2	89.0	88.5	90.3	89.3	89.0	90.6	88.1	89.3	89.6	89.01	-0.04	39.4	39.7	39.2	39.4	230.56	228.73	05:01:10
87.9	87.2	89.2	89.0	88.5	90.3	89.3	89.0	90.6	88.1	89.3	89.6	89.00	-0.04	39.3	39.7	39.2	39.4	230.24	228.36	05:02:10
87.9	87.2	89.2	89.0	88.5	90.3	89.3	89.0	90.6	88.1	89.3	89.6	89.01	-0.04	39.3	39.6	39.3	39.4	229.28	227.41	05:03:10
87.9	87.2	89.2	89.0	88.5	90.3	89.2	89.0	90.6	88.1	89.3	89.6	88.99	-0.04	39.4	39.5	39.3	39.4	230.40	228.53	05:04:10
87.9	87.2	89.2	89.0	88.5	90.3	89.3	89.0	90.6	88.1	89.3	89.6	89.00	-0.04	39.3	39.6	39.3	39.4	230.16	228.21	05:05:10
87.9	87.2	89.2	89.0	88.5	90.3	89.3	89.0	90.6	88.1	89.3	89.6	89.00	-0.04	39.4	39.6	39.2	39.4	230.72	228.86	05:06:10
87.9	87.2	89.2	89.0	88.5	90.3	89.2	89.0	90.6	88.1	89.3	89.6	88.99	-0.04	39.4	39.6	39.2	39.4	229.92	228.09	05:07:10
87.9	87.2	89.2	89.0	88.5	90.3	89.3	89.0	90.7	88.1	89.3	89.6	89.01	-0.04	39.3	39.5	39.2	39.4	231.12	229.12	05:08:10
87.9	87.2	89.2	89.0	88.5	90.3	89.2	89.0	90.6	88.1	89.3	89.6	88.99	-0.04	39.4	39.5	39.2	39.4	230.24	228.36	05:09:10
87.9	87.2	89.2	89.0	88.5	90.3	89.3	89.0	90.6	88.1	89.2	89.6	88.99	-0.04	39.4	39.6	39.3	39.4	230.56	228.72	05:10:10
87.9	87.2	89.2	89.0	88.5	90.3	89.2	89.0	90.6	88.1	89.3	89.6	88.99	-0.04	39.3	39.6	39.3	39.4	229.84	227.95	05:11:10
87.9	87.3	89.2	89.0	88.5	90.3	89.3	89.0	90.6	88.1	89.3	89.6	89.01	-0.04	39.3	39.6	39.3	39.4	230.24	228.27	05:12:10
87.9	87.2	89.2	89.0	88.5	90.3	89.3	89.0	90.6	88.1	89.3	89.6	89.01	-0.04	39.3	39.6	39.2	39.4	230.56	228.60	05:13:10
87.8	87.2	89.2	89.0	88.5	90.3	89.2	89.0	90.6	88.1	89.2	89.6	88.98	-0.04	39.3	39.7	39.2	39.4	230.16	228.29	05:14:10
87.9	87.2	89.2	89.0	88.5	90.3	89.3	89.0	90.6	88.1	89.3	89.6	89.00	-0.04	39.3	39.5	39.2	39.3	230.16	228.11	05:15:10
87.9	87.2	89.2	89.0	88.5	90.3	89.3	89.0	90.6	88.1	89.3	89.6	89.00	-0.04	39.4	39.5	39.3	39.4	229.92	228.00	05:16:10
87.9	87.2	89.2	89.0	88.5	90.3	89.3	89.0	90.6	88.1	89.3	89.6	89.01	-0.04	39.4	39.5	39.2	39.4	229.76	227.83	05:17:10
87.9	87.2	89.2	89.0	88.5	90.3	89.3	89.0	90.6	88.1	89.3	89.6	89.00	-0.04	39.4	39.5	39.2	39.4	230.00	228.11	05:18:10
87.9	87.2	89.2	89.0	88.5	90.3	89.3	89.0	90.6	88.1	89.3	89.6	89.01	-0.04	39.4	39.6	39.2	39.4	230.08	228.20	05:19:10
87.9	87.2	89.2	89.0	88.5	90.3	89.2	89.0	90.6	88.1	89.3	89.6	88.99	-0.04	39.4	39.6	39.2	39.4	229.20	227.37	05:20:10
87.9	87.2	89.2	89.0	88.5	90.3	89.3	89.0	90.6	88.1	89.3	89.6	89.00	-0.04	39.3	39.5	39.2	39.4	229.68	227.71	05:21:10
87.9	87.2	89.2	89.0	88.5	90.3	89.3	89.0	90.6	88.1	89.3	89.6	88.99	-0.04	39.4	39.5	39.2	39.4	229.76	227.92	05:22:10
87.9	87.3	89.2	89.0	88.5	90.3	89.3	89.0	90.7	88.1	89.3	89.6	89.01	-0.04	39.3	39.7	39.2	39.4	229.76	227.93	05:23:10
87.9	87.2	89.2	89.0	88.5	90.3	89.3	89.0	90.6	88.1	89.3	89.6	89.00	-0.04	39.3	39.6	39.3	39.4	229.92	228.00	05:24:10
87.9	87.2	89.2	89.0	88.5	90.3	89.3	89.0	90.6	88.1	89.3	89.6	89.01	-0.04	39.4	39.5	39.2	39.4	230.24	228.26	05:25:10
87.9	87.3	89.2	89.0	88.5	90.3	89.3	89.0	90.6	88.1	89.3	89.6	89.02	-0.03	39.4	39.5	39.2	39.4	229.92	227.97	05:26:10
87.9	87.2	89.2	89.0	88.5	90.3	89.3	89.0	90.6	88.1	89.3	89.6	89.01	-0.03	39.3	39.6	39.3	39.4	231.04	229.15	05:27:10

COMMENTS _____

Tested By Frank G. Dewey Date 3-24-93 Reviewed By C L Rutledge Date 3-24-93

POSITION 1			POSITION 2			POSITION 3			POSITION AVERAGE			AVE		AMBIENT TEMPERATURE				AMPS		
Trd1	Tbk1	Twh1	Trd2	Tbk2	Twh2	Trd3	Tbk3	Twh3	Tav1	Tav2	Tav3	Twave	SLOPE	Tam1	Tam2	Tam3	Taav	It	I'	TIME
86.3	86.1	87.6	89.3	89.3	90.4	88.3	88.3	89.5	86.7	89.7	88.7	88.34	0.09	40.1	40.3	40.0	40.1	215.36	214.84	11:31:11
86.3	86.1	87.6	89.2	89.3	90.4	88.3	88.2	89.5	86.6	89.6	88.7	88.32	0.09	40.1	40.2	40.0	40.1	215.68	215.20	11:32:11
86.3	86.1	87.6	89.2	89.3	90.4	88.3	88.2	89.5	86.7	89.6	88.7	88.33	0.08	40.1	40.2	40.0	40.1	215.36	214.83	11:33:11
86.3	86.1	87.6	89.3	89.3	90.4	88.3	88.3	89.6	86.7	89.7	88.7	88.35	0.08	40.1	40.3	40.0	40.1	215.28	214.80	11:34:11
86.3	86.1	87.6	89.3	89.3	90.4	88.3	88.3	89.6	86.7	89.7	88.7	88.35	0.08	40.1	40.3	40.1	40.1	215.28	214.80	11:35:11
86.3	86.1	87.6	89.3	89.3	90.4	88.3	88.2	89.6	86.7	89.7	88.7	88.34	0.08	40.1	40.2	40.0	40.1	215.68	215.15	11:36:11
86.3	86.1	87.6	89.2	89.3	90.4	88.3	88.3	89.6	86.7	89.6	88.7	88.34	0.07	40.0	40.2	40.0	40.1	215.76	215.20	11:37:11
86.3	86.1	87.6	89.2	89.3	90.4	88.3	88.2	89.5	86.7	89.6	88.7	88.33	0.07	40.1	40.2	40.0	40.1	216.40	215.89	11:38:11
86.3	86.1	87.6	89.3	89.3	90.4	88.3	88.3	89.6	86.7	89.7	88.7	88.34	0.07	40.1	40.2	40.0	40.1	216.16	215.64	11:39:11
86.3	86.1	87.6	89.2	89.3	90.4	88.3	88.3	89.6	86.7	89.6	88.7	88.34	0.06	40.1	40.2	40.0	40.1	216.32	215.80	11:40:11
86.3	86.1	87.6	89.3	89.3	90.4	88.3	88.3	89.5	86.7	89.7	88.7	88.34	0.06	40.1	40.3	40.0	40.1	215.92	215.42	11:41:11
86.3	86.1	87.6	89.2	89.3	90.4	88.3	88.3	89.6	86.7	89.6	88.7	88.33	0.06	40.1	40.2	40.0	40.1	216.16	215.66	11:42:11
86.3	86.1	87.6	89.3	89.3	90.4	88.3	88.3	89.5	86.7	89.7	88.7	88.35	0.05	40.1	40.3	40.1	40.1	216.80	216.27	11:43:11
86.3	86.1	87.6	89.3	89.3	90.4	88.3	88.3	89.6	86.7	89.7	88.7	88.35	0.05	40.1	40.2	40.0	40.1	217.12	216.62	11:44:11
86.3	86.1	87.6	89.3	89.3	90.4	88.3	88.2	89.5	86.7	89.7	88.7	88.33	0.05	40.1	40.3	40.0	40.1	217.12	216.67	11:45:11
86.3	86.1	87.6	89.3	89.3	90.4	88.3	88.3	89.6	86.7	89.7	88.7	88.34	0.05	40.2	40.3	40.0	40.2	216.72	216.27	11:46:11
86.3	86.1	87.6	89.3	89.3	90.4	88.3	88.3	89.5	86.7	89.7	88.7	88.34	0.04	40.1	40.3	40.1	40.1	217.04	216.53	11:47:11
86.3	86.1	87.6	89.3	89.3	90.4	88.3	88.3	89.5	86.7	89.7	88.7	88.34	0.04	40.1	40.3	40.0	40.1	215.04	214.54	11:48:11
86.3	86.1	87.6	89.3	89.3	90.4	88.3	88.3	89.6	86.7	89.7	88.7	88.34	0.04	40.1	40.3	40.1	40.1	216.40	215.89	11:49:11
86.3	86.1	87.6	89.2	89.3	90.4	88.3	88.3	89.6	86.7	89.7	88.7	88.34	0.04	40.1	40.3	40.0	40.1	216.24	215.74	11:50:11
86.3	86.1	87.6	89.3	89.3	90.4	88.3	88.3	89.6	86.7	89.7	88.7	88.35	0.04	40.1	40.3	40.0	40.2	216.48	215.99	11:51:11
86.3	86.1	87.6	89.2	89.3	90.4	88.3	88.3	89.6	86.7	89.7	88.7	88.35	0.04	40.1	40.3	40.0	40.1	217.52	217.02	11:52:11
86.3	86.1	87.6	89.2	89.3	90.5	88.3	88.3	89.6	86.7	89.7	88.7	88.35	0.04	40.1	40.3	40.1	40.2	216.56	216.08	11:53:11
86.3	86.1	87.6	89.3	89.3	90.4	88.3	88.3	89.6	86.7	89.7	88.7	88.36	0.04	40.1	40.3	40.1	40.2	216.64	216.20	11:54:11
86.3	86.1	87.6	89.3	89.3	90.5	88.3	88.3	89.6	86.7	89.7	88.7	88.35	0.04	40.1	40.3	40.1	40.2	217.20	216.71	11:55:11
86.3	86.1	87.6	89.3	89.3	90.4	88.3	88.3	89.6	86.7	89.7	88.7	88.35	0.04	40.1	40.3	40.1	40.2	216.80	216.32	11:56:11
86.3	86.1	87.6	89.3	89.3	90.4	88.3	88.3	89.6	86.7	89.7	88.7	88.34	0.03	40.1	40.3	40.1	40.1	215.84	215.37	11:57:11
86.3	86.1	87.6	89.3	89.3	90.4	88.3	88.3	89.6	86.7	89.7	88.7	88.35	0.03	40.1	40.3	40.1	40.2	216.80	216.35	11:58:11
86.3	86.1	87.6	89.3	89.3	90.4	88.3	88.3	89.6	86.7	89.7	88.7	88.35	0.03	40.1	40.3	40.1	40.1	216.80	216.31	11:59:11
86.3	86.1	87.6	89.3	89.3	90.4	88.3	88.3	89.5	86.7	89.7	88.7	88.34	0.03	40.2	40.3	40.1	40.2	216.48	216.06	12:00:11
86.3	86.1	87.6	89.3	89.3	90.5	88.3	88.3	89.6	86.7	89.7	88.7	88.36	0.03	40.1	40.3	40.1	40.2	216.48	216.01	12:01:11
86.3	86.1	87.6	89.3	89.3	90.5	88.3	88.3	89.6	86.7	89.7	88.7	88.38	0.03	40.2	40.3	40.1	40.2	216.16	215.67	12:02:11
86.3	86.1	87.6	89.2	89.3	90.4	88.3	88.3	89.6	86.7	89.7	88.7	88.35	0.03	40.2	40.3	40.1	40.2	216.48	216.08	12:03:11
86.3	86.1	87.6	89.2	89.3	90.4	88.3	88.3	89.6	86.7	89.7	88.7	88.34	0.03	40.1	40.3	40.1	40.2	217.12	216.68	12:04:11
86.3	86.1	87.6	89.3	89.3	90.5	88.3	88.3	89.6	86.7	89.7	88.7	88.37	0.03	40.2	40.3	40.1	40.2	216.80	216.41	12:05:11
86.3	86.1	87.6	89.2	89.3	90.5	88.3	88.3	89.6	86.7	89.7	88.7	88.36	0.03	40.2	40.3	40.1	40.2	216.96	216.55	12:06:10
86.3	86.1	87.6	89.3	89.3	90.4	88.3	88.3	89.6	86.7	89.7	88.7	88.35	0.03	40.2	40.3	40.1	40.2	216.48	216.07	12:07:10
86.3	86.1	87.6	89.3	89.3	90.5	88.3	88.3	89.6	86.7	89.7	88.7	88.37	0.03	40.1	40.3	40.1	40.2	216.08	215.65	12:08:11
86.3	86.1	87.6	89.3	89.3	90.5	88.3	88.3	89.6	86.7	89.7	88.7	88.37	0.03	40.2	40.3	40.1	40.2	215.68	215.26	12:09:11
86.3	86.1	87.6	89.3	89.3	90.4	88.3	88.3	89.6	86.7	89.7	88.7	88.35	0.03	40.2	40.3	40.1	40.2	216.08	215.70	12:10:11
86.3	86.1	87.6	89.2	89.3	90.5	88.3	88.3	89.6	86.7	89.7	88.7	88.35	0.03	40.2	40.3	40.1	40.2	216.32	215.91	12:11:11
86.3	86.1	87.6	89.3	89.3	90.5	88.3	88.3	89.6	86.7	89.7	88.7	88.37	0.03	40.2	40.3	40.1	40.2	216.56	216.15	12:12:10
86.3	86.1	87.6	89.3	89.3	90.5	88.3	88.3	89.6	86.7	89.7	88.7	88.37	0.03	40.2	40.3	40.1	40.2	217.12	216.71	12:13:11
86.3	86.1	87.6	89.3	89.3	90.4	88.3	88.3	89.6	86.7	89.7	88.7	88.36	0.03	40.2	40.3	40.1	40.2	217.20	216.81	12:14:11
86.3	86.1	87.6	89.3	89.3	90.5	88.3	88.3	89.6	86.7	89.7	88.7	88.37	0.03	40.2	40.3	40.1	40.2	217.44	216.98	12:15:11
86.3	86.1	87.6	89.3	89.3	90.5	88.3	88.3	89.6	86.7	89.7	88.7	88.36	0.04	40.2	40.3	40.1	40.2	217.60	217.19	12:16:11
86.3	86.1	87.6	89.3	89.3	90.5	88.3	88.3	89.6	86.7	89.7	88.7	88.37	0.04	40.1	40.3	40.1	40.2	217.44	216.97	12:17:11
86.3	86.1	87.6	89.3	89.3	90.5	88.3	88.3	89.6	86.7	89.7	88.7	88.38	0.04	40.2	40.3	40.1	40.2	216.64	216.26	12:18:11
86.3	86.1	87.6	89.3	89.3	90.4	88.3	88.3	89.6	86.7	89.7	88.7	88.37	0.04	40.2	40.4	40.2	40.2	217.44	217.14	12:19:11
86.3	86.1	87.7	89.3	89.3	90.5	88.3	88.3	89.6	86.7	89.7	88.7	88.39	0.04	40.2	40.3	40.1	40.2	216.56	216.14	12:20:11
86.3	86.1	87.6	89.3	89.3	90.5	88.3	88.3	89.6	86.7	89.7	88.7	88.37	0.05	40.2	40.4	40.1	40.2	216.40	216.06	12:21:11
86.3	86.2	87.7	89.3	89.3	90.5	88.3	88.3	89.6	86.7	89.7	88.8	88.39	0.05	40.2	40.3	40.2	40.2	216.32	215.94	12:22:11
86.3	86.2	87.7	89.3	89.3	90.5	88.3	88.3	89.6	86.7	89.7	88.8	88.40	0.05	40.2	40.4	40.2	40.2	216.24	215.88	12:23:11
86.3	86.2	87.7	89.3	89.3	90.5	88.4	88.3	89.6	86.7	89.7	88.8	88.40	0.05	40.2	40.4	40.1	40.2	216.80	216.41	12:24:11
86.4	86.2	87.7	89.3	89.3	90.5	88.3	88.3	89.6	86.7	89.7	88.8	88.39	0.06	40.2	40.3	40.2	40.2	216.64	216.25	12:25:11
86.3	86.2	87.6	89.3	89.3	90.5	88.3	88.3	89.6	86.7	89.7	88.7	88.38	0.06	40.2	40.4	40.2	40.3	216.32	216.00	12:26:11
86.3	86.2	87.7	89.4	89.3	90.5	88.3	88.3	89.6	86.7	89.7	88.7	88.39	0.06	40.2	40.3	40.2	40.2	215.84	215.48	12:27:11
86.4	86.2	87.7	89.3	89.3	90.5	88.3	88.3	89.6	86.7	89.7	88.8	88.40	0.06	40.2	40.3	40.1	40.2	216.00	215.56	12:28:11
86.3	86.2	87.7	89.4	89.3	90.5	88.4	88.3	89.6	86.7	89.7	88.8	88.40	0.06	40.2	40.3	40.2	40.2	216.72	216.32	12:29:11
86.3	86.1	87.7	89.4	89.3	90.5	88.3	88.3	89.6	86.7	89.7	88.8	88.39	0.06	40.2	40.4	40.2	40.2	216.48	216.08	12:30:11

COMMENTS _____

Tested By Frank A. Dumez Date 3-20-93 Reviewed By C.L. Rutledge Date 3-20-93

AMPACITY TEST. JOB NUMBER 93-0501. SAMPLE NUMBER 93-0501-03 DATA FILE ITEM03NO.002 03-20-1993

POSITION 1			POSITION 2			POSITION 3			POSITION AVERAGE			AVE		AMBIENT TEMPERATURE				AMPS		
Trd1	Tbk1	Twh1	Trd2	Tbk2	Twh2	Trd3	Tbk3	Twh3	Tav1	Tav2	Tav3	Twave	SLOPE	Tam1	Tam2	Tam3	Taav	It	I'	TIME
86.3	86.2	87.7	89.3	89.3	90.5	88.4	88.3	89.6	86.7	89.7	88.8	88.40	0.06	40.2	40.4	40.2	40.3	216.64	216.32	12:31:11
86.3	86.2	87.7	89.3	89.3	90.5	88.3	88.3	89.6	86.7	89.7	88.7	88.39	0.06	40.2	40.4	40.2	40.3	216.80	216.47	12:32:11
86.3	86.1	87.6	89.3	89.3	90.5	88.3	88.3	89.6	86.7	89.7	88.7	88.38	0.06	40.2	40.4	40.2	40.2	216.80	216.47	12:33:11
86.3	86.2	87.7	89.3	89.3	90.5	88.3	88.3	89.6	86.7	89.7	88.7	88.38	0.06	40.2	40.4	40.2	40.2	216.64	216.31	12:34:11
86.3	86.2	87.6	89.2	89.3	90.5	88.3	88.3	89.6	86.7	89.7	88.8	88.38	0.06	40.2	40.4	40.2	40.3	216.48	216.16	12:35:11
86.3	86.2	87.7	89.4	89.3	90.5	88.4	88.3	89.6	86.7	89.7	88.8	88.40	0.06	40.2	40.3	40.2	40.2	215.76	215.36	12:36:11
86.3	86.1	87.6	89.3	89.3	90.5	88.3	88.3	89.6	86.7	89.7	88.7	88.37	0.06	40.2	40.4	40.2	40.3	216.08	215.76	12:37:11
86.3	86.1	87.6	89.3	89.3	90.5	88.3	88.3	89.6	86.7	89.7	88.7	88.37	0.06	40.2	40.4	40.2	40.3	216.40	216.15	12:38:11
86.3	86.2	87.7	89.3	89.3	90.5	88.3	88.3	89.6	86.7	89.7	88.7	88.39	0.06	40.2	40.4	40.2	40.2	216.16	215.81	12:39:11
86.4	86.2	87.7	89.3	89.3	90.5	88.3	88.3	89.6	86.7	89.7	88.8	88.39	0.06	40.3	40.4	40.2	40.3	216.40	216.14	12:40:11
86.3	86.2	87.7	89.3	89.3	90.5	88.4	88.3	89.6	86.7	89.7	88.8	88.40	0.06	40.2	40.4	40.2	40.3	216.88	216.55	12:41:11
86.4	86.2	87.7	89.3	89.3	90.5	88.4	88.3	89.6	86.7	89.7	88.8	88.41	0.06	40.2	40.4	40.2	40.3	217.12	216.81	12:42:11
86.4	86.2	87.7	89.3	89.3	90.5	88.3	88.3	89.6	86.7	89.7	88.8	88.40	0.06	40.3	40.4	40.2	40.3	217.12	216.89	12:43:11
86.3	86.2	87.7	89.3	89.3	90.5	88.4	88.3	89.6	86.7	89.7	88.8	88.40	0.06	40.3	40.4	40.2	40.3	216.96	216.73	12:44:11
86.3	86.1	87.7	89.3	89.3	90.5	88.3	88.3	89.6	86.7	89.7	88.8	88.39	0.06	40.2	40.4	40.2	40.3	216.72	216.45	12:45:11
86.4	86.2	87.7	89.4	89.3	90.5	88.4	88.3	89.6	86.7	89.7	88.8	88.42	0.06	40.3	40.4	40.3	40.3	216.08	215.82	12:46:11
86.3	86.2	87.7	89.3	89.3	90.5	88.3	88.3	89.6	86.7	89.7	88.8	88.39	0.06	40.2	40.4	40.2	40.3	216.08	215.80	12:47:11
86.3	86.2	87.7	89.4	89.3	90.5	88.4	88.3	89.6	86.7	89.7	88.8	88.41	0.06	40.3	40.4	40.2	40.3	215.84	215.59	12:48:11
86.4	86.2	87.7	89.4	89.3	90.5	88.4	88.3	89.6	86.7	89.7	88.8	88.42	0.06	40.2	40.4	40.2	40.3	216.16	215.78	12:49:11
86.4	86.2	87.7	89.3	89.3	90.5	88.4	88.3	89.6	86.7	89.7	88.8	88.42	0.06	40.3	40.4	40.2	40.3	216.48	216.17	12:50:11
86.4	86.2	87.7	89.3	89.3	90.5	88.3	88.3	89.6	86.7	89.7	88.8	88.40	0.06	40.3	40.4	40.2	40.3	215.84	215.57	12:51:11
86.4	86.2	87.7	89.4	89.3	90.5	88.4	88.3	89.6	86.7	89.7	88.8	88.41	0.06	40.3	40.4	40.2	40.3	216.16	215.90	12:52:11
86.4	86.2	87.7	89.4	89.3	90.5	88.4	88.3	89.6	86.7	89.7	88.8	88.41	0.06	40.3	40.4	40.2	40.3	215.60	215.34	12:53:11
86.3	86.2	87.7	89.3	89.3	90.5	88.3	88.3	89.6	86.7	89.7	88.8	88.40	0.06	40.3	40.4	40.2	40.3	215.44	215.17	12:54:11
86.4	86.2	87.7	89.3	89.3	90.5	88.4	88.3	89.6	86.7	89.7	88.8	88.41	0.06	40.3	40.4	40.2	40.3	216.00	215.80	12:55:11
86.4	86.2	87.7	89.4	89.3	90.5	88.4	88.4	89.6	86.7	89.7	88.8	88.42	0.06	40.3	40.4	40.2	40.3	216.16	215.92	12:56:11
86.4	86.2	87.7	89.3	89.4	90.5	88.4	88.3	89.7	86.8	89.7	88.8	88.43	0.06	40.3	40.4	40.2	40.3	216.16	215.85	12:57:11
86.4	86.2	87.7	89.3	89.3	90.5	88.4	88.3	89.6	86.7	89.7	88.8	88.40	0.06	40.3	40.4	40.2	40.3	216.24	215.95	12:58:11
86.4	86.2	87.7	89.4	89.4	90.5	88.4	88.3	89.6	86.7	89.8	88.8	88.43	0.06	40.3	40.5	40.3	40.4	215.44	215.24	12:59:11
86.4	86.2	87.7	89.3	89.3	90.5	88.4	88.3	89.6	86.7	89.7	88.8	88.40	0.06	40.3	40.4	40.2	40.3	215.68	215.48	13:00:11
86.3	86.2	87.7	89.4	89.3	90.5	88.4	88.3	89.6	86.7	89.7	88.8	88.42	0.06	40.3	40.4	40.3	40.3	216.32	216.10	13:01:11
86.4	86.2	87.7	89.4	89.3	90.5	88.4	88.3	89.6	86.8	89.7	88.8	88.43	0.06	40.3	40.5	40.3	40.3	216.80	216.61	13:02:11
86.4	86.2	87.7	89.3	89.3	90.5	88.4	88.3	89.6	86.8	89.7	88.8	88.43	0.06	40.3	40.5	40.3	40.3	216.24	216.01	13:03:11
86.4	86.2	87.7	89.4	89.3	90.5	88.4	88.3	89.6	86.7	89.7	88.8	88.42	0.06	40.3	40.5	40.2	40.3	216.16	215.94	13:04:11
86.4	86.2	87.7	89.4	89.4	90.5	88.4	88.3	89.6	86.7	89.7	88.8	88.42	0.06	40.3	40.4	40.2	40.3	215.92	215.67	13:05:11
86.4	86.2	87.7	89.3	89.4	90.5	88.4	88.3	89.6	86.7	89.7	88.8	88.42	0.06	40.3	40.5	40.2	40.3	215.36	215.13	13:06:11
86.4	86.2	87.7	89.4	89.4	90.5	88.4	88.3	89.6	86.7	89.7	88.8	88.42	0.06	40.3	40.5	40.2	40.3	215.52	215.27	13:07:11
86.4	86.2	87.7	89.3	89.3	90.5	88.4	88.3	89.6	86.7	89.7	88.8	88.41	0.06	40.3	40.5	40.3	40.4	215.36	215.22	13:08:11
86.4	86.2	87.7	89.3	89.3	90.5	88.4	88.3	89.6	86.7	89.7	88.8	88.42	0.06	40.4	40.5	40.3	40.4	216.16	216.00	13:09:11
86.4	86.2	87.7	89.4	89.3	90.5	88.4	88.3	89.6	86.7	89.7	88.8	88.42	0.06	40.3	40.4	40.3	40.3	216.80	216.60	13:10:11
86.4	86.2	87.7	89.3	89.3	90.5	88.4	88.3	89.6	86.7	89.7	88.8	88.41	0.05	40.4	40.4	40.3	40.4	216.80	216.61	13:11:11
86.4	86.2	87.7	89.4	89.4	90.5	88.4	88.3	89.6	86.8	89.8	88.8	88.43	0.05	40.4	40.5	40.3	40.4	215.76	215.59	13:12:11
86.4	86.2	87.7	89.3	89.4	90.5	88.4	88.3	89.6	86.8	89.7	88.8	88.42	0.05	40.3	40.5	40.3	40.4	215.84	215.69	13:13:11
86.4	86.2	87.7	89.3	89.3	90.5	88.4	88.3	89.6	86.8	89.7	88.8	88.42	0.05	40.3	40.5	40.3	40.4	215.68	215.49	13:14:11
86.4	86.2	87.7	89.4	89.4	90.5	88.4	88.3	89.7	86.8	89.8	88.8	88.44	0.05	40.3	40.5	40.3	40.4	215.60	215.45	13:15:11
86.4	86.2	87.7	89.3	89.4	90.5	88.4	88.3	89.6	86.8	89.7	88.8	88.42	0.05	40.3	40.5	40.3	40.4	215.76	215.60	13:16:11
86.4	86.2	87.7	89.4	89.4	90.5	88.4	88.3	89.7	86.8	89.8	88.8	88.44	0.05	40.3	40.4	40.3	40.3	216.16	215.91	13:17:11
86.3	86.2	87.7	89.3	89.3	90.5	88.3	88.3	89.6	86.7	89.7	88.8	88.40	0.05	40.3	40.5	40.3	40.4	215.76	215.61	13:18:11
86.4	86.2	87.7	89.3	89.3	90.5	88.4	88.3	89.6	86.7	89.7	88.8	88.41	0.04	40.3	40.5	40.3	40.4	215.44	215.32	13:19:11
86.4	86.2	87.7	89.3	89.4	90.5	88.4	88.3	89.6	86.8	89.7	88.8	88.43	0.04	40.3	40.5	40.3	40.3	215.12	214.92	13:20:11
86.4	86.2	87.7	89.3	89.4	90.5	88.4	88.3	89.6	86.7	89.7	88.8	88.41	0.04	40.3	40.5	40.3	40.4	215.20	215.06	13:21:11
86.4	86.2	87.7	89.4	89.4	90.5	88.4	88.3	89.7	86.8	89.7	88.8	88.43	0.04	40.3	40.5	40.3	40.4	216.48	216.34	13:22:11
86.3	86.2	87.7	89.3	89.3	90.5	88.3	88.3	89.6	86.7	89.7	88.8	88.41	0.04	40.3	40.5	40.3	40.4	216.16	216.06	13:23:11
86.4	86.2	87.7	89.3	89.4	90.5	88.4	88.3	89.7	86.8	89.7	88.8	88.43	0.04	40.3	40.5	40.3	40.4	216.72	216.59	13:24:11
86.4	86.2	87.7	89.4	89.3	90.5	88.4	88.3	89.6	86.8	89.8	88.8	88.43	0.04	40.4	40.4	40.3	40.4	215.84	215.66	13:25:11
86.4	86.2	87.7	89.3	89.3	90.5	88.4	88.3	89.6	86.8	89.7	88.8	88.42	0.04	40.4	40.5	40.3	40.4	213.44	213.35	13:26:11
86.4	86.2	87.7	89.3	89.4	90.5	88.4	88.3	89.6	86.8	89.7	88.8	88.43	0.04	40.4	40.5	40.3	40.4	215.68	215.54	13:27:11
86.4	86.2	87.7	89.3	89.4	90.5	88.4	88.4	89.6	86.8	89.7	88.8	88.43	0.04	40.3	40.5	40.3	40.4	216.16	216.06	13:28:11
86.4	86.2	87.7	89.4	89.4	90.5	88.4	88.4	89.6	86.8	89.8	88.8	88.44	0.04	40.4	40.6	40.3	40.4	215.92	215.86	13:29:11
86.4	86.2	87.7	89.4	89.3	90.5	88.4	88.3	89.6	86.8	89.7	88.8	88.43	0.04	40.4	40.6	40.3	40.4	216.56	216.52	13:30:11

COMMENTS _____

Tested By Frank A. Deiney Date 3-20-93 Reviewed By C L Rutledge Date 3-20-93

POSITION 1 | _POSITION 2_ | _POSITION 3_ | POSITION AVERAGE | AVE | AMBIENT TEMPERATURE | AMPS

Trd1	Tbk1	Tvh1	Trd2	Tbk2	Tvh2	Trd3	Tbk3	Tvh3	Tav1	Tav2	Tav3	Twave	SLOPE	Tam1	Tam2	Tam3	Taav	It	I'	TIME
86.4	86.2	87.7	89.3	89.4	90.5	88.4	88.3	89.7	86.8	89.7	88.8	88.43	0.04	40.3	40.5	40.3	40.4	216.32	216.22	13:31:11
86.4	86.2	87.7	89.4	89.3	90.5	88.4	88.3	89.6	86.7	89.7	88.8	88.42	0.04	40.4	40.6	40.3	40.4	216.80	216.76	13:32:11
86.4	86.2	87.7	89.3	89.4	90.5	88.4	88.3	89.6	86.8	89.7	88.8	88.42	0.04	40.4	40.6	40.3	40.4	216.32	216.28	13:33:11
86.4	86.2	87.7	89.4	89.4	90.5	88.4	88.3	89.7	86.8	89.8	88.8	88.44	0.04	40.4	40.5	40.3	40.4	216.40	216.30	13:34:11
86.4	86.2	87.7	89.4	89.4	90.6	88.4	88.4	89.7	86.8	89.8	88.8	88.45	0.04	40.4	40.5	40.3	40.4	216.00	215.91	13:35:11
86.4	86.2	87.7	89.4	89.4	90.6	88.4	88.4	89.7	86.8	89.8	88.8	88.45	0.04	40.4	40.5	40.3	40.4	215.84	215.73	13:36:11
86.4	86.2	87.7	89.4	89.4	90.5	88.4	88.4	89.6	86.8	89.8	88.8	88.44	0.04	40.4	40.6	40.4	40.4	215.84	215.83	13:37:11
86.4	86.2	87.7	89.3	89.4	90.6	88.4	88.4	89.7	86.8	89.8	88.8	88.45	0.04	40.4	40.6	40.3	40.4	215.04	214.98	13:38:11
86.4	86.2	87.7	89.4	89.4	90.5	88.4	88.4	89.7	86.8	89.8	88.8	88.45	0.04	40.4	40.5	40.3	40.4	215.36	215.29	13:39:11
86.4	86.2	87.7	89.3	89.4	90.5	88.4	88.3	89.7	86.8	89.7	88.8	88.43	0.04	40.4	40.5	40.3	40.4	215.36	215.27	13:40:11
86.4	86.2	87.7	89.4	89.4	90.5	88.4	88.3	89.7	86.8	89.8	88.8	88.44	0.04	40.4	40.6	40.4	40.4	215.04	215.01	13:41:11
86.4	86.2	87.7	89.3	89.4	90.5	88.4	88.3	89.7	86.8	89.8	88.8	88.44	0.04	40.4	40.5	40.3	40.4	215.52	215.41	13:42:11
86.4	86.2	87.7	89.4	89.4	90.5	88.4	88.3	89.7	86.8	89.8	88.8	88.44	0.04	40.4	40.5	40.3	40.4	215.52	215.41	13:43:11
86.4	86.2	87.7	89.4	89.4	90.5	88.4	88.4	89.6	86.8	89.8	88.8	88.44	0.04	40.3	40.5	40.3	40.4	215.44	215.34	13:44:11
86.4	86.2	87.7	89.3	89.4	90.5	88.4	88.3	89.7	86.8	89.7	88.8	88.43	0.03	40.3	40.5	40.3	40.4	215.68	215.52	13:45:11
86.4	86.2	87.7	89.3	89.4	90.5	88.4	88.3	89.6	86.7	89.7	88.8	88.42	0.03	40.4	40.5	40.3	40.4	215.20	215.06	13:46:11
86.4	86.2	87.7	89.4	89.4	90.6	88.4	88.4	89.7	86.8	89.8	88.8	88.45	0.03	40.3	40.4	40.3	40.3	215.84	215.59	13:47:11
86.4	86.2	87.7	89.4	89.4	90.6	88.4	88.4	89.7	86.8	89.8	88.8	88.46	0.04	40.4	40.5	40.3	40.4	215.52	215.29	13:48:11
86.4	86.2	87.7	89.3	89.4	90.5	88.4	88.3	89.7	86.8	89.8	88.8	88.43	0.04	40.3	40.5	40.2	40.3	215.44	215.18	13:49:11
86.4	86.2	87.7	89.4	89.4	90.5	88.4	88.4	89.7	86.8	89.8	88.8	88.45	0.04	40.3	40.4	40.3	40.3	215.52	215.26	13:50:11
86.4	86.2	87.7	89.4	89.4	90.6	88.4	88.4	89.7	86.8	89.8	88.8	88.46	0.04	40.3	40.4	40.3	40.3	215.28	214.98	13:51:11
86.4	86.2	87.7	89.4	89.4	90.5	88.4	88.3	89.7	86.8	89.8	88.8	88.44	0.04	40.3	40.4	40.3	40.3	216.16	215.88	13:52:11
86.4	86.2	87.7	89.3	89.4	90.5	88.4	88.3	89.7	86.8	89.7	88.8	88.44	0.04	40.3	40.4	40.2	40.3	216.00	215.73	13:53:11
86.4	86.2	87.7	89.3	89.4	90.5	88.4	88.3	89.7	86.8	89.7	88.8	88.43	0.03	40.3	40.4	40.3	40.3	215.84	215.57	13:54:11
86.4	86.2	87.7	89.4	89.4	90.5	88.4	88.4	89.7	86.8	89.8	88.8	88.45	0.03	40.3	40.4	40.3	40.3	216.48	216.19	13:55:11
86.4	86.2	87.7	89.4	89.3	90.5	88.4	88.3	89.6	86.8	89.8	88.8	88.44	0.03	40.3	40.4	40.2	40.3	216.40	216.05	13:56:11
86.4	86.2	87.7	89.4	89.4	90.6	88.4	88.4	89.7	86.8	89.8	88.8	88.46	0.04	40.3	40.4	40.2	40.3	216.16	215.80	13:57:11
86.4	86.2	87.7	89.4	89.4	90.5	88.4	88.4	89.7	86.8	89.8	88.8	88.45	0.03	40.3	40.4	40.2	40.3	216.16	215.77	13:58:11
86.4	86.2	87.7	89.4	89.4	90.6	88.4	88.4	89.7	86.8	89.8	88.8	88.47	0.04	40.3	40.4	40.2	40.3	215.68	215.24	13:59:11
86.4	86.2	87.7	89.4	89.4	90.6	88.4	88.4	89.7	86.8	89.8	88.8	88.46	0.04	40.3	40.4	40.2	40.3	215.20	214.79	14:00:11
86.4	86.2	87.7	89.4	89.4	90.6	88.4	88.4	89.7	86.8	89.8	88.8	88.46	0.04	40.3	40.3	40.2	40.3	215.04	214.61	14:01:11
86.4	86.2	87.7	89.3	89.4	90.5	88.4	88.4	89.7	86.8	89.7	88.8	88.44	0.04	40.3	40.4	40.2	40.3	215.76	215.41	14:02:11
86.4	86.2	87.7	89.4	89.4	90.6	88.4	88.4	89.7	86.8	89.8	88.8	88.45	0.04	40.2	40.3	40.2	40.3	215.44	214.98	14:03:11
86.4	86.2	87.7	89.4	89.4	90.6	88.4	88.4	89.7	86.8	89.8	88.8	88.46	0.04	40.2	40.3	40.2	40.2	215.52	215.01	14:04:11
86.4	86.2	87.7	89.4	89.4	90.5	88.4	88.4	89.7	86.8	89.8	88.8	88.44	0.04	40.2	40.4	40.2	40.2	215.04	214.60	14:05:11
86.4	86.2	87.7	89.4	89.4	90.6	88.4	88.4	89.7	86.8	89.8	88.8	88.47	0.04	40.2	40.4	40.2	40.3	215.20	214.72	14:06:11
86.4	86.2	87.7	89.4	89.4	90.6	88.4	88.4	89.7	86.8	89.8	88.8	88.46	0.04	40.3	40.4	40.1	40.3	214.56	214.10	14:07:11
86.4	86.2	87.7	89.4	89.4	90.6	88.4	88.4	89.7	86.8	89.8	88.8	88.47	0.04	40.3	40.4	40.2	40.3	214.40	213.97	14:08:11
86.4	86.2	87.7	89.3	89.4	90.5	88.4	88.4	89.7	86.8	89.8	88.8	88.46	0.04	40.3	40.4	40.2	40.3	214.40	213.98	14:09:11
86.4	86.2	87.7	89.3	89.4	90.6	88.4	88.3	89.7	86.8	89.8	88.8	88.45	0.04	40.2	40.3	40.1	40.2	214.64	214.13	14:10:11
86.4	86.2	87.7	89.4	89.4	90.5	88.4	88.4	89.7	86.8	89.8	88.8	88.45	0.04	40.2	40.3	40.2	40.2	214.88	214.43	14:11:11
86.4	86.2	87.7	89.4	89.4	90.6	88.4	88.4	89.7	86.8	89.8	88.8	88.46	0.04	40.2	40.4	40.2	40.2	214.72	214.25	14:12:11
86.4	86.2	87.7	89.4	89.4	90.5	88.4	88.4	89.7	86.8	89.8	88.8	88.46	0.04	40.2	40.3	40.1	40.2	214.96	214.45	14:13:11
86.4	86.2	87.7	89.3	89.4	90.5	88.4	88.3	89.7	86.8	89.8	88.8	88.45	0.04	40.3	40.3	40.1	40.2	215.04	214.56	14:14:11
86.4	86.2	87.7	89.3	89.4	90.5	88.4	88.4	89.7	86.8	89.7	88.8	88.44	0.04	40.2	40.3	40.1	40.2	216.16	215.64	14:15:11
86.4	86.2	87.7	89.4	89.4	90.5	88.4	88.4	89.7	86.8	89.8	88.8	88.45	0.04	40.2	40.3	40.1	40.2	215.84	215.34	14:16:11
86.4	86.2	87.7	89.4	89.4	90.5	88.4	88.3	89.7	86.8	89.8	88.8	88.45	0.04	40.2	40.3	40.1	40.2	214.96	214.47	14:17:11
86.4	86.2	87.7	89.4	89.4	90.6	88.4	88.3	89.7	86.8	89.8	88.8	88.45	0.04	40.2	40.3	40.1	40.2	214.48	213.94	14:18:11
86.4	86.2	87.7	89.4	89.4	90.6	88.4	88.4	89.7	86.8	89.8	88.8	88.46	0.03	40.2	40.3	40.1	40.2	214.32	213.75	14:19:11
86.4	86.2	87.7	89.4	89.4	90.6	88.4	88.4	89.7	86.8	89.8	88.8	88.46	0.03	40.2	40.3	40.1	40.2	212.64	212.10	14:20:11
86.4	86.2	87.7	89.4	89.4	90.5	88.4	88.3	89.6	86.8	89.7	88.8	88.43	0.03	40.2	40.3	40.1	40.2	214.56	214.11	14:21:11
86.4	86.2	87.7	89.3	89.4	90.5	88.4	88.3	89.7	86.8	89.7	88.8	88.43	0.03	40.2	40.3	40.1	40.2	215.84	215.33	14:22:11
86.4	86.2	87.7	89.3	89.4	90.6	88.4	88.4	89.7	86.8	89.8	88.8	88.45	0.02	40.2	40.3	40.1	40.2	215.36	214.81	14:23:11
86.4	86.2	87.7	89.3	89.4	90.6	88.4	88.4	89.7	86.8	89.8	88.8	88.46	0.02	40.2	40.3	40.1	40.2	215.20	214.66	14:24:11
86.4	86.2	87.7	89.4	89.4	90.6	88.4	88.4	89.7	86.8	89.8	88.8	88.45	0.02	40.2	40.3	40.1	40.2	215.44	214.85	14:25:11
86.4	86.2	87.7	89.3	89.4	90.5	88.4	88.3	89.6	86.8	89.7	88.8	88.43	0.02	40.1	40.3	40.1	40.2	214.48	213.94	14:26:11
86.4	86.2	87.7	89.4	89.4	90.6	88.4	88.4	89.7	86.8	89.8	88.8	88.45	0.02	40.2	40.3	40.1	40.2	215.04	214.47	14:27:11
86.4	86.2	87.7	89.3	89.4	90.5	88.4	88.3	89.7	86.8	89.7	88.8	88.44	0.01	40.2	40.3	40.1	40.2	214.72	214.16	14:28:11
86.4	86.2	87.7	89.4	89.4	90.6	88.4	88.4	89.7	86.8	89.8	88.8	88.46	0.01	40.2	40.3	40.1	40.2	215.20	214.63	14:29:11
86.4	86.2	87.7	89.4	89.4	90.6	88.4	88.4	89.7	86.8	89.8	88.8	88.47	0.01	40.1	40.3	40.1	40.2	215.04	214.36	14:30:11

COMMENTS ______________________________

Tested By *Frank A. Dunn* Date 3-20-93 Reviewed By *C L Rutledge* Date 3-20-93

AMPACITY TEST. JOB NUMBER 93-0501. SAMPLE NUMBER 93-0501-04 DATA FILE ITEM04NO.001 03-17-1993 E-1

POSITION 1			POSITION 2			POSITION 3			POSITION AVERAGE			AVE		AMBIENT TEMPERATURE				AMPS		
Trd1	Tbk1	Twh1	Trd2	Tbk2	Twh2	Trd3	Tbk3	Twh3	Tav1	Tav2	Tav3	Twave	SLOPE	Tam1	Tam2	Tam3	Taav	It	I'	TIME
88.9	87.9	89.1	89.3	87.4	89.1	89.1	87.3	88.8	88.6	88.6	88.4	88.56	0.00	40.3	40.3	40.5	40.3	231.28	233.49	12:35:08
88.9	87.9	89.1	89.3	87.4	89.1	89.1	87.3	88.8	88.6	88.6	88.4	88.54	-0.00	40.3	40.3	40.4	40.3	232.00	234.21	12:36:08
88.9	87.9	89.1	89.3	87.4	89.1	89.1	87.3	88.8	88.6	88.6	88.4	88.54	-0.00	40.3	40.3	40.4	40.3	231.60	233.77	12:37:08
88.9	87.9	89.1	89.3	87.4	89.1	89.1	87.3	88.8	88.6	88.6	88.4	88.54	-0.00	40.3	40.3	40.5	40.4	231.68	233.95	12:38:08
88.9	87.9	89.1	89.3	87.4	89.1	89.1	87.3	88.8	88.6	88.6	88.4	88.53	-0.00	40.3	40.4	40.5	40.4	231.36	233.77	12:39:08
88.9	87.9	89.1	89.3	87.4	89.1	89.1	87.3	88.8	88.6	88.6	88.4	88.54	-0.00	40.3	40.5	40.4	40.4	231.20	233.57	12:40:08
88.9	87.9	89.1	89.3	87.4	89.1	89.1	87.3	88.8	88.6	88.6	88.4	88.55	-0.00	40.3	40.4	40.5	40.4	230.64	232.94	12:41:08
88.9	87.9	89.1	89.3	87.4	89.1	89.1	87.3	88.8	88.6	88.6	88.4	88.55	-0.00	40.2	40.4	40.5	40.4	231.20	233.46	12:42:08
88.9	87.9	89.1	89.3	87.4	89.1	89.1	87.3	88.8	88.6	88.6	88.4	88.54	-0.00	40.3	40.5	40.4	40.4	230.88	233.20	12:43:08
88.9	87.9	89.1	89.3	87.4	89.1	89.1	87.3	88.8	88.7	88.6	88.4	88.56	-0.00	40.3	40.4	40.5	40.4	231.52	233.76	12:44:08
88.9	87.9	89.1	89.3	87.4	89.1	89.1	87.3	88.8	88.6	88.6	88.4	88.54	-0.00	40.3	40.4	40.4	40.4	231.36	233.60	12:45:08
88.9	87.9	89.1	89.3	87.4	89.1	89.1	87.3	88.8	88.6	88.6	88.4	88.55	-0.00	40.3	40.4	40.4	40.3	231.52	233.74	12:46:08
88.9	87.9	89.1	89.3	87.4	89.1	89.1	87.3	88.8	88.7	88.6	88.4	88.55	-0.00	40.3	40.4	40.4	40.4	231.12	233.44	12:47:08
88.9	87.9	89.1	89.3	87.4	89.1	89.1	87.3	88.8	88.7	88.6	88.4	88.56	-0.00	40.3	40.4	40.4	40.4	232.24	234.46	12:48:08
88.9	87.9	89.1	89.3	87.4	89.1	89.1	87.3	88.8	88.6	88.6	88.4	88.55	-0.00	40.3	40.4	40.5	40.4	231.12	233.40	12:49:08
88.9	87.9	89.1	89.3	87.3	89.1	89.1	87.3	88.8	88.6	88.6	88.4	88.54	-0.00	40.3	40.4	40.4	40.3	232.80	234.97	12:50:08
88.9	87.9	89.1	89.3	87.3	89.1	89.1	87.3	88.8	88.6	88.6	88.4	88.53	-0.01	40.3	40.4	40.5	40.4	232.00	234.30	12:51:08
88.9	87.9	89.1	89.3	87.4	89.1	89.1	87.3	88.8	88.6	88.6	88.4	88.54	-0.01	40.3	40.4	40.4	40.4	232.40	234.69	12:52:08
89.0	87.9	89.1	89.3	87.4	89.1	89.1	87.3	88.8	88.6	88.6	88.4	88.55	-0.01	40.3	40.3	40.4	40.4	231.84	234.09	12:53:08
88.9	87.9	89.1	89.3	87.4	89.1	89.1	87.3	88.8	88.6	88.6	88.4	88.55	-0.01	40.3	40.4	40.4	40.4	231.20	233.48	12:54:08
88.9	87.9	89.1	89.3	87.4	89.1	89.1	87.3	88.8	88.6	88.6	88.4	88.55	-0.01	40.3	40.4	40.4	40.3	230.56	232.75	12:55:08
88.9	87.9	89.1	89.3	87.3	89.1	89.1	87.3	88.8	88.6	88.6	88.4	88.55	-0.01	40.3	40.5	40.5	40.4	231.20	233.52	12:56:08
88.9	87.9	89.1	89.3	87.3	89.1	89.1	87.3	88.8	88.6	88.6	88.4	88.54	-0.01	40.2	40.4	40.4	40.3	231.12	233.31	12:57:08
89.0	87.9	89.1	89.3	87.3	89.1	89.1	87.3	88.8	88.6	88.6	88.4	88.55	-0.01	40.3	40.5	40.4	40.4	231.36	233.64	12:58:08
89.0	87.9	89.1	89.3	87.3	89.1	89.1	87.3	88.8	88.7	88.6	88.4	88.55	-0.01	40.3	40.4	40.5	40.4	231.04	233.38	12:59:08
88.9	87.9	89.1	89.3	87.3	89.1	89.1	87.3	88.8	88.6	88.6	88.4	88.54	-0.01	40.3	40.4	40.5	40.4	231.20	233.48	13:00:08
89.0	87.9	89.1	89.3	87.3	89.1	89.1	87.3	88.8	88.6	88.6	88.4	88.54	-0.01	40.3	40.5	40.4	40.4	230.88	233.18	13:01:08
88.9	87.9	89.1	89.3	87.3	89.1	89.1	87.3	88.8	88.6	88.6	88.4	88.54	-0.01	40.3	40.3	40.4	40.3	232.32	234.48	13:02:08
89.0	87.9	89.1	89.3	87.4	89.1	89.1	87.3	88.8	88.6	88.6	88.4	88.55	-0.01	40.3	40.4	40.3	40.3	231.52	233.63	13:03:08
89.0	87.9	89.1	89.3	87.3	89.1	89.1	87.3	88.8	88.7	88.6	88.4	88.55	-0.01	40.3	40.4	40.3	40.3	231.44	233.60	13:04:08
88.9	87.9	89.1	89.3	87.4	89.1	89.1	87.3	88.8	88.7	88.6	88.4	88.55	-0.01	40.3	40.4	40.4	40.3	231.44	233.59	13:05:08
89.0	87.9	89.1	89.3	87.4	89.1	89.1	87.3	88.8	88.7	88.6	88.4	88.56	-0.00	40.3	40.5	40.4	40.4	232.00	234.33	13:06:08
88.9	87.9	89.1	89.3	87.3	89.1	89.1	87.3	88.8	88.6	88.6	88.4	88.54	-0.01	40.3	40.5	40.5	40.4	229.20	231.55	13:07:08
89.0	87.9	89.1	89.3	87.3	89.1	89.1	87.3	88.8	88.6	88.6	88.4	88.53	-0.01	40.3	40.5	40.4	40.4	231.04	233.34	13:08:08
89.0	87.9	89.1	89.3	87.3	89.1	89.1	87.3	88.8	88.6	88.6	88.4	88.54	-0.01	40.3	40.4	40.5	40.4	230.64	232.91	13:09:08
89.0	87.9	89.1	89.3	87.3	89.1	89.1	87.3	88.8	88.7	88.6	88.4	88.55	-0.01	40.3	40.4	40.4	40.4	231.20	233.41	13:10:08
89.0	87.9	89.1	89.3	87.3	89.1	89.1	87.3	88.8	88.6	88.6	88.4	88.55	-0.01	40.3	40.4	40.4	40.3	231.20	233.39	13:11:08
88.9	87.9	89.1	89.3	87.3	89.1	89.1	87.3	88.8	88.6	88.6	88.4	88.54	-0.01	40.3	40.5	40.4	40.4	231.36	233.67	13:12:08
88.9	87.9	89.1	89.3	87.3	89.1	89.1	87.3	88.8	88.6	88.6	88.4	88.54	-0.01	40.3	40.4	40.4	40.4	230.40	232.61	13:13:08
88.9	87.9	89.1	89.3	87.3	89.1	89.1	87.3	88.8	88.6	88.6	88.4	88.54	-0.01	40.3	40.4	40.4	40.4	231.28	233.51	13:14:08
88.9	87.9	89.1	89.3	87.3	89.1	89.1	87.3	88.8	88.6	88.6	88.4	88.55	-0.01	40.3	40.4	40.5	40.4	230.40	232.61	13:15:08
88.9	87.9	89.1	89.3	87.3	89.1	89.1	87.3	88.8	88.6	88.6	88.4	88.53	-0.01	40.3	40.4	40.5	40.4	231.60	233.86	13:16:08
88.9	87.9	89.1	89.3	87.3	89.1	89.1	87.3	88.8	88.6	88.6	88.4	88.53	-0.01	40.3	40.3	40.4	40.3	231.44	233.61	13:17:08
88.9	87.9	89.1	89.3	87.3	89.1	89.1	87.3	88.8	88.6	88.6	88.4	88.53	-0.01	40.3	40.4	40.4	40.3	232.00	234.18	13:18:08
88.9	87.9	89.1	89.3	87.3	89.1	89.1	87.3	88.8	88.6	88.6	88.4	88.54	-0.01	40.3	40.3	40.4	40.3	231.60	233.79	13:19:08
89.0	87.9	89.1	89.3	87.3	89.1	89.1	87.3	88.8	88.6	88.6	88.4	88.53	-0.01	40.3	40.3	40.5	40.4	231.12	233.37	13:20:08
89.0	87.9	89.1	89.3	87.3	89.1	89.1	87.3	88.8	88.6	88.6	88.4	88.54	-0.01	40.3	40.4	40.5	40.4	231.04	233.34	13:21:08
88.9	87.9	89.1	89.3	87.3	89.1	89.1	87.3	88.8	88.6	88.6	88.4	88.54	-0.01	40.3	40.3	40.5	40.4	231.44	233.69	13:22:08
88.9	87.9	89.1	89.3	87.3	89.1	89.1	87.3	88.8	88.6	88.6	88.4	88.53	-0.01	40.3	40.4	40.4	40.4	231.36	233.70	13:23:08
89.0	87.9	89.1	89.3	87.3	89.1	89.1	87.3	88.8	88.6	88.6	88.4	88.54	-0.01	40.3	40.4	40.5	40.4	232.08	234.38	13:24:08
88.9	87.9	89.1	89.3	87.3	89.1	89.1	87.3	88.8	88.6	88.6	88.4	88.53	-0.01	40.3	40.4	40.5	40.4	231.60	233.87	13:25:08
89.0	87.9	89.1	89.3	87.3	89.1	89.2	87.3	88.8	88.7	88.6	88.4	88.55	-0.01	40.3	40.5	40.5	40.4	231.60	233.99	13:26:08
88.9	87.9	89.1	89.3	87.3	89.1	89.1	87.3	88.8	88.6	88.6	88.4	88.53	-0.01	40.4	40.5	40.4	40.4	231.52	233.87	13:27:08
88.9	87.9	89.1	89.3	87.3	89.1	89.1	87.3	88.8	88.6	88.6	88.4	88.53	-0.01	40.3	40.5	40.5	40.4	231.60	233.95	13:28:08
89.0	87.9	89.1	89.3	87.3	89.1	89.1	87.3	88.8	88.6	88.6	88.4	88.55	-0.01	40.4	40.5	40.5	40.4	231.36	233.73	13:29:08
88.9	87.8	89.1	89.3	87.3	89.1	89.1	87.2	88.8	88.6	88.6	88.4	88.52	-0.01	40.3	40.3	40.5	40.3	231.84	234.04	13:30:08
89.0	87.9	89.1	89.3	87.3	89.1	89.1	87.3	88.8	88.6	88.6	88.4	88.54	-0.01	40.4	40.4	40.5	40.4	232.00	234.35	13:31:08
88.9	87.8	89.1	89.3	87.3	89.1	89.1	87.3	88.8	88.6	88.6	88.4	88.52	-0.02	40.3	40.3	40.4	40.3	231.20	233.43	13:32:08
88.9	87.8	89.1	89.3	87.3	89.1	89.1	87.3	88.8	88.6	88.6	88.4	88.53	-0.02	40.3	40.4	40.4	40.4	231.60	233.88	13:33:08
89.0	87.9	89.1	89.3	87.3	89.1	89.1	87.3	88.8	88.6	88.6	88.4	88.54	-0.02	40.3	40.4	40.3	40.3	231.60	233.73	13:34:08

COMMENTS 3 CONDUCTOR - 750KCMIL - 4" CONDUIT

Tested By Frank A. Dewey Date 3-17-93 Reviewed By C. Lutledge Date 3-17-93

POSITION 1			POSITION 2			POSITION 3			POSITION AVERAGE			AVE		AMBIENT TEMPERATURE				AMPS		
Trd1	Tbk1	Twh1	Trd2	Tbk2	Twh2	Trd3	Tbk3	Twh3	Tav1	Tav2	Tav3	Twave	SLOPE	Tam1	Tam2	Tam3	Taav	It	I'	TIME
88.9	87.8	89.1	89.3	87.3	89.1	89.1	87.2	88.8	88.6	88.6	88.4	88.52	-0.02	40.3	40.3	40.5	40.4	229.92	232.19	13:35:08
88.9	87.8	89.1	89.3	87.3	89.1	89.1	87.3	88.8	88.6	88.6	88.4	88.52	-0.02	40.3	40.5	40.4	40.4	231.36	233.69	13:36:08
88.9	87.8	89.1	89.3	87.3	89.1	89.1	87.2	88.8	88.6	88.5	88.4	88.51	-0.02	40.3	40.4	40.4	40.4	231.84	234.16	13:37:08
88.9	87.8	89.1	89.3	87.3	89.1	89.1	87.3	88.8	88.6	88.6	88.4	88.53	-0.02	40.3	40.3	40.4	40.3	231.12	233.31	13:38:08
88.9	87.9	89.1	89.3	87.3	89.1	89.1	87.2	88.8	88.6	88.6	88.4	88.53	-0.02	40.3	40.4	40.5	40.4	231.36	233.63	13:39:08
88.9	87.8	89.1	89.3	87.3	89.1	89.1	87.3	88.8	88.6	88.6	88.4	88.53	-0.03	40.3	40.3	40.5	40.4	231.12	233.41	13:40:08
89.0	87.9	89.1	89.3	87.3	89.1	89.1	87.3	88.8	88.6	88.6	88.4	88.54	-0.02	40.3	40.3	40.5	40.4	231.04	233.32	13:41:08
88.9	87.8	89.1	89.3	87.3	89.1	89.1	87.3	88.8	88.6	88.6	88.4	88.53	-0.02	40.3	40.4	40.4	40.4	231.52	233.75	13:42:08
88.9	87.8	89.1	89.3	87.3	89.1	89.1	87.2	88.8	88.6	88.6	88.4	88.51	-0.03	40.3	40.4	40.4	40.4	231.12	233.45	13:43:08
88.9	87.8	89.1	89.3	87.3	89.1	89.1	87.2	88.8	88.6	88.6	88.4	88.51	-0.03	40.4	40.4	40.4	40.4	230.80	233.09	13:44:08
88.9	87.8	89.1	89.3	87.3	89.1	89.1	87.2	88.8	88.6	88.6	88.4	88.52	-0.03	40.3	40.4	40.4	40.4	231.36	233.66	13:45:08
88.9	87.8	89.1	89.3	87.3	89.1	89.1	87.2	88.8	88.6	88.6	88.4	88.51	-0.03	40.3	40.5	40.4	40.4	231.52	233.89	13:46:08
88.9	87.8	89.1	89.3	87.3	89.1	89.1	87.3	88.8	88.6	88.6	88.4	88.52	-0.03	40.3	40.4	40.4	40.4	231.68	233.91	13:47:08
88.9	87.9	89.1	89.3	87.3	89.1	89.1	87.2	88.8	88.6	88.6	88.4	88.53	-0.03	40.3	40.5	40.5	40.4	231.60	233.94	13:48:08
88.9	87.8	89.1	89.3	87.3	89.1	89.1	87.2	88.8	88.6	88.6	88.4	88.51	-0.03	40.3	40.4	40.5	40.4	232.16	234.49	13:49:08
88.9	87.8	89.1	89.3	87.3	89.1	89.1	87.2	88.8	88.6	88.6	88.4	88.51	-0.03	40.3	40.5	40.4	40.4	231.60	233.89	13:50:08
88.9	87.8	89.1	89.3	87.3	89.1	89.1	87.2	88.8	88.6	88.6	88.4	88.51	-0.04	40.3	40.3	40.4	40.4	231.84	234.08	13:51:08
88.9	87.8	89.1	89.3	87.3	89.1	89.1	87.2	88.8	88.6	88.6	88.4	88.52	-0.04	40.3	40.5	40.5	40.5	231.60	234.08	13:52:08
88.9	87.8	89.1	89.3	87.3	89.1	89.1	87.2	88.8	88.6	88.6	88.4	88.52	-0.04	40.3	40.4	40.5	40.4	232.00	234.35	13:53:08
89.0	87.8	89.1	89.3	87.3	89.1	89.1	87.3	88.8	88.6	88.6	88.4	88.53	-0.04	40.3	40.4	40.5	40.4	231.36	233.68	13:54:08
88.9	87.9	89.1	89.3	87.3	89.1	89.1	87.3	88.8	88.6	88.6	88.4	88.53	-0.03	40.3	40.4	40.3	40.3	232.00	234.19	13:55:08
88.9	87.8	89.1	89.3	87.3	89.1	89.1	87.3	88.8	88.6	88.6	88.4	88.52	-0.03	40.3	40.4	40.4	40.4	231.84	234.16	13:56:08
88.9	87.8	89.1	89.3	87.3	89.1	89.1	87.2	88.8	88.6	88.5	88.4	88.51	-0.04	40.3	40.4	40.5	40.4	231.84	234.20	13:57:08
88.9	87.8	89.1	89.3	87.3	89.1	89.1	87.2	88.8	88.6	88.6	88.4	88.51	-0.04	40.3	40.4	40.5	40.4	232.16	234.46	13:58:08
88.9	87.8	89.1	89.3	87.3	89.1	89.1	87.2	88.8	88.6	88.5	88.4	88.50	-0.04	40.3	40.5	40.5	40.4	231.84	234.31	13:59:08
88.9	87.8	89.1	89.3	87.3	89.1	89.1	87.2	88.8	88.6	88.6	88.4	88.52	-0.04	40.3	40.4	40.4	40.4	231.60	233.92	14:00:08
88.9	87.8	89.1	89.3	87.3	89.1	89.1	87.3	88.8	88.6	88.6	88.4	88.53	-0.04	40.4	40.3	40.4	40.3	231.84	234.02	14:01:08
88.9	87.8	89.1	89.3	87.3	89.1	89.1	87.2	88.8	88.6	88.6	88.4	88.51	-0.04	40.3	40.4	40.5	40.4	232.40	234.73	14:02:08
88.9	87.8	89.1	89.3	87.3	89.1	89.1	87.2	88.8	88.6	88.5	88.4	88.51	-0.04	40.3	40.5	40.5	40.4	231.68	234.10	14:03:08
88.9	87.8	89.1	89.3	87.3	89.1	89.1	87.3	88.8	88.6	88.6	88.4	88.52	-0.04	40.3	40.4	40.5	40.4	232.24	234.62	14:04:08
88.9	87.8	89.1	89.3	87.3	89.1	89.1	87.3	88.8	88.6	88.6	88.4	88.52	-0.03	40.3	40.5	40.5	40.4	232.48	234.90	14:05:08
89.0	87.8	89.1	89.3	87.3	89.1	89.1	87.3	88.8	88.6	88.6	88.4	88.52	-0.03	40.3	40.5	40.4	40.4	232.00	234.29	14:06:08
88.9	87.8	89.1	89.3	87.3	89.1	89.1	87.2	88.8	88.6	88.5	88.4	88.50	-0.03	40.3	40.4	40.5	40.4	231.84	234.29	14:07:08
88.9	87.8	89.1	89.3	87.3	89.1	89.1	87.2	88.8	88.6	88.6	88.4	88.51	-0.03	40.3	40.5	40.5	40.4	232.00	234.44	14:08:08
88.9	87.8	89.1	89.3	87.3	89.1	89.1	87.2	88.8	88.6	88.6	88.4	88.52	-0.03	40.4	40.5	40.4	40.4	231.76	234.15	14:09:08
88.9	87.8	89.1	89.3	87.3	89.1	89.1	87.2	88.8	88.6	88.5	88.4	88.51	-0.03	40.3	40.5	40.5	40.4	231.84	234.35	14:10:08
88.9	87.8	89.1	89.3	87.3	89.1	89.1	87.2	88.8	88.6	88.6	88.4	88.52	-0.03	40.3	40.4	40.5	40.4	231.84	234.12	14:11:08
88.9	87.8	89.1	89.3	87.3	89.1	89.1	87.2	88.8	88.6	88.6	88.4	88.52	-0.03	40.3	40.4	40.5	40.4	231.28	233.59	14:12:08
88.9	87.8	89.1	89.3	87.3	89.1	89.1	87.2	88.8	88.6	88.5	88.4	88.50	-0.03	40.3	40.3	40.5	40.4	231.60	233.98	14:13:08
88.9	87.8	89.0	89.3	87.3	89.0	89.0	87.2	88.8	88.6	88.5	88.3	88.48	-0.03	40.4	40.4	40.5	40.4	231.68	234.22	14:14:08
88.9	87.8	89.1	89.3	87.3	89.1	89.1	87.2	88.8	88.6	88.6	88.4	88.51	-0.03	40.4	40.4	40.4	40.4	231.84	234.20	14:15:08
88.9	87.8	89.1	89.3	87.3	89.1	89.1	87.2	88.8	88.6	88.5	88.4	88.50	-0.03	40.4	40.3	40.5	40.4	232.40	234.84	14:16:08
88.9	87.8	89.1	89.3	87.3	89.1	89.1	87.2	88.8	88.6	88.5	88.3	88.49	-0.03	40.4	40.4	40.5	40.4	231.60	234.01	14:17:08
88.9	87.8	89.1	89.3	87.3	89.1	89.1	87.2	88.8	88.6	88.6	88.4	88.52	-0.03	40.3	40.4	40.5	40.4	231.76	234.12	14:18:08
88.9	87.8	89.1	89.3	87.3	89.1	89.1	87.2	88.8	88.6	88.5	88.4	88.50	-0.03	40.4	40.3	40.5	40.4	232.08	234.50	14:19:08
88.9	87.8	89.1	89.3	87.3	89.1	89.1	87.2	88.8	88.6	88.5	88.4	88.50	-0.03	40.4	40.4	40.5	40.5	231.84	234.34	14:20:08
88.9	87.8	89.1	89.3	87.3	89.1	89.1	87.2	88.8	88.6	88.5	88.4	88.49	-0.03	40.4	40.5	40.5	40.5	232.00	234.56	14:21:08
88.9	87.8	89.1	89.3	87.3	89.1	89.1	87.2	88.8	88.6	88.5	88.3	88.49	-0.03	40.4	40.5	40.5	40.5	232.00	234.52	14:22:08
88.9	87.8	89.1	89.3	87.3	89.1	89.1	87.2	88.8	88.6	88.6	88.4	88.52	-0.03	40.3	40.5	40.5	40.4	232.72	235.08	14:23:08
88.9	87.8	89.1	89.3	87.3	89.1	89.1	87.2	88.8	88.6	88.6	88.4	88.51	-0.03	40.3	40.4	40.4	40.4	232.32	234.61	14:24:08
88.9	87.8	89.1	89.3	87.3	89.1	89.1	87.2	88.8	88.6	88.5	88.3	88.49	-0.03	40.4	40.5	40.5	40.5	232.80	235.33	14:25:08
88.9	87.8	89.1	89.3	87.3	89.1	89.1	87.2	88.8	88.6	88.5	88.4	88.50	-0.03	40.3	40.4	40.4	40.4	231.84	234.12	14:26:08
88.9	87.8	89.1	89.3	87.3	89.1	89.1	87.2	88.8	88.6	88.6	88.4	88.52	-0.03	40.3	40.4	40.3	40.4	231.68	233.94	14:27:08
88.9	87.8	89.1	89.3	87.3	89.1	89.1	87.2	88.8	88.6	88.5	88.4	88.51	-0.03	40.3	40.4	40.5	40.4	231.84	234.17	14:28:08
88.9	87.8	89.1	89.3	87.3	89.1	89.1	87.2	88.8	88.6	88.6	88.4	88.51	-0.03	40.3	40.3	40.4	40.3	232.72	234.97	14:29:08
88.9	87.9	89.1	89.3	87.3	89.1	89.1	87.3	88.8	88.6	88.6	88.4	88.52	-0.02	40.3	40.4	40.4	40.4	232.00	234.27	14:30:08
88.9	87.8	89.1	89.3	87.3	89.1	89.1	87.2	88.8	88.6	88.6	88.4	88.51	-0.02	40.3	40.3	40.4	40.3	232.48	234.63	14:31:08
88.9	87.8	89.1	89.3	87.3	89.1	89.1	87.2	88.8	88.6	88.5	88.4	88.50	-0.02	40.3	40.4	40.4	40.3	231.60	233.91	14:32:08
88.9	87.8	89.1	89.3	87.3	89.1	89.1	87.2	88.8	88.6	88.6	88.4	88.51	-0.02	40.3	40.4	40.3	40.3	231.20	233.36	14:33:08
88.9	87.8	89.1	89.3	87.3	89.1	89.1	87.2	88.8	88.6	88.5	88.3	88.49	-0.02	40.3	40.3	40.3	40.3	231.60	233.85	14:34:08

COMMENTS _____

Tested By Frank A. Dewey Date 3-17-93 Reviewed By C L Rutledge Date 3-17-93

POSITION 1			POSITION 2			POSITION 3			POSITION AVERAGE			AVE		AMBIENT TEMPERATURE				AMPS		
Trd1	Tbk1	Twh1	Trd2	Tbk2	Twh2	Trd3	Tbk3	Twh3	Tav1	Tav2	Tav3	Twave	SLOPE	Tam1	Tam2	Tam3	Taav	It	I'	TIME
88.9	87.8	89.1	89.3	87.3	89.1	89.1	87.3	88.8	88.6	88.5	88.4	88.51	-0.02	40.3	40.3	40.3	40.3	231.84	234.01	14:35:08
88.9	87.8	89.1	89.3	87.3	89.1	89.1	87.2	88.8	88.6	88.5	88.3	88.49	-0.02	40.2	40.3	40.4	40.3	232.08	234.29	14:36:08
88.9	87.8	89.1	89.3	87.3	89.1	89.1	87.2	88.8	88.6	88.6	88.4	88.52	-0.02	40.2	40.3	40.5	40.4	232.48	234.71	14:37:08
88.9	87.8	89.1	89.3	87.3	89.1	89.1	87.2	88.8	88.6	88.6	88.4	88.51	-0.02	40.2	40.4	40.4	40.3	232.00	234.21	14:38:08
88.9	87.8	89.1	89.3	87.3	89.1	89.1	87.3	88.8	88.6	88.6	88.4	88.52	-0.02	40.3	40.3	40.4	40.3	232.56	234.79	14:39:08
88.9	87.8	89.1	89.3	87.3	89.1	89.1	87.2	88.8	88.6	88.6	88.4	88.51	-0.02	40.2	40.3	40.3	40.3	232.40	234.49	14:40:08
88.9	87.8	89.1	89.3	87.3	89.1	89.1	87.2	88.8	88.6	88.6	88.4	88.52	-0.01	40.2	40.4	40.3	40.3	232.24	234.44	14:41:08
88.9	87.8	89.1	89.3	87.3	89.1	89.1	87.2	88.8	88.6	88.6	88.4	88.51	-0.01	40.3	40.5	40.3	40.4	232.16	234.45	14:42:08
88.9	87.9	89.1	89.3	87.3	89.1	89.1	87.3	88.8	88.6	88.6	88.4	88.54	-0.01	40.3	40.3	40.3	40.3	231.84	233.93	14:43:08
88.9	87.9	89.1	89.3	87.3	89.1	89.1	87.3	88.8	88.6	88.6	88.4	88.54	-0.01	40.3	40.3	40.4	40.3	231.04	233.20	14:44:08
88.9	87.9	89.1	89.3	87.3	89.1	89.1	87.3	88.8	88.6	88.6	88.4	88.53	-0.00	40.3	40.3	40.4	40.3	232.48	234.68	14:45:08
88.9	87.8	89.1	89.3	87.3	89.1	89.1	87.3	88.8	88.6	88.6	88.4	88.53	-0.00	40.3	40.4	40.4	40.4	232.32	234.55	14:46:08
88.9	87.8	89.1	89.3	87.3	89.1	89.1	87.2	88.8	88.6	88.5	88.4	88.50	-0.00	40.3	40.3	40.4	40.3	232.00	234.19	14:47:08
88.9	87.8	89.1	89.3	87.3	89.1	89.1	87.3	88.8	88.6	88.6	88.4	88.52	0.00	40.3	40.3	40.4	40.3	231.84	234.01	14:48:08
88.9	87.9	89.1	89.3	87.3	89.1	89.1	87.3	88.8	88.6	88.6	88.4	88.53	0.00	40.3	40.3	40.3	40.3	231.68	233.79	14:49:08
88.9	87.9	89.1	89.3	87.3	89.1	89.1	87.3	88.8	88.6	88.6	88.4	88.53	0.00	40.2	40.4	40.4	40.3	232.40	234.62	14:50:08
88.9	87.9	89.1	89.3	87.3	89.1	89.1	87.3	88.8	88.6	88.6	88.4	88.53	0.00	40.3	40.4	40.4	40.4	232.16	234.41	14:51:08
88.9	87.8	89.1	89.3	87.3	89.1	89.1	87.3	88.8	88.6	88.6	88.4	88.53	0.01	40.3	40.4	40.5	40.4	232.08	234.42	14:52:08
89.0	87.9	89.1	89.3	87.3	89.1	89.1	87.3	88.8	88.6	88.6	88.4	88.54	0.01	40.3	40.4	40.4	40.4	232.08	234.30	14:53:08
88.9	87.9	89.1	89.3	87.3	89.1	89.1	87.3	88.8	88.6	88.6	88.4	88.53	0.01	40.3	40.4	40.5	40.4	231.36	233.67	14:54:08
88.9	87.9	89.1	89.3	87.3	89.1	89.1	87.3	88.8	88.6	88.6	88.4	88.53	0.02	40.3	40.4	40.4	40.4	231.68	233.91	14:55:08
88.9	87.9	89.1	89.3	87.3	89.1	89.1	87.3	88.8	88.6	88.6	88.4	88.53	0.02	40.3	40.5	40.5	40.4	231.60	233.97	14:56:08
88.9	87.9	89.1	89.3	87.3	89.1	89.1	87.3	88.8	88.6	88.6	88.4	88.53	0.02	40.3	40.5	40.5	40.4	231.84	234.30	14:57:08
88.9	87.8	89.1	89.3	87.3	89.1	89.1	87.2	88.8	88.6	88.6	88.4	88.51	0.02	40.3	40.4	40.5	40.4	232.48	234.85	14:58:08
88.9	87.8	89.1	89.3	87.3	89.1	89.1	87.3	88.8	88.6	88.6	88.4	88.52	0.02	40.3	40.5	40.5	40.4	232.00	234.41	14:59:08
88.9	87.8	89.1	89.3	87.3	89.1	89.1	87.3	88.8	88.6	88.6	88.4	88.53	0.02	40.3	40.5	40.5	40.4	232.72	235.09	15:00:08
88.9	87.9	89.1	89.3	87.3	89.1	89.1	87.3	88.8	88.6	88.6	88.4	88.53	0.02	40.3	40.5	40.4	40.4	232.48	234.76	15:01:08
88.9	87.8	89.1	89.3	87.3	89.1	89.1	87.3	88.8	88.6	88.6	88.4	88.53	0.02	40.3	40.5	40.5	40.5	232.40	234.88	15:02:08
88.9	87.9	89.1	89.3	87.3	89.1	89.1	87.3	88.8	88.6	88.6	88.4	88.53	0.03	40.3	40.5	40.4	40.4	231.84	234.23	15:03:08
89.0	87.9	89.1	89.3	87.3	89.1	89.1	87.3	88.8	88.6	88.6	88.4	88.54	0.03	40.3	40.5	40.5	40.4	231.20	233.59	15:04:08
89.0	87.9	89.1	89.3	87.3	89.1	89.1	87.3	88.8	88.6	88.6	88.4	88.53	0.03	40.4	40.4	40.4	40.4	232.48	234.83	15:05:08
89.0	87.9	89.1	89.3	87.3	89.1	89.1	87.3	88.8	88.6	88.6	88.4	88.54	0.03	40.3	40.5	40.5	40.4	232.24	234.60	15:06:08
88.9	87.8	89.1	89.3	87.3	89.1	89.1	87.3	88.8	88.6	88.6	88.4	88.53	0.03	40.3	40.4	40.5	40.4	232.48	234.86	15:07:08
89.0	87.9	89.1	89.3	87.3	89.1	89.1	87.3	88.8	88.6	88.6	88.4	88.54	0.04	40.3	40.5	40.5	40.4	232.96	235.33	15:08:08
89.0	87.9	89.1	89.3	87.3	89.1	89.1	87.3	88.8	88.6	88.6	88.4	88.54	0.04	40.3	40.5	40.5	40.4	232.24	234.58	15:09:08
89.0	87.9	89.1	89.3	87.3	89.1	89.1	87.3	88.8	88.6	88.6	88.4	88.54	0.04	40.3	40.4	40.4	40.4	231.60	233.82	15:10:08
89.0	87.9	89.1	89.3	87.3	89.1	89.1	87.3	88.8	88.6	88.6	88.4	88.54	0.04	40.3	40.5	40.5	40.4	231.36	233.71	15:11:08
89.0	87.9	89.1	89.3	87.3	89.1	89.1	87.3	88.8	88.6	88.6	88.4	88.54	0.05	40.4	40.5	40.5	40.4	231.84	234.21	15:12:08
88.9	87.9	89.1	89.3	87.3	89.1	89.1	87.3	88.8	88.6	88.6	88.4	88.53	0.05	40.4	40.4	40.5	40.4	231.84	234.28	15:13:08
88.9	87.9	89.1	89.3	87.3	89.1	89.1	87.3	88.8	88.6	88.6	88.4	88.54	0.04	40.4	40.5	40.5	40.5	232.00	234.40	15:14:08
89.0	87.9	89.1	89.3	87.3	89.1	89.1	87.3	88.8	88.7	88.6	88.4	88.56	0.05	40.3	40.4	40.5	40.4	231.36	233.74	15:15:08
89.0	87.9	89.1	89.3	87.3	89.1	89.1	87.3	88.8	88.6	88.6	88.4	88.55	0.05	40.3	40.5	40.6	40.5	231.04	233.58	15:16:08
88.9	87.9	89.1	89.3	87.3	89.1	89.1	87.3	88.8	88.6	88.6	88.4	88.54	0.04	40.4	40.5	40.5	40.5	231.44	233.88	15:17:08
89.0	87.9	89.1	89.3	87.3	89.1	89.1	87.3	88.8	88.6	88.6	88.4	88.54	0.05	40.4	40.5	40.5	40.5	231.92	234.38	15:18:08
89.0	87.9	89.1	89.3	87.3	89.1	89.1	87.3	88.8	88.7	88.6	88.4	88.55	0.05	40.3	40.5	40.6	40.5	231.36	233.86	15:19:08
89.0	87.9	89.1	89.3	87.3	89.1	89.1	87.3	88.8	88.6	88.6	88.4	88.54	0.05	40.3	40.5	40.5	40.4	231.60	233.94	15:20:08
89.0	87.9	89.1	89.3	87.3	89.1	89.1	87.3	88.8	88.7	88.6	88.4	88.56	0.05	40.3	40.4	40.4	40.4	231.52	233.73	15:21:08
88.9	87.9	89.1	89.3	87.3	89.1	89.1	87.3	88.8	88.6	88.6	88.4	88.55	0.05	40.3	40.5	40.5	40.4	231.60	233.97	15:22:08
89.0	87.9	89.1	89.3	87.3	89.1	89.1	87.3	88.8	88.7	88.6	88.4	88.56	0.05	40.4	40.5	40.5	40.5	231.20	233.61	15:23:08
89.0	87.9	89.1	89.3	87.4	89.1	89.2	87.3	88.8	88.7	88.6	88.4	88.56	0.05	40.4	40.4	40.5	40.4	231.52	233.82	15:24:08
89.0	87.9	89.1	89.3	87.3	89.1	89.1	87.3	88.8	88.7	88.6	88.4	88.55	0.05	40.4	40.5	40.5	40.4	230.56	232.91	15:25:08
89.0	87.9	89.1	89.3	87.3	89.1	89.1	87.3	88.8	88.7	88.6	88.4	88.55	0.05	40.4	40.5	40.5	40.4	231.60	233.94	15:26:08
88.9	87.9	89.1	89.3	87.3	89.1	89.1	87.3	88.8	88.6	88.6	88.4	88.54	0.05	40.3	40.5	40.5	40.4	231.36	233.78	15:27:08
88.9	87.9	89.1	89.3	87.3	89.1	89.1	87.3	88.8	88.6	88.6	88.4	88.54	0.05	40.4	40.5	40.5	40.5	231.36	233.85	15:28:08
89.0	87.9	89.1	89.3	87.3	89.1	89.1	87.3	88.8	88.7	88.6	88.4	88.55	0.05	40.4	40.4	40.5	40.4	231.60	234.01	15:29:08
89.0	87.9	89.1	89.3	87.3	89.1	89.1	87.3	88.8	88.6	88.6	88.4	88.54	0.05	40.4	40.5	40.6	40.5	231.36	233.89	15:30:08
89.0	87.9	89.1	89.3	87.3	89.1	89.1	87.3	88.8	88.7	88.6	88.4	88.55	0.05	40.4	40.5	40.5	40.4	231.12	233.52	15:31:08
89.0	87.9	89.1	89.3	87.3	89.1	89.1	87.3	88.8	88.6	88.6	88.4	88.55	0.04	40.3	40.5	40.5	40.4	231.60	233.94	15:32:08
89.0	87.9	89.1	89.3	87.3	89.1	89.1	87.3	88.8	88.7	88.6	88.4	88.56	0.04	40.4	40.5	40.5	40.5	230.88	233.28	15:33:08
89.0	87.9	89.1	89.3	87.3	89.1	89.1	87.3	88.8	88.6	88.6	88.4	88.54	0.04	40.5	40.5	40.4	40.4	230.48	232.89	15:34:08

COMMENTS _____

Tested By Frank A. Denney Date 3-17-93 Reviewed By C.L. Rutledge Date 3-17-93

AMPACITY TEST. JOB NUMBER 93-0501. SAMPLE NUMBER 93-0501-05 DATA FILE ITEM05NO.004 03-11-1993 E-13

POSITION 1			POSITION 2			POSITION 3			POSITION AVERAGE			AVE		AMBIENT TEMPERATURE				AMPS		
Trd1	Tbk1	Twh1	Trd2	Tbk2	Twh2	Trd3	Tbk3	Twh3	Tav1	Tav2	Tav3	Twave	SLOPE	Tam1	Tam2	Tam3	Taav	It	I'	TIME
88.5	89.8	89.7	90.2	90.5	90.4	90.2	89.9	90.5	89.3	90.3	90.2	89.96	-0.00	39.8	40.1	40.1	40.0	52.88	52.67	09:05:09
88.5	89.8	89.7	90.2	90.5	90.4	90.2	89.9	90.5	89.3	90.4	90.2	89.96	-0.00	39.8	40.2	40.1	40.0	52.80	52.59	09:06:09
88.5	89.8	89.7	90.2	90.5	90.4	90.2	89.9	90.5	89.3	90.4	90.2	89.97	-0.00	39.9	40.1	40.1	40.0	52.92	52.72	09:07:09
88.5	89.8	89.7	90.2	90.5	90.4	90.2	89.9	90.5	89.3	90.4	90.2	89.97	-0.00	39.9	40.1	40.0	40.0	52.80	52.59	09:08:09
88.5	89.8	89.7	90.2	90.5	90.4	90.2	89.9	90.5	89.3	90.4	90.2	89.98	-0.00	39.9	40.2	40.1	40.1	53.00	52.80	09:09:09
88.5	89.8	89.7	90.2	90.5	90.4	90.2	89.9	90.5	89.4	90.4	90.2	89.99	0.00	39.9	40.1	40.1	40.0	53.04	52.83	09:10:09
88.5	89.8	89.7	90.3	90.5	90.4	90.2	89.9	90.6	89.4	90.4	90.2	89.99	0.00	39.8	40.1	40.1	40.0	52.92	52.69	09:11:09
88.5	89.8	89.7	90.2	90.5	90.4	90.2	89.9	90.5	89.3	90.4	90.2	89.97	0.00	39.9	40.2	40.1	40.0	52.96	52.76	09:12:09
88.5	89.8	89.7	90.2	90.5	90.4	90.2	89.9	90.5	89.4	90.4	90.2	89.99	0.00	39.9	40.1	40.1	40.0	52.96	52.75	09:13:09
88.5	89.9	89.7	90.3	90.5	90.4	90.3	89.9	90.6	89.4	90.4	90.2	90.00	0.01	39.9	40.2	40.1	40.0	53.04	52.82	09:14:09
88.5	89.9	89.7	90.3	90.5	90.4	90.2	89.9	90.6	89.4	90.4	90.2	90.00	0.01	40.0	40.2	40.1	40.1	53.00	52.82	09:15:09
88.6	89.9	89.7	90.3	90.6	90.4	90.3	89.9	90.6	89.4	90.4	90.3	90.01	0.01	39.9	40.2	40.1	40.1	53.04	52.84	09:16:09
88.6	89.9	89.7	90.3	90.6	90.4	90.3	89.9	90.6	89.4	90.4	90.2	90.02	0.02	40.0	40.1	40.2	40.1	52.92	52.72	09:17:09
88.5	89.8	89.7	90.3	90.5	90.4	90.2	89.9	90.6	89.4	90.4	90.2	90.00	0.02	40.0	40.1	40.2	40.1	52.68	52.50	09:18:09
88.6	89.9	89.7	90.3	90.6	90.4	90.2	89.9	90.6	89.4	90.4	90.2	90.01	0.02	40.0	40.1	40.2	40.1	52.80	52.61	09:19:09
88.5	89.8	89.7	90.3	90.5	90.4	90.2	89.9	90.5	89.4	90.4	90.2	89.99	0.02	39.9	40.2	40.1	40.1	52.96	52.76	09:20:09
88.6	89.9	89.7	90.3	90.5	90.4	90.2	89.9	90.5	89.4	90.4	90.2	90.00	0.03	40.0	40.1	40.1	40.1	52.96	52.76	09:21:09
88.5	89.9	89.7	90.3	90.5	90.4	90.2	89.9	90.5	89.4	90.4	90.2	90.00	0.03	39.9	40.3	40.2	40.1	52.96	52.78	09:22:09
88.6	89.9	89.7	90.3	90.6	90.5	90.3	90.0	90.6	89.4	90.4	90.3	90.05	0.04	39.9	40.2	40.2	40.1	52.96	52.75	09:23:09
88.6	89.9	89.7	90.3	90.6	90.4	90.3	90.0	90.6	89.4	90.4	90.3	90.04	0.04	40.0	40.2	40.2	40.1	53.04	52.83	09:24:09
88.6	89.9	89.7	90.3	90.6	90.4	90.3	90.0	90.6	89.4	90.4	90.3	90.04	0.05	39.9	40.1	40.2	40.1	53.00	52.77	09:25:09
88.6	89.9	89.7	90.3	90.6	90.5	90.3	90.0	90.6	89.4	90.5	90.3	90.05	0.05	40.0	40.2	40.2	40.1	53.04	52.85	09:26:09
88.6	89.9	89.8	90.3	90.6	90.5	90.3	90.0	90.6	89.4	90.5	90.3	90.08	0.06	39.9	40.2	40.2	40.1	53.08	52.85	09:27:09
88.6	89.9	89.8	90.3	90.6	90.5	90.3	90.0	90.6	89.5	90.5	90.3	90.10	0.07	40.0	40.2	40.2	40.1	53.04	52.83	09:28:09
88.6	89.9	89.8	90.3	90.6	90.5	90.3	90.0	90.6	89.5	90.5	90.3	90.09	0.08	40.0	40.2	40.2	40.1	52.92	52.70	09:29:09
88.6	89.9	89.8	90.4	90.6	90.5	90.3	90.0	90.6	89.5	90.5	90.3	90.10	0.09	40.0	40.2	40.2	40.1	52.96	52.74	09:30:09
88.6	90.0	89.8	90.4	90.7	90.5	90.3	90.0	90.7	89.5	90.5	90.3	90.10	0.10	40.0	40.3	40.2	40.1	52.96	52.74	09:31:09
88.7	90.0	89.8	90.4	90.7	90.5	90.3	90.0	90.7	89.5	90.5	90.3	90.11	0.11	40.0	40.3	40.3	40.2	52.84	52.64	09:32:09
88.6	89.9	89.8	90.4	90.6	90.5	90.3	90.0	90.7	89.5	90.5	90.3	90.10	0.12	40.1	40.2	40.3	40.2	52.84	52.65	09:33:09
88.7	90.0	89.8	90.4	90.7	90.5	90.3	90.0	90.7	89.5	90.5	90.3	90.11	0.13	40.0	40.2	40.2	40.2	52.72	52.52	09:34:09
88.7	89.9	89.8	90.4	90.7	90.5	90.3	90.0	90.7	89.5	90.5	90.3	90.10	0.13	40.0	40.2	40.3	40.2	52.88	52.68	09:35:09
88.7	90.0	89.8	90.4	90.6	90.5	90.3	90.0	90.6	89.5	90.5	90.3	90.10	0.14	40.0	40.2	40.3	40.2	52.84	52.65	09:36:09
88.6	90.0	89.8	90.4	90.6	90.5	90.3	90.0	90.6	89.5	90.5	90.3	90.10	0.15	40.0	40.2	40.3	40.2	52.80	52.61	09:37:09
88.6	89.9	89.8	90.3	90.6	90.5	90.3	90.0	90.6	89.5	90.5	90.3	90.10	0.15	40.0	40.4	40.3	40.2	52.68	52.52	09:38:09
88.6	89.9	89.8	90.3	90.6	90.5	90.3	90.0	90.6	89.4	90.5	90.3	90.08	0.16	40.0	40.3	40.3	40.2	52.68	52.51	09:39:09
88.6	89.9	89.8	90.3	90.6	90.5	90.3	90.0	90.6	89.4	90.5	90.3	90.07	0.16	40.0	40.4	40.3	40.2	52.68	52.53	09:40:09
88.6	89.9	89.8	90.3	90.6	90.5	90.3	90.0	90.6	89.5	90.5	90.3	90.08	0.16	40.1	40.3	40.2	40.2	52.68	52.51	09:41:09
88.6	89.9	89.8	90.3	90.6	90.5	90.3	90.0	90.6	89.4	90.5	90.3	90.08	0.16	40.0	40.3	40.3	40.2	52.80	52.65	09:42:09
88.6	89.9	89.8	90.3	90.6	90.5	90.3	90.0	90.6	89.4	90.5	90.3	90.08	0.16	40.0	40.3	40.3	40.2	52.76	52.59	09:43:09
88.6	90.0	89.8	90.4	90.6	90.5	90.3	90.0	90.6	89.5	90.5	90.3	90.10	0.17	40.0	40.3	40.3	40.2	52.80	52.62	09:44:09
88.6	89.9	89.8	90.3	90.6	90.5	90.3	90.0	90.6	89.4	90.5	90.3	90.09	0.17	40.1	40.3	40.3	40.2	52.68	52.50	09:45:09
88.6	89.9	89.8	90.3	90.6	90.5	90.3	90.0	90.6	89.4	90.5	90.3	90.08	0.17	40.1	40.3	40.3	40.2	52.84	52.67	09:46:09
88.6	89.9	89.8	90.3	90.6	90.5	90.3	90.0	90.6	89.4	90.5	90.3	90.07	0.17	40.1	40.3	40.3	40.2	52.80	52.65	09:47:09
88.6	89.9	89.8	90.4	90.7	90.5	90.3	90.0	90.7	89.5	90.5	90.3	90.10	0.17	40.0	40.3	40.3	40.2	52.88	52.71	09:48:09
88.7	90.0	89.8	90.4	90.7	90.5	90.3	90.1	90.7	89.5	90.5	90.3	90.12	0.18	40.1	40.5	40.4	40.3	52.80	52.68	09:49:09
88.7	90.0	89.8	90.4	90.7	90.5	90.3	90.1	90.7	89.5	90.5	90.3	90.12	0.18	40.0	40.5	40.3	40.3	52.76	52.60	09:50:09
88.6	89.9	89.8	90.4	90.7	90.5	90.3	90.0	90.6	89.5	90.5	90.3	90.10	0.18	40.0	40.3	40.3	40.2	52.64	52.46	09:51:09
88.7	90.0	89.8	90.4	90.7	90.5	90.3	90.0	90.7	89.5	90.5	90.4	90.12	0.18	40.0	40.2	40.3	40.2	52.80	52.58	09:52:09
88.7	90.0	89.8	90.4	90.7	90.5	90.3	90.0	90.7	89.5	90.5	90.3	90.12	0.18	40.0	40.3	40.2	40.2	52.64	52.43	09:53:09
88.7	90.0	89.8	90.4	90.7	90.5	90.4	90.1	90.7	89.5	90.5	90.4	90.13	0.19	40.0	40.2	40.3	40.2	52.80	52.60	09:54:09
88.7	90.0	89.8	90.4	90.7	90.5	90.4	90.0	90.7	89.5	90.5	90.3	90.12	0.19	40.0	40.2	40.2	40.1	52.72	52.50	09:55:09
88.7	90.0	89.8	90.4	90.7	90.5	90.3	90.0	90.6	89.5	90.5	90.3	90.11	0.19	40.0	40.2	40.2	40.1	52.76	52.54	09:56:09
88.7	90.0	89.8	90.4	90.7	90.5	90.3	90.0	90.7	89.5	90.5	90.3	90.12	0.18	40.0	40.2	40.3	40.2	52.64	52.44	09:57:09
88.7	90.0	89.8	90.4	90.7	90.5	90.3	90.0	90.7	89.5	90.5	90.3	90.12	0.18	39.9	40.2	40.2	40.1	52.72	52.49	09:58:09
88.7	90.0	89.8	90.4	90.7	90.5	90.3	90.0	90.7	89.5	90.5	90.3	90.12	0.18	39.9	40.2	40.2	40.1	52.60	52.38	09:59:09
88.6	90.0	89.8	90.4	90.6	90.5	90.3	90.0	90.6	89.5	90.5	90.3	90.10	0.18	40.0	40.2	40.2	40.1	52.56	52.34	10:00:09
88.7	90.0	89.8	90.4	90.7	90.5	90.3	90.0	90.7	89.5	90.5	90.3	90.12	0.18	39.9	40.1	40.1	40.0	52.72	52.45	10:01:09
88.6	89.9	89.8	90.3	90.6	90.5	90.3	90.0	90.6	89.5	90.5	90.3	90.10	0.17	39.9	40.1	40.2	40.1	52.80	52.56	10:02:09
88.7	90.0	89.8	90.4	90.7	90.5	90.3	90.0	90.7	89.5	90.5	90.3	90.11	0.17	40.0	40.2	40.2	40.1	52.84	52.61	10:03:09
88.7	90.0	89.8	90.4	90.7	90.5	90.4	90.1	90.7	89.5	90.5	90.4	90.13	0.16	39.9	40.1	40.2	40.1	52.88	52.62	10:04:09

COMMENTS 3 CONDUCTOR, 6 AWG, 1" CONDUIT, 1/2" THERMOLAG

Tested By Frank A. Denney Date 3-11-93 Reviewed By C. L. Rutledge Date 3-11-93

POSITION 1			POSITION 2			POSITION 3			POSITION AVERAGE			AVE		AMBIENT TEMPERATURE				AMPS		
Trd1	Tbk1	Twh1	Trd2	Tbk2	Twh2	Trd3	Tbk3	Twh3	Tav1	Tav2	Tav3	Twave	SLOPE	Tam1	Tam2	Tam3	Taav	It	I'	TIME
88.7	90.0	89.8	90.4	90.7	90.6	90.4	90.1	90.7	89.5	90.5	90.4	90.14	0.16	40.0	40.2	40.2	40.1	52.76	52.52	10:05:09
88.7	90.0	89.8	90.4	90.7	90.6	90.4	90.1	90.7	89.5	90.5	90.4	90.14	0.16	39.9	40.2	40.2	40.1	52.64	52.40	10:06:09
88.7	90.0	89.8	90.4	90.7	90.5	90.3	90.1	90.7	89.5	90.5	90.4	90.13	0.15	40.0	40.1	40.1	40.1	52.76	52.51	10:07:09
88.7	90.0	89.8	90.4	90.7	90.6	90.4	90.1	90.7	89.5	90.5	90.4	90.13	0.15	40.1	40.2	40.2	40.1	52.64	52.42	10:08:09
88.7	90.0	89.8	90.4	90.7	90.5	90.3	90.0	90.7	89.5	90.5	90.3	90.12	0.14	40.0	40.2	40.3	40.1	52.68	52.46	10:09:09
88.7	89.9	89.8	90.4	90.7	90.5	90.3	90.0	90.6	89.5	90.5	90.3	90.10	0.14	40.0	40.2	40.3	40.1	52.64	52.43	10:10:09
88.7	90.0	89.8	90.4	90.7	90.5	90.3	90.0	90.7	89.5	90.5	90.3	90.11	0.13	40.0	40.2	40.3	40.1	52.68	52.45	10:11:09
88.7	90.0	89.8	90.4	90.7	90.5	90.3	90.0	90.6	89.5	90.5	90.3	90.11	0.12	40.0	40.2	40.3	40.2	52.56	52.35	10:12:09
88.6	89.9	89.8	90.4	90.7	90.5	90.3	90.0	90.6	89.5	90.5	90.3	90.10	0.11	40.1	40.4	40.3	40.2	52.52	52.36	10:13:09
88.6	89.9	89.8	90.3	90.6	90.5	90.3	90.0	90.6	89.4	90.5	90.3	90.09	0.10	40.0	40.3	40.3	40.2	52.60	52.42	10:14:09
88.6	89.9	89.8	90.4	90.6	90.5	90.3	90.0	90.6	89.5	90.5	90.3	90.09	0.10	40.0	40.2	40.2	40.1	52.68	52.47	10:15:09
88.6	89.9	89.8	90.3	90.6	90.5	90.3	90.0	90.6	89.4	90.5	90.3	90.08	0.09	40.0	40.2	40.3	40.2	52.52	52.33	10:16:09
88.6	89.9	89.8	90.3	90.6	90.5	90.3	90.0	90.6	89.4	90.5	90.3	90.08	0.08	40.1	40.3	40.3	40.2	52.60	52.43	10:17:09
88.6	89.9	89.8	90.3	90.6	90.5	90.3	90.0	90.6	89.4	90.5	90.3	90.07	0.07	40.0	40.3	40.3	40.2	52.64	52.47	10:18:09
88.6	89.9	89.7	90.3	90.6	90.4	90.3	90.0	90.6	89.4	90.4	90.3	90.04	0.05	40.0	40.2	40.3	40.2	52.60	52.45	10:19:09
88.6	89.9	89.8	90.3	90.6	90.5	90.3	90.0	90.6	89.4	90.5	90.3	90.06	0.04	40.0	40.4	40.3	40.3	52.60	52.47	10:20:09
88.6	89.9	89.7	90.3	90.6	90.5	90.3	90.0	90.6	89.4	90.5	90.3	90.05	0.03	40.1	40.2	40.3	40.2	52.56	52.40	10:21:09
88.6	89.9	89.8	90.3	90.6	90.5	90.3	90.0	90.6	89.4	90.5	90.3	90.06	0.01	40.0	40.3	40.4	40.2	52.72	52.58	10:22:09
88.6	89.9	89.8	90.3	90.6	90.5	90.3	90.0	90.6	89.4	90.5	90.3	90.06	0.00	40.1	40.2	40.3	40.2	52.80	52.64	10:23:09
88.6	89.9	89.8	90.3	90.6	90.5	90.3	90.0	90.6	89.4	90.5	90.3	90.06	-0.00	40.1	40.2	40.3	40.2	52.64	52.47	10:24:09
88.6	89.9	89.7	90.3	90.6	90.5	90.3	90.0	90.6	89.4	90.5	90.3	90.05	-0.01	40.0	40.4	40.2	40.2	52.64	52.49	10:25:09
88.6	89.9	89.7	90.3	90.6	90.5	90.3	90.0	90.6	89.4	90.5	90.3	90.06	-0.02	40.0	40.3	40.3	40.2	52.48	52.32	10:26:09
88.6	89.9	89.8	90.3	90.6	90.5	90.3	90.0	90.6	89.4	90.5	90.3	90.07	-0.03	40.1	40.5	40.2	40.3	52.64	52.50	10:27:09
88.6	89.9	89.8	90.3	90.6	90.5	90.3	90.0	90.6	89.4	90.5	90.3	90.06	-0.03	40.1	40.4	40.3	40.3	52.68	52.54	10:28:09
88.6	89.9	89.8	90.3	90.6	90.5	90.3	90.0	90.6	89.4	90.5	90.3	90.07	-0.03	40.1	40.3	40.3	40.3	52.68	52.55	10:29:09
88.6	89.9	89.8	90.3	90.6	90.5	90.3	90.0	90.6	89.4	90.5	90.3	90.05	-0.04	40.1	40.2	40.3	40.2	52.36	52.22	10:30:09
88.6	89.9	89.7	90.3	90.6	90.4	90.3	89.9	90.6	89.4	90.4	90.3	90.03	-0.04	40.1	40.3	40.4	40.2	52.64	52.50	10:31:09
88.6	89.9	89.8	90.3	90.6	90.5	90.3	90.0	90.6	89.4	90.5	90.3	90.08	-0.04	40.0	40.3	40.3	40.2	52.60	52.44	10:32:09
88.6	89.9	89.7	90.3	90.6	90.5	90.3	90.0	90.6	89.4	90.5	90.3	90.05	-0.05	40.1	40.3	40.3	40.2	52.52	52.38	10:33:09
88.6	89.9	89.7	90.3	90.6	90.5	90.3	90.0	90.6	89.4	90.5	90.3	90.05	-0.05	40.2	40.5	40.3	40.3	52.64	52.54	10:34:09
88.6	89.9	89.8	90.3	90.6	90.5	90.3	90.0	90.6	89.4	90.5	90.3	90.05	-0.05	40.1	40.4	40.4	40.3	52.68	52.56	10:35:09
88.6	89.9	89.8	90.3	90.6	90.5	90.3	90.0	90.6	89.4	90.5	90.3	90.07	-0.05	40.1	40.3	40.3	40.2	52.76	52.62	10:36:09
88.6	89.9	89.8	90.3	90.6	90.5	90.3	90.0	90.6	89.4	90.5	90.3	90.07	-0.05	40.1	40.3	40.4	40.3	52.76	52.63	10:37:09
88.6	89.9	89.8	90.3	90.6	90.5	90.3	90.0	90.6	89.4	90.5	90.3	90.08	-0.05	40.1	40.4	40.3	40.3	52.80	52.67	10:38:09
88.6	89.9	89.8	90.3	90.6	90.5	90.3	90.0	90.6	89.4	90.5	90.3	90.08	-0.05	40.1	40.4	40.4	40.3	52.68	52.56	10:39:09
88.6	89.9	89.8	90.4	90.6	90.5	90.3	90.0	90.6	89.4	90.5	90.3	90.08	-0.06	40.1	40.3	40.4	40.3	52.68	52.54	10:40:09
88.6	89.9	89.8	90.3	90.6	90.5	90.3	90.0	90.6	89.4	90.5	90.3	90.08	-0.06	40.1	40.3	40.3	40.2	52.72	52.57	10:41:09
88.6	89.9	89.8	90.3	90.6	90.5	90.3	90.0	90.6	89.4	90.5	90.3	90.09	-0.06	40.1	40.4	40.3	40.3	52.80	52.66	10:42:09
88.6	89.9	89.8	90.4	90.7	90.5	90.3	90.0	90.6	89.4	90.5	90.3	90.09	-0.06	40.1	40.4	40.4	40.3	52.84	52.71	10:43:09
88.6	89.9	89.8	90.3	90.7	90.5	90.3	90.0	90.6	89.4	90.5	90.3	90.09	-0.06	40.1	40.3	40.4	40.3	52.84	52.71	10:44:09
88.7	90.0	89.8	90.4	90.7	90.5	90.3	90.0	90.7	89.5	90.5	90.3	90.11	-0.06	40.1	40.4	40.4	40.3	52.80	52.68	10:45:09
88.7	90.0	89.8	90.4	90.7	90.5	90.4	90.0	90.7	89.5	90.5	90.4	90.12	-0.06	40.2	40.3	40.4	40.3	52.80	52.67	10:46:09
88.7	90.0	89.8	90.4	90.7	90.6	90.4	90.1	90.7	89.5	90.6	90.4	90.14	-0.05	40.2	40.4	40.4	40.3	52.76	52.63	10:47:09
88.7	90.0	89.8	90.4	90.7	90.6	90.4	90.1	90.7	89.5	90.5	90.4	90.13	-0.05	40.2	40.4	40.5	40.4	52.92	52.82	10:48:09
88.7	90.0	89.9	90.4	90.7	90.6	90.4	90.1	90.7	89.5	90.6	90.4	90.17	-0.04	40.2	40.4	40.4	40.3	52.92	52.78	10:49:09
88.7	90.0	89.9	90.4	90.7	90.6	90.4	90.1	90.7	89.5	90.6	90.4	90.17	-0.03	40.2	40.4	40.4	40.3	52.88	52.74	10:50:09
88.7	90.0	89.9	90.4	90.7	90.6	90.4	90.1	90.7	89.5	90.6	90.4	90.19	-0.02	40.2	40.4	40.4	40.3	52.76	52.62	10:51:09
88.7	90.0	89.9	90.4	90.7	90.6	90.4	90.1	90.7	89.6	90.6	90.4	90.19	-0.00	40.3	40.4	40.5	40.4	52.60	52.47	10:52:09
88.7	90.0	89.8	90.4	90.7	90.6	90.4	90.1	90.7	89.5	90.6	90.4	90.15	0.00	40.3	40.4	40.4	40.3	52.64	52.52	10:53:09
88.7	90.0	89.8	90.4	90.7	90.6	90.4	90.1	90.7	89.5	90.6	90.4	90.15	0.01	40.3	40.4	40.5	40.4	52.52	52.40	10:54:09
88.7	90.0	89.8	90.4	90.7	90.6	90.4	90.1	90.7	89.5	90.6	90.4	90.16	0.02	40.2	40.5	40.4	40.4	52.68	52.57	10:55:09
88.7	90.0	89.8	90.4	90.7	90.6	90.4	90.1	90.7	89.5	90.6	90.4	90.15	0.03	40.3	40.5	40.4	40.4	52.64	52.53	10:56:09
88.7	90.0	89.8	90.4	90.7	90.6	90.4	90.1	90.7	89.5	90.6	90.4	90.14	0.03	40.2	40.4	40.4	40.4	52.64	52.52	10:57:09
88.7	90.0	89.8	90.4	90.7	90.6	90.4	90.1	90.7	89.5	90.5	90.4	90.13	0.04	40.2	40.5	40.4	40.4	52.64	52.53	10:58:09
88.7	90.0	89.8	90.4	90.7	90.5	90.4	90.0	90.7	89.5	90.5	90.4	90.13	0.04	40.3	40.4	40.4	40.4	52.72	52.61	10:59:09
88.7	90.0	89.8	90.4	90.7	90.6	90.4	90.1	90.7	89.5	90.5	90.4	90.13	0.05	40.2	40.4	40.5	40.4	52.68	52.57	11:00:09
88.7	90.0	89.8	90.4	90.7	90.6	90.4	90.1	90.7	89.5	90.6	90.4	90.15	0.05	40.2	40.4	40.4	40.3	52.72	52.57	11:01:09
88.7	90.0	89.8	90.4	90.7	90.6	90.4	90.1	90.7	89.5	90.6	90.4	90.16	0.06	40.3	40.4	40.4	40.3	52.68	52.55	11:02:09
88.7	90.0	89.8	90.4	90.7	90.6	90.4	90.1	90.7	89.5	90.5	90.4	90.14	0.06	40.2	40.4	40.4	40.3	52.68	52.55	11:03:09
88.7	90.0	89.8	90.4	90.7	90.6	90.4	90.1	90.7	89.5	90.6	90.4	90.15	0.07	40.2	40.4	40.4	40.3	52.68	52.55	11:04:09

COMMENTS _____

Tested By Frank A. Disney Date 3-11-93 Reviewed By C.L. Rutledge Date 3-11-93

AMPACITY TEST. JOB NUMBER 93-0501. SAMPLE NUMBER 93-0501-05 DATA FILE ITEM05NO.004 03-11-1993

POSITION 1			POSITION 2			POSITION 3			POSITION AVERAGE			AVE		AMBIENT TEMPERATURE				AMPS		
Trd1	Tbk1	Twh1	Trd2	Tbk2	Twh2	Trd3	Tbk3	Twh3	Tav1	Tav2	Tav3	Twave	SLOPE	Tam1	Tam2	Tam3	Taav	It	I'	TIME
88.7	90.0	89.9	90.4	90.7	90.6	90.4	90.1	90.7	89.5	90.6	90.4	90.16	0.08	40.2	40.3	40.3	40.3	52.76	52.60	11:05:09
88.7	90.0	89.9	90.4	90.7	90.6	90.4	90.1	90.7	89.5	90.6	90.4	90.16	0.09	40.1	40.3	40.4	40.2	52.64	52.46	11:06:09
88.7	90.0	89.8	90.4	90.7	90.6	90.4	90.1	90.7	89.5	90.6	90.4	90.15	0.10	40.0	40.3	40.4	40.2	52.60	52.42	11:07:09
88.7	90.0	89.8	90.4	90.7	90.6	90.4	90.1	90.7	89.5	90.5	90.4	90.14	0.10	40.1	40.3	40.3	40.2	52.60	52.42	11:08:09
88.7	90.0	89.8	90.4	90.7	90.6	90.4	90.1	90.7	89.5	90.6	90.4	90.13	0.11	40.1	40.3	40.3	40.2	52.64	52.46	11:09:09
88.7	90.0	89.8	90.4	90.7	90.6	90.4	90.1	90.7	89.5	90.6	90.4	90.16	0.11	40.0	40.2	40.3	40.2	52.68	52.46	11:10:09
88.7	90.0	89.9	90.4	90.7	90.6	90.4	90.1	90.7	89.5	90.6	90.4	90.17	0.12	40.0	40.2	40.3	40.2	52.68	52.46	11:11:09
88.7	90.0	89.9	90.4	90.7	90.6	90.4	90.1	90.7	89.5	90.6	90.4	90.17	0.13	40.1	40.2	40.3	40.2	52.52	52.32	11:12:09
88.7	90.0	89.8	90.4	90.7	90.6	90.4	90.1	90.7	89.5	90.6	90.4	90.15	0.13	40.0	40.2	40.3	40.2	52.48	52.25	11:13:09
88.7	90.0	89.8	90.4	90.7	90.6	90.4	90.1	90.7	89.5	90.6	90.4	90.16	0.13	40.0	40.2	40.2	40.1	52.52	52.27	11:14:09
88.7	90.0	89.8	90.4	90.7	90.6	90.4	90.1	90.7	89.5	90.6	90.4	90.14	0.14	40.0	40.2	40.2	40.1	52.60	52.35	11:15:09
88.7	90.0	89.8	90.4	90.7	90.6	90.4	90.1	90.7	89.5	90.6	90.4	90.14	0.14	40.0	40.2	40.2	40.1	52.60	52.36	11:16:09
88.7	90.0	89.8	90.4	90.7	90.6	90.4	90.1	90.7	89.5	90.6	90.4	90.15	0.14	39.9	40.2	40.2	40.1	52.68	52.42	11:17:09
88.7	90.0	89.8	90.4	90.7	90.6	90.4	90.1	90.7	89.5	90.6	90.4	90.15	0.13	39.9	40.1	40.2	40.1	52.56	52.30	11:18:09
88.7	90.0	89.8	90.4	90.7	90.5	90.4	90.1	90.7	89.5	90.5	90.4	90.13	0.13	39.9	40.1	40.2	40.0	52.56	52.28	11:19:09
88.7	90.0	89.8	90.4	90.7	90.5	90.3	90.1	90.7	89.5	90.5	90.4	90.13	0.12	39.9	40.1	40.2	40.1	52.52	52.25	11:20:09
88.7	90.0	89.8	90.4	90.7	90.5	90.4	90.0	90.7	89.5	90.5	90.4	90.12	0.12	39.9	40.1	40.1	40.0	52.56	52.28	11:21:09
88.7	90.0	89.8	90.4	90.7	90.5	90.4	90.1	90.7	89.5	90.5	90.4	90.12	0.11	39.9	40.2	40.2	40.1	52.56	52.30	11:22:09
88.7	90.0	89.8	90.4	90.7	90.6	90.4	90.1	90.7	89.5	90.5	90.4	90.12	0.11	39.9	40.1	40.1	40.0	52.40	52.13	11:23:09
88.7	90.0	89.8	90.4	90.7	90.5	90.3	90.1	90.7	89.5	90.5	90.3	90.12	0.10	39.9	40.1	40.1	40.0	52.52	52.24	11:24:09
88.6	89.9	89.8	90.3	90.6	90.5	90.3	90.0	90.6	89.4	90.5	90.3	90.09	0.09	39.9	40.0	40.2	40.0	52.52	52.25	11:25:09
88.6	89.9	89.8	90.4	90.7	90.5	90.3	90.0	90.7	89.5	90.5	90.3	90.10	0.08	39.9	40.2	40.2	40.1	52.64	52.40	11:26:09
88.7	89.9	89.8	90.4	90.6	90.5	90.3	90.0	90.7	89.5	90.5	90.3	90.10	0.08	39.9	40.0	40.2	40.0	52.68	52.42	11:27:09
88.7	89.9	89.8	90.4	90.7	90.5	90.3	90.0	90.7	89.5	90.5	90.3	90.10	0.07	39.8	40.1	40.1	40.0	52.64	52.36	11:28:09
88.6	89.9	89.8	90.4	90.6	90.5	90.3	90.0	90.7	89.4	90.5	90.3	90.10	0.06	39.8	40.1	40.2	40.0	52.76	52.49	11:29:09
88.7	90.0	89.8	90.4	90.7	90.5	90.4	90.1	90.7	89.5	90.5	90.4	90.13	0.05	39.9	40.1	40.2	40.1	52.76	52.49	11:30:09
88.7	90.0	89.8	90.4	90.7	90.6	90.4	90.1	90.7	89.5	90.5	90.4	90.13	0.05	39.9	40.1	40.2	40.1	52.72	52.47	11:31:09
88.7	89.9	89.8	90.4	90.7	90.5	90.3	90.1	90.7	89.5	90.5	90.4	90.12	0.04	39.9	40.1	40.1	40.1	52.52	52.25	11:32:09
88.7	90.0	89.8	90.4	90.7	90.6	90.4	90.1	90.7	89.5	90.6	90.4	90.14	0.03	39.9	40.1	40.1	40.1	52.72	52.45	11:33:09
88.7	90.0	89.8	90.4	90.7	90.6	90.4	90.1	90.7	89.5	90.5	90.4	90.13	0.03	39.9	40.2	40.2	40.1	52.76	52.51	11:34:09
88.7	90.0	89.8	90.4	90.7	90.6	90.4	90.1	90.7	89.5	90.6	90.4	90.16	0.02	40.0	40.2	40.3	40.2	52.76	52.53	11:35:09
88.7	90.0	89.8	90.4	90.7	90.6	90.4	90.1	90.7	89.5	90.6	90.4	90.17	0.02	40.0	40.2	40.3	40.1	52.76	52.51	11:36:09
88.7	90.0	89.8	90.4	90.7	90.6	90.4	90.1	90.7	89.5	90.6	90.4	90.17	0.02	40.0	40.2	40.2	40.1	52.80	52.56	11:37:09
88.7	90.0	89.8	90.4	90.7	90.6	90.4	90.1	90.7	89.5	90.6	90.4	90.17	0.01	40.0	40.2	40.2	40.1	52.80	52.56	11:38:09
88.7	90.0	89.8	90.4	90.7	90.6	90.4	90.1	90.7	89.5	90.6	90.4	90.17	0.01	40.1	40.2	40.2	40.2	52.52	52.29	11:39:09
88.7	90.0	89.8	90.4	90.7	90.6	90.4	90.1	90.7	89.5	90.6	90.4	90.15	0.01	40.0	40.3	40.2	40.2	52.56	52.34	11:40:09
88.7	90.0	89.8	90.4	90.7	90.6	90.4	90.1	90.7	89.5	90.6	90.4	90.14	-0.00	40.0	40.3	40.3	40.2	52.60	52.42	11:41:09
88.7	90.0	89.8	90.4	90.7	90.6	90.4	90.1	90.7	89.5	90.6	90.4	90.15	-0.00	40.1	40.3	40.3	40.2	52.76	52.56	11:42:09
88.7	90.0	89.8	90.4	90.7	90.6	90.4	90.1	90.7	89.5	90.6	90.4	90.15	-0.01	40.1	40.3	40.3	40.2	52.60	52.40	11:43:09
88.7	90.0	89.8	90.4	90.7	90.5	90.4	90.1	90.7	89.5	90.5	90.4	90.13	-0.02	40.1	40.3	40.3	40.3	52.60	52.43	11:44:09
88.7	90.0	89.8	90.4	90.7	90.6	90.4	90.1	90.7	89.5	90.6	90.4	90.14	-0.02	40.2	40.4	40.4	40.3	52.60	52.45	11:45:09
88.7	90.0	89.8	90.4	90.7	90.5	90.4	90.1	90.7	89.5	90.5	90.4	90.13	-0.02	40.1	40.4	40.4	40.3	52.48	52.33	11:46:09
88.7	90.0	89.8	90.4	90.7	90.5	90.4	90.1	90.7	89.5	90.5	90.4	90.13	-0.02	40.2	40.4	40.3	40.3	52.48	52.35	11:47:09
88.6	89.9	89.8	90.4	90.6	90.5	90.3	90.1	90.6	89.4	90.5	90.3	90.10	-0.03	40.1	40.5	40.4	40.3	52.52	52.41	11:48:09
88.6	89.9	89.8	90.4	90.7	90.5	90.3	90.0	90.6	89.4	90.5	90.3	90.09	-0.03	40.1	40.3	40.4	40.3	52.40	52.27	11:49:09
88.6	89.9	89.8	90.4	90.7	90.5	90.3	90.0	90.6	89.4	90.5	90.3	90.09	-0.03	40.1	40.4	40.4	40.3	52.56	52.43	11:50:09
88.6	89.9	89.8	90.4	90.6	90.5	90.3	90.0	90.7	89.4	90.5	90.3	90.09	-0.03	40.2	40.3	40.3	40.3	52.52	52.39	11:51:09
88.6	89.9	89.8	90.3	90.6	90.5	90.3	90.0	90.6	89.4	90.5	90.3	90.08	-0.03	40.2	40.4	40.4	40.3	52.40	52.28	11:52:09
88.6	89.9	89.8	90.3	90.6	90.5	90.3	90.0	90.6	89.4	90.5	90.3	90.07	-0.04	40.1	40.4	40.4	40.3	52.36	52.24	11:53:09
88.6	89.9	89.7	90.3	90.6	90.5	90.3	90.0	90.6	89.4	90.5	90.3	90.04	-0.05	40.2	40.5	40.5	40.4	52.40	52.35	11:54:09
88.6	89.9	89.7	90.3	90.6	90.5	90.3	90.0	90.6	89.4	90.5	90.3	90.05	-0.05	40.2	40.4	40.5	40.4	52.60	52.52	11:55:09
88.6	89.9	89.7	90.3	90.6	90.5	90.3	90.0	90.6	89.4	90.5	90.3	90.05	-0.06	40.3	40.4	40.5	40.4	52.80	52.74	11:56:09
88.6	89.9	89.8	90.3	90.6	90.5	90.3	90.0	90.6	89.4	90.5	90.3	90.08	-0.06	40.3	40.5	40.5	40.4	52.80	52.74	11:57:09
88.6	89.9	89.8	90.4	90.7	90.5	90.3	90.0	90.6	89.4	90.5	90.3	90.10	-0.06	40.3	40.5	40.5	40.4	52.88	52.82	11:58:09
88.6	89.9	89.8	90.3	90.6	90.5	90.3	90.0	90.6	89.4	90.5	90.3	90.08	-0.07	40.2	40.7	40.5	40.5	52.80	52.78	11:59:09
88.6	89.9	89.8	90.4	90.7	90.5	90.3	90.1	90.7	89.5	90.5	90.3	90.11	-0.07	40.2	40.5	40.5	40.4	52.88	52.79	12:00:09
88.7	90.0	89.8	90.4	90.7	90.6	90.4	90.1	90.7	89.5	90.5	90.4	90.14	-0.07	40.2	40.4	40.5	40.4	52.92	52.81	12:01:09
88.7	90.0	89.8	90.4	90.7	90.6	90.4	90.1	90.7	89.5	90.6	90.4	90.15	-0.06	40.3	40.5	40.4	40.4	52.96	52.86	12:02:09
88.7	90.0	89.8	90.4	90.7	90.6	90.4	90.1	90.7	89.5	90.6	90.4	90.15	-0.06	40.2	40.4	40.4	40.3	52.72	52.59	12:03:09
88.7	90.0	89.8	90.4	90.7	90.6	90.4	90.1	90.7	89.5	90.6	90.4	90.16	-0.05	40.3	40.4	40.4	40.4	52.76	52.63	12:04:09

COMMENTS _____

Tested By Frank G. Denney Date 3-11-93 Reviewed By C L Rutledge Date 3-11-93

AMPACITY TEST. JOB NUMBER 93-0501. SAMPLE NUMBER 93-0501-06 03-10-1993

POSITION 1			POSITION 2			POSITION 3			POSITION AVERAGE			AVE		AMBIENT TEMPERATURE				AMPS		
Trd1	Tbk1	Twh1	Trd2	Tbk2	Twh2	Trd3	Tbk3	Twh3	Tav1	Tav2	Tav3	Twave	SLOPE	Tam1	Tam2	Tam3	Taav	It	I'	TIME
89.2	90.3	90.3	90.2	90.4	90.5	90.4	90.8	91.1	89.9	90.4	90.8	90.35	0.10	40.1	40.2	40.1	40.1	52.20	52.02	01:08:
89.2	90.3	90.3	90.2	90.4	90.6	90.4	90.8	91.1	89.9	90.4	90.8	90.38	0.11	40.0	40.3	40.1	40.2	52.32	52.16	01:09:
89.2	90.3	90.3	90.2	90.4	90.6	90.4	90.8	91.1	89.9	90.4	90.8	90.38	0.12	40.0	40.3	40.1	40.1	52.16	51.99	01:10:
89.2	90.3	90.3	90.2	90.4	90.5	90.4	90.8	91.1	89.9	90.4	90.8	90.36	0.13	40.1	40.2	40.1	40.1	52.12	51.95	01:11:
89.2	90.3	90.3	90.2	90.4	90.5	90.4	90.8	91.1	89.9	90.4	90.8	90.37	0.14	40.1	40.2	40.1	40.1	52.20	52.03	01:12:
89.2	90.3	90.3	90.2	90.4	90.6	90.4	90.8	91.1	89.9	90.4	90.8	90.37	0.15	40.1	40.2	40.0	40.1	52.08	51.88	01:13:
89.2	90.3	90.3	90.2	90.4	90.5	90.4	90.8	91.1	89.9	90.4	90.8	90.37	0.16	40.0	40.3	40.1	40.1	52.04	51.88	01:14:
89.2	90.3	90.3	90.2	90.4	90.5	90.4	90.8	91.1	89.9	90.4	90.8	90.36	0.17	40.1	40.2	40.1	40.1	52.24	52.06	01:15:
89.2	90.3	90.3	90.2	90.4	90.5	90.4	90.8	91.1	89.9	90.4	90.8	90.35	0.18	40.1	40.2	40.1	40.1	52.20	52.05	01:16:
89.2	90.3	90.3	90.2	90.4	90.5	90.4	90.8	91.1	89.9	90.4	90.8	90.37	0.19	40.1	40.3	40.1	40.2	52.20	52.05	01:17:
89.2	90.3	90.3	90.2	90.4	90.5	90.4	90.8	91.1	89.9	90.4	90.8	90.37	0.19	40.1	40.3	40.1	40.2	52.08	51.94	01:18:
89.2	90.3	90.3	90.2	90.4	90.5	90.4	90.8	91.1	89.9	90.4	90.8	90.36	0.19	40.1	40.3	40.2	40.2	52.20	52.06	01:19:
89.2	90.3	90.3	90.2	90.4	90.5	90.4	90.8	91.1	89.9	90.4	90.8	90.36	0.19	40.1	40.3	40.1	40.2	52.20	52.05	01:20:
89.2	90.3	90.3	90.2	90.4	90.5	90.4	90.8	91.1	89.9	90.4	90.8	90.34	0.19	40.0	40.4	40.1	40.2	52.20	52.08	01:21:
89.2	90.3	90.3	90.2	90.4	90.5	90.4	90.8	91.1	89.9	90.4	90.8	90.37	0.19	40.1	40.3	40.1	40.2	52.20	52.04	01:22:
89.2	90.3	90.3	90.2	90.4	90.5	90.4	90.8	91.1	89.9	90.4	90.8	90.37	0.19	40.2	40.2	40.0	40.1	52.20	52.03	01:23:
89.2	90.3	90.3	90.2	90.4	90.5	90.4	90.8	91.1	89.9	90.4	90.8	90.36	0.19	40.1	40.2	40.1	40.1	52.16	52.00	01:24:
89.2	90.3	90.3	90.2	90.4	90.6	90.4	90.8	91.1	89.9	90.4	90.8	90.37	0.19	40.1	40.2	40.1	40.1	52.08	51.90	01:25:
89.2	90.3	90.3	90.2	90.4	90.5	90.4	90.8	91.1	89.9	90.4	90.8	90.35	0.18	40.1	40.2	40.1	40.2	52.12	51.98	01:26:
89.2	90.3	90.2	90.2	90.4	90.5	90.4	90.8	91.1	89.9	90.4	90.8	90.34	0.18	40.1	40.1	40.1	40.1	52.12	51.96	01:27:
89.2	90.3	90.3	90.2	90.4	90.5	90.4	90.8	91.1	89.9	90.4	90.8	90.35	0.17	40.0	40.2	40.2	40.1	52.20	52.04	01:28:
89.2	90.3	90.3	90.2	90.4	90.5	90.4	90.8	91.1	89.9	90.4	90.8	90.35	0.17	40.1	40.2	40.1	40.1	52.24	52.08	01:29:
89.2	90.3	90.3	90.2	90.4	90.5	90.4	90.8	91.1	89.9	90.4	90.8	90.36	0.17	40.1	40.2	40.0	40.1	52.24	52.06	01:30:
89.2	90.3	90.3	90.2	90.4	90.5	90.4	90.8	91.1	89.9	90.4	90.8	90.34	0.16	40.0	40.3	40.1	40.2	52.16	52.01	01:31:
89.2	90.3	90.3	90.2	90.4	90.5	90.4	90.8	91.1	89.9	90.4	90.8	90.37	0.16	40.0	40.3	40.1	40.1	52.12	51.96	01:32:
89.2	90.3	90.3	90.2	90.4	90.5	90.4	90.8	91.1	89.9	90.4	90.8	90.36	0.15	40.0	40.2	40.0	40.1	52.08	51.91	01:33:
89.2	90.3	90.2	90.2	90.4	90.5	90.4	90.8	91.1	89.9	90.4	90.8	90.34	0.14	40.1	40.3	40.1	40.2	52.08	51.94	01:34:
89.2	90.3	90.3	90.2	90.4	90.5	90.4	90.8	91.1	89.9	90.4	90.8	90.35	0.14	40.1	40.4	40.1	40.2	52.20	52.07	01:35:
89.2	90.3	90.3	90.2	90.4	90.5	90.4	90.8	91.1	89.9	90.4	90.8	90.36	0.13	40.1	40.2	40.1	40.1	52.20	52.04	01:36:
89.2	90.3	90.3	90.2	90.4	90.5	90.4	90.8	91.1	89.9	90.4	90.8	90.37	0.12	40.2	40.3	40.1	40.2	52.16	52.03	01:37:
89.2	90.3	90.3	90.2	90.4	90.5	90.4	90.8	91.1	89.9	90.4	90.8	90.36	0.12	40.1	40.3	40.1	40.2	52.12	51.98	01:38:
89.2	90.3	90.3	90.2	90.4	90.5	90.4	90.8	91.1	89.9	90.4	90.8	90.36	0.11	40.0	40.2	40.0	40.1	52.00	51.81	01:39:
89.2	90.3	90.3	90.2	90.4	90.5	90.4	90.8	91.1	89.9	90.4	90.8	90.35	0.11	40.1	40.2	40.1	40.1	52.12	51.96	01:40:
89.2	90.3	90.3	90.2	90.4	90.5	90.4	90.8	91.1	89.9	90.4	90.8	90.35	0.10	40.2	40.3	40.2	40.2	52.08	51.97	01:41:
89.2	90.3	90.3	90.2	90.4	90.5	90.4	90.8	91.1	89.9	90.4	90.8	90.34	0.09	40.1	40.3	40.1	40.2	52.24	52.12	01:42:
89.2	90.3	90.3	90.2	90.4	90.5	90.4	90.8	91.1	89.9	90.4	90.8	90.35	0.09	40.1	40.3	40.1	40.2	52.12	51.98	01:43:
89.2	90.3	90.3	90.2	90.4	90.5	90.4	90.8	91.1	89.9	90.4	90.8	90.36	0.08	40.1	40.3	40.2	40.2	52.20	52.07	01:44:
89.2	90.3	90.3	90.2	90.4	90.5	90.4	90.8	91.1	89.9	90.4	90.8	90.37	0.08	40.1	40.3	40.1	40.2	52.12	51.97	01:45:
89.2	90.3	90.3	90.2	90.4	90.5	90.4	90.8	91.1	89.9	90.4	90.8	90.37	0.07	40.1	40.2	40.0	40.1	52.24	52.06	01:46:
89.2	90.3	90.3	90.2	90.4	90.5	90.4	90.8	91.1	89.9	90.4	90.8	90.38	0.07	40.1	40.3	40.1	40.1	52.12	51.96	01:47:
89.2	90.3	90.3	90.2	90.4	90.5	90.4	90.8	91.1	89.9	90.4	90.8	90.37	0.06	40.0	40.2	40.1	40.1	52.12	51.95	01:48:
89.2	90.3	90.3	90.2	90.4	90.5	90.4	90.8	91.1	89.9	90.4	90.8	90.36	0.06	40.1	40.3	40.1	40.2	52.00	51.87	01:49:
89.2	90.3	90.3	90.2	90.4	90.5	90.4	90.8	91.1	89.9	90.4	90.8	90.35	0.05	40.1	40.2	40.1	40.1	52.04	51.87	01:50:
89.2	90.3	90.2	90.2	90.4	90.5	90.4	90.8	91.1	89.9	90.4	90.8	90.34	0.04	40.1	40.2	40.1	40.1	51.96	51.80	01:51:
89.2	90.3	90.3	90.2	90.4	90.5	90.4	90.8	91.1	89.9	90.4	90.8	90.35	0.03	40.0	40.2	40.1	40.1	52.04	51.87	01:52:
89.2	90.3	90.2	90.2	90.4	90.5	90.4	90.8	91.1	89.9	90.4	90.8	90.34	0.03	40.1	40.3	40.1	40.2	51.92	51.78	01:53:
89.2	90.3	90.2	90.2	90.4	90.5	90.4	90.7	91.1	89.9	90.3	90.7	90.31	0.01	40.1	40.4	40.2	40.2	52.12	52.03	01:54:
89.2	90.3	90.2	90.2	90.4	90.5	90.4	90.8	91.1	89.9	90.4	90.8	90.34	0.01	40.1	40.3	40.2	40.2	52.04	51.92	01:55:
89.2	90.3	90.2	90.2	90.4	90.5	90.4	90.8	91.1	89.9	90.4	90.7	90.33	0.00	40.1	40.2	40.2	40.2	52.28	52.15	01:56:
89.2	90.3	90.3	90.2	90.4	90.5	90.4	90.8	91.1	89.9	90.4	90.8	90.34	-0.00	40.1	40.2	40.1	40.1	52.20	52.05	01:57:
89.2	90.3	90.3	90.2	90.4	90.5	90.4	90.8	91.1	89.9	90.4	90.8	90.36	-0.01	40.1	40.2	40.1	40.1	52.16	52.01	01:58:
89.2	90.3	90.3	90.2	90.4	90.5	90.4	90.8	91.1	89.9	90.4	90.8	90.35	-0.01	40.1	40.2	40.1	40.1	52.08	51.93	01:59:
89.2	90.3	90.3	90.2	90.4	90.5	90.4	90.8	91.1	89.9	90.4	90.8	90.35	-0.01	40.1	40.3	40.1	40.2	52.08	51.94	02:00:
89.2	90.3	90.3	90.2	90.4	90.5	90.4	90.8	91.1	89.9	90.4	90.8	90.36	-0.01	40.1	40.2	40.2	40.1	52.16	51.99	02:01:
89.2	90.3	90.3	90.2	90.4	90.5	90.4	90.8	91.1	89.9	90.4	90.8	90.36	-0.01	40.1	40.3	40.1	40.1	52.24	52.09	02:02:
89.2	90.3	90.3	90.2	90.4	90.5	90.4	90.8	91.1	89.9	90.4	90.8	90.37	-0.01	40.1	40.4	40.1	40.2	52.20	52.07	02:03:
89.2	90.3	90.3	90.2	90.4	90.5	90.4	90.8	91.1	89.9	90.4	90.8	90.37	-0.01	40.1	40.3	40.1	40.2	52.24	52.10	02:04:
89.2	90.3	90.3	90.2	90.4	90.5	90.4	90.8	91.1	89.9	90.4	90.8	90.36	-0.01	40.1	40.3	40.1	40.2	51.92	51.79	02:05:
89.2	90.3	90.3	90.2	90.4	90.5	90.4	90.8	91.1	89.9	90.4	90.8	90.36	-0.01	40.1	40.2	40.1	40.1	52.08	51.92	02:06:
89.2	90.3	90.3	90.2	90.4	90.5	90.4	90.8	91.1	89.9	90.4	90.8	90.34	-0.01	40.0	40.3	40.0	40.1	52.04	51.87	02:07:

COMMENTS DATA LOGGING SOFTWARE DID NOT CHECK THAT THE ROOM TEMPERATURE BE 40°C ± 2°C NOR THAT THE AVERAGE TEMPERATURES AT LOCATIONS #1 AND #3 BE WITHIN ± 2°C OF THE TEMPERATURE (AVERAGE) AT LOCATION # 2. CHECK OF TEST DATA INDICATES THE TEMPERATURES ARE WITHIN SPECIFICATION (LOG BOOK PAGE 19)

Tested By Frank A. Werner Date 3-10-93 Reviewed By C.L. Rutledge Date 3-10-93

AMPACITY TEST. JOB NUMBER 93-0501. SAMPLE NUMBER 93-0501-06 03-10-1993

POSITION 1			POSITION 2			POSITION 3			POSITION AVERAGE			AVE		AMBIENT TEMPERATURE				AMPS		
Trd1	Tbk1	Twh1	Trd2	Tbk2	Twh2	Trd3	Tbk3	Twh3	Tav1	Tav2	Tav3	Twave	SLOPE	Tam1	Tam2	Tam3	Taav	It	I'	TIME
89.2	90.3	90.3	90.2	90.4	90.5	90.4	90.8	91.1	89.9	90.4	90.8	90.34	-0.02	40.0	40.3	40.1	40.2	52.16	52.02	02:08:07
89.2	90.3	90.3	90.2	90.4	90.5	90.4	90.8	91.1	89.9	90.4	90.8	90.35	-0.01	40.0	40.3	40.0	40.1	52.20	52.04	02:09:07
89.2	90.3	90.3	90.2	90.4	90.5	90.4	90.8	91.1	89.9	90.4	90.8	90.37	-0.01	40.0	40.1	40.1	40.1	52.20	52.01	02:10:07
89.2	90.3	90.3	90.2	90.4	90.5	90.4	90.8	91.1	89.9	90.4	90.8	90.37	-0.01	40.1	40.2	40.1	40.1	52.12	51.96	02:11:07
89.3	90.3	90.3	90.2	90.4	90.6	90.4	90.8	91.2	90.0	90.4	90.8	90.39	-0.00	40.1	40.3	40.1	40.2	52.24	52.08	02:12:07
89.2	90.3	90.3	90.2	90.4	90.6	90.4	90.8	91.1	89.9	90.4	90.8	90.38	-0.00	40.0	40.3	40.2	40.1	52.20	52.04	02:13:07
89.3	90.4	90.3	90.2	90.5	90.6	90.5	90.8	91.2	90.0	90.4	90.8	90.40	0.01	40.0	40.3	40.1	40.1	52.24	52.06	02:14:07
89.3	90.3	90.3	90.3	90.5	90.6	90.5	90.8	91.2	90.0	90.4	90.8	90.41	0.01	40.1	40.1	40.1	40.1	52.20	51.99	02:15:07
89.3	90.4	90.3	90.3	90.5	90.6	90.5	90.8	91.2	90.0	90.4	90.8	90.41	0.02	40.0	40.2	40.1	40.1	52.20	52.01	02:16:07
89.3	90.4	90.3	90.2	90.5	90.6	90.5	90.8	91.2	90.0	90.4	90.8	90.42	0.02	40.0	40.3	40.1	40.2	52.24	52.06	02:17:07
89.3	90.3	90.3	90.2	90.5	90.6	90.5	90.8	91.2	90.0	90.4	90.8	90.40	0.03	40.0	40.4	40.1	40.2	52.20	52.04	02:18:07
89.3	90.3	90.3	90.3	90.5	90.6	90.5	90.8	91.2	90.0	90.4	90.8	90.41	0.03	40.1	40.2	40.1	40.1	52.12	51.94	02:19:07
89.3	90.4	90.3	90.3	90.5	90.6	90.5	90.8	91.2	90.0	90.4	90.8	90.42	0.04	40.0	40.2	40.1	40.1	52.20	51.99	02:20:07
89.3	90.3	90.3	90.2	90.4	90.6	90.5	90.8	91.2	90.0	90.4	90.8	90.40	0.04	40.1	40.3	40.1	40.2	52.00	51.83	02:21:07
89.3	90.3	90.3	90.3	90.5	90.6	90.5	90.8	91.2	90.0	90.4	90.8	90.41	0.04	40.1	40.3	40.1	40.1	52.12	51.94	02:22:07
89.3	90.4	90.3	90.2	90.5	90.6	90.5	90.8	91.2	90.0	90.4	90.8	90.41	0.05	40.1	40.2	40.1	40.1	52.12	51.94	02:23:07
89.3	90.3	90.3	90.3	90.5	90.6	90.5	90.8	91.2	90.0	90.4	90.8	90.41	0.05	40.0	40.2	40.1	40.1	52.24	52.04	02:24:07
89.3	90.4	90.3	90.3	90.5	90.6	90.5	90.8	91.2	90.0	90.4	90.8	90.42	0.06	40.0	40.2	40.2	40.1	52.08	51.89	02:25:07
89.3	90.3	90.3	90.3	90.5	90.6	90.5	90.8	91.2	90.0	90.4	90.8	90.41	0.06	40.1	40.3	40.1	40.2	52.08	51.91	02:26:07
89.2	90.3	90.3	90.2	90.4	90.5	90.4	90.8	91.1	89.9	90.4	90.8	90.38	0.06	40.0	40.2	40.0	40.1	52.08	51.89	02:27:07
89.3	90.3	90.3	90.2	90.4	90.6	90.5	90.8	91.1	90.0	90.4	90.8	90.39	0.06	40.0	40.1	40.1	40.1	52.16	51.95	02:28:07
89.3	90.3	90.3	90.2	90.5	90.6	90.5	90.8	91.2	90.0	90.4	90.8	90.40	0.06	40.0	40.2	40.1	40.1	52.08	51.89	02:29:07
89.3	90.3	90.3	90.2	90.4	90.6	90.5	90.8	91.2	90.0	90.4	90.8	90.40	0.06	40.0	40.1	40.1	40.1	52.24	52.03	02:30:07
89.3	90.4	90.3	90.3	90.5	90.6	90.5	90.8	91.2	90.0	90.4	90.8	90.41	0.06	40.0	40.1	40.1	40.1	52.16	51.96	02:31:07
89.3	90.3	90.3	90.3	90.5	90.6	90.5	90.8	91.2	90.0	90.4	90.8	90.41	0.07	40.0	40.2	40.1	40.1	52.28	52.08	02:32:07
89.3	90.3	90.3	90.2	90.4	90.6	90.5	90.8	91.2	90.0	90.4	90.8	90.40	0.07	40.1	40.2	40.1	40.1	52.12	51.93	02:33:07
89.3	90.3	90.3	90.2	90.4	90.6	90.5	90.8	91.2	90.0	90.4	90.8	90.40	0.07	40.1	40.2	40.1	40.1	52.20	52.02	02:34:07
89.2	90.3	90.3	90.2	90.5	90.6	90.5	90.8	91.1	90.0	90.4	90.8	90.40	0.07	40.0	40.2	40.0	40.1	52.20	51.99	02:35:07
89.3	90.3	90.3	90.2	90.5	90.6	90.5	90.8	91.2	90.0	90.4	90.8	90.40	0.07	40.0	40.2	40.0	40.1	52.16	51.95	02:36:07
89.3	90.4	90.3	90.3	90.5	90.6	90.5	90.9	91.2	90.0	90.4	90.8	90.43	0.07	40.0	40.2	40.1	40.1	52.24	52.04	02:37:07
89.3	90.3	90.3	90.3	90.5	90.6	90.5	90.8	91.2	90.0	90.4	90.8	90.41	0.08	40.1	40.2	40.1	40.1	52.24	52.05	02:38:07
89.3	90.4	90.3	90.3	90.5	90.6	90.5	90.8	91.2	90.0	90.4	90.8	90.41	0.08	40.0	40.2	40.1	40.1	52.28	52.09	02:39:07
89.3	90.4	90.3	90.3	90.5	90.6	90.5	90.8	91.2	90.0	90.5	90.8	90.43	0.08	40.0	40.3	40.1	40.1	52.32	52.13	02:40:07
89.3	90.4	90.3	90.3	90.5	90.6	90.5	90.8	91.2	90.0	90.5	90.8	90.43	0.08	40.0	40.2	40.1	40.1	52.36	52.15	02:41:07
89.3	90.4	90.3	90.3	90.5	90.6	90.5	90.8	91.2	90.0	90.4	90.8	90.43	0.09	40.0	40.2	40.1	40.1	52.36	52.16	02:42:07
89.3	90.4	90.4	90.3	90.5	90.6	90.5	90.9	91.2	90.0	90.5	90.9	90.46	0.09	40.1	40.2	40.1	40.1	52.24	52.02	02:43:07
89.3	90.4	90.3	90.3	90.5	90.6	90.5	90.9	91.2	90.0	90.5	90.9	90.44	0.09	40.1	40.2	40.1	40.1	52.32	52.11	02:44:07
89.3	90.4	90.4	90.3	90.5	90.6	90.5	90.9	91.2	90.0	90.5	90.9	90.46	0.10	40.0	40.3	40.1	40.1	52.28	52.07	02:45:07
89.3	90.4	90.4	90.3	90.5	90.6	90.5	90.9	91.2	90.0	90.5	90.9	90.45	0.10	40.0	40.2	40.1	40.1	52.28	52.07	02:46:07
89.3	90.4	90.4	90.3	90.5	90.6	90.5	90.9	91.2	90.0	90.5	90.9	90.46	0.11	40.0	40.2	40.1	40.1	52.12	51.91	02:47:07
89.3	90.4	90.3	90.3	90.5	90.6	90.5	90.9	91.2	90.0	90.5	90.9	90.46	0.11	40.0	40.1	40.1	40.1	52.24	52.00	02:48:07
89.3	90.4	90.4	90.3	90.5	90.6	90.5	90.9	91.2	90.0	90.5	90.9	90.45	0.12	40.0	40.3	40.1	40.1	52.20	52.00	02:49:07
89.3	90.4	90.4	90.3	90.5	90.6	90.5	90.9	91.2	90.0	90.5	90.9	90.45	0.12	40.0	40.2	40.1	40.1	52.12	51.91	02:50:07
89.3	90.4	90.3	90.3	90.5	90.6	90.5	90.9	91.2	90.0	90.5	90.9	90.44	0.12	40.1	40.2	40.1	40.1	52.24	52.04	02:51:07
89.3	90.4	90.4	90.3	90.5	90.6	90.5	90.9	91.2	90.0	90.5	90.9	90.45	0.12	40.0	40.2	40.1	40.1	52.20	51.98	02:52:07
89.3	90.4	90.3	90.3	90.5	90.6	90.5	90.9	91.2	90.0	90.5	90.9	90.45	0.12	40.0	40.2	40.1	40.1	52.24	52.04	02:53:07
89.3	90.4	90.3	90.3	90.5	90.6	90.5	90.9	91.2	90.0	90.5	90.9	90.45	0.11	40.0	40.1	40.0	40.1	52.20	51.96	02:54:07
89.3	90.4	90.4	90.3	90.5	90.6	90.5	90.9	91.2	90.0	90.5	90.9	90.46	0.11	40.1	40.2	40.1	40.1	52.36	52.16	02:55:07
89.3	90.4	90.4	90.3	90.5	90.6	90.5	90.9	91.2	90.0	90.5	90.9	90.46	0.11	40.1	40.1	40.2	40.1	52.28	52.07	02:56:07
89.3	90.4	90.4	90.3	90.5	90.6	90.5	90.9	91.2	90.0	90.5	90.9	90.46	0.11	40.1	40.3	40.1	40.2	52.20	52.02	02:57:07
89.3	90.4	90.4	90.3	90.5	90.6	90.5	90.9	91.2	90.0	90.5	90.9	90.46	0.11	40.1	40.1	40.1	40.1	52.16	51.94	02:58:07
89.3	90.4	90.4	90.3	90.5	90.6	90.5	90.9	91.2	90.0	90.5	90.9	90.46	0.11	40.1	40.2	40.1	40.1	52.20	52.00	02:59:07
89.3	90.4	90.4	90.3	90.5	90.6	90.5	90.9	91.2	90.0	90.5	90.9	90.46	0.11	40.1	40.3	40.1	40.2	52.12	51.93	03:00:07
89.3	90.4	90.4	90.3	90.5	90.6	90.5	90.9	91.2	90.0	90.5	90.9	90.45	0.11	40.0	40.3	40.1	40.1	52.12	51.92	03:01:07
89.3	90.4	90.3	90.3	90.5	90.6	90.5	90.9	91.2	90.0	90.5	90.8	90.44	0.10	40.1	40.2	40.1	40.1	52.08	51.88	03:02:07
89.3	90.4	90.4	90.3	90.5	90.6	90.5	90.9	91.2	90.0	90.5	90.9	90.47	0.10	40.1	40.2	40.1	40.1	52.28	52.07	03:03:07
89.3	90.4	90.4	90.3	90.5	90.6	90.5	90.9	91.2	90.0	90.5	90.9	90.46	0.10	40.1	40.2	40.1	40.1	52.28	52.07	03:04:07
89.3	90.4	90.4	90.3	90.5	90.6	90.5	90.9	91.2	90.0	90.5	90.9	90.45	0.10	40.0	40.2	40.1	40.1	52.24	52.03	03:05:07
89.3	90.4	90.4	90.3	90.5	90.6	90.5	90.9	91.2	90.0	90.5	90.9	90.45	0.10	40.0	40.3	40.0	40.1	52.20	51.98	03:06:07
89.3	90.4	90.3	90.3	90.5	90.6	90.5	90.8	91.2	90.0	90.5	90.8	90.44	0.09	40.1	40.2	40.1	40.1	52.16	51.96	03:07:07

COMMENTS

Tested By Frank A. Deeney Date 3-10-93 Reviewed By C L Rutledge Date 3-10-93

POSITION 1			POSITION 2			POSITION 3			POSITION AVERAGE			AVE		AMBIENT TEMPERATURE				AMPS		
Trd1	Tbk1	Twh1	Trd2	Tbk2	Twh2	Trd3	Tbk3	Twh3	Tav1	Tav2	Tav3	Twave	SLOPE	Tam1	Tam2	Tam3	Taav	It	I'	TIME
89.3	90.4	90.3	90.3	90.5	90.6	90.5	90.8	91.2	90.0	90.5	90.8	90.44	0.08	40.0	40.2	40.0	40.1	52.12	51.89	03:08:07
89.3	90.4	90.3	90.3	90.5	90.6	90.5	90.9	91.2	90.0	90.5	90.9	90.45	0.08	40.0	40.2	40.1	40.1	52.20	51.98	03:09:07
89.3	90.4	90.4	90.3	90.5	90.6	90.5	90.9	91.2	90.0	90.5	90.9	90.46	0.08	40.0	40.2	40.1	40.1	52.20	51.98	03:10:07
89.3	90.4	90.4	90.3	90.5	90.6	90.5	90.9	91.2	90.0	90.5	90.9	90.46	0.07	40.0	40.2	40.1	40.1	52.24	52.02	03:11:07
89.3	90.4	90.3	90.3	90.5	90.6	90.5	90.9	91.2	90.0	90.5	90.9	90.46	0.07	40.0	40.1	40.1	40.1	52.24	51.99	03:12:07
89.3	90.4	90.3	90.3	90.5	90.6	90.5	90.9	91.2	90.0	90.5	90.9	90.45	0.07	40.0	40.1	40.1	40.1	52.08	51.84	03:13:07
89.3	90.4	90.4	90.3	90.5	90.6	90.5	90.9	91.2	90.0	90.5	90.9	90.46	0.07	40.0	40.2	40.1	40.1	52.04	51.82	03:14:07
89.3	90.4	90.4	90.3	90.5	90.6	90.5	90.9	91.2	90.0	90.5	90.8	90.44	0.07	40.0	40.4	40.0	40.1	52.12	51.92	03:15:07
89.3	90.4	90.3	90.3	90.5	90.6	90.5	90.9	91.2	90.0	90.5	90.8	90.43	0.06	40.0	40.2	40.1	40.1	52.12	51.92	03:16:07
89.3	90.4	90.3	90.3	90.5	90.6	90.5	90.8	91.2	90.0	90.4	90.8	90.43	0.06	40.1	40.2	40.1	40.1	52.16	51.97	03:17:07
89.3	90.4	90.3	90.3	90.5	90.6	90.5	90.9	91.2	90.0	90.5	90.9	90.44	0.06	40.0	40.1	40.1	40.1	52.20	51.98	03:18:07
89.3	90.4	90.3	90.3	90.5	90.6	90.5	90.9	91.2	90.0	90.5	90.9	90.44	0.06	40.0	40.2	40.0	40.1	52.24	52.02	03:19:07
89.3	90.4	90.3	90.3	90.5	90.6	90.5	90.8	91.2	90.0	90.4	90.8	90.42	0.05	40.0	40.2	40.1	40.1	52.04	51.81	03:20:07
89.3	90.4	90.3	90.3	90.5	90.6	90.5	90.8	91.2	90.0	90.5	90.8	90.44	0.05	40.0	40.2	40.1	40.1	52.20	51.99	03:21:07
89.3	90.4	90.3	90.3	90.5	90.6	90.5	90.9	91.2	90.0	90.5	90.9	90.44	0.05	40.0	40.2	40.0	40.1	52.08	51.85	03:22:07
89.3	90.4	90.3	90.3	90.5	90.6	90.5	90.8	91.2	90.0	90.4	90.8	90.42	0.04	40.1	40.1	40.1	40.1	51.96	51.75	03:23:07
89.3	90.4	90.3	90.3	90.5	90.6	90.5	90.8	91.2	90.0	90.4	90.8	90.42	0.04	40.0	40.2	40.1	40.1	51.96	51.75	03:24:07
89.3	90.4	90.3	90.3	90.5	90.6	90.5	90.8	91.2	90.0	90.4	90.8	90.41	0.04	40.0	40.1	40.1	40.1	52.12	51.90	03:25:07
89.3	90.3	90.3	90.2	90.5	90.6	90.5	90.8	91.2	90.0	90.4	90.8	90.40	0.03	40.0	40.1	40.0	40.0	52.12	51.89	03:26:07
89.3	90.3	90.3	90.3	90.5	90.6	90.5	90.8	91.2	90.0	90.4	90.8	90.41	0.02	40.0	40.1	40.0	40.0	52.20	51.97	03:27:07
89.3	90.3	90.3	90.3	90.5	90.6	90.5	90.8	91.2	90.0	90.4	90.8	90.41	0.01	40.0	40.1	40.0	40.1	52.12	51.90	03:28:07
89.3	90.4	90.3	90.3	90.5	90.6	90.5	90.8	91.2	90.0	90.4	90.8	90.42	0.01	40.0	40.2	40.1	40.1	52.24	52.03	03:29:07
89.3	90.4	90.3	90.3	90.5	90.6	90.5	90.8	91.2	90.0	90.4	90.8	90.41	0.00	40.0	40.3	40.1	40.1	52.08	51.89	03:30:07
89.3	90.4	90.3	90.3	90.5	90.6	90.5	90.8	91.2	90.0	90.4	90.8	90.43	-0.00	40.1	40.3	40.1	40.1	52.20	52.01	03:31:07
89.3	90.4	90.3	90.3	90.5	90.6	90.5	90.8	91.2	90.0	90.4	90.8	90.42	-0.01	40.1	40.1	40.0	40.1	52.08	51.87	03:32:07
89.3	90.3	90.3	90.2	90.5	90.6	90.5	90.8	91.2	90.0	90.4	90.8	90.40	-0.01	40.0	40.2	40.1	40.1	52.24	52.05	03:33:07
89.3	90.3	90.3	90.2	90.5	90.6	90.5	90.8	91.2	90.0	90.4	90.8	90.41	-0.02	40.0	40.3	40.1	40.1	52.12	51.93	03:34:07
89.3	90.4	90.3	90.3	90.5	90.6	90.5	90.9	91.2	90.0	90.4	90.8	90.42	-0.03	40.0	40.1	40.0	40.1	52.16	51.93	03:35:07
89.3	90.4	90.3	90.3	90.5	90.6	90.5	90.8	91.2	90.0	90.4	90.8	90.43	-0.03	39.9	40.1	40.0	40.0	52.08	51.84	03:36:07
89.3	90.4	90.3	90.3	90.5	90.6	90.5	90.8	91.2	90.0	90.4	90.8	90.42	-0.03	40.0	40.2	40.1	40.1	52.16	51.94	03:37:07
89.3	90.4	90.3	90.3	90.5	90.6	90.5	90.8	91.2	90.0	90.4	90.8	90.42	-0.04	40.1	40.1	40.0	40.1	52.08	51.86	03:38:07
89.3	90.4	90.3	90.3	90.5	90.6	90.5	90.8	91.2	90.0	90.4	90.8	90.42	-0.04	40.1	40.2	40.1	40.1	52.16	51.96	03:39:07
89.3	90.4	90.3	90.3	90.5	90.6	90.5	90.8	91.2	90.0	90.4	90.8	90.42	-0.05	40.1	40.1	40.1	40.1	52.16	51.95	03:40:07
89.3	90.4	90.4	90.3	90.5	90.6	90.5	90.9	91.2	90.0	90.5	90.9	90.45	-0.04	40.0	40.1	40.0	40.1	52.16	51.93	03:41:07
89.3	90.4	90.3	90.3	90.5	90.6	90.5	90.8	91.2	90.0	90.5	90.8	90.43	-0.05	40.0	40.2	40.1	40.1	52.08	51.87	03:42:07
89.3	90.4	90.3	90.3	90.5	90.6	90.5	90.9	91.2	90.0	90.5	90.9	90.44	-0.04	40.0	40.2	40.0	40.1	52.20	51.97	03:43:07
89.3	90.4	90.3	90.3	90.5	90.6	90.5	90.8	91.2	90.0	90.4	90.8	90.43	-0.05	40.0	40.2	40.0	40.1	51.92	51.70	03:44:07
89.3	90.4	90.3	90.3	90.5	90.6	90.5	90.9	91.2	90.0	90.4	90.8	90.43	-0.04	40.0	40.2	40.0	40.1	52.24	52.02	03:45:07
89.3	90.4	90.3	90.3	90.5	90.6	90.5	90.9	91.2	90.0	90.5	90.8	90.44	-0.04	40.0	40.0	40.0	40.0	52.16	51.91	03:46:07
89.3	90.4	90.4	90.3	90.5	90.6	90.5	90.9	91.2	90.0	90.5	90.9	90.45	-0.04	40.0	40.1	40.1	40.0	52.12	51.88	03:47:07
89.3	90.4	90.3	90.3	90.5	90.6	90.5	90.9	91.2	90.0	90.5	90.9	90.44	-0.03	40.0	40.1	40.0	40.1	51.68	51.44	03:48:07
89.3	90.4	90.3	90.3	90.5	90.6	90.5	90.8	91.2	90.0	90.4	90.8	90.42	-0.04	40.0	40.1	40.1	40.1	52.00	51.78	03:49:07
89.3	90.3	90.3	90.3	90.5	90.6	90.5	90.8	91.2	90.0	90.4	90.8	90.41	-0.04	40.0	40.2	40.0	40.1	51.92	51.71	03:50:07
89.3	90.4	90.3	90.2	90.5	90.6	90.5	90.8	91.2	90.0	90.4	90.8	90.41	-0.04	40.0	40.1	40.1	40.1	52.08	51.87	03:51:07
89.2	90.3	90.3	90.2	90.5	90.6	90.4	90.8	91.1	90.0	90.4	90.8	90.39	-0.04	39.9	40.2	40.0	40.0	52.08	51.85	03:52:07
89.3	90.3	90.3	90.3	90.5	90.6	90.5	90.8	91.2	90.0	90.4	90.8	90.41	-0.04	40.0	40.2	40.1	40.1	52.12	51.92	03:53:07
89.3	90.3	90.3	90.2	90.5	90.6	90.5	90.8	91.2	90.0	90.4	90.8	90.40	-0.05	40.0	40.3	40.0	40.1	52.04	51.85	03:54:07
89.3	90.4	90.3	90.3	90.5	90.6	90.5	90.8	91.2	90.0	90.4	90.8	90.42	-0.04	40.0	40.3	40.0	40.1	52.08	51.88	03:55:07
89.3	90.3	90.3	90.2	90.5	90.6	90.5	90.8	91.1	90.0	90.4	90.8	90.40	-0.05	40.0	40.2	40.0	40.1	52.04	51.83	03:56:07
89.3	90.4	90.3	90.3	90.5	90.6	90.5	90.8	91.2	90.0	90.4	90.8	90.41	-0.05	40.0	40.1	40.0	40.0	52.08	51.85	03:57:07
89.2	90.3	90.3	90.2	90.4	90.6	90.4	90.8	91.1	89.9	90.4	90.8	90.38	-0.05	40.0	40.2	40.1	40.1	52.04	51.84	03:58:07
89.2	90.3	90.3	90.2	90.4	90.6	90.4	90.8	91.1	89.9	90.4	90.8	90.38	-0.05	40.0	40.3	40.1	40.1	52.08	51.90	03:59:07
89.2	90.3	90.3	90.2	90.4	90.6	90.4	90.8	91.1	89.9	90.4	90.8	90.38	-0.05	40.0	40.1	40.1	40.0	52.12	51.90	04:00:07
89.2	90.3	90.3	90.2	90.4	90.5	90.4	90.8	91.1	89.9	90.4	90.8	90.36	-0.05	40.0	40.2	40.0	40.0	52.04	51.82	04:01:07
89.2	90.3	90.3	90.2	90.4	90.5	90.4	90.8	91.1	89.9	90.4	90.8	90.36	-0.06	40.0	40.1	40.0	40.0	52.00	51.78	04:02:07
89.2	90.3	90.3	90.2	90.4	90.5	90.4	90.8	91.1	89.9	90.4	90.8	90.36	-0.06	40.0	40.1	40.0	40.0	51.96	51.73	04:03:07
89.2	90.3	90.3	90.2	90.4	90.5	90.4	90.8	91.1	89.9	90.4	90.8	90.35	-0.06	40.0	40.1	40.0	40.0	51.92	51.69	04:04:07
89.2	90.3	90.3	90.2	90.4	90.5	90.4	90.8	91.1	89.9	90.4	90.8	90.35	-0.07	40.0	40.1	39.9	40.0	51.92	51.70	04:05:07
89.2	90.3	90.3	90.2	90.4	90.5	90.4	90.8	91.1	89.9	90.4	90.8	90.34	-0.07	40.0	40.2	40.0	40.1	52.04	51.86	04:06:07
89.2	90.3	90.3	90.2	90.4	90.5	90.4	90.8	91.1	89.9	90.4	90.8	90.35	-0.08	40.0	40.1	40.0	40.0	52.08	51.87	04:07:07

COMMENTS _____

Tested By Frank A. Dewey Date 3-10-93 Reviewed By C L Rutledge Date 3-10-93

AMPACITY TEST. JOB NUMBER 93-0501. SAMPLE NUMBER 93-0501-07 DATA FILE ITEM07NO.002 03-11-1993 E-1

POSITION 1			POSITION 2			POSITION 3			POSITION AVERAGE			AVE		AMBIENT TEMPERATURE				AMPS		
Trd1	Tbk1	Twh1	Trd2	Tbk2	Twh2	Trd3	Tbk3	Twh3	Tav1	Tav2	Tav3	Twave	SLOPE	Tam1	Tam2	Tam3	Taav	It	I'	TIME
89.3	90.6	90.7	89.2	89.4	89.1	90.1	90.1	90.2	90.2	89.2	90.1	89.84	-0.10	39.8	40.0	40.0	39.9	52.72	52.93	00:00:10
89.3	90.6	90.7	89.2	89.4	89.1	90.1	90.1	90.2	90.2	89.2	90.1	89.86	-0.09	39.8	39.9	40.0	39.9	52.60	52.80	00:01:10
89.3	90.6	90.7	89.2	89.4	89.1	90.1	90.1	90.2	90.2	89.2	90.1	89.86	-0.09	39.8	40.0	40.0	39.9	52.64	52.85	00:02:10
89.4	90.6	90.7	89.2	89.4	89.1	90.1	90.1	90.2	90.2	89.2	90.1	89.87	-0.08	39.8	39.9	40.0	39.9	52.64	52.82	00:03:10
89.4	90.7	90.8	89.2	89.5	89.1	90.1	90.1	90.2	90.3	89.3	90.2	89.89	-0.08	39.8	39.9	40.0	39.9	52.64	52.81	00:04:10
89.4	90.7	90.8	89.2	89.5	89.1	90.1	90.1	90.2	90.3	89.3	90.1	89.89	-0.07	39.8	39.9	40.0	39.9	52.72	52.90	00:05:10
89.4	90.7	90.8	89.2	89.4	89.1	90.1	90.1	90.2	90.3	89.2	90.1	89.87	-0.06	39.8	39.9	40.0	39.9	52.76	52.95	00:06:10
89.4	90.7	90.8	89.2	89.5	89.1	90.1	90.1	90.2	90.3	89.3	90.2	89.90	-0.05	39.8	40.2	40.0	40.0	52.72	52.94	00:07:10
89.4	90.7	90.8	89.2	89.5	89.1	90.1	90.1	90.3	90.3	89.3	90.2	89.91	-0.04	39.7	40.0	40.0	39.9	52.72	52.91	00:08:10
89.4	90.7	90.8	89.2	89.5	89.1	90.1	90.2	90.2	90.3	89.3	90.2	89.92	-0.03	39.9	40.0	40.0	40.0	52.64	52.86	00:09:10
89.4	90.7	90.8	89.2	89.5	89.1	90.1	90.2	90.3	90.3	89.3	90.2	89.92	-0.03	39.7	39.9	40.0	39.9	52.60	52.76	00:10:10
89.4	90.7	90.8	89.2	89.5	89.1	90.1	90.2	90.3	90.3	89.3	90.2	89.92	-0.02	39.7	39.9	40.0	39.9	52.52	52.68	00:11:10
89.4	90.7	90.8	89.2	89.5	89.1	90.1	90.1	90.2	90.3	89.3	90.2	89.90	-0.02	39.8	39.9	40.0	39.9	52.56	52.76	00:12:10
89.4	90.7	90.8	89.2	89.5	89.1	90.1	90.1	90.3	90.3	89.3	90.2	89.92	-0.02	39.8	40.0	40.0	39.9	52.64	52.83	00:13:10
89.4	90.7	90.8	89.2	89.5	89.1	90.1	90.2	90.3	90.3	89.3	90.2	89.91	-0.01	39.8	40.0	40.0	39.9	52.64	52.82	00:14:10
89.4	90.7	90.8	89.2	89.5	89.1	90.1	90.1	90.2	90.3	89.3	90.2	89.91	-0.01	39.8	39.9	40.0	39.9	52.56	52.73	00:15:10
89.4	90.7	90.8	89.2	89.5	89.1	90.2	90.2	90.3	90.3	89.3	90.2	89.93	-0.01	39.7	40.0	40.0	39.9	52.76	52.93	00:16:10
89.4	90.7	90.8	89.3	89.5	89.2	90.2	90.2	90.3	90.3	89.3	90.2	89.94	-0.00	39.7	40.0	40.0	39.9	52.56	52.74	00:17:10
89.4	90.7	90.8	89.3	89.5	89.2	90.2	90.2	90.3	90.3	89.3	90.2	89.97	0.00	39.7	40.0	40.0	39.9	52.84	52.99	00:18:10
89.5	90.8	90.9	89.3	89.6	89.2	90.2	90.2	90.3	90.4	89.3	90.2	89.98	0.02	39.7	40.0	40.0	39.9	52.80	52.94	00:19:10
89.5	90.8	90.9	89.3	89.6	89.2	90.2	90.2	90.3	90.4	89.3	90.2	89.99	0.03	39.7	39.9	40.0	39.9	52.60	52.74	00:20:10
89.5	90.8	90.9	89.3	89.6	89.2	90.2	90.2	90.3	90.4	89.4	90.3	89.99	0.04	39.7	39.9	40.0	39.9	52.36	52.48	00:21:10
89.4	90.7	90.8	89.3	89.5	89.2	90.2	90.2	90.3	90.3	89.3	90.2	89.96	0.05	39.8	39.9	40.0	39.9	52.36	52.51	00:22:10
89.4	90.7	90.8	89.2	89.5	89.2	90.2	90.2	90.3	90.3	89.3	90.2	89.94	0.05	39.7	39.9	40.0	39.9	52.36	52.52	00:23:10
89.4	90.7	90.8	89.3	89.5	89.1	90.2	90.2	90.3	90.3	89.3	90.2	89.94	0.06	39.7	39.9	40.0	39.8	52.48	52.62	00:24:10
89.4	90.7	90.8	89.2	89.5	89.1	90.2	90.2	90.3	90.3	89.3	90.2	89.93	0.06	39.8	39.9	40.0	39.9	52.32	52.48	00:25:10
89.4	90.7	90.8	89.2	89.5	89.1	90.1	90.1	90.2	90.3	89.3	90.2	89.90	0.06	39.7	39.9	40.0	39.9	52.40	52.57	00:26:10
89.4	90.7	90.8	89.2	89.5	89.1	90.1	90.1	90.2	90.3	89.3	90.2	89.91	0.06	39.7	40.0	40.0	39.9	52.20	52.38	00:27:10
89.4	90.7	90.8	89.2	89.4	89.1	90.1	90.1	90.2	90.3	89.2	90.1	89.88	0.06	39.7	39.9	39.9	39.9	52.32	52.49	00:28:10
89.3	90.6	90.7	89.2	89.4	89.1	90.1	90.1	90.2	90.2	89.2	90.1	89.85	0.06	39.7	39.9	40.0	39.8	52.12	52.30	00:29:10
89.3	90.6	90.7	89.2	89.4	89.1	90.1	90.1	90.2	90.2	89.2	90.1	89.85	0.05	39.7	39.9	40.0	39.9	52.36	52.55	00:30:10
89.3	90.6	90.7	89.2	89.4	89.1	90.1	90.1	90.2	90.2	89.2	90.1	89.85	0.04	39.7	39.9	39.9	39.8	52.28	52.45	00:31:10
89.3	90.6	90.7	89.2	89.4	89.1	90.1	90.1	90.2	90.2	89.2	90.1	89.84	0.03	39.7	39.9	40.0	39.9	52.44	52.63	00:32:10
89.3	90.6	90.7	89.1	89.4	89.0	90.1	90.1	90.2	90.2	89.2	90.1	89.83	0.03	39.7	39.9	40.0	39.9	52.40	52.60	00:33:10
89.3	90.6	90.7	89.1	89.4	89.0	90.1	90.1	90.2	90.2	89.2	90.1	89.83	0.02	39.7	40.0	39.9	39.9	51.84	52.02	00:34:10
89.3	90.6	90.7	89.2	89.4	89.1	90.1	90.1	90.2	90.2	89.2	90.1	89.85	0.02	39.7	39.9	39.9	39.8	52.56	52.74	00:35:10
89.4	90.6	90.7	89.2	89.4	89.1	90.1	90.1	90.2	90.2	89.2	90.1	89.87	0.02	39.7	39.9	39.9	39.8	52.60	52.76	00:36:10
89.3	90.6	90.7	89.2	89.4	89.1	90.1	90.1	90.2	90.2	89.2	90.1	89.86	0.01	39.7	39.9	39.9	39.8	52.52	52.69	00:37:10
89.4	90.7	90.8	89.2	89.4	89.1	90.1	90.1	90.2	90.3	89.2	90.1	89.87	0.02	39.7	39.9	39.9	39.9	52.72	52.90	00:38:10
89.4	90.7	90.8	89.2	89.5	89.1	90.1	90.1	90.2	90.3	89.3	90.2	89.89	0.02	39.7	40.0	40.0	39.9	52.68	52.87	00:39:10
89.4	90.7	90.8	89.2	89.5	89.1	90.1	90.1	90.2	90.3	89.3	90.2	89.90	0.02	39.7	39.9	40.0	39.8	52.72	52.88	00:40:10
89.4	90.7	90.8	89.2	89.5	89.1	90.1	90.1	90.2	90.3	89.3	90.2	89.90	0.03	39.7	39.9	40.0	39.8	52.60	52.75	00:41:10
89.4	90.7	90.8	89.2	89.5	89.1	90.1	90.1	90.2	90.3	89.3	90.2	89.90	0.03	39.7	39.9	40.0	39.8	52.56	52.71	00:42:10
89.4	90.7	90.8	89.2	89.5	89.1	90.1	90.1	90.2	90.3	89.3	90.2	89.90	0.03	39.7	39.9	39.9	39.8	52.48	52.62	00:43:10
89.4	90.7	90.8	89.2	89.5	89.1	90.1	90.1	90.2	90.3	89.3	90.2	89.89	0.03	39.7	39.8	39.9	39.8	52.40	52.54	00:44:10
89.4	90.7	90.8	89.2	89.4	89.1	90.1	90.1	90.2	90.3	89.3	90.2	89.89	0.03	39.7	39.8	39.9	39.8	52.40	52.55	00:45:10
89.4	90.7	90.8	89.2	89.4	89.1	90.1	90.1	90.2	90.3	89.2	90.1	89.88	0.03	39.7	39.9	40.0	39.9	52.52	52.69	00:46:10
89.3	90.6	90.7	89.2	89.4	89.1	90.1	90.1	90.2	90.2	89.2	90.1	89.84	0.02	39.7	39.9	40.0	39.8	52.56	52.74	00:47:10
89.4	90.6	90.7	89.2	89.4	89.1	90.1	90.1	90.2	90.3	89.2	90.1	89.87	0.02	39.7	39.9	40.0	39.8	52.28	52.45	00:48:10
89.4	90.6	90.8	89.2	89.4	89.1	90.1	90.1	90.2	90.3	89.2	90.1	89.88	0.02	39.8	39.9	39.9	39.8	52.52	52.69	00:49:10
89.3	90.6	90.7	89.2	89.4	89.1	90.1	90.1	90.2	90.2	89.2	90.1	89.86	0.01	39.7	39.8	39.9	39.8	52.60	52.75	00:50:10
89.3	90.6	90.7	89.2	89.4	89.1	90.1	90.1	90.2	90.2	89.2	90.1	89.86	0.01	39.7	39.9	40.0	39.8	52.60	52.77	00:51:10
89.4	90.6	90.7	89.2	89.4	89.1	90.1	90.1	90.2	90.2	89.2	90.1	89.87	0.00	39.7	39.9	39.9	39.8	52.60	52.75	00:52:10
89.3	90.6	90.7	89.2	89.4	89.1	90.1	90.1	90.2	90.2	89.2	90.1	89.85	-0.01	39.7	39.9	39.9	39.8	52.40	52.57	00:53:10
89.4	90.6	90.7	89.2	89.4	89.1	90.1	90.1	90.2	90.2	89.2	90.1	89.86	-0.02	39.6	39.8	39.9	39.8	52.48	52.62	00:54:10
89.4	90.7	90.8	89.2	89.5	89.1	90.1	90.1	90.2	90.3	89.3	90.2	89.89	-0.02	39.6	40.0	39.9	39.9	52.68	52.85	00:55:10
89.4	90.6	90.8	89.2	89.4	89.1	90.1	90.1	90.2	90.3	89.2	90.1	89.88	-0.03	39.7	39.9	39.9	39.8	52.68	52.83	00:56:10
89.4	90.6	90.8	89.2	89.4	89.1	90.1	90.1	90.2	90.3	89.2	90.1	89.87	-0.03	39.6	39.9	39.9	39.8	52.64	52.79	00:57:10
89.4	90.7	90.8	89.2	89.5	89.1	90.1	90.1	90.2	90.3	89.3	90.2	89.90	-0.04	39.7	39.8	39.9	39.8	52.68	52.81	00:58:10
89.4	90.7	90.8	89.2	89.5	89.1	90.1	90.1	90.2	90.3	89.3	90.2	89.90	-0.04	39.7	39.9	39.9	39.8	52.64	52.79	00:59:10

COMMENTS 3 CONDUCTOR, 6 AWG, 1" CONDUIT, ½ THERMOLAC + ½ UPGRADE

Tested By Frank A. Denney Date 3-12-93 Reviewed By C.L. Pittledge Date 3-12-93

AMPACITY TEST. JOB NUMBER 93-0501. SAMPLE NUMBER 93-0501-07 DATA FILE ITEM07NO.002 03-12-1993 E-2C

POSITION 1			POSITION 2			POSITION 3			POSITION AVERAGE			AVE		AMBIENT TEMPERATURE				AMPS		
Trd1	Tbk1	Twh1	Trd2	Tbk2	Twh2	Trd3	Tbk3	Twh3	Tav1	Tav2	Tav3	Twave	SLOPE	Tam1	Tam2	Tam3	Taav	It	I'	TIME
89.4	90.7	90.8	89.2	89.5	89.1	90.1	90.2	90.2	90.3	89.3	90.2	89.91	-0.04	39.6	39.9	40.0	39.8	52.36	52.50	01:00:10
89.4	90.7	90.8	89.2	89.4	89.1	90.1	90.1	90.2	90.3	89.3	90.1	89.89	-0.05	39.7	39.9	39.9	39.8	52.28	52.43	01:01:10
89.4	90.7	90.8	89.2	89.5	89.1	90.1	90.1	90.2	90.3	89.3	90.2	89.89	-0.05	39.6	39.9	40.0	39.8	52.64	52.80	01:02:10
89.4	90.7	90.8	89.2	89.5	89.1	90.1	90.1	90.2	90.3	89.3	90.2	89.90	-0.05	39.6	39.8	39.9	39.8	52.68	52.80	01:03:10
89.4	90.7	90.8	89.2	89.5	89.1	90.1	90.2	90.2	90.3	89.3	90.2	89.90	-0.05	39.7	39.9	39.9	39.8	52.52	52.67	01:04:10
89.4	90.7	90.8	89.2	89.4	89.1	90.1	90.1	90.2	90.3	89.2	90.1	89.89	-0.05	39.7	39.8	39.9	39.8	52.52	52.67	01:05:10
89.4	90.7	90.8	89.2	89.4	89.1	90.1	90.1	90.2	90.3	89.3	90.1	89.89	-0.06	39.7	39.8	39.9	39.8	52.56	52.71	01:06:10
89.4	90.6	90.7	89.2	89.4	89.1	90.1	90.1	90.2	90.3	89.2	90.1	89.87	-0.06	39.7	39.8	39.9	39.8	52.48	52.63	01:07:10
89.4	90.6	90.7	89.2	89.4	89.1	90.1	90.1	90.2	90.3	89.2	90.1	89.88	-0.06	39.6	39.8	39.9	39.8	52.52	52.65	01:08:10
89.4	90.7	90.7	89.2	89.4	89.1	90.1	90.1	90.2	90.3	89.2	90.1	89.88	-0.06	39.6	40.0	39.9	39.8	52.52	52.68	01:09:10
89.4	90.7	90.8	89.2	89.5	89.1	90.1	90.1	90.2	90.3	89.3	90.2	89.89	-0.05	39.6	39.9	39.9	39.8	52.60	52.74	01:10:10
89.4	90.7	90.7	89.2	89.5	89.1	90.1	90.1	90.2	90.3	89.3	90.1	89.89	-0.05	39.6	39.8	39.9	39.8	52.48	52.61	01:11:10
89.3	90.6	90.7	89.2	89.4	89.1	90.1	90.1	90.2	90.2	89.2	90.1	89.86	-0.05	39.6	39.8	39.9	39.8	52.20	52.33	01:12:10
89.3	90.6	90.7	89.1	89.4	89.1	90.1	90.1	90.2	90.2	89.2	90.1	89.84	-0.06	39.6	39.8	39.9	39.8	52.44	52.57	01:13:10
89.4	90.6	90.7	89.2	89.4	89.1	90.1	90.1	90.2	90.2	89.2	90.1	89.87	-0.06	39.6	39.9	39.8	39.8	52.36	52.49	01:14:10
89.3	90.6	90.7	89.1	89.4	89.1	90.1	90.1	90.2	90.2	89.2	90.1	89.84	-0.06	39.6	39.8	39.8	39.8	52.48	52.61	01:15:10
89.3	90.6	90.7	89.2	89.4	89.1	90.1	90.1	90.2	90.2	89.2	90.1	89.86	-0.06	39.6	39.8	39.8	39.8	52.52	52.66	01:16:10
89.4	90.6	90.8	89.2	89.4	89.1	90.1	90.1	90.2	90.3	89.2	90.1	89.88	-0.06	39.7	39.8	39.8	39.8	52.76	52.89	01:17:10
89.4	90.7	90.8	89.2	89.5	89.1	90.1	90.1	90.2	90.3	89.3	90.2	89.90	-0.05	39.7	39.8	39.9	39.8	52.64	52.77	01:18:10
89.4	90.7	90.8	89.2	89.5	89.1	90.1	90.1	90.2	90.3	89.3	90.2	89.90	-0.03	39.6	39.8	39.9	39.8	52.64	52.76	01:19:10
89.4	90.7	90.8	89.2	89.5	89.1	90.1	90.1	90.2	90.3	89.3	90.2	89.90	-0.02	39.6	39.8	39.9	39.8	52.68	52.79	01:20:10
89.4	90.7	90.8	89.2	89.5	89.1	90.1	90.2	90.2	90.3	89.3	90.2	89.92	-0.01	39.7	39.8	39.9	39.8	52.72	52.83	01:21:10
89.4	90.7	90.8	89.2	89.5	89.1	90.1	90.2	90.3	90.3	89.3	90.2	89.92	0.00	39.6	39.8	39.8	39.8	52.52	52.62	01:22:10
89.4	90.7	90.8	89.2	89.5	89.1	90.1	90.2	90.3	90.3	89.3	90.2	89.92	0.01	39.6	39.8	39.8	39.8	52.64	52.74	01:23:10
89.4	90.7	90.8	89.2	89.5	89.1	90.1	90.2	90.3	90.3	89.3	90.2	89.92	0.02	39.6	39.8	39.8	39.7	52.32	52.41	01:24:10
89.4	90.7	90.8	89.2	89.5	89.1	90.1	90.2	90.2	90.3	89.3	90.2	89.90	0.03	39.6	39.8	39.8	39.7	52.56	52.66	01:25:10
89.4	90.7	90.8	89.2	89.5	89.1	90.1	90.2	90.3	90.3	89.3	90.2	89.92	0.04	39.6	39.8	39.8	39.8	52.52	52.62	01:26:10
89.4	90.7	90.8	89.2	89.5	89.1	90.1	90.2	90.3	90.3	89.3	90.2	89.91	0.04	39.6	39.8	39.9	39.8	52.52	52.63	01:27:10
89.4	90.7	90.8	89.2	89.5	89.1	90.1	90.1	90.2	90.3	89.3	90.2	89.89	0.04	39.6	39.9	39.9	39.8	52.52	52.64	01:28:10
89.4	90.7	90.8	89.2	89.5	89.1	90.1	90.1	90.2	90.3	89.3	90.2	89.90	0.04	39.6	39.8	39.8	39.8	52.56	52.66	01:29:10
89.4	90.7	90.8	89.2	89.5	89.1	90.1	90.1	90.3	90.3	89.3	90.2	89.91	0.04	39.6	39.9	39.9	39.8	52.44	52.57	01:30:10
89.4	90.7	90.8	89.2	89.5	89.1	90.1	90.1	90.2	90.3	89.3	90.2	89.89	0.04	39.7	39.8	39.9	39.8	52.52	52.65	01:31:10
89.4	90.6	90.7	89.2	89.4	89.1	90.1	90.1	90.2	90.2	89.2	90.1	89.87	0.04	39.7	39.8	39.9	39.8	52.36	52.49	01:32:10
89.4	90.7	90.8	89.2	89.5	89.1	90.1	90.1	90.2	90.3	89.3	90.2	89.89	0.03	39.6	39.8	39.8	39.7	52.48	52.58	01:33:10
89.4	90.7	90.7	89.2	89.4	89.1	90.1	90.1	90.2	90.3	89.2	90.1	89.87	0.02	39.6	39.7	39.9	39.7	52.52	52.63	01:34:10
89.4	90.7	90.8	89.2	89.5	89.1	90.1	90.1	90.2	90.3	89.3	90.1	89.89	0.02	39.6	39.8	39.9	39.8	52.64	52.76	01:35:10
89.4	90.7	90.8	89.2	89.5	89.1	90.1	90.2	90.2	90.3	89.3	90.2	89.91	0.02	39.6	39.8	39.9	39.8	52.64	52.74	01:36:10
89.4	90.7	90.8	89.2	89.5	89.1	90.1	90.2	90.2	90.3	89.3	90.2	89.92	0.02	39.6	39.8	39.8	39.7	52.64	52.73	01:37:10
89.4	90.7	90.8	89.2	89.5	89.1	90.1	90.1	90.2	90.3	89.2	90.2	89.89	0.02	39.6	39.8	39.9	39.8	52.60	52.71	01:38:10
89.4	90.7	90.8	89.2	89.5	89.1	90.1	90.1	90.2	90.3	89.3	90.2	89.89	0.02	39.7	39.8	39.9	39.8	52.60	52.74	01:39:10
89.4	90.7	90.8	89.2	89.5	89.2	90.2	90.2	90.3	90.3	89.3	90.2	89.94	0.03	39.6	39.8	39.9	39.7	52.64	52.73	01:40:10
89.4	90.7	90.8	89.3	89.5	89.2	90.2	90.2	90.3	90.3	89.3	90.2	89.95	0.03	39.6	39.8	39.8	39.8	52.80	52.89	01:41:10
89.4	90.7	90.8	89.3	89.5	89.2	90.2	90.2	90.3	90.3	89.3	90.2	89.95	0.04	39.6	39.8	39.9	39.8	52.64	52.73	01:42:10
89.5	90.7	90.8	89.3	89.5	89.2	90.2	90.2	90.3	90.3	89.3	90.2	89.97	0.05	39.6	39.8	39.9	39.8	52.64	52.73	01:43:10
89.4	90.7	90.8	89.3	89.5	89.2	90.2	90.2	90.3	90.3	89.3	90.2	89.95	0.06	39.6	39.9	39.9	39.8	52.72	52.83	01:44:10
89.4	90.8	90.8	89.3	89.5	89.2	90.2	90.2	90.3	90.3	89.3	90.2	89.97	0.06	39.6	39.8	39.8	39.8	52.76	52.83	01:45:10
89.5	90.7	90.8	89.3	89.5	89.2	90.2	90.2	90.3	90.3	89.3	90.2	89.97	0.07	39.6	39.8	39.8	39.7	52.76	52.82	01:46:10
89.5	90.8	90.8	89.3	89.6	89.2	90.2	90.2	90.3	90.4	89.3	90.2	89.98	0.07	39.6	39.8	39.8	39.7	52.72	52.78	01:47:10
89.5	90.8	90.9	89.3	89.6	89.2	90.2	90.2	90.3	90.4	89.4	90.3	89.99	0.08	39.6	39.8	39.8	39.7	52.76	52.80	01:48:10
89.4	90.7	90.8	89.3	89.6	89.2	90.2	90.2	90.3	90.3	89.3	90.2	89.97	0.08	39.5	39.8	39.8	39.7	52.72	52.77	01:49:10
89.4	90.7	90.8	89.3	89.6	89.2	90.2	90.2	90.3	90.3	89.3	90.2	89.97	0.09	39.5	39.8	39.9	39.7	52.60	52.66	01:50:10
89.5	90.8	90.9	89.3	89.6	89.2	90.2	90.2	90.3	90.4	89.3	90.2	89.98	0.09	39.5	39.8	39.8	39.7	52.68	52.72	01:51:10
89.5	90.8	90.8	89.3	89.6	89.2	90.2	90.2	90.3	90.4	89.3	90.2	89.98	0.09	39.6	39.8	39.9	39.7	52.64	52.70	01:52:10
89.5	90.8	90.8	89.3	89.6	89.2	90.2	90.2	90.3	90.4	89.3	90.2	89.98	0.10	39.6	39.8	39.8	39.7	52.52	52.57	01:53:10
89.5	90.8	90.9	89.3	89.5	89.2	90.2	90.2	90.3	90.4	89.3	90.2	89.98	0.10	39.6	39.7	39.8	39.7	52.60	52.64	01:54:10
89.4	90.7	90.8	89.3	89.5	89.2	90.2	90.2	90.3	90.3	89.3	90.2	89.95	0.10	39.6	39.8	39.8	39.7	52.64	52.71	01:55:10
89.5	90.8	90.9	89.3	89.5	89.2	90.2	90.2	90.3	90.4	89.3	90.2	89.98	0.10	39.5	39.8	39.8	39.7	52.64	52.70	01:56:10
89.5	90.8	90.9	89.3	89.5	89.2	90.2	90.2	90.3	90.4	89.3	90.2	89.98	0.11	39.6	39.8	39.8	39.7	52.64	52.70	01:57:10
89.5	90.8	90.9	89.3	89.5	89.2	90.2	90.2	90.3	90.4	89.3	90.2	89.98	0.11	39.6	39.8	39.8	39.7	52.60	52.65	01:58:10
89.5	90.7	90.8	89.3	89.5	89.2	90.2	90.2	90.3	90.3	89.3	90.2	89.96	0.11	39.6	39.8	39.8	39.7	52.56	52.63	01:59:10

COMMENTS _____

Tested By Frank A. Deimy Date 3-12-93 Reviewed By C.L. Rutledge Date 3-12-93

AMPACITY TEST. JOB NUMBER 93-0501. SAMPLE NUMBER 93-0501-07 DATA FILE ITEM07NO.002 03-12-1993

POSITION 1			POSITION 2			POSITION 3			POSITION AVERAGE			AVE		AMBIENT TEMPERATURE				AMPS		
Trd1	Tbk1	Twh1	Trd2	Tbk2	Twh2	Trd3	Tbk3	Twh3	Tav1	Tav2	Tav3	Twave	SLOPE	Tam1	Tam2	Tam3	Taav	It	I'	TIME
89.4	90.7	90.8	89.3	89.5	89.1	90.2	90.2	90.3	90.3	89.3	90.2	89.94	0.12	39.6	39.8	39.8	39.7	52.48	52.56	02:00:10
89.4	90.7	90.8	89.3	89.5	89.2	90.2	90.2	90.3	90.3	89.3	90.2	89.94	0.11	39.6	39.8	39.8	39.7	52.36	52.44	02:01:10
89.4	90.7	90.8	89.3	89.5	89.2	90.2	90.2	90.3	90.3	89.3	90.2	89.95	0.12	39.6	39.8	39.8	39.7	52.52	52.57	02:02:10
89.4	90.7	90.8	89.3	89.5	89.2	90.2	90.2	90.3	90.3	89.3	90.2	89.95	0.12	39.5	39.8	39.8	39.7	52.64	52.71	02:03:10
89.4	90.7	90.8	89.3	89.5	89.2	90.2	90.2	90.3	90.3	89.3	90.2	89.96	0.12	39.5	39.8	39.8	39.7	52.64	52.68	02:04:10
89.4	90.7	90.8	89.3	89.5	89.2	90.2	90.2	90.3	90.3	89.3	90.2	89.96	0.12	39.5	39.8	39.8	39.7	52.76	52.81	02:05:10
89.5	90.8	90.9	89.3	89.6	89.2	90.2	90.2	90.3	90.4	89.3	90.2	89.98	0.12	39.5	39.8	39.9	39.7	52.72	52.78	02:06:10
89.5	90.7	90.8	89.3	89.6	89.2	90.2	90.2	90.3	90.3	89.3	90.2	89.97	0.12	39.5	39.8	39.8	39.7	52.48	52.54	02:07:10
89.5	90.8	90.8	89.3	89.5	89.2	90.2	90.2	90.3	90.4	89.3	90.2	89.97	0.12	39.6	39.7	39.8	39.7	52.76	52.81	02:08:10
89.5	90.8	90.9	89.3	89.6	89.2	90.2	90.2	90.3	90.4	89.3	90.2	89.98	0.12	39.5	39.8	39.8	39.7	52.68	52.73	02:09:10
89.5	90.8	90.9	89.3	89.6	89.2	90.2	90.3	90.3	90.4	89.4	90.3	90.01	0.12	39.5	39.8	39.8	39.7	52.76	52.79	02:10:10
89.5	90.8	90.9	89.3	89.6	89.2	90.2	90.2	90.3	90.4	89.4	90.2	89.99	0.13	39.5	39.8	39.8	39.7	52.36	52.41	02:11:10
89.5	90.8	90.9	89.3	89.6	89.2	90.2	90.2	90.3	90.4	89.3	90.2	89.99	0.12	39.6	39.8	39.8	39.7	52.44	52.49	02:12:10
89.5	90.8	90.9	89.3	89.6	89.2	90.2	90.2	90.3	90.4	89.3	90.3	89.99	0.12	39.6	39.8	39.8	39.7	52.56	52.63	02:13:10
89.5	90.8	90.9	89.3	89.6	89.2	90.2	90.2	90.3	90.4	89.4	90.2	89.99	0.12	39.6	39.7	39.9	39.7	52.64	52.69	02:14:10
89.5	90.8	90.9	89.3	89.6	89.2	90.2	90.2	90.3	90.4	89.4	90.3	90.00	0.11	39.6	39.8	39.8	39.7	52.60	52.65	02:15:10
89.5	90.8	90.9	89.3	89.6	89.2	90.2	90.2	90.3	90.4	89.3	90.2	89.98	0.11	39.5	39.7	39.8	39.7	52.68	52.73	02:16:10
89.5	90.8	90.9	89.3	89.6	89.2	90.2	90.2	90.3	90.4	89.4	90.3	89.99	0.11	39.5	39.8	39.8	39.7	52.52	52.56	02:17:10
89.5	90.8	90.9	89.3	89.6	89.2	90.2	90.2	90.3	90.4	89.3	90.3	89.99	0.11	39.5	39.8	39.8	39.7	52.52	52.55	02:18:10
89.5	90.8	90.9	89.3	89.6	89.2	90.2	90.2	90.3	90.4	89.4	90.3	90.00	0.11	39.5	39.8	39.8	39.7	52.56	52.60	02:19:10
89.5	90.8	90.9	89.3	89.6	89.2	90.2	90.2	90.3	90.4	89.3	90.3	89.99	0.11	39.6	39.7	39.8	39.7	52.64	52.68	02:20:10
89.5	90.8	90.9	89.3	89.6	89.2	90.2	90.2	90.3	90.4	89.3	90.2	89.98	0.11	39.5	39.8	39.8	39.7	52.40	52.45	02:21:10
89.5	90.8	90.9	89.3	89.6	89.2	90.2	90.2	90.3	90.4	89.3	90.3	89.99	0.11	39.6	39.8	39.9	39.7	52.48	52.54	02:22:10
89.5	90.7	90.8	89.3	89.6	89.2	90.2	90.2	90.3	90.4	89.3	90.2	89.97	0.10	39.5	39.7	39.8	39.7	52.48	52.51	02:23:10
89.5	90.8	90.8	89.3	89.5	89.2	90.2	90.2	90.3	90.4	89.3	90.2	89.97	0.10	39.5	39.7	39.8	39.7	52.48	52.52	02:24:10
89.5	90.8	90.9	89.3	89.6	89.2	90.2	90.2	90.3	90.4	89.3	90.2	89.98	0.10	39.6	39.7	39.8	39.7	52.60	52.64	02:25:10
89.5	90.8	90.8	89.3	89.6	89.2	90.2	90.2	90.3	90.4	89.3	90.2	89.98	0.10	39.5	39.7	39.8	39.7	52.64	52.67	02:26:10
89.5	90.8	90.8	89.3	89.5	89.2	90.2	90.2	90.3	90.3	89.3	90.2	89.97	0.10	39.6	39.7	39.8	39.7	52.60	52.65	02:27:10
89.4	90.7	90.8	89.3	89.5	89.2	90.2	90.2	90.3	90.3	89.3	90.2	89.96	0.09	39.5	39.8	39.8	39.7	52.72	52.78	02:28:10
89.5	90.8	90.8	89.3	89.5	89.2	90.2	90.2	90.3	90.4	89.3	90.2	89.98	0.08	39.6	39.7	39.8	39.7	52.72	52.76	02:29:10
89.5	90.8	90.9	89.3	89.6	89.2	90.2	90.2	90.3	90.4	89.4	90.3	90.00	0.08	39.5	39.7	39.8	39.7	52.56	52.58	02:30:10
89.5	90.7	90.8	89.3	89.5	89.2	90.2	90.2	90.3	90.3	89.3	90.2	89.97	0.08	39.5	39.7	39.8	39.7	52.60	52.64	02:31:10
89.5	90.8	90.8	89.3	89.6	89.2	90.2	90.2	90.3	90.4	89.3	90.2	89.98	0.07	39.5	39.8	39.8	39.7	52.36	52.40	02:32:10
89.4	90.7	90.8	89.3	89.5	89.2	90.2	90.2	90.3	90.3	89.3	90.2	89.96	0.06	39.6	39.8	39.8	39.7	52.36	52.41	02:33:10
89.4	90.7	90.8	89.3	89.5	89.2	90.1	90.2	90.3	90.3	89.3	90.2	89.94	0.05	39.5	39.7	39.8	39.7	52.48	52.52	02:34:10
89.4	90.7	90.8	89.2	89.5	89.1	90.2	90.2	90.3	90.3	89.3	90.2	89.94	0.04	39.5	39.7	39.8	39.7	52.40	52.45	02:35:10
89.4	90.7	90.8	89.2	89.5	89.1	90.1	90.2	90.3	90.3	89.3	90.2	89.94	0.03	39.5	39.7	39.7	39.7	52.52	52.55	02:36:10
89.4	90.7	90.8	89.2	89.5	89.2	90.2	90.2	90.3	90.3	89.3	90.2	89.94	0.02	39.5	39.7	39.7	39.6	52.36	52.39	02:37:10
89.4	90.7	90.8	89.2	89.5	89.2	90.2	90.2	90.3	90.3	89.3	90.2	89.94	0.01	39.5	39.7	39.7	39.6	52.48	52.51	02:38:10
89.4	90.7	90.8	89.2	89.5	89.2	90.2	90.2	90.3	90.3	89.3	90.2	89.94	-0.00	39.5	39.8	39.8	39.7	52.52	52.56	02:39:10
89.4	90.7	90.8	89.2	89.5	89.1	90.1	90.2	90.3	90.3	89.3	90.2	89.92	-0.01	39.5	39.7	39.8	39.7	52.48	52.52	02:40:10
89.4	90.7	90.8	89.2	89.5	89.1	90.1	90.1	90.2	90.3	89.3	90.2	89.91	-0.02	39.5	39.7	39.8	39.7	52.48	52.53	02:41:10
89.4	90.7	90.8	89.2	89.5	89.1	90.1	90.1	90.2	90.3	89.3	90.2	89.91	-0.02	39.5	39.7	39.8	39.7	52.44	52.49	02:42:10
89.4	90.7	90.8	89.2	89.5	89.1	90.1	90.1	90.2	90.3	89.3	90.2	89.90	-0.03	39.5	39.7	39.8	39.7	52.48	52.53	02:43:10
89.4	90.7	90.8	89.2	89.5	89.1	90.1	90.1	90.2	90.3	89.3	90.1	89.89	-0.04	39.5	39.7	39.8	39.7	52.40	52.46	02:44:10
89.4	90.7	90.8	89.2	89.5	89.1	90.1	90.1	90.2	90.3	89.3	90.2	89.90	-0.05	39.5	39.7	39.7	39.6	52.60	52.65	02:45:10
89.4	90.7	90.8	89.2	89.5	89.1	90.1	90.2	90.2	90.3	89.3	90.2	89.91	-0.05	39.4	39.7	39.7	39.6	52.48	52.51	02:46:10
89.4	90.7	90.8	89.2	89.5	89.1	90.1	90.1	90.2	90.3	89.3	90.2	89.90	-0.06	39.5	39.7	39.7	39.6	52.52	52.55	02:47:10
89.4	90.7	90.8	89.2	89.5	89.1	90.1	90.1	90.2	90.3	89.3	90.2	89.89	-0.06	39.5	39.7	39.7	39.6	52.40	52.44	02:48:10
89.4	90.7	90.8	89.2	89.5	89.1	90.1	90.2	90.2	90.3	89.3	90.2	89.91	-0.06	39.4	39.7	39.8	39.6	52.64	52.68	02:49:10
89.4	90.7	90.8	89.2	89.5	89.1	90.1	90.2	90.3	90.3	89.3	90.2	89.93	-0.07	39.5	39.7	39.7	39.6	52.52	52.55	02:50:10
89.4	90.7	90.8	89.2	89.5	89.1	90.1	90.1	90.3	90.3	89.3	90.2	89.92	-0.07	39.6	39.7	39.7	39.7	52.72	52.77	02:51:10
89.4	90.7	90.8	89.3	89.5	89.2	90.2	90.2	90.3	90.3	89.3	90.2	89.94	-0.07	39.4	39.7	39.8	39.6	52.60	52.62	02:52:10
89.4	90.7	90.8	89.2	89.5	89.1	90.1	90.2	90.3	90.3	89.3	90.2	89.93	-0.07	39.5	39.8	39.8	39.7	52.64	52.68	02:53:10
89.4	90.7	90.8	89.3	89.5	89.2	90.2	90.2	90.3	90.3	89.3	90.2	89.95	-0.07	39.5	39.7	39.8	39.7	52.60	52.64	02:54:10
89.4	90.7	90.8	89.3	89.5	89.2	90.2	90.2	90.3	90.3	89.3	90.2	89.95	-0.07	39.5	39.7	39.8	39.7	52.60	52.64	02:55:10
89.4	90.7	90.8	89.2	89.5	89.1	90.2	90.2	90.3	90.3	89.3	90.2	89.93	-0.07	39.4	39.7	39.7	39.6	52.48	52.50	02:56:10
89.4	90.7	90.8	89.3	89.5	89.2	90.2	90.2	90.3	90.3	89.3	90.2	89.95	-0.07	39.5	39.7	39.7	39.6	52.48	52.51	02:57:10
89.4	90.7	90.8	89.2	89.5	89.1	90.2	90.2	90.3	90.3	89.3	90.2	89.93	-0.07	39.5	39.7	39.7	39.6	52.32	52.35	02:58:10
89.4	90.7	90.8	89.2	89.5	89.1	90.1	90.1	90.2	90.3	89.3	90.2	89.91	-0.07	39.5	39.7	39.8	39.6	52.44	52.48	02:59:10

COMMENTS _____

Tested By Frank A. Dumey Date 3-12-93 Reviewed By C.L. Pitchedy Date 3-12-93

POSITION 1			POSITION 2			POSITION 3			POSITION AVERAGE			AVE		AMBIENT TEMPERATURE				AMPS		
Trd1	Tbk1	Twh1	Trd2	Tbk2	Twh2	Trd3	Tbk3	Twh3	Tav1	Tav2	Tav3	Twave	SLOPE	Tam1	Tam2	Tam3	Taav	It	I'	TIME
89.3	90.7	90.5	89.2	89.5	89.6	90.5	90.1	90.9	90.2	89.4	90.5	90.05	-0.00	40.8	40.9	40.9	40.9	53.56	54.23	13:21:08
89.3	90.7	90.5	89.2	89.5	89.6	90.5	90.1	90.9	90.2	89.4	90.5	90.04	-0.01	40.8	40.9	40.8	40.8	53.64	54.29	13:22:08
89.3	90.7	90.6	89.2	89.5	89.6	90.5	90.1	90.9	90.2	89.4	90.5	90.05	-0.02	40.8	40.8	40.8	40.8	53.64	54.27	13:23:08
89.4	90.7	90.6	89.2	89.5	89.6	90.5	90.2	91.0	90.2	89.4	90.5	90.06	-0.02	40.8	40.8	40.8	40.8	53.56	54.16	13:24:08
89.3	90.7	90.6	89.2	89.5	89.6	90.5	90.2	91.0	90.2	89.4	90.5	90.06	-0.02	40.7	40.8	40.7	40.7	53.64	54.23	13:25:08
89.4	90.7	90.6	89.2	89.5	89.6	90.5	90.1	91.0	90.2	89.4	90.5	90.06	-0.02	40.7	40.7	40.7	40.7	53.52	54.07	13:26:08
89.3	90.7	90.5	89.2	89.5	89.6	90.5	90.1	90.9	90.2	89.4	90.5	90.04	-0.03	40.7	40.7	40.7	40.7	53.60	54.17	13:27:08
89.3	90.7	90.5	89.1	89.5	89.6	90.5	90.1	90.9	90.2	89.4	90.5	90.03	-0.04	40.6	40.6	40.7	40.6	53.64	54.20	13:28:08
89.3	90.7	90.5	89.1	89.5	89.5	90.5	90.1	90.9	90.2	89.4	90.5	90.03	-0.04	40.6	40.6	40.7	40.6	53.56	54.11	13:29:08
89.3	90.7	90.5	89.2	89.5	89.6	90.5	90.1	90.9	90.2	89.4	90.5	90.03	-0.05	40.6	40.6	40.6	40.6	53.64	54.17	13:30:08
89.3	90.7	90.5	89.1	89.5	89.5	90.4	90.1	90.9	90.2	89.4	90.5	90.01	-0.05	40.5	40.6	40.6	40.6	53.56	54.09	13:31:08
89.3	90.7	90.5	89.1	89.5	89.5	90.5	90.1	90.9	90.2	89.4	90.5	90.02	-0.06	40.5	40.6	40.6	40.5	53.64	54.14	13:32:08
89.3	90.7	90.5	89.1	89.5	89.5	90.4	90.1	90.9	90.2	89.4	90.5	90.01	-0.07	40.5	40.5	40.5	40.5	53.68	54.18	13:33:08
89.3	90.7	90.5	89.1	89.5	89.5	90.5	90.1	90.9	90.2	89.4	90.5	90.02	-0.07	40.4	40.5	40.5	40.5	53.76	54.23	13:34:08
89.3	90.7	90.5	89.1	89.5	89.5	90.5	90.1	90.9	90.2	89.4	90.5	90.02	-0.08	40.4	40.5	40.5	40.5	53.80	54.27	13:35:08
89.3	90.7	90.6	89.1	89.5	89.5	90.5	90.1	90.9	90.2	89.4	90.5	90.03	-0.08	40.5	40.5	40.5	40.5	53.88	54.36	13:36:08
89.3	90.7	90.5	89.1	89.5	89.5	90.5	90.1	90.9	90.2	89.4	90.5	90.03	-0.08	40.4	40.5	40.4	40.4	53.72	54.17	13:37:08
89.3	90.7	90.5	89.1	89.5	89.6	90.5	90.1	90.9	90.2	89.4	90.5	90.03	-0.09	40.4	40.4	40.5	40.4	53.84	54.29	13:38:08
89.3	90.7	90.5	89.1	89.4	89.5	90.4	90.1	90.9	90.2	89.3	90.5	90.00	-0.09	40.4	40.4	40.4	40.4	53.76	54.20	13:39:08
89.3	90.7	90.5	89.1	89.5	89.5	90.5	90.1	90.9	90.2	89.4	90.5	90.01	-0.10	40.3	40.4	40.4	40.4	53.76	54.17	13:40:08
89.3	90.7	90.5	89.1	89.4	89.5	90.5	90.1	90.9	90.2	89.4	90.5	90.01	-0.10	40.3	40.4	40.4	40.4	53.84	54.27	13:41:08
89.3	90.7	90.5	89.1	89.5	89.5	90.5	90.1	90.9	90.2	89.4	90.5	90.02	-0.10	40.3	40.3	40.3	40.3	54.00	54.41	13:42:08
89.3	90.7	90.6	89.1	89.5	89.5	90.5	90.1	91.0	90.2	89.4	90.5	90.04	-0.10	40.3	40.3	40.3	40.3	53.92	54.31	13:43:08
89.4	90.7	90.6	89.1	89.5	89.6	90.5	90.2	91.0	90.2	89.4	90.6	90.05	-0.10	40.3	40.4	40.3	40.3	54.00	54.39	13:44:08
89.3	90.7	90.5	89.1	89.5	89.5	90.5	90.1	91.0	90.2	89.4	90.5	90.03	-0.10	40.3	40.4	40.4	40.3	53.84	54.25	13:45:08
89.3	90.7	90.5	89.1	89.5	89.5	90.5	90.1	91.0	90.2	89.4	90.5	90.03	-0.11	40.3	40.4	40.4	40.4	53.84	54.26	13:46:08
89.3	90.7	90.5	89.1	89.5	89.5	90.5	90.2	91.0	90.2	89.4	90.6	90.05	-0.11	40.3	40.3	40.4	40.3	53.80	54.20	13:47:08
89.3	90.7	90.6	89.1	89.5	89.5	90.5	90.2	91.0	90.2	89.4	90.6	90.04	-0.11	40.3	40.3	40.3	40.3	53.88	54.24	13:48:08
89.3	90.7	90.5	89.1	89.5	89.5	90.5	90.1	91.0	90.2	89.4	90.5	90.02	-0.11	40.3	40.3	40.3	40.3	53.80	54.17	13:49:08
89.3	90.7	90.5	89.1	89.5	89.5	90.5	90.2	91.0	90.2	89.4	90.5	90.03	-0.11	40.2	40.3	40.3	40.3	53.84	54.21	13:50:08
89.3	90.7	90.5	89.1	89.4	89.5	90.5	90.1	91.0	90.2	89.4	90.5	90.03	-0.11	40.3	40.3	40.3	40.3	53.84	54.21	13:51:08
89.3	90.7	90.5	89.1	89.5	89.5	90.5	90.2	91.0	90.2	89.4	90.5	90.04	-0.11	40.2	40.3	40.3	40.3	53.92	54.29	13:52:08
89.3	90.7	90.5	89.1	89.5	89.5	90.5	90.1	91.0	90.2	89.4	90.5	90.03	-0.11	40.2	40.3	40.3	40.2	53.92	54.27	13:53:08
89.3	90.7	90.5	89.1	89.4	89.5	90.5	90.1	90.9	90.2	89.3	90.5	90.00	-0.11	40.2	40.3	40.2	40.2	54.00	54.37	13:54:08
89.3	90.7	90.6	89.1	89.5	89.5	90.5	90.2	91.0	90.2	89.4	90.6	90.04	-0.11	40.1	40.2	40.2	40.2	54.08	54.40	13:55:08
89.4	90.7	90.6	89.1	89.5	89.6	90.5	90.2	91.0	90.2	89.4	90.6	90.06	-0.10	40.2	40.2	40.2	40.2	54.08	54.38	13:56:08
89.4	90.7	90.6	89.1	89.5	89.5	90.5	90.2	91.0	90.2	89.4	90.6	90.05	-0.10	40.1	40.2	40.2	40.2	53.72	54.04	13:57:08
89.4	90.7	90.6	89.1	89.5	89.5	90.5	90.2	91.0	90.2	89.4	90.6	90.05	-0.09	40.1	40.2	40.2	40.2	53.88	54.20	13:58:08
89.3	90.7	90.6	89.1	89.4	89.5	90.5	90.2	91.0	90.2	89.4	90.6	90.03	-0.09	40.2	40.2	40.2	40.2	53.96	54.29	13:59:08
89.3	90.7	90.6	89.1	89.5	89.5	90.5	90.2	91.0	90.2	89.4	90.6	90.04	-0.09	40.1	40.3	40.2	40.2	54.04	54.37	14:00:08
89.4	90.7	90.6	89.1	89.5	89.5	90.5	90.2	91.0	90.2	89.4	90.6	90.06	-0.09	40.2	40.2	40.2	40.2	54.00	54.32	14:01:08
89.3	90.7	90.5	89.1	89.4	89.5	90.5	90.2	91.0	90.2	89.4	90.5	90.03	-0.08	40.1	40.2	40.2	40.2	53.84	54.16	14:02:08
89.3	90.7	90.6	89.1	89.4	89.5	90.5	90.1	91.0	90.2	89.4	90.5	90.03	-0.08	40.2	40.2	40.3	40.2	53.72	54.06	14:03:08
89.3	90.7	90.5	89.1	89.4	89.5	90.5	90.1	90.9	90.2	89.3	90.5	89.99	-0.08	40.2	40.2	40.2	40.2	53.76	54.10	14:04:08
89.3	90.7	90.5	89.1	89.4	89.5	90.5	90.1	90.9	90.2	89.3	90.5	89.99	-0.08	40.1	40.2	40.2	40.2	53.84	54.17	14:05:08
89.3	90.7	90.5	89.1	89.4	89.5	90.5	90.1	90.9	90.1	89.3	90.5	89.98	-0.08	40.1	40.2	40.2	40.1	53.96	54.29	14:06:08
89.3	90.7	90.5	89.1	89.4	89.5	90.5	90.1	90.9	90.2	89.3	90.5	90.00	-0.08	40.1	40.1	40.2	40.1	53.96	54.27	14:07:08
89.3	90.7	90.5	89.1	89.4	89.5	90.5	90.1	90.9	90.2	89.3	90.5	90.00	-0.08	40.1	40.2	40.1	40.1	53.88	54.20	14:08:08
89.3	90.7	90.5	89.1	89.4	89.5	90.5	90.1	91.0	90.2	89.3	90.5	90.01	-0.08	40.1	40.2	40.1	40.1	54.08	54.40	14:09:08
89.3	90.7	90.5	89.1	89.4	89.5	90.5	90.1	90.9	90.2	89.3	90.5	89.99	-0.08	40.1	40.1	40.2	40.1	53.92	54.24	14:10:08
89.3	90.7	90.5	89.1	89.4	89.5	90.5	90.1	90.9	90.2	89.3	90.5	89.99	-0.08	40.1	40.2	40.2	40.2	54.00	54.33	14:11:08
89.3	90.7	90.5	89.1	89.4	89.5	90.5	90.1	91.0	90.2	89.3	90.5	90.01	-0.07	40.1	40.2	40.1	40.1	53.96	54.26	14:12:08
89.3	90.7	90.5	89.1	89.4	89.5	90.5	90.1	91.0	90.2	89.3	90.5	90.01	-0.07	40.1	40.2	40.1	40.1	54.16	54.47	14:13:08
89.3	90.7	90.5	89.1	89.4	89.5	90.5	90.2	91.0	90.2	89.3	90.5	90.02	-0.06	40.1	40.1	40.1	40.1	53.96	54.26	14:14:08
89.3	90.7	90.5	89.1	89.4	89.5	90.5	90.2	91.0	90.2	89.3	90.5	90.02	-0.06	40.1	40.1	40.1	40.1	54.08	54.37	14:15:08
89.3	90.7	90.5	89.1	89.4	89.5	90.5	90.1	91.0	90.2	89.3	90.5	90.01	-0.05	40.1	40.1	40.1	40.1	53.84	54.11	14:16:08
89.3	90.7	90.5	89.1	89.4	89.5	90.5	90.1	91.0	90.2	89.3	90.5	90.00	-0.05	40.1	40.1	40.1	40.1	53.92	54.22	14:17:08
89.3	90.7	90.5	89.1	89.4	89.5	90.5	90.1	91.0	90.2	89.3	90.5	90.01	-0.05	40.0	40.1	40.1	40.1	53.80	54.08	14:18:08
89.3	90.7	90.5	89.1	89.4	89.5	90.5	90.1	91.0	90.2	89.3	90.5	90.00	-0.04	40.1	40.1	40.1	40.1	53.88	54.18	14:19:08
89.3	90.7	90.5	89.1	89.4	89.5	90.5	90.1	90.9	90.2	89.3	90.5	90.00	-0.04	40.1	40.1	40.1	40.1	53.88	54.17	14:20:08

COMMENTS 3 CONDUCTOR, 6 #WG, 1" CONDUIT

Tested By Frank A. Dewey Date 3-10-93 Reviewed By C.L. Rutledge Date 3-10-93

AMPACITY TEST. JOB NUMBER 93-0501. SAMPLE NUMBER 93-0501-08 DATA FILE ITEM08NO.002 03-10-1993

POSITION 1			POSITION 2			POSITION 3			POSITION AVERAGE			AVE		AMBIENT TEMPERATURE				AMPS		
Trd1	Tbk1	Twh1	Trd2	Tbk2	Twh2	Trd3	Tbk3	Twh3	Tav1	Tav2	Tav3	Twave	SLOPE	Tam1	Tam2	Tam3	Taav	It	I'	TIME
89.3	90.7	90.5	89.1	89.4	89.5	90.5	90.1	90.9	90.2	89.3	90.5	90.01	-0.03	40.0	40.1	40.1	40.1	54.04	54.33	14:21:08
89.3	90.7	90.5	89.1	89.4	89.5	90.5	90.1	91.0	90.2	89.3	90.5	90.01	-0.04	40.0	40.1	40.0	40.1	53.92	54.20	14:22:08
89.3	90.7	90.5	89.0	89.4	89.4	90.5	90.1	90.9	90.2	89.3	90.5	89.99	-0.04	40.0	40.0	40.1	40.1	54.08	54.36	14:23:08
89.3	90.7	90.5	89.1	89.4	89.4	90.5	90.1	90.9	90.2	89.3	90.5	89.99	-0.04	40.0	40.1	40.0	40.1	53.92	54.21	14:24:08
89.3	90.7	90.5	89.1	89.4	89.5	90.5	90.1	91.0	90.2	89.3	90.5	90.00	-0.03	40.1	40.1	40.1	40.1	54.00	54.30	14:25:08
89.3	90.7	90.5	89.1	89.4	89.5	90.5	90.1	90.9	90.2	89.3	90.5	90.01	-0.03	40.1	40.1	40.1	40.1	54.00	54.30	14:26:08
89.3	90.7	90.5	89.1	89.4	89.4	90.5	90.1	90.9	90.2	89.3	90.5	90.00	-0.03	40.0	40.0	40.1	40.1	54.00	54.28	14:27:08
89.3	90.7	90.6	89.1	89.4	89.5	90.5	90.1	91.0	90.2	89.3	90.5	90.01	-0.03	40.0	40.1	40.0	40.1	53.96	54.24	14:28:08
89.3	90.7	90.5	89.1	89.4	89.5	90.5	90.1	90.9	90.2	89.3	90.5	90.00	-0.03	40.0	40.1	40.0	40.1	53.92	54.21	14:29:08
89.3	90.7	90.5	89.0	89.4	89.4	90.5	90.1	90.9	90.2	89.3	90.5	89.99	-0.03	40.0	40.1	40.0	40.0	53.96	54.24	14:30:08
89.3	90.7	90.5	89.0	89.4	89.4	90.5	90.1	90.9	90.2	89.3	90.5	89.99	-0.04	40.0	40.1	40.1	40.1	54.04	54.33	14:31:08
89.3	90.7	90.5	89.0	89.4	89.4	90.5	90.1	90.9	90.2	89.3	90.5	89.99	-0.04	40.0	40.1	40.1	40.1	54.12	54.42	14:32:08
89.3	90.7	90.5	89.0	89.4	89.4	90.5	90.1	90.9	90.2	89.3	90.5	89.98	-0.04	40.0	40.1	40.1	40.1	54.20	54.51	14:33:08
89.3	90.7	90.5	89.0	89.4	89.4	90.5	90.1	90.9	90.2	89.3	90.5	89.99	-0.05	40.1	40.1	40.1	40.1	54.08	54.39	14:34:08
89.3	90.7	90.5	89.0	89.4	89.4	90.5	90.1	90.9	90.2	89.3	90.5	90.00	-0.05	40.0	40.0	40.1	40.0	54.04	54.32	14:35:08
89.3	90.7	90.5	89.0	89.4	89.4	90.5	90.1	90.9	90.2	89.3	90.5	90.00	-0.05	40.0	40.0	40.1	40.0	54.04	54.31	14:36:08
89.3	90.7	90.5	89.1	89.4	89.5	90.5	90.1	91.0	90.2	89.3	90.5	90.01	-0.05	40.0	40.0	40.0	40.0	53.96	54.21	14:37:08
89.3	90.7	90.5	89.1	89.4	89.4	90.5	90.1	90.9	90.2	89.3	90.5	89.99	-0.05	40.0	40.1	40.1	40.0	54.04	54.32	14:38:08
89.3	90.7	90.5	89.1	89.4	89.4	90.5	90.1	90.9	90.2	89.3	90.5	89.99	-0.05	40.0	40.0	40.0	40.0	53.84	54.11	14:39:08
89.3	90.7	90.5	89.1	89.4	89.5	90.5	90.1	90.9	90.2	89.3	90.5	90.00	-0.05	40.0	40.0	40.0	40.0	54.00	54.27	14:40:08
89.3	90.7	90.5	89.0	89.4	89.4	90.5	90.1	91.0	90.2	89.3	90.5	89.99	-0.06	40.0	40.0	40.0	40.0	54.08	54.35	14:41:08
89.3	90.7	90.5	89.1	89.4	89.4	90.5	90.1	91.0	90.2	89.3	90.5	90.00	-0.06	40.0	40.1	40.0	40.0	54.08	54.35	14:42:08
89.3	90.7	90.5	89.1	89.4	89.5	90.5	90.1	91.0	90.2	89.3	90.5	90.00	-0.05	40.0	40.1	40.1	40.0	54.00	54.27	14:43:08
89.3	90.7	90.5	89.1	89.4	89.5	90.5	90.1	91.0	90.2	89.3	90.5	90.00	-0.05	40.0	40.1	40.0	40.1	54.24	54.52	14:44:08
89.3	90.7	90.5	89.1	89.4	89.5	90.5	90.2	91.0	90.2	89.3	90.6	90.03	-0.05	40.0	40.0	40.0	40.0	54.12	54.36	14:45:08
89.3	90.7	90.6	89.1	89.4	89.5	90.5	90.2	91.0	90.2	89.3	90.6	90.04	-0.04	40.0	40.0	40.0	40.0	54.12	54.36	14:46:08
89.3	90.7	90.5	89.1	89.4	89.5	90.5	90.2	91.0	90.2	89.3	90.6	90.03	-0.04	40.0	40.1	40.1	40.0	54.08	54.34	14:47:08
89.3	90.7	90.6	89.1	89.4	89.5	90.5	90.2	91.0	90.2	89.3	90.6	90.03	-0.03	40.0	40.1	40.0	40.1	54.20	54.47	14:48:08
89.4	90.7	90.6	89.1	89.5	89.6	90.6	90.2	91.0	90.2	89.4	90.6	90.06	-0.03	40.1	40.1	40.0	40.1	54.12	54.38	14:49:08
89.3	90.7	90.6	89.1	89.4	89.5	90.5	90.2	91.0	90.2	89.4	90.6	90.04	-0.02	40.0	40.0	40.0	40.0	54.12	54.36	14:50:08
89.3	90.7	90.6	89.1	89.5	89.5	90.6	90.2	91.0	90.2	89.4	90.6	90.06	-0.01	40.0	40.1	40.0	40.0	54.16	54.40	14:51:08
89.4	90.7	90.6	89.1	89.5	89.5	90.6	90.2	91.0	90.2	89.4	90.6	90.07	-0.01	40.0	40.1	40.0	40.0	54.12	54.35	14:52:08
89.3	90.7	90.6	89.1	89.5	89.6	90.6	90.2	91.0	90.2	89.4	90.6	90.07	0.00	40.0	40.0	40.0	40.0	54.20	54.43	14:53:08
89.3	90.7	90.6	89.1	89.5	89.5	90.6	90.2	91.0	90.2	89.4	90.6	90.07	0.00	40.1	40.1	40.0	40.1	54.28	54.53	14:54:08
89.4	90.7	90.6	89.1	89.5	89.6	90.6	90.2	91.1	90.2	89.4	90.6	90.08	0.01	40.0	40.1	40.0	40.0	53.92	54.14	14:55:08
89.4	90.8	90.6	89.2	89.5	89.6	90.6	90.2	91.1	90.2	89.4	90.6	90.09	0.03	40.1	40.2	40.1	40.1	54.12	54.37	14:56:08
89.4	90.8	90.6	89.2	89.5	89.6	90.6	90.2	91.1	90.3	89.4	90.6	90.10	0.04	40.1	40.1	40.0	40.1	54.12	54.35	14:57:08
89.4	90.8	90.6	89.2	89.5	89.6	90.6	90.3	91.1	90.3	89.4	90.7	90.12	0.05	40.0	40.1	40.1	40.1	54.20	54.43	14:58:08
89.4	90.8	90.6	89.2	89.5	89.6	90.6	90.3	91.1	90.3	89.4	90.7	90.12	0.06	40.0	40.1	40.1	40.1	54.00	54.23	14:59:08
89.4	90.8	90.6	89.2	89.5	89.6	90.6	90.3	91.1	90.3	89.4	90.7	90.12	0.08	40.0	40.0	40.0	40.0	54.08	54.27	15:00:08
89.4	90.8	90.6	89.2	89.5	89.6	90.6	90.3	91.1	90.3	89.4	90.7	90.12	0.09	40.0	40.0	40.0	40.0	54.08	54.26	15:01:08
89.4	90.8	90.6	89.2	89.5	89.6	90.6	90.3	91.1	90.3	89.4	90.6	90.11	0.10	40.0	40.2	40.0	40.1	54.08	54.31	15:02:08
89.4	90.8	90.6	89.2	89.5	89.6	90.6	90.3	91.1	90.2	89.4	90.6	90.10	0.11	40.0	40.1	40.0	40.0	53.92	54.12	15:03:08
89.4	90.8	90.6	89.2	89.5	89.6	90.6	90.3	91.1	90.2	89.4	90.6	90.10	0.11	40.0	40.0	40.1	40.0	54.04	54.25	15:04:08
89.3	90.8	90.6	89.2	89.5	89.6	90.6	90.2	91.1	90.2	89.4	90.6	90.08	0.11	40.0	40.1	40.0	40.0	54.04	54.26	15:05:08
89.3	90.7	90.6	89.2	89.5	89.6	90.6	90.2	91.0	90.2	89.4	90.6	90.08	0.12	39.9	40.1	40.1	40.0	54.00	54.22	15:06:08
89.3	90.7	90.6	89.1	89.5	89.6	90.6	90.2	91.0	90.2	89.4	90.6	90.08	0.12	40.0	40.0	40.1	40.0	53.96	54.17	15:07:08
89.3	90.7	90.6	89.1	89.5	89.5	90.6	90.2	91.0	90.2	89.4	90.6	90.05	0.12	40.0	40.1	40.1	40.1	53.88	54.14	15:08:08
89.3	90.7	90.6	89.1	89.5	89.5	90.6	90.2	91.0	90.2	89.4	90.6	90.05	0.12	40.0	40.0	40.0	40.0	54.04	54.27	15:09:08
89.3	90.7	90.6	89.1	89.5	89.5	90.6	90.2	91.0	90.2	89.4	90.6	90.05	0.11	40.0	40.0	40.0	40.0	54.08	54.31	15:10:08
89.3	90.7	90.6	89.1	89.4	89.5	90.6	90.2	91.0	90.2	89.3	90.6	90.04	0.11	40.0	40.0	40.0	40.0	54.04	54.27	15:11:08
89.3	90.7	90.6	89.1	89.5	89.5	90.6	90.2	91.0	90.2	89.4	90.6	90.06	0.11	40.0	40.0	40.0	40.0	53.96	54.18	15:12:08
89.3	90.7	90.5	89.1	89.4	89.5	90.5	90.2	91.0	90.2	89.3	90.6	90.01	0.11	39.9	40.0	40.0	40.0	53.92	54.15	15:13:08
89.3	90.7	90.5	89.1	89.4	89.5	90.5	90.2	91.0	90.2	89.3	90.5	90.01	0.10	39.9	40.0	40.0	40.0	53.96	54.18	15:14:08
89.3	90.7	90.5	89.1	89.4	89.5	90.5	90.1	91.0	90.2	89.3	90.5	90.01	0.10	39.9	39.9	40.0	40.0	54.04	54.26	15:15:08
89.3	90.7	90.5	89.1	89.4	89.5	90.5	90.1	91.0	90.2	89.3	90.5	90.00	0.09	40.0	39.9	40.0	39.9	54.04	54.25	15:16:08
89.3	90.7	90.5	89.1	89.4	89.5	90.5	90.2	91.0	90.2	89.3	90.6	90.02	0.09	39.9	40.0	40.0	40.0	54.12	54.33	15:17:08
89.3	90.7	90.5	89.1	89.4	89.5	90.5	90.2	91.0	90.2	89.3	90.6	90.02	0.09	39.9	40.0	40.0	40.0	54.12	54.34	15:18:08
89.3	90.7	90.5	89.1	89.4	89.5	90.5	90.2	91.0	90.2	89.3	90.6	90.03	0.08	39.9	40.0	40.0	40.0	54.20	54.41	15:19:08
89.3	90.7	90.5	89.1	89.4	89.5	90.5	90.2	91.0	90.2	89.3	90.6	90.03	0.08	39.9	40.0	40.0	40.0	54.12	54.33	15:20:08

COMMENTS ____________________

Tested By *Frank A. Demney* Date *3-10-93* Reviewed By *C L Rutledge* Date *3-10-93*

AMPACITY TEST. JOB NUMBER 93-0501. SAMPLE NUMBER 93-0501-08 DATA FILE ITEM08NO.002 03-10-1993 E-24

POSITION 1			POSITION 2			POSITION 3			POSITION AVERAGE			AVE		AMBIENT TEMPERATURE				AMPS		
Trd1	Tbk1	Twh1	Trd2	Tbk2	Twh2	Trd3	Tbk3	Twh3	Tav1	Tav2	Tav3	Twave	SLOPE	Tam1	Tam2	Tam3	Taav	It	I'	TIME
89.3	90.7	90.5	89.1	89.4	89.5	90.5	90.2	91.0	90.2	89.3	90.6	90.03	0.07	39.9	40.1	39.9	40.0	54.04	54.25	15:21:08
89.3	90.7	90.5	89.1	89.4	89.5	90.5	90.2	91.0	90.2	89.3	90.6	90.02	0.07	39.9	40.0	39.9	39.9	54.08	54.28	15:22:08
89.3	90.7	90.5	89.1	89.4	89.5	90.5	90.2	91.0	90.2	89.3	90.6	90.03	0.06	39.9	40.0	40.0	40.0	54.16	54.38	15:23:08
89.3	90.7	90.5	89.1	89.4	89.5	90.5	90.2	91.0	90.2	89.3	90.6	90.02	0.06	39.9	40.0	39.9	40.0	54.12	54.33	15:24:08
89.3	90.7	90.5	89.1	89.4	89.5	90.5	90.2	91.0	90.2	89.3	90.6	90.03	0.05	39.9	39.9	39.9	39.9	54.12	54.30	15:25:08
89.3	90.7	90.5	89.1	89.4	89.5	90.5	90.2	91.0	90.2	89.3	90.6	90.03	0.05	40.0	40.0	39.9	40.0	54.12	54.33	15:26:08
89.3	90.7	90.5	89.1	89.4	89.5	90.5	90.2	91.0	90.2	89.3	90.6	90.02	0.04	39.9	40.0	39.9	40.0	54.04	54.26	15:27:08
89.3	90.7	90.5	89.1	89.4	89.5	90.5	90.1	91.0	90.2	89.3	90.5	90.00	0.04	39.9	40.0	39.9	39.9	54.04	54.24	15:28:08
89.3	90.7	90.5	89.1	89.4	89.5	90.5	90.1	90.9	90.1	89.3	90.5	89.99	0.03	39.9	40.0	40.0	39.9	54.08	54.30	15:29:08
89.3	90.7	90.5	89.1	89.4	89.5	90.5	90.2	91.0	90.2	89.3	90.5	90.01	0.02	39.9	40.0	39.9	39.9	54.08	54.29	15:30:08
89.3	90.7	90.5	89.1	89.4	89.5	90.5	90.2	91.0	90.2	89.3	90.6	90.03	0.01	39.9	40.0	40.0	40.0	54.12	54.34	15:31:08
89.3	90.7	90.5	89.1	89.4	89.5	90.5	90.2	91.0	90.2	89.3	90.5	90.02	0.01	40.0	40.0	40.0	40.0	54.12	54.35	15:32:08
89.3	90.6	90.5	89.1	89.4	89.5	90.5	90.1	90.9	90.1	89.3	90.5	89.99	-0.00	39.9	40.0	40.0	40.0	54.08	54.33	15:33:08
89.3	90.7	90.5	89.1	89.4	89.5	90.5	90.1	91.0	90.2	89.3	90.5	90.01	-0.01	39.9	40.0	40.0	40.0	54.12	54.34	15:34:08
89.3	90.7	90.5	89.1	89.4	89.5	90.5	90.2	91.0	90.2	89.3	90.6	90.02	-0.02	40.0	40.1	40.0	40.0	54.08	54.33	15:35:08
89.3	90.7	90.5	89.1	89.4	89.5	90.5	90.1	90.9	90.2	89.3	90.5	90.00	-0.03	40.0	40.0	40.0	40.0	54.00	54.25	15:36:08
89.3	90.7	90.5	89.1	89.4	89.5	90.5	90.2	91.0	90.2	89.3	90.6	90.03	-0.03	40.0	40.1	40.0	40.0	54.08	54.32	15:37:08
89.3	90.7	90.5	89.1	89.4	89.5	90.5	90.1	91.0	90.2	89.3	90.5	90.01	-0.04	40.0	40.1	40.1	40.0	54.08	54.34	15:38:08
89.3	90.7	90.5	89.1	89.4	89.5	90.5	90.1	90.9	90.2	89.3	90.5	90.00	-0.05	40.0	40.1	40.0	40.0	54.04	54.30	15:39:08
89.3	90.7	90.5	89.1	89.4	89.5	90.5	90.1	90.9	90.2	89.3	90.5	90.00	-0.06	40.0	40.1	40.0	40.0	54.08	54.34	15:40:08
89.3	90.7	90.5	89.1	89.4	89.5	90.5	90.1	91.0	90.2	89.3	90.5	90.01	-0.06	40.0	40.2	40.1	40.1	54.12	54.41	15:41:08
89.3	90.7	90.5	89.1	89.4	89.5	90.5	90.1	91.0	90.2	89.3	90.5	90.01	-0.07	40.0	40.2	40.0	40.1	54.04	54.32	15:42:08
89.3	90.7	90.5	89.1	89.4	89.5	90.5	90.1	90.9	90.2	89.3	90.5	90.00	-0.08	40.0	40.2	40.2	40.1	54.16	54.48	15:43:08
89.3	90.7	90.5	89.1	89.4	89.5	90.5	90.2	91.0	90.2	89.3	90.6	90.02	-0.09	40.1	40.2	40.2	40.1	54.16	54.47	15:44:08
89.3	90.7	90.5	89.1	89.4	89.5	90.5	90.2	91.0	90.2	89.3	90.6	90.03	-0.09	40.1	40.2	40.1	40.1	54.00	54.30	15:45:08
89.3	90.7	90.6	89.1	89.4	89.5	90.5	90.2	91.0	90.2	89.4	90.6	90.05	-0.09	40.0	40.2	40.1	40.1	54.08	54.35	15:46:08
89.3	90.7	90.6	89.1	89.4	89.5	90.5	90.2	91.0	90.2	89.4	90.6	90.05	-0.09	40.1	40.2	40.1	40.1	54.08	54.37	15:47:08
89.4	90.7	90.6	89.1	89.5	89.5	90.6	90.2	91.0	90.2	89.4	90.6	90.07	-0.09	40.0	40.3	40.2	40.2	54.12	54.42	15:48:08
89.3	90.7	90.6	89.1	89.5	89.5	90.6	90.2	91.0	90.2	89.4	90.6	90.06	-0.08	40.1	40.2	40.2	40.2	54.12	54.43	15:49:08
89.3	90.7	90.6	89.1	89.5	89.5	90.6	90.2	91.0	90.2	89.4	90.6	90.05	-0.08	40.2	40.2	40.2	40.2	54.00	54.32	15:50:08
89.4	90.8	90.6	89.2	89.5	89.5	90.6	90.2	91.0	90.2	89.4	90.6	90.08	-0.08	40.1	40.2	40.2	40.2	54.16	54.46	15:51:08
89.4	90.8	90.6	89.2	89.5	89.5	90.6	90.2	91.0	90.2	89.4	90.6	90.07	-0.07	40.2	40.2	40.2	40.2	54.00	54.30	15:52:08
89.4	90.8	90.6	89.2	89.5	89.6	90.6	90.2	91.0	90.3	89.4	90.6	90.09	-0.06	40.1	40.2	40.2	40.2	54.08	54.37	15:53:08
89.4	90.8	90.6	89.2	89.5	89.6	90.6	90.2	91.0	90.3	89.4	90.6	90.10	-0.06	40.2	40.3	40.2	40.2	54.20	54.51	15:54:08
89.4	90.8	90.6	89.2	89.5	89.6	90.6	90.2	91.1	90.3	89.4	90.6	90.11	-0.05	40.1	40.3	40.2	40.2	54.20	54.49	15:55:08
89.4	90.8	90.6	89.2	89.5	89.6	90.6	90.2	91.1	90.3	89.4	90.6	90.11	-0.04	40.2	40.3	40.2	40.2	54.08	54.39	15:56:08
89.4	90.8	90.6	89.2	89.5	89.6	90.6	90.2	91.1	90.3	89.5	90.6	90.13	-0.02	40.2	40.3	40.2	40.2	54.20	54.48	15:57:08
89.4	90.8	90.7	89.2	89.6	89.6	90.6	90.3	91.1	90.3	89.5	90.7	90.14	-0.01	40.3	40.4	40.3	40.3	54.04	54.38	15:58:08
89.4	90.8	90.7	89.2	89.6	89.6	90.6	90.3	91.1	90.3	89.5	90.7	90.14	0.01	40.3	40.3	40.2	40.3	54.12	54.43	15:59:08
89.4	90.8	90.7	89.2	89.6	89.6	90.7	90.3	91.1	90.3	89.5	90.7	90.16	0.03	40.2	40.3	40.2	40.2	54.04	54.34	16:00:08
89.4	90.8	90.7	89.2	89.6	89.6	90.7	90.3	91.1	90.3	89.5	90.7	90.16	0.05	40.2	40.3	40.2	40.2	54.20	54.51	16:01:08
89.5	90.8	90.7	89.3	89.6	89.7	90.7	90.3	91.1	90.3	89.5	90.7	90.17	0.07	40.2	40.3	40.2	40.2	54.12	54.41	16:02:08
89.5	90.8	90.7	89.2	89.6	89.7	90.7	90.3	91.1	90.3	89.5	90.7	90.17	0.09	40.3	40.4	40.2	40.3	53.96	54.28	16:03:08
89.5	90.8	90.7	89.3	89.6	89.7	90.7	90.3	91.1	90.3	89.5	90.7	90.17	0.10	40.3	40.4	40.3	40.3	53.76	54.09	16:04:08
89.4	90.8	90.7	89.2	89.6	89.6	90.6	90.3	91.1	90.3	89.5	90.6	90.13	0.11	40.2	40.3	40.2	40.2	53.84	54.15	16:05:08
89.4	90.8	90.7	89.2	89.6	89.6	90.6	90.2	91.1	90.3	89.5	90.6	90.13	0.12	40.2	40.2	40.2	40.2	53.80	54.09	16:06:08
89.4	90.8	90.7	89.2	89.6	89.6	90.6	90.3	91.1	90.3	89.5	90.7	90.14	0.14	40.2	40.3	40.1	40.2	53.84	54.14	16:07:08
89.4	90.8	90.6	89.2	89.6	89.6	90.6	90.2	91.1	90.3	89.5	90.6	90.12	0.14	40.2	40.3	40.2	40.3	53.76	54.09	16:08:08
89.4	90.8	90.6	89.2	89.5	89.6	90.6	90.2	91.1	90.3	89.4	90.6	90.12	0.15	40.2	40.3	40.2	40.2	53.84	54.16	16:09:08
89.4	90.8	90.6	89.2	89.5	89.6	90.6	90.2	91.0	90.3	89.4	90.6	90.10	0.15	40.2	40.3	40.2	40.2	53.80	54.11	16:10:08
89.4	90.8	90.6	89.2	89.5	89.6	90.6	90.2	91.1	90.3	89.4	90.6	90.10	0.15	40.1	40.2	40.2	40.2	53.92	54.21	16:11:08
89.4	90.8	90.6	89.2	89.5	89.6	90.6	90.2	91.0	90.2	89.4	90.6	90.08	0.16	40.1	40.2	40.2	40.2	53.84	54.13	16:12:08
89.4	90.8	90.6	89.2	89.5	89.6	90.6	90.2	91.0	90.2	89.4	90.6	90.09	0.16	40.1	40.2	40.2	40.1	53.84	54.12	16:13:08
89.4	90.8	90.6	89.2	89.5	89.6	90.6	90.2	91.0	90.2	89.4	90.6	90.08	0.15	40.1	40.2	40.1	40.1	53.96	54.23	16:14:08
89.4	90.8	90.6	89.2	89.5	89.6	90.6	90.2	91.0	90.2	89.4	90.6	90.09	0.15	40.1	40.1	40.1	40.1	53.92	54.15	16:15:08
89.4	90.8	90.6	89.2	89.5	89.6	90.6	90.2	91.0	90.2	89.4	90.6	90.09	0.15	40.1	40.1	40.1	40.1	53.92	54.17	16:16:08
89.4	90.7	90.6	89.2	89.5	89.6	90.6	90.2	91.0	90.2	89.4	90.6	90.08	0.14	40.1	40.1	40.1	40.1	53.92	54.17	16:17:08
89.4	90.8	90.6	89.2	89.5	89.6	90.6	90.2	91.0	90.2	89.4	90.6	90.08	0.14	40.0	40.0	40.1	40.0	53.84	54.06	16:18:08
89.4	90.7	90.6	89.2	89.5	89.6	90.5	90.2	91.0	90.2	89.4	90.6	90.07	0.14	40.0	40.1	40.0	40.0	53.84	54.06	16:19:08
89.3	90.7	90.6	89.1	89.5	89.5	90.5	90.2	91.0	90.2	89.4	90.6	90.05	0.13	40.0	40.1	40.0	40.1	53.80	54.05	16:20:08

COMMENTS _____

Tested By Frank A. Dewney Date 3-10-93 Reviewed By C.L. Ritledge Date 3-10-93

ATTACHMENT F

DATA FROM 4 CONDUCTOR TESTS

AMPACITY TEST. JOB NUMBER 93-0501. SAMPLE NUMBER 93-0501-01 DATA FILE 475001no.003 04-05-1993 F-1

POSITION 1				POSITION 2				POSITION 3				POSITION AVG			AVG		AMBIENT TEMPERATURE				AMPS		
Trd1	Twh1	Tgr1	Tbk1	Trd2	Twh2	Tgr2	Tbk2	Trd3	Twh3	Tgr3	Tbk3	Tav1	Tav2	Tav3	Twave	SLOPE	Tam1	Tam2	Tam3	Taav	It	I'	TIME
90.0	90.7	83.8	83.0	87.9	89.6	82.3	82.9	89.6	92.2	85.2	86.7	86.9	85.7	88.4	86.98	0.05	39.4	39.4	39.5	39.4	455.36	454.35	02:35
90.0	90.7	83.8	83.0	87.9	89.6	82.3	82.9	89.6	92.2	85.2	86.7	86.9	85.7	88.4	86.98	0.06	39.4	39.4	39.4	39.4	454.88	453.88	02:36
89.9	90.7	83.7	83.0	87.8	89.6	82.2	82.9	89.6	92.2	85.2	86.6	86.8	85.6	88.4	86.96	0.06	39.4	39.5	39.5	39.5	454.40	453.63	02:37
89.9	90.7	83.8	83.0	87.8	89.6	82.2	82.9	89.6	92.2	85.3	86.7	86.9	85.6	88.4	86.97	0.05	39.4	39.4	39.5	39.4	454.40	453.53	02:38
90.0	90.7	83.8	83.0	87.9	89.6	82.3	82.9	89.6	92.2	85.3	86.6	86.9	85.7	88.4	86.98	0.06	39.4	39.5	39.5	39.5	455.52	454.67	02:39
89.9	90.7	83.7	83.0	87.8	89.6	82.3	82.9	89.6	92.2	85.2	86.7	86.8	85.6	88.4	86.96	0.05	39.4	39.4	39.5	39.4	455.52	454.66	02:40
89.9	90.7	83.8	83.0	87.9	89.6	82.3	82.9	89.6	92.2	85.3	86.7	86.9	85.6	88.4	86.98	0.05	39.4	39.5	39.5	39.4	455.36	454.45	02:41
90.0	90.7	83.8	83.0	87.9	89.6	82.3	82.9	89.6	92.2	85.2	86.7	86.9	85.7	88.4	86.97	0.05	39.4	39.5	39.5	39.5	454.72	453.87	02:42
90.0	90.7	83.8	83.0	87.9	89.6	82.3	82.9	89.6	92.2	85.2	86.7	86.9	85.7	88.4	86.98	0.05	39.3	39.4	39.5	39.4	454.08	453.09	02:43
89.9	90.7	83.8	83.0	87.8	89.6	82.3	82.9	89.5	92.2	85.2	86.7	86.9	85.6	88.4	86.96	0.05	39.4	39.4	39.4	39.4	451.36	450.33	02:44
90.0	90.7	83.8	83.0	87.9	89.6	82.3	82.9	89.6	92.2	85.3	86.7	86.9	85.7	88.4	86.97	0.05	39.4	39.4	39.5	39.4	453.76	452.80	02:45
90.0	90.7	83.8	83.0	87.8	89.6	82.3	82.9	89.6	92.2	85.3	86.7	86.9	85.6	88.4	86.97	0.05	39.4	39.4	39.5	39.4	453.12	452.20	02:46
90.0	90.7	83.8	83.0	87.9	89.6	82.3	82.9	89.6	92.2	85.3	86.7	86.9	85.7	88.4	86.98	0.05	39.4	39.5	39.5	39.5	453.28	452.43	02:47
90.0	90.7	83.8	83.0	87.9	89.6	82.3	82.9	89.6	92.2	85.3	86.7	86.9	85.7	88.4	86.99	0.05	39.4	39.4	39.5	39.4	450.96	449.93	02:48
90.0	90.7	83.8	83.0	87.8	89.6	82.3	82.9	89.6	92.2	85.2	86.7	86.9	85.6	88.4	86.97	0.05	39.3	39.4	39.5	39.4	452.72	451.70	02:49
90.0	90.7	83.8	83.0	87.9	89.6	82.3	82.9	89.6	92.2	85.2	86.7	86.9	85.7	88.4	86.98	0.05	39.4	39.5	39.5	39.5	452.40	451.59	02:50
90.0	90.7	83.8	83.0	87.8	89.6	82.3	82.9	89.6	92.2	85.2	86.7	86.9	85.6	88.4	86.97	0.04	39.4	39.5	39.5	39.5	452.40	451.56	02:51
89.9	90.7	83.8	83.0	87.8	89.6	82.3	82.9	89.6	92.2	85.2	86.6	86.9	85.6	88.4	86.96	0.04	39.4	39.4	39.4	39.4	452.96	451.94	02:52
90.0	90.7	83.8	83.0	87.8	89.6	82.3	82.9	89.6	92.2	85.3	86.7	86.9	85.6	88.4	86.98	0.04	39.4	39.4	39.5	39.4	453.76	452.74	02:53
90.0	90.7	83.8	83.0	87.8	89.6	82.2	82.9	89.6	92.2	85.2	86.7	86.9	85.6	88.4	86.97	0.04	39.4	39.5	39.5	39.5	453.68	452.87	02:54
90.0	90.7	83.7	83.0	87.8	89.6	82.2	82.9	89.5	92.2	85.2	86.6	86.8	85.6	88.4	86.95	0.03	39.4	39.4	39.4	39.4	454.56	453.56	02:55
89.9	90.7	83.7	83.0	87.8	89.6	82.2	82.9	89.5	92.2	85.2	86.6	86.8	85.6	88.4	86.95	0.03	39.4	39.4	39.4	39.4	452.48	451.52	02:56
90.0	90.7	83.8	83.0	87.9	89.6	82.3	82.9	89.6	92.2	85.2	86.7	86.9	85.6	88.4	86.98	0.03	39.3	39.4	39.5	39.4	454.08	453.08	02:57
90.0	90.7	83.8	83.0	87.9	89.6	82.3	82.9	89.6	92.2	85.2	86.7	86.9	85.6	88.4	86.97	0.03	39.3	39.4	39.5	39.4	452.72	451.80	02:58
89.9	90.7	83.8	83.0	87.8	89.6	82.3	82.9	89.6	92.2	85.2	86.7	86.9	85.6	88.4	86.97	0.03	39.4	39.4	39.4	39.4	453.04	452.07	02:59
90.0	90.7	83.8	83.0	87.9	89.6	82.3	82.9	89.6	92.2	85.2	86.7	86.9	85.7	88.4	86.99	0.03	39.4	39.4	39.5	39.4	452.00	450.97	03:00
90.0	90.7	83.8	83.0	87.9	89.6	82.3	82.9	89.6	92.2	85.2	86.7	86.9	85.6	88.4	86.97	0.03	39.3	39.4	39.5	39.4	453.20	452.25	03:01
90.0	90.7	83.8	83.0	87.8	89.6	82.2	82.9	89.6	92.2	85.2	86.6	86.9	85.6	88.4	86.97	0.03	39.3	39.4	39.5	39.4	453.28	452.21	03:02
89.9	90.7	83.8	83.0	87.8	89.6	82.2	82.9	89.6	92.2	85.2	86.7	86.8	85.6	88.4	86.96	0.03	39.3	39.4	39.4	39.4	454.00	452.96	03:03
90.0	90.7	83.8	83.0	87.8	89.6	82.3	82.9	89.5	92.2	85.2	86.6	86.9	85.6	88.4	86.96	0.02	39.4	39.4	39.5	39.4	451.28	450.37	03:04
90.0	90.7	83.8	83.0	87.9	89.6	82.3	82.9	89.6	92.2	85.2	86.7	86.9	85.6	88.4	86.97	0.02	39.3	39.4	39.5	39.4	453.76	452.73	03:05
89.9	90.7	83.8	83.0	87.9	89.6	82.2	82.9	89.6	92.2	85.2	86.7	86.9	85.6	88.4	86.97	0.02	39.4	39.4	39.5	39.4	453.20	452.26	03:06
90.0	90.7	83.8	83.0	87.9	89.6	82.3	82.9	89.6	92.2	85.2	86.6	86.9	85.6	88.4	86.96	0.02	39.3	39.4	39.5	39.4	454.16	453.13	03:07
90.0	90.7	83.8	83.0	87.8	89.6	82.2	82.9	89.5	92.2	85.2	86.6	86.9	85.6	88.4	86.96	0.02	39.4	39.4	39.4	39.4	453.28	452.30	03:08
90.0	90.7	83.8	83.0	87.9	89.6	82.3	82.9	89.6	92.2	85.2	86.6	86.9	85.6	88.4	86.97	0.02	39.4	39.4	39.5	39.4	453.92	452.98	03:09
90.0	90.7	83.8	83.0	87.8	89.6	82.2	82.9	89.6	92.2	85.2	86.7	86.9	85.6	88.4	86.97	0.02	39.3	39.4	39.5	39.4	453.76	452.74	03:10
90.0	90.7	83.8	83.0	87.8	89.6	82.2	82.9	89.6	92.2	85.3	86.7	86.9	85.6	88.4	86.98	0.02	39.4	39.4	39.4	39.4	454.08	452.97	03:11
89.9	90.7	83.8	83.0	87.8	89.6	82.3	82.9	89.5	92.2	85.2	86.6	86.8	85.6	88.4	86.95	0.01	39.4	39.4	39.5	39.4	452.48	451.55	03:12
90.0	90.7	83.8	83.0	87.8	89.6	82.3	82.9	89.6	92.2	85.2	86.7	86.9	85.6	88.4	86.97	0.01	39.3	39.4	39.5	39.4	453.12	452.09	03:13
90.0	90.7	83.8	83.0	87.9	89.6	82.3	82.9	89.6	92.2	85.3	86.7	86.9	85.6	88.4	86.98	0.01	39.4	39.4	39.5	39.4	451.60	450.66	03:14
90.0	90.7	83.8	83.0	87.8	89.6	82.2	82.9	89.6	92.2	85.2	86.6	86.9	85.6	88.4	86.97	0.01	39.4	39.4	39.5	39.4	452.64	451.72	03:15
89.9	90.7	83.8	83.0	87.8	89.6	82.2	82.9	89.6	92.2	85.2	86.7	86.9	85.6	88.4	86.96	0.01	39.3	39.4	39.5	39.4	452.64	451.66	03:16
89.9	90.7	83.8	83.0	87.8	89.6	82.2	82.9	89.6	92.2	85.2	86.6	86.8	85.6	88.4	86.96	0.01	39.4	39.4	39.4	39.4	453.12	452.14	03:17
90.0	90.7	83.8	83.0	87.9	89.6	82.3	82.9	89.6	92.2	85.2	86.7	86.9	85.6	88.4	86.97	0.00	39.3	39.4	39.4	39.4	452.00	450.90	03:18
90.0	90.7	83.8	83.0	87.8	89.6	82.3	82.9	89.6	92.2	85.2	86.7	86.9	85.6	88.4	86.97	0.00	39.4	39.4	39.5	39.4	453.44	452.51	03:19
89.9	90.7	83.8	83.0	87.8	89.6	82.2	82.9	89.5	92.2	85.2	86.7	86.9	85.6	88.4	86.96	-0.00	39.4	39.4	39.5	39.4	453.76	452.77	03:20
89.9	90.7	83.8	83.0	87.8	89.6	82.3	82.9	89.6	92.2	85.2	86.7	86.9	85.6	88.4	86.97	-0.00	39.3	39.4	39.5	39.4	453.36	452.31	03:21
90.0	90.7	83.8	83.0	87.9	89.6	82.3	82.9	89.6	92.2	85.2	86.7	86.9	85.6	88.4	86.97	-0.00	39.4	39.4	39.4	39.4	454.40	453.25	03:22
90.0	90.7	83.8	83.0	87.8	89.6	82.3	82.9	89.6	92.2	85.2	86.7	86.9	85.6	88.4	86.98	-0.00	39.3	39.4	39.4	39.4	454.72	453.67	03:23
90.0	90.7	83.8	83.0	87.8	89.6	82.2	82.9	89.6	92.2	85.2	86.7	86.9	85.6	88.4	86.97	-0.00	39.4	39.4	39.5	39.4	453.92	452.96	03:24
90.0	90.7	83.8	83.0	87.8	89.6	82.2	82.9	89.6	92.2	85.2	86.7	86.9	85.6	88.4	86.97	-0.00	39.3	39.4	39.5	39.4	452.96	451.92	03:25
90.0	90.7	83.8	83.0	87.8	89.6	82.2	82.9	89.6	92.2	85.2	86.6	86.9	85.6	88.4	86.97	-0.00	39.4	39.4	39.4	39.4	453.60	452.46	03:26
90.0	90.7	83.8	83.0	87.8	89.6	82.3	82.9	89.6	92.2	85.2	86.6	86.9	85.6	88.4	86.96	-0.00	39.3	39.4	39.4	39.4	453.92	452.81	03:27
90.0	90.7	83.8	83.0	87.8	89.6	82.3	82.9	89.6	92.2	85.2	86.7	86.9	85.6	88.4	86.97	-0.00	39.4	39.4	39.4	39.4	454.24	453.20	03:28
90.0	90.7	83.8	83.0	87.9	89.6	82.3	82.9	89.6	92.2	85.3	86.7	86.9	85.7	88.4	86.98	0.00	39.4	39.4	39.5	39.4	453.44	452.39	03:29
90.0	90.7	83.8	83.0	87.8	89.6	82.3	82.9	89.6	92.2	85.2	86.7	86.9	85.6	88.4	86.97	0.00	39.3	39.4	39.5	39.4	454.08	453.11	03:30
90.0	90.7	83.8	83.0	87.8	89.6	82.3	82.9	89.6	92.2	85.2	86.6	86.9	85.6	88.4	86.97	-0.00	39.3	39.4	39.5	39.4	453.76	452.71	03:31
90.0	90.7	83.8	83.0	87.8	89.6	82.3	82.9	89.6	92.2	85.2	86.6	86.9	85.6	88.4	86.96	-0.00	39.4	39.4	39.5	39.4	453.12	452.19	03:32
89.9	90.7	83.8	83.0	87.8	89.6	82.2	82.9	89.6	92.2	85.2	86.7	86.9	85.6	88.4	86.96	-0.00	39.4	39.4	39.5	39.4	453.28	452.38	03:33
89.9	90.7	83.8	83.0	87.8	89.6	82.2	82.9	89.6	92.2	85.2	86.6	86.8	85.6	88.4	86.96	-0.01	39.4	39.4	39.4	39.4	453.36	452.32	03:34

COMMENTS

Tested By Frank G. Deiner Date 4-6-93 Reviewed By C L Rutledge Date 4-6-93

AMPACITY TEST. JOB NUMBER 93-0501. SAMPLE NUMBER 93-0501-01 DATA FILE 475001no.003 04-05-1993 F-2

POSITION 1				POSITION 2				POSITION 3				POSITION AVG			AVG		AMBIENT TEMPERATURE				AMPS		
Trd1	Twh1	Tgr1	Tbk1	Trd2	Twh2	Tgr2	Tbk2	Trd3	Twh3	Tgr3	Tbk3	Tav1	Tav2	Tav3	Twave	SLOPE	Tam1	Tam2	Tam3	Taav	It	I'	TIME
89.9	90.7	83.8	83.0	87.8	89.6	82.2	82.9	89.6	92.2	85.3	86.7	86.9	85.6	88.4	86.97	-0.01	39.3	39.4	39.4	39.4	453.12	452.07	03:35
90.0	90.7	83.8	83.0	87.9	89.6	82.3	82.9	89.5	92.2	85.2	86.7	86.9	85.6	88.4	86.97	-0.01	39.4	39.4	39.4	39.4	454.72	453.64	03:36
90.0	90.7	83.8	83.0	87.8	89.5	82.3	82.9	89.6	92.2	85.2	86.7	86.9	85.6	88.4	86.96	-0.01	39.4	39.4	39.4	39.4	453.12	452.26	03:37
90.0	90.7	83.8	83.0	87.8	89.6	82.3	82.9	89.6	92.2	85.3	86.6	86.9	85.6	88.4	86.98	-0.01	39.4	39.4	39.5	39.5	454.00	453.13	03:38
90.0	90.7	83.8	83.0	87.9	89.6	82.3	82.9	89.6	92.2	85.2	86.7	86.9	85.7	88.4	86.98	-0.00	39.4	39.4	39.5	39.4	453.04	452.03	03:39
90.0	90.7	83.8	83.0	87.9	89.6	82.2	82.9	89.6	92.2	85.2	86.6	86.9	85.6	88.4	86.97	-0.01	39.3	39.4	39.4	39.4	453.12	452.00	03:40
90.0	90.7	83.8	83.0	87.8	89.6	82.2	82.9	89.6	92.2	85.2	86.6	86.9	85.6	88.4	86.96	-0.01	39.4	39.4	39.5	39.4	453.44	452.49	03:41
89.9	90.7	83.8	83.0	87.8	89.6	82.3	82.9	89.6	92.2	85.2	86.6	86.9	85.6	88.4	86.96	-0.01	39.4	39.4	39.5	39.4	453.28	452.38	03:42
90.0	90.7	83.8	83.0	87.9	89.6	82.3	82.9	89.6	92.2	85.2	86.6	86.9	85.6	88.4	86.97	-0.00	39.4	39.4	39.5	39.4	453.60	452.65	03:43
89.9	90.7	83.8	83.0	87.9	89.6	82.2	82.9	89.6	92.2	85.2	86.7	86.9	85.6	88.4	86.97	-0.00	39.4	39.4	39.5	39.4	453.28	452.41	03:44
90.0	90.7	83.8	83.0	87.8	89.6	82.3	82.9	89.6	92.2	85.3	86.6	86.9	85.6	88.4	86.97	-0.00	39.4	39.4	39.5	39.4	452.16	451.18	03:45
89.9	90.7	83.7	83.0	87.8	89.5	82.2	82.9	89.5	92.2	85.2	86.6	86.8	85.6	88.4	86.95	-0.01	39.4	39.4	39.4	39.4	452.64	451.77	03:46
89.9	90.7	83.7	83.0	87.8	89.6	82.2	82.9	89.5	92.2	85.2	86.6	86.8	85.6	88.4	86.95	-0.01	39.3	39.4	39.4	39.4	452.40	451.30	03:47
89.9	90.7	83.7	83.0	87.8	89.5	82.2	82.9	89.6	92.2	85.2	86.6	86.8	85.6	88.4	86.95	-0.01	39.3	39.4	39.5	39.4	452.96	451.99	03:48
89.9	90.7	83.7	83.0	87.8	89.6	82.2	82.9	89.6	92.2	85.2	86.7	86.8	85.6	88.4	86.96	-0.01	39.3	39.4	39.4	39.4	453.60	452.55	03:49
89.9	90.7	83.8	83.0	87.8	89.6	82.2	82.9	89.6	92.2	85.2	86.7	86.9	85.6	88.4	86.96	-0.01	39.3	39.4	39.5	39.4	453.44	452.41	03:50
89.9	90.7	83.7	83.0	87.8	89.6	82.3	82.9	89.6	92.2	85.2	86.6	86.9	85.6	88.4	86.96	-0.01	39.3	39.4	39.4	39.4	452.24	451.14	03:51
89.9	90.7	83.8	83.0	87.8	89.6	82.2	82.9	89.6	92.2	85.2	86.6	86.8	85.6	88.4	86.96	-0.01	39.3	39.4	39.4	39.4	453.44	452.36	03:52
89.9	90.7	83.7	83.0	87.8	89.6	82.2	82.9	89.6	92.2	85.2	86.6	86.8	85.6	88.4	86.95	-0.01	39.3	39.4	39.5	39.4	451.92	451.04	03:53
89.9	90.7	83.7	83.0	87.8	89.6	82.2	82.9	89.6	92.2	85.2	86.6	86.8	85.6	88.4	86.95	-0.01	39.3	39.4	39.4	39.4	451.68	450.60	03:54
89.9	90.7	83.7	83.0	87.8	89.5	82.2	82.9	89.5	92.2	85.2	86.6	86.8	85.6	88.4	86.94	-0.01	39.3	39.3	39.4	39.4	451.44	450.33	03:55
90.0	90.7	83.7	83.0	87.8	89.6	82.2	82.9	89.5	92.2	85.2	86.6	86.8	85.6	88.4	86.95	-0.02	39.3	39.4	39.4	39.4	452.40	451.23	03:56
89.9	90.7	83.7	83.0	87.8	89.5	82.2	82.9	89.5	92.2	85.2	86.6	86.8	85.6	88.4	86.94	-0.02	39.3	39.4	39.4	39.4	451.52	450.52	03:57
89.9	90.7	83.7	83.0	87.8	89.5	82.2	82.8	89.5	92.2	85.2	86.6	86.8	85.6	88.4	86.93	-0.02	39.3	39.4	39.4	39.4	451.92	450.90	03:58
89.9	90.7	83.7	83.0	87.8	89.5	82.2	82.9	89.5	92.2	85.2	86.6	86.8	85.6	88.4	86.94	-0.02	39.3	39.3	39.4	39.4	450.72	449.66	03:59
89.9	90.7	83.7	83.0	87.8	89.5	82.2	82.8	89.5	92.2	85.2	86.6	86.8	85.6	88.4	86.93	-0.02	39.3	39.3	39.4	39.4	452.16	451.07	04:00
89.9	90.7	83.7	83.0	87.8	89.5	82.2	82.8	89.5	92.2	85.2	86.6	86.8	85.6	88.4	86.92	-0.03	39.3	39.3	39.5	39.4	450.80	449.93	04:01
89.9	90.7	83.7	83.0	87.8	89.5	82.2	82.8	89.5	92.2	85.2	86.6	86.8	85.6	88.4	86.93	-0.03	39.3	39.3	39.4	39.4	450.72	449.64	04:02
89.9	90.6	83.7	82.9	87.8	89.5	82.2	82.8	89.5	92.1	85.2	86.6	86.8	85.6	88.4	86.90	-0.03	39.3	39.4	39.4	39.4	451.52	450.53	04:03
89.9	90.7	83.7	82.9	87.8	89.5	82.2	82.8	89.5	92.2	85.2	86.6	86.8	85.6	88.4	86.92	-0.04	39.3	39.4	39.4	39.4	452.96	451.98	04:04
89.9	90.7	83.7	83.0	87.8	89.5	82.2	82.8	89.5	92.2	85.2	86.6	86.8	85.6	88.4	86.93	-0.04	39.3	39.3	39.4	39.4	452.32	451.37	04:05
89.9	90.7	83.7	83.0	87.8	89.5	82.2	82.9	89.5	92.2	85.2	86.6	86.8	85.6	88.4	86.94	-0.04	39.3	39.4	39.4	39.4	452.24	451.20	04:06
89.9	90.7	83.7	83.0	87.8	89.5	82.2	82.8	89.5	92.1	85.2	86.6	86.8	85.6	88.4	86.91	-0.05	39.3	39.4	39.4	39.4	450.88	449.95	04:07
89.9	90.6	83.7	83.0	87.8	89.5	82.2	82.8	89.5	92.2	85.2	86.6	86.8	85.6	88.4	86.91	-0.05	39.3	39.4	39.4	39.4	450.72	449.83	04:08
89.9	90.7	83.7	83.0	87.8	89.5	82.2	82.8	89.5	92.1	85.2	86.6	86.8	85.6	88.4	86.91	-0.05	39.3	39.4	39.4	39.4	449.68	448.74	04:09
89.9	90.7	83.7	82.9	87.8	89.5	82.2	82.8	89.5	92.1	85.2	86.6	86.8	85.6	88.3	86.91	-0.05	39.3	39.4	39.4	39.4	451.20	450.33	04:10
89.9	90.7	83.7	83.0	87.8	89.5	82.2	82.8	89.5	92.2	85.2	86.6	86.8	85.6	88.4	86.92	-0.06	39.4	39.4	39.5	39.4	451.28	450.50	04:11
89.9	90.7	83.7	83.0	87.8	89.5	82.2	82.8	89.5	92.1	85.2	86.6	86.8	85.6	88.4	86.91	-0.06	39.4	39.4	39.4	39.4	452.16	451.34	04:12
89.9	90.6	83.7	82.9	87.8	89.5	82.2	82.8	89.5	92.1	85.1	86.6	86.8	85.6	88.3	86.90	-0.06	39.3	39.4	39.4	39.4	451.28	450.36	04:13
89.9	90.7	83.7	83.0	87.8	89.5	82.2	82.8	89.5	92.1	85.2	86.6	86.8	85.6	88.3	86.90	-0.07	39.3	39.3	39.4	39.4	452.32	451.32	04:14
89.9	90.7	83.7	82.9	87.8	89.5	82.2	82.8	89.5	92.1	85.2	86.6	86.8	85.6	88.3	86.90	-0.07	39.3	39.4	39.4	39.4	452.88	451.94	04:15
89.9	90.6	83.7	83.0	87.8	89.5	82.2	82.8	89.5	92.1	85.2	86.6	86.8	85.6	88.4	86.91	-0.07	39.3	39.4	39.5	39.4	454.24	453.45	04:16
89.9	90.7	83.7	83.0	87.8	89.5	82.2	82.8	89.5	92.1	85.2	86.6	86.8	85.6	88.3	86.91	-0.08	39.4	39.3	39.5	39.4	453.60	452.71	04:17
89.9	90.7	83.7	82.9	87.8	89.5	82.2	82.8	89.5	92.1	85.1	86.6	86.8	85.6	88.3	86.90	-0.08	39.4	39.3	39.4	39.4	453.52	452.63	04:18
89.9	90.7	83.7	83.0	87.8	89.5	82.2	82.8	89.5	92.1	85.2	86.6	86.8	85.6	88.4	86.91	-0.08	39.4	39.4	39.4	39.4	453.92	453.13	04:19
89.9	90.6	83.7	83.0	87.8	89.5	82.2	82.8	89.5	92.1	85.2	86.6	86.8	85.6	88.4	86.91	-0.08	39.3	39.4	39.4	39.4	454.72	453.88	04:20
89.9	90.7	83.7	83.0	87.8	89.5	82.2	82.8	89.5	92.1	85.2	86.6	86.8	85.6	88.4	86.92	-0.08	39.4	39.4	39.4	39.4	454.48	453.60	04:21
89.9	90.6	83.7	83.0	87.8	89.5	82.2	82.8	89.5	92.1	85.2	86.6	86.8	85.6	88.3	86.90	-0.08	39.3	39.4	39.5	39.4	454.32	453.59	04:22
89.9	90.7	83.7	83.0	87.8	89.5	82.2	82.8	89.5	92.2	85.2	86.6	86.8	85.6	88.4	86.92	-0.08	39.3	39.4	39.4	39.4	454.96	454.02	04:23
89.9	90.7	83.7	83.0	87.8	89.5	82.2	82.8	89.5	92.2	85.2	86.6	86.8	85.6	88.4	86.93	-0.08	39.3	39.4	39.5	39.4	454.56	453.74	04:24
89.9	90.7	83.7	83.0	87.8	89.5	82.2	82.9	89.5	92.2	85.2	86.6	86.8	85.6	88.4	86.92	-0.08	39.3	39.4	39.4	39.4	454.56	453.58	04:25
89.9	90.7	83.7	83.0	87.8	89.5	82.2	82.8	89.5	92.2	85.2	86.6	86.8	85.6	88.4	86.94	-0.08	39.3	39.4	39.4	39.4	453.36	452.41	04:26
89.9	90.7	83.7	83.0	87.8	89.5	82.2	82.8	89.5	92.1	85.2	86.6	86.8	85.6	88.4	86.92	-0.08	39.3	39.4	39.4	39.4	452.64	451.67	04:27
89.9	90.7	83.7	83.0	87.8	89.5	82.2	82.8	89.5	92.1	85.2	86.6	86.8	85.6	88.4	86.92	-0.07	39.3	39.4	39.4	39.4	453.04	452.06	04:28
89.9	90.7	83.7	83.0	87.8	89.5	82.2	82.9	89.5	92.2	85.2	86.6	86.8	85.6	88.4	86.94	-0.07	39.3	39.4	39.4	39.4	453.12	452.09	04:29
89.9	90.7	83.7	83.0	87.8	89.5	82.2	82.8	89.5	92.2	85.2	86.6	86.8	85.6	88.4	86.92	-0.07	39.3	39.4	39.4	39.4	453.44	452.50	04:30
89.9	90.6	83.7	82.9	87.8	89.5	82.2	82.8	89.5	92.1	85.2	86.6	86.8	85.6	88.3	86.91	-0.07	39.3	39.3	39.5	39.4	454.08	453.26	04:31
89.9	90.7	83.7	83.0	87.8	89.5	82.2	82.9	89.5	92.2	85.2	86.6	86.8	85.6	88.4	86.93	-0.07	39.3	39.4	39.4	39.4	453.92	452.88	04:32
89.9	90.7	83.7	83.0	87.8	89.5	82.2	82.9	89.5	92.2	85.2	86.6	86.8	85.6	88.4	86.92	-0.06	39.3	39.3	39.4	39.4	453.12	452.13	04:33
89.9	90.7	83.7	83.0	87.8	89.5	82.2	82.8	89.5	92.1	85.2	86.6	86.8	85.6	88.4	86.91	-0.06	39.3	39.4	39.4	39.4	452.32	451.42	04:34

COMMENTS

Tested By Frank A. Deiney Date 4-6-93 Reviewed By C.L. Rutledge Date 4-6-93

AMPACITY TEST, JOB NUMBER 93-0501, SAMPLE NUMBER 93-0501-01 DATA FILE 475001ne.003 04-05-1993 F-3

POSITION 1				POSITION 2				POSITION 3				POSITION AVG			AVG		AMBIENT TEMPERATURE				AMPS		
Trd1	Twh1	Tgr1	Tbk1	Trd2	Twh2	Tgr2	Tbk2	Trd3	Twh3	Tgr3	Tbk3	Tav1	Tav2	Tav3	Twave	SLOPE	Tam1	Tam2	Tam3	Taav	It	I'	TIME
89.9	90.7	83.7	83.0	87.8	89.5	82.2	82.8	89.5	92.1	85.2	86.6	86.8	85.6	88.4	86.91	-0.06	39.3	39.4	39.4	39.4	453.12	452.22	04:35
89.9	90.7	83.7	83.0	87.8	89.5	82.2	82.8	89.5	92.1	85.2	86.6	86.8	85.6	88.3	86.91	-0.06	39.4	39.4	39.4	39.4	453.28	452.39	04:36
89.9	90.7	83.7	83.0	87.8	89.5	82.2	82.9	89.5	92.2	85.2	86.6	86.8	85.6	88.4	86.93	-0.06	39.3	39.4	39.4	39.4	453.44	452.47	04:37
89.9	90.7	83.7	83.0	87.8	89.5	82.2	82.8	89.5	92.2	85.2	86.6	86.8	85.6	88.4	86.93	-0.05	39.4	39.4	39.4	39.4	453.60	452.61	04:38
89.9	90.7	83.7	83.0	87.8	89.5	82.2	82.9	89.5	92.2	85.2	86.6	86.8	85.6	88.4	86.93	-0.05	39.4	39.3	39.4	39.4	454.08	453.18	04:39
89.9	90.7	83.7	83.0	87.8	89.5	82.2	82.8	89.5	92.2	85.2	86.6	86.8	85.6	88.4	86.93	-0.04	39.4	39.4	39.4	39.4	452.64	451.64	04:40
89.9	90.7	83.7	83.0	87.8	89.5	82.2	82.9	89.5	92.2	85.2	86.6	86.8	85.6	88.4	86.93	-0.04	39.3	39.4	39.4	39.4	453.12	452.17	04:41
89.9	90.7	83.7	83.0	87.8	89.5	82.2	82.8	89.5	92.1	85.2	86.6	86.8	85.6	88.4	86.92	-0.04	39.3	39.4	39.4	39.4	452.80	451.86	04:42
89.9	90.7	83.7	83.0	87.8	89.5	82.2	82.9	89.5	92.2	85.2	86.6	86.8	85.6	88.4	86.94	-0.03	39.3	39.4	39.4	39.4	452.00	450.99	04:43
89.9	90.7	83.7	83.0	87.8	89.5	82.2	82.8	89.5	92.2	85.2	86.6	86.8	85.6	88.4	86.93	-0.03	39.3	39.4	39.4	39.4	452.88	451.90	04:44
89.9	90.7	83.7	83.0	87.8	89.5	82.2	82.8	89.5	92.2	85.2	86.6	86.8	85.6	88.4	86.92	-0.03	39.3	39.3	39.4	39.4	453.36	452.30	04:45
89.9	90.7	83.7	83.0	87.8	89.5	82.2	82.8	89.5	92.1	85.2	86.6	86.8	85.6	88.3	86.91	-0.03	39.3	39.4	39.4	39.4	451.68	450.87	04:46
89.9	90.7	83.7	83.0	87.8	89.5	82.2	82.8	89.5	92.1	85.2	86.6	86.8	85.6	88.3	86.92	-0.02	39.3	39.4	39.4	39.4	452.64	451.64	04:47
89.9	90.7	83.7	83.0	87.8	89.5	82.2	82.9	89.5	92.2	85.2	86.6	86.8	85.6	88.4	86.93	-0.02	39.3	39.4	39.4	39.4	453.60	452.62	04:48
89.9	90.7	83.8	83.0	87.8	89.5	82.2	82.9	89.5	92.2	85.2	86.6	86.8	85.6	88.4	86.95	-0.02	39.3	39.4	39.4	39.4	454.24	453.17	04:49
89.9	90.7	83.7	83.0	87.8	89.5	82.2	82.8	89.5	92.1	85.2	86.6	86.8	85.6	88.3	86.92	-0.01	39.3	39.4	39.4	39.4	451.52	450.60	04:50
89.9	90.7	83.7	82.9	87.8	89.5	82.2	82.8	89.5	92.1	85.2	86.6	86.8	85.6	88.3	86.91	-0.01	39.3	39.4	39.4	39.4	451.04	450.18	04:51
89.9	90.7	83.7	83.0	87.8	89.5	82.2	82.8	89.5	92.2	85.2	86.6	86.8	85.6	88.4	86.93	-0.01	39.3	39.3	39.4	39.4	451.68	450.67	04:52
89.9	90.7	83.7	83.0	87.8	89.5	82.2	82.8	89.5	92.1	85.2	86.6	86.8	85.6	88.4	86.92	-0.00	39.3	39.4	39.4	39.4	451.36	450.37	04:53
89.9	90.7	83.7	83.0	87.8	89.5	82.2	82.8	89.5	92.1	85.2	86.6	86.8	85.6	88.3	86.92	-0.00	39.3	39.3	39.4	39.3	451.36	450.21	04:54
89.9	90.7	83.7	83.0	87.8	89.5	82.2	82.8	89.5	92.1	85.2	86.6	86.8	85.6	88.3	86.91	0.00	39.3	39.3	39.5	39.4	453.36	452.48	04:55
89.9	90.7	83.7	83.0	87.8	89.5	82.2	82.9	89.5	92.2	85.2	86.6	86.8	85.6	88.4	86.94	0.01	39.3	39.3	39.5	39.4	452.00	451.04	04:56
89.9	90.7	83.7	83.0	87.8	89.5	82.2	82.8	89.5	92.1	85.2	86.6	86.8	85.6	88.4	86.93	0.01	39.3	39.3	39.5	39.4	452.80	451.89	04:57
89.9	90.7	83.7	83.0	87.8	89.5	82.2	82.8	89.5	92.1	85.2	86.6	86.8	85.6	88.3	86.92	0.01	39.3	39.4	39.4	39.4	451.28	450.36	04:58
89.9	90.7	83.7	83.0	87.8	89.5	82.2	82.8	89.5	92.1	85.2	86.6	86.8	85.6	88.3	86.91	0.01	39.3	39.4	39.4	39.4	451.68	450.69	04:59
89.9	90.7	83.7	83.0	87.8	89.5	82.2	82.8	89.5	92.1	85.2	86.6	86.8	85.6	88.3	86.91	0.01	39.3	39.4	39.4	39.4	451.84	450.89	05:00
89.9	90.7	83.7	82.9	87.8	89.5	82.2	82.8	89.5	92.1	85.2	86.6	86.8	85.6	88.3	86.90	0.01	39.3	39.4	39.4	39.4	452.64	451.70	05:01
89.9	90.7	83.7	83.0	87.8	89.5	82.2	82.8	89.5	92.1	85.2	86.6	86.8	85.6	88.3	86.91	0.01	39.3	39.4	39.4	39.4	451.36	450.44	05:02
89.9	90.7	83.7	83.0	87.8	89.5	82.2	82.8	89.5	92.1	85.2	86.6	86.8	85.6	88.3	86.91	0.01	39.3	39.3	39.4	39.4	452.00	450.95	05:03
89.9	90.6	83.7	83.0	87.8	89.5	82.2	82.8	89.5	92.1	85.2	86.6	86.8	85.6	88.3	86.90	0.00	39.3	39.3	39.4	39.4	450.80	449.88	05:04
89.9	90.6	83.7	83.0	87.8	89.5	82.2	82.8	89.5	92.1	85.2	86.6	86.8	85.6	88.3	86.89	0.00	39.3	39.4	39.5	39.4	451.52	450.73	05:05
89.9	90.6	83.7	82.9	87.8	89.5	82.2	82.8	89.5	92.1	85.2	86.6	86.8	85.6	88.3	86.89	0.00	39.3	39.4	39.4	39.4	451.68	450.82	05:06
89.9	90.6	83.7	82.9	87.8	89.5	82.2	82.8	89.5	92.1	85.2	86.6	86.8	85.6	88.3	86.89	-0.00	39.3	39.3	39.4	39.4	451.44	450.56	05:07
89.9	90.6	83.7	82.9	87.8	89.5	82.2	82.8	89.5	92.1	85.2	86.6	86.8	85.6	88.3	86.90	-0.00	39.3	39.4	39.4	39.4	450.32	449.37	05:08
89.9	90.6	83.7	82.9	87.8	89.5	82.2	82.8	89.5	92.1	85.1	86.6	86.8	85.6	88.3	86.89	-0.01	39.3	39.3	39.4	39.3	449.60	448.62	05:09
89.9	90.6	83.7	82.9	87.8	89.5	82.2	82.8	89.5	92.1	85.2	86.6	86.8	85.5	88.3	86.88	-0.01	39.3	39.3	39.4	39.4	450.24	449.35	05:10
89.8	90.6	83.7	82.9	87.7	89.5	82.2	82.8	89.5	92.1	85.1	86.6	86.8	85.5	88.3	86.87	-0.02	39.3	39.3	39.3	39.3	450.32	449.35	05:11
89.9	90.6	83.7	82.9	87.8	89.5	82.2	82.8	89.5	92.1	85.1	86.6	86.8	85.6	88.3	86.88	-0.02	39.3	39.3	39.4	39.3	452.32	451.32	05:12
89.9	90.6	83.7	82.9	87.7	89.4	82.1	82.8	89.4	92.1	85.2	86.5	86.8	85.5	88.3	86.86	-0.03	39.3	39.3	39.5	39.4	451.92	451.18	05:13
89.9	90.6	83.7	82.9	87.8	89.5	82.2	82.8	89.5	92.1	85.2	86.6	86.8	85.5	88.3	86.88	-0.03	39.3	39.3	39.4	39.3	451.60	450.57	05:14
89.8	90.6	83.6	82.9	87.7	89.4	82.1	82.8	89.5	92.1	85.2	86.6	86.7	85.5	88.3	86.86	-0.04	39.3	39.3	39.4	39.3	452.40	451.56	05:15
89.8	90.6	83.6	82.9	87.7	89.4	82.2	82.8	89.4	92.1	85.1	86.5	86.7	85.5	88.3	86.85	-0.04	39.3	39.3	39.4	39.3	451.92	450.94	05:16
89.8	90.6	83.6	82.9	87.7	89.5	82.1	82.8	89.5	92.1	85.2	86.6	86.7	85.5	88.3	86.86	-0.05	39.3	39.3	39.4	39.3	452.00	450.93	05:17
89.8	90.6	83.7	82.9	87.7	89.4	82.2	82.8	89.4	92.1	85.1	86.5	86.7	85.5	88.3	86.86	-0.06	39.3	39.4	39.4	39.4	452.32	451.52	05:18
89.8	90.6	83.7	82.9	87.7	89.5	82.1	82.8	89.5	92.1	85.2	86.5	86.8	85.5	88.3	86.86	-0.06	39.3	39.3	39.4	39.3	451.36	450.43	05:19
89.8	90.6	83.7	82.9	87.7	89.4	82.1	82.8	89.4	92.1	85.1	86.6	86.7	85.5	88.3	86.85	-0.07	39.3	39.3	39.3	39.3	450.72	449.77	05:20
89.8	90.6	83.6	82.9	87.7	89.4	82.1	82.7	89.4	92.1	85.1	86.5	86.7	85.5	88.3	86.84	-0.07	39.3	39.3	39.4	39.3	450.72	449.90	05:21
89.8	90.6	83.6	82.9	87.7	89.4	82.1	82.8	89.4	92.1	85.1	86.5	86.7	85.5	88.3	86.83	-0.08	39.3	39.3	39.4	39.3	450.48	449.58	05:22
89.8	90.6	83.6	82.9	87.7	89.4	82.1	82.8	89.4	92.0	85.1	86.5	86.7	85.5	88.3	86.82	-0.09	39.3	39.3	39.4	39.3	450.24	449.56	05:23
89.8	90.6	83.6	82.9	87.7	89.4	82.1	82.7	89.4	92.0	85.1	86.5	86.7	85.5	88.3	86.82	-0.09	39.3	39.3	39.4	39.3	450.16	449.39	05:24
89.8	90.6	83.6	82.9	87.7	89.4	82.1	82.8	89.4	92.1	85.1	86.5	86.7	85.5	88.3	86.84	-0.10	39.3	39.4	39.4	39.4	450.40	449.70	05:25
89.8	90.6	83.6	82.9	87.7	89.4	82.1	82.8	89.4	92.1	85.1	86.5	86.7	85.5	88.3	86.83	-0.10	39.3	39.3	39.4	39.3	450.96	450.25	05:26
89.8	90.5	83.6	82.8	87.7	89.4	82.1	82.7	89.4	92.1	85.1	86.5	86.7	85.5	88.3	86.81	-0.11	39.3	39.3	39.4	39.3	450.32	449.61	05:27
89.8	90.5	83.6	82.8	87.7	89.4	82.1	82.7	89.4	92.0	85.1	86.5	86.7	85.5	88.3	86.80	-0.11	39.3	39.3	39.3	39.3	451.04	450.29	05:28
89.8	90.5	83.6	82.9	87.7	89.4	82.1	82.8	89.4	92.0	85.1	86.5	86.7	85.5	88.3	86.81	-0.12	39.3	39.3	39.4	39.3	450.88	450.24	05:29
89.8	90.5	83.6	82.8	87.7	89.4	82.1	82.7	89.4	92.0	85.1	86.5	86.7	85.5	88.3	86.81	-0.12	39.3	39.3	39.3	39.3	450.56	449.74	05:30
89.8	90.5	83.6	82.9	87.7	89.4	82.1	82.7	89.4	92.0	85.1	86.5	86.7	85.5	88.3	86.81	-0.13	39.3	39.3	39.3	39.3	450.16	449.30	05:31
89.8	90.5	83.6	82.8	87.7	89.4	82.1	82.7	89.4	92.0	85.1	86.5	86.7	85.4	88.2	86.78	-0.13	39.3	39.3	39.4	39.3	449.92	449.30	05:32
89.8	90.5	83.6	82.9	87.7	89.4	82.1	82.7	89.4	92.0	85.1	86.5	86.7	85.5	88.3	86.80	-0.14	39.3	39.3	39.4	39.3	449.28	448.72	05:33
89.8	90.5	83.6	82.9	87.7	89.4	82.1	82.7	89.4	92.0	85.1	86.5	86.7	85.5	88.3	86.80	-0.14	39.3	39.3	39.4	39.3	450.96	450.38	05:34

COMMENTS

Tested By Frank A. Deeney Date 4-6-93 Reviewed By C.L. Rutledge Date 4-6-93

AMPACITY TEST. JOB NUMBER 93-0501. SAMPLE NUMBER 93-0501-02 DATA FILE 475002no.002 04-02-1993 F-4

POSITION 1				POSITION 2				POSITION 3				POSITION AVG			AVG		AMBIENT TEMPERATURE				AMPS		
Trd1	Twh1	Tgr1	Tbk1	Trd2	Twh2	Tgr2	Tbk2	Trd3	Twh3	Tgr3	Tbk3	Tav1	Tav2	Tav3	Twave	SLOPE	Tam1	Tam2	Tam3	Taav	It	I'	TIME
90.8	91.6	85.2	84.9	88.7	89.6	83.3	83.5	90.1	91.5	85.6	85.0	88.1	86.3	88.1	87.48	-0.05	40.1	40.3	40.3	40.2	431.04	433.41	05:26
90.7	91.5	85.2	84.8	88.7	89.6	83.3	83.4	90.1	91.5	85.6	85.0	88.1	86.2	88.1	87.45	-0.05	40.1	40.3	40.2	40.2	430.96	433.36	05:27
90.8	91.6	85.2	84.9	88.7	89.6	83.3	83.5	90.1	91.5	85.7	85.1	88.1	86.3	88.1	87.48	-0.05	40.1	40.3	40.3	40.2	429.92	432.20	05:28
90.7	91.6	85.2	84.8	88.7	89.6	83.3	83.4	90.1	91.5	85.6	85.0	88.1	86.3	88.1	87.46	-0.05	40.1	40.3	40.2	40.2	430.72	433.00	05:29
90.7	91.5	85.2	84.9	88.7	89.6	83.3	83.4	90.1	91.5	85.6	85.1	88.1	86.3	88.1	87.47	-0.05	40.1	40.3	40.3	40.2	431.52	433.81	05:30
90.7	91.5	85.2	84.8	88.7	89.6	83.3	83.4	90.1	91.5	85.6	85.0	88.1	86.3	88.1	87.46	-0.05	40.1	40.3	40.2	40.2	431.20	433.52	05:31
90.7	91.5	85.1	84.8	88.6	89.6	83.3	83.4	90.1	91.5	85.6	85.0	88.1	86.2	88.1	87.44	-0.05	40.1	40.3	40.2	40.2	430.72	432.92	05:32
90.7	91.5	85.1	84.8	88.7	89.6	83.3	83.4	90.1	91.5	85.6	85.0	88.1	86.3	88.1	87.46	-0.05	40.1	40.2	40.2	40.2	431.20	433.35	05:33
90.7	91.5	85.2	84.8	88.7	89.6	83.3	83.4	90.1	91.5	85.6	85.1	88.1	86.2	88.1	87.46	-0.05	40.1	40.2	40.2	40.2	430.24	432.42	05:34
90.7	91.5	85.1	84.8	88.6	89.6	83.3	83.4	90.1	91.5	85.6	85.0	88.0	86.2	88.0	87.43	-0.05	40.1	40.3	40.3	40.2	431.04	433.52	05:35
90.7	91.5	85.1	84.8	88.7	89.6	83.3	83.4	90.1	91.5	85.6	85.0	88.0	86.2	88.1	87.44	-0.05	40.1	40.3	40.2	40.2	430.88	433.32	05:36
90.7	91.5	85.1	84.8	88.7	89.6	83.3	83.4	90.1	91.5	85.6	85.0	88.0	86.2	88.1	87.45	-0.05	40.1	40.3	40.2	40.2	430.24	432.65	05:37
90.7	91.5	85.1	84.8	88.6	89.6	83.3	83.4	90.1	91.5	85.6	85.0	88.0	86.2	88.1	87.44	-0.05	40.1	40.3	40.2	40.2	428.64	431.01	05:38
90.7	91.5	85.1	84.8	88.7	89.6	83.3	83.4	90.1	91.5	85.6	85.0	88.0	86.2	88.1	87.44	-0.05	40.1	40.3	40.1	40.2	430.40	432.58	05:39
90.7	91.5	85.1	84.8	88.6	89.6	83.3	83.4	90.1	91.5	85.6	85.0	88.0	86.2	88.1	87.44	-0.05	40.1	40.3	40.2	40.2	430.08	432.44	05:40
90.7	91.5	85.1	84.8	88.7	89.6	83.3	83.4	90.1	91.5	85.6	85.0	88.0	86.2	88.1	87.44	-0.05	40.1	40.3	40.2	40.2	430.72	433.09	05:41
90.7	91.5	85.1	84.8	88.6	89.6	83.3	83.4	90.1	91.5	85.6	85.0	88.0	86.2	88.0	87.43	-0.06	40.1	40.3	40.2	40.2	429.76	432.05	05:42
90.7	91.5	85.1	84.8	88.6	89.6	83.3	83.4	90.1	91.5	85.6	85.0	88.0	86.2	88.1	87.44	-0.06	40.1	40.3	40.2	40.2	430.48	432.77	05:43
90.7	91.5	85.1	84.8	88.6	89.6	83.3	83.4	90.1	91.5	85.6	85.0	88.0	86.2	88.1	87.44	-0.06	40.1	40.3	40.3	40.2	430.24	432.64	05:44
90.7	91.5	85.1	84.8	88.6	89.6	83.2	83.4	90.1	91.5	85.6	85.0	88.0	86.2	88.0	87.42	-0.06	40.1	40.2	40.2	40.2	430.24	432.59	05:45
90.7	91.5	85.1	84.8	88.6	89.6	83.3	83.4	90.1	91.5	85.6	85.0	88.0	86.2	88.0	87.43	-0.06	40.1	40.2	40.1	40.1	430.16	432.34	05:46
90.7	91.5	85.1	84.8	88.6	89.6	83.3	83.4	90.1	91.5	85.6	85.0	88.0	86.2	88.0	87.43	-0.07	40.1	40.3	40.3	40.2	429.52	431.96	05:47
90.7	91.5	85.1	84.8	88.6	89.6	83.3	83.4	90.1	91.5	85.6	85.0	88.0	86.2	88.0	87.44	-0.07	40.1	40.3	40.2	40.2	431.12	433.49	05:48
90.7	91.5	85.1	84.8	88.6	89.6	83.3	83.4	90.1	91.5	85.6	85.0	88.0	86.2	88.0	87.42	-0.07	40.1	40.3	40.3	40.2	430.24	432.75	05:49
90.7	91.5	85.1	84.8	88.6	89.6	83.2	83.4	90.0	91.5	85.6	85.0	88.0	86.2	88.0	87.42	-0.07	40.1	40.2	40.3	40.2	430.08	432.49	05:50
90.7	91.5	85.1	84.8	88.6	89.6	83.2	83.4	90.0	91.5	85.6	85.0	88.0	86.2	88.0	87.42	-0.07	40.1	40.3	40.3	40.2	430.56	433.11	05:51
90.7	91.5	85.1	84.8	88.6	89.6	83.2	83.4	90.0	91.5	85.6	85.0	88.0	86.2	88.0	87.41	-0.07	40.1	40.3	40.3	40.2	430.72	433.19	05:52
90.7	91.5	85.1	84.8	88.6	89.6	83.2	83.4	90.0	91.5	85.6	85.0	88.0	86.2	88.0	87.41	-0.08	40.1	40.3	40.3	40.2	430.64	433.23	05:53
90.7	91.5	85.1	84.8	88.6	89.6	83.3	83.4	90.0	91.5	85.6	85.0	88.0	86.2	88.0	87.43	-0.08	40.1	40.2	40.3	40.2	431.44	433.72	05:54
90.7	91.5	85.1	84.8	88.6	89.6	83.2	83.4	90.0	91.5	85.6	85.0	88.0	86.2	88.0	87.42	-0.08	40.1	40.2	40.2	40.2	431.36	433.72	05:55
90.7	91.5	85.1	84.8	88.6	89.6	83.2	83.4	90.0	91.5	85.6	85.0	88.0	86.2	88.0	87.40	-0.08	40.1	40.3	40.2	40.2	430.08	432.57	05:56
90.7	91.5	85.1	84.8	88.6	89.6	83.2	83.4	90.0	91.5	85.6	85.0	88.0	86.2	88.0	87.41	-0.08	40.1	40.2	40.3	40.2	430.48	433.00	05:57
90.7	91.5	85.1	84.8	88.6	89.6	83.2	83.4	90.0	91.5	85.6	85.0	88.0	86.2	88.0	87.42	-0.08	40.1	40.3	40.3	40.2	430.00	432.48	05:58
90.7	91.5	85.1	84.8	88.6	89.6	83.3	83.4	90.0	91.5	85.6	85.0	88.0	86.2	88.0	87.42	-0.09	40.1	40.3	40.2	40.2	429.92	432.32	05:59
90.7	91.5	85.1	84.8	88.6	89.6	83.2	83.4	90.0	91.5	85.6	85.0	88.0	86.2	88.0	87.42	-0.09	40.1	40.3	40.2	40.2	429.76	432.12	06:00
90.7	91.5	85.1	84.8	88.6	89.6	83.2	83.4	90.0	91.5	85.6	85.0	88.0	86.2	88.0	87.42	-0.09	40.1	40.3	40.3	40.2	429.04	431.48	06:01
90.7	91.5	85.1	84.8	88.6	89.6	83.3	83.4	90.1	91.5	85.6	85.0	88.0	86.2	88.0	87.43	-0.08	40.0	40.2	40.2	40.1	430.48	432.68	06:02
90.7	91.5	85.1	84.8	88.6	89.6	83.3	83.4	90.0	91.5	85.6	85.0	88.0	86.2	88.0	87.42	-0.08	40.1	40.2	40.2	40.2	429.12	431.34	06:03
90.7	91.5	85.1	84.8	88.6	89.6	83.2	83.4	90.0	91.5	85.6	85.0	88.0	86.2	88.0	87.42	-0.08	40.1	40.3	40.3	40.2	433.28	435.80	06:04
90.7	91.5	85.1	84.8	88.6	89.6	83.2	83.4	90.1	91.5	85.6	85.0	88.0	86.2	88.0	87.43	-0.08	40.1	40.3	40.2	40.2	430.96	433.27	06:05
90.7	91.5	85.1	84.8	88.6	89.6	83.2	83.4	90.0	91.5	85.6	85.0	88.0	86.2	88.0	87.40	-0.08	40.1	40.3	40.2	40.2	432.00	434.44	06:06
90.7	91.5	85.1	84.8	88.6	89.6	83.3	83.4	90.0	91.5	85.6	85.0	88.0	86.2	88.0	87.42	-0.08	40.1	40.3	40.3	40.2	430.32	432.81	06:07
90.7	91.5	85.1	84.8	88.6	89.6	83.2	83.4	90.0	91.5	85.6	85.0	88.0	86.2	88.0	87.42	-0.08	40.1	40.3	40.3	40.2	430.40	432.95	06:08
90.7	91.5	85.1	84.8	88.6	89.6	83.3	83.4	90.0	91.5	85.6	85.0	88.0	86.2	88.0	87.42	-0.08	40.1	40.3	40.3	40.2	430.88	433.45	06:09
90.7	91.5	85.1	84.8	88.6	89.6	83.2	83.4	90.0	91.5	85.6	85.0	88.0	86.2	88.0	87.42	-0.08	40.1	40.2	40.2	40.2	431.52	433.98	06:10
90.7	91.5	85.1	84.8	88.6	89.6	83.2	83.4	90.0	91.5	85.6	85.0	88.0	86.2	88.0	87.41	-0.08	40.1	40.3	40.2	40.2	430.56	433.03	06:11
90.7	91.5	85.1	84.8	88.6	89.6	83.2	83.4	90.0	91.5	85.6	85.0	88.0	86.2	88.0	87.42	-0.08	40.1	40.3	40.3	40.2	431.20	433.68	06:12
90.7	91.5	85.1	84.8	88.6	89.6	83.3	83.4	90.0	91.5	85.6	85.0	88.0	86.2	88.0	87.42	-0.08	40.1	40.3	40.3	40.2	430.56	433.13	06:13
90.7	91.5	85.1	84.8	88.6	89.6	83.3	83.4	90.0	91.5	85.6	85.0	88.0	86.2	88.0	87.42	-0.07	40.1	40.3	40.3	40.3	431.04	433.68	06:14
90.7	91.5	85.1	84.8	88.6	89.6	83.2	83.4	90.0	91.5	85.6	85.0	88.0	86.2	88.0	87.41	-0.07	40.1	40.3	40.2	40.2	431.36	433.91	06:15
90.7	91.5	85.1	84.8	88.6	89.6	83.3	83.4	90.1	91.5	85.6	85.0	88.0	86.2	88.0	87.43	-0.07	40.1	40.3	40.3	40.2	431.44	433.99	06:16
90.7	91.5	85.1	84.8	88.6	89.6	83.3	83.4	90.1	91.5	85.6	85.0	88.0	86.2	88.0	87.43	-0.07	40.1	40.3	40.2	40.2	430.72	433.22	06:17
90.7	91.5	85.1	84.8	88.6	89.6	83.2	83.4	90.0	91.5	85.6	85.0	88.0	86.2	88.0	87.43	-0.06	40.1	40.3	40.3	40.2	431.68	434.23	06:18
90.7	91.5	85.1	84.8	88.6	89.6	83.2	83.4	90.0	91.5	85.6	85.0	88.0	86.2	88.0	87.42	-0.06	40.1	40.3	40.2	40.2	433.20	435.68	06:19
90.7	91.5	85.1	84.8	88.6	89.6	83.3	83.4	90.0	91.5	85.6	85.0	88.0	86.2	88.0	87.41	-0.06	40.1	40.3	40.3	40.2	432.32	434.93	06:20
90.7	91.5	85.1	84.8	88.7	89.6	83.3	83.4	90.0	91.5	85.6	85.0	88.0	86.2	88.0	87.43	-0.05	40.1	40.3	40.3	40.2	432.48	434.96	06:21
90.7	91.5	85.1	84.8	88.6	89.6	83.3	83.4	90.1	91.5	85.6	85.0	88.0	86.2	88.0	87.42	-0.05	40.1	40.3	40.2	40.2	432.32	434.83	06:22
90.7	91.5	85.1	84.8	88.6	89.6	83.3	83.4	90.1	91.5	85.6	85.0	88.0	86.2	88.0	87.43	-0.05	40.1	40.3	40.2	40.2	432.56	434.99	06:23
90.7	91.5	85.1	84.8	88.7	89.6	83.3	83.4	90.1	91.5	85.6	85.0	88.0	86.2	88.0	87.43	-0.05	40.1	40.2	40.3	40.2	431.36	433.76	06:24
90.7	91.5	85.1	84.8	88.7	89.6	83.3	83.4	90.1	91.5	85.6	85.0	88.0	86.2	88.0	87.43	-0.04	40.0	40.3	40.3	40.2	432.56	434.90	06:25

COMMENTS

Tested By Frank A. Deeney Date 4-6-93 Reviewed By C L Sutledge Date 4-6-93

AMPACITY TEST. JOB NUMBER 93-0501. SAMPLE NUMBER 93-0501-02 DATA FILE 475002no.002 04-02-1993 F-

POSITION 1				POSITION 2				POSITION 3				POSITION AVG			AVG		AMBIENT TEMPERATURE				AMPS		
Trd1	Twh1	Tgr1	Tbk1	Trd2	Twh2	Tgr2	Tbk2	Trd3	Twh3	Tgr3	Tbk3	Tav1	Tav2	Tav3	Twave	SLOPE	Taa1	Taa2	Taa3	Taav	It	I'	TIME
90.7	91.5	85.1	84.8	88.7	89.6	83.3	83.4	90.1	91.5	85.6	85.0	88.1	86.2	88.0	87.45	-0.03	40.1	40.3	40.2	40.2	432.80	435.06	06:26
90.7	91.5	85.1	84.8	88.7	89.6	83.3	83.4	90.1	91.5	85.6	85.0	88.1	86.2	88.0	87.44	-0.03	40.1	40.3	40.2	40.2	432.24	434.57	06:27
90.7	91.5	85.1	84.8	88.6	89.6	83.3	83.4	90.0	91.5	85.6	85.0	88.0	86.2	88.0	87.42	-0.03	40.1	40.3	40.3	40.2	432.16	434.68	06:28
90.7	91.5	85.1	84.8	88.7	89.6	83.3	83.4	90.1	91.5	85.6	85.0	88.1	86.2	88.0	87.44	-0.02	40.1	40.3	40.3	40.2	432.80	435.32	06:29
90.7	91.5	85.2	84.8	88.7	89.6	83.3	83.4	90.1	91.5	85.6	85.0	88.1	86.2	88.1	87.46	-0.01	40.1	40.3	40.3	40.2	431.44	433.86	06:30
90.7	91.5	85.2	84.8	88.7	89.6	83.3	83.4	90.1	91.5	85.6	85.0	88.1	86.2	88.0	87.45	-0.01	40.1	40.3	40.3	40.2	431.84	434.33	06:31
90.7	91.5	85.2	84.8	88.7	89.6	83.3	83.4	90.0	91.5	85.6	85.0	88.0	86.2	88.0	87.43	-0.01	40.1	40.3	40.2	40.2	430.48	432.94	06:32
90.7	91.5	85.1	84.8	88.6	89.6	83.3	83.4	90.0	91.5	85.6	85.0	88.0	86.2	88.0	87.44	-0.00	40.1	40.3	40.2	40.2	431.36	433.77	06:33
90.7	91.5	85.1	84.8	88.6	89.6	83.3	83.4	90.1	91.5	85.6	85.0	88.0	86.2	88.0	87.44	0.00	40.1	40.3	40.4	40.3	430.48	433.13	06:34
90.7	91.5	85.1	84.8	88.6	89.6	83.3	83.4	90.0	91.5	85.6	85.0	88.0	86.2	88.0	87.43	0.00	40.1	40.3	40.2	40.2	432.00	434.51	06:35
90.7	91.5	85.1	84.8	88.7	89.6	83.3	83.4	90.1	91.5	85.6	85.0	88.0	86.2	88.0	87.44	0.01	40.1	40.3	40.2	40.2	431.52	434.00	06:36
90.7	91.5	85.1	84.8	88.6	89.6	83.3	83.4	90.1	91.5	85.6	85.0	88.0	86.2	88.0	87.43	0.01	40.1	40.3	40.3	40.2	432.00	434.57	06:37
90.7	91.5	85.1	84.8	88.6	89.6	83.3	83.4	90.1	91.5	85.6	85.0	88.0	86.2	88.0	87.43	0.01	40.1	40.3	40.4	40.3	430.56	433.28	06:38
90.7	91.5	85.1	84.8	88.6	89.6	83.3	83.4	90.1	91.5	85.6	85.0	88.0	86.2	88.0	87.43	0.01	40.1	40.3	40.2	40.2	431.04	433.49	06:39
90.7	91.5	85.1	84.8	88.6	89.6	83.2	83.4	90.0	91.5	85.6	85.0	88.0	86.2	88.0	87.42	0.01	40.1	40.3	40.2	40.2	430.48	432.95	06:40
90.7	91.5	85.1	84.8	88.6	89.6	83.3	83.4	90.0	91.5	85.6	85.0	88.0	86.2	88.0	87.42	0.01	40.1	40.3	40.2	40.2	430.88	433.42	06:41
90.7	91.5	85.1	84.8	88.6	89.6	83.3	83.4	90.0	91.5	85.6	85.0	88.0	86.2	88.0	87.41	0.01	40.1	40.3	40.3	40.2	431.44	433.96	06:42
90.7	91.5	85.1	84.8	88.6	89.6	83.3	83.4	90.1	91.5	85.6	85.0	88.0	86.2	88.0	87.43	0.01	40.1	40.3	40.2	40.2	431.36	433.73	06:43
90.7	91.5	85.1	84.8	88.6	89.6	83.2	83.4	90.0	91.5	85.6	85.0	88.0	86.2	88.0	87.42	0.02	40.1	40.3	40.3	40.2	431.12	433.67	06:44
90.7	91.5	85.1	84.8	88.6	89.6	83.2	83.4	90.0	91.5	85.6	85.0	88.0	86.2	88.0	87.42	0.01	40.1	40.3	40.2	40.2	431.04	433.52	06:45
90.7	91.5	85.1	84.8	88.6	89.6	83.3	83.4	90.0	91.5	85.6	85.0	88.0	86.2	88.0	87.42	0.01	40.1	40.3	40.2	40.2	431.36	433.71	06:46
90.7	91.5	85.1	84.8	88.6	89.6	83.2	83.4	90.0	91.5	85.6	85.0	88.0	86.2	88.0	87.42	0.01	40.1	40.3	40.2	40.2	431.52	433.99	06:47
90.7	91.5	85.1	84.8	88.6	89.6	83.2	83.4	90.0	91.5	85.6	85.0	88.0	86.2	88.0	87.41	0.01	40.1	40.3	40.2	40.2	432.00	434.48	06:48
90.7	91.5	85.1	84.8	88.6	89.6	83.2	83.4	90.0	91.5	85.6	85.0	88.0	86.2	88.0	87.42	0.01	40.1	40.3	40.2	40.2	434.24	436.65	06:49
90.7	91.5	85.1	84.8	88.6	89.6	83.3	83.4	90.0	91.5	85.6	85.0	88.0	86.2	88.0	87.42	0.01	40.1	40.3	40.2	40.2	434.08	436.44	06:50
90.7	91.5	85.1	84.8	88.6	89.6	83.2	83.4	90.1	91.5	85.6	85.0	88.0	86.2	88.0	87.43	0.01	40.1	40.3	40.2	40.2	433.44	435.87	06:51
90.7	91.5	85.1	84.8	88.6	89.6	83.3	83.4	90.1	91.5	85.6	85.0	88.0	86.2	88.1	87.44	0.01	40.1	40.3	40.2	40.2	433.44	435.85	06:52
90.7	91.5	85.1	84.8	88.6	89.6	83.3	83.4	90.0	91.5	85.6	85.0	88.0	86.2	88.0	87.42	0.01	40.1	40.3	40.2	40.2	432.80	435.20	06:53
90.7	91.5	85.1	84.8	88.6	89.6	83.3	83.4	90.0	91.5	85.6	85.0	88.0	86.2	88.0	87.43	0.01	40.1	40.3	40.2	40.2	432.64	435.06	06:54
90.7	91.5	85.1	84.8	88.6	89.6	83.3	83.4	90.0	91.5	85.6	85.0	88.0	86.2	88.0	87.42	0.01	40.1	40.3	40.3	40.2	430.64	433.30	06:55
90.7	91.5	85.1	84.8	88.6	89.6	83.3	83.4	90.0	91.5	85.6	85.0	88.0	86.2	88.0	87.43	0.01	40.1	40.3	40.3	40.2	432.00	434.51	06:56
90.7	91.5	85.1	84.8	88.6	89.6	83.3	83.4	90.1	91.5	85.6	85.0	88.0	86.2	88.0	87.43	0.01	40.1	40.3	40.2	40.2	431.12	433.54	06:57
90.7	91.5	85.1	84.8	88.6	89.6	83.3	83.4	90.1	91.5	85.6	85.0	88.0	86.2	88.1	87.44	0.01	40.1	40.3	40.2	40.2	431.76	434.14	06:58
90.7	91.5	85.1	84.8	88.6	89.6	83.2	83.4	90.0	91.5	85.6	85.0	88.0	86.2	88.0	87.43	0.01	40.1	40.3	40.2	40.2	432.40	434.84	06:59
90.7	91.5	85.1	84.8	88.7	89.6	83.3	83.4	90.1	91.5	85.6	85.0	88.0	86.2	88.1	87.44	0.01	40.1	40.3	40.2	40.2	432.48	434.85	07:00
90.7	91.5	85.1	84.8	88.7	89.6	83.3	83.4	90.1	91.5	85.6	85.0	88.0	86.2	88.0	87.44	0.01	40.1	40.3	40.3	40.2	431.84	434.33	07:01
90.7	91.5	85.1	84.8	88.7	89.6	83.3	83.4	90.1	91.5	85.6	85.0	88.1	86.2	88.0	87.45	0.01	40.1	40.3	40.3	40.2	431.84	434.30	07:02
90.7	91.5	85.2	84.8	88.7	89.6	83.3	83.4	90.1	91.5	85.6	85.1	88.1	86.2	88.1	87.45	0.01	40.2	40.3	40.3	40.3	430.88	433.44	07:03
90.7	91.5	85.2	84.8	88.7	89.6	83.3	83.4	90.1	91.5	85.6	85.0	88.1	86.2	88.1	87.45	0.01	40.1	40.3	40.3	40.2	430.88	433.35	07:04
90.7	91.5	85.1	84.8	88.7	89.6	83.3	83.4	90.0	91.5	85.6	85.0	88.0	86.2	88.0	87.43	0.01	40.2	40.3	40.3	40.2	430.08	432.59	07:05
90.7	91.5	85.1	84.8	88.7	89.6	83.3	83.4	90.1	91.5	85.6	85.0	88.1	86.2	88.0	87.44	0.01	40.1	40.3	40.3	40.2	430.80	433.35	07:06
90.7	91.5	85.1	84.8	88.6	89.6	83.3	83.4	90.0	91.5	85.6	85.0	88.0	86.2	88.0	87.44	0.01	40.1	40.3	40.2	40.2	431.84	434.38	07:07
90.7	91.5	85.1	84.8	88.7	89.6	83.3	83.4	90.1	91.5	85.6	85.0	88.1	86.2	88.0	87.44	0.01	40.1	40.3	40.3	40.2	432.40	434.99	07:08
90.7	91.5	85.1	84.8	88.7	89.6	83.3	83.4	90.1	91.5	85.6	85.0	88.1	86.2	88.1	87.45	0.01	40.2	40.3	40.3	40.3	432.48	435.12	07:09
90.7	91.5	85.1	84.8	88.7	89.6	83.3	83.4	90.1	91.5	85.6	85.0	88.0	86.2	88.0	87.44	0.01	40.2	40.3	40.3	40.2	432.32	434.91	07:10
90.7	91.5	85.1	84.8	88.7	89.6	83.3	83.4	90.1	91.5	85.6	85.0	88.0	86.2	88.0	87.44	0.01	40.1	40.3	40.3	40.2	432.08	434.60	07:11
90.7	91.5	85.1	84.8	88.6	89.6	83.3	83.4	90.0	91.5	85.6	85.0	88.0	86.2	88.0	87.43	0.01	40.2	40.3	40.3	40.3	432.40	435.07	07:12
90.7	91.5	85.1	84.8	88.7	89.6	83.3	83.4	90.1	91.5	85.6	85.0	88.1	86.2	88.0	87.44	0.01	40.1	40.3	40.2	40.2	432.00	434.39	07:13
90.7	91.5	85.1	84.8	88.6	89.6	83.3	83.4	90.0	91.5	85.6	85.0	88.0	86.2	88.0	87.43	0.01	40.2	40.3	40.3	40.2	431.84	434.40	07:14
90.7	91.5	85.1	84.8	88.7	89.6	83.3	83.4	90.1	91.5	85.6	85.0	88.1	86.2	88.1	87.45	0.01	40.2	40.3	40.3	40.3	432.32	434.89	07:15
90.7	91.5	85.2	84.8	88.7	89.6	83.3	83.4	90.1	91.5	85.6	85.0	88.1	86.2	88.1	87.45	0.01	40.2	40.3	40.3	40.3	431.76	434.34	07:16
90.7	91.5	85.1	84.8	88.6	89.6	83.3	83.4	90.0	91.5	85.6	85.0	88.0	86.2	88.0	87.43	0.01	40.1	40.3	40.3	40.2	432.96	435.47	07:17
90.7	91.5	85.1	84.8	88.7	89.6	83.3	83.4	90.1	91.5	85.6	85.0	88.0	86.2	88.0	87.44	0.01	40.1	40.3	40.2	40.2	432.80	435.25	07:18
90.7	91.5	85.1	84.8	88.6	89.6	83.3	83.4	90.1	91.5	85.6	85.0	88.0	86.2	88.0	87.43	0.01	40.2	40.3	40.2	40.2	432.16	434.68	07:19
90.7	91.5	85.1	84.8	88.6	89.6	83.3	83.4	90.1	91.5	85.6	85.0	88.0	86.2	88.1	87.44	0.01	40.1	40.3	40.3	40.2	431.12	433.65	07:20
90.7	91.5	85.1	84.8	88.7	89.6	83.3	83.4	90.1	91.5	85.6	85.0	88.0	86.2	88.0	87.44	0.01	40.2	40.3	40.4	40.3	430.24	432.91	07:21
90.7	91.5	85.1	84.8	88.6	89.6	83.3	83.4	90.1	91.5	85.6	85.0	88.0	86.2	88.0	87.43	0.01	40.1	40.3	40.3	40.2	431.28	433.90	07:22
90.7	91.5	85.1	84.8	88.6	89.6	83.2	83.4	90.0	91.5	85.6	85.0	88.0	86.2	88.0	87.42	0.01	40.2	40.3	40.3	40.3	432.32	435.06	07:23
90.7	91.5	85.1	84.8	88.6	89.6	83.3	83.4	90.0	91.5	85.6	85.0	88.0	86.2	88.0	87.43	0.01	40.2	40.3	40.3	40.3	431.20	433.93	07:24
90.7	91.5	85.1	84.8	88.6	89.6	83.2	83.4	90.1	91.5	85.6	85.0	88.0	86.2	88.0	87.42	0.00	40.1	40.3	40.3	40.3	431.36	434.04	07:25

COMMENTS

Tested By Frank G. Denez Date 4-6-93 Reviewed By C.L. Rutledge Date 4-6-93

POSITION 1				POSITION 2				POSITION 3				POSITION AVG			AVG		AMBIENT TEMPERATURE				AMPS		
Trd1	Twh1	Tgr1	Tbk1	Trd2	Twh2	Tgr2	Tbk2	Trd3	Twh3	Tgr3	Tbk3	Tav1	Tav2	Tav3	Twave	SLOPE	Tam1	Tam2	Tam3	Taav	It	I'	TIME
90.7	91.5	85.1	84.8	88.6	89.6	83.3	83.4	90.0	91.5	85.6	85.0	88.0	86.2	88.0	87.43	0.01	40.2	40.3	40.3	40.3	431.04	433.74	07:26
90.7	91.5	85.1	84.8	88.6	89.6	83.3	83.4	90.0	91.5	85.6	85.1	88.0	86.2	88.0	87.43	0.01	40.2	40.3	40.3	40.3	431.92	434.60	07:27
90.7	91.5	85.1	84.8	88.7	89.6	83.3	83.4	90.1	91.5	85.6	85.0	88.0	86.2	88.1	87.45	0.01	40.2	40.3	40.3	40.2	431.28	433.72	07:28
90.7	91.5	85.1	84.8	88.6	89.6	83.3	83.4	90.1	91.5	85.6	85.0	88.0	86.2	88.0	87.43	0.01	40.2	40.3	40.3	40.3	431.60	434.23	07:29
90.7	91.5	85.1	84.8	88.6	89.6	83.3	83.4	90.1	91.5	85.6	85.1	88.0	86.2	88.1	87.44	0.01	40.2	40.3	40.3	40.3	431.52	434.17	07:30
90.7	91.5	85.1	84.8	88.6	89.6	83.3	83.4	90.1	91.5	85.6	85.0	88.0	86.2	88.1	87.44	0.01	40.2	40.3	40.3	40.3	432.24	434.99	07:31
90.7	91.5	85.1	84.8	88.6	89.6	83.3	83.4	90.1	91.5	85.6	85.0	88.0	86.2	88.0	87.44	0.01	40.2	40.3	40.3	40.3	431.04	433.72	07:32
90.7	91.5	85.1	84.8	88.7	89.6	83.3	83.4	90.1	91.5	85.6	85.0	88.0	86.2	88.0	87.44	0.01	40.2	40.3	40.3	40.3	429.76	432.39	07:33
90.7	91.5	85.1	84.8	88.6	89.6	83.2	83.4	90.0	91.5	85.6	85.0	88.0	86.2	88.0	87.41	0.01	40.2	40.3	40.3	40.3	429.60	432.33	07:34
90.7	91.5	85.1	84.8	88.6	89.6	83.2	83.4	90.0	91.5	85.6	85.0	88.0	86.2	88.0	87.42	0.01	40.2	40.3	40.3	40.3	431.12	433.87	07:35
90.7	91.5	85.1	84.8	88.6	89.6	83.3	83.4	90.0	91.5	85.6	85.0	88.0	86.2	88.0	87.43	0.01	40.1	40.3	40.3	40.2	430.88	433.54	07:36
90.7	91.5	85.1	84.8	88.6	89.6	83.3	83.4	90.1	91.5	85.6	85.0	88.0	86.2	88.0	87.43	0.01	40.1	40.3	40.3	40.3	430.96	433.65	07:37
90.7	91.5	85.1	84.8	88.6	89.6	83.2	83.4	90.0	91.5	85.6	85.0	88.0	86.2	88.0	87.42	0.01	40.2	40.3	40.3	40.3	432.08	434.77	07:38
90.7	91.5	85.1	84.8	88.6	89.6	83.2	83.4	90.0	91.5	85.6	85.0	88.0	86.2	88.0	87.42	0.01	40.1	40.3	40.3	40.2	431.20	433.81	07:39
90.7	91.5	85.1	84.8	88.6	89.6	83.2	83.4	90.0	91.5	85.6	85.0	88.0	86.2	88.0	87.42	0.01	40.2	40.3	40.4	40.3	431.52	434.44	07:40
90.7	91.5	85.1	84.8	88.6	89.6	83.3	83.4	90.1	91.5	85.6	85.0	88.0	86.2	88.1	87.43	0.01	40.2	40.3	40.3	40.3	430.24	432.93	07:41
90.7	91.5	85.1	84.8	88.6	89.6	83.2	83.4	90.0	91.5	85.6	85.0	88.0	86.2	88.0	87.42	0.00	40.2	40.3	40.3	40.3	431.04	433.86	07:42
90.7	91.5	85.1	84.8	88.6	89.6	83.3	83.4	90.1	91.5	85.6	85.0	88.0	86.2	88.0	87.43	0.00	40.2	40.3	40.3	40.3	431.04	433.74	07:43
90.7	91.5	85.1	84.8	88.6	89.6	83.2	83.4	90.0	91.5	85.6	85.0	88.0	86.2	88.0	87.41	-0.00	40.2	40.3	40.3	40.3	431.20	433.94	07:44
90.7	91.5	85.1	84.8	88.6	89.6	83.2	83.4	90.0	91.5	85.6	85.0	88.0	86.2	88.0	87.42	-0.00	40.2	40.3	40.3	40.2	431.76	434.40	07:45
90.7	91.5	85.1	84.8	88.6	89.6	83.3	83.4	90.0	91.5	85.6	85.0	88.0	86.2	88.0	87.42	-0.01	40.1	40.3	40.3	40.3	431.52	434.21	07:46
90.7	91.5	85.1	84.8	88.6	89.6	83.3	83.4	90.0	91.5	85.6	85.0	88.0	86.2	88.0	87.42	-0.01	40.1	40.3	40.3	40.2	430.08	432.76	07:47
90.7	91.5	85.1	84.8	88.6	89.6	83.2	83.4	90.0	91.5	85.6	85.0	88.0	86.2	88.0	87.41	-0.01	40.2	40.3	40.2	40.2	430.08	432.78	07:48
90.7	91.5	85.1	84.8	88.6	89.6	83.2	83.4	90.1	91.5	85.6	85.0	88.0	86.2	88.0	87.42	-0.02	40.2	40.3	40.3	40.3	430.56	433.21	07:49
90.7	91.5	85.1	84.8	88.6	89.6	83.2	83.4	90.0	91.5	85.6	85.0	88.0	86.2	88.0	87.42	-0.02	40.2	40.3	40.3	40.3	430.72	433.44	07:50
90.7	91.5	85.1	84.8	88.6	89.6	83.2	83.4	90.0	91.5	85.6	85.0	88.0	86.2	88.0	87.41	-0.02	40.2	40.3	40.3	40.3	430.32	433.02	07:51
90.6	91.4	85.1	84.8	88.6	89.5	83.2	83.4	90.0	91.4	85.6	85.0	88.0	86.2	88.0	87.38	-0.02	40.1	40.3	40.3	40.2	431.20	434.00	07:52
90.6	91.5	85.1	84.8	88.6	89.6	83.2	83.4	90.0	91.5	85.6	85.0	88.0	86.2	88.0	87.40	-0.03	40.1	40.3	40.3	40.2	430.64	433.31	07:53
90.6	91.5	85.1	84.8	88.6	89.6	83.2	83.4	90.0	91.5	85.6	85.0	88.0	86.2	88.0	87.40	-0.03	40.2	40.3	40.3	40.3	430.96	433.74	07:54
90.6	91.4	85.1	84.8	88.6	89.6	83.2	83.4	90.0	91.4	85.6	85.0	88.0	86.2	88.0	87.38	-0.04	40.2	40.3	40.3	40.2	429.12	431.84	07:55
90.6	91.4	85.1	84.8	88.6	89.5	83.2	83.4	90.0	91.4	85.6	85.0	88.0	86.2	88.0	87.39	-0.04	40.2	40.3	40.3	40.3	430.56	433.38	07:56
90.7	91.5	85.1	84.8	88.6	89.6	83.2	83.4	90.0	91.4	85.6	85.0	88.0	86.2	88.0	87.39	-0.05	40.1	40.3	40.3	40.2	430.00	432.65	07:57
90.6	91.5	85.1	84.8	88.6	89.6	83.2	83.4	90.0	91.5	85.6	85.0	88.0	86.2	88.0	87.40	-0.05	40.2	40.3	40.3	40.3	429.76	432.48	07:58
90.6	91.4	85.0	84.8	88.6	89.5	83.2	83.4	90.0	91.4	85.6	85.0	88.0	86.2	88.0	87.38	-0.05	40.2	40.3	40.2	40.2	428.80	431.54	07:59
90.6	91.4	85.1	84.8	88.6	89.5	83.2	83.4	90.0	91.4	85.6	85.0	88.0	86.2	88.0	87.38	-0.05	40.2	40.3	40.3	40.2	430.48	433.20	08:00
90.6	91.5	85.1	84.7	88.6	89.5	83.2	83.4	90.0	91.4	85.5	85.0	88.0	86.2	88.0	87.38	-0.06	40.2	40.3	40.2	40.2	429.44	432.14	08:01
90.7	91.5	85.1	84.8	88.6	89.5	83.2	83.4	90.0	91.4	85.6	84.9	88.0	86.2	88.0	87.39	-0.06	40.1	40.3	40.3	40.2	430.08	432.79	08:02
90.6	91.4	85.0	84.8	88.6	89.5	83.2	83.3	90.0	91.4	85.6	84.9	88.0	86.2	88.0	87.37	-0.06	40.2	40.3	40.3	40.3	429.44	432.28	08:03
90.6	91.4	85.0	84.8	88.6	89.5	83.2	83.3	90.0	91.4	85.6	84.9	88.0	86.2	88.0	87.37	-0.06	40.2	40.3	40.3	40.3	430.88	433.83	08:04
90.6	91.4	85.1	84.7	88.6	89.5	83.2	83.4	90.0	91.4	85.5	85.0	88.0	86.2	88.0	87.37	-0.07	40.2	40.3	40.4	40.3	430.32	433.43	08:05
90.6	91.4	85.1	84.7	88.6	89.5	83.2	83.4	90.0	91.4	85.6	85.0	88.0	86.2	88.0	87.37	-0.07	40.2	40.3	40.4	40.3	430.72	433.75	08:06
90.6	91.4	85.1	84.7	88.6	89.5	83.2	83.4	90.0	91.4	85.6	85.0	88.0	86.2	88.0	87.38	-0.07	40.2	40.3	40.3	40.3	429.92	432.91	08:07
90.6	91.4	85.1	84.7	88.6	89.5	83.2	83.4	90.0	91.4	85.5	84.9	88.0	86.2	88.0	87.37	-0.08	40.2	40.3	40.3	40.3	428.80	431.74	08:08
90.6	91.4	85.0	84.8	88.6	89.5	83.2	83.3	90.0	91.4	85.6	84.9	87.9	86.1	88.0	87.35	-0.08	40.2	40.3	40.3	40.3	429.36	432.46	08:09
90.6	91.4	85.1	84.8	88.6	89.5	83.2	83.4	90.0	91.4	85.6	85.0	88.0	86.2	88.0	87.37	-0.08	40.2	40.3	40.3	40.3	429.68	432.64	08:10
90.6	91.4	85.0	84.8	88.6	89.5	83.2	83.3	90.0	91.4	85.6	85.0	87.9	86.2	88.0	87.37	-0.08	40.2	40.3	40.3	40.3	429.20	432.14	08:11
90.6	91.4	85.0	84.7	88.6	89.5	83.2	83.3	90.0	91.4	85.6	85.0	87.9	86.1	88.0	87.36	-0.09	40.2	40.3	40.3	40.3	430.72	433.71	08:12
90.6	91.4	85.0	84.7	88.6	89.5	83.2	83.3	90.0	91.4	85.5	85.0	87.9	86.1	88.0	87.35	-0.09	40.2	40.3	40.3	40.3	430.32	433.28	08:13
90.6	91.4	85.0	84.7	88.6	89.5	83.2	83.3	90.0	91.4	85.6	84.9	87.9	86.1	88.0	87.35	-0.09	40.2	40.3	40.3	40.3	430.80	433.81	08:14
90.6	91.4	85.0	84.7	88.5	89.5	83.2	83.3	90.0	91.4	85.5	85.0	87.9	86.1	88.0	87.34	-0.09	40.2	40.3	40.3	40.3	431.20	434.34	08:15
90.6	91.4	85.0	84.7	88.5	89.5	83.2	83.3	90.0	91.4	85.5	85.0	87.9	86.1	88.0	87.35	-0.10	40.2	40.3	40.3	40.3	430.88	434.02	08:16
90.6	91.4	85.0	84.7	88.5	89.5	83.2	83.3	89.9	91.4	85.5	84.9	87.9	86.1	87.9	87.32	-0.10	40.2	40.3	40.4	40.3	431.36	434.56	08:17
90.6	91.4	85.0	84.7	88.5	89.5	83.2	83.3	90.0	91.4	85.5	84.9	87.9	86.1	88.0	87.34	-0.10	40.2	40.3	40.2	40.2	429.76	432.63	08:18
90.6	91.4	85.0	84.7	88.5	89.5	83.2	83.3	90.0	91.4	85.5	84.9	87.9	86.1	88.0	87.34	-0.11	40.2	40.3	40.3	40.3	431.84	434.92	08:19
90.6	91.4	85.0	84.7	88.5	89.5	83.2	83.3	90.0	91.4	85.6	85.0	87.9	86.1	88.0	87.35	-0.11	40.2	40.3	40.3	40.3	431.52	434.50	08:20
90.6	91.4	85.0	84.7	88.5	89.5	83.2	83.3	90.0	91.4	85.5	85.0	87.9	86.1	88.0	87.34	-0.11	40.2	40.3	40.3	40.2	431.12	434.12	08:21
90.6	91.4	85.0	84.7	88.5	89.5	83.2	83.3	90.0	91.4	85.5	84.9	87.9	86.1	88.0	87.33	-0.11	40.2	40.3	40.3	40.3	430.48	433.63	08:22
90.6	91.4	85.0	84.7	88.5	89.5	83.2	83.3	90.0	91.4	85.5	85.0	87.9	86.1	88.0	87.33	-0.12	40.2	40.3	40.3	40.3	431.52	434.65	08:23
90.6	91.4	85.0	84.7	88.5	89.5	83.2	83.3	90.0	91.4	85.5	84.9	87.9	86.1	88.0	87.34	-0.12	40.2	40.3	40.3	40.3	431.60	434.75	08:24
90.6	91.4	85.0	84.7	88.5	89.5	83.2	83.3	90.0	91.4	85.5	84.9	87.9	86.1	88.0	87.33	-0.12	40.2	40.3	40.3	40.3	431.52	434.63	08:25

COMMENTS

Tested By Frank A. Dumey Date 4-6-93 Reviewed By C.L. Rutledge Date 4-6-93

AMPACITY TEST. JOB NUMBER 93-0501. SAMPLE NUMBER 93-0501-03 DATA FILE 475003no.002 04-06-1993

POSITION 1				POSITION 2				POSITION 3				POSITION AVG			AVG		AMBIENT TEMPERATURE				AMPS		
Trd1	Twh1	Tgr1	Tbk1	Trd2	Twh2	Tgr2	Tbk2	Trd3	Twh3	Tgr3	Tbk3	Tav1	Tav2	Tav3	Twave	SLOPE	Tam1	Tam2	Tam3	Taav	It	I'	TIME
90.7	90.4	84.4	83.8	90.7	90.0	84.5	83.8	92.4	91.4	86.0	85.7	87.3	87.2	88.9	87.82	0.02	40.5	40.6	40.8	40.6	423.12	423.19	03:03
90.7	90.4	84.4	83.8	90.7	89.9	84.5	83.8	92.3	91.4	86.0	85.7	87.3	87.2	88.9	87.79	0.02	40.4	40.6	40.8	40.6	422.96	423.04	03:04
90.7	90.4	84.4	83.8	90.7	89.9	84.5	83.8	92.4	91.4	85.9	85.7	87.3	87.2	88.9	87.80	0.01	40.5	40.6	40.8	40.6	422.88	422.88	03:05
90.7	90.4	84.5	83.7	90.7	90.0	84.5	83.8	92.4	91.4	85.9	85.7	87.3	87.3	88.9	87.82	0.01	40.5	40.6	40.8	40.6	421.36	421.40	03:06
90.7	90.5	84.5	83.8	90.7	90.0	84.5	83.8	92.4	91.4	86.0	85.7	87.3	87.3	88.9	87.82	0.01	40.5	40.6	40.8	40.6	422.16	422.02	03:07
90.7	90.5	84.4	83.7	90.7	90.0	84.6	83.8	92.4	91.4	85.9	85.7	87.3	87.3	88.9	87.81	0.02	40.5	40.6	40.8	40.6	422.32	422.38	03:08
90.7	90.4	84.4	83.7	90.7	89.9	84.5	83.7	92.3	91.4	85.9	85.7	87.3	87.2	88.8	87.78	0.01	40.5	40.6	40.8	40.6	422.80	422.90	03:09
90.7	90.4	84.4	83.7	90.7	89.9	84.5	83.8	92.4	91.4	86.0	85.7	87.3	87.2	88.9	87.80	0.01	40.5	40.6	40.8	40.6	422.80	422.80	03:10
90.7	90.4	84.5	83.8	90.7	89.9	84.5	83.8	92.4	91.4	85.9	85.7	87.3	87.2	88.8	87.81	0.01	40.4	40.6	40.7	40.6	422.56	422.47	03:11
90.7	90.5	84.5	83.8	90.7	89.9	84.6	83.8	92.4	91.4	86.0	85.7	87.3	87.2	88.9	87.82	0.01	40.5	40.6	40.8	40.6	423.44	423.52	03:12
90.7	90.5	84.5	83.8	90.7	89.9	84.6	83.8	92.4	91.4	86.0	85.7	87.3	87.2	88.9	87.82	0.01	40.4	40.6	40.7	40.6	422.80	422.71	03:13
90.7	90.4	84.4	83.8	90.7	89.9	84.5	83.8	92.4	91.4	86.0	85.7	87.3	87.2	88.9	87.81	0.01	40.5	40.6	40.8	40.6	422.64	422.76	03:14
90.7	90.4	84.5	83.8	90.7	90.0	84.6	83.8	92.4	91.4	86.0	85.7	87.3	87.3	88.9	87.82	0.01	40.5	40.6	40.8	40.6	422.00	421.95	03:15
90.7	90.4	84.4	83.8	90.7	89.9	84.5	83.8	92.4	91.4	86.0	85.7	87.3	87.2	88.9	87.81	0.01	40.5	40.6	40.8	40.6	422.08	422.06	03:16
90.7	90.4	84.5	83.7	90.7	89.9	84.6	83.8	92.3	91.4	85.9	85.7	87.3	87.2	88.9	87.81	0.01	40.5	40.6	40.8	40.6	422.56	422.60	03:17
90.7	90.5	84.4	83.7	90.7	90.0	84.5	83.8	92.4	91.4	85.9	85.7	87.3	87.2	88.9	87.82	0.01	40.5	40.6	40.8	40.6	422.56	422.61	03:18
90.7	90.4	84.4	83.7	90.7	89.9	84.5	83.8	92.4	91.4	85.9	85.7	87.3	87.2	88.9	87.81	0.01	40.5	40.6	40.8	40.6	422.56	422.62	03:19
90.7	90.4	84.5	83.7	90.7	90.0	84.6	83.8	92.4	91.4	85.9	85.7	87.3	87.3	88.9	87.82	0.01	40.5	40.6	40.8	40.6	422.56	422.53	03:20
90.7	90.4	84.4	83.8	90.7	90.0	84.5	83.8	92.4	91.4	86.0	85.7	87.3	87.2	88.9	87.81	0.01	40.5	40.7	40.8	40.7	420.88	421.18	03:21
90.7	90.4	84.4	83.7	90.7	89.9	84.5	83.8	92.4	91.4	85.9	85.7	87.3	87.2	88.9	87.81	0.01	40.4	40.6	40.8	40.6	421.92	421.93	03:22
90.7	90.4	84.4	83.7	90.7	89.9	84.5	83.7	92.3	91.4	85.9	85.7	87.3	87.2	88.8	87.79	0.01	40.5	40.7	40.8	40.6	422.08	422.28	03:23
90.7	90.4	84.4	83.8	90.7	89.9	84.5	83.8	92.4	91.4	86.0	85.7	87.3	87.2	88.9	87.81	0.01	40.5	40.6	40.8	40.6	421.92	421.97	03:24
90.7	90.4	84.4	83.7	90.7	89.9	84.5	83.8	92.4	91.4	85.9	85.7	87.3	87.2	88.9	87.80	0.01	40.5	40.6	40.8	40.6	421.84	421.89	03:25
90.7	90.4	84.4	83.7	90.7	89.9	84.5	83.7	92.3	91.4	85.9	85.7	87.3	87.2	88.8	87.79	0.00	40.5	40.6	40.8	40.6	421.92	422.05	03:26
90.7	90.4	84.4	83.7	90.7	89.9	84.5	83.7	92.3	91.4	85.9	85.7	87.3	87.2	88.8	87.79	0.00	40.5	40.6	40.8	40.6	422.00	422.10	03:27
90.7	90.4	84.4	83.7	90.7	89.9	84.5	83.7	92.3	91.4	85.9	85.7	87.3	87.2	88.8	87.79	0.00	40.5	40.6	40.8	40.6	422.00	422.15	03:28
90.7	90.4	84.4	83.7	90.7	89.9	84.5	83.8	92.3	91.4	86.0	85.7	87.3	87.2	88.8	87.80	-0.00	40.5	40.6	40.8	40.6	421.12	421.20	03:29
90.7	90.4	84.4	83.7	90.7	89.9	84.5	83.8	92.3	91.4	85.9	85.7	87.3	87.2	88.8	87.79	-0.00	40.5	40.6	40.8	40.6	422.32	422.35	03:30
90.7	90.4	84.4	83.7	90.7	89.9	84.5	83.7	92.3	91.4	85.9	85.7	87.3	87.2	88.8	87.78	-0.00	40.5	40.6	40.8	40.6	421.52	421.67	03:31
90.7	90.4	84.4	83.7	90.7	89.9	84.5	83.7	92.4	91.4	86.0	85.7	87.3	87.2	88.9	87.80	-0.00	40.5	40.6	40.8	40.6	421.92	421.97	03:32
90.7	90.4	84.4	83.7	90.7	89.9	84.6	83.8	92.3	91.4	85.9	85.7	87.3	87.2	88.8	87.80	-0.00	40.5	40.6	40.8	40.6	421.52	421.53	03:33
90.7	90.4	84.4	83.7	90.7	89.9	84.5	83.8	92.4	91.4	86.0	85.7	87.3	87.2	88.9	87.80	-0.00	40.5	40.6	40.8	40.6	421.20	421.21	03:34
90.7	90.4	84.4	83.7	90.7	89.9	84.5	83.7	92.4	91.4	85.9	85.7	87.3	87.2	88.9	87.79	-0.00	40.4	40.5	40.7	40.6	420.24	420.22	03:35
90.7	90.4	84.4	83.7	90.7	89.9	84.5	83.8	92.3	91.4	85.9	85.7	87.3	87.2	88.8	87.79	-0.01	40.5	40.6	40.7	40.6	421.28	421.26	03:36
90.7	90.4	84.4	83.7	90.7	89.9	84.5	83.7	92.3	91.4	85.9	85.7	87.3	87.2	88.8	87.78	-0.01	40.5	40.6	40.7	40.6	419.52	419.53	03:37
90.7	90.4	84.4	83.7	90.7	89.9	84.5	83.7	92.3	91.4	85.9	85.7	87.3	87.2	88.8	87.77	-0.01	40.5	40.6	40.8	40.6	421.60	421.67	03:38
90.6	90.4	84.4	83.7	90.7	89.9	84.5	83.7	92.3	91.4	85.9	85.7	87.3	87.2	88.8	87.77	-0.02	40.5	40.6	40.8	40.6	421.76	422.08	03:39
90.6	90.4	84.4	83.7	90.7	89.9	84.5	83.7	92.3	91.4	85.9	85.7	87.3	87.2	88.8	87.78	-0.02	40.5	40.6	40.8	40.6	422.72	422.83	03:40
90.6	90.4	84.4	83.7	90.7	89.9	84.5	83.7	92.3	91.4	85.9	85.7	87.3	87.2	88.8	87.77	-0.02	40.5	40.6	40.8	40.6	422.48	422.62	03:41
90.7	90.4	84.4	83.7	90.7	89.9	84.5	83.8	92.3	91.4	85.9	85.7	87.3	87.2	88.8	87.79	-0.02	40.5	40.6	40.8	40.6	422.16	422.27	03:42
90.7	90.4	84.4	83.7	90.7	89.9	84.5	83.8	92.4	91.4	85.9	85.7	87.3	87.2	88.9	87.79	-0.02	40.4	40.6	40.8	40.6	422.32	422.33	03:43
90.7	90.4	84.4	83.7	90.7	89.9	84.5	83.7	92.3	91.4	85.9	85.7	87.3	87.2	88.8	87.78	-0.03	40.5	40.6	40.8	40.6	423.20	423.37	03:44
90.7	90.4	84.4	83.7	90.7	89.9	84.5	83.8	92.4	91.4	86.0	85.7	87.3	87.2	88.9	87.80	-0.03	40.5	40.6	40.8	40.6	421.68	421.64	03:45
90.6	90.4	84.4	83.7	90.7	89.9	84.5	83.8	92.3	91.4	85.9	85.7	87.3	87.2	88.8	87.77	-0.03	40.5	40.6	40.8	40.6	422.64	422.82	03:46
90.7	90.4	84.4	83.7	90.7	89.9	84.5	83.8	92.3	91.4	85.9	85.7	87.3	87.2	88.8	87.78	-0.03	40.5	40.6	40.8	40.6	420.88	420.98	03:47
90.6	90.4	84.4	83.7	90.7	89.9	84.5	83.8	92.3	91.4	85.9	85.7	87.3	87.2	88.8	87.78	-0.03	40.4	40.6	40.8	40.6	422.16	422.29	03:48
90.6	90.4	84.4	83.7	90.7	89.9	84.5	83.7	92.3	91.4	86.0	85.7	87.3	87.2	88.8	87.78	-0.03	40.5	40.5	40.8	40.6	421.84	421.92	03:49
90.6	90.4	84.4	83.7	90.7	89.9	84.5	83.7	92.3	91.4	85.9	85.7	87.3	87.2	88.8	87.77	-0.03	40.5	40.6	40.8	40.6	422.48	422.76	03:50
90.6	90.4	84.4	83.7	90.7	89.9	84.5	83.7	92.3	91.4	85.9	85.7	87.3	87.2	88.8	87.78	-0.03	40.5	40.6	40.8	40.6	422.24	422.36	03:51
90.7	90.4	84.4	83.7	90.7	89.9	84.5	83.8	92.4	91.4	85.9	85.7	87.3	87.2	88.9	87.80	-0.03	40.4	40.6	40.8	40.6	422.64	422.59	03:52
90.7	90.4	84.4	83.7	90.7	89.9	84.5	83.7	92.3	91.4	85.9	85.7	87.3	87.2	88.8	87.79	-0.03	40.4	40.5	40.7	40.6	421.92	421.88	03:53
90.6	90.4	84.4	83.7	90.7	89.9	84.5	83.8	92.3	91.4	85.9	85.7	87.3	87.2	88.8	87.78	-0.03	40.5	40.6	40.7	40.6	421.76	421.85	03:54
90.6	90.4	84.4	83.7	90.7	89.9	84.5	83.7	92.3	91.4	86.0	85.7	87.3	87.2	88.8	87.76	-0.04	40.5	40.5	40.8	40.6	421.76	421.98	03:55
90.6	90.4	84.4	83.7	90.7	89.9	84.5	83.7	92.3	91.4	85.9	85.7	87.3	87.2	88.8	87.79	-0.04	40.5	40.6	40.8	40.6	422.24	422.41	03:56
90.6	90.4	84.4	83.7	90.7	89.9	84.5	83.7	92.3	91.4	85.9	85.7	87.3	87.2	88.8	87.77	-0.04	40.5	40.6	40.8	40.6	423.04	423.14	03:57
90.6	90.4	84.4	83.7	90.7	89.9	84.5	83.7	92.3	91.4	85.9	85.7	87.3	87.2	88.8	87.78	-0.04	40.4	40.6	40.8	40.6	421.60	421.73	03:58
90.6	90.4	84.4	83.7	90.7	89.9	84.5	83.7	92.3	91.4	85.9	85.7	87.3	87.2	88.8	87.76	-0.04	40.4	40.6	40.8	40.6	422.16	422.34	03:59
90.6	90.4	84.4	83.7	90.7	89.9	84.5	83.7	92.3	91.4	85.9	85.7	87.3	87.2	88.8	87.77	-0.04	40.5	40.6	40.8	40.6	422.00	422.14	04:00
90.6	90.4	84.4	83.7	90.7	89.9	84.5	83.7	92.3	91.4	85.9	85.7	87.3	87.2	88.8	87.78	-0.04	40.4	40.6	40.8	40.6	421.68	421.71	04:01
90.6	90.4	84.4	83.7	90.7	89.9	84.5	83.7	92.3	91.4	85.9	85.7	87.3	87.2	88.8	87.77	-0.05	40.4	40.5	40.8	40.6	420.88	420.92	04:02

COMMENTS

Tested By Frank A. Dewney Date 4-6-93 Reviewed By C L Rutledge Date 4-6-93

AMPACITY TEST. JOB NUMBER 93-0501. SAMPLE NUMBER 93-0501-03 DATA FILE 475003no.002 04-06-1993 F-8

POSITION 1				POSITION 2				POSITION 3				POSITION AVG			AVG		AMBIENT TEMPERATURE				AMPS		
Trd1	Twh1	Tgr1	Tbk1	Trd2	Twh2	Tgr2	Tbk2	Trd3	Twh3	Tgr3	Tbk3	Tav1	Tav2	Tav3	Twave	SLOPE	Tam1	Tam2	Tam3	Taav	It	I'	TIME
90.6	90.4	84.4	83.7	90.7	89.9	84.5	83.7	92.3	91.4	85.9	85.7	87.3	87.2	88.8	87.78	-0.04	40.5	40.5	40.7	40.6	421.04	421.11	04:03
90.6	90.4	84.4	83.7	90.7	89.9	84.5	83.7	92.3	91.4	85.9	85.7	87.3	87.2	88.8	87.77	-0.05	40.5	40.6	40.8	40.6	422.16	422.30	04:04
90.6	90.4	84.4	83.7	90.7	89.9	84.5	83.7	92.3	91.4	85.9	85.7	87.3	87.2	88.8	87.77	-0.05	40.4	40.6	40.8	40.6	422.32	422.44	04:05
90.6	90.4	84.4	83.7	90.7	89.9	84.5	83.7	92.3	91.4	86.0	85.7	87.3	87.2	88.9	87.78	-0.05	40.5	40.6	40.8	40.6	422.80	422.86	04:06
90.6	90.4	84.4	83.7	90.7	89.9	84.5	83.7	92.3	91.4	85.9	85.7	87.3	87.2	88.8	87.77	-0.04	40.5	40.6	40.8	40.6	423.36	423.44	04:07
90.6	90.4	84.4	83.7	90.7	89.9	84.5	83.7	92.3	91.4	85.9	85.7	87.3	87.2	88.8	87.77	-0.04	40.4	40.5	40.7	40.6	421.84	421.80	04:08
90.6	90.4	84.4	83.7	90.7	89.9	84.5	83.7	92.3	91.4	85.9	85.7	87.3	87.2	88.8	87.77	-0.05	40.4	40.5	40.8	40.6	422.80	422.91	04:09
90.6	90.4	84.4	83.7	90.7	89.9	84.5	83.7	92.3	91.4	86.0	85.7	87.3	87.2	88.8	87.78	-0.05	40.5	40.6	40.8	40.6	422.64	422.76	04:10
90.6	90.4	84.4	83.7	90.7	89.9	84.5	83.7	92.3	91.4	85.9	85.7	87.3	87.2	88.8	87.75	-0.05	40.4	40.6	40.8	40.6	422.72	422.86	04:11
90.6	90.4	84.4	83.7	90.7	89.9	84.5	83.7	92.3	91.4	85.9	85.7	87.3	87.2	88.8	87.77	-0.05	40.5	40.6	40.8	40.6	422.00	422.15	04:12
90.6	90.4	84.4	83.7	90.7	89.9	84.5	83.8	92.3	91.4	85.9	85.7	87.3	87.2	88.8	87.78	-0.04	40.4	40.6	40.8	40.6	421.84	421.88	04:13
90.6	90.4	84.4	83.7	90.7	89.9	84.5	83.7	92.3	91.4	85.9	85.7	87.3	87.2	88.8	87.77	-0.04	40.5	40.6	40.8	40.6	422.32	422.48	04:14
90.6	90.4	84.4	83.7	90.7	89.9	84.5	83.7	92.3	91.4	85.9	85.7	87.3	87.2	88.8	87.76	-0.04	40.5	40.6	40.8	40.6	422.00	422.23	04:15
90.6	90.4	84.4	83.7	90.7	89.9	84.5	83.7	92.3	91.4	86.0	85.7	87.3	87.2	88.9	87.78	-0.04	40.5	40.5	40.8	40.6	420.64	420.74	04:16
90.6	90.4	84.4	83.7	90.7	89.9	84.5	83.7	92.3	91.4	85.9	85.7	87.3	87.2	88.8	87.77	-0.04	40.4	40.6	40.8	40.6	421.68	421.74	04:17
90.6	90.4	84.4	83.7	90.7	89.9	84.5	83.7	92.3	91.4	85.9	85.7	87.3	87.2	88.8	87.75	-0.04	40.4	40.6	40.8	40.6	421.84	421.95	04:18
90.6	90.4	84.4	83.7	90.7	89.9	84.5	83.7	92.3	91.4	85.9	85.7	87.3	87.2	88.8	87.77	-0.04	40.5	40.6	40.7	40.6	421.92	421.95	04:19
90.6	90.4	84.4	83.7	90.7	89.9	84.5	83.7	92.3	91.4	85.9	85.7	87.3	87.2	88.8	87.76	-0.04	40.5	40.6	40.7	40.6	422.16	422.26	04:20
90.6	90.4	84.4	83.7	90.7	89.9	84.5	83.7	92.3	91.4	85.9	85.7	87.3	87.2	88.8	87.77	-0.03	40.4	40.6	40.7	40.6	422.32	422.38	04:21
90.6	90.4	84.4	83.7	90.7	89.9	84.5	83.7	92.3	91.4	85.9	85.7	87.3	87.2	88.8	87.77	-0.03	40.4	40.6	40.8	40.6	421.76	421.83	04:22
90.6	90.4	84.4	83.7	90.7	89.9	84.5	83.7	92.3	91.4	85.9	85.7	87.3	87.2	88.8	87.78	-0.03	40.5	40.6	40.8	40.6	422.00	422.14	04:23
90.6	90.4	84.4	83.7	90.7	89.9	84.5	83.7	92.3	91.4	85.9	85.7	87.3	87.2	88.8	87.77	-0.03	40.4	40.6	40.8	40.6	420.00	420.13	04:24
90.6	90.4	84.4	83.7	90.7	89.9	84.5	83.7	92.3	91.3	85.9	85.7	87.3	87.2	88.8	87.75	-0.03	40.4	40.5	40.8	40.6	421.76	421.87	04:25
90.6	90.4	84.4	83.7	90.7	89.9	84.5	83.7	92.3	91.4	85.9	85.7	87.3	87.2	88.8	87.76	-0.03	40.4	40.6	40.8	40.6	421.20	421.35	04:26
90.6	90.4	84.4	83.7	90.7	89.9	84.5	83.7	92.3	91.4	85.9	85.7	87.3	87.2	88.8	87.76	-0.03	40.4	40.6	40.8	40.6	421.92	422.01	04:27
90.6	90.4	84.4	83.7	90.7	89.9	84.5	83.7	92.3	91.4	85.9	85.7	87.3	87.2	88.8	87.77	-0.03	40.4	40.5	40.8	40.6	421.12	421.23	04:28
90.6	90.4	84.4	83.7	90.7	89.9	84.5	83.7	92.3	91.4	85.9	85.7	87.3	87.2	88.8	87.76	-0.03	40.5	40.5	40.7	40.6	420.64	420.68	04:29
90.6	90.4	84.4	83.7	90.7	89.9	84.5	83.7	92.3	91.4	85.9	85.7	87.3	87.2	88.8	87.76	-0.03	40.5	40.6	40.7	40.6	420.72	420.79	04:30
90.6	90.4	84.4	83.7	90.7	89.9	84.5	83.7	92.3	91.4	85.9	85.7	87.3	87.2	88.8	87.76	-0.03	40.4	40.5	40.8	40.6	420.80	420.91	04:31
90.6	90.4	84.4	83.7	90.7	89.9	84.5	83.7	92.3	91.4	85.9	85.7	87.3	87.2	88.8	87.76	-0.03	40.4	40.6	40.8	40.6	420.16	420.27	04:32
90.6	90.3	84.4	83.7	90.7	89.9	84.5	83.7	92.3	91.4	85.9	85.7	87.3	87.2	88.8	87.75	-0.03	40.4	40.5	40.8	40.6	420.56	420.64	04:33
90.6	90.4	84.4	83.7	90.6	89.9	84.5	83.7	92.3	91.3	85.9	85.6	87.2	87.2	88.8	87.74	-0.03	40.4	40.5	40.8	40.6	419.84	420.11	04:34
90.6	90.3	84.4	83.7	90.6	89.9	84.5	83.7	92.3	91.3	85.9	85.7	87.2	87.2	88.8	87.74	-0.03	40.4	40.5	40.8	40.6	421.52	421.72	04:35
90.6	90.4	84.4	83.7	90.6	89.9	84.5	83.7	92.3	91.4	85.9	85.7	87.3	87.2	88.8	87.75	-0.03	40.5	40.5	40.8	40.6	420.88	421.11	04:36
90.6	90.4	84.4	83.6	90.6	89.9	84.5	83.7	92.3	91.3	85.9	85.6	87.2	87.2	88.8	87.73	-0.03	40.4	40.5	40.8	40.6	421.28	421.49	04:37
90.6	90.3	84.4	83.7	90.6	89.9	84.5	83.7	92.3	91.3	85.9	85.7	87.2	87.2	88.8	87.74	-0.04	40.4	40.5	40.8	40.6	420.08	420.17	04:38
90.6	90.3	84.4	83.7	90.7	89.9	84.5	83.7	92.3	91.3	85.9	85.7	87.2	87.2	88.8	87.75	-0.04	40.4	40.5	40.7	40.6	420.48	420.54	04:39
90.6	90.4	84.4	83.7	90.7	89.9	84.5	83.7	92.3	91.4	85.9	85.7	87.3	87.2	88.8	87.75	-0.04	40.4	40.6	40.7	40.6	419.52	419.58	04:40
90.6	90.3	84.4	83.7	90.7	89.9	84.5	83.7	92.3	91.4	85.9	85.7	87.2	87.2	88.8	87.75	-0.04	40.4	40.5	40.7	40.6	419.68	419.76	04:41
90.6	90.4	84.4	83.7	90.7	89.9	84.5	83.7	92.3	91.3	85.9	85.7	87.3	87.2	88.8	87.75	-0.04	40.4	40.5	40.7	40.6	418.88	418.94	04:42
90.6	90.4	84.4	83.7	90.6	89.9	84.5	83.7	92.3	91.3	85.9	85.6	87.3	87.2	88.8	87.74	-0.04	40.4	40.5	40.7	40.6	419.36	419.50	04:43
90.6	90.3	84.4	83.7	90.7	89.9	84.5	83.7	92.3	91.3	85.9	85.7	87.2	87.2	88.8	87.74	-0.04	40.4	40.5	40.7	40.6	418.56	418.63	04:44
90.6	90.3	84.4	83.7	90.6	89.9	84.4	83.7	92.3	91.3	85.9	85.6	87.2	87.2	88.8	87.73	-0.04	40.4	40.5	40.8	40.6	418.80	419.00	04:45
90.6	90.4	84.4	83.7	90.6	89.9	84.5	83.7	92.3	91.3	85.9	85.7	87.2	87.2	88.8	87.74	-0.04	40.4	40.5	40.8	40.6	418.16	418.34	04:46
90.6	90.3	84.4	83.6	90.6	89.8	84.5	83.7	92.3	91.3	85.9	85.7	87.2	87.2	88.8	87.72	-0.05	40.4	40.5	40.7	40.6	416.96	417.02	04:47
90.6	90.3	84.4	83.7	90.6	89.8	84.4	83.7	92.3	91.3	85.9	85.7	87.2	87.2	88.8	87.73	-0.05	40.4	40.5	40.7	40.6	416.88	416.93	04:48
90.6	90.3	84.3	83.7	90.6	89.8	84.4	83.7	92.3	91.3	85.9	85.7	87.2	87.2	88.8	87.72	-0.05	40.4	40.5	40.7	40.5	418.72	418.76	04:49
90.5	90.3	84.3	83.6	90.6	89.8	84.4	83.7	92.3	91.3	85.9	85.7	87.2	87.1	88.8	87.71	-0.06	40.4	40.5	40.7	40.6	417.52	417.72	04:50
90.6	90.3	84.3	83.7	90.6	89.8	84.4	83.7	92.3	91.3	85.9	85.6	87.2	87.1	88.8	87.71	-0.06	40.4	40.5	40.8	40.6	418.88	419.12	04:51
90.5	90.3	84.3	83.6	90.6	89.8	84.4	83.7	92.2	91.3	85.8	85.6	87.2	87.1	88.7	87.68	-0.06	40.4	40.5	40.8	40.6	418.64	418.99	04:52
90.5	90.3	84.3	83.6	90.6	89.8	84.4	83.6	92.3	91.3	85.9	85.6	87.2	87.1	88.8	87.69	-0.06	40.5	40.5	40.7	40.6	419.28	419.60	04:53
90.5	90.3	84.3	83.6	90.6	89.8	84.4	83.6	92.2	91.3	85.8	85.6	87.2	87.1	88.7	87.67	-0.07	40.4	40.5	40.7	40.5	419.28	419.52	04:54
90.5	90.3	84.3	83.6	90.6	89.8	84.4	83.6	92.2	91.3	85.8	85.6	87.2	87.1	88.7	87.67	-0.08	40.4	40.5	40.7	40.5	418.48	418.72	04:55
90.5	90.3	84.3	83.6	90.6	89.8	84.4	83.6	92.2	91.3	85.8	85.6	87.2	87.1	88.7	87.68	-0.08	40.4	40.5	40.7	40.5	420.08	420.27	04:56
90.5	90.3	84.3	83.6	90.6	89.8	84.4	83.6	92.2	91.3	85.8	85.6	87.2	87.1	88.7	87.68	-0.09	40.4	40.5	40.7	40.5	421.36	421.58	04:57
90.5	90.3	84.3	83.6	90.6	89.8	84.4	83.7	92.2	91.3	85.8	85.6	87.2	87.1	88.7	87.68	-0.09	40.4	40.5	40.7	40.6	420.48	420.75	04:58
90.5	90.3	84.3	83.6	90.6	89.8	84.4	83.6	92.2	91.3	85.8	85.6	87.2	87.1	88.7	87.68	-0.09	40.4	40.5	40.7	40.6	420.16	420.52	04:59
90.5	90.3	84.3	83.6	90.6	89.8	84.4	83.6	92.2	91.3	85.8	85.6	87.2	87.1	88.7	87.67	-0.10	40.4	40.5	40.7	40.5	419.52	419.68	05:00
90.5	90.3	84.3	83.6	90.6	89.8	84.4	83.6	92.2	91.3	85.8	85.6	87.2	87.1	88.7	87.67	-0.10	40.4	40.5	40.7	40.5	420.32	420.53	05:01
90.5	90.3	84.3	83.6	90.6	89.8	84.4	83.6	92.3	91.3	85.9	85.6	87.2	87.1	88.8	87.68	-0.11	40.4	40.5	40.7	40.5	422.16	422.37	05:02

COMMENTS

Tested By Frank A. Deeney Date 4-6-93 Reviewed By C.L. Rutledge Date ~~4-7-93~~ 4-6-93 CLR 4-6-93

AMPACITY TEST. JOB NUMBER 93-0501. SAMPLE NUMBER 93-0501-03 DATA FILE 475003no.002 04-06-1993

POSITION 1				POSITION 2				POSITION 3				POSITION AVG			AVG		AMBIENT TEMPERATURE				AMPS		
Trd1	Twh1	Tgr1	Tbk1	Trd2	Twh2	Tgr2	Tbk2	Trd3	Twh3	Tgr3	Tbk3	Tav1	Tav2	Tav3	Twave	SLOPE	Tam1	Tam2	Tam3	Taav	It	I'	TIME
90.5	90.3	84.3	83.6	90.6	89.8	84.4	83.7	92.3	91.3	85.9	85.6	87.2	87.1	88.8	87.69	-0.11	40.4	40.5	40.7	40.5	421.68	421.87	05:03
90.5	90.3	84.3	83.6	90.6	89.8	84.4	83.7	92.3	91.3	85.9	85.6	87.2	87.1	88.8	87.69	-0.11	40.4	40.5	40.7	40.5	421.92	422.06	05:04
90.5	90.3	84.3	83.6	90.6	89.8	84.4	83.6	92.3	91.3	85.9	85.6	87.2	87.1	88.8	87.68	-0.11	40.4	40.5	40.7	40.5	422.32	422.49	05:05
90.5	90.3	84.3	83.6	90.6	89.8	84.4	83.7	92.2	91.3	85.9	85.7	87.2	87.1	88.8	87.69	-0.11	40.4	40.5	40.7	40.5	422.16	422.32	05:06
90.5	90.3	84.3	83.6	90.6	89.8	84.4	83.6	92.2	91.3	85.8	85.6	87.2	87.1	88.7	87.66	-0.12	40.4	40.5	40.7	40.5	422.24	422.58	05:07
90.5	90.3	84.3	83.6	90.6	89.8	84.4	83.7	92.3	91.3	85.9	85.6	87.2	87.1	88.8	87.69	-0.12	40.4	40.6	40.7	40.5	422.16	422.29	05:08
90.5	90.3	84.3	83.6	90.6	89.8	84.4	83.7	92.2	91.3	85.8	85.6	87.2	87.1	88.7	87.68	-0.12	40.5	40.6	40.7	40.6	424.96	425.35	05:09
90.5	90.3	84.3	83.6	90.6	89.8	84.4	83.6	92.3	91.3	85.9	85.6	87.2	87.1	88.8	87.68	-0.12	40.4	40.5	40.7	40.6	424.16	424.50	05:10
90.5	90.3	84.3	83.6	90.6	89.8	84.4	83.7	92.2	91.3	85.9	85.6	87.2	87.1	88.8	87.69	-0.12	40.4	40.5	40.8	40.6	423.36	423.72	05:11
90.5	90.3	84.3	83.6	90.6	89.8	84.4	83.7	92.2	91.3	85.8	85.6	87.2	87.1	88.8	87.70	-0.12	40.4	40.6	40.7	40.6	423.76	424.10	05:12
90.5	90.3	84.3	83.6	90.6	89.8	84.4	83.7	92.2	91.3	85.9	85.6	87.2	87.1	88.8	87.69	-0.11	40.4	40.5	40.7	40.5	423.68	423.81	05:13
90.5	90.3	84.3	83.6	90.6	89.8	84.4	83.7	92.2	91.3	85.8	85.6	87.2	87.1	88.7	87.68	-0.11	40.4	40.6	40.7	40.6	424.64	424.97	05:14
90.5	90.3	84.3	83.6	90.6	89.8	84.4	83.7	92.3	91.3	85.9	85.6	87.2	87.1	88.8	87.70	-0.11	40.4	40.6	40.7	40.6	425.20	425.49	05:15
90.6	90.3	84.3	83.6	90.6	89.8	84.4	83.7	92.3	91.3	85.9	85.6	87.2	87.1	88.8	87.71	-0.11	40.4	40.5	40.7	40.5	424.80	424.95	05:16
90.6	90.3	84.4	83.6	90.6	89.9	84.5	83.7	92.3	91.3	85.9	85.6	87.2	87.2	88.8	87.72	-0.10	40.4	40.6	40.7	40.6	424.80	425.01	05:17
90.6	90.3	84.3	83.6	90.6	89.8	84.4	83.7	92.3	91.3	85.9	85.6	87.2	87.1	88.8	87.70	-0.10	40.4	40.6	40.8	40.6	424.72	425.12	05:18
90.6	90.3	84.4	83.7	90.6	89.8	84.5	83.7	92.3	91.3	85.9	85.6	87.2	87.2	88.8	87.71	-0.10	40.5	40.6	40.7	40.6	423.68	424.08	05:19
90.6	90.3	84.3	83.6	90.6	89.9	84.5	83.7	92.3	91.3	85.8	85.6	87.2	87.2	88.8	87.71	-0.09	40.5	40.6	40.8	40.6	424.16	424.52	05:20
90.6	90.3	84.4	83.7	90.7	89.9	84.5	83.7	92.3	91.3	85.9	85.7	87.2	87.2	88.8	87.74	-0.09	40.5	40.6	40.7	40.6	422.72	422.90	05:21
90.6	90.3	84.4	83.7	90.6	89.9	84.5	83.7	92.3	91.3	85.9	85.7	87.2	87.2	88.8	87.73	-0.08	40.5	40.6	40.8	40.6	426.56	426.93	05:22
90.6	90.3	84.3	83.6	90.6	89.8	84.4	83.7	92.3	91.3	85.9	85.7	87.2	87.1	88.8	87.71	-0.07	40.5	40.6	40.8	40.6	425.44	425.79	05:23
90.6	90.3	84.4	83.7	90.6	89.8	84.5	83.7	92.3	91.3	85.9	85.7	87.2	87.2	88.8	87.73	-0.07	40.5	40.6	40.8	40.6	426.00	426.38	05:24
90.6	90.3	84.4	83.7	90.6	89.9	84.5	83.7	92.3	91.3	85.9	85.7	87.2	87.2	88.8	87.74	-0.06	40.5	40.6	40.8	40.6	424.96	425.36	05:25
90.6	90.3	84.4	83.7	90.6	89.9	84.5	83.7	92.3	91.3	85.9	85.7	87.2	87.2	88.8	87.75	-0.05	40.5	40.6	40.8	40.6	423.60	423.95	05:26
90.6	90.3	84.4	83.7	90.6	89.9	84.5	83.7	92.3	91.3	85.9	85.7	87.3	87.2	88.8	87.74	-0.05	40.5	40.6	40.8	40.6	424.00	424.40	05:27
90.6	90.4	84.4	83.7	90.7	89.9	84.5	83.7	92.3	91.4	85.9	85.7	87.2	87.2	88.8	87.75	-0.04	40.5	40.6	40.8	40.7	424.56	424.95	05:28
90.6	90.3	84.4	83.7	90.7	89.9	84.5	83.7	92.3	91.4	85.9	85.7	87.3	87.2	88.8	87.76	-0.03	40.5	40.6	40.8	40.6	423.92	424.24	05:29
90.6	90.4	84.4	83.7	90.7	89.9	84.5	83.7	92.3	91.4	86.0	85.7	87.3	87.2	88.8	87.77	-0.02	40.5	40.7	40.8	40.7	424.80	425.20	05:30
90.6	90.4	84.4	83.7	90.7	89.9	84.5	83.7	92.3	91.4	85.9	85.7	87.3	87.2	88.8	87.76	-0.01	40.5	40.6	40.8	40.6	424.32	424.63	05:31
90.6	90.3	84.4	83.7	90.7	89.9	84.5	83.7	92.3	91.4	85.9	85.7	87.3	87.2	88.8	87.76	0.00	40.5	40.6	40.8	40.6	424.80	425.10	05:32
90.6	90.4	84.4	83.7	90.6	89.9	84.5	83.7	92.3	91.4	85.9	85.6	87.3	87.2	88.8	87.74	0.01	40.5	40.6	40.8	40.6	423.84	424.24	05:33
90.6	90.4	84.4	83.7	90.7	89.9	84.5	83.8	92.3	91.4	85.9	85.7	87.3	87.2	88.8	87.75	0.01	40.5	40.6	40.8	40.6	423.92	424.17	05:34
90.6	90.3	84.4	83.7	90.7	89.9	84.5	83.7	92.3	91.4	86.0	85.7	87.3	87.2	88.8	87.77	0.02	40.5	40.6	40.8	40.6	423.92	424.20	05:35
90.6	90.3	84.4	83.7	90.7	89.9	84.5	83.7	92.3	91.4	86.0	85.7	87.3	87.2	88.8	87.77	0.03	40.5	40.6	40.9	40.6	424.16	424.55	05:36
90.6	90.4	84.4	83.7	90.7	89.9	84.5	83.8	92.4	91.4	86.0	85.7	87.3	87.2	88.9	87.79	0.04	40.5	40.6	40.8	40.7	422.88	423.26	05:37
90.6	90.3	84.4	83.7	90.7	89.9	84.5	83.7	92.3	91.4	86.0	85.7	87.3	87.2	88.8	87.76	0.05	40.5	40.6	40.8	40.6	424.48	424.82	05:38
90.6	90.4	84.4	83.7	90.7	89.9	84.5	83.8	92.3	91.4	85.9	85.7	87.3	87.2	88.8	87.76	0.05	40.5	40.6	40.8	40.7	425.76	426.13	05:39
90.6	90.4	84.4	83.7	90.7	89.9	84.5	83.8	92.3	91.4	85.9	85.7	87.3	87.2	88.8	87.77	0.06	40.5	40.6	40.8	40.6	425.84	426.17	05:40
90.6	90.4	84.4	83.7	90.7	89.9	84.5	83.7	92.3	91.4	85.9	85.7	87.3	87.2	88.8	87.76	0.07	40.5	40.6	40.8	40.7	425.52	425.94	05:41
90.6	90.4	84.4	83.7	90.7	89.9	84.5	83.7	92.3	91.4	86.0	85.7	87.3	87.2	88.9	87.79	0.08	40.5	40.6	40.8	40.6	424.80	425.02	05:42
90.6	90.4	84.4	83.7	90.7	89.9	84.5	83.8	92.3	91.4	85.9	85.7	87.3	87.2	88.8	87.78	0.09	40.5	40.6	40.8	40.6	425.44	425.76	05:43
90.6	90.4	84.4	83.7	90.7	89.9	84.5	83.8	92.4	91.4	86.0	85.7	87.3	87.2	88.9	87.79	0.10	40.5	40.6	40.8	40.7	426.48	426.80	05:44
90.6	90.4	84.4	83.7	90.7	89.9	84.6	83.8	92.4	91.4	85.9	85.7	87.3	87.2	88.9	87.80	0.11	40.5	40.6	40.8	40.6	425.76	425.89	05:45
90.6	90.4	84.4	83.7	90.7	89.9	84.6	83.8	92.4	91.4	86.0	85.7	87.3	87.2	88.9	87.80	0.11	40.5	40.6	40.8	40.6	426.16	426.41	05:46
90.6	90.4	84.4	83.7	90.7	89.9	84.6	83.8	92.4	91.4	86.0	85.7	87.3	87.2	88.9	87.80	0.12	40.6	40.7	40.8	40.7	424.32	424.74	05:47
90.7	90.4	84.4	83.7	90.7	89.9	84.6	83.8	92.4	91.4	86.0	85.7	87.3	87.2	88.9	87.81	0.13	40.6	40.6	40.8	40.7	425.92	426.25	05:48
90.6	90.4	84.4	83.8	90.7	89.9	84.5	83.8	92.4	91.4	86.0	85.7	87.3	87.2	88.9	87.81	0.14	40.5	40.7	40.8	40.7	424.56	424.83	05:49
90.7	90.4	84.4	83.8	90.7	89.9	84.6	83.8	92.4	91.4	86.0	85.7	87.3	87.3	88.9	87.82	0.15	40.5	40.6	40.8	40.7	425.28	425.50	05:50
90.7	90.5	84.4	83.8	90.7	90.0	84.6	83.8	92.4	91.4	86.0	85.7	87.3	87.3	88.9	87.83	0.15	40.6	40.6	40.8	40.7	424.08	424.34	05:51
90.7	90.4	84.4	83.8	90.8	90.0	84.6	83.8	92.4	91.4	86.0	85.8	87.3	87.3	88.9	87.83	0.16	40.5	40.6	40.8	40.7	424.32	424.41	05:52
90.7	90.4	84.4	83.7	90.7	90.0	84.6	83.8	92.4	91.4	86.0	85.7	87.3	87.3	88.9	87.82	0.16	40.5	40.7	40.9	40.7	424.08	424.51	05:53
90.7	90.4	84.4	83.8	90.7	90.0	84.6	83.8	92.4	91.4	86.0	85.7	87.3	87.3	88.9	87.82	0.17	40.5	40.6	40.8	40.7	424.08	424.31	05:54
90.7	90.4	84.4	83.8	90.8	90.0	84.6	83.8	92.4	91.4	86.0	85.8	87.3	87.3	88.9	87.84	0.17	40.5	40.7	40.8	40.7	424.48	424.67	05:55
90.7	90.4	84.5	83.8	90.7	90.0	84.6	83.8	92.4	91.4	86.0	85.7	87.3	87.3	88.9	87.83	0.17	40.5	40.6	40.8	40.7	423.84	424.02	05:56
90.7	90.4	84.4	83.8	90.7	90.0	84.6	83.8	92.4	91.4	86.0	85.7	87.3	87.3	88.9	87.83	0.18	40.5	40.7	40.9	40.7	423.60	423.96	05:57
90.7	90.5	84.4	83.8	90.7	90.0	84.6	83.8	92.4	91.4	86.0	85.7	87.3	87.3	88.9	87.83	0.18	40.5	40.6	40.8	40.7	424.56	424.81	05:58
90.7	90.4	84.4	83.7	90.7	90.0	84.6	83.8	92.4	91.4	86.0	85.7	87.3	87.3	88.9	87.82	0.18	40.5	40.7	40.9	40.7	424.16	424.52	05:59
90.7	90.5	84.4	83.7	90.7	90.0	84.6	83.8	92.4	91.4	85.9	85.8	87.3	87.3	88.9	87.83	0.18	40.5	40.6	40.9	40.7	423.68	423.82	06:00
90.7	90.4	84.5	83.8	90.8	90.0	84.6	83.8	92.4	91.4	86.0	85.8	87.3	87.3	88.9	87.84	0.18	40.5	40.6	40.8	40.6	422.48	422.53	06:01
90.7	90.4	84.5	83.7	90.7	90.0	84.6	83.8	92.4	91.4	86.0	85.7	87.3	87.3	88.9	87.83	0.18	40.6	40.6	40.8	40.7	422.16	422.33	06:02

COMMENTS

Tested By Frank A. Deiney Date 4-6-93 Reviewed By C L Rutledge Date 4-6-93

AMPACITY TEST. JOB NUMBER 93-0501. SAMPLE NUMBER 93-0501-04 DATA FILE 475004no.001 04-02-1993 F-10

POSITION 1				POSITION 2				POSITION 3				POSITION AVG			AVG		AMBIENT TEMPERATURE				AMPS		
Trd1	Twh1	Tgr1	Tbk1	Trd2	Twh2	Tgr2	Tbk2	Trd3	Twh3	Tgr3	Tbk3	Tav1	Tav2	Tav3	Twave	SLOPE	Tam1	Tam2	Tam3	Taav	It	I'	TIME
89.2	91.9	86.3	85.7	88.3	90.5	85.1	84.1	86.8	89.5	84.6	84.6	88.3	87.0	86.4	87.22	0.07	41.0	41.0	41.0	41.0	420.56	423.11	04:21
89.3	91.9	86.3	85.7	88.3	90.5	85.1	84.1	86.8	89.5	84.6	84.6	88.3	87.0	86.4	87.23	0.07	41.0	41.0	41.0	41.0	421.04	423.51	04:22
89.3	91.9	86.3	85.8	88.3	90.5	85.1	84.1	86.9	89.5	84.6	84.6	88.3	87.0	86.4	87.24	0.07	40.9	41.0	40.9	40.9	421.68	423.91	04:23
89.3	91.9	86.3	85.7	88.3	90.5	85.1	84.1	86.8	89.5	84.6	84.6	88.3	87.0	86.4	87.23	0.07	41.0	41.0	41.0	41.0	421.84	424.44	04:24
89.3	91.9	86.3	85.7	88.3	90.5	85.1	84.1	86.8	89.5	84.6	84.6	88.3	87.0	86.4	87.23	0.07	40.9	41.0	41.0	41.0	421.52	423.95	04:25
89.3	91.9	86.3	85.7	88.3	90.5	85.1	84.1	86.8	89.5	84.6	84.6	88.3	87.0	86.4	87.23	0.07	41.0	41.0	40.9	40.9	421.20	423.51	04:26
89.2	91.9	86.3	85.7	88.3	90.5	85.1	84.1	86.8	89.5	84.6	84.6	88.3	87.0	86.4	87.23	0.07	40.9	41.0	40.9	40.9	421.04	423.38	04:27
89.2	91.9	86.3	85.7	88.3	90.5	85.1	84.1	86.8	89.5	84.6	84.6	88.3	87.0	86.4	87.22	0.06	41.0	41.0	40.9	40.9	420.40	422.73	04:28
89.3	91.9	86.3	85.8	88.3	90.5	85.1	84.1	86.8	89.5	84.6	84.6	88.3	87.0	86.4	87.23	0.06	41.0	41.0	41.0	41.0	420.88	423.37	04:29
89.3	91.9	86.3	85.7	88.3	90.5	85.1	84.1	86.8	89.5	84.6	84.6	88.3	87.0	86.4	87.23	0.06	40.9	41.0	40.9	40.9	420.96	423.31	04:30
89.3	91.9	86.3	85.7	88.3	90.5	85.1	84.1	86.8	89.5	84.6	84.6	88.3	87.0	86.4	87.23	0.06	41.0	41.0	40.9	41.0	420.08	422.62	04:31
89.3	91.9	86.3	85.7	88.3	90.5	85.1	84.1	86.8	89.5	84.6	84.6	88.3	87.0	86.4	87.24	0.06	40.9	41.0	40.9	41.0	420.32	422.74	04:32
89.3	91.9	86.3	85.7	88.3	90.5	85.1	84.1	86.8	89.5	84.6	84.6	88.3	87.0	86.4	87.24	0.06	41.0	41.0	41.0	41.0	419.44	421.81	04:33
89.3	91.9	86.3	85.7	88.3	90.5	85.1	84.1	86.8	89.5	84.6	84.6	88.3	87.0	86.4	87.23	0.06	40.9	41.0	41.0	41.0	420.08	422.47	04:34
89.3	91.9	86.3	85.8	88.3	90.5	85.1	84.1	86.9	89.5	84.6	84.6	88.3	87.0	86.4	87.23	0.05	41.0	40.9	40.9	40.9	420.80	423.11	04:35
89.3	91.9	86.3	85.8	88.3	90.5	85.1	84.2	86.8	89.5	84.6	84.6	88.3	87.0	86.4	87.25	0.05	41.0	41.0	41.0	41.0	420.32	422.79	04:36
89.3	91.9	86.3	85.8	88.3	90.5	85.1	84.1	86.9	89.5	84.6	84.6	88.3	87.0	86.4	87.25	0.06	41.0	41.0	41.0	41.0	420.08	422.51	04:37
89.3	91.9	86.3	85.8	88.3	90.5	85.1	84.2	86.8	89.5	84.6	84.7	88.3	87.0	86.4	87.24	0.06	41.0	41.0	41.0	41.0	420.08	422.54	04:38
89.3	91.9	86.3	85.7	88.3	90.5	85.1	84.1	86.8	89.5	84.6	84.6	88.3	87.0	86.4	87.23	0.05	41.0	41.0	41.0	41.0	420.40	422.86	04:39
89.3	91.9	86.3	85.8	88.3	90.5	85.1	84.2	86.9	89.5	84.6	84.7	88.3	87.0	86.4	87.26	0.06	41.0	41.0	41.0	41.0	420.88	423.30	04:40
89.3	91.9	86.3	85.8	88.3	90.5	85.1	84.1	86.9	89.5	84.6	84.7	88.3	87.0	86.4	87.25	0.06	41.0	40.9	41.0	41.0	419.68	422.09	04:41
89.3	91.9	86.3	85.8	88.3	90.5	85.1	84.2	86.9	89.5	84.6	84.7	88.3	87.0	86.4	87.26	0.06	41.0	40.9	41.0	41.0	420.80	423.08	04:42
89.3	91.9	86.3	85.8	88.3	90.5	85.1	84.1	86.9	89.5	84.6	84.7	88.3	87.0	86.4	87.25	0.06	41.0	41.0	41.0	41.0	419.60	422.09	04:43
89.3	91.9	86.3	85.8	88.3	90.5	85.1	84.2	86.9	89.5	84.6	84.7	88.3	87.0	86.4	87.25	0.06	41.0	41.1	41.0	41.0	420.32	422.83	04:44
89.3	91.9	86.3	85.8	88.3	90.5	85.1	84.1	86.9	89.5	84.7	84.7	88.3	87.0	86.4	87.24	0.05	40.9	41.1	40.9	41.0	419.60	421.98	04:45
89.3	91.9	86.3	85.8	88.3	90.5	85.1	84.2	86.9	89.5	84.6	84.7	88.3	87.0	86.4	87.26	0.05	40.9	41.0	41.1	41.0	420.00	422.47	04:46
89.3	91.9	86.3	85.8	88.3	90.5	85.1	84.1	86.9	89.5	84.6	84.7	88.3	87.0	86.4	87.25	0.05	41.0	40.9	41.0	41.0	419.68	422.13	04:47
89.3	91.9	86.3	85.7	88.3	90.5	85.1	84.2	86.8	89.5	84.6	84.7	88.3	87.0	86.4	87.23	0.05	41.0	41.0	41.0	41.0	419.76	422.33	04:48
89.3	91.9	86.3	85.8	88.3	90.5	85.1	84.1	86.8	89.5	84.6	84.7	88.3	87.0	86.4	87.24	0.05	41.0	41.0	41.1	41.0	419.36	422.06	04:49
89.3	91.9	86.3	85.8	88.3	90.5	85.1	84.1	86.9	89.5	84.6	84.7	88.3	87.0	86.4	87.24	0.05	40.9	41.0	41.0	41.0	420.24	422.68	04:50
89.3	91.9	86.3	85.8	88.3	90.5	85.1	84.1	86.9	89.5	84.6	84.7	88.3	87.0	86.4	87.24	0.05	41.0	41.0	41.1	41.0	420.08	422.66	04:51
89.3	91.9	86.3	85.8	88.3	90.5	85.1	84.1	86.9	89.5	84.6	84.7	88.3	87.0	86.4	87.25	0.05	41.0	41.0	41.0	41.0	420.08	422.63	04:52
89.3	91.9	86.3	85.8	88.3	90.5	85.1	84.2	86.9	89.5	84.6	84.7	88.3	87.0	86.4	87.26	0.05	41.0	41.0	41.0	41.0	419.60	422.08	04:53
89.3	91.9	86.3	85.8	88.3	90.5	85.1	84.2	86.9	89.5	84.7	84.7	88.3	87.0	86.4	87.25	0.05	41.0	40.9	41.1	41.0	419.60	422.20	04:54
89.3	91.9	86.3	85.8	88.3	90.5	85.1	84.2	86.9	89.5	84.6	84.7	88.3	87.0	86.4	87.25	0.04	41.0	41.0	41.0	41.0	420.08	422.61	04:55
89.3	91.9	86.3	85.8	88.3	90.5	85.1	84.1	86.9	89.5	84.6	84.7	88.3	87.0	86.4	87.25	0.05	41.0	41.0	41.0	41.0	420.08	422.62	04:56
89.3	91.9	86.3	85.8	88.3	90.5	85.1	84.2	86.9	89.5	84.6	84.7	88.3	87.0	86.4	87.25	0.05	41.0	41.0	41.0	41.0	419.92	422.41	04:57
89.3	91.9	86.3	85.8	88.3	90.5	85.1	84.2	86.9	89.5	84.6	84.7	88.3	87.0	86.4	87.25	0.05	40.9	41.0	41.0	41.0	419.44	421.95	04:58
89.3	91.9	86.3	85.7	88.3	90.5	85.1	84.1	86.8	89.5	84.6	84.7	88.3	87.0	86.4	87.24	0.04	41.0	41.0	41.0	41.0	418.32	420.87	04:59
89.3	91.9	86.3	85.8	88.3	90.5	85.1	84.1	86.9	89.5	84.6	84.7	88.3	87.0	86.4	87.24	0.04	41.0	41.0	40.9	41.0	420.08	422.46	05:00
89.3	91.9	86.3	85.8	88.3	90.5	85.1	84.2	86.9	89.5	84.6	84.7	88.3	87.0	86.4	87.24	0.04	41.0	41.0	41.0	41.0	420.56	423.06	05:01
89.3	91.9	86.3	85.8	88.3	90.5	85.1	84.2	86.9	89.5	84.6	84.7	88.3	87.0	86.4	87.26	0.05	41.0	41.0	40.9	40.9	420.08	422.32	05:02
89.3	91.9	86.3	85.8	88.3	90.5	85.1	84.2	86.9	89.5	84.6	84.7	88.3	87.0	86.4	87.25	0.04	41.0	41.0	41.0	41.0	419.92	422.45	05:03
89.3	91.9	86.3	85.8	88.3	90.5	85.1	84.2	86.9	89.5	84.6	84.7	88.3	87.0	86.4	87.26	0.04	41.0	41.0	41.0	41.0	418.96	421.37	05:04
89.3	91.9	86.3	85.8	88.3	90.5	85.1	84.2	86.9	89.5	84.6	84.7	88.3	87.0	86.4	87.27	0.05	40.9	41.0	41.1	41.0	420.08	422.48	05:05
89.3	91.9	86.3	85.8	88.3	90.5	85.1	84.2	86.9	89.5	84.6	84.7	88.3	87.0	86.4	87.26	0.05	40.9	41.0	41.0	41.0	419.76	422.15	05:06
89.3	91.9	86.3	85.8	88.3	90.5	85.1	84.2	86.9	89.5	84.6	84.7	88.3	87.0	86.4	87.26	0.05	41.0	41.0	41.0	41.0	418.96	421.39	05:07
89.3	91.9	86.3	85.8	88.3	90.5	85.1	84.2	86.9	89.5	84.6	84.7	88.3	87.0	86.4	87.26	0.04	41.0	41.0	41.0	41.0	420.00	422.37	05:08
89.3	91.9	86.3	85.8	88.3	90.5	85.1	84.1	86.9	89.5	84.6	84.7	88.3	87.0	86.4	87.24	0.04	41.0	41.0	41.0	41.0	419.52	422.05	05:09
89.3	91.9	86.3	85.8	88.3	90.5	85.1	84.2	86.9	89.5	84.6	84.7	88.3	87.0	86.4	87.24	0.04	41.0	41.0	40.9	41.0	420.40	422.77	05:10
89.3	91.9	86.3	85.8	88.3	90.5	85.1	84.2	86.9	89.5	84.6	84.7	88.3	87.0	86.4	87.24	0.04	40.9	41.0	41.0	41.0	419.28	421.75	05:11
89.3	91.9	86.3	85.8	88.3	90.5	85.1	84.1	86.9	89.5	84.6	84.7	88.3	87.0	86.4	87.24	0.04	40.9	41.0	41.0	41.0	418.56	420.89	05:12
89.3	91.9	86.3	85.8	88.3	90.5	85.1	84.1	86.9	89.5	84.6	84.7	88.3	87.0	86.4	87.24	0.03	41.0	41.0	41.1	41.0	418.32	420.97	05:13
89.3	91.9	86.3	85.7	88.3	90.4	85.1	84.1	86.9	89.5	84.6	84.7	88.3	87.0	86.4	87.23	0.03	41.0	40.9	41.1	41.0	418.56	421.20	05:14
89.3	91.9	86.3	85.7	88.3	90.5	85.1	84.1	86.8	89.5	84.6	84.7	88.3	87.0	86.4	87.23	0.02	41.0	41.0	41.1	41.0	419.44	422.15	05:15
89.3	91.9	86.3	85.8	88.3	90.5	85.1	84.1	86.9	89.5	84.6	84.7	88.3	87.0	86.4	87.24	0.02	41.0	41.0	41.0	41.0	419.92	422.46	05:16
89.3	91.9	86.3	85.7	88.3	90.5	85.1	84.1	86.9	89.5	84.6	84.7	88.3	87.0	86.4	87.23	0.02	40.9	41.0	41.0	41.0	421.20	423.69	05:17
89.3	91.9	86.3	85.8	88.3	90.5	85.1	84.1	86.9	89.5	84.6	84.7	88.3	87.0	86.4	87.23	0.02	41.0	41.0	41.0	41.0	421.12	423.66	05:18
89.3	91.9	86.3	85.8	88.3	90.5	85.1	84.1	86.9	89.5	84.6	84.7	88.3	87.0	86.4	87.24	0.01	41.0	40.9	41.1	41.0	421.44	424.05	05:19
89.3	91.9	86.3	85.8	88.3	90.5	85.1	84.1	86.9	89.5	84.6	84.7	88.3	87.0	86.4	87.25	0.01	41.0	40.9	41.1	41.0	420.40	422.90	05:20

COMMENTS _____

Tested By Frank A. Deeney Date 4-6-93 Reviewed By C L Rutledge Date 4-6-93

AMPACITY TEST. JOB NUMBER 93-0501. SAMPLE NUMBER 93-0501-04 DATA FILE 475004no.001 04-02-1993 F-1

POSITION 1				POSITION 2				POSITION 3				POSITION AVG			AVG		AMBIENT TEMPERATURE				AMPS		
Trd1	Twh1	Tgr1	Tbk1	Trd2	Twh2	Tgr2	Tbk2	Trd3	Twh3	Tgr3	Tbk3	Tav1	Tav2	Tav3	Twave	SLOPE	Tam1	Tam2	Tam3	Taav	It	I'	TIME
89.3	91.9	86.3	85.8	88.3	90.5	85.1	84.1	86.9	89.5	84.6	84.7	88.3	87.0	86.4	87.24	0.01	41.0	40.9	41.1	41.0	421.52	424.05	05:21
89.3	91.9	86.3	85.8	88.3	90.4	85.1	84.1	86.9	89.5	84.6	84.7	88.3	87.0	86.4	87.23	0.01	41.0	41.0	41.0	41.0	420.32	422.96	05:22
89.3	91.9	86.3	85.8	88.3	90.5	85.1	84.2	86.9	89.5	84.6	84.7	88.3	87.0	86.4	87.25	0.01	41.0	41.0	41.0	41.0	420.24	422.74	05:23
89.3	91.9	86.3	85.8	88.3	90.5	85.1	84.2	86.9	89.5	84.6	84.7	88.3	87.0	86.4	87.25	0.01	41.0	41.0	41.1	41.0	420.08	422.68	05:24
89.3	91.9	86.3	85.8	88.3	90.5	85.1	84.1	86.9	89.5	84.6	84.7	88.3	87.0	86.4	87.24	0.01	41.0	41.0	41.0	41.0	420.72	423.37	05:25
89.3	91.9	86.3	85.8	88.3	90.5	85.1	84.2	86.9	89.5	84.6	84.7	88.3	87.0	86.4	87.25	0.01	41.0	41.0	41.0	41.0	420.40	423.09	05:26
89.3	91.9	86.3	85.8	88.3	90.5	85.1	84.2	86.9	89.5	84.6	84.7	88.3	87.0	86.4	87.25	0.01	41.0	41.0	41.0	41.0	420.96	423.59	05:27
89.3	91.9	86.3	85.8	88.3	90.5	85.1	84.2	86.9	89.5	84.6	84.7	88.3	87.0	86.4	87.25	0.00	41.0	41.0	41.0	41.0	420.08	422.61	05:28
89.3	91.9	86.3	85.8	88.3	90.5	85.1	84.2	86.9	89.5	84.6	84.7	88.3	87.0	86.4	87.26	0.00	41.0	41.0	41.0	41.0	420.48	422.94	05:29
89.3	91.9	86.3	85.8	88.3	90.5	85.1	84.2	86.9	89.5	84.6	84.7	88.3	87.0	86.4	87.25	0.00	41.0	41.0	41.0	41.0	418.88	421.39	05:30
89.3	92.0	86.3	85.8	88.3	90.5	85.1	84.2	86.9	89.5	84.6	84.7	88.3	87.0	86.4	87.27	0.00	41.0	41.0	41.0	41.0	419.12	421.57	05:31
89.3	91.9	86.3	85.8	88.3	90.5	85.1	84.2	86.9	89.5	84.6	84.7	88.3	87.0	86.4	87.25	0.00	41.0	41.0	41.1	41.0	419.84	422.62	05:32
89.3	92.0	86.3	85.8	88.3	90.5	85.1	84.2	86.9	89.5	84.6	84.7	88.3	87.0	86.4	87.26	0.00	41.0	41.1	41.1	41.1	420.08	422.84	05:33
89.3	91.9	86.3	85.8	88.3	90.5	85.1	84.1	86.9	89.5	84.6	84.7	88.3	87.0	86.4	87.25	0.00	41.0	41.1	41.0	41.0	419.68	422.26	05:34
89.3	91.9	86.3	85.8	88.3	90.5	85.1	84.2	86.9	89.5	84.6	84.7	88.3	87.0	86.4	87.26	0.00	41.0	41.0	40.9	41.0	419.52	421.82	05:35
89.3	91.9	86.3	85.8	88.3	90.5	85.1	84.2	86.9	89.5	84.6	84.7	88.3	87.0	86.4	87.25	0.00	41.0	41.0	41.0	41.0	419.44	422.08	05:36
89.3	91.9	86.3	85.8	88.3	90.5	85.1	84.1	86.9	89.5	84.6	84.7	88.3	87.0	86.4	87.25	0.00	41.0	41.0	41.1	41.1	420.00	422.81	05:37
89.3	91.9	86.3	85.8	88.3	90.5	85.1	84.2	86.9	89.5	84.6	84.7	88.3	87.0	86.4	87.25	0.00	41.1	41.0	41.0	41.0	419.92	422.54	05:38
89.3	91.9	86.3	85.8	88.3	90.5	85.1	84.1	86.9	89.5	84.6	84.7	88.3	87.0	86.4	87.24	0.00	41.0	41.1	41.0	41.1	419.92	422.73	05:39
89.3	91.9	86.3	85.8	88.3	90.5	85.1	84.2	86.9	89.5	84.6	84.7	88.3	87.0	86.4	87.25	0.00	41.0	41.1	41.0	41.0	419.92	422.67	05:40
89.3	91.9	86.3	85.8	88.3	90.5	85.1	84.2	86.9	89.5	84.6	84.7	88.3	87.0	86.4	87.26	0.00	41.0	41.0	41.1	41.0	419.04	421.65	05:41
89.3	91.9	86.3	85.8	88.3	90.5	85.1	84.2	86.9	89.5	84.6	84.7	88.3	87.0	86.4	87.26	0.01	41.0	41.0	41.0	41.0	419.76	422.13	05:42
89.3	91.9	86.3	85.8	88.3	90.5	85.1	84.2	86.9	89.5	84.6	84.7	88.3	87.0	86.4	87.25	0.01	41.0	41.0	41.0	41.0	419.44	421.89	05:43
89.3	91.9	86.3	85.8	88.3	90.5	85.1	84.2	86.9	89.5	84.6	84.7	88.3	87.0	86.4	87.25	0.01	41.0	41.0	41.1	41.0	418.16	420.85	05:44
89.3	91.9	86.3	85.8	88.3	90.5	85.1	84.2	86.9	89.5	84.6	84.7	88.3	87.0	86.4	87.25	0.01	41.1	41.0	41.1	41.0	417.68	420.34	05:45
89.3	91.9	86.3	85.8	88.3	90.5	85.1	84.2	86.9	89.5	84.6	84.7	88.3	87.0	86.4	87.24	0.01	41.0	41.0	41.0	41.0	416.80	419.38	05:46
89.3	91.9	86.3	85.8	88.3	90.5	85.1	84.2	86.9	89.5	84.6	84.7	88.3	87.0	86.4	87.24	0.00	41.1	41.0	41.0	41.0	419.76	422.40	05:47
89.3	91.9	86.3	85.8	88.3	90.5	85.1	84.2	86.9	89.5	84.6	84.7	88.3	87.0	86.4	87.24	0.00	41.0	41.0	40.9	41.0	419.28	421.79	05:48
89.3	91.9	86.3	85.8	88.3	90.5	85.1	84.2	86.9	89.5	84.6	84.7	88.3	87.0	86.4	87.25	0.00	41.0	41.0	41.0	41.0	418.64	421.32	05:49
89.3	91.9	86.3	85.8	88.3	90.4	85.1	84.1	86.9	89.5	84.6	84.7	88.3	87.0	86.4	87.23	0.00	41.0	41.0	41.0	41.0	418.32	420.91	05:50
89.3	91.9	86.3	85.8	88.3	90.4	85.1	84.1	86.9	89.5	84.6	84.7	88.3	87.0	86.4	87.23	-0.00	41.0	41.0	41.1	41.0	417.04	419.81	05:51
89.3	91.9	86.3	85.8	88.3	90.4	85.1	84.2	86.9	89.5	84.6	84.7	88.3	87.0	86.4	87.23	-0.00	41.0	41.1	41.0	41.0	419.12	421.76	05:52
89.3	91.9	86.3	85.8	88.3	90.5	85.1	84.1	86.9	89.5	84.6	84.7	88.3	87.0	86.4	87.23	-0.00	41.0	41.1	41.0	41.0	419.60	422.31	05:53
89.3	91.9	86.3	85.7	88.3	90.4	85.1	84.2	86.9	89.5	84.6	84.7	88.3	87.0	86.4	87.23	-0.01	41.1	41.0	41.0	41.0	419.44	422.07	05:54
89.3	91.9	86.3	85.8	88.3	90.5	85.1	84.1	86.9	89.5	84.6	84.7	88.3	87.0	86.4	87.24	-0.01	41.0	41.0	41.0	41.0	420.00	422.61	05:55
89.3	91.9	86.3	85.7	88.3	90.4	85.1	84.1	86.9	89.5	84.6	84.6	88.3	87.0	86.4	87.23	-0.01	41.0	41.0	41.0	41.0	419.44	421.93	05:56
89.3	91.9	86.3	85.8	88.3	90.4	85.1	84.1	86.9	89.5	84.6	84.7	88.3	87.0	86.4	87.24	-0.01	41.0	41.0	41.1	41.0	419.68	422.39	05:57
89.3	91.9	86.3	85.8	88.3	90.5	85.1	84.2	86.9	89.5	84.6	84.7	88.3	87.0	86.4	87.25	-0.01	41.0	41.0	41.1	41.0	420.00	422.61	05:58
89.3	91.9	86.3	85.8	88.3	90.5	85.1	84.2	86.9	89.5	84.6	84.7	88.3	87.0	86.4	87.25	-0.01	41.0	41.0	41.1	41.0	419.92	422.53	05:59
89.3	91.9	86.3	85.7	88.3	90.4	85.1	84.1	86.9	89.5	84.6	84.7	88.3	87.0	86.4	87.23	-0.01	41.0	41.0	41.0	41.0	421.36	423.98	06:00
89.3	91.9	86.3	85.8	88.3	90.5	85.1	84.1	86.9	89.5	84.6	84.7	88.3	87.0	86.4	87.25	-0.01	41.0	41.0	41.0	41.0	419.92	422.40	06:01
89.3	91.9	86.3	85.8	88.3	90.5	85.1	84.1	86.9	89.5	84.6	84.7	88.3	87.0	86.4	87.24	-0.01	41.0	41.0	40.9	41.0	419.92	422.33	06:02
89.3	91.9	86.3	85.8	88.3	90.5	85.1	84.2	86.9	89.5	84.6	84.7	88.3	87.0	86.4	87.25	-0.01	41.0	41.0	41.0	41.0	421.44	423.88	06:03
89.3	91.9	86.3	85.8	88.3	90.5	85.1	84.1	86.9	89.5	84.6	84.7	88.3	87.0	86.4	87.24	-0.01	41.0	41.0	41.1	41.0	421.92	424.54	06:04
89.3	91.9	86.3	85.8	88.3	90.5	85.1	84.2	86.9	89.5	84.6	84.7	88.3	87.0	86.4	87.25	-0.00	41.0	41.1	41.1	41.0	421.36	424.10	06:05
89.3	91.9	86.3	85.8	88.3	90.5	85.1	84.2	86.9	89.5	84.6	84.7	88.3	87.0	86.4	87.26	-0.00	41.0	41.1	41.1	41.0	421.20	423.92	06:06
89.3	91.9	86.3	85.8	88.3	90.5	85.1	84.2	86.9	89.5	84.6	84.7	88.3	87.0	86.4	87.26	0.00	41.1	41.1	41.0	41.1	420.88	423.64	06:07
89.3	91.9	86.3	85.8	88.3	90.5	85.1	84.2	86.9	89.5	84.7	84.7	88.3	87.0	86.5	87.27	0.01	41.0	41.1	41.0	41.0	421.44	424.05	06:08
89.3	91.9	86.3	85.8	88.3	90.5	85.1	84.2	86.9	89.5	84.6	84.7	88.3	87.0	86.4	87.25	0.00	41.0	41.1	41.0	41.0	420.80	423.50	06:09
89.3	91.9	86.3	85.8	88.3	90.5	85.1	84.2	86.9	89.5	84.6	84.7	88.3	87.0	86.4	87.26	0.01	41.0	41.0	41.0	41.0	419.68	422.22	06:10
89.3	91.9	86.3	85.8	88.3	90.5	85.1	84.2	86.9	89.5	84.7	84.7	88.3	87.0	86.4	87.27	0.01	41.0	41.0	41.0	41.0	419.76	422.19	06:11
89.3	91.9	86.3	85.8	88.3	90.5	85.1	84.2	86.9	89.5	84.6	84.7	88.3	87.0	86.4	87.26	0.01	41.0	41.0	41.1	41.1	419.20	421.96	06:12
89.3	91.9	86.3	85.8	88.3	90.5	85.1	84.2	86.9	89.6	84.6	84.7	88.3	87.0	86.4	87.27	0.01	41.0	41.0	41.0	41.0	419.60	422.17	06:13
89.3	91.9	86.3	85.8	88.3	90.5	85.1	84.1	86.9	89.5	84.6	84.7	88.3	87.0	86.4	87.25	0.01	41.0	41.0	41.0	41.0	420.24	422.98	06:14
89.3	91.9	86.3	85.8	88.3	90.5	85.1	84.2	86.9	89.5	84.6	84.7	88.3	87.0	86.4	87.24	0.01	41.0	41.1	41.0	41.0	420.08	422.87	06:15
89.3	91.9	86.3	85.8	88.3	90.5	85.1	84.1	86.9	89.5	84.6	84.7	88.3	87.0	86.4	87.24	0.01	41.0	41.0	41.0	41.0	419.92	422.56	06:16
89.3	91.9	86.3	85.8	88.3	90.4	85.1	84.2	86.9	89.5	84.6	84.7	88.3	87.0	86.4	87.24	0.00	41.0	41.0	41.1	41.0	419.92	422.68	06:17
89.3	91.9	86.3	85.8	88.3	90.5	85.1	84.2	86.9	89.5	84.6	84.7	88.3	87.0	86.4	87.26	0.00	41.0	41.0	41.1	41.0	422.40	424.91	06:18
89.3	91.9	86.3	85.8	88.3	90.5	85.1	84.2	86.9	89.5	84.6	84.7	88.3	87.0	86.4	87.26	0.00	41.0	41.0	41.0	41.0	422.48	425.10	06:19
89.3	91.9	86.3	85.8	88.3	90.5	85.1	84.1	86.9	89.5	84.6	84.7	88.3	87.0	86.4	87.25	0.00	41.0	41.0	41.0	41.0	422.32	424.79	06:20

COMMENTS _____

Tested By Frank A. Deiney Date 4-6-93 Reviewed By C.L. Ridledge Date 4-6-93

AMPACITY TEST. JOB NUMBER 93-0501. SAMPLE NUMBER 93-0501-04 DATA FILE 475004no.001 04-02-1993 F-12

POSITION 1				POSITION 2				POSITION 3				POSITION AVG			AVG		AMBIENT TEMPERATURE				AMPS		
Trd1	Twh1	Tgr1	Tbk1	Trd2	Twh2	Tgr2	Tbk2	Trd3	Twh3	Tgr3	Tbk3	Tav1	Tav2	Tav3	Twave	SLOPE	Tam1	Tam2	Tam3	Taav	It	I'	TIME
89.3	91.9	86.3	85.8	88.3	90.5	85.1	84.2	86.9	89.5	84.6	84.7	88.3	87.0	86.4	87.25	0.00	40.9	41.0	41.0	41.0	422.48	424.90	06:21
89.3	91.9	86.3	85.8	88.3	90.5	85.1	84.2	86.9	89.5	84.6	84.7	88.3	87.0	86.4	87.26	0.00	41.0	41.0	41.0	41.0	420.96	423.35	06:22
89.3	91.9	86.3	85.8	88.3	90.5	85.1	84.2	86.9	89.5	84.6	84.7	88.3	87.0	86.4	87.25	0.00	41.0	41.0	41.0	41.0	421.92	424.47	06:23
89.3	91.9	86.3	85.8	88.3	90.5	85.1	84.2	86.9	89.5	84.6	84.7	88.3	87.0	86.4	87.26	0.00	40.9	40.9	40.9	40.9	421.68	423.85	06:24
89.3	91.9	86.3	85.8	88.3	90.5	85.1	84.2	86.9	89.6	84.7	84.7	88.3	87.0	86.5	87.28	0.01	40.9	40.9	40.9	40.9	421.20	423.27	06:25
89.3	91.9	86.3	85.8	88.3	90.5	85.1	84.2	86.9	89.6	84.7	84.7	88.3	87.0	86.5	87.28	0.01	40.9	40.8	41.0	40.9	421.68	423.71	06:26
89.3	92.0	86.3	85.8	88.3	90.5	85.1	84.2	86.9	89.6	84.7	84.7	88.4	87.0	86.5	87.29	0.01	40.8	40.8	40.9	40.9	422.48	424.35	06:27
89.3	91.9	86.3	85.8	88.3	90.5	85.1	84.2	86.9	89.6	84.7	84.7	88.3	87.0	86.5	87.28	0.01	40.8	40.8	40.8	40.8	422.72	424.48	06:28
89.3	91.9	86.3	85.8	88.3	90.5	85.1	84.2	86.9	89.6	84.7	84.7	88.4	87.0	86.5	87.29	0.02	40.9	40.8	40.9	40.9	422.24	424.07	06:29
89.3	92.0	86.3	85.8	88.3	90.5	85.1	84.2	86.9	89.6	84.7	84.7	88.4	87.0	86.5	87.29	0.02	40.8	40.8	40.9	40.8	422.40	424.06	06:30
89.3	92.0	86.3	85.8	88.4	90.5	85.1	84.2	86.9	89.6	84.7	84.7	88.4	87.1	86.5	87.30	0.03	40.8	40.8	40.8	40.8	422.00	423.53	06:31
89.3	92.0	86.3	85.8	88.3	90.5	85.1	84.2	86.9	89.6	84.7	84.7	88.4	87.0	86.5	87.29	0.03	40.8	40.8	40.8	40.8	421.36	422.77	06:32
89.3	91.9	86.3	85.8	88.3	90.5	85.1	84.2	86.9	89.5	84.7	84.7	88.3	87.0	86.5	87.27	0.04	40.8	40.7	40.8	40.8	421.52	422.99	06:33
89.3	92.0	86.3	85.8	88.3	90.5	85.1	84.2	86.9	89.6	84.7	84.7	88.3	87.0	86.5	87.28	0.04	40.8	40.7	40.7	40.7	421.68	422.94	06:34
89.3	92.0	86.4	85.8	88.4	90.5	85.1	84.2	86.9	89.6	84.7	84.7	88.4	87.1	86.5	87.30	0.04	40.8	40.8	40.7	40.7	422.32	423.53	06:35
89.3	92.0	86.3	85.8	88.4	90.5	85.1	84.2	86.9	89.6	84.7	84.7	88.4	87.1	86.5	87.30	0.05	40.7	40.7	40.8	40.7	421.36	422.54	06:36
89.3	92.0	86.4	85.8	88.4	90.5	85.1	84.2	87.0	89.6	84.7	84.8	88.4	87.1	86.5	87.31	0.05	40.7	40.6	40.7	40.6	421.84	422.65	06:37
89.3	92.0	86.3	85.8	88.3	90.5	85.1	84.2	86.9	89.6	84.7	84.7	88.4	87.0	86.5	87.29	0.05	40.7	40.6	40.8	40.7	415.52	416.51	06:38
89.3	92.0	86.4	85.8	88.4	90.5	85.1	84.2	86.9	89.6	84.7	84.7	88.4	87.1	86.5	87.30	0.06	40.7	40.6	40.8	40.7	421.36	422.42	06:39
89.3	92.0	86.3	85.8	88.3	90.5	85.1	84.2	87.0	89.6	84.7	84.7	88.4	87.0	86.5	87.30	0.06	40.7	40.5	40.8	40.7	420.24	421.29	06:40
89.3	92.0	86.3	85.8	88.4	90.5	85.1	84.2	86.9	89.6	84.7	84.7	88.4	87.0	86.5	87.29	0.06	40.7	40.6	40.8	40.7	420.40	421.39	06:41
89.3	92.0	86.3	85.8	88.3	90.5	85.1	84.2	86.9	89.6	84.7	84.7	88.3	87.0	86.5	87.28	0.07	40.6	40.5	40.7	40.6	421.44	422.27	06:42
89.3	92.0	86.3	85.8	88.4	90.5	85.1	84.2	87.0	89.6	84.7	84.7	88.4	87.1	86.5	87.31	0.07	40.6	40.6	40.7	40.6	421.60	422.37	06:43
89.3	92.0	86.3	85.8	88.4	90.5	85.1	84.2	86.9	89.6	84.7	84.7	88.4	87.0	86.5	87.30	0.07	40.7	40.6	40.7	40.7	420.56	421.45	06:44
89.3	92.0	86.4	85.8	88.4	90.5	85.1	84.2	87.0	89.6	84.7	84.7	88.4	87.1	86.5	87.31	0.08	40.7	40.6	40.8	40.7	421.68	422.51	06:45
89.3	92.0	86.3	85.8	88.4	90.5	85.1	84.2	87.0	89.6	84.7	84.7	88.4	87.1	86.5	87.31	0.08	40.6	40.5	40.8	40.6	421.20	421.90	06:46
89.3	92.0	86.3	85.8	88.4	90.5	85.1	84.2	86.9	89.6	84.7	84.7	88.4	87.1	86.5	87.30	0.08	40.6	40.5	40.6	40.6	421.20	421.83	06:47
89.4	92.0	86.4	85.8	88.4	90.5	85.1	84.2	87.0	89.6	84.7	84.7	88.4	87.1	86.5	87.31	0.08	40.6	40.5	40.7	40.6	420.08	420.56	06:48
89.3	92.0	86.3	85.8	88.4	90.5	85.1	84.2	86.9	89.6	84.7	84.7	88.4	87.0	86.5	87.29	0.08	40.5	40.4	40.6	40.5	420.88	421.15	06:49
89.4	92.0	86.4	85.8	88.4	90.5	85.1	84.2	87.0	89.6	84.7	84.7	88.4	87.1	86.5	87.31	0.08	40.5	40.3	40.6	40.4	420.88	420.84	06:50
89.4	92.0	86.4	85.8	88.4	90.6	85.1	84.2	87.0	89.6	84.7	84.7	88.4	87.1	86.5	87.32	0.08	40.4	40.2	40.5	40.4	421.52	421.16	06:51
89.3	92.0	86.3	85.8	88.4	90.5	85.1	84.2	86.9	89.6	84.7	84.7	88.4	87.1	86.5	87.30	0.08	40.4	40.2	40.5	40.3	421.52	421.09	06:52
89.3	92.0	86.3	85.8	88.4	90.5	85.1	84.2	86.9	89.6	84.7	84.7	88.4	87.1	86.5	87.31	0.08	40.3	40.1	40.5	40.3	420.24	419.54	06:53
89.3	92.0	86.3	85.8	88.4	90.5	85.1	84.2	86.9	89.6	84.7	84.7	88.4	87.0	86.5	87.29	0.08	40.3	40.0	40.3	40.2	420.88	419.88	06:54
89.3	92.0	86.3	85.8	88.4	90.5	85.1	84.2	86.9	89.6	84.6	84.7	88.4	87.1	86.5	87.29	0.08	40.2	40.0	40.3	40.2	421.04	419.99	06:55
89.3	92.0	86.3	85.6	88.4	90.6	85.1	84.2	86.9	89.6	84.7	84.7	88.4	87.1	86.5	87.30	0.08	40.2	40.0	40.3	40.2	421.04	419.75	06:56
89.3	92.0	86.3	85.8	88.4	90.5	85.1	84.2	86.9	89.6	84.7	84.7	88.4	87.0	86.5	87.29	0.07	40.1	40.0	40.3	40.1	421.84	420.56	06:57
89.3	92.0	86.3	85.8	88.4	90.5	85.1	84.2	86.9	89.6	84.7	84.7	88.4	87.0	86.5	87.29	0.07	40.1	40.0	40.3	40.1	421.20	419.89	06:58
89.3	92.0	86.3	85.8	88.4	90.6	85.1	84.2	87.0	89.5	84.7	84.7	88.4	87.1	86.5	87.31	0.07	40.1	39.9	40.3	40.1	420.72	419.06	06:59
89.3	92.0	86.3	85.8	88.4	90.5	85.1	84.2	86.9	89.6	84.7	84.7	88.4	87.0	86.5	87.29	0.07	40.1	39.9	40.3	40.1	420.80	419.23	07:00
89.3	92.0	86.3	85.8	88.3	90.5	85.1	84.2	86.9	89.6	84.7	84.7	88.3	87.0	86.5	87.28	0.07	40.0	39.8	40.2	40.0	420.32	418.51	07:01
89.3	92.0	86.3	85.8	88.3	90.5	85.1	84.2	86.9	89.6	84.6	84.7	88.3	87.0	86.4	87.27	0.06	40.0	39.8	40.1	40.0	420.72	418.78	07:02
89.3	92.0	86.3	85.8	88.3	90.5	85.1	84.2	86.9	89.6	84.6	84.7	88.3	87.0	86.4	87.27	0.06	39.9	39.7	40.1	39.9	420.56	418.51	07:03
89.3	92.0	86.3	85.8	88.3	90.5	85.1	84.2	86.9	89.6	84.6	84.7	88.3	87.0	86.5	87.27	0.05	39.9	39.8	40.0	39.9	419.28	417.08	07:04
89.3	92.0	86.3	85.8	88.3	90.5	85.1	84.2	86.9	89.6	84.6	84.7	88.3	87.0	86.4	87.27	0.05	40.0	39.7	40.1	39.9	419.60	417.49	07:05
89.3	92.0	86.3	85.8	88.3	90.5	85.1	84.2	86.9	89.6	84.6	84.7	88.3	87.0	86.4	87.27	0.04	39.9	39.6	40.0	39.9	419.20	416.81	07:06
89.3	91.9	86.3	85.7	88.3	90.5	85.1	84.1	86.9	89.5	84.6	84.7	88.3	87.0	86.4	87.24	0.04	39.8	39.6	39.9	39.8	419.60	417.03	07:07
89.3	91.9	86.3	85.8	88.3	90.5	85.1	84.1	86.9	89.5	84.6	84.7	88.3	87.0	86.4	87.25	0.03	39.8	39.5	39.9	39.7	420.32	417.52	07:08
89.3	92.0	86.3	85.7	88.3	90.5	85.1	84.2	86.9	89.5	84.6	84.7	88.3	87.0	86.4	87.25	0.03	39.8	39.6	39.9	39.8	418.32	415.68	07:09
89.3	91.9	86.3	85.8	88.3	90.5	85.1	84.1	86.9	89.5	84.6	84.7	88.3	87.0	86.4	87.25	0.02	39.8	39.6	39.9	39.8	419.04	416.36	07:10
89.3	92.0	86.3	85.7	88.3	90.5	85.1	84.1	86.9	89.5	84.6	84.7	88.3	87.0	86.4	87.25	0.02	39.8	39.6	40.0	39.8	419.44	416.67	07:11
89.3	92.0	86.3	85.7	88.3	90.5	85.1	84.1	86.9	89.5	84.6	84.7	88.3	87.0	86.4	87.24	0.01	39.8	39.5	39.8	39.7	419.04	416.17	07:12
89.3	91.9	86.3	85.7	88.3	90.5	85.1	84.1	86.9	89.5	84.6	84.7	88.3	87.0	86.4	87.24	0.01	39.7	39.5	39.8	39.7	419.44	416.40	07:13
89.3	92.0	86.3	85.7	88.3	90.5	85.1	84.1	86.9	89.5	84.6	84.7	88.3	87.0	86.4	87.25	-0.00	39.7	39.5	39.9	39.7	420.32	417.22	07:14
89.3	91.9	86.3	85.7	88.3	90.5	85.0	84.1	86.9	89.5	84.6	84.6	88.3	87.0	86.4	87.23	-0.01	39.7	39.5	39.8	39.6	420.08	416.87	07:15
89.2	91.9	86.2	85.7	88.3	90.4	85.0	84.1	86.8	89.5	84.5	84.6	88.3	86.9	86.4	87.20	-0.02	39.6	39.5	39.9	39.7	420.08	417.11	07:16
89.3	91.9	86.3	85.7	88.3	90.5	85.0	84.1	86.9	89.5	84.6	84.6	88.3	87.0	86.4	87.21	-0.03	39.6	39.5	39.8	39.6	419.04	415.90	07:17
89.3	91.9	86.2	85.7	88.3	90.5	85.0	84.1	86.8	89.5	84.6	84.6	88.3	87.0	86.4	87.21	-0.04	39.6	39.4	39.8	39.6	420.32	417.17	07:18
89.3	91.9	86.3	85.7	88.3	90.5	85.0	84.1	86.9	89.5	84.6	84.6	88.3	87.0	86.4	87.22	-0.05	39.7	39.4	39.9	39.6	419.84	416.68	07:19
89.2	91.9	86.2	85.7	88.3	90.4	85.0	84.1	86.8	89.5	84.5	84.6	88.3	86.9	86.4	87.19	-0.06	39.6	39.4	39.6	39.5	419.44	415.94	07:20

COMMENTS

Tested By Frank A. Deeney Date 4-6-93 Reviewed By C L Rutledge Date 4-6-93

AMPACITY TEST, JOB NUMBER 93-0501, SAMPLE NUMBER 93-0501-09 DATA FILE 475009no.001 04-06-1993 F-1

POSITION 1				POSITION 2				POSITION 3				POSITION AVG			AVG		AMBIENT TEMPERATURE				AMPS		
Trd1	Twh1	Tgr1	Tbk1	Trd2	Twh2	Tgr2	Tbk2	Trd3	Twh3	Tgr3	Tbk3	Tav1	Tav2	Tav3	Twave	SLOPE	Taa1	Taa2	Taa3	Taav	It	I'	TIME
90.8	90.7	83.4	83.7	90.0	89.5	83.8	82.8	90.6	89.4	85.1	83.2	87.1	86.5	87.1	86.91	0.17	39.9	40.0	40.1	40.0	434.64	434.46	12:39
90.8	90.7	83.4	83.7	90.1	89.5	83.8	82.8	90.6	89.4	85.1	83.2	87.1	86.5	87.1	86.91	0.15	39.8	39.9	40.1	39.9	435.76	435.28	12:40
90.8	90.7	83.4	83.7	90.1	89.5	83.8	82.8	90.6	89.4	85.1	83.2	87.1	86.5	87.1	86.91	0.13	39.8	40.0	40.1	39.9	435.20	434.74	12:41
90.8	90.7	83.4	83.7	90.1	89.5	83.8	82.8	90.6	89.4	85.1	83.2	87.2	86.5	87.1	86.93	0.11	39.8	39.9	40.1	39.9	435.60	435.01	12:42
90.8	90.7	83.4	83.7	90.1	89.5	83.8	82.8	90.6	89.4	85.1	83.2	87.2	86.5	87.1	86.93	0.09	39.8	39.9	40.1	39.9	434.48	433.88	12:43
90.8	90.7	83.4	83.7	90.1	89.5	83.8	82.8	90.6	89.4	85.1	83.2	87.2	86.5	87.1	86.92	0.08	39.7	39.9	40.1	39.9	435.28	434.65	12:44
90.8	90.7	83.4	83.7	90.0	89.5	83.8	82.8	90.5	89.4	85.1	83.1	87.2	86.5	87.1	86.91	0.06	39.8	39.9	40.1	39.9	434.24	433.75	12:45
90.8	90.7	83.4	83.7	90.1	89.5	83.8	82.8	90.6	89.4	85.1	83.2	87.2	86.5	87.1	86.93	0.05	39.7	39.9	40.0	39.9	435.76	435.03	12:46
90.8	90.7	83.4	83.7	90.1	89.5	83.8	82.8	90.5	89.4	85.1	83.1	87.2	86.5	87.0	86.91	0.04	39.7	39.9	40.0	39.9	435.12	434.37	12:47
90.8	90.7	83.4	83.7	90.1	89.5	83.8	82.8	90.5	89.4	85.1	83.2	87.2	86.5	87.1	86.92	0.02	39.7	39.8	40.0	39.8	435.92	435.08	12:48
90.8	90.7	83.4	83.7	90.1	89.5	83.8	82.8	90.6	89.4	85.1	83.2	87.2	86.5	87.1	86.93	0.02	39.7	39.8	40.0	39.8	435.20	434.31	12:49
90.8	90.7	83.4	83.7	90.1	89.5	83.8	82.8	90.6	89.4	85.1	83.2	87.2	86.5	87.1	86.93	0.01	39.8	39.8	40.0	39.9	435.60	434.85	12:50
90.8	90.7	83.4	83.7	90.1	89.5	83.8	82.8	90.5	89.4	85.1	83.1	87.2	86.5	87.0	86.91	-0.00	39.7	39.8	40.0	39.8	435.28	434.40	12:51
90.8	90.7	83.4	83.7	90.1	89.5	83.8	82.8	90.6	89.4	85.1	83.1	87.2	86.5	87.1	86.93	-0.01	39.8	39.9	40.0	39.9	435.60	434.83	12:52
90.8	90.7	83.4	83.8	90.1	89.5	83.8	82.8	90.6	89.4	85.1	83.2	87.2	86.5	87.1	86.93	-0.01	39.7	39.9	40.0	39.9	436.08	435.33	12:53
90.9	90.7	83.5	83.7	90.1	89.5	83.8	82.8	90.6	89.4	85.1	83.1	87.2	86.5	87.1	86.93	-0.02	39.7	39.8	40.0	39.8	432.64	431.75	12:54
90.8	90.7	83.5	83.7	90.1	89.5	83.8	82.8	90.5	89.4	85.1	83.1	87.2	86.5	87.0	86.92	-0.02	39.7	39.9	39.9	39.8	435.60	434.71	12:55
90.8	90.7	83.5	83.7	90.1	89.5	83.8	82.8	90.5	89.4	85.1	83.2	87.2	86.5	87.0	86.93	-0.03	39.7	39.8	40.0	39.8	435.12	434.22	12:56
90.8	90.7	83.5	83.7	90.0	89.5	83.8	82.8	90.5	89.4	85.1	83.2	87.2	86.5	87.0	86.92	-0.03	39.7	39.8	39.9	39.8	435.36	434.52	12:57
90.8	90.7	83.5	83.7	90.0	89.5	83.8	82.8	90.5	89.4	85.1	83.1	87.2	86.5	87.0	86.91	-0.04	39.7	39.8	40.0	39.8	435.04	434.28	12:58
90.8	90.7	83.5	83.8	90.0	89.5	83.8	82.8	90.5	89.4	85.1	83.2	87.2	86.5	87.0	86.93	-0.04	39.8	39.9	39.9	39.9	435.20	434.45	12:59
90.9	90.8	83.5	83.8	90.0	89.5	83.8	82.8	90.5	89.4	85.1	83.1	87.2	86.5	87.0	86.93	-0.05	39.7	39.8	40.0	39.8	436.00	435.11	13:00
90.9	90.8	83.5	83.8	90.0	89.5	83.8	82.8	90.5	89.4	85.1	83.2	87.2	86.5	87.0	86.93	-0.05	39.7	39.8	39.9	39.8	436.64	435.68	13:01
90.9	90.8	83.5	83.8	90.0	89.5	83.8	82.8	90.5	89.4	85.1	83.1	87.2	86.5	87.0	86.92	-0.05	39.7	39.8	39.9	39.8	436.48	435.57	13:02
90.8	90.7	83.5	83.8	90.0	89.4	83.8	82.8	90.5	89.4	85.1	83.1	87.2	86.5	87.0	86.91	-0.06	39.7	39.8	40.0	39.8	435.68	434.85	13:03
90.8	90.7	83.5	83.7	90.0	89.4	83.8	82.8	90.5	89.3	85.1	83.1	87.2	86.5	87.0	86.89	-0.06	39.7	39.8	39.9	39.8	435.76	434.94	13:04
90.8	90.7	83.5	83.8	90.0	89.4	83.8	82.8	90.5	89.3	85.1	83.1	87.2	86.5	87.0	86.91	-0.07	39.6	39.9	39.9	39.8	436.32	435.41	13:05
90.8	90.8	83.5	83.8	90.0	89.4	83.8	82.8	90.5	89.4	85.1	83.1	87.2	86.5	87.0	86.92	-0.07	39.7	39.8	39.9	39.8	435.92	434.99	13:06
90.8	90.7	83.5	83.8	90.0	89.4	83.8	82.8	90.5	89.3	85.1	83.1	87.2	86.5	87.0	86.90	-0.08	39.8	39.9	40.0	39.9	435.60	435.09	13:07
90.9	90.7	83.5	83.8	90.0	89.4	83.8	82.8	90.5	89.3	85.1	83.1	87.2	86.5	87.0	86.92	-0.08	39.8	40.0	40.0	39.9	435.60	435.12	13:08
90.8	90.7	83.5	83.7	90.0	89.4	83.8	82.8	90.5	89.3	85.1	83.1	87.2	86.5	87.0	86.90	-0.08	39.8	39.8	40.0	39.9	436.56	436.04	13:09
90.8	90.7	83.5	83.7	90.0	89.4	83.8	82.8	90.5	89.3	85.0	83.1	87.2	86.5	87.0	86.90	-0.08	39.8	39.8	40.0	39.8	435.84	435.21	13:10
90.8	90.7	83.5	83.8	90.0	89.4	83.8	82.8	90.5	89.3	85.1	83.1	87.2	86.5	87.0	86.90	-0.08	39.7	39.8	40.0	39.8	435.84	435.21	13:11
90.8	90.7	83.5	83.8	90.0	89.4	83.8	82.8	90.5	89.3	85.1	83.1	87.2	86.5	87.0	86.91	-0.09	39.8	39.8	40.0	39.9	435.92	435.44	13:12
90.8	90.7	83.4	83.7	90.0	89.4	83.8	82.8	90.4	89.3	85.1	83.1	87.2	86.5	87.0	86.88	-0.09	39.8	39.8	40.0	39.9	435.76	435.39	13:13
90.8	90.7	83.5	83.8	90.0	89.4	83.8	82.8	90.5	89.3	85.1	83.1	87.2	86.5	87.0	86.89	-0.09	39.8	39.9	40.0	39.9	435.76	435.46	13:14
90.8	90.7	83.5	83.7	90.0	89.4	83.8	82.8	90.4	89.3	85.1	83.1	87.2	86.5	87.0	86.88	-0.09	39.8	39.9	40.0	39.9	435.12	434.85	13:15
90.8	90.7	83.5	83.7	90.0	89.4	83.8	82.8	90.4	89.3	85.0	83.1	87.2	86.5	87.0	86.88	-0.09	39.8	39.9	40.1	39.9	435.28	435.11	13:16
90.8	90.7	83.5	83.7	90.0	89.4	83.8	82.8	90.4	89.3	85.1	83.1	87.2	86.5	87.0	86.88	-0.09	39.8	39.9	40.0	39.9	434.96	434.83	13:17
90.8	90.7	83.5	83.8	89.9	89.4	83.8	82.8	90.4	89.3	85.1	83.1	87.2	86.5	87.0	86.87	-0.09	39.9	39.9	40.0	39.9	435.76	435.65	13:18
90.8	90.7	83.5	83.8	90.0	89.4	83.8	82.8	90.4	89.3	85.1	83.1	87.2	86.5	87.0	86.89	-0.09	39.9	39.9	40.1	40.0	436.16	436.09	13:19
90.8	90.7	83.5	83.8	90.0	89.4	83.8	82.8	90.4	89.3	85.1	83.1	87.2	86.5	87.0	86.89	-0.09	39.9	40.0	40.1	40.0	435.12	435.27	13:20
90.8	90.7	83.5	83.7	89.9	89.4	83.7	82.8	90.4	89.3	85.1	83.1	87.2	86.5	87.0	86.87	-0.09	39.8	40.0	40.1	40.0	435.52	435.68	13:21
90.8	90.7	83.5	83.8	90.0	89.4	83.8	82.8	90.4	89.3	85.1	83.1	87.2	86.5	87.0	86.90	-0.08	39.9	40.0	40.1	40.0	434.80	434.98	13:22
90.8	90.7	83.5	83.8	89.9	89.4	83.8	82.8	90.4	89.3	85.1	83.1	87.2	86.5	87.0	86.87	-0.08	39.8	40.0	40.1	40.0	434.96	435.07	13:23
90.8	90.7	83.5	83.8	89.9	89.4	83.8	82.8	90.4	89.3	85.1	83.1	87.2	86.5	87.0	86.88	-0.08	39.9	39.9	40.1	40.0	434.96	435.03	13:24
90.8	90.7	83.5	83.8	89.9	89.4	83.8	82.8	90.4	89.3	85.1	83.1	87.2	86.5	87.0	86.88	-0.07	39.8	40.0	40.2	40.0	434.56	434.64	13:25
90.8	90.7	83.5	83.8	89.9	89.4	83.8	82.8	90.4	89.3	85.0	83.1	87.2	86.5	87.0	86.87	-0.07	39.9	40.0	40.2	40.0	435.28	435.58	13:26
90.8	90.7	83.5	83.8	89.9	89.4	83.8	82.8	90.4	89.3	85.1	83.1	87.2	86.5	87.0	86.88	-0.07	39.9	40.0	40.2	40.0	435.76	436.03	13:27
90.8	90.7	83.5	83.8	89.9	89.4	83.8	82.8	90.4	89.3	85.1	83.1	87.2	86.5	87.0	86.88	-0.07	39.9	40.1	40.2	40.0	436.40	436.80	13:28
90.8	90.7	83.5	83.8	89.9	89.4	83.8	82.8	90.4	89.3	85.0	83.1	87.2	86.5	87.0	86.87	-0.07	40.0	40.1	40.2	40.1	436.64	437.31	13:29
90.8	90.7	83.5	83.8	89.9	89.4	83.8	82.8	90.4	89.3	85.0	83.1	87.2	86.5	87.0	86.88	-0.06	40.0	40.1	40.2	40.1	436.48	437.03	13:30
90.8	90.7	83.5	83.8	89.9	89.4	83.8	82.8	90.4	89.3	85.0	83.1	87.2	86.5	87.0	86.88	-0.06	39.9	40.0	40.2	40.0	436.08	436.51	13:31
90.8	90.7	83.5	83.8	89.9	89.4	83.8	82.8	90.4	89.3	85.0	83.1	87.2	86.5	87.0	86.88	-0.06	40.0	40.0	40.2	40.1	435.92	436.48	13:32
90.9	90.7	83.5	83.8	89.9	89.4	83.8	82.8	90.4	89.3	85.0	83.1	87.2	86.5	87.0	86.88	-0.06	39.9	40.1	40.2	40.1	435.52	436.10	13:33
90.9	90.8	83.5	83.8	89.9	89.4	83.8	82.8	90.4	89.3	85.1	83.1	87.2	86.5	87.0	86.89	-0.06	40.0	40.2	40.3	40.1	435.92	436.72	13:34
90.8	90.7	83.5	83.8	89.9	89.4	83.7	82.8	90.4	89.3	85.0	83.1	87.2	86.5	87.0	86.87	-0.06	39.9	40.1	40.2	40.1	434.64	435.25	13:35
90.9	90.7	83.5	83.8	89.9	89.4	83.8	82.8	90.4	89.3	85.0	83.1	87.2	86.5	87.0	86.89	-0.06	40.0	40.2	40.3	40.1	435.44	436.19	13:36
90.9	90.8	83.5	83.8	89.9	89.4	83.8	82.8	90.4	89.3	85.1	83.1	87.2	86.5	87.0	86.89	-0.06	40.0	40.2	40.3	40.2	435.20	436.09	13:37
90.8	90.7	83.5	83.8	89.9	89.4	83.8	82.8	90.4	89.3	85.0	83.1	87.2	86.5	87.0	86.88	-0.06	40.0	40.2	40.3	40.1	435.92	436.84	13:38

COMMENTS ____________________

Tested By *C L Rutledge* Date *4-6-93* Reviewed By *Frank A. Dinny* Date *4-6-93*

AMPACITY TEST. JOB NUMBER 93-0501. SAMPLE NUMBER 93-0501-09 DATA FILE 475009no.001 04-06-1993 F-1

POSITION 1				POSITION 2				POSITION 3				POSITION AVG			AVG		AMBIENT TEMPERATURE				AMPS		
Trd1	Twh1	Tgr1	Tbk1	Trd2	Twh2	Tgr2	Tbk2	Trd3	Twh3	Tgr3	Tbk3	Tav1	Tav2	Tav3	Twave	SLOPE	Tam1	Tam2	Tam3	Taav	It	I'	TIME
90.8	90.7	83.5	83.8	89.9	89.3	83.7	82.8	90.4	89.3	85.0	83.1	87.2	86.4	86.9	86.86	-0.06	40.0	40.2	40.3	40.1	435.52	436.49	13:39
90.8	90.7	83.5	83.8	89.9	89.3	83.8	82.8	90.4	89.3	85.0	83.1	87.2	86.4	86.9	86.87	-0.06	40.1	40.1	40.3	40.2	436.08	437.13	13:40
90.8	90.7	83.5	83.8	89.9	89.3	83.8	82.8	90.4	89.3	85.0	83.1	87.2	86.4	86.9	86.87	-0.06	40.0	40.2	40.4	40.2	435.52	436.68	13:41
90.9	90.8	83.5	83.8	89.9	89.4	83.8	82.8	90.4	89.3	85.1	83.1	87.2	86.5	87.0	86.89	-0.06	40.1	40.2	40.3	40.2	436.16	437.26	13:42
90.9	90.8	83.5	83.8	89.9	89.4	83.8	82.8	90.4	89.3	85.0	83.1	87.2	86.5	87.0	86.88	-0.06	40.1	40.2	40.3	40.2	435.44	436.58	13:43
90.9	90.8	83.6	83.8	89.9	89.4	83.8	82.8	90.4	89.3	85.1	83.1	87.3	86.5	87.0	86.90	-0.06	40.0	40.2	40.3	40.2	435.52	436.62	13:44
90.8	90.8	83.5	83.8	89.9	89.3	83.8	82.8	90.4	89.3	85.0	83.1	87.2	86.4	86.9	86.87	-0.06	40.1	40.2	40.3	40.2	435.76	437.02	13:45
90.9	90.8	83.6	83.8	89.9	89.4	83.8	82.8	90.4	89.3	85.1	83.1	87.3	86.5	87.0	86.90	-0.06	40.1	40.2	40.3	40.2	435.28	436.39	13:46
90.9	90.8	83.6	83.8	89.9	89.4	83.8	82.8	90.4	89.3	85.0	83.1	87.3	86.5	86.9	86.89	-0.06	40.0	40.2	40.3	40.2	436.16	437.23	13:47
90.9	90.8	83.5	83.8	89.9	89.4	83.8	82.8	90.4	89.3	85.0	83.1	87.2	86.5	86.9	86.88	-0.05	40.1	40.2	40.3	40.2	435.52	436.71	13:48
90.9	90.8	83.6	83.8	89.9	89.4	83.8	82.8	90.4	89.3	85.1	83.1	87.3	86.5	87.0	86.91	-0.05	40.1	40.2	40.4	40.2	436.24	437.43	13:49
90.9	90.8	83.6	83.8	89.9	89.4	83.8	82.8	90.4	89.3	85.1	83.1	87.3	86.5	87.0	86.90	-0.05	40.1	40.2	40.3	40.2	435.52	436.76	13:50
90.9	90.8	83.6	83.9	89.9	89.4	83.8	82.8	90.4	89.3	85.0	83.1	87.3	86.5	87.0	86.91	-0.04	40.1	40.3	40.4	40.3	435.12	436.52	13:51
90.9	90.8	83.6	83.8	89.9	89.4	83.8	82.8	90.4	89.3	85.1	83.1	87.3	86.5	87.0	86.91	-0.04	40.1	40.3	40.4	40.3	436.32	437.76	13:52
90.9	90.8	83.6	83.8	89.9	89.4	83.8	82.8	90.4	89.3	85.0	83.1	87.3	86.5	87.0	86.90	-0.03	40.0	40.3	40.4	40.3	436.48	437.80	13:53
90.9	90.8	83.6	83.8	89.9	89.4	83.8	82.8	90.4	89.3	85.1	83.1	87.3	86.5	87.0	86.91	-0.03	40.2	40.3	40.5	40.3	436.64	438.16	13:54
90.9	90.8	83.6	83.8	89.9	89.4	83.8	82.8	90.4	89.3	85.0	83.1	87.3	86.5	87.0	86.91	-0.02	40.2	40.2	40.4	40.3	436.40	437.82	13:55
90.9	90.8	83.6	83.9	89.9	89.4	83.8	82.8	90.4	89.3	85.1	83.1	87.3	86.5	87.0	86.91	-0.02	40.1	40.3	40.5	40.3	436.40	437.95	13:56
90.9	90.8	83.6	83.9	89.9	89.4	83.8	82.8	90.4	89.3	85.1	83.2	87.3	86.5	87.0	86.92	-0.01	40.2	40.3	40.5	40.3	436.56	438.20	13:57
90.9	90.8	83.6	83.9	89.9	89.4	83.8	82.8	90.4	89.3	85.1	83.1	87.3	86.5	87.0	86.92	-0.01	40.2	40.3	40.5	40.3	437.04	438.72	13:58
90.9	90.8	83.6	83.9	89.9	89.4	83.8	82.8	90.4	89.3	85.1	83.1	87.3	86.5	87.0	86.91	-0.00	40.2	40.3	40.5	40.3	437.28	438.84	13:59
90.9	90.8	83.6	83.9	89.9	89.4	83.8	82.8	90.4	89.3	85.1	83.1	87.3	86.5	87.0	86.93	0.00	40.2	40.3	40.5	40.3	437.12	438.71	14:00
90.9	90.8	83.6	83.9	90.0	89.4	83.8	82.8	90.4	89.3	85.1	83.1	87.3	86.5	87.0	86.93	0.01	40.2	40.3	40.5	40.3	436.64	438.15	14:01
90.9	90.8	83.6	83.9	89.9	89.4	83.8	82.8	90.4	89.3	85.1	83.2	87.3	86.5	87.0	86.94	0.02	40.2	40.3	40.4	40.3	437.28	438.76	14:02
90.9	90.8	83.6	83.9	89.9	89.4	83.8	82.8	90.4	89.3	85.1	83.1	87.3	86.5	87.0	86.94	0.03	40.2	40.3	40.5	40.3	436.40	437.98	14:03
90.9	90.8	83.6	83.9	90.0	89.4	83.8	82.8	90.4	89.3	85.1	83.2	87.3	86.5	87.0	86.94	0.03	40.2	40.4	40.5	40.3	437.12	438.78	14:04
90.9	90.8	83.6	83.9	89.9	89.4	83.8	82.8	90.4	89.3	85.1	83.1	87.3	86.5	87.0	86.93	0.03	40.2	40.3	40.5	40.3	436.16	437.84	14:05
90.9	90.8	83.6	83.9	89.9	89.4	83.8	82.8	90.4	89.3	85.1	83.2	87.3	86.5	87.0	86.94	0.04	40.3	40.3	40.5	40.4	435.76	437.55	14:06
91.0	90.8	83.7	83.9	90.0	89.4	83.8	82.8	90.4	89.3	85.1	83.2	87.3	86.5	87.0	86.95	0.05	40.2	40.4	40.5	40.4	435.68	437.38	14:07
91.0	90.9	83.7	83.9	90.0	89.4	83.8	82.8	90.4	89.3	85.1	83.2	87.4	86.5	87.0	86.96	0.06	40.2	40.3	40.5	40.4	437.44	439.22	14:08
91.0	90.9	83.7	83.9	90.0	89.4	83.8	82.9	90.5	89.3	85.1	83.2	87.4	86.5	87.0	86.97	0.06	40.2	40.3	40.5	40.3	434.48	436.05	14:09
91.0	90.9	83.7	83.9	90.0	89.4	83.8	82.9	90.4	89.3	85.1	83.2	87.4	86.5	87.0	86.96	0.07	40.3	40.4	40.5	40.4	435.20	436.97	14:10
90.9	90.9	83.7	83.9	89.9	89.4	83.8	82.8	90.4	89.3	85.1	83.2	87.3	86.5	87.0	86.95	0.08	40.2	40.4	40.5	40.4	433.84	435.68	14:11
91.0	90.9	83.7	83.9	90.0	89.4	83.8	82.8	90.5	89.3	85.1	83.2	87.4	86.5	87.0	86.96	0.08	40.3	40.4	40.5	40.4	433.92	435.77	14:12
91.0	90.9	83.7	83.9	90.0	89.4	83.8	82.8	90.4	89.3	85.1	83.2	87.4	86.5	87.0	86.95	0.09	40.3	40.4	40.5	40.4	433.52	435.50	14:13
91.0	90.9	83.7	83.9	90.0	89.4	83.8	82.8	90.4	89.3	85.1	83.2	87.4	86.5	87.0	86.96	0.09	40.3	40.4	40.6	40.4	434.72	436.65	14:14
91.0	90.9	83.7	83.9	90.0	89.4	83.8	82.9	90.5	89.3	85.1	83.2	87.4	86.5	87.0	86.97	0.09	40.3	40.4	40.5	40.4	432.72	434.77	14:15
91.0	90.9	83.7	83.9	89.9	89.4	83.8	82.8	90.4	89.3	85.1	83.2	87.4	86.5	87.0	86.96	0.10	40.3	40.4	40.6	40.4	433.52	435.55	14:16
90.9	90.8	83.6	83.9	89.9	89.4	83.8	82.8	90.4	89.3	85.1	83.1	87.3	86.5	87.0	86.93	0.10	40.3	40.4	40.5	40.4	433.04	435.12	14:17
91.0	90.9	83.7	84.0	90.0	89.4	83.8	82.8	90.4	89.3	85.1	83.1	87.4	86.5	87.0	86.96	0.10	40.3	40.4	40.6	40.4	434.08	436.08	14:18
91.0	90.9	83.7	83.9	90.0	89.4	83.8	82.8	90.4	89.3	85.1	83.2	87.4	86.5	87.0	86.96	0.10	40.3	40.4	40.7	40.5	434.00	436.25	14:19
91.0	90.9	83.7	83.9	90.0	89.4	83.8	82.8	90.4	89.3	85.1	83.2	87.4	86.5	87.0	86.96	0.11	40.4	40.4	40.6	40.5	434.80	436.92	14:20
91.0	90.9	83.7	84.0	90.0	89.4	83.8	82.8	90.4	89.3	85.1	83.2	87.4	86.5	87.0	86.97	0.11	40.3	40.4	40.6	40.5	434.80	436.93	14:21
91.0	90.9	83.7	83.9	89.9	89.4	83.8	82.8	90.4	89.3	85.1	83.2	87.4	86.5	87.0	86.96	0.11	40.3	40.4	40.6	40.5	434.40	436.55	14:22
91.0	90.9	83.7	83.9	89.9	89.4	83.8	82.8	90.4	89.3	85.1	83.2	87.4	86.5	87.0	86.96	0.11	40.3	40.5	40.6	40.5	434.00	436.17	14:23
91.0	90.9	83.7	84.0	90.0	89.4	83.8	82.8	90.4	89.3	85.1	83.2	87.4	86.5	87.0	86.97	0.11	40.3	40.4	40.6	40.4	434.32	436.29	14:24
91.0	90.9	83.7	84.0	90.0	89.4	83.8	82.8	90.4	89.3	85.1	83.2	87.4	86.5	87.0	86.97	0.11	40.4	40.5	40.6	40.5	433.84	436.08	14:25
91.0	90.9	83.7	84.0	90.0	89.4	83.8	82.9	90.5	89.3	85.1	83.2	87.4	86.5	87.0	86.98	0.11	40.4	40.5	40.6	40.5	435.20	437.57	14:26
91.0	90.9	83.7	84.0	90.0	89.4	83.8	82.9	90.4	89.3	85.1	83.2	87.4	86.5	87.0	86.98	0.12	40.4	40.5	40.7	40.5	435.92	438.33	14:27
91.0	90.9	83.7	84.0	90.0	89.4	83.8	82.9	90.4	89.3	85.1	83.2	87.4	86.5	87.0	86.97	0.12	40.3	40.5	40.7	40.5	436.16	438.43	14:28
91.0	90.9	83.7	84.0	90.0	89.4	83.8	82.9	90.5	89.3	85.1	83.2	87.4	86.5	87.0	86.99	0.12	40.3	40.4	40.7	40.5	436.32	438.54	14:29
91.0	90.9	83.7	84.0	90.0	89.4	83.9	82.9	90.5	89.3	85.1	83.2	87.4	86.5	87.0	86.99	0.12	40.4	40.4	40.6	40.5	436.48	438.57	14:30
91.0	90.9	83.7	84.0	90.0	89.4	83.9	82.9	90.5	89.3	85.1	83.2	87.4	86.5	87.0	87.00	0.12	40.5	40.5	40.6	40.5	437.36	439.68	14:31
91.0	90.9	83.7	84.0	90.0	89.4	83.9	82.9	90.5	89.3	85.1	83.2	87.4	86.5	87.0	87.00	0.12	40.4	40.4	40.6	40.5	436.96	439.20	14:32
91.0	90.9	83.7	84.0	90.0	89.4	83.8	82.9	90.5	89.3	85.1	83.2	87.4	86.5	87.0	86.99	0.13	40.4	40.4	40.7	40.5	435.04	437.27	14:33
91.0	90.9	83.7	84.0	90.0	89.4	83.9	82.9	90.5	89.3	85.2	83.2	87.4	86.5	87.0	87.01	0.13	40.4	40.4	40.7	40.5	436.32	438.61	14:34
91.1	90.9	83.8	84.1	90.0	89.4	83.9	82.9	90.5	89.4	85.1	83.2	87.4	86.5	87.1	87.02	0.13	40.4	40.5	40.7	40.5	437.04	439.46	14:35
91.1	90.9	83.8	84.0	90.0	89.4	83.9	82.9	90.5	89.3	85.1	83.2	87.4	86.6	87.1	87.02	0.13	40.4	40.6	40.7	40.6	437.28	439.89	14:36
91.0	90.9	83.7	84.0	90.0	89.4	83.9	82.9	90.5	89.3	85.2	83.2	87.4	86.5	87.0	87.00	0.14	40.4	40.5	40.7	40.5	436.72	439.24	14:37
91.1	91.0	83.8	84.1	90.0	89.5	83.9	82.9	90.5	89.4	85.2	83.3	87.5	86.6	87.1	87.04	0.14	40.4	40.5	40.7	40.5	435.68	438.01	14:38

COMMENTS

Tested By C L Rutledge Date 4-6-93 Reviewed By Frank A. Dewney Date 4-6-93

AMPACITY TEST, JOB NUMBER 93-0501, SAMPLE NUMBER 93-0501-09 DATA FILE 475009no.001 04-06-1993 F-15

POSITION 1				POSITION 2				POSITION 3				POSITION AVG			AVG		AMBIENT TEMPERATURE				AMPS		
Trd1	Twh1	Tgr1	Tbk1	Trd2	Twh2	Tgr2	Tbk2	Trd3	Twh3	Tgr3	Tbk3	Tav1	Tav2	Tav3	Twave	SLOPE	Tam1	Tam2	Tam3	Taav	It	I'	TIME
91.1	91.0	83.8	84.1	90.0	89.5	83.9	82.9	90.5	89.4	85.2	83.2	87.5	86.6	87.1	87.04	0.14	40.5	40.5	40.7	40.6	436.48	438.97	14:39
91.1	91.0	83.8	84.1	90.0	89.5	83.9	82.9	90.5	89.4	85.2	83.2	87.5	86.6	87.1	87.03	0.14	40.5	40.5	40.7	40.5	434.16	436.55	14:40
91.1	91.0	83.8	84.1	90.0	89.4	83.9	82.9	90.5	89.4	85.2	83.2	87.5	86.6	87.1	87.04	0.14	40.5	40.5	40.7	40.6	433.76	436.26	14:41
91.1	91.0	83.8	84.1	90.0	89.4	83.9	82.9	90.5	89.4	85.2	83.3	87.5	86.6	87.1	87.03	0.14	40.4	40.5	40.7	40.5	433.04	435.41	14:42
91.1	91.0	83.8	84.1	90.0	89.5	83.9	82.9	90.5	89.4	85.2	83.2	87.5	86.6	87.1	87.04	0.14	40.3	40.5	40.7	40.5	433.36	435.59	14:43
91.1	91.0	83.8	84.1	90.0	89.5	83.9	82.9	90.5	89.4	85.2	83.2	87.5	86.6	87.1	87.04	0.15	40.5	40.5	40.7	40.5	434.00	436.38	14:44
91.1	91.0	83.8	84.1	90.0	89.4	83.9	82.9	90.5	89.4	85.2	83.2	87.5	86.6	87.1	87.04	0.15	40.4	40.5	40.7	40.5	434.48	436.84	14:45
91.1	91.0	83.8	84.1	90.0	89.4	83.9	82.9	90.5	89.3	85.1	83.2	87.5	86.6	87.1	87.03	0.15	40.4	40.5	40.7	40.5	434.48	436.88	14:46
91.1	91.0	83.8	84.1	90.0	89.4	83.9	82.9	90.5	89.3	85.2	83.2	87.5	86.5	87.1	87.03	0.14	40.5	40.5	40.7	40.6	434.32	436.78	14:47
91.1	91.0	83.8	84.1	90.0	89.4	83.9	82.9	90.5	89.4	85.2	83.3	87.5	86.6	87.1	87.04	0.14	40.5	40.5	40.7	40.5	434.00	436.34	14:48
91.1	91.0	83.8	84.1	90.0	89.5	83.9	82.9	90.5	89.4	85.2	83.3	87.5	86.6	87.1	87.06	0.15	40.5	40.5	40.7	40.6	433.36	435.75	14:49
91.1	91.0	83.8	84.1	90.0	89.5	83.9	82.9	90.5	89.4	85.2	83.3	87.5	86.6	87.1	87.05	0.15	40.5	40.5	40.6	40.5	432.64	434.86	14:50
91.1	91.0	83.8	84.1	90.0	89.5	83.9	82.9	90.5	89.4	85.2	83.3	87.5	86.6	87.1	87.05	0.15	40.5	40.4	40.7	40.5	431.68	433.88	14:51
91.1	91.0	83.8	84.1	90.0	89.4	83.9	82.9	90.5	89.3	85.2	83.3	87.5	86.6	87.1	87.03	0.15	40.4	40.4	40.7	40.5	432.56	434.74	14:52
91.1	91.0	83.8	84.1	90.0	89.5	83.9	82.9	90.5	89.4	85.2	83.2	87.5	86.6	87.1	87.05	0.14	40.4	40.4	40.6	40.5	433.36	435.45	14:53
91.1	91.0	83.8	84.1	90.0	89.4	83.9	82.9	90.5	89.4	85.2	83.3	87.5	86.6	87.1	87.04	0.14	40.4	40.4	40.6	40.5	432.48	434.54	14:54
91.1	91.0	83.8	84.1	90.0	89.4	83.9	82.9	90.5	89.4	85.2	83.3	87.5	86.6	87.1	87.05	0.14	40.4	40.4	40.6	40.5	433.68	435.65	14:55
91.1	91.0	83.8	84.1	90.0	89.4	83.9	82.9	90.5	89.4	85.2	83.3	87.5	86.6	87.1	87.05	0.14	40.3	40.4	40.6	40.4	433.36	435.13	14:56
91.1	91.0	83.8	84.1	90.0	89.4	83.9	82.9	90.5	89.4	85.2	83.2	87.5	86.6	87.1	87.04	0.14	40.3	40.3	40.6	40.4	434.16	436.00	14:57
91.1	91.0	83.8	84.1	90.0	89.5	83.9	82.9	90.5	89.4	85.2	83.3	87.5	86.6	87.1	87.06	0.14	40.3	40.4	40.5	40.4	433.60	435.29	14:58
91.1	91.0	83.8	84.1	90.0	89.5	83.9	82.9	90.5	89.4	85.2	83.3	87.5	86.6	87.1	87.06	0.14	40.3	40.4	40.5	40.4	433.36	435.03	14:59
91.1	91.0	83.8	84.1	90.0	89.5	83.9	82.9	90.5	89.4	85.2	83.3	87.5	86.6	87.1	87.06	0.14	40.3	40.4	40.5	40.4	433.52	435.17	15:00
91.1	91.0	83.8	84.1	90.0	89.5	83.9	82.9	90.5	89.4	85.2	83.3	87.5	86.6	87.1	87.06	0.14	40.2	40.4	40.5	40.3	434.24	435.69	15:01
91.1	91.0	83.8	84.1	90.0	89.5	83.9	82.9	90.5	89.4	85.2	83.3	87.5	86.6	87.1	87.06	0.14	40.2	40.3	40.5	40.3	433.12	434.58	15:02
91.1	91.0	83.8	84.1	90.0	89.4	83.9	82.9	90.5	89.4	85.2	83.2	87.5	86.6	87.1	87.04	0.14	40.3	40.3	40.4	40.3	433.84	435.38	15:03
91.1	91.0	83.8	84.1	90.0	89.5	83.9	82.9	90.5	89.4	85.2	83.3	87.5	86.6	87.1	87.07	0.14	40.3	40.3	40.5	40.3	432.56	434.04	15:04
91.1	91.0	83.8	84.1	90.0	89.5	83.9	82.9	90.5	89.4	85.2	83.3	87.5	86.6	87.1	87.07	0.13	40.2	40.3	40.4	40.3	433.84	435.07	15:05
91.1	91.0	83.8	84.1	90.0	89.5	83.9	82.9	90.5	89.4	85.2	83.3	87.5	86.6	87.1	87.06	0.13	40.3	40.2	40.4	40.3	433.12	434.36	15:06
91.1	91.0	83.8	84.1	90.0	89.4	83.9	82.9	90.5	89.4	85.2	83.3	87.5	86.6	87.1	87.06	0.13	40.2	40.3	40.4	40.3	434.00	435.15	15:07
91.1	91.0	83.8	84.1	90.0	89.5	83.9	82.9	90.5	89.4	85.2	83.3	87.5	86.6	87.1	87.07	0.13	40.3	40.3	40.5	40.3	433.36	434.86	15:08
91.1	91.0	83.8	84.1	90.0	89.5	83.9	82.9	90.5	89.4	85.2	83.3	87.5	86.6	87.1	87.07	0.13	40.2	40.2	40.4	40.3	433.52	434.74	15:09
91.1	91.0	83.8	84.1	90.0	89.5	83.9	82.9	90.5	89.4	85.2	83.3	87.5	86.6	87.1	87.08	0.13	40.2	40.2	40.5	40.3	434.00	435.21	15:10
91.1	91.0	83.9	84.2	90.0	89.5	83.9	83.0	90.5	89.4	85.2	83.3	87.5	86.6	87.1	87.08	0.13	40.2	40.3	40.5	40.3	435.52	436.82	15:11
91.1	91.1	83.9	84.2	90.0	89.5	83.9	83.0	90.5	89.4	85.2	83.3	87.6	86.6	87.1	87.09	0.14	40.2	40.3	40.5	40.3	434.96	436.27	15:12
91.1	91.1	83.9	84.2	90.0	89.5	83.9	83.0	90.5	89.4	85.2	83.3	87.6	86.6	87.1	87.09	0.14	40.2	40.3	40.5	40.3	434.80	435.93	15:13
91.2	91.1	83.9	84.2	90.0	89.5	83.9	83.0	90.5	89.4	85.2	83.3	87.6	86.6	87.1	87.09	0.14	40.1	40.3	40.5	40.3	433.36	434.66	15:14
91.2	91.1	83.9	84.2	90.1	89.5	83.9	83.0	90.6	89.4	85.2	83.3	87.6	86.6	87.1	87.11	0.14	40.1	40.4	40.4	40.3	434.16	435.25	15:15
91.1	91.0	83.9	84.1	90.0	89.5	83.9	82.9	90.5	89.4	85.2	83.3	87.5	86.6	87.1	87.08	0.14	40.2	40.3	40.4	40.3	432.00	433.02	15:16
91.1	91.1	83.9	84.2	90.0	89.5	83.9	82.9	90.5	89.4	85.2	83.3	87.6	86.6	87.1	87.08	0.13	40.1	40.2	40.3	40.2	432.08	432.85	15:17
91.2	91.1	83.9	84.2	90.0	89.5	83.9	83.0	90.5	89.4	85.2	83.3	87.6	86.6	87.1	87.09	0.13	40.1	40.2	40.3	40.2	432.00	432.76	15:18
91.2	91.1	83.9	84.1	90.0	89.5	83.9	83.0	90.5	89.4	85.2	83.3	87.6	86.6	87.1	87.09	0.13	40.0	40.2	40.3	40.2	431.92	432.65	15:19
91.2	91.1	83.9	84.1	90.0	89.5	83.9	82.9	90.5	89.4	85.2	83.3	87.6	86.6	87.1	87.08	0.13	40.2	40.3	40.3	40.3	432.32	433.51	15:20
91.2	91.1	83.9	84.1	90.0	89.5	83.9	82.9	90.5	89.4	85.2	83.3	87.6	86.6	87.1	87.08	0.12	40.2	40.3	40.4	40.3	432.40	433.54	15:21
91.2	91.0	83.9	84.1	90.0	89.5	83.9	82.9	90.5	89.4	85.2	83.3	87.5	86.6	87.1	87.07	0.12	40.1	40.2	40.3	40.2	431.44	432.36	15:22
91.1	91.1	83.9	84.1	90.0	89.4	83.9	82.9	90.5	89.4	85.2	83.3	87.5	86.6	87.1	87.07	0.11	40.1	40.2	40.3	40.2	431.92	432.93	15:23
91.1	91.0	83.9	84.2	90.0	89.4	83.9	82.9	90.5	89.4	85.2	83.3	87.6	86.6	87.1	87.07	0.11	40.1	40.2	40.3	40.2	432.48	433.30	15:24
91.1	91.0	83.8	84.2	90.0	89.4	83.9	82.9	90.5	89.4	85.2	83.3	87.5	86.6	87.1	87.06	0.10	40.1	40.1	40.3	40.2	432.24	432.92	15:25
91.1	91.0	83.8	84.1	90.0	89.4	83.9	82.9	90.5	89.4	85.2	83.3	87.5	86.6	87.1	87.06	0.09	40.1	40.2	40.3	40.2	432.32	433.22	15:26
91.2	91.1	83.9	84.2	90.0	89.5	83.9	82.9	90.5	89.4	85.2	83.3	87.6	86.6	87.1	87.08	0.09	40.0	40.2	40.3	40.2	433.20	433.86	15:27
91.2	91.1	83.9	84.2	90.0	89.5	83.9	82.9	90.5	89.4	85.2	83.3	87.6	86.6	87.1	87.09	0.09	40.0	40.2	40.3	40.1	432.40	432.95	15:28
91.1	91.0	83.9	84.1	90.0	89.5	83.9	82.9	90.5	89.4	85.2	83.3	87.5	86.6	87.1	87.06	0.08	40.1	40.3	40.3	40.2	433.36	434.27	15:29
91.2	91.1	83.9	84.2	90.0	89.5	83.9	82.9	90.5	89.4	85.2	83.3	87.6	86.6	87.1	87.08	0.08	40.0	40.2	40.3	40.2	432.24	432.89	15:30
91.2	91.1	83.9	84.2	90.0	89.5	83.9	82.9	90.5	89.4	85.2	83.3	87.6	86.6	87.1	87.09	0.08	40.1	40.1	40.3	40.2	433.52	434.14	15:31
91.2	91.1	83.8	84.1	90.0	89.4	83.9	82.9	90.5	89.4	85.2	83.3	87.5	86.6	87.1	87.07	0.07	40.1	40.1	40.3	40.2	431.12	431.80	15:32
91.2	91.1	83.9	84.2	90.0	89.4	83.9	82.9	90.5	89.4	85.2	83.3	87.6	86.6	87.1	87.08	0.07	40.0	40.1	40.2	40.1	431.76	432.13	15:33
91.2	91.1	83.9	84.2	90.0	89.5	83.9	82.9	90.5	89.4	85.2	83.3	87.6	86.6	87.1	87.08	0.06	40.0	40.0	40.2	40.1	431.36	431.70	15:34
91.2	91.1	83.9	84.2	90.0	89.4	83.9	82.9	90.5	89.4	85.2	83.3	87.6	86.6	87.1	87.08	0.06	40.1	40.1	40.3	40.2	431.20	431.85	15:35
91.1	91.0	83.9	84.1	90.0	89.4	83.9	82.9	90.5	89.4	85.2	83.3	87.5	86.6	87.1	87.06	0.06	40.1	40.2	40.3	40.2	431.76	432.62	15:36
91.2	91.1	83.8	84.1	90.0	89.4	83.9	82.9	90.5	89.4	85.2	83.3	87.5	86.6	87.1	87.06	0.05	40.1	40.1	40.3	40.1	431.04	431.67	15:37
91.1	91.0	83.8	84.1	90.0	89.4	83.9	82.9	90.5	89.4	85.2	83.2	87.5	86.5	87.1	87.05	0.05	40.1	40.1	40.3	40.2	431.12	431.88	15:38

COMMENTS

Tested By C L Rutledge Date 4-6-93 Reviewed By Frank A. Demmy Date 4-6-93

AMPACITY TEST. JOB NUMBER 93-0501. SAMPLE NUMBER 93-0501-05 DATA FILE 4C6G05NO.002 03-29-1993 F-16

POSITION 1				POSITION 2				POSITION 3				POSITION AVG			AVG		AMBIENT TEMPERATURE				AMPS		
Trd1	Twh1	Tbk1	Tgr1	Trd2	Twh2	Tbk2	Tgr2	Trd3	Twh3	Tbk3	Tgr3	Tav1	Tav2	Tav3	Twave	SLOPE	Tam1	Tam2	Tam3	Taav	It	I'	TIME
86.4	86.9	85.1	86.7	87.6	88.7	88.3	89.3	89.5	90.3	89.1	87.3	86.3	88.5	89.1	87.93	-0.00	40.4	40.4	39.9	40.2	59.36	59.84	12:37
86.4	86.9	85.1	86.7	87.6	88.7	88.3	89.4	89.5	90.3	89.1	87.4	86.3	88.5	89.1	87.95	-0.01	40.4	40.4	39.9	40.2	59.28	59.74	12:38
86.4	86.9	85.1	86.6	87.6	88.6	88.3	89.3	89.5	90.3	89.1	87.4	86.3	88.5	89.0	87.93	-0.01	40.4	40.4	39.9	40.3	59.16	59.65	12:39
86.4	86.8	85.1	86.6	87.6	88.6	88.3	89.3	89.4	90.3	89.1	87.3	86.2	88.5	89.0	87.91	-0.02	40.4	40.4	39.9	40.2	59.24	59.73	12:40
86.4	86.8	85.1	86.6	87.5	88.6	88.3	89.3	89.4	90.3	89.1	87.3	86.2	88.4	89.0	87.89	-0.02	40.5	40.4	39.9	40.3	59.28	59.79	12:41
86.3	86.8	85.1	86.6	87.5	88.6	88.3	89.3	89.4	90.2	89.0	87.3	86.2	88.4	89.0	87.86	-0.03	40.4	40.5	40.0	40.3	59.12	59.67	12:42
86.4	86.8	85.1	86.6	87.5	88.6	88.3	89.3	89.4	90.2	89.0	87.3	86.2	88.4	89.0	87.87	-0.04	40.4	40.5	39.9	40.3	59.36	59.89	12:43
86.4	86.8	85.1	86.6	87.5	88.6	88.3	89.3	89.4	90.3	89.0	87.3	86.2	88.4	89.0	87.89	-0.05	40.4	40.5	40.0	40.3	59.56	60.08	12:44
86.4	86.8	85.1	86.6	87.5	88.6	88.3	89.3	89.4	90.3	89.1	87.3	86.2	88.4	89.0	87.89	-0.05	40.3	40.4	39.9	40.2	59.56	60.05	12:45
86.4	86.8	85.1	86.6	87.6	88.6	88.3	89.3	89.4	90.3	89.1	87.3	86.2	88.4	89.0	87.90	-0.06	40.4	40.4	39.9	40.2	59.52	60.01	12:46
86.4	86.9	85.1	86.7	87.6	88.7	88.3	89.3	89.5	90.3	89.1	87.3	86.3	88.5	89.1	87.93	-0.06	40.4	40.5	40.0	40.3	59.48	59.98	12:47
86.4	86.9	85.1	86.7	87.6	88.7	88.3	89.4	89.5	90.3	89.1	87.3	86.3	88.5	89.0	87.93	-0.06	40.4	40.5	39.9	40.3	59.40	59.88	12:48
86.4	86.9	85.1	86.7	87.6	88.7	88.3	89.3	89.5	90.3	89.1	87.4	86.3	88.5	89.1	87.93	-0.06	40.4	40.4	39.9	40.2	59.44	59.92	12:49
86.4	86.9	85.1	86.7	87.6	88.7	88.3	89.4	89.5	90.3	89.1	87.4	86.3	88.5	89.1	87.94	-0.06	40.3	40.4	39.9	40.2	59.48	59.93	12:50
86.4	86.9	85.1	86.7	87.6	88.7	88.3	89.3	89.5	90.3	89.1	87.4	86.3	88.5	89.1	87.94	-0.06	40.4	40.4	40.0	40.3	59.52	60.01	12:51
86.4	86.9	85.2	86.7	87.6	88.7	88.3	89.4	89.5	90.3	89.1	87.4	86.3	88.5	89.1	87.94	-0.06	40.4	40.4	40.0	40.3	59.36	59.84	12:52
86.5	86.9	85.2	86.7	87.6	88.7	88.4	89.4	89.5	90.3	89.1	87.4	86.3	88.5	89.1	87.97	-0.06	40.4	40.4	40.0	40.3	59.56	60.03	12:53
86.4	86.9	85.2	86.7	87.6	88.7	88.4	89.4	89.5	90.3	89.1	87.4	86.3	88.5	89.1	87.97	-0.06	40.3	40.4	39.9	40.2	59.40	59.85	12:54
86.5	86.9	85.2	86.7	87.6	88.7	88.4	89.4	89.5	90.4	89.2	87.4	86.3	88.5	89.1	87.99	-0.05	40.4	40.4	39.9	40.2	59.72	60.16	12:55
86.5	86.9	85.2	86.7	87.7	88.7	88.4	89.4	89.5	90.4	89.2	87.4	86.3	88.6	89.1	88.01	-0.04	40.4	40.5	39.9	40.3	59.52	59.97	12:56
86.5	86.9	85.2	86.7	87.7	88.8	88.4	89.4	89.6	90.4	89.2	87.4	86.4	88.6	89.2	88.03	-0.04	40.4	40.4	39.9	40.2	59.68	60.11	12:57
86.5	86.9	85.2	86.7	87.7	88.8	88.4	89.4	89.6	90.4	89.2	87.4	86.4	88.6	89.2	88.03	-0.03	40.4	40.4	39.9	40.2	59.52	59.95	12:58
86.6	87.0	85.3	86.8	87.7	88.8	88.5	89.5	89.6	90.4	89.2	87.5	86.4	88.6	89.2	88.07	-0.02	40.4	40.4	40.0	40.2	59.68	60.08	12:59
86.5	87.0	85.2	86.8	87.7	88.8	88.4	89.5	89.6	90.4	89.2	87.5	86.4	88.6	89.2	88.05	-0.01	40.3	40.4	39.9	40.2	59.40	59.79	13:00
86.5	87.0	85.2	86.8	87.7	88.8	88.4	89.5	89.6	90.4	89.2	87.5	86.4	88.6	89.2	88.05	0.00	40.4	40.3	40.0	40.2	59.56	59.97	13:01
86.5	87.0	85.2	86.8	87.7	88.8	88.5	89.5	89.6	90.4	89.2	87.5	86.4	88.6	89.2	88.06	0.01	40.4	40.4	40.0	40.2	59.40	59.80	13:02
86.6	87.0	85.3	86.8	87.7	88.8	88.5	89.5	89.6	90.4	89.2	87.5	86.4	88.6	89.2	88.06	0.02	40.3	40.4	39.9	40.2	59.44	59.83	13:03
86.5	87.0	85.2	86.8	87.7	88.8	88.4	89.5	89.6	90.4	89.2	87.5	86.4	88.6	89.2	88.04	0.03	40.3	40.4	39.9	40.2	59.24	59.65	13:04
86.5	87.0	85.2	86.7	87.7	88.8	88.4	89.4	89.6	90.4	89.2	87.5	86.4	88.6	89.2	88.03	0.04	40.3	40.4	39.9	40.2	59.24	59.65	13:05
86.5	86.9	85.2	86.7	87.6	88.7	88.4	89.4	89.5	90.4	89.2	87.4	86.3	88.5	89.1	87.99	0.04	40.3	40.3	39.9	40.2	59.12	59.53	13:06
86.4	86.9	85.2	86.7	87.6	88.7	88.4	89.4	89.5	90.4	89.2	87.4	86.3	88.5	89.1	87.98	0.04	40.3	40.3	39.9	40.2	59.20	59.63	13:07
86.5	86.9	85.2	86.7	87.7	88.7	88.4	89.4	89.5	90.4	89.2	87.4	86.3	88.5	89.1	88.00	0.05	40.4	40.4	39.9	40.2	59.36	59.79	13:08
86.5	86.9	85.2	86.7	87.6	88.7	88.4	89.4	89.5	90.4	89.2	87.4	86.3	88.5	89.1	87.98	0.05	40.3	40.4	39.9	40.2	59.16	59.59	13:09
86.5	86.9	85.2	86.7	87.6	88.7	88.4	89.4	89.5	90.3	89.1	87.4	86.3	88.5	89.1	87.97	0.05	40.3	40.4	39.9	40.2	59.16	59.60	13:10
86.4	86.9	85.2	86.7	87.6	88.7	88.4	89.4	89.5	90.3	89.1	87.4	86.3	88.5	89.1	87.96	0.05	40.4	40.3	40.0	40.2	59.16	59.61	13:11
86.4	86.9	85.2	86.7	87.6	88.7	88.4	89.4	89.5	90.3	89.1	87.4	86.3	88.5	89.1	87.96	0.05	40.4	40.4	39.9	40.2	59.24	59.71	13:12
86.4	86.9	85.1	86.7	87.6	88.7	88.3	89.4	89.5	90.3	89.1	87.4	86.3	88.5	89.1	87.95	0.04	40.3	40.3	39.9	40.2	59.16	59.60	13:13
86.4	86.8	85.1	86.7	87.6	88.7	88.3	89.3	89.5	90.3	89.1	87.4	86.3	88.5	89.1	87.94	0.04	40.4	40.4	40.0	40.2	59.16	59.63	13:14
86.4	86.8	85.1	86.6	87.6	88.6	88.3	89.3	89.5	90.3	89.1	87.4	86.2	88.5	89.1	87.91	0.04	40.3	40.3	39.9	40.2	59.36	59.82	13:15
86.4	86.8	85.1	86.6	87.6	88.7	88.3	89.3	89.5	90.3	89.1	87.4	86.2	88.5	89.1	87.93	0.03	40.4	40.3	39.9	40.2	59.28	59.74	13:16
86.4	86.8	85.1	86.6	87.6	88.7	88.3	89.3	89.5	90.3	89.1	87.4	86.3	88.5	89.1	87.94	0.03	40.4	40.4	40.0	40.2	59.28	59.76	13:17
86.4	86.9	85.1	86.7	87.6	88.7	88.3	89.4	89.5	90.3	89.1	87.4	86.3	88.5	89.1	87.95	0.03	40.4	40.4	39.9	40.2	59.28	59.73	13:18
86.4	86.8	85.1	86.7	87.6	88.7	88.3	89.4	89.5	90.3	89.1	87.4	86.3	88.5	89.1	87.94	0.03	40.4	40.4	40.0	40.2	59.24	59.71	13:19
86.4	86.9	85.1	86.7	87.6	88.7	88.3	89.4	89.5	90.3	89.1	87.4	86.3	88.5	89.1	87.95	0.03	40.4	40.3	39.9	40.2	59.40	59.84	13:20
86.4	86.9	85.1	86.7	87.6	88.7	88.4	89.4	89.5	90.3	89.1	87.4	86.3	88.5	89.1	87.96	0.03	40.4	40.4	39.9	40.2	59.28	59.73	13:21
86.4	86.9	85.1	86.6	87.6	88.7	88.3	89.4	89.5	90.3	89.1	87.4	86.3	88.5	89.1	87.94	0.02	40.4	40.4	39.9	40.2	59.28	59.74	13:22
86.4	86.9	85.1	86.7	87.6	88.7	88.3	89.4	89.5	90.3	89.1	87.4	86.3	88.5	89.1	87.95	0.02	40.3	40.4	39.9	40.2	59.24	59.69	13:23
86.5	86.9	85.2	86.7	87.6	88.7	88.4	89.4	89.5	90.3	89.1	87.4	86.3	88.5	89.1	87.97	0.03	40.4	40.3	39.9	40.2	59.40	59.83	13:24
86.4	86.9	85.1	86.7	87.6	88.7	88.4	89.4	89.5	90.3	89.1	87.4	86.3	88.5	89.1	87.96	0.03	40.4	40.4	40.0	40.2	59.28	59.73	13:25
86.5	86.9	85.2	86.7	87.6	88.7	88.4	89.4	89.5	90.4	89.1	87.4	86.3	88.5	89.1	87.98	0.03	40.4	40.4	40.0	40.3	59.28	59.73	13:26
86.4	86.9	85.2	86.7	87.6	88.7	88.4	89.4	89.5	90.3	89.1	87.4	86.3	88.5	89.1	87.97	0.03	40.4	40.4	40.0	40.3	59.20	59.66	13:27
86.4	86.9	85.2	86.7	87.6	88.7	88.4	89.4	89.5	90.3	89.1	87.4	86.3	88.5	89.1	87.97	0.03	40.4	40.5	40.0	40.3	59.40	59.88	13:28
86.4	86.9	85.2	86.7	87.6	88.7	88.4	89.4	89.5	90.3	89.1	87.4	86.3	88.5	89.1	87.98	0.03	40.5	40.4	40.0	40.3	59.36	59.85	13:29
86.4	86.9	85.2	86.7	87.6	88.7	88.4	89.4	89.5	90.3	89.1	87.4	86.3	88.5	89.1	87.96	0.03	40.4	40.4	40.0	40.3	59.36	59.84	13:30
86.5	86.9	85.2	86.7	87.6	88.7	88.4	89.4	89.5	90.4	89.2	87.4	86.3	88.5	89.1	87.98	0.04	40.4	40.4	40.0	40.3	59.44	59.90	13:31
86.4	86.9	85.2	86.7	87.7	88.7	88.4	89.4	89.5	90.3	89.2	87.4	86.3	88.5	89.1	87.98	0.04	40.4	40.4	40.0	40.2	59.40	59.85	13:32
86.4	86.9	85.2	86.7	87.6	88.7	88.4	89.4	89.5	90.3	89.2	87.4	86.3	88.5	89.1	87.98	0.04	40.4	40.4	40.0	40.2	59.36	59.82	13:33
86.5	86.9	85.2	86.7	87.6	88.7	88.4	89.4	89.5	90.3	89.1	87.4	86.3	88.5	89.1	87.98	0.04	40.4	40.4	40.0	40.3	59.36	59.82	13:34
86.5	86.9	85.2	86.7	87.7	88.7	88.4	89.4	89.5	90.3	89.2	87.4	86.3	88.5	89.1	87.99	0.04	40.4	40.4	40.0	40.3	59.16	59.63	13:35
86.4	86.9	85.2	86.7	87.7	88.7	88.4	89.4	89.5	90.4	89.1	87.4	86.3	88.5	89.1	87.98	0.05	40.4	40.4	40.0	40.3	59.24	59.72	13:36

COMMENTS _____

Tested By C.L. Ratledge Date 3-29-93 Reviewed By Frank A. Deering Date 3-30-93

POSITION 1				POSITION 2				POSITION 3				POSITION AVG			AVG		AMBIENT TEMPERATURE				AMPS		
Trd1	Twh1	Tbk1	Tgr1	Trd2	Twh2	Tbk2	Tgr2	Trd3	Twh3	Tbk3	Tgr3	Tav1	Tav2	Tav3	Twave	SLOPE	Tam1	Tam2	Tam3	Taav	It	I'	TIME
86.5	86.9	85.2	86.7	87.6	88.7	88.4	89.4	89.5	90.3	89.1	87.4	86.3	88.5	89.1	87.97	0.04	40.4	40.4	40.0	40.3	59.40	59.88	13:37
86.4	86.9	85.2	86.7	87.6	88.7	88.4	89.4	89.5	90.3	89.1	87.4	86.3	88.5	89.1	87.97	0.04	40.4	40.4	40.0	40.3	59.36	59.84	13:38
86.4	86.9	85.2	86.7	87.6	88.7	88.4	89.4	89.5	90.3	89.1	87.4	86.3	88.5	89.1	87.97	0.04	40.3	40.4	40.0	40.2	59.36	59.82	13:39
86.5	86.9	85.2	86.7	87.6	88.7	88.4	89.4	89.5	90.3	89.1	87.4	86.3	88.5	89.1	87.97	0.03	40.4	40.4	40.0	40.2	59.24	59.70	13:40
86.4	86.9	85.2	86.7	87.6	88.7	88.4	89.4	89.5	90.3	89.1	87.4	86.3	88.5	89.1	87.96	0.02	40.4	40.3	39.9	40.2	59.40	59.84	13:41
86.5	86.9	85.2	86.7	87.7	88.7	88.4	89.4	89.5	90.4	89.2	87.4	86.3	88.5	89.1	87.99	0.02	40.3	40.3	39.9	40.2	59.24	59.64	13:42
86.5	86.9	85.2	86.7	87.7	88.7	88.4	89.4	89.5	90.3	89.2	87.4	86.3	88.5	89.1	87.98	0.01	40.3	40.3	39.9	40.2	59.36	59.77	13:43
86.4	86.9	85.1	86.6	87.6	88.7	88.4	89.4	89.5	90.3	89.1	87.4	86.3	88.5	89.1	87.95	-0.00	40.3	40.3	39.9	40.2	59.20	59.64	13:44
86.5	86.9	85.2	86.7	87.7	88.7	88.4	89.4	89.5	90.4	89.2	87.4	86.3	88.5	89.1	87.99	-0.01	40.3	40.3	39.9	40.2	59.40	59.82	13:45
86.5	86.9	85.2	86.7	87.7	88.7	88.4	89.4	89.5	90.4	89.2	87.4	86.3	88.5	89.1	87.99	-0.02	40.3	40.3	39.9	40.2	59.36	59.77	13:46
86.5	86.9	85.2	86.7	87.7	88.7	88.4	89.4	89.5	90.4	89.2	87.4	86.3	88.6	89.1	88.00	-0.02	40.3	40.3	39.9	40.2	59.44	59.83	13:47
86.5	86.9	85.2	86.7	87.7	88.7	88.4	89.4	89.6	90.4	89.2	87.4	86.3	88.6	89.1	88.01	-0.02	40.4	40.3	40.0	40.3	59.40	59.84	13:48
86.5	86.9	85.2	86.7	87.7	88.7	88.4	89.4	89.5	90.4	89.2	87.4	86.3	88.6	89.1	88.01	-0.02	40.4	40.3	40.0	40.2	59.56	60.00	13:49
86.5	86.9	85.2	86.7	87.7	88.8	88.4	89.5	89.6	90.4	89.2	87.5	86.3	88.6	89.2	88.03	-0.02	40.3	40.3	40.0	40.2	59.24	59.64	13:50
86.5	87.0	85.2	86.8	87.7	88.8	88.5	89.5	89.6	90.4	89.2	87.5	86.4	88.6	89.2	88.06	-0.02	40.4	40.3	40.0	40.2	59.56	59.96	13:51
86.5	87.0	85.2	86.8	87.7	88.8	88.5	89.5	89.6	90.4	89.2	87.5	86.4	88.6	89.2	88.06	-0.01	40.3	40.4	40.0	40.2	59.40	59.79	13:52
86.5	87.0	85.2	86.8	87.7	88.8	88.5	89.5	89.6	90.4	89.2	87.5	86.4	88.6	89.2	88.06	-0.01	40.3	40.4	40.0	40.3	59.44	59.86	13:53
86.5	87.0	85.2	86.8	87.7	88.8	88.5	89.5	89.6	90.4	89.3	87.5	86.4	88.6	89.2	88.07	-0.00	40.4	40.4	40.0	40.2	59.28	59.67	13:54
86.5	87.0	85.2	86.8	87.7	88.8	88.5	89.5	89.6	90.4	89.2	87.5	86.4	88.6	89.2	88.06	0.00	40.3	40.3	40.0	40.2	59.44	59.82	13:55
86.5	87.0	85.2	86.8	87.7	88.8	88.5	89.5	89.6	90.4	89.2	87.5	86.4	88.6	89.2	88.07	0.01	40.3	40.4	40.0	40.2	59.36	59.75	13:56
86.5	87.0	85.2	86.8	87.7	88.8	88.5	89.5	89.6	90.4	89.2	87.5	86.4	88.6	89.2	88.05	0.02	40.3	40.3	39.9	40.2	59.52	59.91	13:57
86.6	87.0	85.3	86.8	87.7	88.8	88.5	89.5	89.6	90.4	89.2	87.5	86.4	88.6	89.2	88.08	0.04	40.3	40.4	39.9	40.2	59.40	59.78	13:58
86.5	86.9	85.2	86.7	87.7	88.8	88.4	89.5	89.6	90.4	89.2	87.5	86.3	88.6	89.2	88.04	0.05	40.4	40.3	39.9	40.2	59.40	59.79	13:59
86.5	87.0	85.2	86.8	87.7	88.8	88.5	89.5	89.6	90.4	89.2	87.5	86.4	88.6	89.2	88.06	0.06	40.3	40.3	39.9	40.2	59.44	59.82	14:00
86.5	87.0	85.2	86.7	87.7	88.8	88.5	89.5	89.6	90.4	89.2	87.5	86.4	88.6	89.2	88.06	0.07	40.4	40.4	40.0	40.3	59.36	59.78	14:01
86.5	87.0	85.2	86.8	87.7	88.8	88.5	89.5	89.6	90.4	89.2	87.5	86.4	88.6	89.2	88.06	0.09	40.4	40.3	40.0	40.2	59.44	59.85	14:02
86.5	87.0	85.2	86.8	87.7	88.8	88.5	89.5	89.6	90.4	89.2	87.5	86.4	88.6	89.2	88.07	0.10	40.5	40.3	39.9	40.2	59.32	59.72	14:03
86.6	87.0	85.3	86.8	87.7	88.8	88.5	89.5	89.6	90.4	89.2	87.5	86.4	88.6	89.2	88.07	0.11	40.3	40.4	39.9	40.2	59.40	59.78	14:04
86.6	87.0	85.3	86.8	87.7	88.8	88.5	89.5	89.6	90.4	89.2	87.5	86.4	88.6	89.2	88.07	0.13	40.4	40.4	39.9	40.2	59.40	59.80	14:05
86.5	87.0	85.2	86.8	87.7	88.8	88.5	89.5	89.6	90.4	89.2	87.5	86.4	88.6	89.2	88.07	0.13	40.3	40.4	40.0	40.2	59.40	59.79	14:06
86.6	87.0	85.2	86.8	87.7	88.8	88.5	89.5	89.6	90.5	89.3	87.5	86.4	88.6	89.2	88.07	0.14	40.4	40.4	40.0	40.3	59.36	59.76	14:07
86.5	86.9	85.2	86.8	87.7	88.8	88.5	89.5	89.6	90.5	89.2	87.5	86.4	88.6	89.2	88.06	0.14	40.3	40.4	39.9	40.2	59.32	59.72	14:08
86.5	87.0	85.2	86.8	87.7	88.8	88.5	89.5	89.6	90.4	89.2	87.5	86.4	88.6	89.2	88.06	0.15	40.3	40.4	40.0	40.2	59.28	59.67	14:09
86.5	87.0	85.2	86.7	87.7	88.8	88.5	89.5	89.6	90.4	89.2	87.5	86.4	88.6	89.2	88.05	0.15	40.3	40.3	40.0	40.2	59.36	59.76	14:10
86.5	87.0	85.2	86.7	87.7	88.8	88.5	89.5	89.6	90.4	89.2	87.5	86.4	88.6	89.2	88.05	0.15	40.4	40.3	39.9	40.2	59.28	59.66	14:11
86.5	86.9	85.2	86.7	87.7	88.8	88.4	89.4	89.6	90.4	89.2	87.5	86.3	88.6	89.2	88.03	0.15	40.4	40.4	39.9	40.2	59.40	59.82	14:12
86.5	86.9	85.2	86.8	87.7	88.8	88.5	89.5	89.6	90.4	89.2	87.5	86.4	88.6	89.2	88.05	0.15	40.4	40.4	39.9	40.2	59.24	59.64	14:13
86.5	86.9	85.2	86.8	87.7	88.8	88.5	89.5	89.6	90.4	89.2	87.5	86.4	88.6	89.2	88.05	0.15	40.4	40.3	39.9	40.2	59.24	59.63	14:14
86.5	86.9	85.2	86.7	87.7	88.8	88.4	89.5	89.6	90.4	89.2	87.5	86.4	88.6	89.2	88.04	0.14	40.4	40.4	39.9	40.2	59.28	59.68	14:15
86.5	86.9	85.2	86.8	87.7	88.8	88.5	89.5	89.6	90.4	89.2	87.5	86.4	88.6	89.2	88.04	0.14	40.4	40.4	40.0	40.3	59.32	59.75	14:16
86.5	86.9	85.2	86.8	87.7	88.8	88.4	89.5	89.6	90.4	89.2	87.5	86.4	88.6	89.2	88.04	0.13	40.4	40.4	40.0	40.3	59.24	59.67	14:17
86.5	86.9	85.2	86.7	87.7	88.8	88.4	89.5	89.6	90.4	89.2	87.5	86.4	88.6	89.2	88.04	0.13	40.4	40.4	40.0	40.2	59.40	59.82	14:18
86.5	86.9	85.2	86.7	87.7	88.8	88.4	89.4	89.6	90.4	89.2	87.5	86.3	88.6	89.2	88.03	0.12	40.4	40.3	39.9	40.2	59.28	59.70	14:19
86.5	86.9	85.2	86.7	87.7	88.8	88.4	89.4	89.6	90.4	89.2	87.5	86.3	88.6	89.2	88.02	0.12	40.4	40.4	39.9	40.2	59.28	59.70	14:20
86.5	86.9	85.2	86.7	87.7	88.8	88.4	89.5	89.6	90.4	89.2	87.5	86.3	88.6	89.2	88.03	0.11	40.4	40.4	39.9	40.2	59.28	59.70	14:21
86.5	86.9	85.2	86.7	87.7	88.8	88.4	89.4	89.6	90.4	89.2	87.5	86.3	88.6	89.2	88.03	0.11	40.4	40.4	39.9	40.2	59.24	59.67	14:22
86.5	86.9	85.2	86.7	87.7	88.8	88.4	89.5	89.6	90.4	89.2	87.5	86.4	88.6	89.2	88.04	0.10	40.4	40.4	40.0	40.2	59.24	59.65	14:23
86.5	86.9	85.2	86.7	87.7	88.8	88.4	89.4	89.6	90.4	89.2	87.5	86.3	88.6	89.1	88.01	0.10	40.4	40.4	39.9	40.2	59.28	59.71	14:24
86.5	86.9	85.2	86.7	87.7	88.7	88.4	89.4	89.6	90.4	89.2	87.4	86.3	88.6	89.1	88.01	0.09	40.4	40.4	40.0	40.3	59.28	59.73	14:25
86.5	86.9	85.2	86.7	87.7	88.8	88.4	89.4	89.6	90.4	89.2	87.4	86.3	88.6	89.1	88.01	0.09	40.4	40.4	39.9	40.3	59.24	59.68	14:26
86.5	86.9	85.2	86.7	87.7	88.7	88.4	89.4	89.5	90.4	89.2	87.4	86.3	88.6	89.1	88.00	0.08	40.5	40.4	39.9	40.3	59.16	59.61	14:27
86.4	86.9	85.2	86.7	87.7	88.7	88.4	89.4	89.5	90.4	89.2	87.4	86.3	88.5	89.1	87.99	0.07	40.4	40.4	39.9	40.2	59.28	59.73	14:28
86.5	86.9	85.2	86.7	87.7	88.7	88.4	89.4	89.6	90.4	89.2	87.4	86.3	88.6	89.1	88.01	0.06	40.5	40.4	40.0	40.3	59.28	59.74	14:29
86.5	86.9	85.2	86.7	87.7	88.7	88.4	89.4	89.5	90.4	89.2	87.4	86.3	88.6	89.1	88.00	0.05	40.5	40.4	40.0	40.3	59.24	59.69	14:30
86.5	86.9	85.2	86.7	87.7	88.7	88.4	89.4	89.5	90.4	89.2	87.4	86.3	88.5	89.1	88.00	0.05	40.4	40.4	40.0	40.3	59.24	59.69	14:31
86.4	86.9	85.2	86.7	87.7	88.7	88.4	89.4	89.5	90.4	89.2	87.4	86.3	88.5	89.1	87.98	0.04	40.5	40.4	40.0	40.3	59.16	59.64	14:32
86.5	86.9	85.2	86.7	87.6	88.7	88.4	89.4	89.5	90.4	89.2	87.4	86.3	88.5	89.1	87.98	0.03	40.5	40.4	40.0	40.3	59.12	59.61	14:33
86.4	86.9	85.2	86.7	87.6	88.7	88.4	89.4	89.5	90.3	89.1	87.4	86.3	88.5	89.1	87.97	0.02	40.4	40.4	39.9	40.3	59.12	59.59	14:34
86.4	86.9	85.1	86.7	87.6	88.7	88.4	89.4	89.5	90.3	89.1	87.4	86.3	88.5	89.1	87.96	0.01	40.5	40.4	40.0	40.3	59.32	59.82	14:35
86.5	86.9	85.2	86.7	87.7	88.7	88.4	89.4	89.5	90.4	89.2	87.4	86.3	88.5	89.1	87.99	0.00	40.5	40.4	40.0	40.3	59.36	59.84	14:36

COMMENTS ______________________________

Tested By *C L Rutledge* Date *3-29-93* Reviewed By *Frank A. Delaney* Date *3-30-93*

POSITION 1				POSITION 2				POSITION 3				POSITION AVG			AVG		AMBIENT TEMPERATURE				AMPS		
Trd1	Twh1	Tbk1	Tgr1	Trd2	Twh2	Tbk2	Tgr2	Trd3	Twh3	Tbk3	Tgr3	Tav1	Tav2	Tav3	Twave	SLOPE	Tam1	Tam2	Tam3	Taav	It	I'	TIME
86.4	86.9	85.1	86.7	87.6	88.7	88.4	89.4	89.5	90.3	89.2	87.4	86.3	88.5	89.1	87.96	-0.01	40.3	40.4	40.0	40.2	59.28	59.74	14:37
86.4	86.9	85.1	86.7	87.6	88.7	88.4	89.4	89.5	90.4	89.1	87.4	86.3	88.5	89.1	87.97	-0.02	40.4	40.4	40.0	40.3	59.40	59.88	14:38
86.4	86.9	85.2	86.7	87.6	88.7	88.4	89.4	89.5	90.4	89.2	87.4	86.3	88.5	89.1	87.98	-0.03	40.4	40.4	40.0	40.3	59.40	59.87	14:39
86.5	86.9	85.2	86.7	87.7	88.7	88.4	89.4	89.6	90.4	89.2	87.4	86.3	88.6	89.1	88.01	-0.04	40.4	40.4	40.0	40.2	59.40	59.84	14:40
86.5	86.9	85.2	86.7	87.7	88.7	88.4	89.4	89.5	90.4	89.2	87.4	86.3	88.5	89.1	87.99	-0.05	40.4	40.4	40.0	40.3	59.36	59.82	14:41
86.5	86.9	85.2	86.7	87.7	88.8	88.4	89.4	89.6	90.4	89.2	87.4	86.3	88.6	89.1	88.01	-0.05	40.5	40.4	40.0	40.3	59.40	59.85	14:42
86.5	86.9	85.2	86.7	87.7	88.8	88.4	89.4	89.6	90.4	89.2	87.4	86.3	88.6	89.1	88.01	-0.06	40.4	40.4	40.0	40.2	59.32	59.75	14:43
86.5	86.9	85.2	86.7	87.7	88.7	88.4	89.4	89.6	90.4	89.2	87.4	86.3	88.6	89.2	88.01	-0.07	40.4	40.4	40.0	40.3	59.36	59.80	14:44
86.5	86.9	85.2	86.7	87.7	88.8	88.4	89.4	89.6	90.4	89.2	87.4	86.3	88.6	89.1	88.02	-0.07	40.3	40.3	40.0	40.2	59.40	59.82	14:45
86.5	86.9	85.2	86.7	87.7	88.8	88.4	89.4	89.6	90.4	89.2	87.5	86.3	88.6	89.2	88.02	-0.08	40.4	40.4	39.9	40.2	59.40	59.83	14:46
86.5	86.9	85.2	86.7	87.7	88.8	88.4	89.4	89.6	90.4	89.2	87.5	86.3	88.6	89.2	88.03	-0.08	40.3	40.4	39.9	40.2	59.36	59.77	14:47
86.5	86.9	85.2	86.7	87.7	88.8	88.4	89.4	89.6	90.4	89.2	87.5	86.3	88.6	89.2	88.03	-0.08	40.4	40.4	40.0	40.2	59.24	59.66	14:48
86.5	86.9	85.2	86.7	87.7	88.8	88.4	89.4	89.6	90.4	89.2	87.4	86.3	88.6	89.2	88.02	-0.08	40.3	40.3	40.0	40.2	59.28	59.69	14:49
86.5	86.9	85.2	86.7	87.7	88.8	88.4	89.4	89.6	90.4	89.2	87.5	86.3	88.6	89.2	88.03	-0.08	40.4	40.3	40.0	40.2	59.32	59.74	14:50
86.5	86.9	85.2	86.7	87.7	88.8	88.4	89.4	89.6	90.4	89.2	87.4	86.3	88.6	89.2	88.03	-0.08	40.4	40.3	39.9	40.2	59.24	59.65	14:51
86.5	86.9	85.2	86.7	87.7	88.8	88.4	89.4	89.6	90.4	89.2	87.5	86.3	88.6	89.2	88.03	-0.08	40.3	40.4	39.9	40.2	59.28	59.68	14:52
86.5	86.9	85.2	86.7	87.7	88.8	88.4	89.4	89.6	90.4	89.2	87.5	86.3	88.6	89.2	88.02	-0.07	40.3	40.3	39.9	40.2	59.04	59.43	14:53
86.5	86.9	85.2	86.7	87.7	88.7	88.4	89.4	89.6	90.4	89.2	87.4	86.3	88.6	89.1	88.00	-0.07	40.4	40.4	40.0	40.3	59.32	59.77	14:54
86.5	86.9	85.2	86.7	87.7	88.7	88.4	89.4	89.6	90.4	89.2	87.4	86.3	88.6	89.1	88.01	-0.07	40.3	40.4	39.9	40.2	59.44	59.85	14:55
86.5	86.9	85.2	86.7	87.7	88.7	88.4	89.4	89.6	90.4	89.2	87.5	86.3	88.6	89.2	88.02	-0.07	40.3	40.3	39.9	40.2	59.36	59.75	14:56
86.5	86.9	85.2	86.7	87.7	88.8	88.4	89.4	89.6	90.4	89.2	87.5	86.3	88.6	89.2	88.03	-0.06	40.4	40.4	39.9	40.2	59.44	59.84	14:57
86.5	86.9	85.2	86.7	87.7	88.8	88.4	89.4	89.6	90.4	89.2	87.4	86.3	88.6	89.2	88.03	-0.06	40.3	40.4	39.8	40.2	59.40	59.79	14:58
86.5	86.9	85.2	86.7	87.7	88.8	88.4	89.4	89.6	90.4	89.2	87.5	86.3	88.6	89.2	88.03	-0.06	40.4	40.3	39.9	40.2	59.44	59.84	14:59
86.5	86.9	85.2	86.7	87.7	88.8	88.4	89.5	89.6	90.4	89.2	87.5	86.3	88.6	89.2	88.04	-0.05	40.4	40.3	39.9	40.2	59.44	59.85	15:00
86.5	86.9	85.2	86.7	87.7	88.8	88.4	89.5	89.6	90.4	89.2	87.5	86.4	88.6	89.2	88.04	-0.04	40.3	40.3	39.9	40.2	59.44	59.80	15:01
86.5	86.9	85.2	86.7	87.7	88.8	88.4	89.5	89.6	90.4	89.2	87.5	86.3	88.6	89.2	88.04	-0.04	40.3	40.3	39.9	40.2	59.36	59.74	15:02
86.5	86.9	85.2	86.8	87.7	88.8	88.4	89.5	89.6	90.4	89.2	87.5	86.4	88.6	89.2	88.05	-0.03	40.3	40.3	39.9	40.2	59.40	59.76	15:03
86.5	86.9	85.2	86.7	87.7	88.8	88.4	89.4	89.6	90.4	89.2	87.5	86.3	88.6	89.2	88.03	-0.03	40.4	40.3	39.9	40.2	59.28	59.68	15:04
86.5	86.9	85.2	86.7	87.7	88.8	88.4	89.5	89.6	90.4	89.2	87.5	86.3	88.6	89.2	88.04	-0.02	40.4	40.3	39.9	40.2	59.40	59.80	15:05
86.5	87.0	85.2	86.8	87.7	88.8	88.5	89.5	89.6	90.4	89.2	87.5	86.4	88.6	89.2	88.06	-0.01	40.5	40.3	39.9	40.2	59.36	59.77	15:06
86.5	86.9	85.2	86.7	87.7	88.8	88.4	89.5	89.6	90.4	89.2	87.5	86.4	88.6	89.2	88.05	-0.00	40.4	40.3	39.9	40.2	59.36	59.74	15:07
86.5	86.9	85.2	86.7	87.7	88.8	88.4	89.5	89.6	90.4	89.2	87.5	86.3	88.6	89.2	88.04	0.00	40.4	40.3	39.9	40.2	59.16	59.55	15:08
86.5	86.9	85.2	86.7	87.7	88.8	88.4	89.4	89.6	90.4	89.2	87.5	86.3	88.6	89.2	88.03	0.01	40.4	40.3	39.9	40.2	59.20	59.59	15:09
86.5	86.9	85.2	86.7	87.7	88.8	88.4	89.5	89.6	90.4	89.2	87.5	86.3	88.6	89.2	88.04	0.01	40.4	40.3	39.9	40.2	59.44	59.84	15:10
86.5	87.0	85.2	86.8	87.7	88.8	88.5	89.5	89.6	90.4	89.3	87.5	86.4	88.6	89.2	88.06	0.02	40.3	40.3	39.9	40.2	59.48	59.85	15:11
86.5	87.0	85.2	86.8	87.7	88.8	88.5	89.5	89.6	90.4	89.2	87.5	86.4	88.6	89.2	88.06	0.03	40.3	40.3	39.9	40.2	59.40	59.77	15:12
86.5	86.9	85.2	86.7	87.7	88.8	88.5	89.5	89.6	90.4	89.2	87.5	86.3	88.6	89.2	88.04	0.03	40.4	40.3	39.9	40.2	59.40	59.79	15:13
86.5	86.9	85.2	86.7	87.7	88.8	88.5	89.5	89.6	90.5	89.2	87.5	86.4	88.6	89.2	88.05	0.04	40.3	40.3	39.9	40.2	59.28	59.65	15:14
86.5	87.0	85.2	86.8	87.7	88.8	88.5	89.5	89.6	90.5	89.3	87.5	86.4	88.6	89.2	88.07	0.05	40.3	40.3	39.9	40.2	59.44	59.81	15:15
86.5	86.9	85.2	86.8	87.7	88.8	88.5	89.5	89.6	90.4	89.2	87.5	86.4	88.6	89.2	88.06	0.05	40.3	40.3	39.9	40.2	59.44	59.82	15:16
86.5	87.0	85.2	86.8	87.7	88.8	88.5	89.5	89.6	90.5	89.3	87.5	86.4	88.6	89.2	88.07	0.06	40.4	40.3	39.9	40.2	59.48	59.87	15:17
86.5	87.0	85.2	86.8	87.7	88.8	88.5	89.5	89.6	90.5	89.3	87.5	86.4	88.6	89.2	88.07	0.06	40.4	40.3	39.9	40.2	59.40	59.78	15:18
86.5	87.0	85.2	86.8	87.7	88.8	88.5	89.5	89.6	90.5	89.3	87.5	86.4	88.6	89.2	88.07	0.07	40.4	40.3	39.9	40.2	59.24	59.61	15:19
86.5	87.0	85.2	86.8	87.7	88.8	88.5	89.5	89.6	90.5	89.3	87.5	86.4	88.6	89.2	88.07	0.07	40.3	40.3	39.9	40.2	59.52	59.89	15:20
86.5	87.0	85.2	86.8	87.7	88.8	88.5	89.5	89.6	90.4	89.2	87.5	86.4	88.6	89.2	88.06	0.08	40.3	40.3	40.0	40.2	59.24	59.62	15:21
86.5	86.9	85.2	86.7	87.7	88.8	88.4	89.5	89.6	90.4	89.3	87.5	86.4	88.6	89.2	88.05	0.08	40.4	40.4	40.0	40.3	59.24	59.67	15:22
86.5	86.9	85.2	86.7	87.7	88.8	88.4	89.5	89.6	90.4	89.2	87.5	86.3	88.6	89.2	88.04	0.09	40.3	40.4	39.9	40.2	59.12	59.50	15:23
86.5	86.9	85.2	86.7	87.7	88.8	88.4	89.5	89.6	90.4	89.2	87.5	86.3	88.6	89.2	88.04	0.09	40.3	40.4	39.9	40.2	59.28	59.67	15:24
86.5	86.9	85.2	86.7	87.7	88.7	88.4	89.4	89.6	90.4	89.2	87.5	86.3	88.6	89.2	88.02	0.08	40.3	40.4	39.9	40.2	59.16	59.55	15:25
86.5	86.9	85.2	86.7	87.7	88.8	88.4	89.4	89.6	90.4	89.2	87.5	86.3	88.6	89.2	88.03	0.08	40.4	40.4	39.9	40.2	59.32	59.74	15:26
86.5	86.9	85.2	86.7	87.7	88.8	88.4	89.5	89.6	90.4	89.2	87.5	86.3	88.6	89.2	88.03	0.08	40.4	40.4	39.9	40.2	59.40	59.81	15:27
86.5	86.9	85.2	86.7	87.7	88.7	88.4	89.4	89.6	90.4	89.2	87.5	86.3	88.6	89.2	88.03	0.08	40.4	40.3	39.9	40.2	59.36	59.75	15:28
86.5	86.9	85.2	86.7	87.7	88.8	88.4	89.5	89.6	90.4	89.2	87.5	86.3	88.6	89.2	88.03	0.07	40.4	40.3	39.9	40.2	59.36	59.75	15:29
86.5	86.9	85.2	86.7	87.7	88.8	88.4	89.4	89.6	90.4	89.2	87.5	86.3	88.6	89.2	88.03	0.07	40.5	40.4	39.9	40.3	59.36	59.80	15:30
86.5	86.9	85.2	86.7	87.7	88.8	88.4	89.4	89.6	90.4	89.2	87.5	86.3	88.6	89.2	88.02	0.07	40.4	40.4	39.9	40.3	59.24	59.67	15:31
86.5	86.9	85.2	86.7	87.7	88.7	88.4	89.4	89.6	90.4	89.2	87.5	86.3	88.6	89.2	88.01	0.06	40.4	40.4	40.0	40.3	59.20	59.65	15:32
86.5	86.9	85.2	86.7	87.6	88.7	88.4	89.4	89.6	90.4	89.2	87.4	86.3	88.5	89.1	87.99	0.05	40.4	40.4	39.9	40.2	59.16	59.59	15:33
86.4	86.9	85.2	86.7	87.6	88.7	88.4	89.4	89.5	90.4	89.2	87.4	86.3	88.5	89.1	87.98	0.04	40.4	40.3	39.9	40.2	59.24	59.69	15:34
86.5	86.9	85.2	86.7	87.6	88.7	88.4	89.4	89.5	90.4	89.2	87.4	86.3	88.5	89.1	87.99	0.03	40.4	40.4	40.0	40.3	59.12	59.57	15:35
86.4	86.9	85.1	86.7	87.6	88.7	88.4	89.4	89.5	90.4	89.2	87.4	86.3	88.5	89.1	87.97	0.02	40.4	40.4	40.0	40.2	59.24	59.69	15:36

COMMENTS _____

Tested By C L Lutledge Date 3-29-93 Reviewed By Frank G. Deimey Date 3-30-93

AMPACITY TEST. JOB NUMBER 93-0501. SAMPLE NUMBER 93-0501-06 DATA FILE 4C6G06NO.002 03-31-1993

POSITION 1				POSITION 2				POSITION 3				POSITION AVG			AVG		AMBIENT TEMPERATURE				AMPS		
Trd1	Twh1	Tbk1	Tgr1	Trd2	Twh2	Tbk2	Tgr2	Trd3	Twh3	Tbk3	Tgr3	Tav1	Tav2	Tav3	Twave	SLOPE	Tam1	Tam2	Tam3	Taav	It	I'	TIME
87.6	88.1	86.5	88.3	88.3	89.0	87.2	90.3	90.4	90.6	89.3	86.8	87.6	88.7	89.3	88.53	-0.15	40.4	40.8	40.4	40.5	58.80	58.96	09:28
87.6	88.1	86.5	88.2	88.3	89.0	87.2	90.3	90.4	90.6	89.3	86.8	87.6	88.7	89.3	88.51	-0.14	40.5	40.7	40.5	40.6	58.80	58.99	09:29
87.6	88.1	86.5	88.2	88.3	89.0	87.2	90.3	90.4	90.6	89.3	86.8	87.6	88.7	89.3	88.52	-0.13	40.6	40.7	40.4	40.6	58.80	58.99	09:30
87.6	88.1	86.5	88.3	88.3	89.0	87.2	90.3	90.4	90.6	89.3	86.8	87.6	88.7	89.3	88.53	-0.13	40.6	40.7	40.5	40.6	58.80	59.00	09:31
87.6	88.1	86.5	88.3	88.3	89.0	87.2	90.3	90.4	90.6	89.3	86.8	87.6	88.7	89.3	88.52	-0.12	40.5	40.8	40.4	40.6	58.80	58.99	09:32
87.6	88.1	86.5	88.3	88.3	89.0	87.2	90.3	90.4	90.6	89.3	86.8	87.6	88.7	89.3	88.51	-0.12	40.5	40.8	40.4	40.6	58.80	59.01	09:33
87.6	88.1	86.5	88.3	88.3	89.0	87.2	90.3	90.4	90.6	89.3	86.8	87.6	88.7	89.3	88.52	-0.12	40.5	40.8	40.4	40.5	58.80	58.98	09:34
87.6	88.1	86.5	88.3	88.3	89.0	87.2	90.3	90.4	90.6	89.3	86.8	87.6	88.7	89.3	88.51	-0.11	40.5	40.7	40.4	40.6	58.80	59.00	09:35
87.6	88.1	86.5	88.3	88.3	89.0	87.2	90.3	90.4	90.6	89.3	86.8	87.6	88.7	89.3	88.52	-0.11	40.6	40.7	40.4	40.6	58.80	58.99	09:36
87.6	88.1	86.5	88.3	88.3	89.0	87.2	90.3	90.4	90.6	89.3	86.8	87.6	88.7	89.3	88.52	-0.10	40.6	40.9	40.4	40.6	58.80	59.02	09:37
87.6	88.1	86.5	88.3	88.3	89.0	87.2	90.3	90.4	90.6	89.3	86.8	87.6	88.7	89.3	88.52	-0.10	40.5	40.7	40.4	40.5	58.80	58.98	09:38
87.6	88.1	86.5	88.3	88.3	89.0	87.2	90.3	90.4	90.6	89.3	86.8	87.6	88.7	89.3	88.53	-0.09	40.5	40.8	40.5	40.6	58.80	59.00	09:39
87.6	88.1	86.5	88.3	88.3	89.0	87.2	90.3	90.4	90.6	89.3	86.8	87.6	88.7	89.3	88.51	-0.09	40.6	40.7	40.5	40.6	58.80	59.02	09:40
87.6	88.1	86.5	88.3	88.3	89.0	87.2	90.3	90.4	90.6	89.3	86.8	87.6	88.7	89.3	88.51	-0.09	40.7	40.7	40.5	40.6	58.80	59.04	09:41
87.6	88.1	86.5	88.3	88.3	89.0	87.2	90.3	90.4	90.6	89.3	86.8	87.6	88.7	89.3	88.51	-0.09	40.7	40.7	40.5	40.6	58.80	59.01	09:42
87.6	88.1	86.5	88.3	88.3	89.0	87.2	90.3	90.4	90.6	89.3	86.8	87.6	88.7	89.3	88.52	-0.08	40.7	40.7	40.5	40.6	58.80	59.03	09:43
87.6	88.1	86.5	88.2	88.3	89.0	87.2	90.3	90.4	90.6	89.3	86.8	87.6	88.7	89.3	88.51	-0.08	40.7	41.0	40.5	40.7	58.80	59.09	09:44
87.6	88.1	86.5	88.3	88.3	89.0	87.2	90.3	90.4	90.6	89.3	86.8	87.6	88.7	89.3	88.52	-0.08	40.6	40.9	40.5	40.7	58.80	59.06	09:45
87.6	88.1	86.5	88.2	88.3	89.0	87.2	90.3	90.4	90.6	89.3	86.8	87.6	88.7	89.3	88.51	-0.07	40.7	40.8	40.5	40.7	58.80	59.06	09:46
87.6	88.1	86.5	88.3	88.3	89.0	87.2	90.3	90.4	90.6	89.3	86.8	87.6	88.7	89.3	88.51	-0.07	40.7	40.8	40.5	40.7	58.80	59.06	09:47
87.6	88.1	86.5	88.3	88.3	89.0	87.2	90.3	90.4	90.6	89.3	86.8	87.6	88.7	89.3	88.51	-0.07	40.7	40.8	40.5	40.7	58.80	59.05	09:48
87.6	88.1	86.5	88.2	88.3	89.0	87.2	90.3	90.4	90.6	89.3	86.8	87.6	88.7	89.3	88.52	-0.06	40.6	40.8	40.5	40.6	58.80	59.04	09:49
87.6	88.1	86.5	88.2	88.3	89.0	87.2	90.3	90.4	90.6	89.3	86.8	87.6	88.7	89.3	88.51	-0.06	40.6	40.8	40.5	40.6	58.80	59.05	09:50
87.6	88.1	86.5	88.3	88.3	89.0	87.2	90.3	90.4	90.6	89.3	86.8	87.6	88.7	89.3	88.52	-0.06	40.7	40.8	40.5	40.7	58.80	59.05	09:51
87.6	88.1	86.5	88.3	88.3	89.0	87.2	90.3	90.4	90.6	89.3	86.8	87.6	88.7	89.3	88.52	-0.06	40.7	40.8	40.5	40.6	58.80	59.03	09:52
87.6	88.1	86.5	88.2	88.2	89.0	87.2	90.3	90.4	90.6	89.3	86.8	87.6	88.7	89.3	88.51	-0.06	40.6	40.8	40.5	40.6	58.80	59.03	09:53
87.6	88.1	86.5	88.3	88.3	89.0	87.2	90.3	90.4	90.6	89.3	86.8	87.6	88.7	89.3	88.52	-0.05	40.5	40.7	40.5	40.6	58.80	59.01	09:54
87.6	88.1	86.5	88.2	88.3	89.0	87.2	90.3	90.4	90.6	89.3	86.8	87.6	88.7	89.3	88.51	-0.05	40.7	40.6	40.4	40.6	58.80	59.02	09:55
87.6	88.1	86.5	88.3	88.3	89.0	87.2	90.3	90.4	90.6	89.3	86.8	87.6	88.7	89.3	88.53	-0.04	40.6	40.7	40.4	40.5	58.80	58.99	09:56
87.6	88.1	86.5	88.3	88.3	89.0	87.2	90.3	90.4	90.6	89.3	86.8	87.6	88.7	89.3	88.52	-0.04	40.5	40.6	40.4	40.5	58.80	58.95	09:57
87.6	88.1	86.5	88.3	88.3	89.0	87.2	90.3	90.4	90.6	89.3	86.8	87.6	88.7	89.3	88.53	-0.04	40.5	40.6	40.4	40.5	58.80	58.94	09:58
87.6	88.1	86.5	88.3	88.3	89.0	87.2	90.3	90.4	90.6	89.3	86.8	87.6	88.7	89.3	88.52	-0.04	40.5	40.6	40.4	40.5	58.80	58.96	09:59
87.6	88.1	86.5	88.3	88.3	89.0	87.2	90.3	90.4	90.6	89.3	86.8	87.6	88.7	89.3	88.52	-0.04	40.6	40.7	40.4	40.5	58.80	58.97	10:00
87.6	88.1	86.5	88.3	88.3	89.0	87.2	90.3	90.4	90.6	89.3	86.8	87.6	88.7	89.3	88.53	-0.03	40.4	40.6	40.3	40.5	58.80	58.93	10:01
87.6	88.1	86.5	88.3	88.3	89.0	87.2	90.3	90.4	90.6	89.3	86.8	87.6	88.7	89.3	88.52	-0.03	40.4	40.5	40.3	40.4	58.80	58.91	10:02
87.6	88.1	86.5	88.3	88.3	89.0	87.2	90.3	90.4	90.6	89.3	86.8	87.6	88.7	89.3	88.53	-0.03	40.5	40.5	40.3	40.4	58.80	58.91	10:03
87.6	88.1	86.5	88.3	88.3	89.0	87.2	90.3	90.4	90.6	89.3	86.8	87.6	88.7	89.3	88.52	-0.02	40.4	40.5	40.3	40.4	58.80	58.90	10:04
87.6	88.1	86.5	88.3	88.3	89.0	87.2	90.3	90.4	90.6	89.3	86.8	87.6	88.7	89.3	88.52	-0.02	40.3	40.5	40.3	40.4	58.80	58.89	10:05
87.6	88.1	86.5	88.3	88.3	89.0	87.2	90.3	90.4	90.6	89.3	86.8	87.6	88.7	89.3	88.53	-0.02	40.4	40.6	40.3	40.4	58.80	58.91	10:06
87.6	88.1	86.5	88.3	88.3	89.0	87.2	90.3	90.4	90.7	89.3	86.8	87.6	88.7	89.3	88.53	-0.02	40.4	40.5	40.3	40.4	58.80	58.89	10:07
87.6	88.1	86.5	88.3	88.3	89.0	87.2	90.3	90.4	90.6	89.3	86.8	87.6	88.7	89.3	88.53	-0.01	40.3	40.4	40.3	40.3	58.80	58.86	10:08
87.6	88.1	86.5	88.3	88.3	89.0	87.2	90.3	90.4	90.6	89.3	86.8	87.6	88.7	89.3	88.54	-0.01	40.4	40.5	40.3	40.4	58.80	58.89	10:09
87.6	88.1	86.5	88.3	88.3	89.0	87.2	90.3	90.4	90.6	89.3	86.8	87.6	88.7	89.3	88.52	-0.01	40.4	40.5	40.3	40.4	58.80	58.90	10:10
87.6	88.1	86.5	88.3	88.3	89.0	87.2	90.3	90.4	90.6	89.3	86.8	87.6	88.7	89.3	88.52	-0.01	40.3	40.6	40.3	40.4	58.80	58.90	10:11
87.6	88.1	86.5	88.3	88.3	89.0	87.2	90.3	90.4	90.6	89.3	86.8	87.6	88.7	89.3	88.53	-0.01	40.3	40.5	40.3	40.4	58.80	58.88	10:12
87.6	88.1	86.5	88.3	88.3	89.0	87.2	90.3	90.4	90.6	89.3	86.8	87.6	88.7	89.3	88.53	-0.01	40.3	40.4	40.2	40.3	58.80	58.83	10:13
87.6	88.1	86.5	88.3	88.3	89.0	87.2	90.3	90.4	90.7	89.3	86.8	87.6	88.7	89.3	88.54	-0.00	40.3	40.4	40.2	40.3	58.80	58.84	10:14
87.6	88.1	86.5	88.3	88.3	89.0	87.2	90.3	90.4	90.6	89.3	86.8	87.6	88.7	89.3	88.54	0.00	40.4	40.4	40.2	40.3	58.80	58.85	10:15
87.6	88.1	86.5	88.3	88.3	89.0	87.2	90.3	90.4	90.6	89.3	86.8	87.6	88.7	89.3	88.54	0.00	40.3	40.4	40.2	40.3	58.80	58.83	10:16
87.6	88.1	86.5	88.3	88.3	89.0	87.2	90.3	90.4	90.7	89.3	86.8	87.6	88.7	89.3	88.54	0.01	40.3	40.4	40.2	40.3	58.80	58.81	10:17
87.6	88.1	86.5	88.3	88.3	89.0	87.2	90.3	90.4	90.7	89.3	86.8	87.6	88.7	89.3	88.54	0.01	40.3	40.4	40.2	40.3	58.80	58.82	10:18
87.6	88.1	86.5	88.3	88.3	89.0	87.2	90.3	90.4	90.6	89.3	86.8	87.6	88.7	89.3	88.53	0.01	40.3	40.5	40.2	40.3	58.80	58.84	10:19
87.6	88.1	86.5	88.3	88.3	89.0	87.2	90.3	90.4	90.6	89.3	86.8	87.6	88.7	89.3	88.54	0.01	40.4	40.4	40.2	40.3	58.80	58.84	10:20
87.6	88.1	86.5	88.3	88.3	89.0	87.2	90.3	90.4	90.7	89.3	86.8	87.6	88.7	89.3	88.55	0.02	40.3	40.4	40.2	40.3	58.80	58.83	10:21
87.6	88.1	86.5	88.3	88.3	89.0	87.2	90.3	90.4	90.7	89.3	86.8	87.6	88.7	89.3	88.54	0.02	40.3	40.4	40.2	40.3	58.80	58.84	10:22
87.6	88.1	86.5	88.3	88.3	89.0	87.2	90.3	90.4	90.6	89.3	86.8	87.6	88.7	89.3	88.54	0.02	40.3	40.5	40.2	40.3	58.80	58.82	10:23
87.6	88.1	86.5	88.3	88.3	89.0	87.2	90.3	90.4	90.7	89.3	86.8	87.6	88.7	89.3	88.55	0.02	40.2	40.4	40.2	40.3	58.80	58.79	10:24
87.6	88.1	86.5	88.3	88.3	89.0	87.2	90.3	90.4	90.7	89.3	86.8	87.6	88.7	89.3	88.54	0.03	40.2	40.3	40.1	40.2	58.80	58.78	10:25
87.6	88.1	86.5	88.3	88.3	89.0	87.2	90.3	90.4	90.6	89.3	86.8	87.6	88.7	89.3	88.55	0.03	40.2	40.3	40.2	40.2	58.80	58.79	10:26
87.6	88.1	86.5	88.3	88.3	89.0	87.2	90.3	90.4	90.7	89.3	86.8	87.6	88.7	89.3	88.55	0.03	40.2	40.3	40.2	40.2	58.80	58.78	10:27

COMMENTS _____

Tested By C L Rutledge Date 3-31-93 Reviewed By Frank A. Deiney Date 3-31-93

AMPACITY TEST. JOB NUMBER 93-0501. SAMPLE NUMBER 93-0501-06 DATA FILE 4C6G06NO.002 03-31-1993

POSITION 1				POSITION 2				POSITION 3				POSITION AVG			AVG		AMBIENT TEMPERATURE				AMPS		
Trd1	Twh1	Tbk1	Tgr1	Trd2	Twh2	Tbk2	Tgr2	Trd3	Twh3	Tbk3	Tgr3	Tav1	Tav2	Tav3	Twave	SLOPE	Tam1	Tam2	Tam3	Taav	It	I'	TIME
87.6	88.1	86.5	88.3	88.3	89.0	87.2	90.3	90.4	90.6	89.3	86.8	87.6	88.7	89.3	88.54	0.03	40.3	40.4	40.2	40.3	58.80	58.81	10:28
87.6	88.1	86.5	88.3	88.3	89.0	87.2	90.3	90.4	90.6	89.3	86.8	87.6	88.7	89.3	88.54	0.03	40.2	40.3	40.2	40.3	58.80	58.80	10:29
87.6	88.1	86.5	88.3	88.3	89.0	87.2	90.3	90.4	90.7	89.3	86.8	87.6	88.7	89.3	88.55	0.03	40.2	40.3	40.2	40.2	58.80	58.79	10:30
87.6	88.1	86.5	88.3	88.3	89.0	87.2	90.3	90.4	90.7	89.3	86.8	87.6	88.7	89.3	88.55	0.04	40.2	40.4	40.2	40.2	58.80	58.79	10:31
87.6	88.1	86.5	88.3	88.3	89.0	87.2	90.3	90.4	90.7	89.3	86.8	87.7	88.7	89.3	88.56	0.04	40.3	40.5	40.2	40.3	58.80	58.82	10:32
87.6	88.1	86.5	88.3	88.3	89.0	87.2	90.3	90.4	90.6	89.3	86.8	87.6	88.7	89.3	88.54	0.04	40.2	40.3	40.2	40.2	58.80	58.80	10:33
87.6	88.1	86.5	88.3	88.3	89.0	87.2	90.3	90.4	90.6	89.3	86.8	87.7	88.7	89.3	88.56	0.04	40.2	40.4	40.2	40.2	58.80	58.78	10:34
87.6	88.1	86.5	88.3	88.3	89.0	87.2	90.3	90.4	90.7	89.3	86.8	87.6	88.7	89.3	88.55	0.04	40.3	40.3	40.1	40.2	58.80	58.78	10:35
87.6	88.1	86.5	88.3	88.3	89.0	87.2	90.3	90.4	90.6	89.3	86.8	87.6	88.7	89.3	88.54	0.04	40.3	40.3	40.1	40.2	58.80	58.79	10:36
87.6	88.1	86.5	88.3	88.3	89.0	87.2	90.3	90.4	90.6	89.3	86.8	87.6	88.7	89.3	88.53	0.04	40.2	40.3	40.1	40.2	58.80	58.79	10:37
87.6	88.1	86.5	88.3	88.3	89.0	87.2	90.3	90.4	90.7	89.3	86.8	87.6	88.7	89.3	88.55	0.04	40.3	40.3	40.2	40.2	58.80	58.79	10:38
87.6	88.1	86.5	88.3	88.3	89.0	87.2	90.3	90.4	90.7	89.3	86.8	87.6	88.7	89.3	88.55	0.04	40.2	40.3	40.2	40.2	58.80	58.79	10:39
87.6	88.1	86.5	88.3	88.3	89.0	87.2	90.3	90.4	90.6	89.3	86.8	87.6	88.7	89.3	88.55	0.04	40.2	40.4	40.1	40.2	58.80	58.79	10:40
87.6	88.1	86.5	88.3	88.3	89.0	87.2	90.3	90.4	90.7	89.3	86.8	87.6	88.7	89.3	88.55	0.04	40.3	40.4	40.1	40.2	58.80	58.79	10:41
87.6	88.1	86.5	88.3	88.3	89.0	87.2	90.3	90.4	90.6	89.3	86.8	87.6	88.7	89.3	88.54	0.04	40.2	40.3	40.1	40.2	58.80	58.78	10:42
87.6	88.1	86.5	88.3	88.3	89.0	87.2	90.3	90.4	90.6	89.3	86.8	87.6	88.7	89.3	88.55	0.04	40.2	40.4	40.1	40.2	58.80	58.79	10:43
87.6	88.1	86.5	88.3	88.3	89.0	87.2	90.3	90.4	90.6	89.3	86.8	87.6	88.7	89.3	88.53	0.04	40.3	40.4	40.1	40.2	58.80	58.80	10:44
87.6	88.1	86.5	88.3	88.3	89.0	87.2	90.3	90.4	90.7	89.3	86.8	87.6	88.7	89.3	88.54	0.04	40.2	40.3	40.1	40.2	58.80	58.76	10:45
87.6	88.1	86.5	88.3	88.3	89.0	87.2	90.3	90.4	90.6	89.3	86.8	87.6	88.7	89.3	88.53	0.03	40.3	40.3	40.1	40.2	58.76	58.74	10:46
87.6	88.1	86.5	88.3	88.3	89.0	87.2	90.3	90.4	90.6	89.3	86.8	87.6	88.7	89.3	88.52	0.03	40.3	40.4	40.2	40.3	58.76	58.79	10:47
87.6	88.1	86.5	88.3	88.3	89.0	87.2	90.3	90.4	90.6	89.3	86.8	87.6	88.7	89.3	88.55	0.03	40.2	40.4	40.1	40.2	58.76	58.74	10:48
87.6	88.1	86.5	88.3	88.3	89.0	87.2	90.3	90.4	90.6	89.3	86.8	87.6	88.7	89.3	88.55	0.03	40.1	40.4	40.1	40.2	58.80	58.76	10:49
87.6	88.1	86.5	88.3	88.3	89.0	87.2	90.3	90.4	90.6	89.3	86.8	87.6	88.7	89.3	88.53	0.03	40.1	40.3	40.1	40.2	58.80	58.76	10:50
87.6	88.1	86.5	88.3	88.3	89.0	87.2	90.3	90.4	90.6	89.3	86.8	87.6	88.7	89.3	88.54	0.03	40.2	40.4	40.1	40.2	58.80	58.79	10:51
87.6	88.1	86.5	88.3	88.3	89.0	87.2	90.3	90.4	90.6	89.3	86.8	87.6	88.7	89.3	88.54	0.02	40.2	40.3	40.1	40.2	58.80	58.76	10:52
87.6	88.1	86.5	88.3	88.3	89.0	87.2	90.3	90.4	90.6	89.3	86.8	87.6	88.7	89.3	88.53	0.02	40.3	40.3	40.1	40.2	58.80	58.80	10:53
87.6	88.1	86.5	88.3	88.3	89.0	87.2	90.3	90.4	90.6	89.3	86.8	87.6	88.7	89.3	88.52	0.02	40.3	40.4	40.1	40.3	58.80	58.82	10:54
87.6	88.1	86.5	88.3	88.3	89.0	87.2	90.3	90.4	90.6	89.3	86.8	87.6	88.7	89.3	88.52	0.01	40.2	40.3	40.1	40.2	58.80	58.79	10:55
87.6	88.1	86.5	88.3	88.3	89.0	87.2	90.3	90.4	90.6	89.3	86.8	87.6	88.7	89.3	88.54	0.01	40.3	40.3	40.1	40.2	58.80	58.79	10:56
87.6	88.1	86.5	88.3	88.3	89.0	87.2	90.3	90.4	90.6	89.3	86.8	87.6	88.7	89.3	88.53	0.01	40.2	40.2	40.1	40.2	58.80	58.76	10:57
87.6	88.1	86.5	88.3	88.3	89.0	87.2	90.3	90.4	90.6	89.3	86.8	87.6	88.7	89.3	88.53	0.01	40.2	40.3	40.1	40.2	58.80	58.78	10:58
87.6	88.1	86.5	88.3	88.3	89.0	87.2	90.3	90.4	90.6	89.3	86.8	87.6	88.7	89.3	88.52	0.01	40.3	40.4	40.1	40.3	58.80	58.82	10:59
87.6	88.1	86.5	88.3	88.3	89.0	87.2	90.3	90.4	90.6	89.3	86.8	87.6	88.7	89.3	88.54	0.00	40.2	40.3	40.1	40.2	58.80	58.79	11:00
87.6	88.1	86.5	88.2	88.3	89.0	87.2	90.3	90.4	90.6	89.3	86.8	87.6	88.7	89.3	88.52	0.00	40.2	40.3	40.1	40.2	58.80	58.79	11:01
87.6	88.1	86.5	88.3	88.3	89.0	87.2	90.3	90.4	90.6	89.3	86.8	87.6	88.7	89.3	88.53	-0.00	40.2	40.3	40.1	40.2	58.80	58.76	11:02
87.6	88.1	86.5	88.3	88.3	89.0	87.2	90.3	90.4	90.6	89.3	86.8	87.6	88.7	89.3	88.51	-0.00	40.2	40.4	40.1	40.2	58.80	58.78	11:03
87.6	88.1	86.5	88.3	88.3	89.0	87.2	90.3	90.4	90.6	89.3	86.8	87.6	88.7	89.3	88.51	-0.01	40.2	40.4	40.1	40.2	58.80	58.80	11:04
87.6	88.1	86.5	88.3	88.3	89.0	87.2	90.3	90.4	90.6	89.3	86.8	87.6	88.7	89.3	88.52	-0.01	40.3	40.3	40.1	40.2	58.80	58.79	11:05
87.6	88.1	86.5	88.3	88.3	89.0	87.2	90.3	90.4	90.6	89.3	86.8	87.6	88.7	89.3	88.52	-0.01	40.2	40.4	40.1	40.3	58.80	58.81	11:06
87.6	88.1	86.5	88.2	88.2	88.9	87.2	90.3	90.4	90.6	89.3	86.8	87.6	88.7	89.3	88.50	-0.02	40.2	40.5	40.1	40.3	58.80	58.84	11:07
87.6	88.1	86.5	88.3	88.3	89.0	87.2	90.3	90.4	90.7	89.3	86.8	87.6	88.7	89.3	88.53	-0.02	40.2	40.3	40.1	40.2	58.80	58.79	11:08
87.6	88.1	86.5	88.3	88.3	89.0	87.2	90.3	90.4	90.6	89.3	86.8	87.6	88.7	89.3	88.53	-0.02	40.3	40.4	40.1	40.3	58.80	58.81	11:09
87.6	88.1	86.5	88.2	88.3	89.0	87.2	90.3	90.4	90.6	89.3	86.8	87.6	88.7	89.3	88.51	-0.02	40.2	40.3	40.1	40.2	58.80	58.79	11:10
87.6	88.1	86.5	88.2	88.3	89.0	87.2	90.3	90.4	90.6	89.3	86.8	87.6	88.7	89.3	88.51	-0.03	40.2	40.3	40.0	40.2	58.80	58.76	11:11
87.6	88.1	86.5	88.3	88.3	89.0	87.2	90.3	90.4	90.6	89.3	86.8	87.6	88.7	89.3	88.51	-0.03	40.2	40.3	40.0	40.2	58.80	58.76	11:12
87.6	88.1	86.5	88.2	88.3	89.0	87.2	90.3	90.4	90.6	89.3	86.8	87.6	88.7	89.3	88.50	-0.04	40.2	40.4	40.1	40.2	58.80	58.82	11:13
87.6	88.1	86.5	88.2	88.2	89.0	87.2	90.3	90.4	90.6	89.3	86.8	87.6	88.7	89.3	88.50	-0.04	40.2	40.3	40.1	40.2	58.80	58.78	11:14
87.6	88.1	86.5	88.2	88.2	88.9	87.2	90.2	90.4	90.6	89.3	86.8	87.6	88.6	89.3	88.49	-0.04	40.3	40.5	40.1	40.3	58.80	58.85	11:15
87.6	88.1	86.5	88.2	88.3	89.0	87.2	90.3	90.4	90.6	89.3	86.8	87.6	88.7	89.3	88.51	-0.04	40.2	40.4	40.1	40.2	58.80	58.80	11:16
87.6	88.1	86.5	88.2	88.2	89.0	87.2	90.3	90.4	90.6	89.3	86.8	87.6	88.7	89.3	88.50	-0.05	40.3	40.4	40.1	40.3	58.80	58.82	11:17
87.6	88.1	86.5	88.3	88.3	89.0	87.2	90.3	90.4	90.6	89.3	86.8	87.6	88.7	89.3	88.51	-0.05	40.3	40.4	40.0	40.2	58.80	58.80	11:18
87.6	88.1	86.5	88.2	88.2	88.9	87.2	90.2	90.4	90.6	89.3	86.8	87.6	88.6	89.3	88.49	-0.05	40.2	40.3	40.1	40.2	58.80	58.81	11:19
87.6	88.1	86.5	88.2	88.2	88.9	87.2	90.3	90.4	90.6	89.3	86.8	87.6	88.7	89.3	88.50	-0.05	40.1	40.3	40.1	40.2	58.80	58.77	11:20
87.6	88.0	86.5	88.2	88.2	88.9	87.2	90.3	90.4	90.6	89.3	86.8	87.6	88.6	89.3	88.49	-0.06	40.2	40.3	40.1	40.2	58.80	58.80	11:21
87.6	88.0	86.5	88.2	88.2	89.0	87.2	90.3	90.4	90.6	89.3	86.8	87.6	88.7	89.3	88.50	-0.06	40.3	40.4	40.1	40.2	58.80	58.81	11:22
87.6	88.1	86.5	88.2	88.2	89.0	87.2	90.3	90.4	90.6	89.3	86.8	87.6	88.6	89.3	88.49	-0.06	40.2	40.3	40.1	40.2	58.80	58.78	11:23
87.6	88.0	86.5	88.2	88.2	88.9	87.2	90.2	90.4	90.6	89.3	86.8	87.6	88.6	89.3	88.49	-0.06	40.3	40.2	40.1	40.2	58.80	58.80	11:24
87.6	88.0	86.5	88.2	88.2	88.9	87.2	90.2	90.4	90.6	89.3	86.8	87.6	88.6	89.3	88.49	-0.06	40.1	40.2	40.1	40.1	58.80	58.76	11:25
87.5	88.0	86.5	88.2	88.2	88.9	87.2	90.3	90.4	90.6	89.3	86.7	87.6	88.6	89.2	88.48	-0.07	40.2	40.3	40.1	40.2	58.80	58.77	11:26
87.6	88.0	86.5	88.2	88.2	89.0	87.2	90.3	90.4	90.6	89.3	86.8	87.6	88.7	89.3	88.49	-0.07	40.1	40.4	40.0	40.2	58.80	58.78	11:27

COMMENTS _____

Tested By [signature] Date 3-31-93 Reviewed By [signature] Date 3-31-93

AMPACITY TEST. JOB NUMBER 93-0501. SAMPLE NUMBER 93-0501-06 DATA FILE 4C6606NO.002 03-31-1993 F-21

POSITION 1				POSITION 2				POSITION 3				POSITION AVG			AVG		AMBIENT TEMPERATURE				AMPS		
Trd1	Twh1	Tbk1	Tgr1	Trd2	Twh2	Tbk2	Tgr2	Trd3	Twh3	Tbk3	Tgr3	Tav1	Tav2	Tav3	Twave	SLOPE	Tam1	Tam2	Tam3	Taav	It	I'	TIME
87.6	88.0	86.5	88.2	88.2	88.9	87.2	90.2	90.4	90.6	89.3	86.8	87.6	88.6	89.3	88.49	-0.07	40.2	40.4	40.0	40.2	58.80	58.80	11:28
87.6	88.0	86.5	88.2	88.2	88.9	87.2	90.2	90.4	90.6	89.3	86.7	87.6	88.6	89.2	88.49	-0.07	40.2	40.4	40.1	40.2	58.80	58.82	11:29
87.6	88.0	86.5	88.2	88.2	88.9	87.2	90.2	90.4	90.6	89.3	86.7	87.6	88.6	89.2	88.48	-0.07	40.2	40.3	40.0	40.2	58.80	58.78	11:30
87.5	88.0	86.5	88.2	88.2	88.9	87.2	90.2	90.4	90.6	89.3	86.7	87.6	88.6	89.2	88.48	-0.07	40.3	40.3	40.0	40.2	58.80	58.79	11:31
87.6	88.0	86.5	88.2	88.2	88.9	87.2	90.2	90.4	90.6	89.3	86.7	87.6	88.6	89.2	88.48	-0.07	40.2	40.3	40.0	40.2	58.80	58.78	11:32
87.6	88.1	86.5	88.2	88.2	88.9	87.1	90.3	90.4	90.6	89.3	86.7	87.6	88.6	89.3	88.49	-0.07	40.1	40.3	40.0	40.1	58.80	58.76	11:33
87.6	88.0	86.5	88.2	88.2	88.9	87.2	90.3	90.4	90.6	89.3	86.7	87.6	88.6	89.2	88.49	-0.07	40.1	40.2	40.0	40.1	58.80	58.75	11:34
87.6	88.0	86.5	88.2	88.2	88.9	87.2	90.3	90.4	90.6	89.3	86.7	87.6	88.6	89.2	88.49	-0.07	40.1	40.3	40.0	40.1	58.80	58.75	11:35
87.5	88.0	86.4	88.2	88.2	88.9	87.2	90.2	90.4	90.6	89.3	86.7	87.6	88.6	89.2	88.48	-0.07	40.1	40.2	40.0	40.1	58.80	58.76	11:36
87.6	88.0	86.5	88.2	88.2	88.9	87.2	90.2	90.4	90.6	89.3	86.8	87.6	88.6	89.2	88.49	-0.07	40.3	40.2	40.0	40.2	58.80	58.78	11:37
87.5	88.0	86.4	88.2	88.2	88.9	87.1	90.2	90.4	90.6	89.3	86.7	87.6	88.6	89.2	88.47	-0.07	40.3	40.2	40.0	40.2	58.80	58.78	11:38
87.6	88.0	86.4	88.2	88.2	88.9	87.2	90.2	90.4	90.6	89.3	86.7	87.6	88.6	89.2	88.47	-0.07	40.2	40.2	40.0	40.1	58.80	58.76	11:39
87.6	88.0	86.5	88.2	88.2	88.9	87.2	90.2	90.4	90.6	89.3	86.7	87.6	88.6	89.2	88.49	-0.07	40.1	40.2	40.0	40.1	58.76	58.70	11:40
87.5	88.0	86.4	88.2	88.2	88.9	87.1	90.2	90.4	90.6	89.3	86.7	87.6	88.6	89.2	88.47	-0.07	40.0	40.2	40.0	40.1	58.76	58.69	11:41
87.5	88.0	86.4	88.2	88.2	88.9	87.1	90.2	90.4	90.6	89.2	86.7	87.5	88.6	89.2	88.46	-0.07	40.0	40.3	40.0	40.1	58.76	58.73	11:42
87.5	88.0	86.4	88.2	88.2	88.9	87.1	90.2	90.3	90.6	89.3	86.7	87.6	88.6	89.2	88.46	-0.07	40.1	40.3	40.0	40.1	58.80	58.78	11:43
87.5	88.0	86.4	88.2	88.2	88.9	87.1	90.2	90.3	90.6	89.3	86.7	87.5	88.6	89.2	88.46	-0.08	40.0	40.2	40.0	40.1	58.80	58.74	11:44
87.5	88.0	86.4	88.2	88.2	88.9	87.1	90.2	90.4	90.6	89.3	86.7	87.6	88.6	89.2	88.47	-0.08	40.1	40.2	40.0	40.1	58.80	58.74	11:45
87.5	88.0	86.4	88.2	88.2	88.9	87.1	90.2	90.4	90.6	89.3	86.7	87.6	88.6	89.2	88.47	-0.08	40.1	40.2	40.0	40.1	58.76	58.72	11:46
87.5	88.0	86.4	88.2	88.2	88.9	87.1	90.2	90.4	90.6	89.2	86.7	87.5	88.6	89.2	88.45	-0.08	40.1	40.3	40.0	40.1	58.76	58.73	11:47
87.5	88.0	86.4	88.2	88.2	88.9	87.1	90.2	90.3	90.6	89.2	86.7	87.5	88.6	89.2	88.44	-0.08	40.2	40.2	40.0	40.1	58.76	58.75	11:48
87.5	88.0	86.4	88.2	88.2	88.9	87.1	90.2	90.4	90.6	89.3	86.7	87.6	88.6	89.2	88.46	-0.08	40.1	40.3	40.0	40.1	58.76	58.74	11:49
87.5	88.0	86.4	88.2	88.2	88.9	87.1	90.2	90.3	90.6	89.2	86.7	87.5	88.6	89.2	88.45	-0.08	40.1	40.2	40.0	40.1	58.80	58.75	11:50
87.5	88.0	86.4	88.2	88.2	88.9	87.1	90.2	90.4	90.6	89.2	86.7	87.5	88.6	89.2	88.46	-0.08	40.0	40.3	40.0	40.1	58.80	58.77	11:51
87.5	88.0	86.4	88.2	88.2	88.9	87.1	90.2	90.4	90.6	89.2	86.7	87.6	88.6	89.2	88.46	-0.08	40.0	40.2	40.0	40.0	58.80	58.71	11:52
87.5	88.0	86.4	88.2	88.2	88.9	87.1	90.2	90.4	90.6	89.2	86.7	87.5	88.6	89.2	88.46	-0.08	40.1	40.2	40.0	40.1	58.80	58.74	11:53
87.5	88.0	86.4	88.2	88.2	88.9	87.1	90.2	90.3	90.6	89.3	86.7	87.5	88.6	89.2	88.46	-0.08	40.1	40.2	39.9	40.1	58.80	58.73	11:54
87.5	88.0	86.4	88.2	88.2	88.9	87.1	90.2	90.4	90.6	89.3	86.7	87.5	88.6	89.2	88.46	-0.08	40.1	40.2	39.9	40.1	58.80	58.73	11:55
87.5	88.0	86.4	88.2	88.2	88.9	87.1	90.2	90.4	90.6	89.3	86.7	87.5	88.6	89.2	88.46	-0.08	40.0	40.3	40.0	40.1	58.80	58.74	11:56
87.5	88.0	86.4	88.2	88.2	88.9	87.1	90.2	90.4	90.6	89.3	86.7	87.6	88.6	89.2	88.46	-0.08	40.0	40.4	40.0	40.1	58.80	58.77	11:57
87.5	88.0	86.4	88.2	88.2	88.9	87.1	90.2	90.3	90.6	89.2	86.7	87.5	88.6	89.2	88.45	-0.07	40.0	40.3	40.0	40.1	58.80	58.77	11:58
87.5	88.0	86.4	88.2	88.2	88.9	87.1	90.2	90.3	90.6	89.2	86.7	87.5	88.6	89.2	88.45	-0.07	40.1	40.2	40.0	40.1	58.80	58.76	11:59
87.5	88.0	86.4	88.2	88.2	88.9	87.1	90.2	90.3	90.6	89.2	86.7	87.5	88.6	89.2	88.46	-0.07	40.1	40.2	39.9	40.1	58.80	58.73	12:00
87.5	88.0	86.4	88.2	88.2	88.9	87.1	90.2	90.3	90.6	89.2	86.7	87.5	88.6	89.2	88.44	-0.07	40.1	40.2	40.0	40.1	58.80	58.74	12:01
87.5	88.0	86.4	88.2	88.2	88.9	87.1	90.2	90.3	90.6	89.2	86.7	87.5	88.6	89.2	88.44	-0.07	40.1	40.2	40.0	40.1	58.80	58.75	12:02
87.5	88.0	86.4	88.2	88.2	88.9	87.1	90.2	90.3	90.6	89.2	86.7	87.5	88.6	89.2	88.44	-0.07	40.1	40.2	40.0	40.1	58.80	58.76	12:03
87.5	88.0	86.4	88.2	88.2	88.9	87.1	90.2	90.3	90.6	89.3	86.7	87.5	88.6	89.2	88.45	-0.07	40.1	40.2	40.0	40.1	58.80	58.74	12:04
87.5	88.0	86.4	88.2	88.2	88.9	87.1	90.2	90.3	90.5	89.2	86.7	87.5	88.6	89.2	88.44	-0.07	40.0	40.1	40.0	40.0	58.80	58.71	12:05
87.5	88.0	86.4	88.2	88.2	88.9	87.1	90.2	90.3	90.6	89.2	86.7	87.5	88.6	89.2	88.45	-0.07	40.1	40.2	39.9	40.1	58.80	58.73	12:06
87.5	88.0	86.4	88.2	88.2	88.9	87.1	90.2	90.3	90.5	89.2	86.7	87.5	88.6	89.2	88.44	-0.07	40.0	40.1	40.0	40.0	58.80	58.72	12:07
87.5	88.0	86.4	88.2	88.2	88.9	87.1	90.2	90.3	90.6	89.2	86.7	87.5	88.6	89.2	88.44	-0.07	40.0	40.3	40.0	40.1	58.80	58.75	12:08
87.5	88.0	86.4	88.2	88.2	88.9	87.1	90.2	90.3	90.6	89.2	86.7	87.5	88.6	89.2	88.43	-0.07	40.1	40.2	40.0	40.1	58.80	58.76	12:09
87.5	88.0	86.4	88.2	88.2	88.9	87.1	90.2	90.3	90.5	89.2	86.7	87.5	88.6	89.2	88.43	-0.07	40.0	40.3	39.9	40.1	58.80	58.74	12:10
87.5	88.0	86.4	88.1	88.2	88.9	87.1	90.2	90.3	90.5	89.2	86.7	87.5	88.6	89.2	88.43	-0.07	40.1	40.4	40.0	40.2	58.80	58.80	12:11
87.5	88.0	86.4	88.1	88.2	88.9	87.1	90.2	90.3	90.5	89.2	86.7	87.5	88.6	89.2	88.42	-0.07	40.0	40.3	40.0	40.1	58.80	58.76	12:12
87.5	88.0	86.4	88.2	88.2	88.9	87.1	90.2	90.3	90.5	89.2	86.7	87.5	88.6	89.2	88.43	-0.07	40.1	40.3	40.0	40.1	58.80	58.76	12:13
87.5	88.0	86.4	88.1	88.1	88.9	87.1	90.2	90.3	90.5	89.2	86.7	87.5	88.6	89.2	88.41	-0.07	40.2	40.2	40.0	40.1	58.80	58.79	12:14
87.5	87.9	86.4	88.1	88.1	88.9	87.1	90.2	90.3	90.5	89.2	86.7	87.5	88.6	89.2	88.40	-0.08	40.1	40.2	39.9	40.1	58.80	58.76	12:15
87.5	88.0	86.4	88.2	88.2	88.9	87.1	90.2	90.3	90.5	89.2	86.7	87.5	88.6	89.2	88.42	-0.08	40.0	40.1	40.0	40.0	58.80	58.73	12:16
87.5	88.0	86.4	88.1	88.2	88.9	87.1	90.2	90.3	90.5	89.2	86.7	87.5	88.6	89.2	88.42	-0.08	40.0	40.2	40.0	40.1	58.80	58.76	12:17
87.5	88.0	86.4	88.2	88.2	88.9	87.1	90.2	90.3	90.5	89.2	86.7	87.5	88.6	89.2	88.42	-0.08	40.1	40.2	40.0	40.1	58.80	58.76	12:18
87.5	87.9	86.4	88.1	88.1	88.9	87.1	90.2	90.3	90.5	89.2	86.7	87.5	88.6	89.2	88.41	-0.08	40.1	40.2	40.0	40.1	58.80	58.78	12:19
87.5	88.0	86.4	88.2	88.2	88.9	87.1	90.2	90.3	90.5	89.2	86.7	87.5	88.6	89.2	88.43	-0.08	40.1	40.1	39.9	40.0	58.80	58.74	12:20
87.5	88.0	86.4	88.2	88.2	88.9	87.1	90.2	90.3	90.5	89.2	86.7	87.5	88.6	89.2	88.42	-0.08	40.0	40.2	40.0	40.1	58.80	58.76	12:21
87.5	88.0	86.4	88.2	88.2	88.9	87.1	90.2	90.3	90.5	89.2	86.7	87.5	88.6	89.2	88.42	-0.08	40.0	40.1	40.0	40.0	58.80	58.73	12:22
87.5	88.0	86.4	88.2	88.2	88.9	87.1	90.2	90.3	90.5	89.2	86.7	87.5	88.6	89.2	88.42	-0.08	40.0	40.2	40.0	40.1	58.80	58.76	12:23
87.5	88.0	86.4	88.2	88.2	88.9	87.1	90.2	90.3	90.5	89.2	86.7	87.5	88.6	89.2	88.42	-0.08	40.0	40.4	40.0	40.1	58.80	58.79	12:24
87.5	88.0	86.4	88.2	88.2	88.9	87.1	90.2	90.3	90.5	89.2	86.7	87.5	88.6	89.2	88.41	-0.08	40.0	40.3	40.0	40.1	58.80	58.77	12:25
87.5	88.0	86.4	88.2	88.1	88.9	87.1	90.2	90.3	90.5	89.2	86.7	87.5	88.6	89.2	88.40	-0.08	40.0	40.3	40.0	40.1	58.80	58.80	12:26
87.5	88.0	86.4	88.1	88.2	88.9	87.1	90.2	90.3	90.5	89.2	86.7	87.5	88.6	89.2	88.41	-0.08	40.0	40.3	40.0	40.1	58.80	58.78	12:27

COMMENTS

Tested By C L Rutledge Date 3-31-93 Reviewed By Frank A. Winey Date 3-31-93

POSITION 1				POSITION 2				POSITION 3				POSITION AVG			AVG		AMBIENT TEMPERATURE				AMPS		
Trd1	Twh1	Tbk1	Tgr1	Trd2	Twh2	Tbk2	Tgr2	Trd3	Twh3	Tbk3	Tgr3	Tav1	Tav2	Tav3	Twave	SLOPE	Tam1	Tam2	Tam3	Taav	It	I'	TIME
88.1	88.8	87.6	88.6	87.8	88.7	88.5	89.6	88.0	89.9	89.1	86.7	88.3	88.6	88.4	88.44	0.00	40.2	40.2	39.8	40.1	59.80	60.09	11:57
88.0	88.8	87.5	88.6	87.7	88.7	88.5	89.5	88.0	89.9	89.1	86.7	88.2	88.6	88.4	88.42	-0.00	40.3	40.4	39.8	40.2	59.80	60.13	11:58
88.0	88.8	87.5	88.6	87.7	88.7	88.5	89.5	88.0	89.9	89.1	86.7	88.2	88.6	88.4	88.41	-0.00	40.2	40.5	39.8	40.2	59.84	60.19	11:59
88.1	88.8	87.5	88.6	87.7	88.7	88.5	89.6	88.0	89.9	89.1	86.7	88.2	88.6	88.4	88.42	-0.00	40.3	40.5	39.8	40.2	59.80	60.13	12:00
88.0	88.8	87.6	88.6	87.7	88.7	88.5	89.5	88.0	89.9	89.1	86.7	88.2	88.6	88.4	88.42	-0.00	40.2	40.4	39.8	40.2	59.80	60.13	12:01
88.1	88.8	87.6	88.6	87.7	88.7	88.5	89.5	88.0	89.9	89.1	86.7	88.2	88.6	88.4	88.42	-0.00	40.3	40.5	39.8	40.2	59.80	60.17	12:02
88.0	88.8	87.5	88.6	87.7	88.7	88.5	89.5	87.9	89.9	89.1	86.7	88.2	88.6	88.4	88.40	-0.01	40.2	40.4	39.8	40.1	59.80	60.13	12:03
88.0	88.8	87.5	88.6	87.7	88.7	88.5	89.5	88.0	89.9	89.1	86.7	88.2	88.6	88.4	88.41	-0.01	40.3	40.3	39.8	40.1	59.80	60.13	12:04
88.0	88.8	87.5	88.6	87.7	88.7	88.5	89.5	87.9	89.9	89.1	86.7	88.2	88.6	88.4	88.40	-0.01	40.2	40.3	39.8	40.1	59.80	60.13	12:05
88.0	88.8	87.5	88.6	87.7	88.7	88.5	89.5	88.0	89.9	89.1	86.7	88.2	88.6	88.4	88.40	-0.01	40.2	40.4	39.8	40.2	59.80	60.14	12:06
88.0	88.8	87.5	88.6	87.7	88.7	88.5	89.5	88.0	89.9	89.1	86.7	88.2	88.6	88.4	88.40	-0.02	40.2	40.4	39.8	40.1	59.80	60.14	12:07
88.0	88.8	87.5	88.6	87.7	88.7	88.5	89.5	88.0	89.9	89.1	86.7	88.2	88.6	88.4	88.40	-0.02	40.2	40.5	39.9	40.2	60.12	60.51	12:08
88.1	88.8	87.6	88.6	87.7	88.7	88.5	89.5	88.0	89.9	89.1	86.7	88.2	88.6	88.4	88.43	-0.02	40.3	40.6	39.9	40.2	60.00	60.39	12:09
88.1	88.8	87.6	88.6	87.7	88.7	88.5	89.6	88.0	89.9	89.1	86.7	88.3	88.6	88.4	88.45	-0.02	40.2	40.6	39.8	40.2	60.00	60.35	12:10
88.1	88.8	87.6	88.6	87.8	88.7	88.5	89.6	88.0	89.9	89.1	86.8	88.3	88.6	88.5	88.46	-0.01	40.3	40.5	39.8	40.2	60.00	60.35	12:11
88.1	88.8	87.6	88.6	87.8	88.7	88.5	89.6	88.0	90.0	89.1	86.8	88.3	88.6	88.5	88.47	-0.01	40.2	40.4	39.8	40.2	59.88	60.19	12:12
88.1	88.8	87.6	88.6	87.8	88.7	88.5	89.6	88.0	89.9	89.1	86.7	88.3	88.6	88.4	88.45	-0.01	40.3	40.4	39.8	40.2	59.88	60.21	12:13
88.1	88.8	87.6	88.6	87.8	88.7	88.5	89.6	88.0	89.9	89.1	86.8	88.3	88.6	88.5	88.46	-0.00	40.4	40.5	39.9	40.3	59.92	60.30	12:14
88.1	88.8	87.6	88.6	87.8	88.7	88.6	89.6	88.0	90.0	89.1	86.8	88.3	88.7	88.5	88.47	0.00	40.3	40.5	39.9	40.2	59.88	60.23	12:15
88.1	88.8	87.6	88.6	87.8	88.7	88.6	89.6	88.0	90.0	89.1	86.8	88.3	88.7	88.5	88.47	0.01	40.3	40.6	39.8	40.3	59.92	60.29	12:16
88.1	88.8	87.6	88.6	87.8	88.7	88.5	89.6	88.0	89.9	89.1	86.8	88.3	88.6	88.5	88.46	0.01	40.3	40.5	39.9	40.2	59.88	60.24	12:17
88.1	88.8	87.6	88.6	87.8	88.7	88.5	89.6	88.0	90.0	89.1	86.8	88.3	88.6	88.5	88.47	0.01	40.3	40.4	39.9	40.2	59.88	60.21	12:18
88.1	88.8	87.6	88.6	87.8	88.7	88.6	89.6	88.0	90.0	89.1	86.8	88.3	88.7	88.5	88.47	0.02	40.3	40.6	39.8	40.2	59.88	60.23	12:19
88.1	88.8	87.6	88.6	87.8	88.7	88.5	89.6	88.0	90.0	89.1	86.8	88.3	88.6	88.5	88.46	0.02	40.3	40.4	39.8	40.2	59.88	60.19	12:20
88.1	88.8	87.6	88.6	87.8	88.7	88.5	89.6	88.0	90.0	89.1	86.8	88.3	88.7	88.5	88.47	0.02	40.3	40.3	39.8	40.2	59.88	60.19	12:21
88.1	88.8	87.6	88.6	87.8	88.7	88.5	89.6	88.0	90.0	89.2	86.8	88.3	88.7	88.5	88.47	0.03	40.3	40.5	39.9	40.2	59.88	60.22	12:22
88.1	88.8	87.6	88.6	87.8	88.7	88.5	89.6	88.0	90.0	89.1	86.8	88.3	88.7	88.5	88.48	0.03	40.3	40.3	39.8	40.2	59.88	60.19	12:23
88.1	88.8	87.6	88.6	87.8	88.7	88.6	89.6	88.0	90.0	89.2	86.8	88.3	88.7	88.5	88.48	0.04	40.3	40.4	39.8	40.2	59.88	60.20	12:24
88.1	88.8	87.6	88.6	87.8	88.7	88.6	89.6	88.0	90.0	89.2	86.8	88.3	88.7	88.5	88.49	0.04	40.4	40.4	39.8	40.2	59.88	60.21	12:25
88.1	88.8	87.6	88.6	87.8	88.7	88.6	89.6	88.0	90.0	89.1	86.8	88.3	88.7	88.5	88.48	0.04	40.2	40.3	39.9	40.1	59.88	60.18	12:26
88.1	88.8	87.6	88.7	87.8	88.7	88.6	89.6	88.0	90.0	89.2	86.8	88.3	88.7	88.5	88.49	0.05	40.3	40.4	39.9	40.2	59.88	60.20	12:27
88.1	88.8	87.6	88.6	87.8	88.7	88.6	89.6	88.0	90.0	89.1	86.8	88.3	88.7	88.5	88.48	0.05	40.3	40.4	39.9	40.2	59.88	60.20	12:28
88.1	88.8	87.6	88.6	87.8	88.7	88.6	89.6	88.0	90.0	89.1	86.8	88.3	88.7	88.5	88.48	0.05	40.3	40.4	39.9	40.2	59.88	60.19	12:29
88.1	88.8	87.6	88.7	87.8	88.7	88.6	89.6	88.0	90.0	89.2	86.8	88.3	88.7	88.5	88.49	0.06	40.3	40.4	39.9	40.2	59.88	60.21	12:30
88.1	88.8	87.6	88.6	87.8	88.7	88.6	89.6	88.0	90.0	89.2	86.8	88.3	88.7	88.5	88.49	0.06	40.3	40.4	39.8	40.2	59.88	60.18	12:31
88.1	88.8	87.6	88.7	87.8	88.7	88.6	89.6	88.0	90.0	89.2	86.8	88.3	88.7	88.5	88.49	0.07	40.3	40.3	39.9	40.2	59.88	60.19	12:32
88.1	88.8	87.6	88.7	87.8	88.7	88.5	89.6	88.0	90.0	89.2	86.8	88.3	88.7	88.5	88.48	0.07	40.3	40.3	39.9	40.2	59.88	60.19	12:33
88.1	88.8	87.6	88.7	87.8	88.7	88.6	89.6	88.1	90.0	89.2	86.8	88.3	88.7	88.5	88.49	0.07	40.3	40.3	39.9	40.2	59.88	60.18	12:34
88.1	88.8	87.6	88.7	87.8	88.7	88.6	89.6	88.1	90.0	89.2	86.8	88.3	88.7	88.5	88.49	0.07	40.3	40.4	39.9	40.2	59.88	60.20	12:35
88.1	88.8	87.6	88.7	87.8	88.7	88.5	89.6	88.0	90.0	89.2	86.8	88.3	88.7	88.5	88.49	0.08	40.3	40.3	39.8	40.1	59.88	60.17	12:36
88.1	88.8	87.6	88.7	87.8	88.7	88.6	89.6	88.1	90.0	89.2	86.8	88.3	88.7	88.5	88.50	0.08	40.3	40.3	39.8	40.1	59.88	60.16	12:37
88.1	88.8	87.6	88.7	87.8	88.7	88.6	89.6	88.1	90.0	89.2	86.8	88.3	88.7	88.5	88.50	0.08	40.2	40.4	39.9	40.1	59.92	60.22	12:38
88.2	88.9	87.6	88.7	87.8	88.8	88.6	89.6	88.1	90.0	89.2	86.8	88.3	88.7	88.5	88.51	0.09	40.3	40.4	39.9	40.2	59.92	60.24	12:39
88.1	88.9	87.6	88.7	87.8	88.8	88.6	89.6	88.1	90.0	89.2	86.8	88.3	88.7	88.5	88.50	0.09	40.3	40.3	39.8	40.1	59.88	60.17	12:40
88.1	88.9	87.6	88.7	87.8	88.8	88.6	89.6	88.1	90.0	89.2	86.8	88.3	88.7	88.5	88.51	0.09	40.3	40.4	39.8	40.2	59.88	60.17	12:41
88.1	88.9	87.6	88.7	87.8	88.8	88.6	89.6	88.1	90.0	89.2	86.8	88.3	88.7	88.5	88.51	0.10	40.3	40.4	39.9	40.2	59.92	60.24	12:42
88.1	88.9	87.6	88.7	87.8	88.8	88.6	89.6	88.1	90.0	89.2	86.8	88.3	88.7	88.5	88.51	0.10	40.3	40.3	39.8	40.1	59.92	60.21	12:43
88.1	88.8	87.6	88.7	87.8	88.7	88.6	89.6	88.1	90.0	89.2	86.8	88.3	88.7	88.5	88.49	0.10	40.3	40.5	39.9	40.2	59.88	60.21	12:44
88.1	88.9	87.6	88.7	87.8	88.8	88.6	89.6	88.1	90.0	89.2	86.8	88.3	88.7	88.5	88.51	0.10	40.3	40.5	39.9	40.2	59.92	60.24	12:45
88.1	88.9	87.6	88.7	87.8	88.8	88.6	89.6	88.1	90.0	89.2	86.8	88.3	88.7	88.5	88.51	0.11	40.3	40.5	39.9	40.2	59.88	60.22	12:46
88.1	88.9	87.6	88.7	87.8	88.8	88.6	89.6	88.1	90.0	89.2	86.8	88.3	88.7	88.5	88.51	0.11	40.3	40.6	39.9	40.3	59.92	60.28	12:47
88.2	88.9	87.6	88.7	87.8	88.8	88.6	89.6	88.1	90.0	89.2	86.8	88.3	88.7	88.5	88.52	0.11	40.3	40.4	39.9	40.2	59.88	60.19	12:48
88.1	88.9	87.6	88.7	87.8	88.8	88.6	89.6	88.1	90.0	89.2	86.8	88.3	88.7	88.5	88.51	0.11	40.3	40.5	39.9	40.3	59.88	60.24	12:49
88.1	88.9	87.6	88.7	87.8	88.8	88.6	89.6	88.1	90.0	89.2	86.8	88.3	88.7	88.5	88.51	0.11	40.3	40.5	39.8	40.2	59.88	60.21	12:50
88.2	88.9	87.6	88.7	87.8	88.8	88.6	89.6	88.1	90.0	89.2	86.8	88.3	88.7	88.5	88.52	0.12	40.2	40.5	39.9	40.2	59.88	60.21	12:51
88.1	88.9	87.6	88.7	87.8	88.8	88.6	89.6	88.1	90.0	89.2	86.8	88.3	88.7	88.5	88.51	0.12	40.3	40.5	39.8	40.2	59.88	60.20	12:52
88.2	88.9	87.6	88.7	87.8	88.8	88.6	89.6	88.1	90.0	89.2	86.8	88.3	88.7	88.5	88.51	0.12	40.4	40.5	39.9	40.3	59.88	60.24	12:53
88.2	88.9	87.6	88.7	87.8	88.8	88.6	89.6	88.1	90.0	89.2	86.8	88.3	88.7	88.5	88.51	0.12	40.3	40.6	39.9	40.3	59.88	60.23	12:54
88.2	88.9	87.6	88.7	87.8	88.8	88.6	89.6	88.1	90.0	89.2	86.8	88.3	88.7	88.5	88.52	0.12	40.3	40.5	39.8	40.2	59.88	60.20	12:55
88.2	88.9	87.7	88.7	87.8	88.8	88.6	89.6	88.1	90.0	89.2	86.8	88.3	88.7	88.5	88.53	0.12	40.3	40.5	39.8	40.2	59.88	60.18	12:56

COMMENTS _____

Tested By C L Lutledge Date 3-30-93 Reviewed By Frank A. Deviney Date 3-30-93

POSITION 1				POSITION 2				POSITION 3				POSITION AVG			AVG		AMBIENT TEMPERATURE				AMPS		
Trd1	Twh1	Tbk1	Tgr1	Trd2	Twh2	Tbk2	Tgr2	Trd3	Twh3	Tbk3	Tgr3	Tav1	Tav2	Tav3	Twave	SLOPE	Tam1	Tam2	Tam3	Taav	It	I'	TIME
88.2	88.9	87.7	88.7	87.8	88.8	88.6	89.6	88.1	90.0	89.2	86.8	88.4	88.7	88.5	88.54	0.12	40.3	40.4	39.8	40.2	59.88	60.16	12:57
88.2	88.9	87.7	88.7	87.8	88.8	88.6	89.6	88.1	90.0	89.2	86.8	88.4	88.7	88.5	88.53	0.12	40.3	40.5	39.9	40.2	59.88	60.21	12:58
88.2	88.9	87.6	88.7	87.8	88.8	88.6	89.6	88.1	90.0	89.2	86.8	88.3	88.7	88.5	88.52	0.12	40.3	40.5	39.8	40.2	59.88	60.20	12:59
88.2	88.9	87.7	88.7	87.8	88.8	88.6	89.6	88.1	90.0	89.2	86.8	88.4	88.7	88.5	88.53	0.12	40.3	40.4	39.9	40.2	59.88	60.18	13:00
88.2	88.9	87.7	88.7	87.8	88.8	88.6	89.7	88.1	90.0	89.2	86.8	88.4	88.7	88.5	88.54	0.12	40.3	40.4	39.9	40.2	59.88	60.17	13:01
88.2	88.9	87.7	88.7	87.8	88.8	88.6	89.6	88.1	90.0	89.2	86.8	88.4	88.7	88.5	88.54	0.12	40.3	40.3	39.8	40.2	59.88	60.16	13:02
88.2	88.9	87.7	88.7	87.8	88.8	88.6	89.6	88.1	90.0	89.2	86.8	88.3	88.7	88.5	88.52	0.11	40.2	40.4	39.9	40.2	59.88	60.17	13:03
88.2	88.9	87.7	88.7	87.8	88.8	88.6	89.6	88.1	90.0	89.2	86.8	88.4	88.7	88.5	88.53	0.11	40.3	40.4	39.9	40.2	59.88	60.18	13:04
88.2	88.9	87.7	88.7	87.8	88.8	88.6	89.7	88.1	90.0	89.2	86.8	88.4	88.7	88.5	88.54	0.10	40.3	40.4	39.9	40.2	59.88	60.18	13:05
88.2	88.9	87.6	88.7	87.8	88.8	88.6	89.6	88.1	90.0	89.2	86.8	88.3	88.7	88.5	88.52	0.10	40.3	40.5	39.8	40.2	59.88	60.19	13:06
88.2	88.9	87.7	88.7	87.8	88.8	88.6	89.7	88.1	90.0	89.2	86.8	88.4	88.7	88.5	88.54	0.09	40.3	40.5	39.9	40.2	59.88	60.19	13:07
88.2	88.9	87.7	88.7	87.8	88.8	88.6	89.6	88.1	90.0	89.2	86.8	88.4	88.7	88.5	88.53	0.09	40.3	40.4	39.9	40.2	59.88	60.19	13:08
88.2	88.9	87.7	88.7	87.8	88.8	88.6	89.6	88.1	90.1	89.2	86.8	88.3	88.7	88.6	88.53	0.08	40.3	40.5	39.9	40.2	59.88	60.22	13:09
88.2	88.9	87.7	88.7	87.8	88.8	88.6	89.6	88.1	90.0	89.2	86.8	88.4	88.7	88.5	88.55	0.08	40.3	40.5	39.9	40.2	59.88	60.21	13:10
88.2	88.9	87.7	88.7	87.8	88.8	88.6	89.6	88.1	90.0	89.2	86.8	88.4	88.7	88.5	88.54	0.08	40.3	40.3	39.9	40.1	59.88	60.15	13:11
88.2	88.9	87.7	88.7	87.8	88.8	88.6	89.6	88.1	90.0	89.2	86.8	88.4	88.7	88.6	88.55	0.08	40.3	40.4	39.8	40.2	59.88	60.17	13:12
88.2	88.9	87.7	88.7	87.8	88.8	88.6	89.6	88.1	90.0	89.2	86.8	88.4	88.7	88.5	88.54	0.08	40.2	40.4	39.8	40.2	59.88	60.16	13:13
88.2	88.9	87.7	88.7	87.8	88.8	88.6	89.7	88.1	90.0	89.2	86.8	88.4	88.7	88.5	88.55	0.08	40.3	40.5	39.9	40.2	59.88	60.19	13:14
88.2	88.9	87.7	88.7	87.8	88.8	88.6	89.6	88.1	90.0	89.2	86.8	88.4	88.7	88.6	88.55	0.08	40.3	40.5	39.8	40.2	59.88	60.20	13:15
88.2	88.9	87.7	88.7	87.8	88.8	88.6	89.7	88.1	90.1	89.2	86.9	88.4	88.7	88.6	88.56	0.08	40.3	40.3	39.8	40.1	59.88	60.13	13:16
88.2	88.9	87.7	88.7	87.8	88.8	88.6	89.6	88.1	90.1	89.2	86.8	88.4	88.7	88.5	88.54	0.08	40.3	40.3	39.8	40.1	59.88	60.14	13:17
88.2	88.9	87.7	88.7	87.8	88.8	88.6	89.7	88.1	90.1	89.2	86.9	88.4	88.7	88.6	88.56	0.08	40.3	40.3	39.8	40.1	59.92	60.16	13:18
88.2	88.9	87.7	88.7	87.8	88.8	88.6	89.6	88.1	90.1	89.2	86.9	88.4	88.7	88.6	88.55	0.08	40.2	40.4	39.9	40.2	59.88	60.16	13:19
88.2	88.9	87.7	88.7	87.8	88.8	88.6	89.6	88.1	90.1	89.2	86.9	88.4	88.7	88.6	88.55	0.08	40.3	40.3	39.8	40.1	59.88	60.13	13:20
88.2	88.9	87.7	88.7	87.8	88.8	88.6	89.7	88.1	90.1	89.2	86.9	88.4	88.7	88.6	88.56	0.08	40.3	40.3	39.8	40.1	59.88	60.13	13:21
88.2	88.9	87.7	88.7	87.8	88.8	88.6	89.7	88.1	90.1	89.2	86.8	88.4	88.7	88.6	88.56	0.08	40.3	40.3	39.8	40.1	59.88	60.13	13:22
88.2	88.9	87.7	88.7	87.8	88.8	88.6	89.7	88.1	90.1	89.2	86.9	88.4	88.7	88.6	88.55	0.08	40.2	40.2	39.8	40.1	59.88	60.11	13:23
88.2	88.9	87.7	88.7	87.8	88.8	88.6	89.6	88.1	90.0	89.2	86.8	88.4	88.7	88.5	88.54	0.08	40.3	40.3	39.8	40.1	59.88	60.14	13:24
88.2	88.9	87.7	88.7	87.8	88.8	88.6	89.6	88.1	90.0	89.2	86.8	88.4	88.7	88.5	88.54	0.08	40.3	40.3	39.8	40.1	59.88	60.13	13:25
88.2	88.9	87.7	88.7	87.8	88.8	88.6	89.7	88.1	90.1	89.2	86.9	88.4	88.7	88.6	88.56	0.08	40.2	40.3	39.8	40.1	59.88	60.10	13:26
88.2	88.9	87.7	88.7	87.8	88.8	88.6	89.7	88.1	90.0	89.2	86.8	88.4	88.7	88.6	88.56	0.08	40.3	40.3	39.8	40.1	59.88	60.11	13:27
88.2	88.9	87.7	88.7	87.8	88.8	88.6	89.6	88.1	90.0	89.2	86.8	88.4	88.7	88.5	88.54	0.07	40.2	40.2	39.8	40.1	59.88	60.11	13:28
88.2	88.9	87.7	88.7	87.8	88.8	88.6	89.7	88.1	90.1	89.2	86.9	88.4	88.7	88.6	88.55	0.07	40.3	40.2	39.8	40.1	59.88	60.12	13:29
88.2	88.9	87.7	88.8	87.9	88.8	88.6	89.7	88.1	90.1	89.2	86.9	88.4	88.7	88.6	88.57	0.07	40.2	40.2	39.8	40.1	59.88	60.09	13:30
88.2	88.9	87.7	88.8	87.9	88.8	88.6	89.7	88.1	90.1	89.3	86.9	88.4	88.7	88.6	88.57	0.07	40.3	40.2	39.8	40.1	59.88	60.10	13:31
88.2	88.9	87.7	88.7	87.9	88.8	88.6	89.7	88.1	90.1	89.3	86.9	88.4	88.7	88.6	88.57	0.07	40.2	40.3	39.8	40.1	59.88	60.12	13:32
88.2	88.9	87.7	88.7	87.8	88.8	88.6	89.7	88.1	90.1	89.2	86.8	88.4	88.7	88.6	88.56	0.07	40.3	40.3	39.8	40.1	59.88	60.12	13:33
88.2	88.9	87.7	88.7	87.9	88.8	88.6	89.7	88.1	90.1	89.2	86.9	88.4	88.7	88.6	88.58	0.07	40.2	40.3	39.7	40.1	59.88	60.09	13:34
88.2	88.9	87.7	88.7	87.8	88.8	88.6	89.7	88.1	90.1	89.2	86.8	88.4	88.7	88.6	88.56	0.07	40.2	40.3	39.8	40.1	59.88	60.12	13:35
88.2	88.9	87.7	88.8	87.9	88.8	88.6	89.7	88.1	90.1	89.2	86.9	88.4	88.7	88.6	88.58	0.07	40.2	40.2	39.8	40.1	59.88	60.09	13:36
88.2	89.0	87.7	88.8	87.9	88.8	88.7	89.7	88.1	90.1	89.2	86.8	88.4	88.8	88.6	88.58	0.07	40.2	40.3	39.8	40.1	59.88	60.11	13:37
88.2	88.9	87.7	88.7	87.9	88.8	88.6	89.7	88.1	90.1	89.2	86.9	88.4	88.7	88.6	88.57	0.07	40.3	40.3	39.8	40.1	59.88	60.14	13:38
88.2	88.9	87.7	88.7	87.8	88.8	88.6	89.7	88.1	90.1	89.2	86.9	88.4	88.7	88.6	88.56	0.07	40.3	40.3	39.8	40.1	59.88	60.12	13:39
88.2	89.0	87.7	88.8	87.9	88.8	88.7	89.7	88.1	90.1	89.3	86.9	88.4	88.8	88.6	88.58	0.07	40.3	40.3	39.8	40.1	59.88	60.13	13:40
88.2	88.9	87.7	88.8	87.9	88.8	88.6	89.7	88.1	90.1	89.2	86.9	88.4	88.7	88.6	88.57	0.07	40.3	40.3	39.8	40.1	59.88	60.12	13:41
88.2	89.0	87.7	88.8	87.9	88.8	88.6	89.7	88.1	90.1	89.2	86.9	88.4	88.8	88.6	88.58	0.07	40.2	40.2	39.8	40.1	59.88	60.09	13:42
88.2	88.9	87.7	88.7	87.8	88.8	88.6	89.6	88.1	90.1	89.2	86.9	88.4	88.7	88.6	88.56	0.07	40.3	40.3	39.8	40.1	59.88	60.14	13:43
88.2	88.9	87.7	88.7	87.8	88.8	88.6	89.6	88.1	90.1	89.2	86.9	88.4	88.7	88.6	88.56	0.07	40.2	40.3	39.8	40.1	59.88	60.12	13:44
88.2	88.9	87.7	88.7	87.9	88.8	88.6	89.7	88.1	90.1	89.2	86.9	88.4	88.7	88.6	88.57	0.07	40.3	40.3	39.8	40.1	59.88	60.13	13:45
88.2	89.0	87.7	88.7	87.9	88.8	88.6	89.7	88.1	90.1	89.2	86.9	88.4	88.7	88.6	88.58	0.07	40.2	40.3	39.8	40.1	59.88	60.10	13:46
88.2	88.9	87.7	88.8	87.9	88.8	88.6	89.7	88.1	90.1	89.2	86.9	88.4	88.7	88.6	88.57	0.07	40.3	40.2	39.8	40.1	59.88	60.13	13:47
88.2	88.9	87.7	88.7	87.9	88.8	88.6	89.7	88.1	90.1	89.2	86.9	88.4	88.7	88.6	88.57	0.07	40.3	40.3	39.9	40.2	59.88	60.15	13:48
88.2	88.9	87.7	88.8	87.9	88.8	88.6	89.7	88.1	90.1	89.2	86.9	88.4	88.7	88.6	88.58	0.06	40.3	40.2	39.9	40.1	59.88	60.11	13:49
88.2	88.9	87.7	88.8	87.9	88.8	88.6	89.7	88.1	90.1	89.2	86.9	88.4	88.7	88.6	88.58	0.06	40.3	40.2	39.8	40.1	59.88	60.11	13:50
88.2	88.9	87.7	88.7	87.9	88.8	88.6	89.7	88.1	90.1	89.3	86.9	88.4	88.7	88.6	88.58	0.06	40.3	40.2	39.8	40.1	59.88	60.11	13:51
88.2	89.0	87.7	88.8	87.9	88.8	88.6	89.7	88.1	90.1	89.3	86.9	88.4	88.8	88.6	88.59	0.06	40.3	40.3	39.8	40.1	59.88	60.13	13:52
88.2	88.9	87.7	88.7	87.8	88.8	88.6	89.7	88.1	90.1	89.2	86.9	88.4	88.7	88.6	88.58	0.06	40.3	40.4	39.9	40.2	59.92	60.20	13:53
88.2	89.0	87.7	88.8	87.9	88.8	88.6	89.7	88.1	90.1	89.2	86.9	88.4	88.7	88.6	88.57	0.06	40.3	40.4	39.8	40.2	59.88	60.15	13:54
88.2	89.0	87.7	88.7	87.9	88.8	88.6	89.7	88.1	90.1	89.3	86.9	88.4	88.8	88.6	88.59	0.06	40.4	40.4	39.8	40.2	59.88	60.16	13:55
88.2	88.9	87.7	88.8	87.9	88.8	88.6	89.7	88.1	90.1	89.2	86.9	88.4	88.7	88.6	88.58	0.06	40.3	40.4	39.8	40.2	59.88	60.15	13:56

COMMENTS _____

Tested By C L Lutledge Date 3-30-93 Reviewed By Frank A. Denney Date 3-30-93

POSITION 1				POSITION 2				POSITION 3				POSITION AVG			AVG		AMBIENT TEMPERATURE				AMPS		
Trd1	Twh1	Tbk1	Tgr1	Trd2	Twh2	Tbk2	Tgr2	Trd3	Twh3	Tbk3	Tgr3	Tav1	Tav2	Tav3	Twave	SLOPE	Tam1	Tam2	Tam3	Taav	It	I'	TIME
88.2	88.9	87.7	88.8	87.9	88.8	88.6	89.7	88.1	90.1	89.2	86.9	88.4	88.8	88.6	88.58	0.06	40.3	40.5	39.8	40.2	59.88	60.18	13:57
88.2	88.9	87.7	88.7	87.9	88.8	88.6	89.7	88.1	90.1	89.2	86.9	88.4	88.7	88.6	88.57	0.06	40.4	40.5	39.8	40.3	59.88	60.21	13:58
88.2	88.9	87.7	88.8	87.9	88.8	88.6	89.7	88.1	90.1	89.2	86.9	88.4	88.7	88.6	88.57	0.05	40.4	40.5	39.9	40.3	59.88	60.22	13:59
88.2	88.9	87.7	88.7	87.8	88.8	88.7	89.7	88.1	90.1	89.2	86.9	88.4	88.7	88.6	88.57	0.05	40.4	40.4	39.9	40.3	59.88	60.19	14:00
88.2	88.9	87.7	88.8	87.9	88.8	88.6	89.7	88.1	90.1	89.2	86.9	88.4	88.7	88.6	88.58	0.05	40.3	40.6	39.8	40.3	59.88	60.22	14:01
88.2	88.9	87.7	88.7	87.8	88.8	88.6	89.7	88.1	90.1	89.2	86.9	88.4	88.7	88.6	88.57	0.05	40.4	40.4	39.8	40.2	59.88	60.16	14:02
88.2	88.9	87.7	88.8	87.9	88.8	88.6	89.7	88.1	90.1	89.2	86.9	88.4	88.7	88.6	88.58	0.05	40.3	40.5	39.8	40.2	59.88	60.17	14:03
88.2	89.0	87.7	88.8	87.9	88.8	88.6	89.7	88.1	90.1	89.3	86.9	88.4	88.8	88.6	88.58	0.05	40.4	40.4	39.9	40.2	59.88	60.19	14:04
88.2	89.0	87.7	88.8	87.9	88.8	88.6	89.7	88.1	90.1	89.2	86.9	88.4	88.8	88.6	88.58	0.05	40.4	40.4	39.8	40.2	59.88	60.18	14:05
88.2	89.0	87.7	88.8	87.9	88.8	88.6	89.7	88.1	90.1	89.2	86.8	88.4	88.8	88.6	88.58	0.04	40.3	40.4	39.9	40.2	59.88	60.17	14:06
88.2	88.9	87.7	88.8	87.9	88.8	88.6	89.7	88.1	90.1	89.3	86.9	88.4	88.7	88.6	88.58	0.04	40.5	40.4	39.9	40.3	59.88	60.20	14:07
88.2	89.0	87.7	88.8	87.9	88.8	88.6	89.7	88.1	90.1	89.2	86.9	88.4	88.8	88.6	88.58	0.04	40.4	40.4	39.9	40.3	59.88	60.20	14:08
88.2	89.0	87.7	88.8	87.9	88.8	88.6	89.7	88.1	90.1	89.2	86.9	88.4	88.8	88.6	88.58	0.04	40.4	40.5	39.8	40.3	59.88	60.20	14:09
88.2	88.9	87.7	88.8	87.9	88.8	88.7	89.7	88.2	90.1	89.2	86.9	88.4	88.8	88.6	88.59	0.04	40.4	40.5	39.9	40.3	59.88	60.19	14:10
88.3	89.0	87.7	88.8	87.9	88.8	88.6	89.7	88.1	90.1	89.3	86.9	88.4	88.8	88.6	88.59	0.04	40.4	40.6	39.9	40.3	59.88	60.21	14:11
88.2	89.0	87.7	88.8	87.9	88.8	88.6	89.7	88.1	90.1	89.3	86.9	88.4	88.8	88.6	88.58	0.04	40.4	40.5	40.0	40.3	59.88	60.23	14:12
88.2	89.0	87.7	88.8	87.9	88.8	88.6	89.7	88.1	90.1	89.3	86.9	88.4	88.8	88.6	88.58	0.04	40.5	40.5	39.9	40.3	59.88	60.22	14:13
88.2	89.0	87.7	88.8	87.9	88.8	88.7	89.7	88.2	90.1	89.2	86.9	88.4	88.8	88.6	88.59	0.03	40.5	40.4	39.9	40.3	59.88	60.22	14:14
88.2	88.9	87.7	88.8	87.9	88.8	88.6	89.7	88.1	90.1	89.2	86.8	88.4	88.7	88.6	88.57	0.03	40.5	40.6	39.9	40.3	59.88	60.25	14:15
88.2	88.9	87.7	88.7	87.8	88.8	88.6	89.7	88.1	90.1	89.3	86.9	88.4	88.7	88.6	88.57	0.03	40.5	40.6	39.9	40.3	59.88	60.26	14:16
88.2	88.9	87.7	88.8	87.9	88.8	88.6	89.7	88.1	90.1	89.2	86.9	88.4	88.7	88.6	88.57	0.03	40.4	40.4	39.9	40.2	59.88	60.19	14:17
88.2	89.0	87.7	88.8	87.9	88.8	88.7	89.7	88.1	90.1	89.3	86.9	88.4	88.8	88.6	88.59	0.03	40.5	40.5	39.9	40.3	59.88	60.23	14:18
88.2	89.0	87.7	88.8	87.9	88.8	88.6	89.7	88.1	90.1	89.3	86.9	88.4	88.8	88.6	88.58	0.03	40.4	40.4	40.0	40.2	59.88	60.19	14:19
88.2	89.0	87.7	88.8	87.9	88.8	88.6	89.7	88.2	90.1	89.3	86.9	88.4	88.8	88.6	88.59	0.03	40.4	40.4	39.9	40.2	59.88	60.18	14:20
88.2	89.0	87.7	88.8	87.9	88.8	88.7	89.7	88.1	90.1	89.3	86.9	88.4	88.8	88.6	88.59	0.03	40.4	40.6	39.9	40.3	59.88	60.23	14:21
88.3	88.9	87.7	88.8	87.9	88.8	88.6	89.7	88.1	90.1	89.3	86.9	88.4	88.8	88.6	88.58	0.03	40.4	40.5	40.0	40.3	59.88	60.22	14:22
88.2	89.0	87.7	88.8	87.9	88.8	88.6	89.7	88.1	90.1	89.3	86.9	88.4	88.8	88.6	88.58	0.03	40.4	40.5	39.9	40.3	59.88	60.22	14:23
88.2	89.0	87.7	88.8	87.9	88.8	88.6	89.7	88.1	90.1	89.3	86.9	88.4	88.8	88.6	88.58	0.03	40.5	40.5	39.9	40.3	59.88	60.23	14:24
88.2	89.0	87.7	88.8	87.9	88.8	88.6	89.7	88.2	90.1	89.3	86.9	88.4	88.8	88.6	88.59	0.02	40.5	40.6	40.0	40.4	59.88	60.26	14:25
88.2	88.9	87.7	88.7	87.8	88.8	88.6	89.7	88.1	90.1	89.3	86.9	88.4	88.7	88.6	88.58	0.02	40.5	40.6	39.9	40.3	59.88	60.24	14:26
88.2	89.0	87.7	88.8	87.9	88.8	88.6	89.7	88.1	90.1	89.3	86.9	88.4	88.8	88.6	88.60	0.02	40.3	40.4	39.9	40.2	59.88	60.16	14:27
88.2	89.0	87.7	88.8	87.9	88.8	88.7	89.7	88.1	90.1	89.3	86.9	88.4	88.8	88.6	88.59	0.02	40.4	40.5	40.0	40.3	59.88	60.20	14:28
88.3	89.0	87.7	88.8	87.9	88.8	88.6	89.7	88.1	90.1	89.3	86.9	88.4	88.8	88.6	88.59	0.02	40.5	40.5	40.0	40.3	59.88	60.23	14:29
88.2	88.9	87.7	88.8	87.9	88.8	88.6	89.7	88.1	90.1	89.3	86.9	88.4	88.7	88.6	88.58	0.02	40.4	40.6	39.9	40.3	59.88	60.24	14:30
88.2	88.9	87.7	88.8	87.9	88.8	88.6	89.7	88.1	90.1	89.2	86.9	88.4	88.7	88.6	88.58	0.02	40.4	40.6	39.9	40.3	59.88	60.25	14:31
88.2	88.9	87.7	88.7	87.8	88.8	88.6	89.7	88.1	90.1	89.3	86.9	88.4	88.7	88.6	88.57	0.02	40.4	40.5	39.9	40.3	59.92	60.27	14:32
88.2	88.9	87.7	88.8	87.8	88.8	88.6	89.7	88.1	90.1	89.3	86.9	88.4	88.7	88.6	88.58	0.02	40.4	40.5	39.9	40.3	59.88	60.21	14:33
88.2	88.9	87.7	88.8	87.9	88.8	88.6	89.7	88.1	90.1	89.3	86.9	88.4	88.7	88.6	88.58	0.02	40.4	40.4	39.9	40.2	59.88	60.20	14:34
88.3	89.0	87.8	88.8	87.9	88.8	88.7	89.7	88.2	90.1	89.3	86.9	88.4	88.8	88.6	88.60	0.02	40.4	40.6	40.0	40.3	59.88	60.23	14:35
88.2	88.9	87.7	88.7	87.8	88.8	88.6	89.7	88.1	90.1	89.3	86.9	88.4	88.7	88.6	88.58	0.01	40.4	40.5	39.9	40.3	59.88	60.21	14:36
88.2	88.9	87.7	88.8	87.9	88.8	88.6	89.7	88.1	90.1	89.3	86.9	88.4	88.7	88.6	88.58	0.01	40.4	40.5	39.9	40.3	59.88	60.22	14:37
88.3	89.0	87.7	88.8	87.9	88.8	88.6	89.7	88.2	90.1	89.3	86.9	88.4	88.8	88.6	88.60	0.01	40.4	40.5	39.9	40.3	59.88	60.20	14:38
88.2	89.0	87.7	88.8	87.9	88.8	88.7	89.7	88.2	90.1	89.3	86.9	88.4	88.8	88.6	88.60	0.02	40.4	40.6	39.9	40.3	59.88	60.21	14:39
88.3	89.0	87.7	88.8	87.9	88.8	88.7	89.7	88.2	90.1	89.3	86.9	88.4	88.8	88.6	88.60	0.02	40.4	40.4	39.9	40.3	59.88	60.20	14:40
88.2	89.0	87.7	88.8	87.9	88.8	88.6	89.7	88.1	90.1	89.3	86.9	88.4	88.8	88.6	88.59	0.02	40.4	40.5	39.9	40.3	59.88	60.20	14:41
88.2	89.0	87.7	88.8	87.9	88.8	88.6	89.7	88.1	90.1	89.3	86.9	88.4	88.8	88.6	88.59	0.02	40.3	40.5	39.9	40.2	59.88	60.18	14:42
88.3	89.0	87.7	88.8	87.9	88.8	88.7	89.7	88.2	90.1	89.3	86.9	88.4	88.8	88.6	88.60	0.02	40.4	40.4	39.9	40.3	59.88	60.19	14:43
88.2	89.0	87.7	88.8	87.9	88.8	88.6	89.7	88.2	90.1	89.3	86.9	88.4	88.8	88.6	88.59	0.02	40.4	40.5	39.9	40.3	59.88	60.20	14:44
88.3	89.0	87.7	88.8	87.9	88.8	88.7	89.7	88.2	90.1	89.3	86.9	88.4	88.8	88.6	88.60	0.02	40.4	40.4	39.9	40.2	59.88	60.18	14:45
88.3	89.0	87.7	88.8	87.9	88.8	88.7	89.7	88.2	90.1	89.3	86.9	88.4	88.8	88.6	88.60	0.02	40.4	40.4	39.8	40.2	59.88	60.17	14:46
88.2	89.0	87.7	88.8	87.9	88.8	88.7	89.7	88.1	90.1	89.3	86.9	88.4	88.8	88.6	88.59	0.02	40.3	40.4	39.9	40.2	59.88	60.18	14:47
88.3	89.0	87.7	88.8	87.9	88.8	88.7	89.7	88.2	90.1	89.3	86.9	88.4	88.8	88.6	88.61	0.02	40.3	40.3	39.8	40.2	59.88	60.13	14:48
88.3	89.0	87.8	88.8	87.9	88.8	88.7	89.7	88.2	90.1	89.3	86.9	88.4	88.8	88.6	88.61	0.02	40.4	40.4	39.9	40.2	59.88	60.17	14:49
88.3	89.0	87.8	88.8	87.9	88.8	88.7	89.7	88.2	90.1	89.3	86.9	88.4	88.8	88.6	88.61	0.02	40.3	40.5	39.8	40.2	59.88	60.16	14:50
88.3	89.0	87.7	88.8	87.9	88.8	88.7	89.7	88.2	90.1	89.3	86.9	88.4	88.8	88.6	88.61	0.03	40.3	40.4	39.9	40.2	59.88	60.16	14:51
88.3	89.0	87.7	88.8	87.9	88.8	88.7	89.7	88.2	90.1	89.3	86.9	88.4	88.8	88.6	88.60	0.03	40.3	40.3	39.9	40.2	59.88	60.14	14:52
88.2	89.0	87.7	88.8	87.9	88.8	88.7	89.7	88.1	90.1	89.3	86.9	88.4	88.8	88.6	88.60	0.03	40.3	40.3	39.8	40.1	59.88	60.11	14:53
88.3	89.0	87.8	88.8	87.9	88.8	88.7	89.7	88.2	90.1	89.3	86.9	88.4	88.8	88.6	88.61	0.03	40.3	40.3	39.8	40.1	59.88	60.11	14:54
88.3	89.0	87.8	88.8	87.9	88.8	88.7	89.7	88.2	90.1	89.3	86.9	88.4	88.8	88.6	88.61	0.03	40.3	40.4	39.9	40.2	59.88	60.15	14:55
88.3	89.0	87.8	88.8	87.9	88.8	88.7	89.7	88.2	90.1	89.3	86.9	88.5	88.8	88.6	88.61	0.03	40.3	40.2	39.9	40.1	59.88	60.10	14:56

COMMENTS

Tested By C.L. Rutledge Date 3-30-93 Reviewed By Frank A. Denney Date 3-30-93

AMPACITY TEST. JOB NUMBER 93-0501. SAMPLE NUMBER 93-0501-08 DATA FILE 4C6G08NO.001 03-29-1993 F-25

POSITION 1				POSITION 2				POSITION 3				POSITION AVG			AVG		AMBIENT TEMPERATURE				AMPS		
Trd1	Twh1	Tbk1	Tgr1	Trd2	Twh2	Tbk2	Tgr2	Trd3	Twh3	Tbk3	Tgr3	Tav1	Tav2	Tav3	Twave	SLOPE	Tam1	Tam2	Tam3	Taav	It	I'	TIME
91.5	92.2	90.3	92.1	89.4	90.2	89.1	90.7	91.8	92.8	91.6	90.1	91.5	89.9	91.6	91.00	-0.02	40.8	40.9	40.5	40.8	60.72	60.81	01:31
91.5	92.2	90.3	92.1	89.4	90.2	89.1	90.7	91.9	92.8	91.6	90.1	91.5	89.8	91.6	91.00	-0.01	40.8	41.0	40.5	40.8	60.84	60.93	01:32
91.5	92.2	90.3	92.1	89.4	90.2	89.1	90.7	91.9	92.8	91.6	90.1	91.5	89.8	91.6	91.00	-0.00	40.8	40.9	40.5	40.7	60.68	60.76	01:33
91.5	92.2	90.3	92.1	89.3	90.1	89.1	90.7	91.8	92.8	91.6	90.1	91.5	89.8	91.6	90.97	-0.00	40.9	40.9	40.6	40.8	60.64	60.77	01:34
91.5	92.2	90.3	92.1	89.4	90.2	89.1	90.7	91.8	92.8	91.6	90.1	91.5	89.8	91.6	90.97	0.00	40.8	40.9	40.5	40.7	60.52	60.61	01:35
91.5	92.2	90.3	92.1	89.4	90.2	89.1	90.7	91.8	92.8	91.6	90.1	91.5	89.8	91.6	90.99	0.01	40.8	40.9	40.5	40.7	60.84	60.93	01:36
91.5	92.2	90.3	92.1	89.4	90.1	89.1	90.7	91.8	92.8	91.6	90.1	91.5	89.8	91.6	90.97	0.01	40.8	41.0	40.6	40.8	60.68	60.80	01:37
91.5	92.2	90.3	92.1	89.4	90.1	89.1	90.7	91.8	92.8	91.6	90.1	91.5	89.8	91.6	90.97	0.01	40.9	40.8	40.5	40.8	60.88	60.98	01:38
91.5	92.2	90.3	92.1	89.4	90.2	89.1	90.7	91.8	92.8	91.6	90.1	91.5	89.8	91.6	90.99	0.02	41.0	40.9	40.6	40.8	60.84	60.98	01:39
91.5	92.2	90.4	92.1	89.4	90.2	89.1	90.8	91.9	92.8	91.6	90.2	91.6	89.9	91.6	91.01	0.02	40.9	40.9	40.6	40.8	60.88	61.00	01:40
91.5	92.2	90.4	92.1	89.4	90.2	89.1	90.7	91.9	92.8	91.6	90.2	91.6	89.8	91.6	91.01	0.03	40.8	40.9	40.6	40.8	60.80	60.90	01:41
91.5	92.2	90.4	92.1	89.4	90.2	89.1	90.7	91.9	92.8	91.6	90.2	91.6	89.9	91.6	91.01	0.03	40.9	41.0	40.7	40.9	60.84	60.98	01:42
91.5	92.2	90.4	92.2	89.4	90.2	89.1	90.8	91.9	92.9	91.6	90.2	91.6	89.9	91.6	91.03	0.04	40.9	40.9	40.6	40.8	60.84	60.94	01:43
91.6	92.2	90.4	92.2	89.4	90.2	89.1	90.8	91.9	92.9	91.6	90.2	91.6	89.9	91.6	91.03	0.04	40.9	40.9	40.6	40.8	60.84	60.94	01:44
91.6	92.2	90.4	92.2	89.4	90.2	89.1	90.8	91.9	92.9	91.6	90.2	91.6	89.9	91.6	91.03	0.05	40.9	41.0	40.6	40.8	60.72	60.84	01:45
91.6	92.2	90.4	92.2	89.4	90.2	89.1	90.8	91.9	92.9	91.6	90.2	91.6	89.9	91.6	91.03	0.05	40.9	40.9	40.5	40.8	60.84	60.94	01:46
91.5	92.2	90.4	92.2	89.4	90.2	89.1	90.8	91.9	92.9	91.6	90.2	91.6	89.9	91.6	91.03	0.06	40.9	40.9	40.6	40.8	60.56	60.67	01:47
91.6	92.2	90.4	92.2	89.4	90.2	89.1	90.8	91.9	92.8	91.6	90.1	91.6	89.9	91.6	91.03	0.06	40.9	40.9	40.5	40.8	60.84	60.93	01:48
91.6	92.2	90.4	92.2	89.4	90.2	89.1	90.8	91.9	92.9	91.6	90.2	91.6	89.9	91.6	91.03	0.07	40.8	40.9	40.6	40.8	60.76	60.85	01:49
91.5	92.2	90.4	92.1	89.4	90.2	89.1	90.8	91.9	92.8	91.6	90.2	91.6	89.9	91.6	91.03	0.08	41.0	40.9	40.6	40.8	60.72	60.83	01:50
91.5	92.2	90.4	92.1	89.4	90.2	89.1	90.7	91.9	92.9	91.6	90.2	91.6	89.9	91.6	91.02	0.08	40.9	40.9	40.5	40.8	60.68	60.78	01:51
91.5	92.2	90.4	92.2	89.4	90.2	89.1	90.8	91.9	92.9	91.6	90.2	91.6	89.9	91.6	91.02	0.09	41.0	41.0	40.6	40.8	60.84	60.97	01:52
91.5	92.2	90.4	92.2	89.4	90.2	89.1	90.8	91.9	92.9	91.6	90.2	91.6	89.9	91.6	91.02	0.09	40.9	40.9	40.6	40.8	60.76	60.86	01:53
91.5	92.2	90.4	92.2	89.4	90.2	89.1	90.7	91.9	92.9	91.6	90.2	91.6	89.9	91.6	91.02	0.09	40.8	40.9	40.5	40.8	60.84	60.92	01:54
91.6	92.2	90.4	92.2	89.4	90.2	89.1	90.8	91.9	92.9	91.6	90.2	91.6	89.9	91.6	91.04	0.09	40.9	41.0	40.6	40.8	60.80	60.91	01:55
91.6	92.2	90.4	92.2	89.4	90.2	89.2	90.8	91.9	92.9	91.6	90.2	91.6	89.9	91.6	91.04	0.09	40.9	40.9	40.6	40.8	60.88	60.98	01:56
91.6	92.2	90.4	92.2	89.4	90.2	89.1	90.8	91.9	92.9	91.7	90.2	91.6	89.9	91.6	91.04	0.09	40.9	40.9	40.6	40.8	60.76	60.86	01:57
91.6	92.2	90.4	92.2	89.4	90.2	89.1	90.8	91.9	92.9	91.6	90.2	91.6	89.9	91.6	91.04	0.09	40.9	40.9	40.7	40.8	60.84	60.95	01:58
91.6	92.2	90.4	92.2	89.4	90.2	89.1	90.8	91.9	92.9	91.6	90.2	91.6	89.9	91.6	91.03	0.09	41.0	40.9	40.6	40.8	60.72	60.84	01:59
91.6	92.2	90.4	92.2	89.4	90.2	89.1	90.8	91.9	92.9	91.7	90.2	91.6	89.9	91.7	91.04	0.09	40.8	40.9	40.6	40.8	60.88	60.96	02:00
91.5	92.2	90.4	92.2	89.4	90.2	89.1	90.8	91.9	92.9	91.6	90.2	91.6	89.9	91.6	91.03	0.09	40.8	40.9	40.5	40.8	60.72	60.80	02:01
91.5	92.2	90.4	92.1	89.4	90.2	89.1	90.7	91.9	92.9	91.6	90.2	91.6	89.9	91.6	91.02	0.09	40.9	41.0	40.5	40.8	60.80	60.90	02:02
91.6	92.2	90.4	92.2	89.4	90.2	89.1	90.8	91.9	92.9	91.6	90.2	91.6	89.9	91.6	91.04	0.10	40.9	41.0	40.6	40.8	60.60	60.69	02:03
91.5	92.2	90.4	92.2	89.4	90.2	89.1	90.7	91.9	92.9	91.6	90.1	91.6	89.9	91.6	91.02	0.09	40.9	41.0	40.6	40.8	60.76	60.89	02:04
91.5	92.2	90.4	92.2	89.4	90.2	89.1	90.7	91.9	92.8	91.6	90.1	91.6	89.9	91.6	91.02	0.09	40.8	40.9	40.7	40.8	60.68	60.80	02:05
91.5	92.2	90.4	92.1	89.4	90.2	89.1	90.7	91.9	92.8	91.6	90.1	91.6	89.9	91.6	91.01	0.09	40.9	40.9	40.5	40.8	60.72	60.81	02:06
91.5	92.2	90.3	92.1	89.4	90.2	89.1	90.7	91.8	92.8	91.6	90.1	91.5	89.9	91.6	91.00	0.09	41.0	40.9	40.6	40.8	60.96	61.10	02:07
91.6	92.2	90.4	92.1	89.4	90.2	89.1	90.8	91.9	92.9	91.6	90.2	91.6	89.9	91.6	91.02	0.09	40.9	40.9	40.6	40.8	60.80	60.90	02:08
91.6	92.2	90.4	92.2	89.4	90.2	89.1	90.8	91.9	92.9	91.6	90.2	91.6	89.9	91.6	91.04	0.09	40.9	40.9	40.6	40.8	60.96	61.07	02:09
91.6	92.3	90.4	92.2	89.5	90.3	89.2	90.8	91.9	92.9	91.7	90.2	91.6	89.9	91.7	91.06	0.09	40.9	40.9	40.6	40.8	60.96	61.05	02:10
91.6	92.3	90.4	92.2	89.5	90.2	89.1	90.8	91.9	92.9	91.7	90.2	91.6	89.9	91.7	91.06	0.09	40.8	40.9	40.6	40.8	60.88	60.95	02:11
91.6	92.3	90.4	92.2	89.4	90.2	89.2	90.8	91.9	92.9	91.7	90.2	91.6	89.9	91.7	91.06	0.09	40.9	41.0	40.6	40.8	60.88	60.99	02:12
91.6	92.3	90.4	92.2	89.5	90.3	89.2	90.8	91.9	92.9	91.7	90.2	91.6	89.9	91.7	91.07	0.10	41.0	40.9	40.6	40.8	60.72	60.82	02:13
91.6	92.3	90.4	92.2	89.5	90.3	89.2	90.8	91.9	92.9	91.7	90.2	91.6	89.9	91.7	91.07	0.10	40.9	41.0	40.6	40.8	60.80	60.89	02:14
91.6	92.3	90.4	92.2	89.4	90.3	89.2	90.8	91.9	92.9	91.7	90.2	91.6	89.9	91.7	91.06	0.10	40.9	40.9	40.7	40.8	60.76	60.87	02:15
91.6	92.2	90.4	92.2	89.4	90.2	89.2	90.8	91.9	92.9	91.6	90.2	91.6	89.9	91.6	91.05	0.10	40.9	40.9	40.6	40.8	60.60	60.69	02:16
91.5	92.2	90.4	92.2	89.4	90.2	89.1	90.8	91.9	92.9	91.6	90.2	91.6	89.9	91.6	91.03	0.10	40.9	41.0	40.6	40.8	60.72	60.84	02:17
91.5	92.2	90.4	92.1	89.4	90.2	89.1	90.8	91.9	92.8	91.6	90.1	91.6	89.9	91.6	91.01	0.10	40.9	40.9	40.6	40.8	60.56	60.66	02:18
91.5	92.2	90.3	92.1	89.4	90.2	89.1	90.7	91.8	92.8	91.6	90.1	91.6	89.9	91.6	91.01	0.09	40.9	40.9	40.6	40.8	60.80	60.92	02:19
91.5	92.2	90.3	92.1	89.4	90.2	89.1	90.7	91.8	92.8	91.6	90.1	91.5	89.9	91.6	91.00	0.09	40.9	40.9	40.5	40.8	60.80	60.90	02:20
91.5	92.2	90.4	92.1	89.4	90.2	89.1	90.8	91.9	92.8	91.6	90.1	91.6	89.9	91.6	91.01	0.08	40.8	40.9	40.5	40.8	60.84	60.92	02:21
91.5	92.2	90.4	92.1	89.4	90.2	89.1	90.8	91.9	92.8	91.6	90.2	91.6	89.9	91.6	91.02	0.08	40.9	41.0	40.5	40.8	60.88	60.98	02:22
91.5	92.2	90.4	92.1	89.4	90.2	89.1	90.8	91.9	92.9	91.6	90.2	91.6	89.9	91.6	91.03	0.07	40.9	40.9	40.5	40.8	60.88	60.96	02:23
91.5	92.2	90.4	92.2	89.5	90.2	89.2	90.8	91.9	92.9	91.6	90.2	91.6	89.9	91.7	91.05	0.07	40.9	40.9	40.6	40.8	60.92	61.01	02:24
91.6	92.2	90.4	92.2	89.5	90.2	89.2	90.8	91.9	92.9	91.7	90.2	91.6	89.9	91.6	91.05	0.06	40.8	40.9	40.5	40.7	60.88	60.93	02:25
91.6	92.2	90.4	92.2	89.5	90.3	89.2	90.8	91.9	92.9	91.7	90.2	91.6	89.9	91.7	91.05	0.06	41.1	40.9	40.6	40.9	60.84	60.96	02:26
91.5	92.2	90.4	92.2	89.4	90.2	89.1	90.8	91.9	92.9	91.6	90.2	91.6	89.9	91.6	91.03	0.05	40.9	40.9	40.6	40.8	60.32	60.40	02:27
91.5	92.2	90.4	92.2	89.4	90.2	89.2	90.8	91.9	92.9	91.6	90.1	91.6	89.9	91.6	91.03	0.05	40.9	40.9	40.6	40.8	60.76	60.84	02:28
91.5	92.2	90.3	92.1	89.4	90.2	89.1	90.8	91.8	92.8	91.6	90.1	91.5	89.9	91.6	91.00	0.05	40.8	40.9	40.5	40.7	60.64	60.70	02:29
91.5	92.2	90.3	92.1	89.4	90.2	89.1	90.8	91.8	92.8	91.6	90.1	91.5	89.9	91.6	91.01	0.04	40.8	40.9	40.5	40.8	60.60	60.67	02:30

COMMENTS

Tested By C.L. Rutledge Date 3-30-93 Reviewed By Frank G. Denney Date 3-30-93

AMPACITY TEST.   JOB NUMBER 93-0501.   SAMPLE NUMBER 93-0501-08   DATA FILE 4C6608NO.001   03-29-1993   F-26

POSITION 1				POSITION 2				POSITION 3				POSITION AVG			AVG		AMBIENT TEMPERATURE				AMPS		
Trd1	Twh1	Tbk1	Tgr1	Trd2	Twh2	Tbk2	Tgr2	Trd3	Twh3	Tbk3	Tgr3	Tav1	Tav2	Tav3	Tvave	SLOPE	Tam1	Tam2	Tam3	Taav	It	I'	TIME
91.5	92.2	90.3	92.1	89.4	90.2	89.1	90.8	91.8	92.8	91.6	90.1	91.6	89.9	91.6	91.01	0.04	40.8	40.9	40.5	40.7	60.80	60.86	02:31
91.5	92.2	90.3	92.1	89.4	90.2	89.1	90.8	91.8	92.8	91.6	90.1	91.5	89.9	91.6	91.01	0.03	40.9	40.9	40.6	40.8	60.72	60.82	02:32
91.5	92.2	90.3	92.1	89.4	90.2	89.1	90.8	91.8	92.8	91.6	90.1	91.5	89.9	91.6	91.01	0.03	40.8	40.9	40.6	40.8	60.80	60.88	02:33
91.5	92.2	90.3	92.1	89.4	90.2	89.1	90.7	91.8	92.8	91.6	90.1	91.5	89.9	91.6	91.00	0.02	40.8	40.9	40.6	40.8	60.72	60.81	02:34
91.5	92.2	90.4	92.1	89.4	90.2	89.1	90.8	91.8	92.8	91.6	90.1	91.6	89.9	91.6	91.01	0.01	40.9	40.9	40.5	40.7	60.88	60.94	02:35
91.5	92.2	90.4	92.1	89.4	90.2	89.1	90.8	91.9	92.8	91.6	90.1	91.6	89.9	91.6	91.02	0.01	40.9	40.9	40.6	40.8	60.96	61.05	02:36
91.5	92.2	90.3	92.1	89.4	90.2	89.1	90.8	91.8	92.8	91.6	90.1	91.6	89.9	91.6	91.01	0.00	40.8	40.9	40.6	40.8	60.88	60.96	02:37
91.5	92.2	90.4	92.1	89.4	90.2	89.1	90.8	91.9	92.9	91.6	90.1	91.6	89.9	91.6	91.03	-0.00	40.8	40.8	40.5	40.7	60.92	60.97	02:38
91.5	92.2	90.4	92.2	89.5	90.2	89.2	90.8	91.9	92.9	91.6	90.2	91.6	89.9	91.6	91.04	-0.00	40.9	40.9	40.6	40.8	60.80	60.87	02:39
91.6	92.2	90.4	92.2	89.4	90.2	89.2	90.8	91.9	92.9	91.6	90.2	91.6	89.9	91.6	91.04	-0.01	40.9	40.9	40.6	40.8	60.88	60.94	02:40
91.6	92.2	90.4	92.2	89.5	90.3	89.2	90.8	91.9	92.9	91.6	90.2	91.6	89.9	91.7	91.05	-0.01	40.8	40.9	40.6	40.8	60.80	60.87	02:41
91.6	92.2	90.4	92.2	89.4	90.3	89.2	90.8	91.9	92.9	91.6	90.2	91.6	89.9	91.7	91.05	-0.01	40.8	40.9	40.6	40.8	60.84	60.89	02:42
91.6	92.2	90.4	92.2	89.5	90.3	89.2	90.8	91.9	92.9	91.7	90.2	91.6	89.9	91.7	91.06	-0.00	40.8	41.0	40.5	40.8	60.84	60.91	02:43
91.6	92.2	90.4	92.2	89.5	90.2	89.2	90.8	91.9	92.9	91.7	90.2	91.6	89.9	91.7	91.04	-0.00	40.8	40.9	40.5	40.8	60.68	60.73	02:44
91.6	92.2	90.4	92.2	89.4	90.2	89.2	90.8	91.9	92.9	91.6	90.2	91.6	89.9	91.6	91.04	-0.00	40.9	40.9	40.5	40.8	60.76	60.83	02:45
91.6	92.2	90.4	92.2	89.4	90.2	89.2	90.8	91.9	92.9	91.6	90.2	91.6	89.9	91.6	91.04	-0.00	40.8	40.9	40.6	40.7	60.68	60.72	02:46
91.5	92.2	90.4	92.2	89.4	90.2	89.1	90.8	91.9	92.9	91.6	90.2	91.6	89.9	91.6	91.03	-0.00	40.8	40.9	40.5	40.8	60.80	60.87	02:47
91.6	92.2	90.4	92.2	89.4	90.2	89.2	90.8	91.9	92.9	91.7	90.2	91.6	89.9	91.7	91.05	0.00	40.8	40.9	40.6	40.8	60.80	60.87	02:48
91.6	92.2	90.4	92.2	89.4	90.2	89.2	90.8	91.9	92.9	91.7	90.2	91.6	89.9	91.7	91.05	0.00	40.8	40.9	40.6	40.8	60.88	60.95	02:49
91.6	92.2	90.4	92.2	89.4	90.2	89.2	90.8	91.9	92.9	91.6	90.2	91.6	89.9	91.6	91.05	0.00	40.9	40.8	40.6	40.8	60.80	60.86	02:50
91.5	92.2	90.4	92.2	89.4	90.2	89.2	90.8	91.9	92.9	91.6	90.2	91.6	89.9	91.6	91.04	0.00	40.9	40.9	40.6	40.8	60.84	60.92	02:51
91.6	92.3	90.4	92.2	89.5	90.3	89.2	90.8	91.9	92.9	91.7	90.2	91.6	89.9	91.7	91.06	0.01	40.9	40.9	40.6	40.8	60.80	60.87	02:52
91.6	92.2	90.4	92.2	89.5	90.2	89.2	90.8	91.9	92.9	91.6	90.2	91.6	89.9	91.6	91.05	0.01	40.8	40.9	40.6	40.8	60.80	60.86	02:53
91.6	92.3	90.4	92.2	89.5	90.3	89.2	90.8	91.9	92.9	91.7	90.2	91.6	89.9	91.7	91.06	0.01	41.0	40.9	40.6	40.8	60.84	60.93	02:54
91.6	92.3	90.4	92.2	89.5	90.3	89.2	90.8	91.9	92.9	91.7	90.2	91.6	89.9	91.7	91.06	0.01	40.9	40.9	40.5	40.8	60.80	60.86	02:55
91.6	92.3	90.4	92.2	89.5	90.3	89.2	90.8	91.9	92.9	91.7	90.2	91.6	89.9	91.7	91.07	0.02	40.9	40.9	40.5	40.8	60.80	60.85	02:56
91.6	92.3	90.4	92.2	89.5	90.3	89.2	90.8	91.9	92.9	91.7	90.2	91.6	89.9	91.7	91.07	0.02	40.8	40.9	40.5	40.7	60.84	60.86	02:57
91.6	92.3	90.4	92.2	89.5	90.3	89.2	90.8	91.9	92.9	91.7	90.2	91.6	89.9	91.7	91.07	0.02	40.8	40.9	40.5	40.7	60.76	60.79	02:58
91.6	92.3	90.4	92.2	89.5	90.3	89.2	90.8	91.9	92.9	91.7	90.2	91.6	89.9	91.7	91.07	0.03	40.9	40.9	40.6	40.8	60.80	60.87	02:59
91.6	92.2	90.4	92.2	89.4	90.2	89.2	90.8	91.9	92.9	91.6	90.2	91.6	89.9	91.7	91.05	0.03	40.8	40.9	40.6	40.8	60.60	60.66	03:00
91.6	92.2	90.4	92.2	89.4	90.2	89.2	90.8	91.9	92.9	91.6	90.2	91.6	89.9	91.6	91.04	0.03	40.8	40.9	40.6	40.8	60.80	60.88	03:01
91.6	92.3	90.4	92.2	89.4	90.2	89.2	90.8	91.9	92.9	91.7	90.2	91.6	89.9	91.7	91.05	0.03	40.8	40.9	40.5	40.8	60.80	60.86	03:02
91.6	92.3	90.4	92.2	89.5	90.3	89.2	90.8	91.9	92.9	91.6	90.2	91.6	89.9	91.7	91.06	0.03	40.8	40.9	40.5	40.7	60.96	60.99	03:03
91.6	92.3	90.4	92.2	89.5	90.3	89.2	90.8	91.9	92.9	91.7	90.2	91.6	89.9	91.7	91.07	0.03	40.9	40.9	40.5	40.8	60.84	60.91	03:04
91.6	92.3	90.4	92.2	89.5	90.3	89.2	90.8	91.9	92.9	91.7	90.2	91.6	89.9	91.7	91.06	0.03	40.8	40.9	40.5	40.8	60.76	60.82	03:05
91.6	92.3	90.4	92.2	89.5	90.3	89.2	90.8	91.9	92.9	91.7	90.2	91.6	89.9	91.7	91.08	0.03	40.9	40.9	40.6	40.8	60.76	60.81	03:06
91.6	92.3	90.4	92.2	89.5	90.3	89.2	90.8	91.9	92.9	91.7	90.2	91.6	89.9	91.7	91.08	0.03	40.8	40.9	40.6	40.8	60.80	60.84	03:07
91.6	92.3	90.4	92.2	89.5	90.3	89.2	90.8	91.9	92.9	91.7	90.2	91.6	89.9	91.7	91.07	0.03	40.8	40.9	40.5	40.8	60.72	60.77	03:08
91.6	92.3	90.4	92.2	89.5	90.3	89.2	90.8	91.9	92.9	91.7	90.2	91.6	89.9	91.7	91.07	0.03	40.9	40.8	40.6	40.8	60.88	60.94	03:09
91.6	92.3	90.4	92.2	89.5	90.3	89.2	90.8	91.9	92.9	91.7	90.2	91.6	89.9	91.7	91.07	0.04	41.0	40.9	40.5	40.8	60.76	60.84	03:10
91.6	92.3	90.4	92.2	89.5	90.3	89.2	90.8	91.9	92.9	91.7	90.2	91.6	89.9	91.7	91.06	0.04	40.8	40.8	40.5	40.7	60.84	60.88	03:11
91.6	92.3	90.4	92.2	89.5	90.3	89.2	90.8	91.9	92.9	91.7	90.2	91.6	89.9	91.7	91.07	0.05	40.9	40.9	40.6	40.8	60.56	60.64	03:12
91.6	92.2	90.4	92.2	89.4	90.2	89.2	90.8	91.9	92.9	91.6	90.2	91.6	89.9	91.6	91.05	0.05	40.9	40.9	40.6	40.8	60.64	60.72	03:13
91.5	92.2	90.4	92.2	89.4	90.2	89.1	90.8	91.9	92.9	91.6	90.2	91.6	89.9	91.6	91.03	0.05	40.8	40.9	40.5	40.8	60.60	60.66	03:14
91.5	92.2	90.4	92.1	89.4	90.2	89.1	90.7	91.9	92.8	91.6	90.1	91.6	89.9	91.6	91.02	0.05	40.8	40.9	40.6	40.8	60.72	60.82	03:15
91.5	92.2	90.3	92.1	89.4	90.2	89.1	90.7	91.8	92.8	91.6	90.1	91.5	89.9	91.6	90.99	0.05	40.8	40.9	40.6	40.8	60.60	60.69	03:16
91.5	92.2	90.3	92.1	89.4	90.2	89.1	90.7	91.8	92.8	91.6	90.1	91.5	89.9	91.6	90.99	0.04	40.8	40.8	40.5	40.7	60.84	60.91	03:17
91.5	92.2	90.3	92.1	89.4	90.2	89.1	90.7	91.8	92.8	91.6	90.1	91.5	89.9	91.6	91.00	0.04	40.8	40.8	40.5	40.7	60.64	60.69	03:18
91.5	92.2	90.3	92.1	89.4	90.2	89.1	90.7	91.8	92.8	91.6	90.1	91.5	89.9	91.6	90.99	0.03	40.8	40.8	40.5	40.7	60.68	60.75	03:19
91.5	92.2	90.3	92.1	89.4	90.2	89.1	90.7	91.8	92.8	91.6	90.1	91.5	89.9	91.6	91.00	0.02	41.0	40.8	40.6	40.8	60.68	60.78	03:20
91.5	92.2	90.3	92.1	89.4	90.2	89.1	90.7	91.8	92.8	91.6	90.1	91.5	89.9	91.6	90.99	0.01	40.8	40.9	40.6	40.8	60.68	60.77	03:21
91.5	92.2	90.3	92.1	89.4	90.2	89.1	90.7	91.8	92.8	91.6	90.1	91.5	89.9	91.6	90.99	0.01	40.9	40.9	40.5	40.8	60.68	60.78	03:22
91.5	92.2	90.3	92.1	89.4	90.2	89.1	90.8	91.9	92.8	91.6	90.1	91.5	89.9	91.6	91.01	0.00	40.8	40.9	40.6	40.8	60.92	60.99	03:23
91.5	92.2	90.4	92.2	89.4	90.2	89.2	90.8	91.9	92.8	91.6	90.1	91.6	89.9	91.6	91.03	0.00	40.9	40.9	40.6	40.8	60.84	60.92	03:24
91.5	92.2	90.4	92.2	89.4	90.2	89.1	90.8	91.9	92.9	91.6	90.1	91.6	89.9	91.6	91.03	0.00	40.8	40.9	40.6	40.8	60.80	60.86	03:25
91.5	92.2	90.3	92.1	89.4	90.2	89.1	90.7	91.8	92.8	91.6	90.1	91.5	89.8	91.6	90.99	-0.00	40.8	40.9	40.5	40.8	60.52	60.61	03:26
91.5	92.2	90.3	92.1	89.4	90.2	89.1	90.8	91.8	92.8	91.6	90.1	91.5	89.9	91.6	91.00	-0.01	40.8	40.9	40.5	40.7	60.80	60.86	03:27
91.5	92.2	90.3	92.1	89.4	90.2	89.1	90.7	91.8	92.8	91.6	90.1	91.5	89.9	91.6	90.98	-0.01	40.9	40.9	40.6	40.8	60.64	60.74	03:28
91.5	92.2	90.3	92.1	89.4	90.2	89.1	90.8	91.8	92.8	91.6	90.1	91.5	89.9	91.6	91.01	-0.02	41.1	40.9	40.6	40.9	60.76	60.89	03:29
91.5	92.2	90.3	92.1	89.4	90.2	89.1	90.7	91.8	92.8	91.6	90.1	91.5	89.8	91.6	90.98	-0.03	40.9	40.8	40.5	40.8	60.72	60.82	03:30

COMMENTS ____________________

Tested By *C L Rutledge*   Date ~~3-29-93~~ 3-30-93 CLR 3-30-93   Reviewed By ~~3-30~~ *Paul G. Deing*   Date 3-30-93

3-30-93

AMPACITY TEST. JOB NUMBER 93-0501. SAMPLE NUMBER 93-0501-08 DATA FILE 4C6G08NO.001 03-29-1993 F-27

POSITION 1				POSITION 2				POSITION 3				POSITION AVG			AVG		AMBIENT TEMPERATURE				AMPS		
Trd1	Twh1	Tbk1	Tgr1	Trd2	Twh2	Tbk2	Tgr2	Trd3	Twh3	Tbk3	Tgr3	Tav1	Tav2	Tav3	Twave	SLOPE	Tam1	Tam2	Tam3	Taav	It	I'	TIME
91.5	92.2	90.3	92.1	89.4	90.2	89.1	90.8	91.8	92.8	91.6	90.1	91.5	89.9	91.6	91.01	-0.03	40.9	40.9	40.6	40.8	60.80	60.90	03:31
91.5	92.2	90.3	92.1	89.4	90.2	89.1	90.8	91.8	92.8	91.6	90.1	91.5	89.9	91.6	91.01	-0.04	40.8	40.9	40.5	40.7	60.84	60.90	03:32
91.5	92.2	90.3	92.1	89.4	90.2	89.1	90.8	91.9	92.8	91.6	90.1	91.6	89.9	91.6	91.02	-0.04	40.8	40.8	40.5	40.7	60.88	60.94	03:33
91.5	92.2	90.3	92.2	89.4	90.2	89.1	90.8	91.9	92.8	91.6	90.2	91.6	89.9	91.6	91.03	-0.05	40.8	40.9	40.5	40.7	60.88	60.92	03:34
91.5	92.2	90.3	92.1	89.4	90.2	89.1	90.8	91.9	92.9	91.6	90.1	91.5	89.9	91.6	91.02	-0.05	40.9	40.9	40.5	40.8	60.88	60.95	03:35
91.5	92.2	90.4	92.2	89.4	90.2	89.1	90.8	91.9	92.9	91.6	90.1	91.6	89.9	91.6	91.03	-0.05	40.8	40.9	40.5	40.8	60.84	60.91	03:36
91.5	92.2	90.4	92.2	89.4	90.2	89.2	90.8	91.9	92.9	91.6	90.1	91.6	89.9	91.6	91.04	-0.06	40.8	40.9	40.6	40.7	60.84	60.90	03:37
91.5	92.2	90.4	92.2	89.4	90.2	89.2	90.8	91.9	92.8	91.6	90.1	91.6	89.9	91.6	91.03	-0.06	40.9	40.9	40.6	40.8	60.84	60.92	03:38
91.5	92.2	90.3	92.1	89.4	90.2	89.1	90.8	91.9	92.8	91.6	90.1	91.6	89.9	91.6	91.01	-0.06	40.8	40.8	40.6	40.8	60.68	60.75	03:39
91.5	92.2	90.3	92.1	89.4	90.2	89.1	90.7	91.8	92.8	91.6	90.1	91.5	89.9	91.6	91.00	-0.06	40.8	40.8	40.5	40.7	60.80	60.86	03:40
91.5	92.2	90.3	92.1	89.4	90.2	89.1	90.7	91.8	92.8	91.6	90.1	91.5	89.9	91.6	91.01	-0.06	40.8	40.9	40.6	40.8	60.80	60.89	03:41
91.5	92.2	90.3	92.1	89.4	90.2	89.1	90.7	91.8	92.8	91.6	90.1	91.5	89.9	91.6	90.99	-0.07	40.8	40.9	40.5	40.7	60.72	60.80	03:42
91.5	92.2	90.3	92.1	89.4	90.2	89.1	90.8	91.9	92.8	91.6	90.1	91.6	89.9	91.6	91.01	-0.07	40.9	40.9	40.6	40.8	60.80	60.89	03:43
91.5	92.2	90.3	92.1	89.4	90.2	89.1	90.7	91.9	92.8	91.6	90.1	91.5	89.9	91.6	91.00	-0.07	41.0	40.8	40.5	40.8	60.88	60.98	03:44
91.5	92.2	90.4	92.1	89.4	90.2	89.1	90.7	91.9	92.8	91.6	90.1	91.6	89.9	91.6	91.02	-0.07	40.8	40.8	40.6	40.7	60.88	60.95	03:45
91.6	92.2	90.4	92.2	89.4	90.2	89.2	90.8	91.9	92.8	91.6	90.1	91.6	89.9	91.6	91.03	-0.07	40.9	40.9	40.6	40.8	60.80	60.89	03:46
91.5	92.2	90.4	92.1	89.4	90.2	89.1	90.7	91.8	92.8	91.6	90.1	91.6	89.9	91.6	91.01	-0.07	40.9	40.9	40.5	40.7	60.68	60.75	03:47
91.5	92.2	90.4	92.1	89.4	90.2	89.1	90.7	91.8	92.8	91.6	90.1	91.6	89.9	91.6	91.00	-0.07	40.8	40.9	40.6	40.8	60.80	60.89	03:48
91.5	92.2	90.3	92.1	89.4	90.2	89.1	90.7	91.8	92.8	91.6	90.1	91.5	89.9	91.6	91.00	-0.07	40.9	40.8	40.5	40.8	60.84	60.94	03:49
91.5	92.2	90.3	92.1	89.4	90.2	89.1	90.8	91.9	92.8	91.6	90.1	91.5	89.9	91.6	91.00	-0.07	40.8	40.8	40.5	40.7	60.88	60.94	03:50
91.5	92.2	90.3	92.1	89.4	90.2	89.1	90.7	91.8	92.8	91.6	90.1	91.5	89.9	91.6	90.99	-0.08	40.8	40.9	40.5	40.8	60.88	60.96	03:51
91.5	92.2	90.3	92.1	89.4	90.2	89.1	90.7	91.8	92.8	91.6	90.1	91.5	89.9	91.6	90.99	-0.08	40.8	40.9	40.5	40.7	60.72	60.79	03:52
91.5	92.2	90.3	92.1	89.4	90.2	89.1	90.7	91.8	92.8	91.6	90.1	91.5	89.9	91.6	91.00	-0.08	40.8	40.9	40.5	40.7	60.80	60.87	03:53
91.5	92.2	90.3	92.1	89.4	90.2	89.1	90.7	91.8	92.8	91.6	90.1	91.5	89.9	91.6	91.00	-0.07	40.8	40.9	40.5	40.7	60.76	60.83	03:54
91.5	92.2	90.3	92.1	89.4	90.2	89.1	90.7	91.8	92.8	91.6	90.1	91.5	89.8	91.6	90.98	-0.08	40.8	40.9	40.6	40.8	60.32	60.40	03:55
91.5	92.2	90.3	92.1	89.4	90.2	89.1	90.7	91.8	92.8	91.6	90.1	91.5	89.8	91.6	90.98	-0.07	40.8	40.8	40.6	40.7	60.80	60.87	03:56
91.5	92.2	90.3	92.1	89.4	90.2	89.1	90.7	91.8	92.8	91.6	90.1	91.5	89.8	91.6	90.98	-0.07	40.9	40.8	40.5	40.8	60.68	60.78	03:57
91.5	92.2	90.3	92.1	89.4	90.2	89.1	90.7	91.8	92.8	91.6	90.1	91.5	89.8	91.6	90.97	-0.07	40.7	40.9	40.5	40.7	60.80	60.86	03:58
91.5	92.2	90.3	92.1	89.4	90.2	89.1	90.7	91.8	92.8	91.6	90.1	91.5	89.8	91.6	90.97	-0.07	40.8	40.8	40.5	40.7	60.72	60.79	03:59
91.5	92.1	90.3	92.1	89.3	90.1	89.1	90.7	91.8	92.8	91.6	90.1	91.5	89.8	91.5	90.94	-0.08	40.8	40.9	40.4	40.7	60.68	60.76	04:00
91.5	92.2	90.3	92.1	89.3	90.1	89.1	90.7	91.8	92.8	91.5	90.1	91.5	89.8	91.6	90.95	-0.08	40.8	40.9	40.5	40.7	60.72	60.82	04:01
91.5	92.1	90.3	92.1	89.4	90.1	89.1	90.7	91.8	92.8	91.5	90.1	91.5	89.8	91.5	90.95	-0.08	40.8	40.9	40.5	40.7	60.64	60.74	04:02
91.5	92.1	90.3	92.1	89.4	90.2	89.1	90.7	91.8	92.8	91.5	90.1	91.5	89.8	91.5	90.95	-0.09	40.8	40.9	40.5	40.7	60.80	60.89	04:03
91.5	92.1	90.3	92.1	89.4	90.2	89.1	90.7	91.8	92.8	91.6	90.1	91.5	89.8	91.6	90.96	-0.08	40.8	40.8	40.5	40.7	60.80	60.88	04:04
91.5	92.1	90.3	92.1	89.3	90.1	89.1	90.7	91.8	92.8	91.6	90.1	91.5	89.8	91.5	90.95	-0.08	40.8	40.9	40.5	40.8	60.80	60.90	04:05
91.5	92.1	90.3	92.1	89.4	90.1	89.1	90.7	91.8	92.8	91.5	90.1	91.5	89.8	91.5	90.95	-0.08	40.8	40.9	40.6	40.8	60.68	60.79	04:06
91.4	92.1	90.3	92.1	89.3	90.1	89.1	90.7	91.8	92.8	91.5	90.1	91.5	89.8	91.5	90.94	-0.08	41.0	40.8	40.6	40.8	60.68	60.82	04:07
91.4	92.1	90.3	92.1	89.3	90.1	89.1	90.7	91.8	92.8	91.5	90.1	91.5	89.8	91.5	90.93	-0.08	40.8	40.8	40.6	40.7	60.56	60.67	04:08
91.4	92.1	90.3	92.1	89.3	90.1	89.0	90.7	91.8	92.7	91.5	90.0	91.5	89.8	91.5	90.92	-0.08	40.9	40.8	40.6	40.8	60.56	60.69	04:09
91.4	92.1	90.3	92.1	89.3	90.1	89.0	90.7	91.8	92.7	91.5	90.0	91.5	89.8	91.5	90.91	-0.08	40.8	40.9	40.6	40.8	60.72	60.85	04:10
91.4	92.1	90.3	92.1	89.3	90.1	89.0	90.7	91.8	92.7	91.5	90.0	91.5	89.8	91.5	90.92	-0.08	40.8	40.8	40.5	40.7	60.64	60.72	04:11
91.4	92.1	90.3	92.1	89.3	90.1	89.0	90.7	91.8	92.7	91.5	90.0	91.5	89.8	91.5	90.92	-0.08	40.8	40.8	40.5	40.7	60.76	60.86	04:12
91.4	92.1	90.3	92.1	89.3	90.1	89.0	90.7	91.8	92.8	91.5	90.0	91.5	89.8	91.5	90.92	-0.08	40.8	40.8	40.5	40.7	60.56	60.67	04:13
91.4	92.1	90.3	92.0	89.3	90.1	89.0	90.7	91.8	92.7	91.5	90.0	91.5	89.8	91.5	90.92	-0.09	40.8	40.9	40.5	40.7	60.68	60.78	04:14
91.4	92.1	90.3	92.0	89.3	90.1	89.0	90.7	91.8	92.7	91.5	90.0	91.5	89.8	91.5	90.92	-0.09	40.9	40.8	40.6	40.8	60.64	60.76	04:15
91.4	92.1	90.3	92.0	89.3	90.1	89.0	90.7	91.8	92.7	91.5	90.0	91.5	89.8	91.5	90.92	-0.10	40.9	40.8	40.5	40.8	60.76	60.88	04:16
91.4	92.1	90.3	92.0	89.3	90.1	89.0	90.7	91.8	92.7	91.5	90.0	91.5	89.8	91.5	90.92	-0.10	40.8	40.9	40.5	40.7	60.72	60.83	04:17
91.5	92.1	90.3	92.1	89.3	90.1	89.1	90.7	91.8	92.8	91.5	90.0	91.5	89.8	91.5	90.93	-0.10	40.8	40.8	40.5	40.7	60.76	60.85	04:18
91.4	92.1	90.3	92.1	89.3	90.1	89.1	90.7	91.8	92.8	91.5	90.1	91.5	89.8	91.5	90.94	-0.11	40.8	40.9	40.5	40.8	60.68	60.80	04:19
91.4	92.1	90.3	92.1	89.3	90.1	89.0	90.7	91.8	92.8	91.5	90.0	91.5	89.8	91.5	90.93	-0.11	40.8	40.8	40.5	40.7	60.72	60.82	04:20
91.4	92.1	90.3	92.0	89.3	90.1	89.0	90.6	91.8	92.8	91.5	90.0	91.5	89.8	91.5	90.91	-0.12	41.0	40.8	40.5	40.8	60.64	60.79	04:21
91.4	92.1	90.3	92.0	89.3	90.1	89.0	90.6	91.8	92.7	91.5	90.0	91.5	89.8	91.5	90.91	-0.12	40.8	40.9	40.5	40.7	60.56	60.69	04:22
91.4	92.1	90.2	92.0	89.3	90.1	89.0	90.6	91.7	92.7	91.5	90.0	91.4	89.7	91.5	90.89	-0.13	40.8	40.9	40.5	40.8	60.28	60.43	04:23
91.4	92.1	90.2	92.0	89.3	90.0	89.0	90.6	91.7	92.7	91.4	90.0	91.4	89.7	91.5	90.86	-0.13	40.8	40.8	40.6	40.7	60.48	60.61	04:24
91.4	92.0	90.2	92.0	89.3	90.0	88.9	90.6	91.7	92.7	91.4	90.0	91.4	89.7	91.4	90.85	-0.14	40.8	40.9	40.6	40.7	60.28	60.43	04:25
91.4	92.0	90.2	92.0	89.2	90.0	88.9	90.6	91.7	92.7	91.4	90.0	91.4	89.7	91.4	90.84	-0.15	40.8	40.8	40.5	40.7	60.60	60.73	04:26
91.4	92.0	90.2	92.0	89.2	90.0	88.9	90.6	91.7	92.7	91.4	90.0	91.4	89.7	91.4	90.84	-0.16	40.8	40.8	40.5	40.7	60.52	60.67	04:27
91.4	92.0	90.2	92.0	89.2	90.0	88.9	90.6	91.7	92.7	91.4	90.0	91.4	89.7	91.4	90.84	-0.17	40.7	40.9	40.6	40.7	60.72	60.86	04:28
91.3	92.0	90.2	92.0	89.2	90.0	88.9	90.6	91.7	92.7	91.4	90.0	91.4	89.7	91.4	90.83	-0.17	40.8	40.9	40.5	40.7	60.56	60.72	04:29
91.4	92.0	90.2	92.0	89.2	90.0	88.9	90.6	91.7	92.7	91.4	90.0	91.4	89.7	91.4	90.84	-0.18	40.8	40.9	40.5	40.7	60.68	60.83	04:30

COMMENTS _____

Tested By C L Pittledge Date 3-30-93 Reviewed By Frank A. Dewey Date 3-30-93

ATTACHMENT G

DATA FROM 24 CONDUCTOR TESTS

AMPACITY TEST. JOB NUMBER 93-0501. SAMPLE NUMBER 93-0501-01 DATA FILE 8C6GN001.001 05-04-1993 G-1

POSITION 1		POSITION 2		POSITION 3		POSITION AVERAGES			AVG		AMBIENT TEMPERATURE				AMPS		
T1mx	T1mn	T2mx	T2mn	T3mx	T3mn	T1avg	T2avg	T3avg	Twave	SLOPE	Tam1	Tam2	Tam3	Taav	It	I'	TIME
89.4	76.1	91.1	79.6	93.4	82.8	82.54	86.02	87.80	85.46	0.01	41.0	41.0	41.2	41.1	34.06	34.10	06:13
89.4	76.1	91.1	79.6	93.4	82.9	82.56	86.04	87.82	85.47	0.01	41.0	40.9	41.2	41.0	34.04	34.09	06:14
89.4	76.1	91.1	79.6	93.4	82.8	82.53	86.01	87.79	85.44	0.02	40.9	40.9	41.2	41.0	34.01	34.05	06:15
89.4	76.1	91.0	79.6	93.4	82.8	82.53	86.00	87.81	85.45	0.02	40.9	40.9	41.2	41.0	34.07	34.12	06:16
89.3	76.1	91.1	79.6	93.4	82.9	82.52	86.02	87.82	85.45	0.03	40.9	40.8	41.2	41.0	33.96	33.98	06:17
89.3	76.1	91.1	79.6	93.4	82.9	82.52	86.01	87.80	85.44	0.03	40.9	40.8	41.2	41.0	34.03	34.05	06:18
89.4	76.0	91.0	79.5	93.4	82.8	82.52	85.99	87.79	85.43	0.03	40.8	40.8	41.1	40.9	34.02	34.04	06:19
89.3	76.1	91.1	79.6	93.4	82.8	82.52	86.01	87.79	85.44	0.03	40.9	40.8	41.1	40.9	34.09	34.10	06:20
89.3	76.0	91.1	79.6	93.4	82.9	82.53	86.01	87.82	85.45	0.04	40.8	40.8	41.1	40.9	34.03	34.04	06:21
89.4	76.0	91.0	79.6	93.4	82.8	82.52	85.99	87.80	85.44	0.04	40.8	40.8	41.0	40.9	34.04	34.05	06:22
89.4	76.0	91.0	79.5	93.4	82.8	82.52	85.99	87.79	85.43	0.04	40.8	40.8	41.0	40.9	33.62	33.63	06:23
89.4	76.1	91.0	79.6	93.4	82.8	82.52	86.00	87.78	85.44	0.04	40.8	40.8	41.0	40.9	33.96	33.96	06:24
89.4	76.0	91.0	79.5	93.4	82.8	82.50	85.97	87.76	85.41	0.04	40.7	40.8	41.1	40.9	33.85	33.86	06:25
89.3	76.0	91.0	79.5	93.4	82.8	82.50	85.98	87.77	85.42	0.04	40.7	40.7	41.0	40.8	33.94	33.92	06:26
89.3	76.0	91.0	79.5	93.3	82.8	82.50	85.97	87.75	85.41	0.04	40.8	40.7	41.0	40.8	33.80	33.79	06:27
89.3	76.0	91.0	79.5	93.4	82.8	82.47	85.95	87.76	85.39	0.04	40.7	40.7	41.0	40.8	34.00	33.99	06:28
89.3	76.0	91.0	79.5	93.4	82.8	82.47	85.96	87.75	85.40	0.04	40.8	40.7	41.0	40.8	33.92	33.92	06:29
89.3	76.0	91.0	79.5	93.3	82.8	82.46	85.95	87.75	85.39	0.03	40.7	40.7	41.0	40.8	33.96	33.96	06:30
89.3	76.0	91.0	79.5	93.3	82.8	82.47	85.96	87.74	85.39	0.03	40.8	40.7	41.0	40.8	34.04	34.03	06:31
89.3	76.0	91.0	79.5	93.3	82.8	82.46	85.95	87.73	85.38	0.03	40.7	40.7	41.0	40.8	33.95	33.94	06:32
89.3	75.9	91.0	79.5	93.3	82.8	82.46	85.95	87.74	85.38	0.02	40.7	40.7	41.0	40.8	34.01	34.00	06:33
89.3	75.9	90.9	79.5	93.3	82.8	82.43	85.93	87.74	85.37	0.02	40.7	40.7	40.9	40.8	34.08	34.07	06:34
89.2	75.9	90.9	79.5	93.3	82.8	82.42	85.92	87.74	85.36	0.01	40.7	40.7	41.0	40.8	34.06	34.06	06:35
89.3	75.9	90.9	79.5	93.3	82.8	82.43	85.91	87.71	85.35	0.01	40.8	40.7	41.0	40.8	34.12	34.14	06:36
89.3	76.0	91.0	79.5	93.3	82.8	82.43	85.93	87.72	85.36	0.00	40.7	40.7	40.9	40.8	34.16	34.15	06:37
89.3	76.0	90.9	79.5	93.3	82.8	82.46	85.92	87.72	85.37	-0.00	40.7	40.6	40.9	40.7	34.19	34.17	06:38
89.3	76.0	91.0	79.5	93.3	82.7	82.45	85.93	87.71	85.36	-0.01	40.7	40.7	40.9	40.8	34.12	34.11	06:39
89.3	76.0	91.0	79.5	93.3	82.8	82.44	85.94	87.73	85.37	-0.01	40.7	40.7	40.9	40.8	34.10	34.08	06:40
89.3	76.0	91.0	79.5	93.3	82.7	82.44	85.92	87.70	85.35	-0.02	40.7	40.7	40.9	40.8	34.08	34.06	06:41
89.3	75.9	91.0	79.5	93.3	82.8	82.44	85.94	87.72	85.37	-0.02	40.7	40.7	40.9	40.8	34.04	34.02	06:42
89.3	75.9	90.9	79.5	93.3	82.7	82.43	85.91	87.71	85.35	-0.03	40.7	40.7	41.0	40.8	34.20	34.20	06:43
89.3	75.9	91.0	79.5	93.3	82.8	82.44	85.94	87.73	85.37	-0.03	40.7	40.7	40.9	40.8	34.24	34.22	06:44
89.3	75.9	90.9	79.5	93.3	82.8	82.45	85.92	87.73	85.37	-0.03	40.7	40.7	40.9	40.8	34.25	34.24	06:45
89.3	76.0	91.0	79.5	93.3	82.8	82.45	85.93	87.71	85.36	-0.04	40.7	40.7	41.0	40.8	34.24	34.22	06:46
89.3	75.9	90.9	79.5	93.3	82.8	82.45	85.93	87.73	85.37	-0.04	40.7	40.7	41.0	40.8	34.28	34.28	06:47
89.3	76.0	91.0	79.5	93.3	82.8	82.46	85.96	87.74	85.39	-0.04	40.7	40.7	40.9	40.8	34.18	34.15	06:48
89.3	75.9	90.9	79.5	93.4	82.8	82.44	85.92	87.74	85.36	-0.05	40.7	40.7	40.9	40.8	34.24	34.23	06:49
89.3	75.9	90.9	79.5	93.3	82.8	82.44	85.93	87.74	85.37	-0.05	40.7	40.7	41.0	40.8	34.17	34.16	06:50
89.3	75.9	91.0	79.5	93.3	82.8	82.44	85.93	87.72	85.36	-0.05	40.7	40.7	41.0	40.8	34.18	34.16	06:51
89.3	75.9	91.0	79.5	93.3	82.7	82.42	85.91	87.71	85.35	-0.06	40.7	40.7	41.0	40.8	34.34	34.33	06:52
89.3	75.9	90.9	79.5	93.3	82.8	82.43	85.93	87.74	85.37	-0.06	40.7	40.6	40.9	40.7	34.26	34.24	06:53
89.3	76.0	91.0	79.5	93.3	82.8	82.45	85.94	87.74	85.38	-0.06	40.7	40.6	40.9	40.7	34.35	34.31	06:54
89.3	75.9	91.0	79.5	93.3	82.8	82.46	85.93	87.73	85.37	-0.06	40.7	40.7	40.9	40.7	34.26	34.23	06:55
89.3	75.9	91.0	79.5	93.3	82.8	82.46	85.96	87.76	85.39	-0.06	40.7	40.7	40.9	40.7	34.32	34.29	06:56
89.3	75.9	91.0	79.5	93.3	82.8	82.44	85.93	87.72	85.36	-0.07	40.7	40.7	40.9	40.8	34.21	34.19	06:57
89.3	75.9	91.0	79.5	93.3	82.8	82.45	85.95	87.74	85.38	-0.07	40.7	40.7	40.9	40.8	34.25	34.22	06:58
89.3	75.9	91.0	79.5	93.3	82.8	82.45	85.95	87.73	85.38	-0.07	40.7	40.7	41.0	40.8	34.21	34.19	06:59
89.3	75.9	91.0	79.5	93.4	82.8	82.43	85.94	87.75	85.38	-0.07	40.7	40.7	41.1	40.8	34.30	34.29	07:00
89.3	76.0	91.0	79.5	93.3	82.8	82.44	85.94	87.73	85.37	-0.07	40.6	40.7	40.9	40.7	34.21	34.17	07:01
89.3	75.9	91.0	79.5	93.3	82.8	82.45	85.95	87.74	85.38	-0.07	40.7	40.7	40.9	40.7	34.25	34.21	07:02
89.3	75.9	91.0	79.5	93.4	82.8	82.43	85.95	87.75	85.38	-0.07	40.7	40.7	41.0	40.8	34.15	34.12	07:03
89.3	75.9	91.0	79.5	93.3	82.7	82.44	85.93	87.73	85.37	-0.07	40.7	40.7	41.0	40.8	34.20	34.18	07:04
89.3	75.9	91.0	79.5	93.3	82.8	82.43	85.95	87.74	85.37	-0.08	40.7	40.7	40.9	40.8	34.08	34.06	07:05
89.3	75.9	90.9	79.4	93.4	82.7	82.42	85.92	87.74	85.36	-0.08	40.6	40.5	40.9	40.7	34.20	34.18	07:06
89.3	75.9	91.0	79.4	93.3	82.8	82.43	85.93	87.74	85.37	-0.08	40.7	40.7	40.9	40.8	34.13	34.11	07:07
89.3	75.9	91.0	79.5	93.3	82.7	82.43	85.91	87.72	85.35	-0.08	40.7	40.7	40.9	40.8	34.22	34.20	07:08
89.3	75.9	91.0	79.5	93.3	82.7	82.42	85.92	87.72	85.35	-0.08	40.7	40.7	40.9	40.8	34.06	34.04	07:09
89.3	75.9	91.0	79.4	93.3	82.8	82.40	85.91	87.72	85.34	-0.09	40.7	40.7	40.9	40.8	34.21	34.19	07:10
89.3	75.9	91.0	79.4	93.4	82.8	82.42	85.92	87.74	85.36	-0.09	40.7	40.7	41.0	40.8	34.28	34.27	07:11
89.3	75.9	91.0	79.5	93.3	82.7	82.42	85.92	87.72	85.35	-0.09	40.7	40.7	41.0	40.8	34.33	34.32	07:12

COMMENTS _____

Tested By C.L. Rutledge Date 5-4-93 Reviewed By Frank A. Denney Date 5-5-93

AMPACITY TEST. JOB NUMBER 93-0501. SAMPLE NUMBER 93-0501-01 DATA FILE 8C6GN001.001 05-04-1993

POSITION 1		POSITION 2		POSITION 3		_POSITION AVERAGES_			AVG		AMBIENT TEMPERATURE				AMPS		
T1mx	T1mn	T2mx	T2mn	T3mx	T3mn	T1avg	T2avg	T3avg	Twave	SLOPE	Tam1	Tam2	Tam3	Taav	It	I'	TIME
[illegible].3	75.9	90.9	79.4	93.4	82.7	82.41	85.91	87.72	85.35	-0.09	40.7	40.7	41.0	40.8	34.29	34.29	07:13
[illegible].3	75.9	91.0	79.4	93.3	82.7	82.41	85.91	87.72	85.35	-0.08	40.7	40.7	41.0	40.8	34.39	34.36	07:14
89.3	75.9	91.0	79.4	93.3	82.7	82.44	85.93	87.73	85.37	-0.08	40.7	40.7	41.0	40.8	34.38	34.37	07:15
89.3	75.9	91.0	79.5	93.4	82.7	82.43	85.93	87.74	85.36	-0.07	40.7	40.7	40.9	40.8	34.41	34.39	07:16
89.3	75.9	91.0	79.4	93.4	82.7	82.44	85.93	87.73	85.37	-0.07	40.7	40.7	41.0	40.8	34.38	34.37	07:17
89.3	75.9	91.0	79.5	93.4	82.8	82.44	85.96	87.75	85.39	-0.06	40.8	40.8	41.0	40.8	34.41	34.40	07:18
89.3	75.9	91.0	79.4	93.3	82.7	82.44	85.93	87.73	85.37	-0.05	40.7	40.7	41.0	40.8	34.25	34.23	07:19
89.3	75.9	91.0	79.5	93.4	82.7	82.44	85.94	87.74	85.37	-0.05	40.7	40.7	41.0	40.8	34.32	34.30	07:20
89.3	75.9	91.0	79.4	93.4	82.7	82.43	85.93	87.74	85.36	-0.04	40.7	40.7	41.0	40.8	34.27	34.27	07:21
89.4	75.9	91.0	79.5	93.4	82.7	82.44	85.93	87.74	85.37	-0.04	40.8	40.7	41.0	40.8	34.25	34.24	07:22
89.3	75.9	91.0	79.4	93.4	82.8	82.44	85.93	87.75	85.38	-0.03	40.8	40.7	41.0	40.8	34.17	34.17	07:23
89.3	75.9	91.0	79.5	93.4	82.8	82.43	85.95	87.74	85.37	-0.02	40.8	40.7	41.0	40.8	34.28	34.27	07:24
89.3	75.9	91.0	79.5	93.4	82.8	82.43	85.96	87.75	85.38	-0.02	40.7	40.7	41.0	40.8	34.16	34.15	07:25
89.3	75.9	91.0	79.4	93.3	82.7	82.42	85.91	87.71	85.35	-0.01	40.7	40.7	41.0	40.8	34.23	34.22	07:26
89.3	75.9	91.0	79.4	93.4	82.7	82.42	85.91	87.71	85.35	-0.01	40.7	40.7	41.1	40.8	34.18	34.17	07:27
89.3	75.8	91.0	79.4	93.4	82.8	82.41	85.93	87.75	85.36	-0.01	40.8	40.7	41.0	40.8	34.24	34.23	07:28
89.3	75.9	91.0	79.4	93.4	82.7	82.41	85.92	87.74	85.36	-0.01	40.7	40.8	41.0	40.8	34.20	34.20	07:29
89.3	75.8	91.0	79.4	93.4	82.7	82.42	85.93	87.73	85.36	-0.01	40.7	40.7	41.0	40.8	34.24	34.23	07:30
89.3	75.9	91.0	79.4	93.3	82.7	82.40	85.92	87.71	85.34	-0.01	40.7	40.7	41.0	40.8	34.26	34.25	07:31
89.3	75.8	91.0	79.4	93.4	82.7	82.40	85.92	87.73	85.35	-0.01	40.7	40.7	41.0	40.8	34.25	34.25	07:32
89.3	75.8	91.0	79.4	93.4	82.7	82.39	85.90	87.73	85.34	-0.01	40.7	40.7	41.0	40.8	34.22	34.21	07:33
89.3	75.8	91.0	79.4	93.4	82.8	82.40	85.93	87.73	85.35	-0.01	40.7	40.7	41.0	40.8	34.22	34.20	07:34
89.3	75.8	91.0	79.4	93.3	82.7	82.38	85.89	87.70	85.32	-0.01	40.7	40.7	41.0	40.8	34.08	34.07	07:35
89.3	75.8	91.0	79.4	93.3	82.7	82.38	85.89	87.68	85.32	-0.02	40.7	40.7	41.0	40.8	34.18	34.16	07:36
89.3	75.8	91.0	79.4	93.3	82.7	82.38	85.90	87.69	85.32	-0.02	40.7	40.7	41.0	40.8	34.12	34.11	07:37
89.3	75.8	90.9	79.4	93.4	82.7	82.38	85.88	87.71	85.32	-0.03	40.7	40.7	40.9	40.8	34.25	34.25	07:38
89.3	75.8	91.0	79.4	93.4	82.7	82.39	85.90	87.72	85.34	-0.03	40.7	40.7	41.0	40.8	34.26	34.24	07:39
89.3	75.8	91.0	79.4	93.3	82.7	82.38	85.91	87.71	85.33	-0.03	40.6	40.7	41.0	40.8	34.22	34.20	07:40
89.3	75.8	91.0	79.4	93.3	82.7	82.39	85.91	87.69	85.33	-0.03	40.7	40.7	41.0	40.8	34.20	34.18	07:41
89.3	75.8	90.9	79.4	93.3	82.6	82.37	85.86	87.65	85.29	-0.04	40.6	40.7	41.0	40.8	34.21	34.20	07:42
89.3	75.8	90.9	79.4	93.3	82.7	82.37	85.87	87.69	85.31	-0.05	40.7	40.7	40.9	40.8	34.19	34.17	07:43
89.3	75.8	90.9	79.4	93.3	82.7	82.38	85.87	87.68	85.31	-0.05	40.7	40.7	40.9	40.8	34.24	34.22	07:44
89.3	75.8	90.9	79.4	93.3	82.6	82.36	85.87	87.68	85.30	-0.05	40.7	40.7	40.9	40.8	34.13	34.13	07:45
89.3	75.8	91.0	79.4	93.3	82.7	82.37	85.89	87.68	85.31	-0.06	40.7	40.7	41.0	40.8	34.26	34.25	07:46
[illegible].3	75.8	90.9	79.4	93.3	82.7	82.35	85.86	87.68	85.30	-0.06	40.7	40.7	40.9	40.8	34.16	34.16	07:47
[illegible].2	75.8	90.9	79.4	93.3	82.7	82.35	85.88	87.68	85.30	-0.06	40.7	40.7	40.9	40.8	34.20	34.19	07:48
89.3	75.8	90.9	79.4	93.3	82.7	82.36	85.86	87.68	85.30	-0.07	40.7	40.7	40.9	40.8	34.13	34.13	07:49
89.2	75.8	90.9	79.3	93.3	82.7	82.35	85.86	87.67	85.29	-0.07	40.7	40.7	40.9	40.8	34.17	34.16	07:50
89.3	75.8	90.9	79.4	93.3	82.6	82.33	85.83	87.65	85.27	-0.08	40.7	40.6	41.0	40.8	34.10	34.09	07:51
89.2	75.8	90.9	79.4	93.3	82.6	82.33	85.84	87.65	85.27	-0.08	40.7	40.7	41.0	40.8	34.16	34.17	07:52
89.2	75.8	90.9	79.4	93.3	82.6	82.32	85.84	87.65	85.27	-0.09	40.7	40.7	41.0	40.8	34.12	34.14	07:53
89.2	75.8	90.9	79.3	93.3	82.7	82.31	85.84	87.65	85.27	-0.09	40.7	40.7	40.9	40.8	34.13	34.13	07:54
89.2	75.8	90.9	79.3	93.3	82.6	82.30	85.81	87.64	85.25	-0.10	40.7	40.7	41.0	40.8	34.04	34.05	07:55
89.2	75.8	90.9	79.3	93.3	82.6	82.30	85.83	87.63	85.25	-0.10	40.7	40.7	41.0	40.8	34.04	34.06	07:56
89.2	75.8	90.9	79.3	93.2	82.6	82.32	85.82	87.60	85.25	-0.11	40.7	40.7	40.9	40.8	34.08	34.09	07:57
89.2	75.8	90.9	79.3	93.3	82.6	82.31	85.81	87.62	85.25	-0.12	40.7	40.7	40.9	40.8	34.16	34.16	07:58
89.2	75.7	90.9	79.3	93.3	82.6	82.29	85.80	87.60	85.23	-0.12	40.6	40.7	41.0	40.8	34.16	34.17	07:59
89.2	75.8	90.9	79.3	93.3	82.6	82.28	85.82	87.62	85.24	-0.13	40.7	40.7	40.9	40.8	34.17	34.18	08:00
89.2	75.8	90.9	79.3	93.2	82.6	82.29	85.79	87.59	85.22	-0.13	40.7	40.7	40.9	40.8	34.12	34.12	08:01
89.2	75.7	90.8	79.3	93.3	82.6	82.27	85.79	87.61	85.22	-0.14	40.7	40.7	41.0	40.8	34.14	34.16	08:02
89.2	75.7	90.8	79.3	93.3	82.6	82.28	85.79	87.61	85.23	-0.14	40.7	40.7	41.0	40.8	34.12	34.16	08:03
89.2	75.8	90.8	79.3	93.2	82.6	82.28	85.78	87.58	85.21	-0.15	40.7	40.7	40.9	40.8	34.12	34.14	08:04
89.2	75.8	90.9	79.3	93.2	82.6	82.29	85.80	87.59	85.23	-0.15	40.7	40.7	40.9	40.8	34.31	34.32	08:05
89.2	75.8	90.9	79.3	93.2	82.6	82.30	85.80	87.58	85.23	-0.16	40.7	40.7	41.0	40.8	34.32	34.33	08:06
89.2	75.7	90.8	79.3	93.3	82.6	82.28	85.79	87.60	85.22	-0.16	40.7	40.7	41.0	40.8	34.43	34.46	08:07
89.2	75.7	90.9	79.3	93.2	82.6	82.29	85.80	87.60	85.23	-0.17	40.7	40.7	41.0	40.8	34.41	34.43	08:08
89.2	75.7	90.9	79.3	93.3	82.6	82.30	85.82	87.63	85.25	-0.17	40.7	40.7	41.0	40.8	34.46	34.48	08:09
89.2	75.7	90.9	79.3	93.3	82.6	82.29	85.80	87.61	85.23	-0.17	40.7	40.7	41.0	40.8	34.45	34.48	08:10
89.2	75.8	90.9	79.3	93.3	82.6	82.30	85.82	87.63	85.25	-0.17	40.8	40.7	41.0	40.8	34.35	34.37	08:11
89.2	75.8	90.9	79.3	93.3	82.6	82.31	85.81	87.62	85.25	-0.17	40.8	40.8	41.0	40.9	34.35	34.39	08:12

COMMENTS _____

Tested By C L Rutledge Date 5-4-93 Reviewed By Leonard A. Dewey Date 5-5-93

AMPACITY TEST. JOB NUMBER 93-0501. SAMPLE NUMBER 93-0501-01 DATA FILE 0000001.001

POSITION 1		POSITION 2		POSITION 3		POSITION AVERAGES			AVG		AMBIENT TEMPERATURE				AMPS		
T1mx	T1mn	T2mx	T2mn	T3mx	T3mn	T1avg	T2avg	T3avg	Twave	SLOPE	Tam1	Tam2	Tam3	Taav	It	I'	TIME
89.2	75.7	90.8	79.3	93.3	82.6	82.29	85.80	87.62	85.24	-0.18	40.8	40.7	41.0	40.8	34.30	34.34	08:13
[illegible]	75.8	90.9	79.3	93.2	82.6	82.29	85.82	87.61	85.24	-0.18	40.8	40.7	41.0	40.8	34.31	34.33	08:14
[illegible]	75.8	90.9	79.3	93.2	82.6	82.29	85.80	87.60	85.23	-0.18	40.7	40.7	41.0	40.8	34.34	34.36	08:15
89.2	75.7	90.8	79.3	93.3	82.6	82.29	85.80	87.62	85.23	-0.18	40.7	40.7	41.0	40.8	34.29	34.32	08:16
89.2	75.7	90.9	79.3	93.3	82.7	82.29	85.82	87.63	85.24	-0.18	40.7	40.7	41.0	40.8	34.19	34.23	08:17
89.2	75.7	90.9	79.3	93.3	82.6	82.28	85.81	87.62	85.23	-0.17	40.7	40.7	41.0	40.8	34.20	34.23	08:18
89.2	75.7	90.9	79.3	93.2	82.6	82.27	85.81	87.61	85.23	-0.17	40.7	40.8	41.0	40.8	34.22	34.25	08:19
89.2	75.7	90.8	79.3	93.2	82.6	82.27	85.79	87.60	85.22	-0.17	40.8	40.8	41.1	40.9	34.29	34.34	08:20
89.2	75.7	90.8	79.3	93.2	82.6	82.28	85.77	87.58	85.21	-0.17	40.7	40.7	41.0	40.8	34.23	34.27	08:21
89.1	75.7	90.9	79.3	93.2	82.6	82.26	85.80	87.60	85.22	-0.17	40.7	40.7	41.0	40.8	34.24	34.27	08:22
89.2	75.7	90.8	79.3	93.2	82.6	82.26	85.77	87.59	85.20	-0.17	40.7	40.8	41.0	40.8	34.22	34.26	08:23
89.1	75.7	90.9	79.3	93.2	82.6	82.28	85.79	87.59	85.22	-0.16	40.8	40.7	41.0	40.8	34.31	34.34	08:24
89.1	75.7	90.8	79.3	93.3	82.6	82.25	85.76	87.59	85.20	-0.16	40.7	40.8	41.0	40.8	34.32	34.37	08:25
89.1	75.7	90.8	79.3	93.3	82.6	82.24	85.77	87.59	85.20	-0.16	40.8	40.8	41.0	40.8	34.29	34.34	08:26
89.2	75.7	90.8	79.3	93.3	82.6	82.28	85.79	87.60	85.22	-0.16	40.7	40.8	41.0	40.8	34.32	34.36	08:27
89.2	75.7	90.8	79.3	93.2	82.6	82.27	85.78	87.59	85.21	-0.15	40.7	40.8	41.1	40.9	34.28	34.33	08:28
89.2	75.7	90.8	79.3	93.3	82.6	82.27	85.78	87.60	85.22	-0.15	40.8	40.8	41.0	40.8	34.36	34.41	08:29
89.1	75.7	90.8	79.3	93.2	82.6	82.25	85.79	87.60	85.21	-0.14	40.8	40.8	41.0	40.8	34.20	34.25	08:30
89.2	75.7	90.9	79.3	93.2	82.6	82.28	85.80	87.60	85.23	-0.14	40.7	40.7	41.0	40.8	34.31	34.35	08:31
89.2	75.8	90.9	79.3	93.2	82.6	82.28	85.79	87.60	85.22	-0.13	40.8	40.7	41.0	40.8	34.18	34.21	08:32
89.2	75.7	90.8	79.3	93.3	82.6	82.26	85.78	87.60	85.21	-0.13	40.7	40.7	41.0	40.8	34.26	34.31	08:33
89.2	75.7	90.8	79.3	93.3	82.6	82.26	85.78	87.61	85.22	-0.12	40.8	40.7	41.0	40.8	34.24	34.29	08:34
89.1	75.7	90.8	79.3	93.2	82.6	82.26	85.78	87.58	85.21	-0.12	40.7	40.8	41.0	40.8	34.27	34.32	08:35
89.2	75.7	90.8	79.3	93.2	82.5	82.26	85.77	87.56	85.20	-0.12	40.7	40.8	41.0	40.8	34.21	34.25	08:36
89.2	75.7	90.8	79.3	93.2	82.5	82.26	85.75	87.57	85.19	-0.12	40.8	40.8	41.0	40.9	34.14	34.21	08:37
89.1	75.7	90.8	79.3	93.2	82.6	82.23	85.77	87.59	85.20	-0.12	40.8	40.8	41.1	40.9	34.18	34.24	08:38
89.2	75.7	90.8	79.2	93.2	82.6	82.24	85.75	87.57	85.18	-0.11	40.8	40.8	41.2	40.9	34.14	34.22	08:39
89.1	75.7	90.8	79.3	93.2	82.6	82.24	85.75	87.55	85.18	-0.11	40.7	40.8	41.0	40.8	34.12	34.16	08:40
89.1	75.7	90.8	79.3	93.2	82.6	82.23	85.75	87.57	85.18	-0.11	40.8	40.8	41.0	40.8	34.17	34.22	08:41
89.1	75.7	90.8	79.3	93.2	82.5	82.23	85.75	87.55	85.18	-0.11	40.7	40.8	41.0	40.8	34.20	34.25	08:42
89.2	75.7	90.8	79.2	93.2	82.5	82.23	85.73	87.54	85.17	-0.11	40.8	40.7	41.2	40.9	34.26	34.33	08:43
89.1	75.7	90.8	79.3	93.2	82.5	82.23	85.73	87.54	85.17	-0.10	40.7	40.8	41.0	40.8	34.19	34.25	08:44
89.1	75.6	90.8	79.2	93.2	82.6	82.22	85.72	87.54	85.16	-0.10	40.8	40.8	41.0	40.9	34.26	34.33	08:45
89.1	75.7	90.8	79.2	93.2	82.5	82.22	85.74	87.53	85.16	-0.10	40.8	40.8	41.0	40.9	34.23	34.29	08:46
89.1	75.6	90.8	79.2	93.2	82.6	82.21	85.72	87.53	85.16	-0.10	40.7	40.8	41.0	40.8	34.18	34.24	08:47
[illegible]	75.7	90.8	79.2	93.2	82.5	82.23	85.72	87.54	85.16	-0.10	40.7	40.8	41.1	40.9	34.30	34.36	08:48
[illegible]	75.7	90.8	79.2	93.2	82.5	82.21	85.73	87.55	85.16	-0.10	40.8	40.8	41.1	40.9	34.31	34.38	08:49
89.1	75.6	90.8	79.2	93.2	82.5	82.21	85.71	87.53	85.15	-0.10	40.8	40.8	41.0	40.8	34.23	34.30	08:50
89.1	75.7	90.8	79.2	93.2	82.6	82.21	85.74	87.54	85.16	-0.10	40.8	40.8	41.0	40.8	34.24	34.30	08:51
89.1	75.7	90.8	79.2	93.2	82.5	82.20	85.72	87.53	85.15	-0.10	40.8	40.8	41.2	40.9	34.23	34.31	08:52
89.1	75.7	90.8	79.2	93.2	82.5	82.20	85.70	87.51	85.14	-0.10	40.8	40.8	41.1	40.9	34.18	34.26	08:53
89.1	75.6	90.8	79.2	93.2	82.5	82.20	85.70	87.52	85.14	-0.10	40.8	40.8	41.1	40.9	34.22	34.30	08:54
89.1	75.6	90.8	79.2	93.1	82.5	82.19	85.71	87.51	85.14	-0.10	40.8	40.8	41.1	40.9	34.24	34.31	08:55
89.1	75.6	90.7	79.2	93.2	82.5	82.19	85.69	87.51	85.13	-0.10	40.7	40.8	41.1	40.9	34.30	34.39	08:56
89.1	75.7	90.8	79.2	93.2	82.5	82.19	85.70	87.52	85.14	-0.11	40.8	40.8	41.1	40.9	34.25	34.32	08:57
89.1	75.7	90.8	79.2	93.2	82.5	82.20	85.71	87.51	85.14	-0.11	40.8	40.7	41.0	40.9	34.21	34.27	08:58
89.1	75.7	90.8	79.2	93.1	82.5	82.19	85.70	87.48	85.12	-0.11	40.8	40.8	41.0	40.9	34.23	34.30	08:59
89.1	75.6	90.8	79.2	93.2	82.5	82.19	85.68	87.50	85.13	-0.12	40.8	40.8	41.0	40.9	34.22	34.31	09:00
89.1	75.7	90.8	79.2	93.1	82.5	82.20	85.70	87.49	85.13	-0.12	40.8	40.8	41.1	40.9	34.16	34.24	09:01
89.1	75.7	90.8	79.2	93.1	82.5	82.19	85.69	87.50	85.13	-0.12	40.8	40.8	41.1	40.9	34.29	34.38	09:02
89.1	75.6	90.7	79.2	93.1	82.5	82.17	85.68	87.49	85.11	-0.13	40.8	40.8	41.1	40.9	34.16	34.25	09:03
89.0	75.6	90.8	79.2	93.1	82.5	82.17	85.69	87.49	85.11	-0.13	40.9	40.9	41.1	40.9	34.23	34.33	09:04
89.1	75.6	90.8	79.2	93.1	82.5	82.18	85.68	87.48	85.11	-0.14	40.8	40.8	41.1	40.9	34.13	34.23	09:05
89.1	75.6	90.7	79.2	93.1	82.5	82.18	85.68	87.50	85.12	-0.14	40.8	40.8	41.2	40.9	34.20	34.31	09:06
89.0	75.6	90.8	79.2	93.1	82.5	82.16	85.69	87.50	85.11	-0.14	40.8	40.8	41.1	40.9	34.23	34.33	09:07
89.1	75.6	90.8	79.2	93.1	82.5	82.18	85.69	87.49	85.12	-0.15	40.9	40.9	41.1	41.0	34.30	34.40	09:08
89.1	75.6	90.7	79.2	93.2	82.5	82.15	85.67	87.51	85.11	-0.15	40.9	40.8	41.1	40.9	34.22	34.34	09:09
89.0	75.6	90.8	79.2	93.1	82.5	82.17	85.69	87.49	85.12	-0.15	40.8	40.8	41.1	40.9	34.30	34.40	09:10
89.1	75.6	90.7	79.2	93.1	82.5	82.15	85.66	87.50	85.10	-0.15	40.9	40.8	41.2	41.0	34.22	34.35	09:11
89.0	75.6	90.8	79.2	93.1	82.5	82.16	85.69	87.50	85.12	-0.15	40.8	40.9	41.2	41.0	34.26	34.36	09:12

COMMENTS _____

Tested By CL Rutledge Date 5-4-93 Reviewed By Frank A. Denney Date 5-5-93

AMPACITY TEST. JOB NUMBER 93-0501. SAMPLE NUMBER 93-0501-02 DATA FILE 8C6GN002.001 05-05-1993

POSITION 1		POSITION 2		POSITION 3		_POSITION AVERAGES_			AVG		AMBIENT TEMPERATURE				AMPS		
T1mx	T1mn	T2mx	T2mn	T3mx	T3mn	T1avg	T2avg	T3avg	Twave	SLOPE	Tam1	Tam2	Tam3	Taav	It	I'	TIME
90.6	77.8	89.9	79.6	92.3	82.5	83.56	83.59	86.17	84.44	-0.01	40.6	40.6	40.8	40.7	33.33	33.59	13:31
90.7	77.9	89.8	79.5	92.3	82.5	83.57	83.57	86.15	84.43	-0.01	40.5	40.6	40.7	40.6	33.15	33.43	13:32
90.7	77.9	89.8	79.5	92.3	82.5	83.56	83.57	86.19	84.44	-0.02	40.6	40.6	40.8	40.7	33.27	33.54	13:33
90.6	77.8	89.9	79.5	92.3	82.5	83.56	83.58	86.17	84.44	-0.02	40.5	40.5	40.8	40.7	33.23	33.50	13:34
90.6	77.9	89.9	79.6	92.3	82.5	83.57	83.60	86.17	84.45	-0.03	40.6	40.5	40.7	40.6	33.28	33.52	13:35
90.6	77.9	89.9	79.6	92.3	82.5	83.57	83.60	86.17	84.45	-0.03	40.6	40.5	40.8	40.6	33.30	33.54	13:36
90.7	77.9	89.8	79.6	92.3	82.5	83.57	83.60	86.17	84.44	-0.04	40.6	40.5	40.7	40.6	33.39	33.64	13:37
90.7	77.9	89.8	79.6	92.3	82.5	83.57	83.60	86.18	84.45	-0.04	40.6	40.6	40.7	40.6	33.36	33.62	13:38
90.7	77.9	89.8	79.6	92.3	82.5	83.58	83.60	86.19	84.45	-0.04	40.6	40.5	40.8	40.6	33.32	33.58	13:39
90.6	77.8	89.9	79.6	92.3	82.6	83.57	83.61	86.21	84.47	-0.05	40.6	40.5	40.7	40.6	33.22	33.46	13:40
90.6	77.8	89.8	79.6	92.3	82.5	83.57	83.58	86.20	84.45	-0.05	40.6	40.5	40.7	40.6	33.31	33.56	13:41
90.7	77.9	89.8	79.6	92.3	82.6	83.58	83.60	86.21	84.46	-0.05	40.6	40.5	40.7	40.6	33.25	33.50	13:42
90.7	77.9	89.8	79.6	92.3	82.5	83.57	83.60	86.19	84.45	-0.05	40.6	40.5	40.8	40.6	33.24	33.49	13:43
90.7	77.9	89.8	79.6	92.3	82.5	83.57	83.59	86.17	84.44	-0.06	40.5	40.5	40.7	40.6	33.23	33.47	13:44
90.6	77.8	89.8	79.5	92.3	82.5	83.57	83.58	86.19	84.45	-0.06	40.6	40.5	40.7	40.6	33.17	33.41	13:45
90.7	77.9	89.8	79.6	92.4	82.5	83.58	83.60	86.20	84.46	-0.06	40.6	40.5	40.7	40.6	33.24	33.49	13:46
90.7	77.9	89.8	79.5	92.3	82.5	83.57	83.58	86.17	84.44	-0.06	40.5	40.4	40.6	40.5	33.27	33.50	13:47
90.6	77.9	89.9	79.6	92.3	82.5	83.57	83.61	86.20	84.46	-0.06	40.5	40.4	40.7	40.6	33.31	33.52	13:48
90.7	77.9	89.8	79.6	92.3	82.5	83.57	83.59	86.19	84.45	-0.06	40.5	40.5	40.7	40.6	33.29	33.53	13:49
90.7	77.9	89.8	79.6	92.4	82.5	83.58	83.60	86.21	84.46	-0.07	40.5	40.4	40.7	40.5	33.36	33.59	13:50
90.7	77.9	89.9	79.6	92.3	82.5	83.60	83.63	86.19	84.47	-0.06	40.5	40.5	40.7	40.6	33.31	33.53	13:51
90.7	77.9	89.9	79.6	92.3	82.5	83.60	83.62	86.21	84.48	-0.06	40.5	40.5	40.7	40.5	33.33	33.54	13:52
90.7	77.9	89.9	79.6	92.3	82.6	83.61	83.64	86.23	84.49	-0.06	40.5	40.5	40.7	40.6	33.33	33.54	13:53
90.7	77.9	89.9	79.6	92.4	82.6	83.59	83.62	86.24	84.48	-0.06	40.5	40.5	40.7	40.6	33.30	33.53	13:54
90.7	77.9	89.9	79.6	92.4	82.6	83.60	83.63	86.23	84.49	-0.06	40.5	40.5	40.7	40.5	33.30	33.52	13:55
90.7	77.9	89.9	79.6	92.3	82.6	83.60	83.63	86.24	84.49	-0.05	40.5	40.4	40.7	40.5	33.31	33.52	13:56
90.7	77.9	89.9	79.6	92.4	82.6	83.61	83.63	86.25	84.50	-0.05	40.5	40.4	40.6	40.5	33.34	33.54	13:57
90.7	77.9	89.8	79.6	92.4	82.6	83.61	83.63	86.23	84.49	-0.05	40.5	40.4	40.6	40.5	33.34	33.56	13:58
90.7	77.9	89.9	79.6	92.4	82.6	83.62	83.64	86.25	84.50	-0.04	40.5	40.4	40.7	40.5	33.32	33.53	13:59
90.7	77.9	89.9	79.6	92.3	82.6	83.61	83.64	86.22	84.49	-0.04	40.5	40.4	40.6	40.5	33.24	33.44	14:00
90.7	77.9	89.9	79.6	92.4	82.5	83.62	83.64	86.23	84.49	-0.04	40.5	40.4	40.6	40.5	33.22	33.43	14:01
90.7	77.9	89.9	79.6	92.4	82.6	83.62	83.64	86.25	84.50	-0.03	40.5	40.4	40.6	40.5	33.24	33.44	14:02
90.7	77.9	89.9	79.7	92.3	82.6	83.62	83.65	86.24	84.50	-0.03	40.5	40.4	40.6	40.5	33.30	33.49	14:03
90.7	77.9	89.9	79.6	92.3	82.5	83.62	83.65	86.21	84.49	-0.03	40.5	40.4	40.6	40.5	33.20	33.39	14:04
90.7	77.9	89.9	79.6	92.4	82.6	83.61	83.63	86.25	84.50	-0.02	40.5	40.4	40.6	40.5	33.22	33.42	14:05
90.7	77.9	89.9	79.6	92.4	82.6	83.60	83.63	86.25	84.50	-0.02	40.4	40.4	40.6	40.5	33.28	33.48	14:06
90.7	77.9	89.9	79.6	92.4	82.6	83.61	83.64	86.26	84.51	-0.01	40.5	40.4	40.6	40.5	33.33	33.52	14:07
90.7	77.9	89.9	79.6	92.3	82.5	83.62	83.65	86.23	84.50	-0.01	40.5	40.5	40.6	40.5	33.38	33.58	14:08
90.7	77.9	89.9	79.6	92.4	82.6	83.63	83.65	86.28	84.52	-0.01	40.4	40.3	40.5	40.4	33.42	33.58	14:09
90.8	78.0	89.9	79.6	92.4	82.6	83.64	83.67	86.26	84.52	0.00	40.4	40.4	40.5	40.5	33.40	33.58	14:10
90.7	78.0	89.9	79.6	92.4	82.6	83.65	83.67	86.28	84.53	0.01	40.4	40.4	40.6	40.4	33.42	33.59	14:11
90.7	77.9	89.9	79.7	92.4	82.6	83.66	83.68	86.29	84.54	0.01	40.4	40.4	40.5	40.4	33.36	33.53	14:12
90.7	77.9	89.9	79.7	92.4	82.6	83.65	83.68	86.28	84.54	0.02	40.4	40.4	40.5	40.5	33.31	33.48	14:13
90.7	78.0	89.9	79.7	92.4	82.6	83.65	83.68	86.26	84.53	0.03	40.4	40.3	40.5	40.4	33.34	33.51	14:14
90.8	78.0	89.9	79.7	92.4	82.6	83.66	83.67	86.27	84.54	0.04	40.4	40.3	40.5	40.4	33.20	33.37	14:15
90.7	77.9	90.0	79.7	92.4	82.6	83.64	83.67	86.26	84.52	0.04	40.4	40.3	40.5	40.4	33.29	33.43	14:16
90.7	77.9	89.9	79.7	92.4	82.6	83.63	83.68	86.28	84.53	0.05	40.4	40.3	40.5	40.4	33.25	33.41	14:17
90.7	78.0	89.9	79.7	92.4	82.6	83.66	83.68	86.29	84.54	0.05	40.4	40.3	40.6	40.4	33.36	33.53	14:18
90.7	77.9	89.9	79.6	92.4	82.6	83.67	83.68	86.28	84.54	0.06	40.4	40.3	40.5	40.4	33.30	33.44	14:19
90.8	78.0	89.9	79.6	92.4	82.6	83.66	83.67	86.27	84.53	0.07	40.4	40.3	40.5	40.4	33.28	33.45	14:20
90.7	77.9	90.0	79.7	92.4	82.6	83.67	83.69	86.29	84.55	0.07	40.4	40.3	40.5	40.4	33.31	33.45	14:21
90.8	78.0	89.9	79.6	92.4	82.6	83.65	83.68	86.29	84.54	0.08	40.4	40.4	40.5	40.4	33.21	33.37	14:22
90.7	78.0	89.9	79.7	92.4	82.6	83.66	83.68	86.26	84.53	0.09	40.4	40.3	40.5	40.4	33.26	33.41	14:23
90.7	77.9	90.0	79.7	92.4	82.6	83.64	83.67	86.30	84.54	0.09	40.3	40.3	40.4	40.3	33.20	33.33	14:24
90.7	77.9	90.0	79.7	92.4	82.6	83.65	83.69	86.29	84.54	0.10	40.4	40.3	40.5	40.4	33.14	33.28	14:25
90.8	77.9	89.9	79.6	92.4	82.6	83.65	83.67	86.28	84.54	0.10	40.3	40.3	40.5	40.4	33.07	33.21	14:26
90.7	77.9	89.9	79.7	92.4	82.6	83.63	83.67	86.27	84.52	0.11	40.3	40.3	40.5	40.4	33.07	33.21	14:27
90.7	77.9	90.0	79.7	92.4	82.6	83.62	83.67	86.28	84.52	0.11	40.3	40.2	40.4	40.3	33.13	33.24	14:28
90.7	77.9	89.9	79.6	92.4	82.6	83.64	83.67	86.29	84.53	0.12	40.3	40.3	40.5	40.3	33.29	33.42	14:29
90.7	77.9	90.0	79.7	92.4	82.6	83.64	83.68	86.28	84.53	0.12	40.3	40.2	40.4	40.3	33.27	33.39	14:30

COMMENTS _____

Tested By C.L. Rutledge Date 5-5-93 Reviewed By Frank G. Demez Date 5-5-93

AMPACITY TEST. JOB NUMBER 93-0501. SAMPLE NUMBER 93-0501-02 DATA FILE BC6GN002.001 05-05-1993 G-5

POSITION 1		POSITION 2		POSITION 3		_POSITION AVERAGES_			AVG		AMBIENT TEMPERATURE				AMPS		
T1mx	T1mn	T2mx	T2mn	T3mx	T3mn	T1avg	T2avg	T3avg	Twave	SLOPE	Tam1	Tam2	Tam3	Taav	It	I'	TIME
90.7	77.9	89.9	79.6	92.4	82.6	83.63	83.65	86.28	84.52	0.12	40.3	40.2	40.4	40.3	33.30	33.44	14:31
90.7	77.9	89.9	79.6	92.4	82.6	83.62	83.66	86.29	84.52	0.11	40.3	40.3	40.4	40.4	33.26	33.40	14:32
90.7	77.9	90.0	79.7	92.4	82.6	83.64	83.68	86.29	84.54	0.11	40.3	40.3	40.4	40.4	33.26	33.38	14:33
90.7	77.9	90.0	79.7	92.4	82.6	83.65	83.69	86.28	84.54	0.11	40.3	40.2	40.4	40.3	33.26	33.37	14:34
90.7	77.9	90.0	79.7	92.4	82.6	83.64	83.68	86.29	84.54	0.11	40.3	40.2	40.5	40.3	33.30	33.41	14:35
90.7	77.9	90.0	79.7	92.4	82.6	83.61	83.67	86.28	84.52	0.10	40.3	40.3	40.5	40.3	33.33	33.46	14:36
90.8	77.9	89.9	79.6	92.4	82.6	83.64	83.67	86.29	84.53	0.10	40.3	40.2	40.4	40.3	33.28	33.40	14:37
90.8	77.9	89.9	79.7	92.4	82.6	83.64	83.68	86.29	84.54	0.10	40.3	40.2	40.5	40.3	33.28	33.41	14:38
90.7	78.0	89.9	79.6	92.4	82.6	83.65	83.66	86.28	84.53	0.10	40.3	40.3	40.5	40.3	33.17	33.31	14:39
90.7	77.9	89.9	79.6	92.4	82.6	83.65	83.66	86.29	84.53	0.09	40.3	40.2	40.4	40.3	33.27	33.38	14:40
90.7	77.9	89.9	79.6	92.4	82.6	83.62	83.64	86.28	84.51	0.09	40.3	40.2	40.5	40.3	33.23	33.38	14:41
90.7	77.9	89.9	79.6	92.3	82.6	83.65	83.66	86.26	84.52	0.08	40.3	40.2	40.5	40.3	33.30	33.42	14:42
90.7	77.9	89.9	79.7	92.4	82.7	83.64	83.67	86.30	84.53	0.08	40.3	40.2	40.4	40.3	33.18	33.30	14:43
90.7	77.9	90.0	79.7	92.4	82.6	83.64	83.68	86.28	84.53	0.08	40.3	40.3	40.5	40.4	33.28	33.42	14:44
90.7	77.9	89.9	79.6	92.4	82.6	83.62	83.66	86.29	84.53	0.07	40.3	40.2	40.5	40.3	33.20	33.34	14:45
90.7	77.9	89.9	79.6	92.4	82.6	83.64	83.65	86.28	84.52	0.07	40.3	40.3	40.5	40.3	33.20	33.35	14:46
90.7	77.9	89.9	79.7	92.4	82.6	83.64	83.67	86.28	84.53	0.06	40.3	40.3	40.4	40.3	33.14	33.27	14:47
90.7	77.9	89.9	79.6	92.4	82.6	83.63	83.66	86.28	84.52	0.06	40.3	40.3	40.4	40.3	33.11	33.25	14:48
90.7	77.9	89.9	79.6	92.4	82.6	83.63	83.64	86.26	84.51	0.05	40.3	40.2	40.5	40.3	33.22	33.37	14:49
90.7	77.9	89.9	79.7	92.4	82.6	83.62	83.66	86.25	84.51	0.04	40.3	40.2	40.5	40.3	33.12	33.24	14:50
90.7	77.9	89.9	79.7	92.4	82.6	83.62	83.67	86.26	84.52	0.04	40.3	40.2	40.4	40.3	33.29	33.41	14:51
90.7	77.9	89.9	79.6	92.4	82.6	83.63	83.65	86.28	84.52	0.03	40.3	40.2	40.5	40.3	33.21	33.35	14:52
90.7	77.9	89.9	79.7	92.4	82.6	83.63	83.66	86.27	84.52	0.03	40.3	40.3	40.5	40.4	33.21	33.35	14:53
90.7	77.9	89.9	79.6	92.4	82.6	83.64	83.64	86.24	84.50	0.02	40.3	40.2	40.4	40.3	33.32	33.46	14:54
90.7	77.9	89.9	79.6	92.4	82.6	83.62	83.63	86.25	84.50	0.02	40.3	40.2	40.4	40.3	33.29	33.45	14:55
90.7	77.9	89.9	79.7	92.4	82.6	83.64	83.67	86.28	84.53	0.02	40.4	40.3	40.5	40.4	33.31	33.45	14:56
90.7	77.9	89.9	79.7	92.4	82.6	83.62	83.67	86.26	84.51	0.01	40.3	40.3	40.5	40.4	33.30	33.43	14:57
90.7	77.9	89.9	79.6	92.4	82.6	83.62	83.66	86.29	84.52	0.01	40.3	40.3	40.5	40.4	33.29	33.43	14:58
90.7	77.9	89.9	79.6	92.4	82.6	83.64	83.66	86.29	84.53	0.01	40.3	40.3	40.5	40.4	33.23	33.37	14:59
90.7	77.9	89.9	79.6	92.4	82.6	83.62	83.64	86.27	84.51	0.00	40.3	40.2	40.5	40.3	33.24	33.39	15:00
90.7	77.9	89.9	79.6	92.4	82.6	83.63	83.66	86.26	84.52	0.00	40.3	40.2	40.5	40.3	33.18	33.32	15:01
90.7	77.9	89.9	79.6	92.4	82.7	83.61	83.66	86.31	84.53	-0.00	40.3	40.3	40.4	40.3	33.27	33.39	15:02
90.7	78.0	89.9	79.6	92.4	82.6	83.64	83.65	86.26	84.52	-0.00	40.3	40.3	40.5	40.4	33.19	33.34	15:03
90.7	78.0	89.9	79.7	92.4	82.6	83.65	83.66	86.27	84.53	-0.01	40.3	40.3	40.5	40.4	33.26	33.40	15:04
90.7	77.9	89.9	79.6	92.4	82.6	83.62	83.65	86.29	84.52	-0.01	40.3	40.3	40.5	40.4	33.28	33.43	15:05
90.7	77.9	90.0	79.7	92.4	82.6	83.61	83.67	86.28	84.52	-0.01	40.3	40.2	40.5	40.3	33.24	33.36	15:06
90.7	77.9	89.9	79.6	92.4	82.6	83.63	83.66	86.29	84.53	-0.02	40.3	40.3	40.5	40.3	33.19	33.32	15:07
90.7	77.9	89.9	79.7	92.4	82.6	83.64	83.66	86.26	84.52	-0.02	40.3	40.2	40.4	40.3	33.24	33.36	15:08
90.7	77.9	89.9	79.6	92.4	82.6	83.63	83.65	86.28	84.52	-0.02	40.3	40.2	40.5	40.3	33.19	33.33	15:09
90.7	77.9	89.9	79.7	92.4	82.6	83.62	83.65	86.26	84.51	-0.02	40.3	40.3	40.5	40.4	33.16	33.31	15:10
90.7	77.9	89.9	79.6	92.4	82.6	83.63	83.64	86.28	84.52	-0.02	40.3	40.3	40.4	40.3	33.26	33.40	15:11
90.7	77.9	89.9	79.6	92.4	82.6	83.62	83.65	86.29	84.52	-0.02	40.3	40.3	40.4	40.3	33.14	33.28	15:12
90.7	77.9	89.9	79.6	92.4	82.6	83.62	83.65	86.30	84.52	-0.02	40.3	40.2	40.4	40.3	33.25	33.39	15:13
90.7	77.9	89.9	79.6	92.4	82.6	83.62	83.65	86.28	84.51	-0.02	40.3	40.2	40.4	40.3	33.16	33.30	15:14
90.7	77.9	89.9	79.7	92.4	82.6	83.62	83.65	86.25	84.51	-0.02	40.3	40.2	40.4	40.3	33.28	33.40	15:15
90.7	77.9	89.9	79.6	92.4	82.6	83.62	83.63	86.25	84.50	-0.03	40.3	40.2	40.5	40.3	33.26	33.41	15:16
90.7	77.9	89.9	79.7	92.4	82.6	83.62	83.66	86.28	84.52	-0.03	40.3	40.2	40.4	40.3	33.20	33.32	15:17
90.7	77.9	89.9	79.7	92.4	82.6	83.63	83.67	86.28	84.53	-0.02	40.3	40.2	40.5	40.3	33.24	33.36	15:18
90.7	77.9	89.9	79.6	92.4	82.6	83.58	83.62	86.30	84.50	-0.02	40.3	40.2	40.4	40.3	33.12	33.25	15:19
90.7	77.9	89.9	79.6	92.4	82.6	83.61	83.66	86.29	84.52	-0.02	40.3	40.1	40.4	40.3	33.14	33.25	15:20
90.7	77.9	89.9	79.7	92.4	82.6	83.61	83.66	86.28	84.51	-0.02	40.3	40.2	40.4	40.3	33.16	33.28	15:21
90.7	77.9	89.9	79.6	92.4	82.6	83.59	83.63	86.26	84.50	-0.02	40.3	40.2	40.4	40.3	33.17	33.32	15:22
90.7	77.9	89.9	79.6	92.4	82.6	83.59	83.64	86.28	84.51	-0.02	40.3	40.2	40.4	40.3	33.19	33.31	15:23
90.7	77.9	89.9	79.6	92.4	82.6	83.59	83.63	86.28	84.50	-0.02	40.3	40.2	40.4	40.3	33.29	33.42	15:24
90.7	77.9	89.8	79.6	92.4	82.6	83.61	83.62	86.24	84.49	-0.02	40.3	40.2	40.5	40.3	33.22	33.37	15:25
90.7	77.9	89.9	79.6	92.4	82.6	83.61	83.63	86.24	84.49	-0.02	40.3	40.3	40.5	40.3	33.30	33.45	15:26
90.7	77.9	89.9	79.6	92.4	82.6	83.60	83.64	86.25	84.50	-0.03	40.3	40.2	40.4	40.3	33.17	33.29	15:27
90.6	77.9	89.9	79.6	92.4	82.6	83.59	83.63	86.25	84.49	-0.03	40.3	40.1	40.4	40.3	33.24	33.35	15:28
90.7	77.9	89.9	79.6	92.4	82.6	83.60	83.63	86.27	84.50	-0.03	40.3	40.1	40.4	40.3	33.24	33.36	15:29
90.7	77.9	89.8	79.6	92.4	82.6	83.60	83.63	86.28	84.50	-0.03	40.3	40.2	40.4	40.3	33.20	33.33	15:30

COMMENTS _____

Tested By C L Lutledge Date 5-5-93 Reviewed By Frank A. Dewey Date 5-5-93

AMPACITY TEST. JOB NUMBER 93-0501. SAMPLE NUMBER 93-0501-02 DATA FILE BC6GN002.001 05-05-1993

POSITION 1		POSITION 2		POSITION 3		_POSITION AVERAGES_			AVG		AMBIENT TEMPERATURE				AMPS		
T1mx	T1mn	T2mx	T2mn	T3mx	T3mn	T1avg	T2avg	T3avg	Twave	SLOPE	Tam1	Tam2	Tam3	Taav	It	I'	TIME
[illegible].7	77.9	89.9	79.6	92.3	82.6	83.60	83.63	86.24	84.49	-0.03	40.3	40.2	40.4	40.3	33.23	33.35	15:31
90.7	77.9	89.9	79.6	92.4	82.6	83.61	83.64	86.28	84.51	-0.03	40.3	40.2	40.4	40.3	33.27	33.41	15:32
90.7	77.9	89.9	79.6	92.4	82.6	83.60	83.65	86.28	84.51	-0.03	40.3	40.2	40.3	40.3	33.18	33.29	15:33
90.7	77.9	89.9	79.6	92.4	82.6	83.60	83.64	86.25	84.50	-0.03	40.3	40.2	40.4	40.3	33.27	33.39	15:34
90.7	77.9	89.9	79.6	92.4	82.6	83.59	83.64	86.26	84.50	-0.03	40.3	40.2	40.3	40.3	33.22	33.33	15:35
90.7	77.9	89.9	79.6	92.4	82.6	83.59	83.62	86.27	84.49	-0.03	40.3	40.2	40.4	40.3	33.24	33.38	15:36
90.6	77.8	89.9	79.7	92.4	82.6	83.58	83.65	86.26	84.50	-0.03	40.2	40.2	40.4	40.3	33.30	33.42	15:37
90.7	77.9	89.9	79.6	92.4	82.6	83.59	83.65	86.28	84.50	-0.03	40.2	40.2	40.4	40.3	33.24	33.35	15:38
90.7	77.9	89.9	79.7	92.4	82.6	83.60	83.65	86.26	84.50	-0.03	40.2	40.2	40.4	40.3	33.26	33.37	15:39
90.7	77.9	89.9	79.7	92.4	82.6	83.60	83.65	86.26	84.50	-0.03	40.3	40.2	40.4	40.3	33.12	33.23	15:40
90.7	77.9	89.9	79.6	92.4	82.6	83.61	83.63	86.24	84.49	-0.03	40.3	40.2	40.4	40.3	33.12	33.26	15:41
90.7	77.9	89.9	79.6	92.4	82.6	83.61	83.64	86.26	84.50	-0.03	40.3	40.2	40.4	40.3	33.24	33.36	15:42
90.7	77.9	89.9	79.6	92.4	82.6	83.60	83.65	86.29	84.51	-0.03	40.2	40.2	40.4	40.3	33.28	33.39	15:43
90.7	77.9	89.9	79.6	92.4	82.6	83.60	83.64	86.29	84.51	-0.03	40.3	40.2	40.4	40.3	33.31	33.44	15:44
90.7	77.9	89.9	79.6	92.4	82.6	83.61	83.65	86.28	84.51	-0.03	40.2	40.2	40.4	40.3	33.27	33.37	15:45
90.7	77.9	89.9	79.7	92.4	82.6	83.63	83.65	86.26	84.51	-0.02	40.3	40.2	40.4	40.3	33.29	33.41	15:46
90.6	77.9	89.9	79.6	92.4	82.6	83.59	83.65	86.27	84.50	-0.02	40.3	40.2	40.4	40.3	33.25	33.36	15:47
90.7	77.9	90.0	79.7	92.4	82.7	83.62	83.67	86.30	84.53	-0.02	40.3	40.2	40.4	40.3	33.35	33.46	15:48
90.7	77.9	90.0	79.6	92.4	82.6	83.61	83.66	86.30	84.52	-0.02	40.2	40.2	40.3	40.3	33.34	33.44	15:49
90.7	77.9	89.9	79.6	92.4	82.7	83.61	83.66	86.31	84.53	-0.02	40.2	40.1	40.4	40.3	33.38	33.48	15:50
90.7	77.9	90.0	79.7	92.4	82.6	83.64	83.67	86.28	84.53	-0.01	40.2	40.2	40.4	40.3	33.40	33.50	15:51
90.7	77.9	89.9	79.7	92.4	82.6	83.63	83.67	86.28	84.52	-0.01	40.2	40.2	40.4	40.2	33.38	33.48	15:52
90.7	77.9	89.9	79.6	92.4	82.6	83.64	83.66	86.27	84.53	-0.01	40.3	40.2	40.3	40.3	33.32	33.44	15:53
90.7	77.9	89.9	79.7	92.4	82.6	83.62	83.67	86.31	84.53	-0.01	40.3	40.2	40.4	40.3	33.32	33.44	15:54
90.7	77.9	89.9	79.6	92.4	82.6	83.60	83.64	86.30	84.51	-0.01	40.3	40.2	40.3	40.3	33.40	33.52	15:55
90.7	77.9	89.9	79.6	92.4	82.6	83.64	83.66	86.29	84.53	-0.01	40.3	40.2	40.4	40.3	33.32	33.45	15:56
90.7	77.9	89.9	79.6	92.4	82.7	83.63	83.67	86.32	84.54	-0.00	40.2	40.2	40.4	40.3	33.34	33.45	15:57
90.7	77.9	89.9	79.6	92.5	82.7	83.62	83.68	86.32	84.54	0.00	40.2	40.1	40.4	40.3	33.31	33.42	15:58
90.7	77.9	89.9	79.7	92.4	82.6	83.63	83.67	86.29	84.53	0.00	40.2	40.1	40.3	40.2	33.37	33.46	15:59
90.7	77.9	90.0	79.7	92.4	82.7	83.64	83.69	86.32	84.55	0.01	40.2	40.2	40.3	40.2	33.33	33.41	16:00
90.7	77.9	90.0	79.6	92.5	82.7	83.63	83.68	86.33	84.55	0.01	40.2	40.1	40.3	40.2	33.22	33.31	16:01
90.7	77.9	89.9	79.6	92.4	82.6	83.64	83.66	86.28	84.52	0.01	40.2	40.2	40.3	40.2	33.26	33.36	16:02
90.8	77.9	89.9	79.6	92.5	82.6	83.63	83.66	86.31	84.53	0.02	40.2	40.2	40.4	40.3	33.27	33.39	16:03
90.7	77.9	90.0	79.7	92.4	82.6	83.63	83.69	86.31	84.55	0.02	40.3	40.2	40.3	40.3	33.32	33.41	16:04
[illegible]0.7	77.9	89.9	79.6	92.5	82.7	83.64	83.68	86.33	84.55	0.03	40.2	40.1	40.3	40.2	33.22	33.31	16:05
90.7	77.9	90.0	79.7	92.4	82.6	83.65	83.69	86.31	84.55	0.03	40.3	40.2	40.4	40.3	33.26	33.36	16:06
90.7	77.9	89.9	79.6	92.5	82.6	83.62	83.67	86.32	84.54	0.03	40.2	40.2	40.3	40.2	33.35	33.46	16:07
90.8	78.0	89.9	79.6	92.4	82.6	83.65	83.66	86.31	84.54	0.04	40.2	40.2	40.5	40.3	33.51	33.64	16:08
90.8	78.0	90.0	79.7	92.4	82.7	83.67	83.70	86.32	84.56	0.04	40.2	40.2	40.3	40.3	33.50	33.59	16:09
90.8	77.9	90.0	79.7	92.5	82.7	83.67	83.72	86.35	84.58	0.05	40.2	40.2	40.3	40.2	33.52	33.59	16:10
90.8	78.0	89.9	79.6	92.5	82.7	83.69	83.71	86.36	84.58	0.05	40.2	40.2	40.3	40.2	33.50	33.60	16:11
90.8	77.9	90.0	79.7	92.5	82.7	83.69	83.74	86.36	84.60	0.06	40.2	40.2	40.3	40.3	33.51	33.59	16:12
90.8	78.0	90.0	79.7	92.6	82.7	83.68	83.73	86.40	84.60	0.07	40.2	40.2	40.4	40.2	33.45	33.54	16:13
90.8	78.0	90.0	79.7	92.5	82.7	83.69	83.73	86.36	84.59	0.08	40.3	40.2	40.4	40.3	33.44	33.53	16:14
90.8	78.0	90.0	79.7	92.6	82.7	83.69	83.73	86.39	84.60	0.08	40.3	40.2	40.4	40.3	33.46	33.56	16:15
90.8	77.9	90.1	79.7	92.5	82.7	83.68	83.74	86.38	84.60	0.09	40.2	40.1	40.4	40.3	33.46	33.53	16:16
90.8	77.9	90.0	79.7	92.5	82.7	83.68	83.73	86.39	84.60	0.09	40.3	40.1	40.4	40.3	33.50	33.60	16:17
90.8	78.0	90.1	79.7	92.5	82.7	83.72	83.75	86.37	84.61	0.10	40.2	40.2	40.4	40.3	33.47	33.54	16:18
90.8	77.9	90.1	79.7	92.6	82.7	83.71	83.76	86.42	84.63	0.11	40.3	40.1	40.4	40.3	33.28	33.35	16:19
90.8	78.0	90.1	79.7	92.5	82.7	83.72	83.76	86.39	84.63	0.12	40.3	40.2	40.4	40.3	33.20	33.28	16:20
90.8	78.0	90.0	79.7	92.6	82.7	83.68	83.72	86.38	84.59	0.12	40.3	40.2	40.4	40.3	33.27	33.37	16:21
90.8	78.0	90.0	79.7	92.6	82.7	83.70	83.73	86.40	84.61	0.13	40.3	40.2	40.4	40.3	33.27	33.37	16:22
90.8	77.9	90.0	79.7	92.6	82.7	83.69	83.73	86.40	84.61	0.13	40.3	40.2	40.3	40.3	33.26	33.35	16:23
90.8	77.9	90.0	79.7	92.5	82.7	83.70	83.74	86.36	84.60	0.13	40.2	40.2	40.3	40.3	33.27	33.34	16:24
90.8	78.0	90.0	79.7	92.5	82.7	83.68	83.72	86.37	84.59	0.13	40.3	40.2	40.4	40.3	33.18	33.28	16:25
90.8	78.0	90.0	79.7	92.5	82.7	83.69	83.74	86.36	84.60	0.13	40.3	40.3	40.4	40.3	33.32	33.42	16:26
90.8	78.0	90.0	79.7	92.5	82.7	83.69	83.74	86.36	84.60	0.13	40.3	40.2	40.4	40.3	33.12	33.21	16:27
90.8	78.0	90.0	79.7	92.5	82.7	83.70	83.73	86.37	84.60	0.13	40.3	40.2	40.5	40.3	33.29	33.39	16:28
90.8	77.9	90.0	79.7	92.6	82.7	83.67	83.72	86.38	84.59	0.13	40.3	40.2	40.4	40.3	33.26	33.37	16:29
90.8	77.9	90.0	79.7	92.5	82.7	83.68	83.73	86.35	84.59	0.13	40.3	40.2	40.4	40.3	33.26	33.35	16:30

COMMENTS _____

Tested By C L Litledge Date 5-5-93 Reviewed By Frank A Dewey Date 5-5-93

AMPACITY TEST. JOB NUMBER 93-0501. SAMPLE NUMBER 93-0501-03 DATA FILE 8C66N003.001 05-01-1993

POSITION 1		POSITION 2		POSITION 3		POSITION AVERAGES			AVG		AMBIENT TEMPERATURE				AMPS		
T1max	T1min	T2max	T2min	T3max	T3min	T1avg	T2avg	T3avg	Twave	SLOPE	Tam1	Tam2	Tam3	Taav	It	I'	TIME
91.7	79.8	90.5	81.1	90.4	82.1	85.89	84.66	84.32	84.96	0.15	40.4	40.4	40.8	40.5	33.11	33.15	10:19
91.7	79.8	90.5	81.2	90.4	82.1	85.90	84.67	84.34	84.97	0.15	40.3	40.4	40.7	40.5	33.11	33.13	10:20
91.7	79.8	90.5	81.2	90.4	82.1	85.90	84.66	84.35	84.97	0.16	40.4	40.5	40.7	40.5	33.14	33.19	10:21
91.7	79.8	90.4	81.1	90.4	82.2	85.90	84.67	84.36	84.97	0.16	40.4	40.4	40.7	40.5	33.18	33.22	10:22
91.7	79.8	90.4	81.1	90.4	82.2	85.89	84.66	84.36	84.97	0.16	40.3	40.4	40.7	40.5	33.11	33.15	10:23
91.7	79.8	90.5	81.2	90.4	82.1	85.90	84.67	84.35	84.97	0.16	40.4	40.5	40.8	40.6	33.16	33.22	10:24
91.7	79.8	90.4	81.2	90.4	82.1	85.92	84.67	84.35	84.98	0.17	40.4	40.4	40.7	40.5	33.15	33.19	10:25
91.8	79.8	90.5	81.2	90.4	82.2	85.93	84.70	84.38	85.00	0.17	40.4	40.4	40.8	40.5	33.04	33.07	10:26
91.8	79.8	90.5	81.2	90.4	82.1	85.91	84.67	84.35	84.98	0.17	40.3	40.4	40.8	40.5	33.01	33.05	10:27
91.7	79.8	90.4	81.1	90.4	82.1	85.90	84.66	84.35	84.97	0.17	40.4	40.4	40.7	40.5	32.98	33.02	10:28
91.7	79.8	90.5	81.2	90.4	82.2	85.89	84.67	84.36	84.97	0.17	40.4	40.5	40.7	40.5	32.98	33.02	10:29
91.7	79.8	90.5	81.2	90.4	82.2	85.91	84.68	84.35	84.98	0.17	40.4	40.4	40.7	40.5	33.09	33.12	10:30
91.7	79.8	90.5	81.2	90.4	82.2	85.91	84.69	84.37	84.99	0.17	40.4	40.5	40.7	40.5	33.02	33.05	10:31
91.7	79.8	90.5	81.2	90.4	82.2	85.91	84.70	84.37	84.99	0.17	40.4	40.4	40.7	40.5	33.01	33.04	10:32
91.7	79.8	90.4	81.1	90.5	82.2	85.92	84.68	84.37	84.99	0.17	40.4	40.4	40.7	40.5	32.99	33.03	10:33
91.7	79.8	90.4	81.1	90.4	82.2	85.91	84.66	84.36	84.97	0.17	40.4	40.5	40.7	40.5	33.06	33.11	10:34
91.7	79.8	90.5	81.2	90.4	82.2	85.90	84.68	84.35	84.98	0.17	40.4	40.5	40.8	40.5	32.98	33.02	10:35
91.7	79.8	90.4	81.1	90.5	82.2	85.91	84.68	84.38	84.99	0.16	40.4	40.4	40.7	40.5	33.00	33.04	10:36
91.7	79.8	90.4	81.1	90.4	82.2	85.89	84.67	84.36	84.97	0.16	40.4	40.5	40.7	40.5	32.95	33.00	10:37
91.7	79.8	90.5	81.2	90.5	82.2	85.89	84.67	84.36	84.97	0.15	40.4	40.4	40.8	40.5	33.07	33.11	10:38
91.7	79.8	90.5	81.2	90.5	82.2	85.90	84.69	84.37	84.99	0.15	40.4	40.5	40.7	40.5	33.08	33.11	10:39
91.8	79.8	90.5	81.2	90.4	82.2	85.92	84.70	84.37	85.00	0.15	40.4	40.5	40.8	40.5	33.14	33.17	10:40
91.7	79.8	90.5	81.2	90.5	82.2	85.90	84.66	84.38	84.98	0.14	40.4	40.4	40.7	40.5	33.08	33.12	10:41
91.7	79.8	90.5	81.2	90.4	82.2	85.90	84.70	84.38	84.99	0.14	40.4	40.5	40.8	40.5	33.01	33.04	10:42
91.7	79.8	90.5	81.2	90.5	82.2	85.92	84.68	84.35	85.00	0.13	40.4	40.5	40.8	40.5	33.02	33.08	10:43
91.7	79.8	90.5	81.2	90.5	82.2	85.92	84.69	84.39	85.00	0.13	40.4	40.4	40.7	40.5	33.09	33.14	10:44
91.7	79.8	90.5	81.2	90.5	82.2	85.92	84.68	84.38	85.00	0.12	40.4	40.5	40.8	40.6	33.01	33.06	10:45
91.8	79.8	90.5	81.2	90.5	82.2	85.92	84.70	84.38	85.00	0.12	40.4	40.5	40.8	40.6	33.06	33.10	10:46
91.7	79.8	90.5	81.2	90.5	82.2	85.93	84.69	84.39	85.00	0.12	40.3	40.5	40.8	40.5	33.07	33.12	10:47
91.7	79.8	90.5	81.2	90.5	82.2	85.90	84.68	84.38	84.99	0.11	40.4	40.5	40.8	40.6	33.02	33.08	10:48
91.8	79.8	90.5	81.2	90.4	82.2	85.90	84.69	84.37	84.99	0.11	40.5	40.5	40.8	40.6	33.02	33.06	10:49
91.7	79.8	90.5	81.2	90.5	82.2	85.93	84.69	84.39	85.00	0.11	40.4	40.5	40.7	40.5	33.03	33.08	10:50
91.7	79.8	90.5	81.2	90.5	82.2	85.90	84.68	84.38	84.99	0.10	40.5	40.5	40.8	40.6	33.04	33.09	10:51
91.7	79.8	90.5	81.2	90.5	82.2	85.91	84.70	84.39	85.00	0.10	40.5	40.5	40.8	40.6	33.07	33.11	10:52
91.7	79.8	90.4	81.2	90.5	82.2	85.91	84.68	84.37	84.98	0.09	40.5	40.5	40.8	40.6	33.01	33.08	10:53
91.8	79.8	90.5	81.2	90.5	82.2	85.92	84.69	84.39	85.00	0.09	40.4	40.5	40.8	40.6	33.08	33.13	10:54
91.8	79.8	90.5	81.2	90.5	82.2	85.93	84.71	84.39	85.01	0.09	40.5	40.5	40.8	40.6	33.09	33.14	10:55
91.7	79.8	90.5	81.2	90.5	82.2	85.91	84.68	84.38	84.99	0.08	40.4	40.5	40.8	40.6	33.09	33.15	10:56
91.7	79.8	90.4	81.1	90.5	82.2	85.91	84.67	84.38	84.99	0.08	40.5	40.5	40.8	40.6	33.07	33.14	10:57
91.7	79.8	90.5	81.2	90.5	82.2	85.91	84.68	84.37	84.99	0.07	40.5	40.5	40.8	40.6	33.05	33.10	10:58
91.7	79.8	90.5	81.2	90.5	82.2	85.91	84.70	84.39	85.00	0.07	40.5	40.5	40.8	40.6	33.01	33.06	10:59
91.8	79.8	90.4	81.2	90.5	82.2	85.92	84.68	84.37	84.99	0.07	40.5	40.5	40.8	40.6	32.96	33.04	11:00
91.8	79.8	90.5	81.2	90.4	82.2	85.92	84.69	84.36	84.99	0.06	40.5	40.5	40.8	40.6	32.96	33.03	11:01
91.7	79.8	90.5	81.2	90.4	82.2	85.91	84.69	84.36	84.99	0.06	40.5	40.5	40.8	40.6	32.94	32.99	11:02
91.7	79.8	90.5	81.1	90.4	82.2	85.90	84.68	84.36	84.98	0.06	40.5	40.5	40.9	40.6	32.89	32.96	11:03
91.7	79.8	90.4	81.1	90.5	82.2	85.90	84.68	84.37	84.98	0.05	40.5	40.5	40.8	40.6	32.94	33.00	11:04
91.7	79.8	90.5	81.1	90.4	82.1	85.92	84.68	84.34	84.98	0.05	40.5	40.5	40.8	40.6	32.96	33.03	11:05
91.7	79.8	90.4	81.1	90.4	82.2	85.89	84.66	84.35	84.97	0.04	40.5	40.5	41.0	40.7	32.97	33.06	11:06
91.7	79.8	90.4	81.1	90.4	82.1	85.90	84.65	84.33	84.96	0.04	40.5	40.5	40.8	40.6	32.96	33.04	11:07
91.7	79.8	90.4	81.1	90.5	82.2	85.88	84.66	84.37	84.97	0.03	40.4	40.5	40.9	40.6	32.86	32.93	11:08
91.7	79.8	90.4	81.1	90.5	82.2	85.89	84.67	84.37	84.98	0.03	40.4	40.5	40.8	40.6	32.96	33.03	11:09
91.7	79.8	90.4	81.1	90.4	82.2	85.89	84.66	84.35	84.97	0.02	40.5	40.5	40.8	40.6	32.91	32.99	11:10
91.7	79.8	90.4	81.1	90.4	82.2	85.89	84.66	84.35	84.97	0.02	40.5	40.5	40.9	40.6	32.97	33.06	11:11
91.7	79.8	90.5	81.1	90.4	82.2	85.90	84.68	84.36	84.98	0.02	40.5	40.6	40.9	40.7	32.92	33.00	11:12
91.7	79.8	90.5	81.2	90.4	82.2	85.89	84.68	84.36	84.98	0.01	40.5	40.6	40.9	40.6	32.94	33.02	11:13
91.7	79.8	90.4	81.1	90.4	82.1	85.88	84.65	84.35	84.96	0.01	40.5	40.5	40.9	40.6	32.97	33.07	11:14
91.7	79.8	90.4	81.1	90.4	82.2	85.88	84.64	84.34	84.96	0.00	40.5	40.6	40.9	40.7	33.00	33.10	11:15
91.7	79.8	90.4	81.1	90.4	82.2	85.88	84.64	84.35	84.95	-0.00	40.5	40.5	40.8	40.6	32.90	32.99	11:16
91.7	79.8	90.4	81.1	90.4	82.2	85.89	84.64	84.34	84.96	-0.01	40.5	40.5	40.8	40.6	32.97	33.06	11:17
91.7	79.8	90.4	81.1	90.4	82.1	85.89	84.65	84.34	84.96	-0.01	40.5	40.5	40.8	40.6	32.92	33.00	11:18

COMMENTS _____

Tested By C L Ludledge Date 5-1-93 Reviewed By Frank A. Lewey Date 5-5-93

AMPACITY TEST. JOB NUMBER 93-0501. SAMPLE NUMBER 93-0501-03 DATA FILE 8C6GN003.001 05-01-1993 G-8

POSITION 1		POSITION 2		POSITION 3		_POSITION AVERAGES_			AVG		AMBIENT TEMPERATURE				AMPS		
T1mx	T1mn	T2mx	T2mn	T3mx	T3mn	T1avg	T2avg	T3avg	Twave	SLOPE	Tam1	Tam2	Tam3	Taav	It	I'	TIME
91.7	79.8	90.4	81.1	90.4	82.2	85.89	84.65	84.35	84.96	-0.01	40.5	40.5	40.8	40.6	32.92	33.01	11:19
91.7	79.8	90.4	81.1	90.4	82.2	85.89	84.66	84.35	84.95	-0.02	40.5	40.5	40.9	40.7	32.91	33.00	11:20
91.7	79.8	90.5	81.1	90.4	82.2	85.88	84.66	84.35	84.96	-0.02	40.5	40.6	40.9	40.7	32.95	33.04	11:21
91.7	79.8	90.5	81.1	90.4	82.2	85.90	84.67	84.35	84.97	-0.02	40.5	40.5	40.8	40.6	32.92	32.99	11:22
91.7	79.8	90.5	81.2	90.4	82.1	85.87	84.65	84.33	84.95	-0.02	40.5	40.6	40.9	40.7	32.98	33.08	11:23
91.7	79.8	90.5	81.1	90.4	82.2	85.88	84.65	84.33	84.96	-0.03	40.5	40.5	40.8	40.6	32.95	33.03	11:24
91.7	79.7	90.5	81.2	90.4	82.2	85.87	84.67	84.35	84.96	-0.03	40.6	40.6	40.9	40.7	33.10	33.20	11:25
91.7	79.8	90.5	81.1	90.4	82.2	85.89	84.67	84.34	84.97	-0.03	40.5	40.6	40.9	40.6	33.04	33.12	11:26
91.7	79.8	90.4	81.1	90.4	82.2	85.89	84.66	84.35	84.97	-0.03	40.5	40.5	40.8	40.6	33.15	33.24	11:27
91.7	79.8	90.4	81.2	90.4	82.1	85.90	84.66	84.36	84.97	-0.03	40.5	40.6	40.9	40.7	33.08	33.18	11:28
91.7	79.8	90.4	81.1	90.4	82.1	85.90	84.66	84.36	84.97	-0.03	40.6	40.6	40.9	40.7	33.03	33.13	11:29
91.7	79.8	90.4	81.2	90.4	82.2	85.91	84.67	84.35	84.97	-0.03	40.5	40.6	40.8	40.7	33.03	33.12	11:30
91.7	79.8	90.4	81.1	90.4	82.2	85.91	84.68	84.38	84.99	-0.03	40.5	40.6	40.8	40.6	33.02	33.11	11:31
91.7	79.8	90.4	81.1	90.4	82.2	85.92	84.66	84.36	84.98	-0.03	40.5	40.6	40.8	40.7	33.03	33.13	11:32
91.7	79.8	90.4	81.1	90.4	82.2	85.90	84.66	84.35	84.97	-0.03	40.5	40.6	40.9	40.7	33.12	33.22	11:33
91.7	79.8	90.5	81.2	90.4	82.2	85.90	84.69	84.38	84.99	-0.03	40.5	40.6	40.9	40.7	33.00	33.08	11:34
91.7	79.8	90.5	81.2	90.4	82.2	85.92	84.70	84.37	85.00	-0.03	40.5	40.6	40.9	40.7	33.13	33.21	11:35
91.7	79.8	90.5	81.2	90.4	82.2	85.92	84.68	84.37	84.99	-0.03	40.6	40.6	40.9	40.7	33.04	33.14	11:36
91.7	79.8	90.5	81.2	90.4	82.2	85.92	84.69	84.38	84.99	-0.03	40.5	40.6	40.8	40.7	33.12	33.20	11:37
91.7	79.8	90.4	81.2	90.5	82.2	85.90	84.68	84.39	84.99	-0.03	40.5	40.6	40.9	40.7	33.00	33.09	11:38
91.7	79.8	90.4	81.2	90.4	82.2	85.92	84.68	84.38	85.00	-0.02	40.5	40.6	40.9	40.7	33.08	33.18	11:39
91.8	79.8	90.5	81.2	90.4	82.2	85.93	84.71	84.39	85.01	-0.02	40.5	40.6	40.9	40.7	33.09	33.16	11:40
91.7	79.8	90.5	81.2	90.5	82.2	85.93	84.70	84.40	85.01	-0.02	40.5	40.7	40.9	40.7	33.08	33.19	11:41
91.8	79.8	90.5	81.2	90.4	82.2	85.93	84.70	84.37	85.00	-0.01	40.6	40.6	40.9	40.7	33.06	33.15	11:42
91.7	79.8	90.5	81.2	90.5	82.2	85.92	84.69	84.39	85.00	-0.01	40.6	40.6	40.9	40.7	33.10	33.19	11:43
91.7	79.8	90.5	81.2	90.4	82.2	85.92	84.70	84.39	85.00	-0.01	40.6	40.6	40.9	40.7	33.03	33.12	11:44
91.8	79.8	90.5	81.2	90.4	82.2	85.94	84.70	84.37	85.00	-0.00	40.5	40.6	41.0	40.7	33.06	33.16	11:45
91.7	79.8	90.5	81.2	90.5	82.2	85.91	84.71	84.39	85.00	0.00	40.6	40.6	40.9	40.7	33.03	33.11	11:46
91.7	79.8	90.5	81.2	90.4	82.2	85.91	84.69	84.39	85.00	0.00	40.6	40.6	40.9	40.7	32.96	33.06	11:47
91.7	79.8	90.5	81.2	90.4	82.2	85.91	84.68	84.37	84.98	0.01	40.6	40.7	40.9	40.7	32.98	33.10	11:48
91.7	79.8	90.4	81.2	90.5	82.2	85.92	84.69	84.38	85.00	0.01	40.6	40.7	40.9	40.7	33.04	33.16	11:49
91.8	79.8	90.5	81.2	90.4	82.2	85.93	84.71	84.37	85.00	0.01	40.6	40.7	40.9	40.7	33.00	33.09	11:50
91.8	79.8	90.5	81.2	90.4	82.2	85.95	84.71	84.38	85.01	0.02	40.6	40.7	40.8	40.7	32.99	33.09	11:51
91.8	79.8	90.5	81.2	90.4	82.2	85.94	84.71	84.37	85.00	0.02	40.6	40.7	40.9	40.7	33.11	33.20	11:52
91.7	79.8	90.4	81.2	90.5	82.2	85.93	84.69	84.39	85.00	0.02	40.6	40.7	40.9	40.7	33.11	33.23	11:53
91.8	79.8	90.5	81.2	90.4	82.2	85.92	84.71	84.39	85.01	0.03	40.6	40.7	41.0	40.7	33.06	33.16	11:54
91.8	79.8	90.5	81.2	90.5	82.2	85.93	84.71	84.40	85.01	0.03	40.6	40.6	40.9	40.7	33.01	33.12	11:55
91.8	79.8	90.5	81.2	90.4	82.2	85.94	84.71	84.39	85.01	0.04	40.6	40.6	40.9	40.7	33.04	33.13	11:56
91.7	79.8	90.5	81.2	90.5	82.2	85.92	84.70	84.38	85.00	0.04	40.6	40.7	40.9	40.7	32.97	33.07	11:57
91.8	79.8	90.6	81.2	90.5	82.2	85.94	84.72	84.40	85.02	0.04	40.6	40.7	41.1	40.8	33.06	33.16	11:58
91.8	79.8	90.5	81.2	90.5	82.2	85.94	84.72	84.40	85.02	0.05	40.6	40.7	41.0	40.8	33.04	33.15	11:59
91.8	79.8	90.5	81.2	90.5	82.2	85.94	84.70	84.39	85.01	0.05	40.6	40.7	40.9	40.7	33.04	33.16	12:00
91.8	79.8	90.5	81.2	90.4	82.2	85.94	84.71	84.40	85.02	0.05	40.6	40.7	41.0	40.8	32.98	33.08	12:01
91.8	79.8	90.6	81.2	90.5	82.2	85.95	84.73	84.41	85.03	0.06	40.6	40.7	41.1	40.8	33.01	33.12	12:02
91.8	79.8	90.5	81.2	90.5	82.2	85.92	84.70	84.39	85.00	0.06	40.6	40.7	41.0	40.8	32.89	33.01	12:03
91.7	79.8	90.5	81.2	90.5	82.2	85.93	84.70	84.40	85.01	0.06	40.6	40.7	41.0	40.8	32.97	33.09	12:04
91.8	79.8	90.5	81.2	90.5	82.2	85.93	84.70	84.39	85.00	0.06	40.6	40.7	40.9	40.7	32.94	33.05	12:05
91.7	79.8	90.5	81.2	90.5	82.2	85.92	84.71	84.41	85.01	0.07	40.6	40.7	41.0	40.7	33.04	33.13	12:06
91.7	79.8	90.5	81.2	90.5	82.2	85.91	84.71	84.40	85.00	0.06	40.6	40.7	40.9	40.7	32.97	33.06	12:07
91.7	79.8	90.4	81.2	90.5	82.2	85.91	84.68	84.38	84.99	0.06	40.6	40.7	41.1	40.8	33.10	33.23	12:08
91.8	79.8	90.5	81.2	90.5	82.2	85.95	84.72	84.40	85.02	0.06	40.7	40.7	40.9	40.8	32.98	33.10	12:09
91.7	79.8	90.5	81.2	90.5	82.2	85.93	84.70	84.41	85.01	0.06	40.6	40.7	41.0	40.8	33.06	33.18	12:10
91.7	79.8	90.5	81.2	90.5	82.2	85.92	84.70	84.40	85.01	0.06	40.6	40.7	41.0	40.8	33.00	33.13	12:11
91.7	79.8	90.5	81.2	90.5	82.2	85.94	84.70	84.40	85.02	0.06	40.6	40.7	41.0	40.8	33.07	33.20	12:12
91.8	79.8	90.5	81.2	90.4	82.2	85.95	84.71	84.38	85.01	0.07	40.7	40.7	41.0	40.8	33.02	33.15	12:13
91.8	79.8	90.4	81.2	90.5	82.2	85.95	84.70	84.38	85.01	0.06	40.7	40.7	41.0	40.8	33.08	33.20	12:14
91.8	79.8	90.5	81.2	90.5	82.2	85.95	84.72	84.39	85.02	0.06	40.7	40.7	41.0	40.8	33.02	33.13	12:15
91.8	79.8	90.5	81.2	90.5	82.2	85.94	84.72	84.40	85.02	0.06	40.6	40.7	41.1	40.8	32.95	33.06	12:16
91.8	79.8	90.5	81.2	90.4	82.2	85.93	84.70	84.38	85.00	0.06	40.7	40.7	41.0	40.8	33.05	33.17	12:17
91.8	79.8	90.5	81.2	90.5	82.2	85.94	84.72	84.40	85.02	0.06	40.7	40.7	41.0	40.8	33.05	33.17	12:18

COMMENTS _____

Tested By C L Rutledge Date 5-1-93 Reviewed By Frank A. Dewey Date 5-5-93

AMPACITY TEST. JOB NUMBER 93-0501. SAMPLE NUMBER 93-0501-03 DATA FILE 8C66N003.001 05-01-1993

POSITION 1		POSITION 2		POSITION 3		_POSITION AVERAGES_			AVG		AMBIENT TEMPERATURE				AMPS		
T1mx	T1mn	T2mx	T2mn	T3mx	T3mn	T1avg	T2avg	T3avg	Twave	SLOPE	Tam1	Tam2	Tam3	Taav	It	I'	TIME
91.8	79.8	90.5	81.2	90.5	82.2	85.94	84.71	84.41	85.02	0.06	40.6	40.7	40.9	40.8	33.10	33.22	12:19
91.8	79.8	90.5	81.2	90.5	82.2	85.95	84.71	84.40	85.02	0.05	40.6	40.7	40.9	40.8	33.04	33.15	12:20
91.8	79.8	90.5	81.2	90.5	82.2	85.96	84.73	84.41	85.03	0.05	40.7	40.7	41.0	40.8	32.99	33.11	12:21
91.8	79.8	90.5	81.2	90.4	82.2	85.96	84.72	84.38	85.02	0.05	40.7	40.7	41.0	40.8	33.04	33.16	12:22
91.8	79.8	90.5	81.2	90.5	82.2	85.95	84.72	84.41	85.03	0.05	40.7	40.7	41.0	40.8	33.10	33.21	12:23
91.8	79.8	90.5	81.2	90.5	82.2	85.96	84.74	84.43	85.04	0.05	40.7	40.7	41.0	40.8	33.13	33.24	12:24
91.8	79.8	90.5	81.2	90.5	82.2	85.96	84.72	84.41	85.03	0.05	40.7	40.7	41.1	40.8	33.11	33.25	12:25
91.8	79.8	90.5	81.2	90.5	82.2	85.95	84.71	84.41	85.02	0.05	40.8	40.7	41.0	40.8	33.10	33.24	12:26
91.8	79.9	90.5	81.2	90.5	82.2	85.97	84.73	84.42	85.04	0.05	40.7	40.7	41.0	40.8	33.09	33.21	12:27
91.8	79.8	90.6	81.2	90.5	82.2	85.97	84.74	84.42	85.04	0.05	40.7	40.8	41.0	40.8	33.04	33.16	12:28
91.8	79.9	90.5	81.2	90.5	82.2	85.97	84.74	84.43	85.04	0.05	40.7	40.7	41.0	40.8	32.98	33.10	12:29
91.8	79.8	90.5	81.2	90.5	82.2	85.96	84.72	84.42	85.03	0.04	40.7	40.7	41.0	40.8	32.91	33.03	12:30
91.8	79.8	90.6	81.2	90.5	82.2	85.95	84.73	84.42	85.03	0.04	40.7	40.8	41.0	40.8	32.96	33.07	12:31
91.8	79.8	90.4	81.2	90.5	82.2	85.97	84.71	84.39	85.02	0.04	40.6	40.7	41.0	40.8	32.87	33.01	12:32
91.8	79.8	90.4	81.2	90.5	82.2	85.94	84.69	84.38	85.00	0.04	40.7	40.8	41.0	40.8	32.93	33.08	12:33
91.8	79.8	90.5	81.2	90.5	82.2	85.97	84.73	84.41	85.04	0.04	40.7	40.8	41.0	40.8	32.91	33.04	12:34
91.8	79.8	90.5	81.2	90.5	82.2	85.95	84.72	84.39	85.02	0.04	40.7	40.8	41.0	40.8	32.96	33.09	12:35
91.8	79.8	90.5	81.2	90.5	82.2	85.94	84.71	84.42	85.02	0.04	40.6	40.8	41.1	40.8	32.96	33.10	12:36
91.8	79.8	90.5	81.2	90.5	82.2	85.94	84.72	84.42	85.03	0.03	40.7	40.8	41.0	40.8	33.04	33.18	12:37
91.8	79.8	90.5	81.2	90.5	82.2	85.96	84.73	84.39	85.03	0.03	40.7	40.9	41.1	40.9	33.06	33.20	12:38
91.8	79.8	90.5	81.2	90.5	82.2	85.97	84.73	84.41	85.04	0.03	40.7	40.8	41.0	40.8	33.09	33.22	12:39
91.8	79.8	90.5	81.2	90.5	82.3	85.97	84.73	84.43	85.04	0.04	40.7	40.8	41.0	40.8	33.04	33.18	12:40
91.8	79.8	90.6	81.2	90.5	82.2	85.96	84.75	84.43	85.04	0.04	40.7	40.7	41.0	40.8	33.06	33.17	12:41
91.8	79.8	90.5	81.2	90.5	82.2	85.97	84.72	84.42	85.04	0.04	40.7	40.8	41.0	40.8	32.93	33.07	12:42
91.8	79.8	90.5	81.2	90.5	82.2	85.97	84.74	84.42	85.05	0.04	40.7	40.8	41.0	40.8	33.10	33.22	12:43
91.8	79.8	90.5	81.2	90.5	82.2	85.94	84.72	84.40	85.02	0.04	40.7	40.8	41.1	40.8	33.10	33.24	12:44
91.8	79.8	90.5	81.2	90.5	82.2	85.97	84.74	84.43	85.05	0.04	40.7	40.8	41.1	40.9	33.06	33.19	12:45
91.8	79.8	90.6	81.2	90.5	82.3	85.97	84.75	84.45	85.06	0.04	40.7	40.8	41.1	40.9	33.03	33.16	12:46
91.8	79.8	90.5	81.2	90.5	82.2	85.96	84.73	84.42	85.04	0.04	40.7	40.8	41.0	40.8	32.97	33.10	12:47
91.8	79.8	90.6	81.2	90.5	82.2	85.96	84.75	84.43	85.04	0.04	40.8	40.8	41.1	40.9	33.00	33.13	12:48
91.8	79.8	90.5	81.2	90.5	82.3	85.98	84.75	84.44	85.06	0.04	40.7	40.8	41.0	40.8	33.00	33.13	12:49
91.8	79.8	90.5	81.2	90.5	82.2	85.95	84.72	84.43	85.04	0.04	40.7	40.8	41.0	40.9	33.06	33.20	12:50
[illegible]	79.9	90.5	81.2	90.5	82.2	85.99	84.73	84.43	85.05	0.04	40.7	40.8	41.1	40.9	33.06	33.21	12:51
[illegible]	79.8	90.5	81.2	90.5	82.3	85.97	84.74	84.45	85.05	0.04	40.8	40.8	41.1	40.9	33.08	33.23	12:52
91.8	79.8	90.6	81.2	90.5	82.2	85.97	84.75	84.44	85.05	0.04	40.8	40.8	41.1	40.9	33.05	33.19	12:53
91.8	79.8	90.6	81.2	90.5	82.2	85.97	84.75	84.44	85.05	0.04	40.7	40.8	41.1	40.9	33.04	33.17	12:54
91.8	79.8	90.5	81.2	90.5	82.3	85.96	84.74	84.45	85.05	0.04	40.7	40.8	41.1	40.9	33.03	33.17	12:55
91.8	79.9	90.5	81.2	90.5	82.2	85.97	84.74	84.44	85.05	0.04	40.7	40.8	41.1	40.9	33.02	33.16	12:56
91.8	79.9	90.5	81.2	90.5	82.2	85.98	84.74	84.44	85.05	0.04	40.8	40.8	41.1	40.9	32.96	33.12	12:57
91.8	79.8	90.5	81.2	90.5	82.2	85.97	84.73	84.41	85.04	0.04	40.8	40.8	41.1	40.9	32.94	33.09	12:58
91.8	79.8	90.6	81.2	90.5	82.2	85.98	84.75	84.42	85.05	0.05	40.8	40.8	41.1	40.9	32.98	33.11	12:59
91.8	79.8	90.5	81.2	90.5	82.2	85.96	84.74	84.44	85.05	0.05	40.8	40.8	41.1	40.9	32.97	33.12	13:00
91.8	79.9	90.5	81.2	90.5	82.2	85.96	84.72	84.43	85.04	0.04	40.7	40.8	41.1	40.9	32.91	33.06	13:01
91.8	79.8	90.5	81.2	90.5	82.2	85.96	84.74	84.42	85.04	0.05	40.8	40.8	41.1	40.9	33.00	33.14	13:02
91.8	79.9	90.5	81.2	90.4	82.2	85.98	84.73	84.40	85.04	0.04	40.8	40.8	41.1	40.9	32.92	33.06	13:03
91.8	79.8	90.5	81.2	90.5	82.2	85.95	84.74	84.44	85.04	0.04	40.8	40.8	41.1	40.9	33.06	33.21	13:04
91.8	79.8	90.5	81.2	90.5	82.2	85.97	84.73	84.42	85.04	0.04	40.8	40.8	41.1	40.9	32.98	33.15	13:05
91.8	79.9	90.5	81.2	90.5	82.2	85.98	84.74	84.43	85.05	0.04	40.8	40.8	41.1	40.9	33.07	33.22	13:06
91.8	79.8	90.5	81.2	90.5	82.2	85.97	84.74	84.43	85.05	0.04	40.8	40.8	41.1	40.9	33.01	33.16	13:07
91.8	79.9	90.5	81.2	90.5	82.2	85.98	84.75	84.43	85.05	0.04	40.8	40.8	41.1	40.9	33.05	33.20	13:08
91.8	79.9	90.6	81.2	90.5	81.9	85.98	84.76	84.40	85.05	0.04	40.8	40.8	41.1	40.9	33.04	33.18	13:09
91.8	79.9	90.5	81.2	90.5	82.2	85.98	84.74	84.43	85.05	0.04	40.8	40.8	41.1	40.9	33.08	33.24	13:10
91.8	79.9	90.5	81.2	90.5	82.2	85.98	84.74	84.43	85.05	0.04	40.6	40.6	40.7	40.6	32.96	33.02	13:11
91.8	79.9	90.5	81.2	90.5	82.3	85.97	84.74	84.44	85.05	0.03	40.4	40.4	40.8	40.5	33.00	33.04	13:12
91.8	79.9	90.6	81.3	90.5	82.2	86.00	84.78	84.45	85.08	0.04	40.5	40.6	40.9	40.6	32.89	32.94	13:13
91.8	79.9	90.5	81.2	90.5	82.2	85.98	84.74	84.44	85.06	0.04	40.5	40.6	40.9	40.7	32.97	33.05	13:14
91.8	79.9	90.6	81.3	90.5	82.2	85.97	84.75	84.44	85.05	0.03	40.6	40.6	40.8	40.7	33.00	33.08	13:15
91.8	79.8	90.6	81.2	90.5	82.3	85.98	84.77	84.46	85.07	0.04	40.6	40.7	40.9	40.7	33.02	33.11	13:16
91.8	79.9	90.5	81.2	90.5	82.2	85.97	84.74	84.43	85.04	0.03	40.6	40.7	40.9	40.8	33.01	33.12	13:17
91.8	79.9	90.5	81.2	90.5	82.2	85.98	84.75	84.44	85.06	0.03	40.7	40.8	41.0	40.8	32.99	33.11	13:18

COMMENTS

Tested By C L Lutledge Date 5-1-93 Reviewed By Frank A. Deeney Date 5-5-93

AMPACITY TEST. JOB NUMBER 93-0501. SAMPLE NUMBER 93-0501-04 DATA FILE 8C6GN004.001 04-30-1993 G-10

POSITION 1		POSITION 2		POSITION 3		POSITION AVERAGES			AVG		AMBIENT TEMPERATURE				AMPS		
T1mx	T1mn	T2mx	T2mn	T3mx	T3mn	T1avg	T2avg	T3avg	Twave	SLOPE	Tam1	Tam2	Tam3	Taav	It	I'	TIME
[illegible].4	79.4	90.2	79.3	88.3	80.1	85.33	85.96	83.34	84.88	0.06	39.1	39.7	39.8	39.6	32.21	32.00	10:41
92.5	79.4	90.3	79.3	88.3	80.1	85.34	85.98	83.36	84.89	0.06	39.2	39.7	39.8	39.5	32.24	32.02	10:42
92.4	79.4	90.2	79.3	88.3	80.1	85.33	85.95	83.33	84.87	0.06	39.1	39.7	39.7	39.5	32.26	32.04	10:43
92.4	79.4	90.2	79.3	88.3	80.1	85.32	85.98	83.36	84.88	0.05	39.2	39.7	39.8	39.5	32.23	32.02	10:44
92.4	79.5	90.2	79.3	88.3	80.1	85.34	85.95	83.34	84.88	0.05	39.1	39.6	39.7	39.5	32.21	31.98	10:45
92.5	79.5	90.2	79.3	88.3	80.1	85.33	85.96	83.33	84.88	0.04	39.1	39.7	39.7	39.5	32.22	31.99	10:46
92.5	79.4	90.3	79.3	88.3	80.1	85.32	85.97	83.34	84.88	0.04	39.2	39.6	39.7	39.5	32.23	32.00	10:47
92.4	79.5	90.2	79.3	88.3	80.1	85.33	85.94	83.32	84.86	0.03	39.1	39.7	39.7	39.5	32.37	32.15	10:48
92.4	79.5	90.2	79.3	88.3	80.1	85.33	85.94	83.32	84.86	0.03	39.1	39.7	39.8	39.5	32.37	32.16	10:49
92.4	79.5	90.2	79.3	88.3	80.1	85.32	85.95	83.34	84.87	0.03	39.2	39.7	39.7	39.5	32.36	32.16	10:50
92.4	79.4	90.2	79.3	88.3	80.1	85.32	85.94	83.33	84.86	0.02	39.2	39.7	39.8	39.5	32.32	32.11	10:51
92.4	79.4	90.2	79.3	88.3	80.1	85.32	85.95	83.34	84.87	0.02	39.2	39.7	39.8	39.5	32.28	32.08	10:52
92.5	79.4	90.2	79.3	88.3	80.1	85.33	85.97	83.34	84.88	0.02	39.2	39.7	39.8	39.6	32.26	32.05	10:53
92.5	79.5	90.3	79.3	88.3	80.1	85.33	85.95	83.31	84.87	0.01	39.2	39.6	39.8	39.5	32.24	32.02	10:54
92.4	79.4	90.2	79.3	88.3	80.2	85.32	85.94	83.33	84.86	0.01	39.2	39.7	39.8	39.6	32.28	32.08	10:55
92.5	79.5	90.3	79.3	88.3	80.1	85.32	85.96	83.33	84.87	0.00	39.3	39.7	39.8	39.6	32.30	32.10	10:56
92.4	79.4	90.2	79.3	88.3	80.1	85.32	85.96	83.35	84.88	-0.00	39.3	39.7	39.9	39.6	32.30	32.12	10:57
92.4	79.4	90.2	79.3	88.3	80.1	85.32	85.96	83.35	84.88	-0.01	39.2	39.7	39.8	39.5	32.19	31.98	10:58
92.5	79.4	90.3	79.3	88.3	80.1	85.32	85.96	83.34	84.88	-0.01	39.2	39.7	39.8	39.6	32.18	31.98	10:59
92.4	79.4	90.2	79.3	88.3	80.1	85.31	85.94	83.34	84.86	-0.02	39.2	39.7	39.8	39.6	32.21	32.03	11:00
92.4	79.4	90.2	79.3	88.3	80.1	85.31	85.93	83.32	84.85	-0.02	39.2	39.8	39.8	39.6	32.18	31.99	11:01
92.4	79.4	90.2	79.3	88.3	80.1	85.29	85.95	83.34	84.86	-0.03	39.2	39.8	39.8	39.6	32.19	31.99	11:02
92.4	79.4	90.2	79.3	88.3	80.1	85.29	85.94	83.33	84.86	-0.03	39.3	39.7	39.9	39.6	32.20	32.03	11:03
92.4	79.4	90.2	79.3	88.3	80.1	85.31	85.94	83.33	84.86	-0.03	39.3	39.7	39.9	39.6	32.34	32.16	11:04
92.4	79.4	90.2	79.3	88.3	80.1	85.31	85.94	83.32	84.86	-0.04	39.3	39.8	39.8	39.6	32.35	32.17	11:05
92.4	79.4	90.2	79.3	88.3	80.1	85.32	85.95	83.34	84.87	-0.04	39.2	39.7	39.8	39.6	32.32	32.13	11:06
92.4	79.5	90.2	79.3	88.3	80.2	85.32	85.95	83.33	84.87	-0.04	39.2	39.7	39.8	39.5	32.32	32.11	11:07
92.4	79.5	90.3	79.3	88.3	80.1	85.32	85.96	83.33	84.87	-0.04	39.2	39.8	39.8	39.6	32.40	32.20	11:08
92.4	79.5	90.2	79.3	88.3	80.2	85.32	85.95	83.35	84.88	-0.04	39.2	39.7	39.8	39.6	32.39	32.20	11:09
92.4	79.4	90.3	79.3	88.3	80.1	85.32	85.96	83.34	84.88	-0.04	39.2	39.8	39.8	39.6	32.41	32.21	11:10
92.4	79.5	90.2	79.3	88.3	80.1	85.33	85.94	83.33	84.87	-0.04	39.2	39.8	39.8	39.6	32.39	32.19	11:11
92.5	79.5	90.3	79.3	88.3	80.1	85.35	85.98	83.36	84.90	-0.04	39.1	39.8	39.8	39.6	32.31	32.10	11:12
92.4	79.5	90.2	79.3	88.3	80.2	85.32	85.96	83.36	84.88	-0.04	39.2	39.8	39.9	39.6	32.32	32.14	11:13
92.4	79.5	90.2	79.3	88.3	80.2	85.32	85.95	83.36	84.88	-0.04	39.2	39.8	39.8	39.6	32.22	32.04	11:14
[illegible].4	79.5	90.3	79.3	88.3	80.1	85.34	85.97	83.35	84.89	-0.03	39.2	39.8	39.8	39.6	32.28	32.08	11:15
92.4	79.5	90.2	79.3	88.3	80.2	85.33	85.95	83.34	84.87	-0.03	39.2	39.7	39.8	39.6	32.26	32.06	11:16
92.4	79.5	90.2	79.3	88.3	80.1	85.34	85.95	83.34	84.88	-0.03	39.3	39.7	39.9	39.6	32.28	32.10	11:17
92.4	79.5	90.3	79.3	88.3	80.1	85.33	85.96	83.34	84.88	-0.03	39.2	39.7	39.8	39.6	32.27	32.07	11:18
92.5	79.5	90.3	79.3	88.3	80.2	85.35	85.96	83.34	84.88	-0.02	39.2	39.7	39.9	39.6	32.27	32.07	11:19
92.4	79.5	90.2	79.3	88.3	80.1	85.33	85.96	83.35	84.88	-0.02	39.3	39.7	39.9	39.6	32.34	32.16	11:20
92.4	79.5	90.2	79.3	88.3	80.1	85.34	85.96	83.34	84.88	-0.02	39.2	39.7	39.9	39.6	32.34	32.15	11:21
92.4	79.5	90.2	79.3	88.3	80.2	85.34	85.98	83.37	84.90	-0.01	39.3	39.8	39.9	39.7	32.43	32.26	11:22
92.5	79.5	90.3	79.3	88.3	80.1	85.34	85.99	83.37	84.90	-0.01	39.3	39.8	39.8	39.6	32.31	32.12	11:23
92.4	79.5	90.3	79.3	88.3	80.2	85.35	85.97	83.36	84.89	-0.00	39.3	39.8	39.9	39.6	32.39	32.20	11:24
92.4	79.5	90.3	79.3	88.3	80.2	85.35	85.97	83.36	84.89	0.00	39.2	39.8	39.9	39.6	32.38	32.20	11:25
92.4	79.5	90.3	79.3	88.3	80.2	85.35	85.98	83.36	84.90	0.00	39.3	39.7	39.9	39.6	32.36	32.18	11:26
92.5	79.5	90.3	79.3	88.3	80.2	85.36	85.99	83.38	84.91	0.01	39.3	39.8	39.9	39.6	32.37	32.18	11:27
92.5	79.5	90.3	79.3	88.3	80.2	85.37	85.98	83.36	84.91	0.01	39.3	39.8	39.9	39.6	32.28	32.09	11:28
92.5	79.5	90.3	79.3	88.3	80.2	85.36	85.98	83.37	84.90	0.01	39.3	39.8	39.9	39.6	32.38	32.19	11:29
92.5	79.5	90.3	79.3	88.3	80.2	85.37	86.00	83.37	84.91	0.02	39.3	39.8	39.9	39.7	32.34	32.16	11:30
92.5	79.5	90.3	79.3	88.3	80.2	85.37	85.98	83.38	84.91	0.02	39.4	39.8	40.0	39.7	32.23	32.07	11:31
92.5	79.5	90.3	79.3	88.3	80.2	85.37	85.99	83.38	84.91	0.02	39.3	39.8	40.0	39.7	32.22	32.05	11:32
92.4	79.5	90.3	79.3	88.3	80.2	85.35	86.00	83.39	84.91	0.03	39.3	39.8	40.0	39.7	32.15	31.99	11:33
92.4	79.5	90.3	79.3	88.3	80.1	85.34	85.97	83.37	84.89	0.03	39.3	39.8	40.0	39.7	32.23	32.06	11:34
92.5	79.5	90.3	79.3	88.3	80.1	85.35	85.99	83.37	84.91	0.03	39.3	39.8	39.9	39.7	32.22	32.04	11:35
92.4	79.5	90.3	79.3	88.3	80.1	85.35	85.98	83.36	84.90	0.03	39.3	39.8	39.9	39.7	32.24	32.06	11:36
92.4	79.5	90.3	79.4	88.3	80.2	85.36	85.98	83.37	84.91	0.03	39.3	39.9	39.9	39.7	32.38	32.21	11:37
92.5	79.5	90.3	79.3	88.4	80.2	85.36	86.01	83.39	84.92	0.04	39.3	39.8	39.9	39.7	32.30	32.13	11:38
92.4	79.5	90.3	79.3	88.3	80.2	85.37	85.99	83.38	84.91	0.04	39.4	39.8	40.0	39.7	32.30	32.14	11:39
92.4	79.5	90.3	79.4	88.3	80.2	85.36	85.99	83.37	84.91	0.04	39.3	39.9	39.9	39.7	32.28	32.12	11:40

COMMENTS _____

Tested By C.L. Rutledge Date 4-29-93 Reviewed By Frank A. Dewey Date 5-5-93

AMPACITY TEST. JOB NUMBER 93-0501. SAMPLE NUMBER 93-0501-04 DATA FILE BC6GNU04.001 04-30-1993 G-11

POSITION 1		POSITION 2		POSITION 3		POSITION AVERAGES			AVG		AMBIENT TEMPERATURE				AMPS		
T1mx	T1mn	T2mx	T2mn	T3mx	T3mn	T1avg	T2avg	T3avg	Twave	SLOPE	Tam1	Tam2	Tam3	Taav	It	I'	TIME
92.4	79.5	90.3	79.4	88.3	80.2	85.37	86.00	83.40	84.92	0.05	39.3	40.0	40.0	39.8	32.32	32.17	11:41
92.5	79.5	90.3	79.3	88.4	80.2	85.37	86.01	83.40	84.92	0.05	39.3	39.9	39.9	39.7	32.35	32.17	11:42
92.5	79.5	90.3	79.3	88.3	80.2	85.36	85.99	83.38	84.91	0.05	39.3	39.9	40.0	39.7	32.23	32.06	11:43
92.5	79.5	90.3	79.3	88.3	80.2	85.37	86.00	83.37	84.91	0.06	39.3	39.8	39.9	39.7	32.22	32.04	11:44
92.4	79.5	90.2	79.3	88.3	80.2	85.35	85.99	83.37	84.90	0.06	39.4	39.8	39.9	39.7	32.30	32.14	11:45
92.5	79.5	90.3	79.3	88.3	80.2	85.36	86.01	83.38	84.92	0.06	39.4	39.9	40.0	39.7	32.14	31.98	11:46
92.4	79.5	90.2	79.3	88.3	80.2	85.35	85.98	83.38	84.90	0.06	39.2	39.8	39.9	39.7	32.18	32.01	11:47
92.5	79.5	90.3	79.3	88.3	80.2	85.36	86.00	83.38	84.91	0.06	39.2	39.8	40.0	39.7	32.16	31.98	11:48
92.5	79.5	90.3	79.3	88.3	80.2	85.37	85.99	83.38	84.91	0.06	39.3	39.9	40.0	39.7	32.15	31.98	11:49
92.4	79.5	90.3	79.3	88.3	80.2	85.36	85.98	83.36	84.90	0.06	39.2	39.9	39.9	39.7	32.16	32.00	11:50
92.4	79.5	90.2	79.3	88.3	80.1	85.35	85.97	83.36	84.89	0.06	39.3	39.9	40.0	39.7	32.16	32.00	11:51
92.4	79.5	90.3	79.3	88.3	80.2	85.34	85.98	83.37	84.90	0.06	39.2	39.9	39.9	39.7	32.31	32.13	11:52
92.4	79.5	90.3	79.3	88.3	80.2	85.33	85.98	83.37	84.89	0.06	39.3	39.9	39.9	39.7	32.24	32.08	11:53
92.4	79.5	90.2	79.3	88.3	80.2	85.36	85.96	83.37	84.90	0.05	39.4	39.9	39.9	39.7	32.25	32.10	11:54
92.5	79.5	90.3	79.3	88.3	80.2	85.36	85.98	83.36	84.90	0.05	39.3	39.9	39.9	39.7	32.28	32.12	11:55
92.5	79.5	90.3	79.4	88.3	80.2	85.37	86.00	83.38	84.92	0.05	39.4	39.9	40.0	39.8	32.28	32.13	11:56
92.4	79.5	90.3	79.4	88.3	80.2	85.36	85.99	83.39	84.91	0.05	39.4	39.9	40.0	39.7	32.24	32.08	11:57
92.4	79.5	90.2	79.4	88.3	80.2	85.35	85.98	83.37	84.90	0.05	39.4	39.9	40.0	39.8	32.12	31.98	11:58
92.4	79.5	90.3	79.3	88.3	80.2	85.36	85.98	83.36	84.90	0.05	39.4	39.9	40.0	39.7	32.13	31.98	11:59
92.5	79.5	90.3	79.3	88.3	80.2	85.36	85.99	83.37	84.91	0.05	39.3	39.8	39.9	39.7	32.14	31.97	12:00
92.4	79.5	90.2	79.4	88.3	80.2	85.34	85.98	83.39	84.90	0.05	39.4	39.8	40.0	39.7	32.24	32.10	12:01
92.4	79.5	90.3	79.4	88.3	80.2	85.35	86.00	83.38	84.91	0.05	39.4	39.9	39.9	39.7	32.26	32.10	12:02
92.5	79.5	90.3	79.3	88.3	80.2	85.36	86.00	83.39	84.92	0.04	39.3	39.8	40.0	39.7	32.27	32.10	12:03
92.4	79.5	90.2	79.3	88.3	80.2	85.36	85.97	83.38	84.90	0.04	39.4	39.8	40.0	39.7	32.18	32.04	12:04
92.4	79.5	90.2	79.4	88.3	80.2	85.35	85.97	83.37	84.90	0.04	39.4	39.8	40.0	39.7	32.27	32.13	12:05
92.5	79.5	90.3	79.3	88.3	80.2	85.37	86.00	83.39	84.92	0.04	39.4	39.9	40.0	39.8	32.24	32.09	12:06
92.4	79.5	90.2	79.3	88.3	80.2	85.35	85.99	83.39	84.91	0.03	39.3	39.9	39.9	39.7	32.26	32.11	12:07
92.4	79.5	90.2	79.4	88.3	80.2	85.38	85.99	83.40	84.92	0.03	39.3	39.9	40.0	39.7	32.28	32.12	12:08
92.5	79.5	90.3	79.4	88.3	80.2	85.38	85.99	83.39	84.92	0.03	39.3	39.9	40.0	39.7	32.28	32.11	12:09
92.5	79.5	90.3	79.3	88.4	80.2	85.38	86.00	83.40	84.93	0.03	39.3	39.9	40.0	39.7	32.28	32.12	12:10
92.4	79.5	90.2	79.4	88.3	80.2	85.37	85.99	83.39	84.92	0.03	39.4	39.9	40.0	39.8	32.31	32.17	12:11
92.5	79.5	90.3	79.3	88.3	80.2	85.38	85.99	83.39	84.92	0.03	39.4	39.9	39.9	39.8	32.34	32.19	12:12
92.4	79.5	90.3	79.4	88.4	80.2	85.38	86.02	83.41	84.94	0.03	39.5	40.0	40.0	39.8	32.25	32.12	12:13
92.5	79.5	90.3	79.4	88.3	80.2	85.37	86.02	83.40	84.93	0.03	39.4	39.9	39.9	39.8	32.25	32.09	12:14
92.5	79.5	90.3	79.4	88.3	80.2	85.39	86.01	83.41	84.94	0.03	39.4	39.9	40.0	39.8	32.27	32.12	12:15
92.5	79.5	90.3	79.4	88.3	80.2	85.38	86.03	83.40	84.94	0.03	39.4	39.9	40.1	39.8	32.29	32.15	12:16
92.4	79.5	90.3	79.4	88.3	80.2	85.37	86.00	83.40	84.92	0.03	39.4	39.9	40.1	39.8	32.29	32.16	12:17
92.5	79.5	90.3	79.4	88.3	80.2	85.37	86.01	83.41	84.93	0.03	39.4	39.9	40.1	39.8	32.16	32.02	12:18
92.4	79.5	90.3	79.4	88.3	80.2	85.39	86.00	83.40	84.93	0.03	39.4	40.0	40.1	39.8	32.19	32.06	12:19
92.4	79.5	90.3	79.4	88.3	80.2	85.38	85.99	83.39	84.92	0.03	39.5	40.0	40.1	39.8	32.19	32.07	12:20
92.5	79.5	90.3	79.4	88.3	80.2	85.37	86.02	83.41	84.93	0.03	39.4	40.0	40.0	39.8	32.14	32.01	12:21
92.5	79.5	90.3	79.3	88.3	80.2	85.39	86.00	83.37	84.92	0.03	39.5	40.0	40.1	39.9	32.22	32.10	12:22
92.4	79.5	90.2	79.4	88.3	80.2	85.37	86.02	83.39	84.93	0.03	39.4	40.0	40.0	39.8	32.18	32.05	12:23
92.5	79.5	90.3	79.4	88.3	80.2	85.37	86.01	83.39	84.92	0.02	39.5	40.0	40.1	39.9	32.24	32.13	12:24
92.4	79.5	90.2	79.4	88.3	80.2	85.37	86.00	83.39	84.92	0.02	39.4	40.0	40.1	39.8	32.21	32.10	12:25
92.4	79.6	90.2	79.4	88.3	80.2	85.38	85.99	83.39	84.92	0.02	39.5	40.0	40.2	39.9	32.27	32.17	12:26
92.5	79.5	90.3	79.4	88.4	80.2	85.39	86.02	83.41	84.94	0.03	39.5	40.0	40.1	39.9	32.25	32.13	12:27
92.4	79.5	90.3	79.4	88.3	80.2	85.37	86.01	83.40	84.93	0.03	39.4	39.9	40.1	39.8	32.31	32.18	12:28
92.4	79.6	90.3	79.4	88.4	80.2	85.39	86.03	83.43	84.95	0.03	39.4	39.9	40.2	39.8	32.30	32.17	12:29
92.5	79.6	90.3	79.4	88.3	80.2	85.39	86.02	83.42	84.94	0.03	39.4	40.0	40.1	39.8	32.22	32.09	12:30
92.4	79.5	90.3	79.4	88.3	80.2	85.38	86.03	83.40	84.93	0.03	39.4	40.0	40.0	39.8	32.20	32.07	12:31
92.4	79.6	90.3	79.4	88.3	80.2	85.39	86.00	83.41	84.93	0.03	39.5	40.0	40.1	39.9	32.24	32.12	12:32
92.4	79.6	90.3	79.4	88.3	80.2	85.39	86.01	83.40	84.93	0.03	39.5	40.1	40.1	39.9	32.23	32.13	12:33
92.5	79.5	90.3	79.4	88.3	80.2	85.38	86.03	83.42	84.94	0.03	39.5	40.0	40.2	39.9	32.18	32.07	12:34
92.5	79.6	90.3	79.4	88.3	80.2	85.40	86.03	83.41	84.95	0.04	39.6	40.0	40.1	39.9	32.14	32.03	12:35
92.5	79.5	90.3	79.4	88.3	80.3	85.38	86.03	83.42	84.95	0.04	39.5	40.0	40.1	39.9	32.16	32.05	12:36
92.4	79.6	90.3	79.4	88.4	80.2	85.38	86.02	83.42	84.94	0.04	39.5	40.0	40.1	39.9	32.18	32.07	12:37
92.5	79.5	90.3	79.4	88.4	80.2	85.37	86.02	83.41	84.93	0.04	39.6	40.0	40.1	39.9	32.17	32.06	12:38
92.4	79.5	90.3	79.4	88.3	80.2	85.38	86.01	83.40	84.93	0.04	39.6	40.0	40.2	39.9	32.15	32.05	12:39
92.5	79.6	90.3	79.4	88.3	80.2	85.39	86.02	83.40	84.94	0.04	39.5	40.1	40.2	39.9	32.29	32.19	12:40

COMMENTS _____

Tested By C.L. Lutledge Date 4-29-93 Reviewed By Frank A. Weiney Date 5-5-93

AMPACITY TEST. JOB NUMBER 93-0501. SAMPLE NUMBER 93-0501-04 DATA FILE 8C66ND04.001 04-30-1993 G-12

POSITION 1		POSITION 2		POSITION 3		POSITION AVERAGES			AVG		AMBIENT TEMPERATURE				AMPS		
T1mx	T1mn	T2mx	T2mn	T3mx	T3mn	T1avg	T2avg	T3avg	Twave	SLOPE	Tam1	Tam2	Tam3	Taav	It	I'	TIME
[illegible]5	79.6	90.3	79.4	88.4	80.2	85.39	86.02	83.42	84.94	0.04	39.4	40.0	40.1	39.9	32.17	32.05	12:41
[illegible]	79.6	90.3	79.4	88.3	80.2	85.38	86.00	83.42	84.93	0.04	39.4	40.1	40.1	39.9	32.22	32.11	12:42
92.5	79.6	90.3	79.4	88.4	80.2	85.39	86.04	83.43	84.95	0.04	39.5	40.0	40.1	39.9	32.28	32.17	12:43
92.4	79.6	90.3	79.4	88.3	80.2	85.39	86.01	83.41	84.94	0.05	39.5	40.0	40.1	39.9	32.28	32.17	12:44
92.4	79.6	90.3	79.4	88.3	80.2	85.40	86.02	83.41	84.94	0.05	39.4	40.0	40.1	39.8	32.27	32.15	12:45
92.4	79.6	90.3	79.4	88.3	80.3	85.38	86.01	83.43	84.94	0.05	39.4	40.1	40.2	39.9	32.21	32.10	12:46
92.4	79.6	90.3	79.4	88.4	80.2	85.39	86.04	83.44	84.96	0.05	39.6	40.1	40.2	39.9	32.28	32.19	12:47
92.5	79.6	90.3	79.4	88.4	80.2	85.41	86.05	83.43	84.96	0.05	39.6	40.1	40.2	40.0	32.19	32.09	12:48
92.5	79.6	90.3	79.4	88.4	80.2	85.39	86.03	83.43	84.95	0.05	39.5	40.0	40.2	39.9	32.12	32.01	12:49
92.4	79.6	90.3	79.4	88.4	80.2	85.39	86.03	83.43	84.95	0.05	39.5	40.0	40.1	39.9	32.14	32.03	12:50
92.4	79.5	90.3	79.4	88.3	80.2	85.37	86.02	83.40	84.93	0.05	39.5	40.0	40.1	39.9	32.08	31.97	12:51
92.5	79.6	90.3	79.4	88.3	80.2	85.38	86.01	83.41	84.93	0.05	39.5	40.0	40.1	39.9	32.04	31.94	12:52
92.5	79.6	90.3	79.4	88.4	80.2	85.40	86.04	83.42	84.95	0.05	39.5	40.1	40.2	40.0	32.13	32.04	12:53
92.4	79.6	90.2	79.4	88.3	80.2	85.36	86.00	83.42	84.93	0.04	39.5	40.1	40.2	39.9	32.11	32.02	12:54
92.5	79.5	90.3	79.4	88.4	80.2	85.38	86.02	83.43	84.94	0.04	39.6	40.1	40.2	40.0	32.11	32.03	12:55
92.4	79.6	90.2	79.4	88.3	80.2	85.36	86.01	83.41	84.93	0.04	39.6	40.1	40.2	40.0	32.18	32.11	12:56
92.4	79.6	90.3	79.4	88.3	80.2	85.37	85.99	83.39	84.92	0.04	39.6	40.2	40.3	40.0	32.25	32.19	12:57
92.4	79.5	90.3	79.4	88.4	80.2	85.36	86.02	83.42	84.94	0.03	39.5	40.1	40.2	39.9	32.25	32.16	12:58
92.4	79.6	90.3	79.4	88.3	80.3	85.38	86.00	83.42	84.93	0.03	39.5	40.1	40.3	40.0	32.29	32.21	12:59
92.4	79.6	90.3	79.4	88.3	80.2	85.39	86.01	83.41	84.93	0.03	39.6	40.1	40.2	40.0	32.29	32.20	13:00
92.4	79.6	90.3	79.4	88.3	80.2	85.41	86.02	83.42	84.95	0.03	39.5	40.1	40.2	40.0	32.29	32.20	13:01
92.4	79.6	90.3	79.4	88.4	80.3	85.40	86.02	83.43	84.95	0.03	39.5	40.1	40.2	39.9	32.21	32.11	13:02
92.4	79.6	90.3	79.4	88.3	80.3	85.41	86.03	83.42	84.95	0.03	39.5	40.1	40.2	39.9	32.18	32.09	13:03
92.4	79.6	90.3	79.4	88.3	80.2	85.38	86.01	83.42	84.94	0.03	39.6	40.1	40.3	40.0	32.11	32.04	13:04
92.5	79.6	90.3	79.4	88.3	80.2	85.41	86.03	83.41	84.95	0.02	39.6	40.2	40.3	40.0	32.18	32.10	13:05
92.4	79.6	90.3	79.4	88.3	80.2	85.40	86.01	83.41	84.94	0.02	39.6	40.1	40.4	40.0	32.18	32.12	13:06
92.4	79.6	90.3	79.4	88.4	80.3	85.40	86.02	83.44	84.95	0.02	39.6	40.1	40.2	40.0	32.20	32.11	13:07
92.5	79.6	90.3	79.4	88.4	80.2	85.42	86.06	83.45	84.98	0.02	39.6	40.1	40.3	40.0	32.17	32.08	13:08
92.4	79.6	90.3	79.4	88.3	80.3	85.40	86.02	83.43	84.95	0.02	39.6	40.2	40.3	40.0	32.14	32.07	13:09
92.4	79.6	90.3	79.4	88.3	80.3	85.40	86.03	83.43	84.95	0.02	39.6	40.1	40.3	40.0	32.14	32.08	13:10
92.4	79.6	90.3	79.4	88.3	80.2	85.39	86.02	83.43	84.95	0.02	39.5	40.2	40.3	40.0	32.13	32.06	13:11
92.4	79.6	90.3	79.4	88.4	80.2	85.40	86.04	83.45	84.96	0.02	39.6	40.2	40.3	40.0	32.06	32.00	13:12
92.5	79.6	90.3	79.4	88.4	80.2	85.41	86.05	83.45	84.97	0.03	39.6	40.3	40.3	40.1	32.29	32.23	13:13
92.4	79.6	90.3	79.4	88.4	80.2	85.41	86.05	83.44	84.97	0.03	39.6	40.3	40.3	40.1	32.24	32.20	13:14
[illegible]5	79.6	90.3	79.4	88.4	80.3	85.41	86.06	83.46	84.97	0.03	39.7	40.2	40.4	40.1	32.29	32.24	13:15
[illegible]5	79.6	90.3	79.4	88.4	80.3	85.42	86.06	83.45	84.97	0.03	39.6	40.3	40.3	40.1	32.24	32.18	13:16
92.5	79.6	90.3	79.4	88.4	80.3	85.43	86.07	83.46	84.99	0.04	39.6	40.2	40.4	40.1	32.19	32.13	13:17
92.4	79.6	90.3	79.5	88.3	80.3	85.43	86.05	83.45	84.97	0.04	39.6	40.2	40.3	40.1	32.18	32.12	13:18
92.5	79.6	90.3	79.4	88.4	80.3	85.43	86.07	83.45	84.98	0.04	39.6	40.2	40.4	40.1	32.23	32.16	13:19
92.5	79.6	90.3	79.4	88.4	80.2	85.44	86.06	83.47	84.99	0.04	39.7	40.3	40.4	40.1	32.23	32.18	13:20
92.5	79.6	90.3	79.5	88.3	80.3	85.43	86.05	83.45	84.98	0.05	39.7	40.3	40.4	40.1	32.18	32.13	13:21
92.5	79.6	90.3	79.5	88.3	80.3	85.44	86.06	83.46	84.99	0.05	39.8	40.3	40.5	40.2	32.11	32.07	13:22
92.5	79.6	90.3	79.4	88.4	80.3	85.43	86.05	83.46	84.98	0.05	39.7	40.3	40.4	40.1	32.14	32.09	13:23
92.5	79.6	90.3	79.4	88.4	80.3	85.43	86.07	83.48	84.99	0.05	39.8	40.3	40.4	40.1	32.17	32.13	13:24
92.5	79.6	90.3	79.5	88.4	80.3	85.45	86.07	83.47	85.00	0.05	39.8	40.3	40.5	40.2	32.13	32.10	13:25
92.4	79.6	90.3	79.4	88.3	80.3	85.44	86.05	83.44	84.98	0.05	39.7	40.4	40.4	40.2	32.09	32.07	13:26
92.4	79.6	90.3	79.4	88.3	80.3	85.43	86.05	83.45	84.97	0.05	39.7	40.3	40.5	40.2	32.04	32.01	13:27
92.5	79.6	90.3	79.5	88.3	80.3	85.44	86.06	83.45	84.98	0.05	39.7	40.3	40.5	40.2	32.03	32.01	13:28
92.4	79.6	90.3	79.5	88.3	80.3	85.42	86.04	83.45	84.97	0.05	39.7	40.3	40.4	40.2	32.07	32.05	13:29
92.5	79.6	90.3	79.4	88.4	80.3	85.43	86.06	83.45	84.98	0.06	39.8	40.3	40.5	40.2	32.09	32.06	13:30
92.5	79.6	90.3	79.4	88.4	80.3	85.44	86.07	83.47	84.99	0.06	39.7	40.3	40.5	40.2	32.23	32.21	13:31
92.5	79.6	90.3	79.5	88.4	80.3	85.44	86.08	83.48	85.00	0.06	39.7	40.3	40.5	40.2	32.20	32.17	13:32
92.5	79.6	90.3	79.4	88.4	80.3	85.45	86.08	83.48	85.00	0.06	39.8	40.3	40.5	40.2	32.21	32.20	13:33
92.4	79.6	90.3	79.5	88.4	80.3	85.45	86.06	83.47	84.99	0.06	39.7	40.3	40.5	40.2	32.22	32.20	13:34
92.5	79.6	90.3	79.5	88.4	80.3	85.45	86.08	83.47	85.00	0.07	39.8	40.3	40.5	40.2	32.24	32.22	13:35
92.5	79.6	90.3	79.5	88.4	80.3	85.46	86.09	83.49	85.01	0.07	39.8	40.4	40.5	40.2	32.18	32.17	13:36
92.5	79.7	90.3	79.5	88.4	80.3	85.46	86.08	83.48	85.01	0.07	39.8	40.4	40.5	40.2	32.18	32.16	13:37
92.4	79.6	90.3	79.4	88.4	80.3	85.44	86.07	83.48	85.00	0.07	39.8	40.4	40.6	40.2	32.10	32.11	13:38
92.5	79.6	90.3	79.5	88.4	80.3	85.46	86.09	83.49	85.01	0.08	39.8	40.4	40.5	40.3	32.17	32.17	13:39
92.5	79.6	90.3	79.5	88.4	80.3	85.46	86.08	83.50	85.01	0.08	39.8	40.5	40.6	40.3	32.12	32.13	13:40

COMMENTS _____

Tested By C.L. Rutledge Date 4-29-93 Reviewed by Frank C. Denney Date 5-5-93

AMPACITY TEST. JOB NUMBER 93-0501. SAMPLE NUMBER 93-0501-09 DATA FILE BC6GN009.001 05-07-1993

POSITION 1		POSITION 2		POSITION 3		POSITION AVERAGES			AVG		AMBIENT TEMPERATURE				AMPS		
T1mx	T1mn	T2mx	T2mn	T3mx	T3mn	T1avg	T2avg	T3avg	Twave	SLOPE	Tam1	Tam2	Tam3	Taav	It	I'	TIME
89.9	79.2	89.7	80.5	90.7	81.5	84.25	83.95	84.71	84.31	-0.11	39.6	40.0	39.8	39.8	33.33	33.33	10:51
89.9	79.3	89.8	80.5	90.7	81.5	84.25	83.96	84.71	84.30	-0.10	39.5	40.0	39.7	39.8	33.28	33.26	10:52
90.0	79.2	89.8	80.5	90.7	81.5	84.26	83.97	84.72	84.32	-0.09	39.5	39.9	39.8	39.7	33.27	33.25	10:53
89.9	79.3	89.8	80.5	90.7	81.5	84.26	83.97	84.69	84.31	-0.08	39.6	40.0	39.8	39.8	33.33	33.31	10:54
89.9	79.2	89.7	80.5	90.7	81.5	84.25	83.96	84.69	84.30	-0.07	39.5	40.0	39.8	39.8	33.28	33.28	10:55
89.9	79.2	89.8	80.5	90.7	81.5	84.24	83.95	84.70	84.30	-0.07	39.6	40.0	39.8	39.8	33.22	33.23	10:56
89.9	79.2	89.8	80.6	90.7	81.5	84.26	83.98	84.71	84.32	-0.06	39.6	40.0	39.8	39.8	33.20	33.19	10:57
89.9	79.2	89.8	80.5	90.7	81.5	84.24	83.96	84.71	84.30	-0.05	39.5	40.1	39.9	39.8	33.28	33.30	10:58
89.9	79.2	89.8	80.5	90.7	81.5	84.25	83.96	84.71	84.31	-0.04	39.6	40.0	39.9	39.8	33.24	33.24	10:59
89.9	79.2	89.8	80.6	90.7	81.5	84.25	83.98	84.71	84.31	-0.03	39.6	40.0	39.9	39.8	33.18	33.18	11:00
89.9	79.2	89.8	80.5	90.7	81.5	84.25	83.96	84.72	84.31	-0.03	39.5	40.0	39.8	39.8	33.35	33.33	11:01
89.9	79.2	89.7	80.5	90.7	81.5	84.25	83.95	84.70	84.30	-0.02	39.6	40.0	39.8	39.8	33.22	33.23	11:02
89.9	79.3	89.8	80.5	90.7	81.5	84.26	83.97	84.70	84.31	-0.01	39.6	40.0	39.8	39.8	33.28	33.27	11:03
89.9	79.3	89.8	80.5	90.7	81.5	84.26	83.96	84.70	84.30	-0.01	39.6	40.0	39.7	39.8	33.21	33.21	11:04
89.9	79.3	89.8	80.5	90.7	81.5	84.25	83.96	84.71	84.31	-0.00	39.6	40.0	39.9	39.8	33.29	33.29	11:05
89.9	79.2	89.8	80.5	90.7	81.5	84.26	83.98	84.71	84.32	0.00	39.6	40.1	39.9	39.9	33.26	33.26	11:06
89.9	79.3	89.8	80.5	90.7	81.5	84.26	83.96	84.70	84.30	0.01	39.7	40.1	39.9	39.9	33.26	33.28	11:07
89.9	79.2	89.7	80.5	90.7	81.5	84.25	83.94	84.68	84.29	0.01	39.6	40.0	39.8	39.8	33.22	33.24	11:08
89.9	79.3	89.8	80.5	90.7	81.5	84.26	83.98	84.71	84.32	0.02	39.6	40.1	39.8	39.8	33.31	33.31	11:09
89.9	79.3	89.8	80.5	90.7	81.5	84.26	83.98	84.72	84.32	0.02	39.6	40.0	39.9	39.8	33.38	33.38	11:10
89.9	79.3	89.8	80.5	90.7	81.5	84.25	83.97	84.69	84.30	0.03	39.6	40.0	39.8	39.8	33.33	33.32	11:11
89.9	79.2	89.8	80.5	90.7	81.5	84.26	83.97	84.72	84.32	0.03	39.7	40.1	40.0	39.9	33.33	33.36	11:12
89.9	79.3	89.8	80.6	90.7	81.5	84.26	83.97	84.71	84.31	0.03	39.6	40.1	39.8	39.8	33.35	33.36	11:13
89.9	79.3	89.8	80.5	90.7	81.5	84.28	83.99	84.72	84.33	0.04	39.7	40.1	40.0	39.9	33.37	33.40	11:14
89.9	79.3	89.7	80.5	90.7	81.5	84.26	83.96	84.70	84.31	0.04	39.6	40.1	39.9	39.9	33.29	33.31	11:15
89.9	79.3	89.8	80.5	90.7	81.5	84.26	83.98	84.72	84.32	0.04	39.6	40.2	39.8	39.9	33.39	33.40	11:16
89.9	79.3	89.7	80.5	90.7	81.5	84.26	83.96	84.70	84.31	0.04	39.7	40.1	40.0	39.9	33.31	33.36	11:17
89.9	79.3	89.8	80.6	90.7	81.5	84.26	83.99	84.73	84.33	0.04	39.6	40.1	39.8	39.9	33.30	33.29	11:18
90.0	79.3	89.8	80.5	90.7	81.5	84.27	83.97	84.73	84.32	0.04	39.7	40.0	39.9	39.9	33.26	33.28	11:19
90.0	79.3	89.8	80.5	90.7	81.5	84.28	83.99	84.74	84.33	0.05	39.7	40.1	39.9	39.9	33.24	33.26	11:20
90.0	79.3	89.8	80.5	90.7	81.5	84.28	83.99	84.73	84.33	0.05	39.7	40.1	39.8	39.9	33.25	33.26	11:21
90.0	79.3	89.8	80.5	90.7	81.6	84.28	83.98	84.73	84.33	0.05	39.6	40.0	39.9	39.9	33.24	33.25	11:22
89.9	79.3	89.8	80.6	90.7	81.5	84.27	83.99	84.73	84.33	0.04	39.7	40.1	39.9	39.9	33.22	33.23	11:23
89.9	79.3	89.8	80.6	90.7	81.5	84.27	83.98	84.73	84.33	0.04	39.7	40.1	39.9	39.9	33.29	33.31	11:24
90.0	79.3	89.8	80.5	90.7	81.5	84.28	83.97	84.71	84.32	0.04	39.8	40.0	39.9	39.9	33.21	33.25	11:25
89.9	79.3	89.8	80.5	90.7	81.5	84.26	83.96	84.70	84.31	0.04	39.7	40.2	40.0	40.0	33.27	33.32	11:26
89.9	79.2	89.8	80.5	90.7	81.5	84.23	83.95	84.70	84.29	0.03	39.7	40.1	39.9	39.9	33.28	33.32	11:27
89.9	79.3	89.8	80.6	90.7	81.5	84.26	83.98	84.72	84.32	0.03	39.7	40.2	40.0	40.0	33.18	33.21	11:28
89.9	79.2	89.8	80.6	90.7	81.6	84.25	83.99	84.75	84.33	0.03	39.8	40.2	39.9	40.0	33.35	33.38	11:29
90.0	79.3	89.8	80.6	90.7	81.5	84.29	83.98	84.73	84.33	0.03	39.8	40.2	40.0	40.0	33.36	33.42	11:30
90.0	79.3	89.8	80.5	90.7	81.5	84.28	83.98	84.73	84.33	0.03	39.7	40.2	40.0	39.9	33.35	33.40	11:31
90.0	79.3	89.8	80.6	90.7	81.5	84.29	83.99	84.73	84.34	0.03	39.7	40.2	40.0	40.0	33.24	33.30	11:32
90.0	79.3	89.8	80.5	90.7	81.5	84.28	83.99	84.75	84.34	0.04	39.7	40.2	40.0	40.0	33.27	33.32	11:33
89.9	79.3	89.8	80.6	90.7	81.5	84.28	83.99	84.73	84.33	0.04	39.7	40.2	40.0	40.0	33.20	33.24	11:34
89.9	79.3	89.8	80.6	90.7	81.5	84.28	83.99	84.74	84.33	0.03	39.7	40.2	40.0	40.0	33.28	33.33	11:35
89.9	79.3	89.8	80.6	90.8	81.6	84.29	84.01	84.75	84.35	0.04	39.8	40.2	40.0	40.0	33.26	33.29	11:36
89.9	79.3	89.8	80.6	90.7	81.5	84.29	84.00	84.73	84.34	0.04	39.8	40.1	40.0	40.0	33.33	33.37	11:37
89.9	79.3	89.8	80.6	90.7	81.5	84.29	83.99	84.73	84.34	0.04	39.8	40.2	40.1	40.0	33.36	33.42	11:38
90.0	79.3	89.8	80.6	90.7	81.5	84.28	83.99	84.75	84.34	0.04	39.7	40.2	40.0	39.9	33.27	33.31	11:39
90.0	79.3	89.8	80.6	90.8	81.6	84.29	84.00	84.76	84.35	0.04	39.8	40.1	40.0	40.0	33.27	33.31	11:40
89.9	79.3	89.8	80.6	90.7	81.5	84.29	83.99	84.75	84.34	0.04	39.7	40.2	40.0	40.0	33.25	33.30	11:41
89.9	79.3	89.8	80.6	90.7	81.6	84.27	84.00	84.75	84.34	0.04	39.7	40.3	40.0	40.0	33.28	33.33	11:42
89.9	79.3	89.8	80.6	90.7	81.6	84.30	84.01	84.74	84.35	0.04	39.8	40.3	40.2	40.1	33.21	33.28	11:43
90.0	79.3	89.8	80.5	90.7	81.5	84.29	83.98	84.73	84.33	0.04	39.8	40.3	40.1	40.1	33.20	33.28	11:44
90.0	79.3	89.8	80.6	90.8	81.6	84.29	84.00	84.76	84.35	0.04	39.6	40.3	40.1	40.1	33.16	33.24	11:45
89.9	79.3	89.8	80.6	90.7	81.6	84.30	84.02	84.75	84.36	0.05	39.8	40.3	40.1	40.0	33.24	33.30	11:46
89.9	79.3	89.8	80.6	90.7	81.5	84.30	84.00	84.74	84.35	0.05	39.8	40.2	40.1	40.0	33.25	33.30	11:47
90.0	79.3	89.8	80.6	90.7	81.6	84.28	83.99	84.76	84.35	0.05	39.9	40.3	40.1	40.1	33.30	33.39	11:48
89.9	79.3	89.8	80.6	90.7	81.5	84.27	83.98	84.75	84.33	0.05	39.9	40.3	40.1	40.1	33.25	33.34	11:49
90.0	79.3	89.8	80.6	90.8	81.6	84.30	84.00	84.76	84.36	0.05	39.8	40.3	40.2	40.1	33.36	33.46	11:50

COMMENTS

Tested By C L Lutledge Date 5-7-93 Reviewed By Frank L. Dunney Date 5-7-93

AMPACITY TEST. JOB NUMBER 93-0501. SAMPLE NUMBER 93-0501-09 DATA FILE BC6GN009.001 05-07-1993 G-14

POSITION 1		POSITION 2		POSITION 3		_POSITION AVERAGES_			AVG		AMBIENT TEMPERATURE				AMPS		
T1mx	T1mn	T2mx	T2mn	T3mx	T3mn	T1avg	T2avg	T3avg	Twave	SLOPE	Tam1	Tam2	Tam3	Taav	It	I'	TIME
90.0	79.3	89.8	80.6	90.8	81.6	84.31	84.01	84.76	84.36	0.05	39.9	40.3	40.0	40.1	33.34	33.42	11:51
90.0	79.3	89.8	80.6	90.7	81.6	84.30	84.00	84.75	84.35	0.05	40.0	40.3	40.2	40.2	33.31	33.42	11:52
90.0	79.3	89.9	80.6	90.8	81.6	84.33	84.04	84.77	84.38	0.06	40.0	40.3	40.3	40.2	33.41	33.52	11:53
90.0	79.3	89.9	80.6	90.8	81.6	84.33	84.04	84.78	84.38	0.06	39.9	40.3	40.2	40.1	33.26	33.35	11:54
90.0	79.3	89.8	80.6	90.8	81.6	84.31	84.02	84.79	84.37	0.06	40.0	40.4	40.3	40.2	33.37	33.49	11:55
90.0	79.3	89.9	80.6	90.8	81.6	84.32	84.03	84.79	84.38	0.06	40.0	40.3	40.2	40.2	33.31	33.41	11:56
90.0	79.3	89.8	80.6	90.8	81.6	84.33	84.03	84.79	84.39	0.07	39.9	40.3	40.2	40.1	33.35	33.45	11:57
90.0	79.3	89.8	80.6	90.7	81.6	84.32	84.02	84.78	84.37	0.07	39.9	40.3	40.2	40.1	33.27	33.37	11:58
90.0	79.3	89.8	80.6	90.8	81.6	84.32	84.01	84.77	84.37	0.07	40.0	40.4	40.2	40.2	33.34	33.47	11:59
90.0	79.3	89.9	80.6	90.8	81.6	84.33	84.04	84.80	84.39	0.07	40.0	40.4	40.3	40.2	33.39	33.50	12:00
90.0	79.3	89.9	80.7	90.8	81.6	84.33	84.06	84.81	84.40	0.08	39.9	40.4	40.2	40.2	33.34	33.44	12:01
90.0	79.3	89.9	80.6	90.8	81.6	84.35	84.08	84.81	84.41	0.08	40.0	40.4	40.3	40.2	33.38	33.47	12:02
90.0	79.4	89.8	80.6	90.8	81.6	84.35	84.04	84.80	84.40	0.08	40.0	40.4	40.3	40.2	33.31	33.44	12:03
90.0	79.4	89.9	80.6	90.8	81.6	84.36	84.08	84.82	84.42	0.09	40.0	40.4	40.4	40.2	33.35	33.46	12:04
90.0	79.4	89.9	80.7	90.8	81.6	84.36	84.08	84.81	84.42	0.09	40.1	40.5	40.3	40.3	33.26	33.37	12:05
90.0	79.4	89.9	80.7	90.8	81.6	84.35	84.06	84.82	84.41	0.10	40.1	40.5	40.3	40.3	33.35	33.48	12:06
90.0	79.4	89.9	80.7	90.8	81.7	84.35	84.09	84.85	84.43	0.10	40.1	40.4	40.3	40.3	33.33	33.44	12:07
90.0	79.4	89.9	80.7	90.8	81.7	84.37	84.10	84.85	84.44	0.10	40.1	40.4	40.4	40.3	33.32	33.44	12:08
90.0	79.4	89.9	80.7	90.8	81.7	84.37	84.10	84.85	84.44	0.11	40.0	40.4	40.3	40.3	33.35	33.46	12:09
90.0	79.4	89.8	80.7	90.8	81.7	84.38	84.07	84.84	84.43	0.11	40.0	40.5	40.3	40.3	33.26	33.39	12:10
90.0	79.4	89.9	80.7	90.8	81.7	84.39	84.11	84.85	84.45	0.12	40.0	40.5	40.3	40.3	33.26	33.38	12:11
90.1	79.4	89.9	80.6	90.8	81.7	84.38	84.08	84.84	84.44	0.12	40.1	40.5	40.3	40.3	33.24	33.37	12:12
90.0	79.4	89.9	80.7	90.8	81.7	84.39	84.10	84.85	84.45	0.13	40.0	40.5	40.4	40.3	33.30	33.42	12:13
90.0	79.4	89.9	80.7	90.8	81.7	84.38	84.09	84.85	84.44	0.13	40.2	40.5	40.3	40.3	33.30	33.44	12:14
90.1	79.4	89.9	80.7	90.8	81.6	84.39	84.09	84.85	84.44	0.13	40.1	40.5	40.4	40.3	33.27	33.42	12:15
90.0	79.4	89.9	80.7	90.8	81.7	84.40	84.11	84.85	84.45	0.14	40.1	40.5	40.4	40.3	33.31	33.44	12:16
90.1	79.4	89.9	80.7	90.8	81.7	84.39	84.10	84.86	84.45	0.14	40.1	40.5	40.5	40.4	33.32	33.47	12:17
90.1	79.4	89.9	80.7	90.8	81.7	84.39	84.10	84.87	84.45	0.15	40.1	40.5	40.3	40.3	33.28	33.42	12:18
90.0	79.4	89.9	80.7	90.8	81.7	84.39	84.11	84.85	84.45	0.15	40.0	40.5	40.4	40.3	33.12	33.25	12:19
90.0	79.4	89.9	80.7	90.8	81.7	84.39	84.09	84.85	84.44	0.15	40.1	40.5	40.4	40.3	33.07	33.21	12:20
90.0	79.4	89.9	80.7	90.8	81.7	84.40	84.10	84.85	84.45	0.15	40.1	40.5	40.4	40.3	33.10	33.24	12:21
90.0	79.4	89.9	80.7	90.8	81.6	84.38	84.09	84.83	84.43	0.16	40.1	40.5	40.4	40.3	33.04	33.18	12:22
90.0	79.4	89.9	80.7	90.8	81.7	84.38	84.10	84.86	84.44	0.16	40.1	40.6	40.4	40.4	33.04	33.19	12:23
90.0	79.4	89.8	80.7	90.8	81.6	84.38	84.07	84.82	84.43	0.16	40.1	40.5	40.4	40.4	33.11	33.28	12:24
90.0	79.4	89.9	80.7	90.8	81.7	84.38	84.10	84.85	84.44	0.16	40.1	40.5	40.5	40.4	33.15	33.29	12:25
90.0	79.4	89.9	80.7	90.8	81.7	84.38	84.10	84.85	84.44	0.15	40.1	40.5	40.4	40.3	33.20	33.33	12:26
90.0	79.4	89.9	80.7	90.8	81.7	84.37	84.10	84.85	84.44	0.15	40.1	40.5	40.4	40.3	33.12	33.26	12:27
90.0	79.4	89.9	80.7	90.8	81.7	84.39	84.11	84.84	84.44	0.15	40.1	40.5	40.4	40.4	33.23	33.37	12:28
90.0	79.4	89.9	80.7	90.8	81.7	84.40	84.11	84.86	84.46	0.15	40.1	40.5	40.4	40.3	33.16	33.28	12:29
90.0	79.4	89.9	80.7	90.8	81.7	84.37	84.08	84.85	84.44	0.15	40.1	40.5	40.3	40.3	33.15	33.29	12:30
90.0	79.4	89.9	80.7	90.8	81.7	84.39	84.11	84.85	84.45	0.14	40.1	40.6	40.3	40.3	33.08	33.22	12:31
90.0	79.4	89.9	80.7	90.8	81.7	84.38	84.10	84.86	84.44	0.14	40.1	40.5	40.4	40.3	33.12	33.26	12:32
90.0	79.4	89.9	80.7	90.8	81.7	84.39	84.10	84.83	84.44	0.14	40.2	40.5	40.4	40.4	33.14	33.29	12:33
90.0	79.4	89.9	80.7	90.8	81.7	84.38	84.10	84.86	84.44	0.14	40.1	40.5	40.4	40.3	33.12	33.27	12:34
90.0	79.4	89.8	80.7	90.8	81.7	84.38	84.08	84.85	84.44	0.14	40.1	40.5	40.4	40.3	33.04	33.20	12:35
90.0	79.4	89.8	80.7	90.8	81.6	84.38	84.07	84.82	84.42	0.13	40.1	40.5	40.3	40.3	32.95	33.10	12:36
90.0	79.4	89.9	80.7	90.8	81.7	84.40	84.10	84.83	84.44	0.13	40.1	40.5	40.3	40.3	33.11	33.23	12:37
90.0	79.4	89.9	80.7	90.8	81.7	84.38	84.10	84.84	84.44	0.13	40.0	40.4	40.3	40.3	33.06	33.18	12:38
90.0	79.4	89.8	80.7	90.8	81.7	84.38	84.08	84.84	84.43	0.12	40.1	40.4	40.4	40.3	33.12	33.26	12:39
90.0	79.4	89.8	80.7	90.8	81.6	84.37	84.07	84.82	84.42	0.12	40.1	40.5	40.3	40.3	33.06	33.20	12:40
90.0	79.4	89.9	80.7	90.8	81.7	84.36	84.08	84.84	84.43	0.11	40.0	40.4	40.3	40.2	32.99	33.10	12:41
90.0	79.4	89.8	80.7	90.8	81.7	84.38	84.07	84.84	84.43	0.11	40.0	40.4	40.2	40.2	33.04	33.16	12:42
90.0	79.4	89.8	80.7	90.8	81.7	84.36	84.08	84.85	84.43	0.10	40.0	40.4	40.2	40.2	33.13	33.24	12:43
90.0	79.4	89.8	80.7	90.8	81.7	84.37	84.08	84.83	84.43	0.09	39.9	40.4	40.2	40.2	33.08	33.19	12:44
90.0	79.4	89.8	80.6	90.8	81.7	84.37	84.07	84.83	84.42	0.09	40.0	40.3	40.2	40.2	33.03	33.15	12:45
90.0	79.4	89.8	80.7	90.8	81.6	84.36	84.07	84.82	84.41	0.08	39.9	40.5	40.3	40.2	33.00	33.12	12:46
90.0	79.4	89.9	80.7	90.8	81.6	84.37	84.09	84.83	84.43	0.08	39.9	40.3	40.2	40.2	33.09	33.17	12:47
90.0	79.4	89.8	80.7	90.8	81.7	84.37	84.07	84.84	84.43	0.07	39.9	40.3	40.3	40.2	33.13	33.24	12:48
90.0	79.4	89.8	80.7	90.7	81.6	84.36	84.06	84.81	84.41	0.06	40.0	40.4	40.2	40.2	33.10	33.22	12:49
90.0	79.4	89.9	80.7	90.8	81.7	84.37	84.09	84.82	84.43	0.05	40.0	40.4	40.2	40.2	33.12	33.21	12:50

COMMENTS _____

Tested By C L Rutledge Date 5-7-93 Reviewed By Frank G. Dewey Date 5-7-93

AMPACITY TEST. JOB NUMBER 93-0501. SAMPLE NUMBER 93-0501-09 DATA FILE 8C6GN009.001 05-07-1993

POSITION 1		POSITION 2		POSITION 3		POSITION AVERAGES			AVG		AMBIENT TEMPERATURE				AMPS		
T1mx	T1mn	T2mx	T2mn	T3mx	T3mn	T1avg	T2avg	T3avg	Twave	SLOPE	Tam1	Tam2	Tam3	Taav	It	I'	TIME
[illegible].0	79.4	89.8	80.7	90.8	81.7	84.37	84.08	84.82	84.42	0.05	40.0	40.3	40.2	40.2	33.19	33.29	12:51
[illegible].0	79.4	89.9	80.7	90.8	81.7	84.38	84.09	84.82	84.43	0.04	40.0	40.3	40.2	40.1	33.16	33.25	12:52
90.0	79.4	89.8	80.7	90.8	81.7	84.37	84.08	84.84	84.43	0.03	39.9	40.3	40.2	40.1	33.17	33.27	12:53
90.0	79.4	89.9	80.7	90.8	81.6	84.39	84.08	84.81	84.43	0.03	39.9	40.4	40.2	40.2	33.17	33.27	12:54
90.0	79.4	89.8	80.7	90.8	81.7	84.38	84.08	84.84	84.43	0.02	39.9	40.3	40.2	40.1	33.16	33.25	12:55
90.0	79.4	89.9	80.7	90.8	81.7	84.38	84.09	84.83	84.43	0.02	39.9	40.3	40.1	40.1	33.17	33.25	12:56
90.0	79.4	89.8	80.7	90.7	81.6	84.39	84.08	84.82	84.43	0.01	39.9	40.4	40.2	40.2	33.21	33.31	12:57
90.0	79.4	89.8	80.6	90.8	81.7	84.37	84.07	84.83	84.42	0.01	40.0	40.3	40.2	40.2	33.14	33.24	12:58
90.0	79.4	89.9	80.7	90.8	81.6	84.38	84.09	84.84	84.44	0.00	39.9	40.3	40.2	40.1	33.19	33.27	12:59
90.0	79.4	89.8	80.7	90.8	81.6	84.38	84.08	84.83	84.43	-0.00	39.9	40.3	40.1	40.1	33.13	33.20	13:00
90.0	79.4	89.9	80.7	90.8	81.7	84.38	84.10	84.84	84.44	-0.00	39.9	40.2	40.1	40.1	33.18	33.23	13:01
90.0	79.4	89.9	80.7	90.8	81.6	84.39	84.10	84.83	84.44	-0.01	39.9	40.3	40.2	40.1	33.20	33.28	13:02
90.0	79.4	89.8	80.7	90.8	81.7	84.39	84.07	84.83	84.43	-0.01	39.9	40.3	40.1	40.1	33.18	33.25	13:03
90.1	79.4	89.8	80.7	90.8	81.7	84.40	84.09	84.85	84.45	-0.01	40.0	40.3	40.3	40.2	33.16	33.26	13:04
90.0	79.4	89.9	80.7	90.8	81.7	84.41	84.10	84.84	84.45	-0.01	39.9	40.3	40.1	40.1	33.19	33.27	13:05
90.1	79.4	89.8	80.7	90.8	81.7	84.41	84.08	84.83	84.44	-0.01	39.9	40.3	40.1	40.1	33.14	33.21	13:06
90.1	79.4	89.8	80.7	90.8	81.7	84.39	84.09	84.85	84.44	-0.01	39.9	40.3	40.2	40.1	33.04	33.13	13:07
90.0	79.4	89.9	80.7	90.8	81.6	84.38	84.08	84.81	84.43	-0.01	39.9	40.3	40.2	40.1	33.14	33.22	13:08
90.0	79.4	89.9	80.7	90.8	81.7	84.37	84.09	84.83	84.43	-0.01	39.9	40.4	40.2	40.2	33.05	33.14	13:09
90.0	79.4	89.9	80.7	90.8	81.7	84.40	84.11	84.85	84.45	-0.01	39.9	40.4	40.1	40.1	33.16	33.23	13:10
90.0	79.4	89.9	80.7	90.8	81.7	84.41	84.12	84.85	84.46	-0.01	39.9	40.3	40.1	40.1	33.18	33.25	13:11
90.0	79.4	89.9	80.7	90.8	81.7	84.40	84.10	84.84	84.45	-0.01	39.9	40.3	40.2	40.1	33.10	33.16	13:12
90.0	79.4	89.9	80.7	90.8	81.6	84.40	84.09	84.83	84.44	-0.01	39.9	40.3	40.2	40.1	33.16	33.24	13:13
90.0	79.4	89.9	80.7	90.8	81.6	84.39	84.08	84.83	84.43	-0.01	39.9	40.4	40.1	40.1	33.15	33.23	13:14
90.0	79.4	89.9	80.7	90.8	81.6	84.36	84.08	84.82	84.42	-0.01	39.9	40.3	40.1	40.1	33.13	33.20	13:15
90.0	79.4	89.9	80.7	90.8	81.7	84.38	84.09	84.83	84.43	-0.01	39.9	40.3	40.1	40.1	33.10	33.18	13:16
90.0	79.4	89.9	80.7	90.8	81.7	84.42	84.11	84.83	84.45	-0.00	39.9	40.3	40.1	40.1	33.15	33.22	13:17
90.0	79.4	89.8	80.6	90.8	81.7	84.37	84.07	84.83	84.42	-0.00	40.0	40.4	40.2	40.2	33.00	33.11	13:18
90.0	79.4	89.8	80.7	90.8	81.6	84.38	84.08	84.82	84.43	-0.00	40.0	40.4	40.2	40.2	33.08	33.18	13:19
90.0	79.4	89.8	80.6	90.8	81.6	84.38	84.07	84.82	84.42	-0.00	39.9	40.4	40.1	40.1	33.02	33.11	13:20
90.0	79.4	89.9	80.7	90.8	81.7	84.38	84.10	84.84	84.44	-0.00	39.8	40.4	40.1	40.1	33.16	33.23	13:21
90.0	79.4	89.8	80.6	90.8	81.6	84.37	84.06	84.82	84.42	-0.00	39.9	40.4	40.2	40.2	33.10	33.20	13:22
90.0	79.4	89.8	80.7	90.8	81.6	84.38	84.07	84.81	84.42	-0.00	39.9	40.3	40.2	40.2	33.13	33.23	13:23
90.0	79.4	89.8	80.6	90.8	81.7	84.38	84.07	84.83	84.43	-0.01	39.8	40.3	40.2	40.1	33.20	33.28	13:24
[illegible].0	79.4	89.8	80.7	90.8	81.7	84.37	84.08	84.83	84.43	-0.01	39.8	40.3	40.0	40.1	33.18	33.24	13:25
[illegible].0	79.4	89.8	80.7	90.8	81.7	84.39	84.09	84.84	84.44	-0.00	39.9	40.4	40.2	40.2	33.13	33.23	13:26
90.0	79.4	89.8	80.6	90.8	81.7	84.39	84.07	84.82	84.43	-0.00	39.9	40.3	40.2	40.1	33.08	33.18	13:27
90.1	79.4	89.8	80.6	90.8	81.7	84.39	84.07	84.82	84.42	-0.00	39.9	40.4	40.2	40.2	33.09	33.20	13:28
90.0	79.4	89.9	80.7	90.8	81.6	84.38	84.09	84.82	84.43	-0.00	39.9	40.3	40.1	40.1	33.06	33.13	13:29
90.0	79.4	89.9	80.7	90.8	81.6	84.38	84.08	84.81	84.42	-0.00	39.9	40.3	40.2	40.1	33.11	33.19	13:30
90.0	79.4	89.8	80.6	90.8	81.7	84.37	84.07	84.82	84.42	-0.00	39.9	40.3	40.2	40.1	33.11	33.20	13:31
90.0	79.4	89.8	80.7	90.8	81.7	84.38	84.08	84.83	84.43	-0.00	39.9	40.3	40.1	40.1	33.12	33.21	13:32
90.0	79.4	89.9	80.7	90.8	81.6	84.39	84.10	84.83	84.44	0.00	40.0	40.4	40.1	40.1	33.05	33.12	13:33
90.0	79.4	89.9	80.7	90.8	81.7	84.37	84.07	84.82	84.42	0.00	39.9	40.4	40.2	40.2	33.16	33.26	13:34
90.0	79.4	89.8	80.7	90.7	81.6	84.37	84.07	84.81	84.42	-0.00	39.9	40.4	40.0	40.1	33.22	33.31	13:35
90.0	79.4	89.9	80.7	90.8	81.6	84.39	84.09	84.81	84.43	-0.00	39.9	40.4	40.0	40.1	33.14	33.20	13:36
90.0	79.4	89.8	80.6	90.8	81.6	84.37	84.06	84.81	84.41	-0.00	39.9	40.4	40.2	40.2	33.26	33.37	13:37
90.0	79.4	89.8	80.7	90.7	81.6	84.39	84.07	84.79	84.42	-0.00	39.9	40.4	40.2	40.2	33.14	33.24	13:38
90.0	79.4	89.9	80.7	90.8	81.6	84.38	84.07	84.83	84.43	-0.00	40.0	40.4	40.2	40.2	33.16	33.26	13:39
90.0	79.4	89.9	80.7	90.8	81.6	84.38	84.08	84.82	84.43	-0.00	39.9	40.4	40.1	40.1	33.14	33.22	13:40
90.0	79.4	89.9	80.7	90.8	81.6	84.39	84.09	84.83	84.44	-0.00	39.9	40.4	40.2	40.2	33.16	33.26	13:41
90.0	79.4	89.8	80.7	90.8	81.6	84.38	84.07	84.82	84.43	-0.00	40.0	40.4	40.2	40.2	33.20	33.31	13:42
90.0	79.4	89.9	80.7	90.8	81.6	84.39	84.09	84.83	84.44	-0.00	39.9	40.4	40.1	40.2	33.14	33.22	13:43
90.0	79.4	89.8	80.7	90.8	81.6	84.39	84.08	84.82	84.43	-0.00	39.9	40.3	40.1	40.1	33.10	33.18	13:44
90.0	79.4	89.9	80.7	90.8	81.7	84.37	84.08	84.82	84.42	-0.00	40.0	40.4	40.2	40.2	33.10	33.20	13:45
90.0	79.4	89.9	80.7	90.8	81.7	84.37	84.09	84.85	84.44	-0.01	40.0	40.4	40.2	40.2	33.08	33.18	13:46
90.0	79.4	89.9	80.7	90.8	81.7	84.38	84.08	84.83	84.43	-0.01	40.0	40.4	40.3	40.2	33.11	33.22	13:47
90.0	79.4	89.9	80.7	90.8	81.7	84.38	84.09	84.82	84.43	-0.01	39.9	40.4	40.2	40.2	33.18	33.27	13:48
90.0	79.4	89.9	80.7	90.8	81.7	84.39	84.10	84.85	84.44	-0.01	40.0	40.3	40.2	40.2	33.25	33.34	13:49
90.0	79.4	89.9	80.7	90.8	81.7	84.39	84.09	84.84	84.44	-0.01	39.9	40.4	40.3	40.2	33.24	33.35	13:50

COMMENTS _____

Tested By C L Rutledge Date 5-7-93 Reviewed By Frank A. Demez Date 5-7-93

AMPACITY TEST. JOB NUMBER 93-0501. SAMPLE NUMBER 93-0501-09 DATA FILE 8C66N009.GR2 05-10-1993

POSITION 1		POSITION 2		POSITION 3		POSITION AVERAGES			AVG		AMBIENT TEMPERATURE				AMPS		
T1max	T1min	T2max	T2min	T3max	T3min	T1avg	T2avg	T3avg	Iwave	SLOPE	Tam1	Tam2	Tam3	Taav	It	I'	TIME
89.9	79.3	89.8	80.5	90.7	81.5	84.25	84.00	84.71	84.32	-0.00	39.6	40.0	39.9	39.8	32.99	32.99	11:53
89.9	79.2	89.8	80.5	90.7	81.5	84.25	84.00	84.71	84.32	-0.01	39.6	40.0	40.0	39.9	33.15	33.16	11:54
89.9	79.2	89.8	80.5	90.7	81.5	84.25	83.99	84.70	84.31	-0.02	39.6	39.9	39.9	39.8	33.11	33.10	11:55
89.8	79.2	89.8	80.5	90.7	81.6	84.23	83.99	84.72	84.31	-0.03	39.6	40.0	39.9	39.8	33.13	33.13	11:56
89.8	79.2	89.8	80.5	90.7	81.5	84.23	83.98	84.69	84.30	-0.04	39.6	40.0	40.0	39.9	33.16	33.17	11:57
89.9	79.3	89.8	80.5	90.7	81.5	84.25	83.99	84.69	84.31	-0.05	39.6	39.9	39.9	39.8	33.12	33.12	11:58
89.9	79.2	89.8	80.5	90.7	81.5	84.24	83.97	84.68	84.30	-0.05	39.6	40.0	40.0	39.9	33.14	33.17	11:59
89.8	79.2	89.8	80.5	90.7	81.5	84.23	83.98	84.68	84.30	-0.06	39.7	40.0	40.0	39.9	33.16	33.19	12:00
89.9	79.2	89.8	80.5	90.7	81.5	84.25	83.97	84.67	84.29	-0.07	39.7	40.0	40.0	39.9	33.22	33.26	12:01
89.9	79.2	89.8	80.5	90.7	81.5	84.24	83.97	84.69	84.30	-0.08	39.7	40.0	40.0	39.9	33.21	33.24	12:02
89.8	79.2	89.8	80.5	90.7	81.5	84.23	83.97	84.67	84.29	-0.09	39.7	40.0	40.0	39.9	33.09	33.13	12:03
89.8	79.2	89.8	80.5	90.7	81.5	84.22	83.97	84.68	84.29	-0.10	39.7	40.0	39.9	39.9	33.03	33.05	12:04
89.8	79.2	89.8	80.5	90.6	81.5	84.21	83.96	84.67	84.28	-0.10	39.6	40.0	39.9	39.8	33.08	33.10	12:05
89.8	79.2	89.8	80.5	90.7	81.5	84.20	83.95	84.67	84.27	-0.11	39.6	40.0	40.0	39.9	32.99	33.02	12:06
89.8	79.2	89.8	80.5	90.6	81.5	84.21	83.96	84.67	84.28	-0.12	39.7	40.0	40.0	39.9	33.06	33.10	12:07
89.8	79.2	89.7	80.5	90.6	81.5	84.18	83.94	84.65	84.26	-0.12	39.6	40.0	40.0	39.9	33.10	33.13	12:08
89.8	79.2	89.7	80.5	90.6	81.5	84.17	83.93	84.65	84.25	-0.13	39.7	40.0	40.1	39.9	33.10	33.15	12:09
89.8	79.2	89.7	80.4	90.6	81.5	84.20	83.93	84.64	84.26	-0.14	39.7	40.0	40.0	39.9	33.11	33.17	12:10
89.8	79.2	89.7	80.4	90.6	81.5	84.19	83.92	84.61	84.24	-0.15	39.7	40.1	40.1	40.0	33.11	33.19	12:11
89.8	79.2	89.7	80.5	90.6	81.5	84.16	83.92	84.65	84.24	-0.15	39.7	40.1	40.0	40.0	33.08	33.15	12:12
89.8	79.2	89.7	80.5	90.6	81.5	84.17	83.92	84.63	84.24	-0.16	39.8	40.0	40.0	39.9	33.10	33.16	12:13
89.8	79.2	89.7	80.4	90.6	81.5	84.17	83.92	84.63	84.24	-0.17	39.7	40.1	40.0	39.9	33.04	33.10	12:14
89.8	79.2	89.7	80.4	90.6	81.5	84.18	83.92	84.62	84.24	-0.17	39.8	40.1	40.1	40.0	33.03	33.11	12:15
89.8	79.2	89.7	80.5	90.6	81.4	84.18	83.92	84.63	84.24	-0.17	39.8	40.1	40.1	40.0	33.08	33.16	12:16
89.8	79.2	89.7	80.4	90.6	81.5	84.18	83.91	84.61	84.23	-0.18	39.8	40.0	40.0	40.0	32.93	33.00	12:17
89.8	79.2	89.7	80.4	90.6	81.4	84.17	83.91	84.60	84.23	-0.18	39.8	40.1	40.0	40.0	33.05	33.13	12:18
89.8	79.2	89.7	80.4	90.6	81.5	84.16	83.91	84.61	84.23	-0.18	39.7	40.2	40.1	40.0	33.09	33.18	12:19
89.8	79.2	89.7	80.4	90.6	81.4	84.16	83.91	84.62	84.23	-0.18	39.7	40.1	40.2	40.0	33.15	33.24	12:20
89.8	79.2	89.7	80.4	90.6	81.4	84.15	83.90	84.61	84.22	-0.19	39.7	40.1	40.0	40.0	33.19	33.27	12:21
89.8	79.2	89.7	80.4	90.6	81.4	84.16	83.90	84.60	84.22	-0.19	39.7	40.1	40.0	40.0	33.42	33.50	12:22
89.8	79.2	89.7	80.4	90.6	81.5	84.17	83.91	84.62	84.23	-0.19	39.8	40.1	40.0	40.0	33.40	33.47	12:23
89.8	79.2	89.7	80.4	90.6	81.5	84.17	83.92	84.63	84.24	-0.19	39.7	40.2	40.1	40.0	33.31	33.39	12:24
89.8	79.2	89.7	80.5	90.6	81.5	84.19	83.93	84.64	84.25	-0.18	39.7	40.2	40.1	40.0	33.39	33.47	12:25
89.8	79.2	89.7	80.5	90.6	81.5	84.20	83.94	84.65	84.26	-0.18	39.8	40.2	40.1	40.0	33.30	33.39	12:26
89.8	79.2	89.7	80.5	90.6	81.5	84.20	83.93	84.63	84.25	-0.18	39.8	40.2	40.1	40.0	33.31	33.40	12:27
89.8	79.2	89.7	80.5	90.6	81.5	84.21	83.93	84.66	84.27	-0.17	39.8	40.2	40.1	40.1	33.35	33.44	12:28
89.8	79.2	89.7	80.5	90.6	81.5	84.20	83.94	84.66	84.26	-0.17	39.8	40.2	40.1	40.0	33.39	33.48	12:29
89.8	79.2	89.7	80.5	90.6	81.5	84.21	83.94	84.64	84.27	-0.16	39.7	40.2	40.1	40.0	33.40	33.49	12:30
89.8	79.2	89.7	80.5	90.6	81.5	84.20	83.95	84.66	84.27	-0.16	39.8	40.3	40.2	40.1	33.40	33.50	12:31
89.8	79.2	89.8	80.5	90.6	81.5	84.21	83.96	84.68	84.28	-0.15	39.8	40.2	40.2	40.1	33.42	33.52	12:32
89.8	79.2	89.8	80.5	90.6	81.5	84.19	83.95	84.68	84.28	-0.14	39.9	40.2	40.2	40.1	33.30	33.40	12:33
89.8	79.2	89.8	80.5	90.7	81.5	84.21	83.97	84.68	84.29	-0.13	39.9	40.3	40.1	40.1	33.37	33.47	12:34
89.8	79.2	89.8	80.5	90.6	81.5	84.21	83.96	84.67	84.28	-0.12	39.8	40.3	40.2	40.1	33.36	33.46	12:35
89.9	79.2	89.8	80.5	90.7	81.5	84.25	83.98	84.68	84.30	-0.11	39.8	40.2	40.1	40.0	33.39	33.48	12:36
89.8	79.2	89.8	80.5	90.7	81.5	84.24	83.99	84.69	84.31	-0.11	39.9	40.3	40.1	40.1	33.36	33.46	12:37
89.9	79.2	89.8	80.5	90.7	81.5	84.25	83.99	84.69	84.31	-0.10	39.8	40.3	40.2	40.1	33.40	33.49	12:38
89.9	79.2	89.8	80.5	90.7	81.5	84.24	83.99	84.71	84.31	-0.08	39.8	40.3	40.1	40.1	33.32	33.40	12:39
89.9	79.2	89.8	80.5	90.7	81.6	84.24	83.99	84.71	84.31	-0.07	39.8	40.3	40.2	40.1	33.37	33.46	12:40
89.9	79.2	89.8	80.5	90.7	81.6	84.26	84.00	84.72	84.33	-0.06	39.8	40.2	40.2	40.1	33.32	33.41	12:41
89.9	79.2	89.8	80.5	90.7	81.5	84.23	83.98	84.70	84.31	-0.05	39.8	40.2	40.1	40.0	33.42	33.50	12:42
89.9	79.3	89.8	80.5	90.7	81.6	84.26	84.01	84.72	84.33	-0.04	39.8	40.3	40.2	40.1	33.45	33.53	12:43
89.9	79.3	89.8	80.6	90.7	81.6	84.29	84.02	84.73	84.35	-0.03	39.9	40.3	40.2	40.1	33.42	33.51	12:44
89.9	79.3	89.8	80.5	90.7	81.6	84.28	84.01	84.73	84.34	-0.02	40.0	40.3	40.2	40.2	33.32	33.43	12:45
89.9	79.3	89.8	80.6	90.7	81.6	84.28	84.01	84.73	84.34	-0.01	39.9	40.4	40.2	40.2	33.37	33.48	12:46
89.9	79.3	89.8	80.6	90.7	81.6	84.29	84.02	84.73	84.35	0.00	39.9	40.3	40.2	40.1	33.35	33.45	12:47
89.9	79.3	89.8	80.5	90.7	81.6	84.29	84.01	84.72	84.34	0.01	39.8	40.4	40.3	40.2	33.27	33.38	12:48
89.9	79.3	89.8	80.5	90.7	81.6	84.28	84.00	84.73	84.33	0.02	39.9	40.4	40.2	40.2	33.16	33.27	12:49
89.9	79.3	89.8	80.5	90.7	81.6	84.28	84.01	84.73	84.34	0.03	39.9	40.4	40.2	40.2	33.06	33.16	12:50
89.9	79.3	89.8	80.5	90.7	81.6	84.28	84.01	84.73	84.34	0.04	39.9	40.5	40.2	40.2	33.14	33.25	12:51
89.9	79.3	89.8	80.5	90.7	81.6	84.29	84.01	84.72	84.34	0.05	39.9	40.4	40.2	40.2	33.18	33.29	12:52

COMMENTS This test was performed using the 2 10' sections of conduit coupled together and a grand was attached to the conduit.

Tested By C.L. Rutledge Date 5-10-93 Reviewed By Frank A. Denney Date 5-18-93

AMPACITY TEST. JOB NUMBER 93-0501. SAMPLE NUMBER 93-0501-09 DATA FILE 8C6GN009.GR2 05-10-1993

POSITION 1		POSITION 2		POSITION 3		POSITION AVERAGES			AVG		AMBIENT TEMPERATURE				AMPS		
T1mx	T1mn	T2mx	T2mn	T3mx	T3mn	T1avg	T2avg	T3avg	Twave	SLOPE	Tam1	Tam2	Tam3	Taav	It	I'	TIME
89.9	79.3	89.8	80.5	90.7	81.6	84.27	84.01	84.73	84.34	0.06	39.9	40.3	40.2	40.1	33.19	33.29	12:53
89.9	79.3	89.8	80.5	90.7	81.6	84.28	84.01	84.73	84.34	0.07	39.8	40.4	40.2	40.1	33.15	33.25	12:54
89.9	79.3	89.8	80.5	90.7	81.6	84.28	84.00	84.71	84.33	0.08	39.9	40.3	40.3	40.2	33.14	33.27	12:55
89.9	79.3	89.8	80.5	90.7	81.6	84.27	83.99	84.72	84.33	0.08	39.9	40.3	40.2	40.2	33.21	33.32	12:56
89.9	79.3	89.8	80.5	90.7	81.6	84.27	83.99	84.72	84.33	0.09	39.9	40.4	40.2	40.2	33.25	33.36	12:57
89.9	79.3	89.8	80.5	90.7	81.5	84.27	83.99	84.71	84.32	0.09	40.0	40.4	40.3	40.2	33.24	33.38	12:58
89.9	79.3	89.8	80.5	90.7	81.5	84.26	83.99	84.70	84.32	0.10	40.0	40.4	40.3	40.2	33.14	33.26	12:59
89.9	79.3	89.8	80.5	90.7	81.6	84.26	84.01	84.72	84.33	0.10	39.9	40.3	40.2	40.2	33.10	33.21	13:00
89.9	79.3	89.8	80.5	90.7	81.6	84.26	83.99	84.71	84.32	0.11	39.9	40.3	40.3	40.2	33.06	33.18	13:01
89.9	79.3	89.8	80.5	90.7	81.5	84.26	83.99	84.70	84.32	0.11	39.9	40.4	40.4	40.2	33.08	33.22	13:02
89.9	79.3	89.8	80.5	90.7	81.5	84.25	83.99	84.69	84.31	0.11	39.9	40.4	40.3	40.2	33.06	33.20	13:03
89.9	79.3	89.8	80.5	90.7	81.6	84.26	83.99	84.71	84.32	0.12	40.0	40.4	40.4	40.3	33.20	33.36	13:04
89.9	79.3	89.8	80.5	90.7	81.6	84.26	83.99	84.71	84.32	0.12	39.9	40.4	40.3	40.2	33.22	33.35	13:05
89.9	79.3	89.8	80.5	90.7	81.6	84.26	83.98	84.69	84.31	0.12	40.0	40.4	40.3	40.2	33.20	33.34	13:06
89.9	79.3	89.8	80.5	90.7	81.6	84.26	83.99	84.71	84.32	0.12	40.0	40.4	40.3	40.2	33.16	33.30	13:07
89.9	79.3	89.8	80.6	90.7	81.6	84.25	84.00	84.73	84.33	0.12	40.0	40.3	40.3	40.2	33.20	33.34	13:08
89.9	79.3	89.8	80.6	90.7	81.6	84.27	84.00	84.71	84.33	0.12	40.0	40.4	40.3	40.2	33.20	33.34	13:09
89.9	79.3	89.7	80.5	90.7	81.6	84.25	83.97	84.70	84.31	0.12	40.0	40.3	40.3	40.2	33.14	33.28	13:10
89.9	79.3	89.8	80.5	90.7	81.6	84.26	83.99	84.70	84.32	0.12	40.0	40.4	40.3	40.2	33.11	33.25	13:11
89.9	79.3	89.8	80.5	90.7	81.5	84.26	84.00	84.72	84.32	0.11	39.9	40.4	40.2	40.2	33.06	33.18	13:12
89.9	79.3	89.8	80.5	90.7	81.5	84.26	83.97	84.69	84.31	0.11	39.9	40.3	40.3	40.2	33.14	33.27	13:13
89.8	79.3	89.8	80.5	90.7	81.5	84.25	83.98	84.69	84.30	0.10	40.0	40.3	40.3	40.2	33.14	33.26	13:14
89.9	79.3	89.8	80.5	90.7	81.5	84.25	83.97	84.70	84.31	0.10	40.0	40.3	40.3	40.2	33.14	33.27	13:15
89.8	79.3	89.8	80.5	90.7	81.6	84.24	83.98	84.71	84.31	0.09	39.9	40.3	40.2	40.1	33.10	33.21	13:16
89.9	79.3	89.8	80.5	90.7	81.6	84.25	83.98	84.71	84.31	0.09	39.9	40.3	40.3	40.2	33.12	33.24	13:17
89.8	79.3	89.8	80.5	90.6	81.5	84.24	83.97	84.69	84.30	0.08	39.9	40.3	40.3	40.2	33.15	33.27	13:18
89.8	79.3	89.8	80.5	90.7	81.5	84.26	83.97	84.68	84.30	0.07	39.9	40.3	40.3	40.2	33.16	33.29	13:19
89.9	79.3	89.8	80.5	90.7	81.5	84.24	83.97	84.70	84.31	0.06	39.9	40.3	40.3	40.2	33.19	33.32	13:20
89.9	79.3	89.7	80.5	90.6	81.5	84.26	83.96	84.68	84.30	0.05	39.9	40.3	40.3	40.2	33.13	33.26	13:21
89.9	79.3	89.7	80.5	90.6	81.5	84.26	83.97	84.68	84.30	0.05	40.0	40.3	40.3	40.2	33.13	33.27	13:22
89.9	79.3	89.7	80.5	90.7	81.5	84.24	83.97	84.69	84.30	0.04	40.0	40.3	40.2	40.2	33.03	33.15	13:23
89.9	79.3	89.7	80.5	90.6	81.5	84.24	83.96	84.68	84.29	0.03	40.0	40.4	40.2	40.2	33.14	33.29	13:24
89.9	79.3	89.8	80.5	90.6	81.5	84.25	83.97	84.69	84.30	0.02	39.9	40.3	40.2	40.1	33.11	33.22	13:25
89.9	79.3	89.7	80.5	90.6	81.5	84.26	83.96	84.68	84.30	0.02	40.0	40.3	40.2	40.2	33.15	33.28	13:26
89.9	79.3	89.7	80.5	90.6	81.5	84.25	83.97	84.69	84.30	0.01	40.0	40.4	40.3	40.2	33.22	33.36	13:27
89.9	79.3	89.8	80.5	90.7	81.6	84.25	83.98	84.70	84.31	0.00	39.9	40.3	40.2	40.2	33.22	33.34	13:28
89.8	79.3	89.8	80.5	90.7	81.5	84.25	83.96	84.70	84.31	-0.00	40.0	40.4	40.3	40.2	33.14	33.26	13:29
89.9	79.3	89.7	80.5	90.6	81.5	84.26	83.96	84.67	84.30	-0.01	40.0	40.4	40.2	40.2	33.13	33.26	13:30
89.9	79.3	89.7	80.5	90.6	81.5	84.26	83.97	84.66	84.30	-0.01	40.0	40.3	40.3	40.2	33.16	33.29	13:31
89.8	79.3	89.7	80.5	90.6	81.5	84.24	83.96	84.69	84.30	-0.02	39.9	40.3	40.3	40.2	33.10	33.22	13:32
89.8	79.3	89.8	80.5	90.6	81.6	84.25	83.97	84.69	84.30	-0.02	40.0	40.3	40.2	40.2	33.09	33.21	13:33
89.8	79.2	89.7	80.5	90.6	81.5	84.22	83.95	84.67	84.28	-0.03	40.0	40.3	40.3	40.2	33.06	33.20	13:34
89.9	79.3	89.7	80.5	90.6	81.6	84.26	83.97	84.69	84.31	-0.03	40.0	40.3	40.3	40.2	33.15	33.29	13:35
89.9	79.3	89.7	80.5	90.7	81.5	84.25	83.96	84.69	84.30	-0.04	40.0	40.3	40.3	40.2	33.15	33.29	13:36
89.8	79.3	89.8	80.5	90.7	81.6	84.24	83.97	84.69	84.30	-0.04	40.0	40.3	40.2	40.2	33.19	33.32	13:37
89.8	79.2	89.7	80.5	90.7	81.6	84.23	83.97	84.70	84.30	-0.04	39.9	40.3	40.2	40.1	33.24	33.36	13:38
89.9	79.3	89.8	80.5	90.7	81.6	84.25	83.98	84.70	84.31	-0.04	39.9	40.3	40.3	40.2	33.28	33.41	13:39
89.9	79.3	89.7	80.5	90.6	81.6	84.25	83.97	84.70	84.31	-0.04	39.9	40.3	40.2	40.2	33.30	33.43	13:40
89.9	79.3	89.7	80.5	90.7	81.5	84.28	83.97	84.68	84.31	-0.04	40.0	40.3	40.2	40.2	33.24	33.36	13:41
89.8	79.3	89.8	80.5	90.7	81.6	84.26	83.99	84.71	84.32	-0.04	39.9	40.4	40.3	40.2	33.24	33.37	13:42
89.9	79.3	89.7	80.5	90.6	81.5	84.27	83.97	84.69	84.31	-0.04	40.0	40.4	40.3	40.2	33.18	33.34	13:43
89.8	79.3	89.8	80.5	90.7	81.6	84.25	83.98	84.71	84.31	-0.04	40.0	40.4	40.2	40.2	33.20	33.34	13:44
89.9	79.3	89.8	80.5	90.7	81.6	84.27	83.98	84.70	84.32	-0.04	39.9	40.3	40.3	40.2	33.08	33.22	13:45
89.9	79.3	89.8	80.5	90.7	81.6	84.28	83.99	84.71	84.33	-0.03	39.9	40.3	40.3	40.2	33.19	33.31	13:46
89.9	79.3	89.8	80.5	90.7	81.5	84.26	83.98	84.71	84.32	-0.03	39.9	40.3	40.3	40.2	33.16	33.28	13:47
89.9	79.3	89.8	80.5	90.7	81.6	84.27	83.99	84.71	84.32	-0.03	39.9	40.4	40.3	40.2	33.22	33.35	13:48
89.9	79.3	89.8	80.5	90.7	81.6	84.27	83.99	84.71	84.33	-0.02	40.0	40.3	40.2	40.2	33.22	33.36	13:49
89.9	79.3	89.8	80.5	90.7	81.6	84.28	83.99	84.72	84.33	-0.02	40.0	40.3	40.3	40.2	33.24	33.37	13:50
89.8	79.3	89.8	80.5	90.7	81.6	84.27	83.99	84.72	84.33	-0.01	40.1	40.4	40.3	40.2	33.24	33.38	13:51
89.9	79.3	89.8	80.5	90.7	81.6	84.28	84.00	84.72	84.33	-0.01	40.0	40.3	40.2	40.2	33.24	33.35	13:52

COMMENTS

Tested By C.L. Rutledge Date 5-10-93 Reviewed by Frank A. Denney Date 5-10-93

AMPACITY TEST. JOB NUMBER 93-0501. SAMPLE NUMBER 93-0501-09 DATA FILE BC6GND09.GR2 05-10-1993

POSITION 1		POSITION 2		POSITION 3		POSITION AVERAGES			AVG		AMBIENT TEMPERATURE				AMPS		
T1mx	T1mn	T2mx	T2mn	T3mx	T3mn	T1avg	T2avg	T3avg	Twave	SLOPE	Tam1	Tam2	Tam3	Taav	It	I'	TIME
89.9	79.3	89.7	80.5	90.7	81.6	84.28	83.99	84.71	84.33	-0.01	40.0	40.3	40.3	40.2	33.18	33.33	13:53
89.9	79.3	89.8	80.5	90.7	81.6	84.29	84.00	84.72	84.34	-0.00	39.9	40.4	40.2	40.2	33.22	33.35	13:54
89.9	79.3	89.8	80.5	90.7	81.6	84.26	83.99	84.72	84.33	0.00	40.0	40.4	40.3	40.2	33.19	33.34	13:55
89.9	79.3	89.8	80.6	90.7	81.6	84.29	84.01	84.72	84.34	0.01	40.0	40.4	40.3	40.2	33.03	33.17	13:56
89.8	79.3	89.8	80.5	90.7	81.6	84.26	83.99	84.71	84.32	0.01	40.0	40.4	40.3	40.2	33.16	33.31	13:57
89.9	79.3	89.8	80.5	90.7	81.6	84.28	83.99	84.71	84.33	0.01	40.0	40.4	40.3	40.2	33.02	33.17	13:58
89.9	79.3	89.8	80.5	90.7	81.6	84.25	83.99	84.73	84.33	0.01	40.0	40.3	40.3	40.2	33.14	33.28	13:59
89.9	79.3	89.8	80.5	90.7	81.6	84.27	84.00	84.73	84.33	0.02	40.0	40.3	40.3	40.2	33.20	33.33	14:00
89.9	79.3	89.8	80.6	90.7	81.6	84.28	84.00	84.72	84.34	0.02	40.0	40.3	40.4	40.2	33.21	33.35	14:01
89.9	79.3	89.8	80.6	90.7	81.6	84.28	84.01	84.73	84.34	0.02	40.0	40.3	40.4	40.2	33.14	33.28	14:02
89.9	79.3	89.8	80.5	90.7	81.6	84.27	83.99	84.72	84.33	0.02	40.1	40.3	40.3	40.2	33.04	33.18	14:03
89.9	79.3	89.7	80.5	90.7	81.6	84.26	83.98	84.70	84.31	0.02	40.0	40.3	40.3	40.2	33.12	33.27	14:04
89.9	79.3	89.8	80.5	90.7	81.6	84.27	84.00	84.71	84.33	0.02	40.0	40.5	40.4	40.3	33.00	33.17	14:05
89.9	79.3	89.8	80.5	90.7	81.6	84.27	84.00	84.73	84.33	0.03	40.0	40.5	40.3	40.3	33.17	33.32	14:06
89.9	79.3	89.8	80.6	90.7	81.6	84.28	84.00	84.73	84.34	0.03	40.0	40.5	40.3	40.3	33.16	33.32	14:07
89.8	79.3	89.8	80.5	90.7	81.6	84.26	83.99	84.72	84.33	0.03	40.0	40.5	40.3	40.3	33.11	33.26	14:08
89.9	79.3	89.8	80.5	90.7	81.6	84.26	83.99	84.72	84.33	0.03	40.0	40.5	40.4	40.3	33.15	33.31	14:09
89.9	79.3	89.8	80.5	90.7	81.6	84.27	84.00	84.72	84.33	0.03	40.0	40.5	40.3	40.3	33.16	33.33	14:10
89.9	79.3	89.8	80.5	90.7	81.6	84.27	84.00	84.72	84.33	0.04	40.0	40.4	40.3	40.2	33.20	33.35	14:11
89.9	79.3	89.8	80.5	90.7	81.6	84.29	84.00	84.73	84.34	0.04	40.1	40.5	40.3	40.3	33.11	33.26	14:12
89.9	79.3	89.8	80.5	90.7	81.6	84.28	84.01	84.73	84.34	0.04	40.1	40.5	40.4	40.3	33.14	33.31	14:13
89.9	79.3	89.8	80.6	90.7	81.6	84.26	84.00	84.73	84.33	0.04	40.1	40.4	40.3	40.3	33.05	33.22	14:14
89.9	79.3	89.8	80.5	90.7	81.6	84.25	83.99	84.72	84.32	0.04	40.1	40.5	40.4	40.3	33.09	33.26	14:15
89.9	79.3	89.7	80.5	90.7	81.6	84.27	83.98	84.70	84.32	0.04	40.1	40.5	40.4	40.3	33.11	33.30	14:16
89.9	79.3	89.8	80.5	90.7	81.6	84.26	83.98	84.72	84.32	0.04	40.0	40.5	40.4	40.3	33.08	33.25	14:17
89.9	79.3	89.8	80.5	90.7	81.6	84.26	83.99	84.71	84.32	0.04	40.1	40.5	40.3	40.3	33.13	33.31	14:18
89.9	79.3	89.8	80.6	90.7	81.6	84.27	84.00	84.72	84.33	0.04	40.1	40.5	40.3	40.3	33.17	33.33	14:19
89.9	79.3	89.8	80.5	90.7	81.6	84.26	83.99	84.73	84.33	0.04	40.1	40.5	40.4	40.3	33.17	33.34	14:20
89.9	79.3	89.8	80.5	90.7	81.6	84.28	84.00	84.71	84.33	0.04	40.1	40.5	40.3	40.3	33.16	33.33	14:21
89.9	79.3	89.7	80.6	90.7	81.6	84.29	84.00	84.73	84.34	0.04	40.1	40.4	40.3	40.3	33.14	33.31	14:22
89.9	79.3	89.8	80.6	90.7	81.6	84.28	84.01	84.73	84.34	0.04	40.1	40.5	40.3	40.3	33.09	33.26	14:23
[illegible]	79.3	89.8	80.6	90.7	81.6	84.26	84.00	84.73	84.33	0.04	40.1	40.4	40.4	40.3	33.16	33.32	14:24
[illegible]	79.3	89.8	80.5	90.7	81.6	84.29	84.00	84.72	84.34	0.04	40.1	40.5	40.3	40.3	33.22	33.39	14:25
89.9	79.3	89.8	80.5	90.7	81.6	84.26	84.00	84.72	84.33	0.03	40.2	40.5	40.4	40.3	33.22	33.41	14:26
89.9	79.3	89.8	80.6	90.7	81.6	84.27	84.00	84.73	84.33	0.03	40.1	40.5	40.4	40.3	33.16	33.35	14:27
89.9	79.3	89.8	80.6	90.7	81.6	84.29	84.02	84.75	84.35	0.04	40.1	40.5	40.3	40.3	33.10	33.25	14:28
89.9	79.3	89.8	80.6	90.7	81.6	84.30	84.01	84.72	84.34	0.04	40.0	40.4	40.4	40.3	33.04	33.20	14:29
89.9	79.3	89.8	80.6	90.7	81.6	84.27	84.00	84.75	84.34	0.04	40.1	40.5	40.4	40.3	33.01	33.18	14:30
89.9	79.3	89.8	80.6	90.7	81.6	84.28	84.00	84.73	84.34	0.04	40.0	40.5	40.5	40.3	33.07	33.25	14:31
89.9	79.3	89.8	80.6	90.7	81.6	84.28	84.01	84.73	84.34	0.03	40.1	40.5	40.4	40.3	33.16	33.33	14:32
89.9	79.3	89.8	80.5	90.7	81.6	84.27	84.00	84.72	84.33	0.03	40.1	40.5	40.4	40.3	33.16	33.33	14:33
89.9	79.3	89.8	80.6	90.7	81.6	84.30	84.01	84.73	84.35	0.03	40.1	40.5	40.4	40.3	33.11	33.28	14:34
89.9	79.3	89.8	80.6	90.7	81.6	84.30	84.02	84.74	84.35	0.03	40.1	40.4	40.4	40.3	33.20	33.37	14:35
89.9	79.3	89.8	80.6	90.7	81.6	84.30	84.01	84.73	84.35	0.03	40.0	40.5	40.4	40.3	33.16	33.33	14:36
89.9	79.3	89.8	80.6	90.7	81.6	84.30	84.02	84.75	84.36	0.03	40.0	40.4	40.4	40.3	33.12	33.27	14:37
89.9	79.3	89.8	80.6	90.7	81.6	84.29	84.03	84.76	84.36	0.03	40.0	40.4	40.3	40.2	33.24	33.38	14:38
89.9	79.3	89.8	80.6	90.7	81.6	84.31	84.03	84.75	84.36	0.03	40.0	40.5	40.4	40.3	33.12	33.29	14:39
89.9	79.3	89.8	80.6	90.7	81.6	84.29	84.02	84.75	84.35	0.03	40.0	40.5	40.4	40.3	33.20	33.37	14:40
89.9	79.3	89.8	80.6	90.7	81.6	84.29	84.02	84.76	84.36	0.03	40.1	40.4	40.3	40.3	33.21	33.37	14:41
89.9	79.3	89.8	80.6	90.7	81.6	84.28	84.02	84.76	84.36	0.03	40.1	40.4	40.4	40.3	33.13	33.30	14:42
89.9	79.3	89.8	80.6	90.7	81.6	84.31	84.03	84.76	84.36	0.03	40.1	40.4	40.4	40.3	33.13	33.28	14:43
89.9	79.3	89.8	80.6	90.7	81.6	84.30	84.02	84.75	84.35	0.03	40.1	40.4	40.4	40.3	33.18	33.35	14:44
89.9	79.3	89.8	80.6	90.7	81.6	84.30	84.03	84.75	84.36	0.03	40.1	40.4	40.4	40.3	33.16	33.32	14:45
89.9	79.3	89.8	80.6	90.7	81.6	84.30	84.04	84.77	84.37	0.03	40.1	40.5	40.4	40.4	33.07	33.24	14:46
89.9	79.3	89.8	80.6	90.7	81.6	84.31	84.04	84.76	84.37	0.03	40.1	40.5	40.4	40.3	33.06	33.22	14:47
89.8	79.3	89.8	80.6	90.7	81.6	84.27	84.02	84.76	84.35	0.03	40.1	40.5	40.4	40.3	33.02	33.18	14:48
89.9	79.3	89.8	80.6	90.7	81.6	84.31	84.02	84.74	84.35	0.03	40.1	40.5	40.3	40.3	33.02	33.19	14:49
89.9	79.3	89.8	80.6	90.7	81.6	84.30	84.02	84.74	84.35	0.04	40.0	40.5	40.4	40.3	32.99	33.15	14:50
89.9	79.3	89.7	80.5	90.7	81.6	84.27	83.99	84.72	84.33	0.03	40.0	40.5	40.4	40.3	33.07	33.24	14:51
89.9	79.3	89.8	80.6	90.7	81.6	84.30	84.01	84.73	84.35	0.03	40.1	40.5	40.5	40.3	33.06	33.24	14:52

COMMENTS _____

Tested By C.L. Rutledge Date 5-10-93 Reviewed By Frank A. Dewey Date 5-10-93

ATTACHMENT H

DATA FROM 3 PHASE TESTS

AMPACITY TEST. JOB NUMBER 93-0501. SAMPLE NUMBER 93-0501-01 DATA FILE 3p6gno01.001 06-04-1993

POSITION 1		POSITION 2		POSITION 3		_POSITION AVERAGES_			AVG		AMBIENT TEMPERATURE				AMPERES				
T1mx	T1mn	T2mx	T2mn	T3mx	T3mn	T1avg	T2avg	T3avg	Twave	SLOPE	Tam1	Tam2	Tam3	Taav	Ib	Iw	Ir	I'	TIME
[illegible]	76.5	90.2	76.6	90.8	81.7	81.91	83.87	85.27	83.68	-0.05	39.6	40.1	40.1	39.9	34.11	34.10	34.27	34.06	17:03
87.8	76.5	90.2	76.7	90.9	81.4	81.92	83.86	85.23	83.67	-0.06	39.6	40.1	40.1	40.0	34.09	34.07	34.23	34.05	17:04
87.7	76.7	90.2	76.7	90.9	81.4	81.93	83.85	85.25	83.68	-0.06	39.5	40.1	40.1	39.9	34.17	34.14	34.31	34.12	17:05
87.7	76.6	90.2	76.6	90.9	81.5	81.93	83.83	85.26	83.67	-0.06	39.6	40.0	40.1	39.9	34.16	34.15	34.31	34.12	17:06
87.8	76.5	90.3	76.7	90.8	81.7	81.92	83.90	85.30	83.71	-0.06	39.5	40.0	40.1	39.9	34.15	34.13	34.27	34.06	17:07
87.8	76.6	90.3	76.7	90.9	81.5	81.92	83.89	85.27	83.69	-0.05	39.6	40.0	40.1	39.9	34.10	34.10	34.38	34.07	17:08
87.9	76.6	90.3	76.7	90.8	81.7	81.92	83.90	85.29	83.70	-0.05	39.5	39.9	40.1	39.9	34.17	34.17	34.32	34.09	17:09
87.9	76.7	90.3	76.7	90.9	81.5	81.93	83.88	85.26	83.69	-0.05	39.6	39.9	40.1	39.9	34.12	34.12	34.27	34.04	17:10
87.7	76.7	90.2	76.5	90.9	81.6	81.93	83.84	85.29	83.69	-0.04	39.5	39.9	40.1	39.9	34.15	34.15	34.29	34.10	17:11
87.8	76.6	90.3	76.7	90.8	81.6	81.90	83.89	85.30	83.69	-0.04	39.6	40.0	40.1	39.9	34.11	34.11	34.24	34.04	17:12
87.8	76.6	90.3	76.7	90.8	81.6	81.93	83.89	85.27	83.70	-0.04	39.5	40.0	40.1	39.9	34.09	34.10	34.24	34.02	17:13
87.7	76.7	90.2	76.7	90.5	81.5	81.93	83.84	85.25	83.68	-0.04	39.6	40.0	40.1	39.9	34.06	34.08	34.23	34.03	17:14
87.7	76.6	90.2	76.6	90.9	81.6	81.91	83.83	85.29	83.68	-0.04	39.5	40.1	40.1	39.9	34.05	34.04	34.35	34.07	17:15
87.8	76.6	90.2	76.6	90.9	81.7	81.91	83.85	85.31	83.69	-0.04	39.6	40.1	40.1	39.9	34.16	34.14	34.34	34.14	17:16
87.7	76.7	90.2	76.7	90.9	81.5	81.93	83.86	85.26	83.68	-0.04	39.5	40.0	40.1	39.9	34.02	34.02	34.34	34.02	17:17
87.8	76.6	90.3	76.7	90.8	81.7	81.90	83.90	85.32	83.71	-0.03	39.5	40.0	40.1	39.9	34.11	34.11	34.32	34.06	17:18
87.7	76.6	90.2	76.7	90.9	81.4	81.89	83.83	85.27	83.66	-0.03	39.7	40.0	40.1	39.9	34.18	34.16	34.32	34.15	17:19
87.8	76.6	90.3	76.7	90.8	81.7	81.91	83.89	85.32	83.71	-0.03	39.6	40.0	40.1	39.9	34.18	34.18	34.30	34.12	17:20
87.8	76.6	90.3	76.7	90.9	81.7	81.93	83.91	85.32	83.72	-0.03	39.5	39.9	40.1	39.9	34.15	34.14	34.26	34.06	17:21
87.7	76.7	90.2	76.7	90.9	81.5	81.93	83.84	85.28	83.68	-0.03	39.6	40.0	40.2	39.9	34.12	34.12	34.24	34.09	17:22
87.8	76.6	90.3	76.8	90.9	81.6	81.93	83.92	85.30	83.71	-0.03	39.5	40.0	40.1	39.9	34.15	34.13	34.28	34.07	17:23
87.7	76.7	90.2	76.7	91.0	81.5	81.93	83.86	85.30	83.70	-0.02	39.5	40.1	40.1	39.9	34.08	34.05	34.32	34.07	17:24
87.8	76.5	90.3	76.7	90.9	81.7	81.93	83.92	85.34	83.73	-0.02	39.7	40.1	40.1	39.9	34.24	34.20	34.32	34.15	17:25
87.8	76.6	90.3	76.7	90.8	81.7	81.92	83.90	85.33	83.72	-0.02	39.6	40.0	40.1	39.9	34.16	34.12	34.37	34.10	17:26
87.8	76.5	90.3	76.7	90.9	81.7	81.92	83.91	85.31	83.71	-0.01	39.5	40.1	40.1	39.9	34.21	34.20	34.27	34.12	17:27
87.8	76.6	90.3	76.6	90.9	81.6	81.90	83.91	85.33	83.71	-0.01	39.6	40.0	40.1	39.9	34.24	34.21	34.28	34.12	17:28
87.8	76.5	90.3	76.8	90.9	81.7	81.95	83.93	85.35	83.74	-0.00	39.6	40.0	40.1	39.9	34.25	34.23	34.31	34.13	17:29
87.8	76.6	90.3	76.6	90.9	81.7	81.95	83.94	85.35	83.75	-0.00	39.6	40.1	40.1	39.9	34.26	34.21	34.32	34.13	17:30
87.8	76.6	90.4	76.8	90.9	81.5	81.92	83.93	85.35	83.74	0.00	39.5	40.0	40.1	39.9	34.20	34.14	34.31	34.08	17:31
87.8	76.6	90.3	76.7	90.9	81.7	81.96	83.93	85.37	83.75	0.01	39.6	40.0	40.1	39.9	34.22	34.19	34.34	34.13	17:32
87.7	76.6	90.2	76.6	90.9	81.6	81.93	83.85	85.32	83.70	0.01	39.6	40.1	40.1	39.9	34.06	34.09	34.35	34.10	17:33
87.9	76.7	90.5	76.8	90.9	81.5	81.94	83.92	85.31	83.72	0.01	39.7	40.1	40.1	39.9	34.19	34.20	34.31	34.12	17:34
87.8	76.7	90.3	76.8	91.0	81.5	81.97	83.91	85.31	83.73	0.02	39.6	40.0	40.1	39.9	34.16	34.17	34.32	34.12	17:35
[illegible]	76.7	90.3	76.8	91.0	81.5	81.96	83.92	85.32	83.74	0.03	39.7	40.0	40.1	39.9	34.15	34.16	34.32	34.10	17:36
[illegible]	76.7	90.3	76.8	91.0	81.5	81.96	83.93	85.31	83.74	0.03	39.7	40.0	40.1	40.0	34.16	34.16	34.34	34.11	17:37
87.8	76.7	90.3	76.8	91.0	81.6	81.94	83.93	85.35	83.74	0.03	39.6	39.9	40.1	39.9	34.16	34.18	34.31	34.08	17:38
87.9	76.5	90.4	76.8	90.9	81.7	81.97	83.96	85.37	83.77	0.04	39.5	40.0	40.1	39.9	34.14	34.15	34.31	34.07	17:39
87.8	76.7	90.3	76.8	91.0	81.6	81.96	83.94	85.34	83.75	0.04	39.6	40.0	40.1	39.9	34.17	34.18	34.34	34.11	17:40
87.8	76.6	90.3	76.8	90.9	81.7	81.96	83.94	85.35	83.75	0.04	39.6	40.0	40.1	39.9	34.10	34.13	34.20	34.01	17:41
87.8	76.6	90.3	76.7	90.9	81.7	81.92	83.93	85.37	83.74	0.05	39.6	40.0	40.1	39.9	33.99	34.01	34.22	33.95	17:42
87.8	76.6	90.3	76.8	90.9	81.5	81.93	83.93	85.33	83.73	0.05	39.6	40.0	40.2	39.9	33.87	33.88	33.99	33.77	17:43
87.7	76.7	90.3	76.8	91.0	81.5	81.94	83.89	85.33	83.72	0.05	39.6	40.0	40.1	39.9	34.14	34.17	34.14	34.05	17:44
87.8	76.5	90.3	76.7	90.9	81.7	81.95	83.92	85.35	83.74	0.06	39.5	40.0	40.1	39.9	34.16	34.21	34.15	34.05	17:45
87.7	76.6	90.2	76.6	91.0	81.6	81.91	83.86	85.34	83.70	0.06	39.6	40.0	40.2	39.9	34.22	34.24	34.20	34.14	17:46
87.7	76.7	90.2	76.7	91.0	81.5	81.95	83.89	85.34	83.72	0.06	39.7	40.1	40.2	40.0	34.18	34.19	34.15	34.10	17:47
87.8	76.6	90.2	76.6	90.9	81.7	81.94	83.88	85.35	83.72	0.06	39.6	40.1	40.1	39.9	34.09	34.12	34.10	34.02	17:48
87.9	76.5	90.3	76.8	90.9	81.7	81.93	83.94	85.35	83.74	0.06	39.5	40.2	40.1	40.0	34.08	34.09	34.19	34.01	17:49
87.8	76.7	90.2	76.7	91.0	81.6	81.96	83.89	85.33	83.72	0.06	39.6	40.2	40.1	40.0	34.15	34.19	34.13	34.08	17:50
87.7	76.7	90.2	76.7	91.0	81.5	81.93	83.90	85.34	83.72	0.06	39.5	40.2	40.1	40.0	34.06	34.12	34.18	34.04	17:51
87.8	76.6	90.3	76.8	90.9	81.7	81.92	83.94	85.37	83.74	0.07	39.6	40.2	40.1	40.0	34.09	34.12	34.08	33.98	17:52
87.8	76.6	90.3	76.8	90.9	81.7	81.92	83.94	85.37	83.74	0.07	39.6	40.0	40.1	39.9	34.13	34.16	34.16	34.02	17:53
87.7	76.6	90.2	76.7	91.0	81.5	81.92	83.87	85.32	83.71	0.07	39.6	40.1	40.2	40.0	34.07	34.11	34.11	34.03	17:54
87.9	76.6	90.3	76.8	90.9	81.6	81.92	83.93	85.35	83.73	0.07	39.7	40.1	40.2	40.0	34.15	34.19	34.16	34.07	17:55
87.8	76.6	90.3	76.7	90.9	81.7	81.94	83.89	85.38	83.74	0.07	39.6	40.1	40.1	39.9	34.17	34.19	34.19	34.08	17:56
87.8	76.6	90.3	76.7	90.9	81.7	81.93	83.92	85.37	83.74	0.07	39.5	40.1	40.1	40.0	34.23	34.25	34.26	34.14	17:57
87.9	76.7	90.2	76.7	91.0	81.5	81.95	83.90	85.35	83.73	0.07	39.7	40.1	40.2	40.0	34.16	34.21	34.34	34.16	17:58
87.8	76.6	90.3	76.7	90.9	81.8	81.97	83.94	85.40	83.77	0.07	39.7	40.0	40.1	39.9	34.18	34.24	34.24	34.11	17:59
87.7	76.7	90.2	76.7	91.0	81.7	81.94	83.89	85.38	83.74	0.07	39.6	40.0	40.2	39.9	34.21	34.28	34.28	34.17	18:00
87.7	76.7	90.2	76.7	91.0	81.6	81.94	83.90	85.35	83.73	0.07	39.7	40.1	40.1	40.0	34.21	34.26	34.24	34.16	18:01
87.8	76.6	90.2	76.7	91.0	81.7	81.95	83.91	85.38	83.75	0.07	39.7	40.2	40.1	40.0	34.21	34.21	34.24	34.14	18:02

COMMENTS _____

Tested By CL Pitledge Date 6-5-93 Reviewed By Frank A. Deiney Date 6-5-93

AMPACITY TEST. JOB NUMBER 93-0501. SAMPLE NUMBER 93-0501-01 DATA FILE 3p6gno01.001 06-04-1993

POSITION 1		POSITION 2		POSITION 3		_POSITION AVERAGES_			AVG		AMBIENT TEMPERATURE				AMPERES				
T1mx	T1mn	T2mx	T2mn	T3mx	T3mn	T1avg	T2avg	T3avg	Twave	SLOPE	Tam1	Tam2	Tam3	Taav	Ib	Iw	Ir	I'	TIME
[illegible]	76.6	90.3	76.8	90.9	81.7	81.95	83.95	85.38	83.76	0.07	39.7	40.0	40.2	40.0	34.23	34.24	34.25	34.13	18:03
87.6	76.6	90.3	76.7	90.9	81.8	81.93	83.94	85.41	83.76	0.07	39.7	40.1	40.2	40.0	34.11	34.13	34.15	34.03	18:04
87.7	76.7	90.2	76.7	91.1	81.5	81.94	83.89	85.37	83.73	0.06	39.6	40.1	40.2	40.0	34.03	34.07	34.19	34.02	18:05
87.7	76.7	90.2	76.6	91.0	81.6	81.93	83.87	85.36	83.72	0.06	39.6	40.1	40.2	40.0	34.21	34.20	34.24	34.14	18:06
87.7	76.7	90.2	76.7	91.0	81.6	81.94	83.89	85.36	83.73	0.06	39.7	40.1	40.2	40.0	34.12	34.15	34.30	34.12	18:07
87.7	76.7	90.3	76.8	91.0	81.6	81.93	83.94	85.37	83.75	0.06	39.7	40.1	40.2	40.0	34.16	34.20	34.26	34.12	18:08
87.8	76.7	90.3	76.8	91.0	81.6	81.94	83.94	85.36	83.75	0.06	39.7	40.1	40.2	40.0	34.18	34.19	34.20	34.07	18:09
87.7	76.7	90.2	76.7	91.0	81.6	81.94	83.90	85.37	83.74	0.05	39.7	40.0	40.2	40.0	34.19	34.16	34.16	34.09	18:10
87.7	76.7	90.2	76.7	91.1	81.6	81.96	83.90	85.37	83.74	0.05	39.7	40.0	40.2	40.0	34.20	34.13	34.18	34.10	18:11
87.6	76.6	90.3	76.8	90.9	81.7	81.95	83.95	85.38	83.75	0.05	39.7	40.1	40.1	40.0	34.12	34.12	34.14	34.01	18:12
87.8	76.7	90.2	76.7	91.0	81.7	81.98	83.90	85.38	83.75	0.05	39.7	40.1	40.1	40.0	34.12	34.10	34.10	34.03	18:13
87.8	76.6	90.3	75.7	90.9	81.8	81.95	83.93	85.40	83.76	0.05	39.7	40.1	40.2	40.0	33.96	33.96	34.07	33.91	18:14
87.8	76.5	90.3	75.7	90.9	81.8	81.92	83.93	85.40	83.75	0.05	39.6	40.1	40.2	40.0	34.15	34.14	34.10	34.02	18:15
87.7	76.6	90.2	76.7	91.1	81.6	81.95	83.90	85.37	83.74	0.04	39.7	40.1	40.2	40.0	34.17	34.18	34.15	34.10	18:16
87.7	76.5	90.2	76.6	90.9	81.8	81.93	83.89	85.40	83.74	0.04	39.6	40.1	40.2	40.0	34.15	34.16	34.15	34.03	18:17
87.9	76.6	90.4	75.8	90.9	81.7	81.94	83.96	85.38	83.76	0.04	39.7	40.1	40.1	40.0	34.19	34.19	34.15	34.06	18:18
87.7	76.7	90.2	75.7	91.0	81.7	81.95	83.89	85.40	83.75	0.03	39.6	40.1	40.2	40.0	34.12	34.09	34.14	34.04	18:19
87.8	76.6	90.4	76.8	90.9	81.7	81.92	83.95	85.40	83.75	0.03	39.6	40.1	40.2	40.0	34.03	34.01	34.08	33.93	18:20
87.8	76.7	90.2	76.7	90.9	81.7	81.93	83.91	85.36	83.73	0.03	39.6	40.2	40.2	40.0	34.07	34.01	34.22	34.04	18:21
87.7	76.7	90.2	76.7	91.1	81.6	81.93	83.89	85.38	83.73	0.03	39.6	40.1	40.2	40.0	34.08	34.09	34.11	34.02	18:22
87.8	76.5	90.3	76.7	90.9	81.8	81.92	83.92	85.40	83.75	0.02	39.7	40.2	40.2	40.0	34.02	34.02	34.18	33.99	18:23
87.8	76.6	90.4	76.8	91.0	81.7	81.90	83.95	85.40	83.75	0.02	39.6	40.1	40.2	40.0	34.11	34.10	34.12	34.00	18:24
87.7	76.6	90.2	76.7	90.9	81.7	81.92	83.88	85.37	83.73	0.02	39.6	40.1	40.2	40.0	34.13	34.12	34.16	34.07	18:25
87.7	76.7	90.2	76.6	90.9	81.8	81.92	83.91	85.40	83.74	0.02	39.6	40.1	40.2	40.0	34.18	34.19	34.21	34.12	18:26
87.8	76.5	90.3	75.7	90.9	81.8	81.93	83.90	85.40	83.74	0.02	39.7	40.1	40.2	40.0	34.02	34.05	34.10	33.98	18:27
87.8	76.6	90.3	76.8	91.0	81.6	81.93	83.94	85.34	83.74	0.01	39.8	40.2	40.2	40.0	34.02	34.04	34.11	33.98	18:28
87.8	76.5	90.3	76.7	90.9	81.7	81.91	83.90	85.36	83.73	0.01	39.7	40.1	40.2	40.0	34.12	34.13	34.20	34.06	18:29
87.8	76.6	90.3	76.8	91.0	81.6	81.93	83.93	85.36	83.74	0.01	39.7	40.1	40.2	40.0	34.12	34.14	34.18	34.05	18:30
87.7	76.7	90.2	76.7	91.0	81.7	81.94	83.89	85.38	83.74	0.01	39.6	40.1	40.2	40.0	34.06	34.08	34.14	34.02	18:31
87.7	76.7	90.2	76.7	91.1	81.6	81.93	83.89	85.37	83.73	0.01	39.7	40.0	40.2	39.9	34.06	34.12	34.23	34.05	18:32
87.7	76.7	90.3	76.8	91.1	81.5	81.91	83.91	85.36	83.73	0.01	39.6	40.1	40.1	39.9	34.14	34.17	34.17	34.03	18:33
87.7	76.7	90.2	76.7	91.1	81.6	81.93	83.89	85.36	83.73	0.01	39.7	40.1	40.2	40.0	34.13	34.10	34.17	34.06	18:34
87.8	76.5	90.3	76.8	90.9	81.7	81.93	83.95	85.40	83.76	0.01	39.7	40.1	40.1	40.0	34.07	34.05	34.10	33.97	18:35
[illegible]	76.7	90.2	76.7	91.0	81.6	81.93	83.87	85.35	83.72	0.00	39.7	40.0	40.1	39.9	34.14	34.14	34.17	34.07	18:36
[illegible]	76.7	90.2	76.8	90.9	81.8	81.94	83.91	85.39	83.75	0.01	39.7	40.0	40.2	40.0	34.14	34.14	34.17	34.03	18:37
87.8	76.6	90.4	76.8	90.9	81.8	81.92	83.95	85.41	83.76	0.01	39.7	40.1	40.2	40.0	34.16	34.15	34.18	34.05	18:38
87.8	76.5	90.4	75.7	91.0	81.7	81.93	83.92	85.41	83.75	0.01	39.7	40.2	40.2	40.0	34.12	34.15	34.27	34.05	18:39
87.7	76.7	90.2	76.7	91.0	81.6	81.95	83.90	85.43	83.76	0.01	39.6	40.1	40.2	40.0	34.14	34.16	34.18	34.03	18:40
87.8	76.7	90.3	76.8	91.0	81.7	81.93	83.94	85.40	83.76	0.02	39.5	40.1	40.2	40.0	34.10	34.17	34.27	34.03	18:41
87.8	76.6	90.3	76.6	91.0	81.7	81.94	83.89	85.38	83.73	0.02	39.6	40.1	40.2	40.0	34.12	34.22	34.16	34.09	18:42
87.7	76.5	90.3	76.7	90.9	81.5	81.91	83.90	85.41	83.74	0.02	39.7	40.1	40.2	40.0	34.12	34.20	34.16	34.08	18:43
87.8	76.6	90.3	76.7	91.0	81.8	81.93	83.95	85.43	83.77	0.02	39.7	40.1	40.2	40.0	34.20	34.25	34.23	34.13	18:44
87.8	76.7	90.3	76.8	91.0	81.7	81.95	83.95	85.40	83.76	0.02	39.7	40.0	40.2	39.9	34.16	34.23	34.20	34.08	18:45
87.8	76.6	90.3	76.8	90.9	81.7	81.94	83.95	85.41	83.77	0.02	39.7	40.0	40.2	40.0	34.19	34.27	34.23	34.12	18:46
87.8	76.7	90.4	76.9	91.0	81.8	81.96	83.96	85.43	83.79	0.02	39.6	40.1	40.2	40.0	34.24	34.28	34.25	34.14	18:47
87.7	76.7	90.2	76.7	91.1	81.7	81.96	83.91	85.42	83.76	0.02	39.7	40.1	40.2	40.0	34.16	34.19	34.30	34.14	18:48
87.7	76.7	90.2	76.7	91.0	81.7	81.94	83.91	85.42	83.75	0.02	39.7	40.1	40.2	40.0	34.13	34.17	34.15	34.08	18:49
87.8	76.7	90.3	76.8	91.0	81.6	81.93	83.94	85.40	83.76	0.02	39.7	40.1	40.1	40.0	34.02	34.07	34.18	34.00	18:50
87.8	76.5	90.4	76.8	91.0	81.8	81.96	83.97	85.43	83.79	0.02	39.6	40.0	40.1	39.9	34.10	34.12	34.12	33.98	18:51
87.8	76.7	90.3	76.7	91.0	81.7	81.95	83.91	85.40	83.75	0.02	39.7	40.0	40.2	40.0	34.18	34.21	34.22	34.12	18:52
87.7	76.6	90.3	76.7	91.0	81.7	81.94	83.93	85.43	83.77	0.02	39.7	40.1	40.1	40.0	34.13	34.21	34.20	34.08	18:53
87.8	76.6	90.3	76.8	91.0	81.8	81.96	83.96	85.45	83.79	0.02	39.6	40.1	40.1	39.9	34.20	34.25	34.20	34.10	18:54
87.8	76.5	90.4	75.8	91.0	81.8	81.95	83.99	85.45	83.80	0.03	39.7	40.2	40.2	40.0	34.19	34.20	34.20	34.09	18:55
87.7	76.7	90.2	76.7	91.1	81.7	81.95	83.91	85.41	83.76	0.03	39.7	40.1	40.2	40.0	34.17	34.22	34.18	34.12	18:56
87.8	76.7	90.3	76.8	91.0	81.7	81.96	83.97	85.41	83.78	0.03	39.7	40.1	40.2	40.0	34.17	34.22	34.30	34.14	18:57
87.8	76.6	90.3	76.7	91.0	81.8	81.92	83.93	85.45	83.76	0.03	39.7	40.0	40.2	40.0	34.18	34.27	34.23	34.14	18:58
87.7	76.7	90.2	76.7	91.1	81.6	81.96	83.91	85.41	83.76	0.03	39.7	40.1	40.2	40.0	34.19	34.25	34.33	34.20	18:59
87.7	76.7	90.4	76.8	91.0	81.8	81.97	83.99	85.46	83.81	0.04	39.6	40.1	40.1	40.0	34.18	34.22	34.25	34.08	19:00
87.8	76.7	90.3	76.7	91.0	81.8	81.96	83.95	85.45	83.79	0.04	39.7	40.1	40.2	40.0	34.10	34.12	34.20	34.05	19:01
87.8	76.6	90.3	76.8	91.1	81.6	81.96	83.98	85.43	83.79	0.04	39.7	40.1	40.1	40.0	34.17	34.22	34.25	34.11	19:02

COMMENTS _____

Tested By CL Rutledge Date 6-5-93 Reviewed By Frank G. Denney Date 6-5-93

AMPACITY TEST. JOB NUMBER 93-0501. SAMPLE NUMBER 93-0501-01 DATA FILE 3p6gno01.001 06-04-1993

POSITION 1		POSITION 2		POSITION 3		_POSITION AVERAGES_			AVG		AMBIENT TEMPERATURE				AMPERES				
T1mx	T1mn	T2mx	T2mn	T3mx	T3mn	T1avg	T2avg	T3avg	Twave	SLOPE	Tam1	Tam2	Tam3	Taav	Ib	Iw	Ir	I'	TIME
87.8	76.6	90.4	76.8	91.0	81.6	81.95	83.97	85.44	83.79	0.04	39.7	40.2	40.2	40.0	34.17	34.25	34.22	34.11	19:03
87.[illegible]	76.7	90.2	76.7	91.1	81.7	81.94	83.90	85.42	83.75	0.04	39.7	40.1	40.1	40.0	34.07	34.06	34.07	34.00	19:04
87.[illegible]	76.6	90.3	76.8	91.1	81.6	81.93	83.96	85.41	83.77	0.04	39.7	40.0	40.2	40.0	34.10	34.11	34.11	34.00	19:05
87.9	76.6	90.4	76.8	91.0	81.9	81.96	83.98	85.47	83.80	0.05	39.7	40.1	40.2	40.0	34.02	33.99	34.18	33.95	19:06
87.7	76.7	90.3	76.7	91.1	81.7	81.94	83.92	85.43	83.76	0.04	39.7	40.1	40.2	40.0	34.03	34.10	34.08	33.99	19:07
87.7	76.6	90.3	76.8	91.1	81.7	81.95	83.97	85.43	83.78	0.05	39.7	40.1	40.2	40.0	34.02	34.14	34.15	34.02	19:08
87.8	76.6	90.3	76.7	91.1	81.7	81.95	83.94	85.43	83.77	0.05	39.7	40.1	40.2	40.0	34.09	34.20	34.12	34.07	19:09
87.8	76.6	90.3	76.7	91.0	81.6	81.94	83.93	85.43	83.77	0.05	39.7	40.1	40.2	40.0	34.14	34.22	34.14	34.09	19:10
87.8	76.6	90.3	76.8	91.0	81.5	81.96	83.96	85.45	83.79	0.05	39.7	40.1	40.2	40.0	34.15	34.22	34.11	34.05	19:11
87.7	76.7	90.2	76.7	91.1	81.6	81.92	83.90	85.40	83.74	0.05	39.7	40.1	40.2	40.0	34.13	34.22	34.09	34.07	19:12
87.8	76.7	90.3	76.8	91.0	81.7	81.94	83.97	85.41	83.77	0.05	39.7	40.1	40.1	40.0	34.15	34.21	34.11	34.05	19:13
87.7	76.7	90.3	76.8	91.1	81.6	81.94	83.93	85.39	83.76	0.05	39.7	40.1	40.2	40.0	34.17	34.23	34.10	34.08	19:14
87.7	76.7	90.3	76.7	91.0	81.8	81.97	83.93	85.45	83.78	0.05	39.7	40.1	40.2	40.0	34.08	34.15	34.19	34.05	19:15
87.8	76.7	90.4	76.8	91.0	81.9	81.97	83.99	85.47	83.81	0.05	39.7	40.1	40.1	40.0	34.14	34.23	34.11	34.04	19:16
87.7	76.7	90.3	76.8	91.1	81.6	81.92	83.92	85.41	83.75	0.05	39.7	40.1	40.2	40.0	34.07	34.16	34.20	34.05	19:17
87.8	76.7	90.3	76.7	91.1	81.8	81.97	83.93	85.46	83.79	0.05	39.6	40.1	40.2	40.0	34.14	34.28	34.15	34.08	19:18
87.8	76.7	90.3	76.8	91.0	81.8	81.97	83.96	85.45	83.79	0.05	39.7	40.1	40.1	40.0	34.11	34.26	34.11	34.08	19:19
87.8	76.7	90.3	76.8	91.0	81.8	81.97	83.95	85.47	83.80	0.06	39.7	40.1	40.2	40.0	34.11	34.26	34.10	34.07	19:20
87.8	76.6	90.3	76.8	91.0	81.8	81.96	83.95	85.48	83.79	0.06	39.6	40.1	40.1	40.0	34.06	34.19	34.08	34.01	19:21
87.8	76.6	90.3	76.7	91.1	81.8	81.94	83.93	85.45	83.77	0.05	39.7	40.0	40.2	40.0	34.14	34.27	34.15	34.09	19:22
87.7	76.7	90.4	76.7	91.0	81.8	81.94	83.94	85.48	83.78	0.05	39.7	40.0	40.2	40.0	34.12	34.26	34.14	34.05	19:23
87.8	76.6	90.3	76.8	91.0	81.8	81.94	83.97	85.46	83.79	0.06	39.7	40.0	40.1	39.9	34.01	34.14	34.16	33.98	19:24
87.8	76.6	90.4	76.7	91.1	81.7	81.96	83.96	85.43	83.78	0.05	39.7	40.0	40.2	40.0	34.07	34.16	34.10	33.93	19:25
87.7	76.7	90.3	76.8	91.0	81.8	81.96	83.96	85.45	83.79	0.05	39.7	40.0	40.1	39.9	34.02	34.13	34.16	34.01	19:26
87.8	76.7	90.3	76.9	91.1	81.7	81.98	83.99	85.45	83.80	0.05	39.7	40.0	40.2	40.0	34.06	34.14	34.07	33.98	19:27
87.8	76.6	90.2	76.8	91.0	81.8	81.93	83.94	85.46	83.78	0.05	39.7	40.1	40.2	40.0	34.14	34.21	34.11	34.09	19:28
87.8	76.6	90.3	76.7	91.0	81.8	81.94	83.93	85.46	83.78	0.05	39.7	40.1	40.2	40.0	34.12	34.20	34.14	34.07	19:29
87.8	76.7	90.4	76.8	91.0	81.8	81.97	83.99	85.47	83.81	0.05	39.6	40.0	40.1	39.9	34.13	34.25	34.16	34.04	19:30
87.8	76.6	90.3	76.9	91.1	81.7	81.96	83.99	85.44	83.80	0.05	39.7	40.0	40.1	39.9	34.21	34.30	34.24	34.14	19:31
87.7	76.7	90.2	76.8	91.1	81.6	81.98	83.95	85.44	83.79	0.05	39.7	40.1	40.2	40.0	34.12	34.21	34.15	34.08	19:32
87.8	76.7	90.3	76.8	91.0	81.8	81.98	83.97	85.49	83.81	0.05	39.7	40.0	40.2	40.0	34.05	34.14	34.21	34.05	19:33
87.8	76.7	90.2	76.7	91.0	81.9	81.98	83.94	85.46	83.79	0.04	39.7	40.1	40.2	40.0	34.13	34.22	34.14	34.09	19:34
87.7	76.7	90.3	76.9	91.1	81.6	81.96	83.97	85.44	83.79	0.04	39.7	40.1	40.1	40.0	34.18	34.28	34.21	34.12	19:35
87.7	76.7	90.4	76.8	91.1	81.7	81.97	83.98	85.46	83.80	0.04	39.7	40.1	40.2	40.0	34.16	34.24	34.16	34.06	19:36
87.9	76.6	90.4	76.7	91.1	81.7	81.96	83.95	85.46	83.79	0.04	39.7	40.0	40.1	39.9	34.09	34.15	34.14	34.00	19:37
87.[illegible]	76.7	90.3	76.7	91.1	81.8	81.99	83.95	85.48	83.81	0.04	39.6	40.1	40.1	39.9	34.17	34.23	34.23	34.05	19:38
87.[illegible]	76.7	90.4	76.8	91.1	81.8	82.00	83.98	85.51	83.83	0.04	39.7	40.1	40.1	40.0	34.15	34.21	34.23	34.06	19:39
87.9	76.6	90.4	76.8	91.1	81.7	81.97	83.98	85.47	83.81	0.04	39.7	40.1	40.1	40.0	34.12	34.12	34.15	34.00	19:40
87.8	75.7	90.4	76.9	91.2	81.7	82.00	84.01	85.49	83.83	0.05	39.7	40.0	40.2	40.0	34.15	34.14	34.15	34.02	19:41
87.9	76.7	90.3	76.8	91.1	81.7	81.98	83.96	85.44	83.79	0.04	39.7	40.0	40.1	39.9	34.06	34.04	34.15	33.99	19:42
87.8	76.7	90.4	76.9	91.1	81.8	81.97	84.01	85.50	83.83	0.04	39.6	40.0	40.2	39.9	34.18	34.13	34.14	34.01	19:43
87.9	76.6	90.3	76.8	91.0	81.9	81.98	83.99	85.50	83.83	0.05	39.6	40.0	40.1	39.9	34.19	34.14	34.16	34.05	19:44
87.7	76.7	90.2	76.9	91.1	81.7	81.96	83.94	85.44	83.78	0.04	39.6	40.0	40.1	39.9	34.09	34.13	34.04	33.99	19:45
87.7	76.7	90.4	76.8	91.1	81.8	81.98	83.96	85.50	83.81	0.04	39.7	40.0	40.2	40.0	34.08	34.14	34.08	33.99	19:46
87.6	76.7	90.4	76.9	91.1	81.7	81.97	84.00	85.48	83.82	0.05	39.7	40.1	40.1	40.0	34.03	34.11	34.02	33.99	19:47
87.8	76.6	90.4	76.8	91.1	81.7	81.94	83.97	85.46	83.79	0.04	39.6	40.0	40.1	39.9	33.99	34.06	33.97	33.85	19:48
87.8	76.7	90.4	76.9	91.1	81.7	81.97	83.99	85.45	83.80	0.04	39.7	40.1	40.1	40.0	34.05	34.13	34.07	33.97	19:49
87.8	76.7	90.4	76.8	91.1	81.7	81.96	83.99	85.45	83.80	0.04	39.7	40.0	40.1	40.0	34.07	34.13	34.09	33.98	19:50
87.8	76.7	90.4	76.8	91.1	81.7	81.94	83.95	85.47	83.79	0.04	39.6	40.1	40.2	40.0	34.04	34.10	34.20	33.98	19:51
87.9	76.6	90.3	76.8	91.0	81.8	81.97	83.97	85.46	83.80	0.04	39.7	40.1	40.2	40.0	34.14	34.20	34.14	34.06	19:52
87.9	76.7	90.4	76.8	91.0	81.8	81.97	83.98	85.47	83.81	0.04	39.7	40.0	40.2	40.0	34.08	34.16	34.09	33.99	19:53
87.7	76.7	90.3	76.7	91.0	81.8	81.93	83.92	85.49	83.78	0.04	39.7	40.1	40.1	40.0	34.09	34.17	34.09	34.03	19:54
87.9	76.6	90.3	76.8	91.0	81.3	81.98	83.98	85.46	83.81	0.04	39.6	40.1	40.2	40.0	34.12	34.20	34.13	34.06	19:55
87.8	76.7	90.4	76.8	91.1	81.7	81.95	83.97	85.45	83.79	0.04	39.6	40.1	40.1	40.0	34.13	34.22	34.16	34.05	19:56
87.7	76.7	90.3	76.7	91.1	81.7	81.97	83.93	85.46	83.79	0.04	39.6	40.0	40.1	39.9	34.16	34.24	34.14	34.06	19:57
87.8	76.7	90.4	76.9	91.1	81.9	81.96	83.99	85.48	83.81	0.04	39.6	40.0	40.1	39.9	34.03	34.10	34.13	33.94	19:58
87.7	76.7	90.3	76.8	91.0	81.3	81.97	83.94	85.47	83.79	0.03	39.7	40.0	40.1	39.9	34.08	34.18	34.08	34.00	19:59
87.9	76.6	90.3	76.8	91.1	81.7	81.95	83.98	85.46	83.80	0.03	39.7	40.0	40.1	39.9	34.00	34.11	34.12	33.95	20:00
87.7	76.7	90.2	76.8	91.0	81.3	81.94	83.94	85.46	83.78	0.03	39.7	40.0	40.2	39.9	34.12	34.22	34.10	34.06	20:01
87.8	76.7	90.4	76.8	91.1	81.7	81.96	83.97	85.47	83.80	0.03	39.7	40.0	40.1	39.9	34.05	34.13	34.02	33.94	20:02

COMMENTS _____

Tested By C L Rutledge Date 6-5-93 Reviewed By Frank A. Denney Date 6-5-93

AMPACITY TEST. JOB NUMBER 93-0501. SAMPLE NUMBER 93-0501-02 DATA FILE 3p6gno02.002 06-07-1993

POSITION 1		POSITION 2		POSITION 3		POSITION AVERAGES			AVG		AMBIENT TEMPERATURE				AMPERES				
T1mx	T1mn	T2mx	T2mn	T3mx	T3mn	T1avg	T2avg	T3avg	Twave	SLOPE	Tam1	Tam2	Tam3	Taav	Ib	Iw	Ir	I'	TIME
[illegible]	68.0	89.5	78.5	89.7	80.8	83.29	84.40	84.20	83.95	0.01	39.4	39.4	39.7	39.5	33.88	33.98	33.84	33.93	18:41
89.0	68.1	89.6	78.6	89.8	80.8	83.32	84.41	84.22	83.98	0.01	39.4	39.4	39.6	39.5	33.86	33.98	33.83	33.81	18:42
89.1	68.0	89.7	78.5	89.7	80.9	83.30	84.43	84.24	83.99	0.01	39.4	39.4	39.5	39.5	33.86	33.93	33.82	33.78	18:43
89.0	68.1	89.6	78.6	89.8	80.8	83.33	84.45	84.23	84.00	0.01	39.4	39.5	39.6	39.5	33.92	33.99	33.90	33.99	18:44
89.0	68.1	89.7	78.5	89.8	80.8	83.35	84.44	84.25	84.01	0.01	39.4	39.4	39.6	39.5	33.90	33.92	33.85	33.81	18:45
89.1	68.1	89.7	78.6	89.7	81.0	83.33	84.44	84.27	84.01	0.00	39.4	39.5	39.6	39.5	33.94	33.96	33.90	33.85	18:46
89.1	68.1	89.7	78.6	89.7	81.0	83.33	84.43	84.27	84.01	0.00	39.4	39.5	39.5	39.5	33.71	33.82	33.82	33.69	18:47
89.1	68.1	89.7	78.6	89.8	81.0	83.31	84.45	84.25	84.00	0.00	39.5	39.5	39.6	39.5	33.74	33.88	33.79	33.73	18:48
89.1	68.1	89.6	78.5	89.8	80.8	83.33	84.45	84.24	84.00	0.00	39.4	39.4	39.6	39.5	33.75	33.88	33.72	33.71	18:49
89.1	68.1	89.7	78.6	89.8	81.0	83.32	84.46	84.28	84.02	0.01	39.4	39.5	39.6	39.5	33.79	33.94	33.77	33.75	18:50
89.0	68.1	89.7	78.5	89.7	80.8	83.35	84.43	84.21	84.00	0.00	39.5	39.5	39.6	39.5	33.74	33.87	33.71	33.71	18:51
89.0	68.1	89.6	78.6	89.8	80.8	83.33	84.42	84.22	83.99	0.00	39.4	39.5	39.7	39.5	33.78	33.90	33.76	33.75	18:52
89.0	68.1	89.7	78.5	89.8	80.8	83.35	84.44	84.27	84.02	0.00	39.4	39.5	39.6	39.5	33.81	33.92	33.79	33.77	18:53
89.1	68.1	89.7	78.5	89.7	80.9	83.33	84.41	84.23	83.99	0.00	39.5	39.5	39.6	39.5	33.73	33.84	33.84	33.73	18:54
89.1	68.1	89.6	78.6	89.8	80.8	83.33	84.45	84.24	84.01	0.00	39.5	39.5	39.6	39.5	33.84	33.92	33.75	33.78	18:55
89.0	68.1	89.7	78.5	89.7	80.9	83.34	84.41	84.26	84.00	0.01	39.4	39.4	39.6	39.5	33.73	33.89	33.82	33.73	18:56
89.1	68.1	89.6	78.6	89.8	80.8	83.36	84.44	84.24	84.01	0.01	39.4	39.5	39.6	39.5	33.78	33.92	33.73	33.75	18:57
89.1	68.1	89.7	78.6	89.8	81.0	83.34	84.45	84.28	84.02	0.01	39.3	39.5	39.6	39.5	33.83	33.96	33.76	33.76	18:58
89.0	68.1	89.6	78.6	89.9	80.8	83.35	84.43	84.29	84.02	0.02	39.5	39.5	39.5	39.5	33.84	33.96	33.76	33.81	18:59
89.1	68.1	89.7	78.5	89.8	80.9	83.33	84.42	84.27	84.01	0.02	39.3	39.5	39.6	39.5	33.89	34.03	33.81	33.82	19:00
89.1	68.1	89.6	78.7	89.9	80.9	83.34	84.47	84.26	84.03	0.03	39.5	39.5	39.7	39.6	33.81	33.94	33.85	33.83	19:01
89.1	68.1	89.7	78.6	89.8	81.0	83.34	84.45	84.30	84.03	0.04	39.4	39.4	39.6	39.5	33.90	34.02	33.80	33.82	19:02
89.1	68.1	89.7	78.7	89.9	80.9	83.38	84.49	84.27	84.05	0.04	39.5	39.5	39.7	39.5	33.87	33.98	33.92	33.87	19:03
89.1	68.1	89.7	78.5	89.8	80.9	83.37	84.45	84.29	84.04	0.05	39.3	39.5	39.6	39.5	33.91	34.01	33.83	33.83	19:04
89.1	68.1	89.6	78.6	89.8	80.8	83.36	84.45	84.27	84.03	0.05	39.4	39.4	39.6	39.5	33.76	33.88	33.66	33.70	19:05
89.1	68.1	89.7	78.5	89.8	80.9	83.35	84.44	84.28	84.02	0.06	39.5	39.4	39.6	39.5	33.75	33.89	33.69	33.68	19:06
89.1	68.1	89.7	78.7	89.9	80.8	83.37	84.49	84.26	84.04	0.06	39.5	39.5	39.6	39.5	33.86	34.00	33.78	33.82	19:07
89.1	68.1	89.7	78.6	89.8	81.1	83.35	84.48	84.32	84.05	0.07	39.4	39.5	39.7	39.5	33.85	34.01	33.76	33.79	19:08
89.1	68.1	89.7	78.5	89.7	80.9	83.34	84.42	84.28	84.01	0.07	39.4	39.6	39.7	39.5	33.83	33.99	33.77	33.80	19:09
89.1	68.1	89.7	78.7	89.9	81.0	83.36	84.50	84.33	84.06	0.07	39.5	39.5	39.6	39.5	33.74	33.92	33.83	33.77	19:10
89.0	68.1	89.7	78.6	89.8	80.8	83.36	84.46	84.29	84.04	0.08	39.5	39.5	39.6	39.5	33.82	33.99	33.76	33.80	19:11
89.2	68.2	89.7	78.7	89.8	81.1	83.39	84.49	84.32	84.07	0.08	39.4	39.4	39.6	39.5	33.84	34.02	33.78	33.78	19:12
[illegible]	68.1	89.7	78.6	89.8	80.9	83.37	84.46	84.30	84.04	0.09	39.4	39.5	39.6	39.5	33.93	34.11	33.87	33.89	19:13
[illegible]	68.1	89.7	78.6	89.8	80.9	83.39	84.48	84.32	84.06	0.09	39.5	39.5	39.6	39.5	33.86	34.04	33.84	33.85	19:14
89.2	68.1	89.7	78.7	89.9	81.1	83.37	84.50	84.35	84.07	0.10	39.5	39.5	39.6	39.5	33.91	34.05	33.86	33.89	19:15
89.0	68.1	89.6	78.6	89.9	80.8	83.35	84.45	84.31	84.04	0.10	39.5	39.5	39.6	39.5	33.88	34.02	33.83	33.85	19:16
89.1	68.2	89.7	78.6	89.9	80.9	83.41	84.49	84.35	84.08	0.10	39.4	39.5	39.6	39.5	33.85	33.98	33.93	33.84	19:17
89.2	68.2	89.7	78.7	89.9	81.0	83.42	84.51	84.32	84.08	0.11	39.4	39.5	39.6	39.5	33.94	34.05	33.90	33.87	19:18
89.2	68.2	89.8	78.7	89.8	81.1	83.40	84.51	84.36	84.09	0.11	39.5	39.4	39.6	39.5	33.94	34.05	33.91	33.87	19:19
89.1	68.1	89.7	78.6	89.8	80.9	83.39	84.48	84.34	84.07	0.12	39.5	39.5	39.6	39.5	33.96	34.06	33.92	33.90	19:20
89.2	68.2	89.8	78.7	89.8	81.0	83.40	84.52	84.37	84.10	0.12	39.5	39.4	39.6	39.5	34.00	34.11	33.96	33.92	19:21
89.1	68.1	89.7	78.7	89.9	80.9	83.40	84.52	84.33	84.08	0.12	39.5	39.5	39.6	39.5	33.97	34.06	33.94	33.94	19:22
89.2	68.2	89.7	78.8	89.9	81.0	83.42	84.54	84.35	84.11	0.13	39.4	39.5	39.6	39.5	33.85	34.03	33.84	33.83	19:23
89.2	68.2	89.8	78.7	89.9	81.1	83.42	84.54	84.38	84.11	0.13	39.4	39.5	39.6	39.5	33.83	33.99	33.92	33.81	19:24
89.1	68.2	89.7	78.7	89.9	80.9	83.41	84.51	84.34	84.09	0.14	39.4	39.4	39.6	39.5	33.85	34.03	33.80	33.81	19:25
89.2	68.2	89.7	78.8	90.0	81.0	83.43	84.56	84.37	84.12	0.14	39.5	39.5	39.6	39.6	33.86	34.03	33.79	33.82	19:26
89.2	68.2	89.8	78.8	89.9	81.1	83.42	84.54	84.37	84.11	0.14	39.4	39.4	39.6	39.5	33.80	34.02	33.75	33.75	19:27
89.2	68.2	89.7	78.8	90.0	81.0	83.41	84.54	84.39	84.11	0.15	39.4	39.4	39.6	39.5	33.85	34.07	33.78	33.81	19:28
89.2	68.2	89.8	78.7	89.9	81.1	83.45	84.54	84.35	84.12	0.15	39.4	39.5	39.6	39.5	33.87	34.09	33.82	33.81	19:29
89.3	68.2	89.9	78.8	89.9	81.0	83.44	84.56	84.38	84.13	0.15	39.4	39.5	39.6	39.5	33.92	34.06	33.81	33.83	19:30
89.3	68.2	89.8	78.9	90.0	81.0	83.47	84.57	84.38	84.14	0.16	39.4	39.5	39.6	39.5	33.85	34.00	33.84	33.80	19:31
89.3	68.2	89.8	78.8	89.9	81.1	83.42	84.57	84.40	84.13	0.16	39.4	39.5	39.6	39.5	33.94	34.14	33.84	33.87	19:32
89.3	68.2	89.8	78.9	89.9	81.2	83.44	84.56	84.41	84.14	0.16	39.3	39.5	39.6	39.5	33.85	34.03	33.80	33.81	19:33
89.2	68.2	89.8	78.6	89.9	81.0	83.45	84.52	84.41	84.13	0.17	39.4	39.5	39.7	39.5	33.95	34.12	33.85	33.87	19:34
89.2	68.2	89.7	78.8	90.0	81.0	83.46	84.58	84.39	84.15	0.17	39.4	39.6	39.7	39.5	33.91	34.04	33.78	33.83	19:35
89.1	68.2	89.7	78.7	90.0	80.9	83.45	84.54	84.39	84.13	0.17	39.5	39.5	39.6	39.5	33.91	34.04	33.78	33.83	19:36
89.2	68.2	89.9	78.9	90.0	81.0	83.48	84.58	84.38	84.15	0.17	39.4	39.4	39.6	39.5	33.88	34.01	33.76	33.78	19:37
89.2	68.2	89.8	78.7	89.9	81.1	83.47	84.56	84.43	84.15	0.17	39.5	39.5	39.6	39.5	33.88	33.98	33.72	33.75	19:38
89.2	68.2	89.7	78.8	90.0	81.0	83.43	84.57	84.41	84.14	0.17	39.5	39.5	39.6	39.5	33.82	33.92	33.68	33.73	19:39
89.3	68.2	89.8	78.7	89.9	81.2	83.46	84.57	84.43	84.15	0.18	39.4	39.5	39.6	39.5	33.72	33.84	33.74	33.64	19:40

COMMENTS _____

Tested By Cynthia L Rutledge Date 6-8-93 Reviewed By Frank A. Deimey Date 6-8-93

AMPACITY TEST. JOB NUMBER 93-0501. SAMPLE NUMBER 93-0501-02 DATA FILE 3p6gno02.002 06-07-1993

POSITION 1		POSITION 2		POSITION 3		POSITION AVERAGES			AVG		AMBIENT TEMPERATURE					AMPERES			
T1mx	T1mn	T2mx	T2mn	T3mx	T3mn	T1avg	T2avg	T3avg	Twave	SLOPE	Tam1	Tam2	Tam3	Taav	Ib	Iw	Ir	I'	TIME
[illegible]	68.2	89.8	78.7	89.9	81.1	83.45	84.55	84.42	84.14	0.17	89.5	89.5	89.6	89.5	83.94	84.06	83.83	83.83	19:41
89.2	68.2	89.7	78.7	90.0	80.9	83.45	84.55	84.40	84.13	0.17	89.5	89.5	89.6	89.5	83.89	84.02	83.75	83.79	19:42
89.3	68.3	89.8	78.8	90.0	81.1	83.49	84.58	84.40	84.16	0.18	89.4	89.5	89.6	89.5	83.86	84.05	83.79	83.80	19:43
89.2	68.3	89.8	78.7	89.9	81.1	83.49	84.55	84.44	84.16	0.18	89.4	89.4	89.6	89.5	83.81	84.06	83.78	83.79	19:44
89.3	68.2	89.8	78.9	90.0	81.1	83.50	84.50	84.44	84.13	0.18	89.4	89.4	89.5	89.5	83.89	84.04	83.78	83.80	19:45
89.2	68.2	89.8	78.7	89.9	81.1	83.48	84.56	84.44	84.16	0.19	89.4	89.4	89.6	89.5	83.94	84.08	83.81	83.81	19:46
89.3	68.2	89.8	78.8	90.0	81.1	83.47	84.50	84.43	84.17	0.19	89.5	89.5	89.7	89.5	83.81	83.97	83.97	83.80	19:47
89.3	68.2	89.8	78.8	90.0	81.1	83.46	84.59	84.44	84.16	0.19	89.4	89.4	89.6	89.5	83.91	84.04	83.84	83.81	19:48
89.3	68.2	89.3	78.8	90.0	81.2	83.47	84.60	84.47	84.15	0.19	89.4	89.5	89.5	89.5	83.89	83.99	83.82	83.79	19:49
89.2	68.3	89.8	78.7	90.0	81.0	83.48	84.56	84.44	84.16	0.19	89.4	89.5	89.7	89.5	83.88	83.98	83.82	83.79	19:50
89.3	68.3	89.8	78.8	89.9	81.2	83.51	84.60	84.46	84.19	0.19	89.5	89.5	89.6	89.5	83.90	83.94	83.79	83.76	19:51
89.3	68.3	89.8	78.7	90.1	81.0	83.50	84.58	84.44	84.18	0.19	89.4	89.5	89.6	89.5	83.96	84.03	83.86	83.83	19:52
89.2	68.2	89.8	78.7	89.9	81.1	83.48	84.55	84.49	84.17	0.19	89.4	89.5	89.6	89.5	83.95	84.04	83.87	83.84	19:53
89.3	68.3	89.8	78.8	90.1	81.0	83.51	84.61	84.45	84.19	0.19	89.5	89.5	89.7	89.6	83.95	84.01	83.98	83.90	19:54
89.2	68.3	89.2	78.7	90.0	81.1	83.54	84.60	84.48	84.21	0.19	89.4	89.5	89.6	89.5	84.05	84.08	83.91	83.91	19:55
89.3	68.3	89.8	78.8	90.1	81.2	83.52	84.63	84.50	84.22	0.19	89.4	89.5	89.5	89.5	83.88	83.95	83.91	83.79	19:56
89.3	68.3	89.8	78.8	90.1	81.1	83.54	84.64	84.47	84.22	0.20	89.3	89.5	89.5	89.5	83.94	84.08	83.76	83.80	19:57
89.4	68.3	89.8	78.8	90.1	81.2	83.55	84.65	84.49	84.23	0.20	89.3	89.5	89.5	89.5	83.99	84.10	83.79	83.84	19:58
89.3	68.3	89.9	78.7	90.0	81.2	83.51	84.59	84.50	84.20	0.20	89.4	89.5	89.5	89.5	83.97	84.07	83.77	83.81	19:59
89.2	68.3	89.8	78.7	90.0	81.0	83.53	84.60	84.47	84.20	0.20	89.4	89.5	89.6	89.5	83.90	84.00	83.71	83.76	20:00
89.3	68.3	89.8	78.8	90.1	81.1	83.54	84.65	84.47	84.22	0.20	89.4	89.4	89.6	89.5	83.85	83.94	83.68	83.69	20:01
89.2	68.3	89.9	78.6	89.9	81.1	83.53	84.58	84.45	84.19	0.20	89.4	89.5	89.7	89.5	83.92	84.00	83.74	83.76	20:02
89.3	68.3	89.9	78.8	90.0	81.2	83.53	84.65	84.50	84.23	0.20	89.4	89.5	89.6	89.5	83.81	83.90	83.79	83.70	20:03
89.4	68.3	89.9	78.8	90.0	81.3	83.54	84.65	84.53	84.24	0.20	89.4	89.4	89.6	89.5	83.90	84.00	83.75	83.73	20:04
89.3	68.3	89.8	78.8	90.1	81.1	83.54	84.64	84.50	84.23	0.20	89.5	89.5	89.7	89.5	83.90	83.95	83.74	83.73	20:05
89.3	68.3	89.8	78.8	90.1	81.1	83.55	84.64	84.49	84.23	0.20	89.3	89.5	89.6	89.5	83.82	83.90	83.74	83.70	20:06
89.3	68.3	89.9	78.7	90.0	81.2	83.54	84.61	84.51	84.22	0.19	89.4	89.4	89.6	89.5	83.82	83.90	83.73	83.67	20:07
89.3	68.3	89.8	78.8	90.0	81.2	83.53	84.63	84.50	84.22	0.19	89.4	89.4	89.6	89.5	83.88	83.94	83.79	83.74	20:08
89.3	68.3	89.9	78.7	90.0	81.2	83.53	84.60	84.48	84.20	0.19	89.4	89.5	89.6	89.5	83.82	83.86	83.78	83.69	20:09
89.4	68.3	89.8	78.8	90.1	81.2	83.54	84.65	84.50	84.23	0.18	89.4	89.5	89.6	89.5	83.80	83.87	83.89	83.73	20:10
89.3	68.3	89.8	78.8	90.1	81.2	83.53	84.64	84.53	84.23	0.18	89.3	89.5	89.6	89.5	83.88	83.94	83.84	83.77	20:11
89.3	68.3	89.8	78.8	90.1	81.0	83.56	84.62	84.50	84.22	0.18	89.4	89.5	89.6	89.5	83.91	83.94	83.87	83.80	20:12
89.3	68.3	89.9	78.7	90.0	81.2	83.57	84.61	84.51	84.23	0.18	89.4	89.5	89.6	89.5	83.87	83.98	83.84	83.74	20:13
[illegible]	68.3	89.9	78.7	90.0	81.0	83.56	84.61	84.47	84.22	0.17	89.4	89.5	89.6	89.5	83.80	83.85	83.75	83.68	20:14
[illegible]	68.3	89.8	78.8	90.1	81.0	83.57	84.62	84.49	84.22	0.17	89.4	89.5	89.6	89.5	83.87	83.94	83.83	83.77	20:15
89.3	68.3	89.8	78.8	90.1	81.1	83.56	84.62	84.49	84.22	0.16	89.3	89.6	89.6	89.5	83.88	83.98	83.86	83.80	20:16
89.3	68.3	89.8	78.7	90.1	81.0	83.55	84.61	84.49	84.22	0.16	89.4	89.5	89.6	89.5	83.80	83.90	83.79	83.71	20:17
89.3	68.3	89.9	78.7	90.0	81.2	83.57	84.61	84.50	84.23	0.16	89.4	89.5	89.6	89.5	83.86	83.99	83.84	83.76	20:18
89.4	68.3	89.9	78.8	90.0	81.3	83.56	84.65	84.54	84.25	0.16	89.4	89.4	89.5	89.5	83.80	83.93	83.90	83.73	20:19
89.2	68.3	89.8	78.7	90.0	81.1	83.53	84.60	84.50	84.21	0.15	89.4	89.5	89.6	89.5	83.82	84.00	83.75	83.74	20:20
89.3	68.3	89.9	78.7	90.0	81.2	83.53	84.60	84.53	84.22	0.15	89.4	89.4	89.6	89.5	83.73	83.88	83.72	83.63	20:21
89.2	68.3	89.8	78.7	90.1	81.1	83.56	84.62	84.50	84.23	0.14	89.3	89.3	89.6	89.4	83.68	83.82	83.65	83.58	20:22
89.4	68.3	89.8	78.9	90.1	81.1	83.56	84.66	84.49	84.23	0.14	89.4	89.4	89.5	89.5	83.71	83.85	83.71	83.63	20:23
89.4	68.4	89.9	78.8	90.1	81.2	83.58	84.65	84.53	84.25	0.14	89.4	89.4	89.6	89.5	83.80	83.93	83.78	83.68	20:24
89.4	68.3	89.8	78.8	90.1	81.1	83.59	84.66	84.49	84.25	0.14	89.3	89.3	89.5	89.4	83.85	83.95	83.82	83.72	20:25
89.3	68.4	89.9	78.7	90.0	81.3	83.53	84.63	84.54	84.25	0.13	89.3	89.3	89.5	89.4	83.76	83.87	83.86	83.66	20:26
89.3	68.3	89.8	78.8	90.1	81.1	83.56	84.54	84.49	84.22	0.13	89.4	89.3	89.5	89.5	83.70	83.81	83.89	83.61	20:27
89.2	68.3	89.8	78.7	90.0	81.2	83.56	84.61	84.53	84.23	0.13	89.4	89.5	89.6	89.5	83.72	83.85	83.84	83.66	20:28
89.3	68.3	89.8	78.8	90.1	81.1	83.55	84.62	84.53	84.23	0.12	89.5	89.5	89.5	89.5	83.76	83.85	83.73	83.68	20:29
89.3	68.3	89.8	78.8	90.1	81.1	83.55	84.64	84.51	84.23	0.12	89.3	89.3	89.5	89.4	83.67	83.77	83.65	83.56	20:30
89.3	68.4	89.8	78.8	90.1	81.1	83.53	84.64	84.51	84.24	0.12	89.4	89.4	89.5	89.4	83.70	83.78	83.58	83.58	20:31
89.3	68.4	89.9	78.7	90.0	81.1	83.57	84.60	84.49	84.22	0.11	89.3	89.4	89.6	89.4	83.74	83.84	83.74	83.62	20:32
89.2	68.3	89.8	78.7	90.0	81.1	83.55	84.60	84.51	84.22	0.11	89.4	89.4	89.5	89.4	83.80	83.89	83.78	83.68	20:33
89.4	68.3	89.9	78.8	90.1	81.2	83.55	84.64	84.53	84.24	0.10	89.3	89.5	89.6	89.5	83.80	83.88	83.76	83.67	20:34
89.3	68.3	89.9	78.7	90.0	81.3	83.57	84.61	84.54	84.24	0.10	89.4	89.5	89.6	89.5	83.71	83.85	83.84	83.66	20:35
89.3	68.3	89.9	78.8	90.0	81.3	83.54	84.64	84.54	84.24	0.10	89.4	89.5	89.5	89.5	83.74	83.86	83.74	83.63	20:36
89.4	68.4	89.8	78.9	90.1	81.2	83.56	84.65	84.54	84.25	0.09	89.3	89.3	89.5	89.4	83.70	83.82	83.82	83.62	20:37
89.2	68.3	89.8	78.7	90.1	81.1	83.57	84.61	84.49	84.22	0.09	89.3	89.4	89.5	89.4	83.73	83.82	83.71	83.62	20:38
89.4	68.3	89.9	78.8	90.0	81.2	83.56	84.65	84.51	84.24	0.08	89.3	89.4	89.5	89.4	83.81	83.91	83.81	83.68	20:39
89.2	68.4	89.8	78.7	90.1	81.1	83.56	84.62	84.50	84.23	0.08	89.3	89.5	89.5	89.4	83.80	83.91	83.80	83.70	20:40

COMMENTS _____

Tested By Cynthia L Rutledge Date 6-8-93 Reviewed By Frank A. Deiney Date 6-8-93

AMPACITY TEST. JOB NUMBER 93-0501. SAMPLE NUMBER 93-0501-02 DATA FILE 3p6gno02.002 06-07-1993

POSITION 1		POSITION 2		POSITION 3		_POSITION AVERAGES_			AVG		AMBIENT TEMPERATURE				AMPERES				
T1mx	T1mn	T2mx	T2mn	T3mx	T3mn	T1avg	T2avg	T3avg	Twave	SLOPE	Tam1	Tam2	Tam3	Taav	Ib	Iw	Ir	I'	TIME
89.3	68.3	89.8	78.7	90.1	81.1	83.55	84.61	84.50	84.22	0.07	39.3	39.4	39.5	39.4	33.98	33.97	33.85	33.77	20:41
89.3	68.3	89.8	78.8	90.1	81.1	83.55	84.61	84.50	84.22	0.07	39.4	39.3	39.5	39.4	33.83	33.93	33.80	33.71	20:42
89.3	68.4	89.9	78.5	90.1	81.1	83.57	84.55	84.50	84.24	0.05	39.3	39.3	39.5	39.4	33.88	33.99	33.85	33.75	20:43
89.4	68.4	89.9	78.8	90.0	81.3	83.57	84.68	84.55	84.26	0.06	39.4	39.4	39.5	39.4	33.83	33.96	33.85	33.75	20:44
89.3	68.4	89.9	78.7	90.0	81.2	83.58	84.61	84.54	84.24	0.06	39.3	39.4	39.5	39.4	33.82	33.96	33.81	33.71	20:45
89.3	68.3	89.8	78.7	90.1	81.1	83.57	84.63	84.53	84.25	0.06	39.4	39.3	39.5	39.4	33.92	33.94	33.82	33.74	20:46
89.3	68.4	89.8	78.7	90.1	81.1	83.60	84.64	84.53	84.25	0.05	39.3	39.4	39.5	39.4	33.90	34.03	33.89	33.79	20:47
89.4	68.4	89.9	78.8	90.0	81.3	83.61	84.65	84.56	84.27	0.05	39.3	39.4	39.5	39.4	33.80	33.91	33.79	33.65	20:48
89.3	68.4	89.9	78.7	90.0	81.2	83.60	84.63	84.55	84.26	0.05	39.3	39.3	39.5	39.4	33.82	33.94	33.83	33.69	20:49
89.3	68.3	89.9	78.8	90.0	81.3	83.59	84.65	84.59	84.27	0.05	39.3	39.3	39.5	39.4	33.93	34.06	33.92	33.79	20:50
89.3	68.4	89.9	78.8	90.1	81.1	83.61	84.66	84.55	84.27	0.05	39.3	39.4	39.5	39.4	33.92	34.01	33.86	33.77	20:51
89.4	68.4	89.9	78.9	90.1	81.3	83.62	84.68	84.57	84.29	0.05	39.3	39.4	39.5	39.4	33.83	33.92	33.79	33.67	20:52
89.4	68.4	89.8	78.9	90.2	81.2	83.61	84.69	84.56	84.29	0.05	39.3	39.4	39.5	39.4	33.71	33.78	33.75	33.60	20:53
89.3	68.4	89.8	78.7	90.1	81.2	83.60	84.64	84.54	84.26	0.05	39.3	39.3	39.5	39.4	33.77	33.84	33.71	33.61	20:54
89.4	68.4	89.9	78.9	90.1	81.3	83.59	84.68	84.58	84.28	0.05	39.3	39.4	39.5	39.4	33.75	33.82	33.80	33.62	20:55
89.3	68.4	89.8	78.7	90.1	81.1	83.59	84.64	84.53	84.25	0.05	39.3	39.3	39.5	39.4	33.85	33.90	33.77	33.68	20:56
89.3	68.4	89.8	78.8	90.2	81.1	83.63	84.66	84.56	84.28	0.05	39.3	39.3	39.5	39.3	33.86	33.94	33.79	33.69	20:57
89.3	68.4	89.9	78.7	90.1	81.2	83.63	84.65	84.56	84.28	0.06	39.3	39.4	39.5	39.4	33.79	33.89	33.74	33.62	20:58
89.3	68.4	89.9	78.8	90.1	81.3	83.62	84.66	84.61	84.30	0.06	39.3	39.4	39.5	39.4	33.88	33.97	33.78	33.65	20:59
89.3	68.4	89.8	78.8	90.2	81.1	83.60	84.66	84.54	84.27	0.06	39.3	39.4	39.5	39.4	33.84	33.90	33.74	33.67	21:00
89.3	68.4	89.8	78.8	90.1	81.1	83.61	84.64	84.52	84.25	0.05	39.3	39.4	39.5	39.4	33.86	33.90	33.75	33.67	21:01
89.3	68.4	89.9	78.7	90.1	81.1	83.62	84.66	84.56	84.28	0.06	39.3	39.3	39.5	39.4	33.70	33.83	33.77	33.69	21:02
89.4	68.4	89.9	78.8	90.2	81.1	83.63	84.68	84.57	84.29	0.06	39.3	39.2	39.5	39.3	33.75	33.88	33.69	33.59	21:03
89.4	68.4	89.9	78.9	90.2	81.3	83.62	84.70	84.60	84.31	0.07	39.3	39.3	39.5	39.4	33.69	33.83	33.74	33.58	21:04
89.3	68.4	89.9	78.7	90.1	81.3	83.57	84.63	84.58	84.25	0.07	39.3	39.3	39.5	39.3	33.75	33.87	33.67	33.59	21:05
89.3	68.4	89.8	78.6	90.1	81.1	83.52	84.65	84.53	84.26	0.07	39.3	39.2	39.5	39.3	33.60	33.70	33.64	33.47	21:06
89.3	68.4	89.9	78.8	90.1	81.3	83.58	84.64	84.60	84.27	0.07	39.3	39.3	39.5	39.3	33.66	33.75	33.66	33.47	21:07
89.3	68.4	89.8	78.8	90.1	81.1	83.61	84.65	84.54	84.27	0.07	39.3	39.3	39.5	39.4	33.74	33.84	33.65	33.56	21:08
89.3	68.4	89.8	78.7	90.1	81.1	83.60	84.65	84.55	84.27	0.06	39.3	39.3	39.5	39.4	33.73	33.82	33.66	33.59	21:09
89.4	68.4	89.9	78.6	90.1	81.3	83.61	84.68	84.60	84.30	0.07	39.3	39.4	39.5	39.4	33.77	33.84	33.69	33.59	21:10
89.3	68.4	89.8	78.8	90.1	81.1	83.61	84.64	84.51	84.25	0.07	39.3	39.4	39.5	39.4	33.78	33.85	33.70	33.63	21:11
89.3	68.4	89.8	78.8	90.2	81.1	83.59	84.64	84.55	84.26	0.06	39.3	39.4	39.5	39.4	33.77	33.85	33.68	33.62	21:12
89.3	68.4	89.8	78.8	90.1	81.1	83.60	84.64	84.54	84.26	0.06	39.4	39.3	39.5	39.4	33.73	33.82	33.77	33.62	21:13
89.4	68.4	89.9	78.8	90.0	81.2	83.61	84.64	84.55	84.27	0.06	39.3	39.3	39.5	39.4	33.69	33.79	33.68	33.58	21:14
89.3	68.4	89.9	78.7	90.0	81.2	83.61	84.62	84.55	84.26	0.06	39.4	39.3	39.5	39.4	33.69	33.82	33.75	33.59	21:15
89.3	68.4	89.9	78.7	90.0	81.2	83.58	84.62	84.54	84.25	0.06	39.3	39.3	39.5	39.4	33.79	33.89	33.69	33.62	21:16
89.3	68.4	89.8	78.8	90.1	81.1	83.60	84.64	84.55	84.26	0.05	39.3	39.3	39.5	39.3	33.76	33.85	33.69	33.65	21:17
89.4	68.4	89.9	78.9	90.1	81.3	83.61	84.67	84.59	84.29	0.05	39.3	39.3	39.5	39.4	33.76	33.88	33.69	33.61	21:18
89.4	68.4	89.8	78.8	90.2	81.1	83.59	84.66	84.54	84.26	0.05	39.4	39.4	39.6	39.5	33.72	33.84	33.68	33.61	21:19
89.4	68.4	89.9	78.8	90.1	81.3	83.60	84.67	84.60	84.29	0.05	39.3	39.4	39.6	39.4	33.76	33.90	33.75	33.64	21:20
89.3	68.4	89.8	78.8	90.1	81.1	83.62	84.63	84.54	84.25	0.05	39.3	39.4	39.5	39.4	33.72	33.84	33.65	33.61	21:21
89.3	68.4	89.8	78.7	90.1	81.1	83.59	84.63	84.54	84.25	0.05	39.3	39.3	39.6	39.4	33.74	33.84	33.66	33.60	21:22
89.3	68.4	89.8	78.8	90.1	81.1	83.59	84.64	84.52	84.25	0.04	39.5	39.4	39.6	39.5	33.74	33.85	33.64	33.63	21:23
89.3	68.4	89.8	78.8	90.1	81.1	83.61	84.62	84.53	84.25	0.04	39.4	39.4	39.5	39.5	33.59	33.68	33.55	33.51	21:24
89.4	68.4	89.9	78.8	90.1	81.3	83.60	84.65	84.58	84.28	0.04	39.4	39.4	39.6	39.4	33.78	33.82	33.69	33.61	21:25
89.3	68.4	89.8	78.7	90.1	81.2	83.60	84.64	84.55	84.27	0.04	39.3	39.4	39.6	39.4	33.78	33.90	33.78	33.63	21:26
89.4	68.4	89.9	78.9	90.1	81.3	83.61	84.68	84.60	84.29	0.04	39.3	39.4	39.6	39.4	33.89	33.95	33.82	33.72	21:27
89.3	68.4	89.8	78.7	90.1	81.2	83.63	84.66	84.56	84.28	0.04	39.3	39.4	39.6	39.4	33.91	33.96	33.84	33.76	21:28
89.3	68.4	89.9	78.7	90.1	81.2	83.59	84.65	84.57	84.27	0.04	39.4	39.4	39.6	39.5	33.90	33.93	33.82	33.74	21:29
89.4	68.4	89.8	78.9	90.2	81.2	83.60	84.68	84.58	84.29	0.04	39.4	39.4	39.6	39.5	33.82	33.89	33.75	33.69	21:30
89.3	68.4	89.8	78.8	90.1	81.1	83.61	84.65	84.56	84.27	0.04	39.4	39.5	39.7	39.5	33.95	33.96	33.83	33.77	21:31
89.4	68.4	89.9	78.9	90.1	81.3	83.61	84.69	84.63	84.31	0.04	39.4	39.4	39.6	39.4	33.92	34.04	33.88	33.75	21:32
89.4	68.4	89.8	78.9	90.2	81.1	83.64	84.58	84.57	84.30	0.04	39.4	39.5	39.6	39.5	33.95	33.95	33.94	33.79	21:33
89.5	68.4	89.9	78.9	90.1	81.3	83.64	84.70	84.61	84.32	0.04	39.4	39.5	39.6	39.4	33.92	34.00	33.87	33.75	21:34
89.4	68.4	89.8	78.6	90.1	81.1	83.55	84.67	84.54	84.28	0.04	39.3	39.3	39.6	39.4	33.82	33.92	33.69	33.72	21:35
89.3	68.5	89.9	78.8	90.2	81.1	83.65	84.67	84.59	84.30	0.04	39.4	39.4	39.6	39.4	33.92	34.00	33.86	33.76	21:36
89.3	68.4	89.9	78.7	90.1	81.2	83.64	84.68	84.61	84.31	0.04	39.4	39.4	39.5	39.4	33.87	33.95	33.94	33.77	21:37
89.3	68.4	89.9	78.8	90.1	81.2	83.64	84.69	84.62	84.32	0.04	39.4	39.4	39.6	39.5	33.96	34.01	33.88	33.81	21:38
89.4	68.4	89.9	78.8	90.1	81.3	83.64	84.69	84.65	84.33	0.05	39.4	39.4	39.6	39.5	33.95	34.00	33.88	33.79	21:39
89.3	68.4	89.9	78.8	90.1	81.3	83.64	84.68	84.63	84.32	0.05	39.4	39.4	39.6	39.5	33.91	33.97	33.86	33.77	21:40

COMMENTS _____

Tested By Cynthia L. Rutledge Date 6-8-93 Reviewed By Frank A. Devney Date 6-8-93

AMPACITY TEST. JOB NUMBER 93-0501. SAMPLE NUMBER 93-0501-03 DATA FILE 3p6gno03.003 06-08-1993

POSITION 1		POSITION 2		POSITION 3		_POSITION AVERAGES_			AVG		AMBIENT TEMPERATURE				AMPERES				
T1mx	T1mn	T2mx	T2mn	T3mx	T3mn	T1avg	T2avg	T3avg	Twave	SLOPE	Tam1	Tam2	Tam3	Taav	Ib	Iw	Ir	I'	TIME
[illegible]	76.7	90.5	78.4	87.5	78.9	84.38	84.60	83.00	83.99	-0.08	39.7	40.0	40.0	39.9	31.76	31.75	31.88	31.64	22:00
89.1	76.8	90.5	78.5	87.5	78.7	84.39	84.63	82.98	84.00	-0.07	39.7	40.0	40.0	39.9	31.76	31.81	32.06	31.72	22:01
89.1	76.7	90.5	78.4	87.5	78.9	84.38	84.61	83.00	84.00	-0.06	39.7	40.0	40.0	39.9	31.83	31.89	31.98	31.74	22:02
89.1	76.7	90.5	78.5	87.5	78.8	84.36	84.62	83.00	83.99	-0.06	39.7	40.0	40.1	39.9	31.76	31.85	32.02	31.73	22:03
89.0	76.7	90.4	78.3	87.4	78.8	84.35	84.55	82.96	83.95	-0.06	39.7	40.0	40.0	39.9	31.85	31.93	32.01	31.78	22:04
89.1	76.8	90.4	78.5	87.4	78.7	84.37	84.61	82.98	83.99	-0.05	39.7	40.0	40.0	39.9	31.86	31.92	32.00	31.77	22:05
89.0	76.8	90.4	78.3	87.4	78.8	84.37	84.56	82.97	83.97	-0.05	39.7	40.0	40.0	39.9	31.93	31.96	32.06	31.83	22:06
89.1	76.8	90.5	78.5	87.4	78.7	84.39	84.62	82.97	83.99	-0.05	39.7	40.0	40.0	39.9	31.82	31.88	31.97	31.74	22:07
89.1	76.7	90.5	78.4	87.5	78.8	84.35	84.60	82.99	83.98	-0.05	39.7	39.9	40.0	39.9	31.85	31.90	32.02	31.75	22:08
89.1	76.8	90.4	78.4	87.4	78.7	84.34	84.58	82.93	83.95	-0.05	39.7	40.0	40.0	39.9	31.82	31.89	32.02	31.77	22:09
89.0	76.7	90.4	78.3	87.4	78.8	84.36	84.54	82.94	83.95	-0.05	39.6	39.9	40.0	39.9	31.78	31.84	32.09	31.74	22:10
89.0	76.7	90.5	78.3	87.4	78.8	84.34	84.57	82.97	83.96	-0.05	39.7	39.9	40.0	39.9	31.86	31.93	32.06	31.77	22:11
89.0	76.7	90.5	78.3	87.4	78.8	84.35	84.54	82.96	83.95	-0.05	39.6	40.0	40.0	39.9	31.82	31.91	32.14	31.79	22:12
89.0	76.7	90.4	78.3	87.4	78.8	84.35	84.54	82.94	83.95	-0.05	39.7	40.0	40.0	39.9	31.89	31.90	32.01	31.78	22:13
89.1	76.7	90.5	78.4	87.5	78.8	84.38	84.60	82.96	83.98	-0.04	39.7	39.9	39.9	39.8	31.90	31.91	32.04	31.77	22:14
89.0	76.7	90.5	78.3	87.4	78.8	84.36	84.55	82.93	83.95	-0.04	39.6	39.9	39.9	39.8	31.90	31.91	32.01	31.76	22:15
89.1	76.7	90.4	78.5	87.4	78.7	84.35	84.59	82.96	83.97	-0.05	39.7	39.9	40.0	39.8	31.85	31.84	31.95	31.72	22:16
89.1	76.7	90.4	78.5	87.4	78.7	84.37	84.59	82.96	83.97	-0.05	39.7	39.9	39.9	39.8	31.89	31.88	32.00	31.76	22:17
89.0	76.7	90.4	78.3	87.3	78.8	84.34	84.53	82.94	83.94	-0.05	39.6	39.9	39.9	39.8	31.91	31.89	32.08	31.79	22:18
89.0	76.7	90.4	78.3	87.3	78.8	84.36	84.54	82.95	83.95	-0.05	39.6	39.9	40.0	39.8	31.94	31.91	32.10	31.81	22:19
89.1	76.7	90.5	78.4	87.5	78.8	84.34	84.59	82.96	83.96	-0.05	39.7	39.9	39.9	39.8	31.94	31.94	32.11	31.82	22:20
89.1	76.7	90.5	78.5	87.5	78.8	84.36	84.60	82.96	83.97	-0.04	39.6	39.9	40.0	39.8	31.92	31.90	32.16	31.82	22:21
89.1	76.7	90.5	78.4	87.4	78.8	84.37	84.58	82.95	83.97	-0.04	39.6	39.9	40.0	39.8	31.97	31.95	32.05	31.80	22:22
89.1	76.7	90.5	78.5	87.5	78.8	84.34	84.60	82.96	83.97	-0.04	39.6	39.9	40.0	39.8	31.87	31.91	32.08	31.78	22:23
89.1	76.7	90.5	78.4	87.5	78.8	84.36	84.59	82.97	83.97	-0.04	39.6	39.9	39.9	39.8	31.93	31.95	32.01	31.77	22:24
89.1	76.8	90.4	78.4	87.4	78.7	84.36	84.58	82.94	83.96	-0.04	39.6	39.9	40.0	39.8	31.84	31.84	31.94	31.70	22:25
89.0	76.7	90.4	78.3	87.3	78.7	84.31	84.51	82.92	83.92	-0.05	39.6	39.9	39.9	39.8	31.80	31.79	31.90	31.67	22:26
89.0	76.7	90.4	78.3	87.3	78.7	84.32	84.51	82.91	83.92	-0.05	39.6	39.9	39.9	39.8	31.85	31.82	31.98	31.71	22:27
89.0	76.7	90.5	78.4	87.5	78.8	84.34	84.57	82.95	83.96	-0.05	39.6	39.9	39.9	39.8	31.86	31.86	31.99	31.70	22:28
89.0	76.7	90.4	78.3	87.4	78.8	84.34	84.54	82.94	83.94	-0.05	39.6	39.9	40.0	39.8	31.90	31.90	32.01	31.76	22:29
89.0	76.7	90.4	78.3	87.3	78.7	84.31	84.51	82.89	83.90	-0.06	39.6	39.9	40.0	39.8	31.94	31.92	32.11	31.82	22:30
89.0	76.7	90.4	78.3	87.3	78.7	84.32	84.52	82.94	83.93	-0.06	39.6	39.9	39.9	39.8	31.83	31.82	32.00	31.72	22:31
[illegible]	76.7	90.4	78.3	87.3	78.7	84.31	84.51	82.91	83.91	-0.06	39.6	39.9	39.9	39.8	31.77	31.75	32.07	31.70	22:32
[illegible]	76.7	90.4	78.4	87.4	78.7	84.34	84.58	82.92	83.95	-0.06	39.6	39.8	40.0	39.8	31.87	31.83	32.02	31.73	22:33
89.0	76.7	90.4	78.3	87.3	78.7	84.33	84.53	82.92	83.93	-0.07	39.5	39.8	39.9	39.8	31.86	31.86	32.15	31.78	22:34
89.1	76.7	90.4	78.4	87.4	78.7	84.32	84.56	82.90	83.92	-0.07	39.6	39.8	39.9	39.8	31.92	31.90	32.08	31.79	22:35
89.1	76.7	90.4	78.4	87.4	78.7	84.34	84.56	82.89	83.93	-0.07	39.5	39.8	39.9	39.8	31.96	31.94	32.12	31.82	22:36
89.1	76.7	90.4	78.4	87.4	78.7	84.32	84.56	82.93	83.93	-0.07	39.6	39.8	39.9	39.8	31.96	31.94	32.14	31.83	22:37
89.1	76.7	90.4	78.4	87.4	78.7	84.33	84.57	82.93	83.94	-0.07	39.5	39.8	39.9	39.8	31.99	31.96	32.18	31.85	22:38
89.0	76.7	90.4	78.3	87.3	78.7	84.32	84.51	82.93	83.92	-0.07	39.5	39.8	39.8	39.7	31.80	31.85	31.99	31.69	22:39
89.0	76.6	90.4	78.4	87.4	78.7	84.30	84.55	82.93	83.93	-0.07	39.6	39.8	39.8	39.7	31.80	31.89	32.02	31.71	22:40
89.0	76.7	90.3	78.3	87.3	78.7	84.31	84.50	82.89	83.90	-0.08	39.6	39.8	39.9	39.8	31.78	31.91	32.12	31.77	22:41
89.0	76.7	90.3	78.3	87.3	78.7	84.31	84.50	82.89	83.90	-0.08	39.5	39.8	39.9	39.7	31.77	31.86	31.98	31.69	22:42
89.0	76.7	90.3	78.3	87.3	78.6	84.30	84.50	82.87	83.89	-0.09	39.6	39.8	39.9	39.8	31.73	31.87	32.05	31.72	22:43
89.0	76.7	90.4	78.4	87.4	78.7	84.29	84.54	82.90	83.91	-0.09	39.6	39.8	39.8	39.7	31.81	31.92	32.02	31.74	22:44
89.1	76.7	90.4	78.4	87.4	78.7	84.32	84.54	82.88	83.91	-0.09	39.5	39.8	39.9	39.7	31.81	31.92	32.01	31.73	22:45
89.0	76.6	90.4	78.4	87.4	78.7	84.29	84.54	82.89	83.91	-0.10	39.5	39.8	39.9	39.7	31.78	31.85	31.96	31.67	22:46
89.1	76.7	90.4	78.4	87.3	78.6	84.32	84.54	82.89	83.91	-0.10	39.5	39.8	39.8	39.7	31.80	31.90	31.99	31.71	22:47
89.0	76.7	90.3	78.2	87.2	78.6	84.29	84.46	82.85	83.87	-0.11	39.5	39.8	39.8	39.7	31.66	31.68	31.74	31.51	22:48
89.0	76.6	90.4	78.3	87.4	78.8	84.29	84.50	82.90	83.89	-0.11	39.5	39.8	39.8	39.7	31.80	31.85	31.96	31.67	22:49
89.0	76.7	90.3	78.3	87.3	78.6	84.28	84.48	82.86	83.87	-0.11	39.5	39.8	39.9	39.7	31.82	31.84	31.95	31.70	22:50
89.0	76.6	90.4	78.3	87.4	78.8	84.26	84.52	82.91	83.89	-0.11	39.5	39.8	39.8	39.7	31.86	31.91	31.98	31.72	22:51
89.1	76.7	90.4	78.4	87.4	78.6	84.30	84.53	82.86	83.90	-0.11	39.5	39.8	39.8	39.7	31.76	31.80	32.00	31.66	22:52
89.0	76.7	90.3	78.4	87.3	78.6	84.27	84.49	82.85	83.87	-0.12	39.5	39.8	39.8	39.7	31.88	31.92	32.01	31.76	22:53
89.0	76.6	90.4	78.3	87.4	78.7	84.28	84.52	82.89	83.90	-0.11	39.5	39.8	39.8	39.7	31.87	31.91	32.13	31.76	22:54
89.0	76.6	90.4	78.2	87.3	78.7	84.30	84.48	82.88	83.88	-0.11	39.5	39.8	39.9	39.7	31.96	31.98	32.10	31.82	22:55
88.9	76.6	90.4	78.2	87.3	78.7	84.29	84.47	82.89	83.88	-0.12	39.5	39.8	39.8	39.7	31.92	31.95	32.05	31.78	22:56
89.0	76.6	90.4	78.3	87.4	78.8	84.28	84.51	82.90	83.90	-0.11	39.5	39.8	39.8	39.7	31.87	31.91	32.02	31.73	22:57
89.0	76.6	90.4	78.3	87.4	78.7	84.27	84.52	82.88	83.89	-0.11	39.5	39.8	39.8	39.7	31.70	31.81	31.96	31.62	22:58
88.9	76.7	90.3	78.3	87.3	78.6	84.26	84.46	82.85	83.86	-0.11	39.5	39.8	39.8	39.7	31.88	31.94	32.07	31.79	22:59

COMMENTS _____

Tested By C L Rutledge Date 6-9-93 Reviewed By Frank A. Denney Date 6-9-93

AMPACITY TEST. JOB NUMBER 93-0501. SAMPLE NUMBER 93-0501-03 DATA FILE 3p6gno03.003 06-08-1993

POSITION 1		POSITION 2		POSITION 3		_POSITION AVERAGES_			AVG		AMBIENT TEMPERATURE				AMPERES				
T1mx	T1mn	T2mx	T2mn	T3mx	T3mn	T1avg	T2avg	T3avg	Twave	SLOPE	Tam1	Tam2	Tam3	Taav	Ib	Iw	Ir	I'	TIME
[illegible]	76.6	90.4	78.3	87.4	78.8	84.27	84.53	82.91	83.90	-0.11	39.5	39.7	39.8	39.7	31.85	31.92	32.05	31.72	23:00
88.9	76.6	90.4	78.3	87.3	78.7	84.29	84.50	82.88	83.89	-0.11	39.5	39.7	39.8	39.7	31.88	31.96	32.10	31.77	23:01
89.0	76.6	90.4	78.3	87.4	78.7	84.28	84.52	82.88	83.89	-0.11	39.5	39.7	39.8	39.7	31.87	31.95	32.09	31.75	23:02
89.0	76.6	90.4	78.4	87.4	78.8	84.29	84.54	82.91	83.91	-0.10	39.5	39.7	39.8	39.7	31.88	31.97	32.14	31.78	23:03
89.0	76.7	90.3	78.3	87.3	78.6	84.31	84.47	82.86	83.88	-0.10	39.5	39.7	39.6	39.7	31.94	32.02	32.08	31.83	23:04
89.0	76.7	90.4	78.4	87.4	78.7	84.31	84.54	82.88	83.91	-0.10	39.4	39.7	39.7	39.6	31.83	31.90	32.08	31.71	23:05
89.0	76.6	90.4	78.4	87.4	78.7	84.30	84.54	82.88	83.91	-0.10	39.5	39.8	39.8	39.7	31.78	31.84	31.95	31.63	23:06
89.0	76.7	90.3	78.3	87.3	78.6	84.27	84.46	82.84	83.86	-0.10	39.5	39.7	39.8	39.7	31.78	31.82	32.06	31.70	23:07
89.0	76.6	90.4	78.3	87.4	78.7	84.27	84.52	82.87	83.88	-0.09	39.5	39.8	39.8	39.7	31.87	31.90	32.01	31.71	23:08
89.0	76.6	90.4	78.4	87.4	78.7	84.30	84.52	82.88	83.90	-0.09	39.4	39.7	39.7	39.6	31.89	31.90	32.02	31.71	23:09
88.9	76.6	90.4	78.3	87.3	78.8	84.26	84.49	82.89	83.88	-0.09	39.4	39.7	39.8	39.6	31.90	31.88	31.99	31.70	23:10
88.9	76.6	90.4	78.3	87.3	78.7	84.23	84.48	82.88	83.86	-0.10	39.4	39.7	39.8	39.6	31.92	31.90	32.00	31.73	23:11
89.0	76.7	90.4	78.4	87.3	78.7	84.28	84.51	82.84	83.88	-0.10	39.4	39.7	39.8	39.6	31.89	31.90	31.98	31.71	23:12
89.0	76.6	90.4	78.4	87.4	78.7	84.28	84.52	82.86	83.89	-0.10	39.4	39.7	39.7	39.6	31.93	31.96	32.04	31.75	23:13
88.9	76.6	90.4	78.3	87.3	78.8	84.26	84.47	82.90	83.88	-0.09	39.4	39.7	39.7	39.6	31.89	31.91	32.12	31.75	23:14
89.0	76.7	90.3	78.3	87.3	78.7	84.28	84.46	82.85	83.86	-0.09	39.4	39.7	39.7	39.6	31.88	31.87	32.04	31.74	23:15
89.0	76.7	90.3	78.3	87.3	78.6	84.29	84.45	82.84	83.86	-0.09	39.5	39.7	39.7	39.7	31.80	31.80	32.07	31.71	23:16
88.9	76.7	90.3	78.2	87.3	78.7	84.27	84.44	82.87	83.86	-0.09	39.4	39.7	39.7	39.6	31.94	31.93	32.05	31.76	23:17
89.0	76.7	90.3	78.4	87.3	78.6	84.27	84.50	82.82	83.86	-0.09	39.4	39.7	39.7	39.6	31.84	31.88	32.16	31.75	23:18
89.0	76.6	90.3	78.3	87.3	78.6	84.26	84.49	82.81	83.85	-0.09	39.4	39.7	39.7	39.6	31.94	31.97	32.12	31.79	23:19
89.0	76.7	90.3	78.3	87.3	78.6	84.28	84.47	82.83	83.86	-0.09	39.4	39.7	39.7	39.6	31.93	32.01	32.12	31.82	23:20
89.0	76.6	90.3	78.4	87.3	78.6	84.24	84.50	82.85	83.86	-0.09	39.5	39.7	39.7	39.6	31.87	31.95	32.04	31.75	23:21
89.0	76.6	90.3	78.4	87.3	78.7	84.26	84.50	82.84	83.87	-0.09	39.4	39.7	39.8	39.6	31.89	31.92	32.07	31.75	23:22
88.9	76.6	90.4	78.2	87.3	78.7	84.27	84.46	82.87	83.87	-0.08	39.4	39.7	39.7	39.6	31.88	31.92	32.06	31.73	23:23
88.9	76.6	90.3	78.2	87.3	78.7	84.24	84.43	82.85	83.84	-0.08	39.4	39.7	39.7	39.6	31.94	31.96	32.10	31.79	23:24
88.9	76.6	90.3	78.2	87.3	78.7	84.23	84.45	82.86	83.85	-0.08	39.4	39.7	39.7	39.6	31.98	32.02	32.13	31.83	23:25
89.0	76.6	90.3	78.4	87.3	78.6	84.25	84.49	82.84	83.86	-0.08	39.5	39.7	39.7	39.6	31.98	31.96	32.08	31.80	23:26
89.0	76.7	90.3	78.2	87.2	78.6	84.27	84.45	82.82	83.85	-0.08	39.4	39.7	39.7	39.6	31.95	31.95	32.18	31.81	23:27
88.9	76.6	90.3	78.3	87.3	78.6	84.24	84.45	82.85	83.85	-0.08	39.4	39.7	39.7	39.6	31.86	31.92	32.07	31.73	23:28
88.9	76.6	90.4	78.2	87.3	78.7	84.24	84.45	82.84	83.85	-0.08	39.4	39.7	39.7	39.6	31.77	31.84	32.08	31.67	23:29
88.9	76.6	90.4	78.3	87.3	78.7	84.25	84.47	82.87	83.86	-0.08	39.4	39.7	39.7	39.6	31.87	31.92	32.06	31.72	23:30
88.9	76.7	90.3	78.3	87.2	78.6	84.22	84.44	82.82	83.83	-0.08	39.4	39.7	39.7	39.6	31.96	32.02	32.15	31.85	23:31
89.0	76.7	90.3	78.2	87.2	78.6	84.26	84.44	82.82	83.84	-0.08	39.4	39.7	39.7	39.6	31.84	31.90	32.05	31.72	23:32
[illegible]	76.6	90.3	78.3	87.3	78.6	84.24	84.49	82.85	83.86	-0.08	39.4	39.6	39.7	39.6	31.72	31.76	31.92	31.57	23:33
[illegible]	76.5	90.4	78.3	87.4	78.7	84.22	84.48	82.85	83.85	-0.08	39.4	39.6	39.7	39.6	31.65	31.66	31.80	31.47	23:34
88.9	76.5	90.4	78.2	87.3	78.7	84.22	84.46	82.85	83.84	-0.08	39.4	39.6	39.7	39.6	31.68	31.72	31.82	31.50	23:35
89.0	76.6	90.3	78.3	87.3	78.6	84.25	84.46	82.79	83.83	-0.08	39.3	39.6	39.7	39.5	31.75	31.80	31.89	31.60	23:36
89.0	76.6	90.3	78.3	87.3	78.6	84.24	84.45	82.80	83.83	-0.08	39.4	39.6	39.6	39.5	31.75	31.80	31.90	31.59	23:37
88.9	76.6	90.3	78.2	87.2	78.6	84.22	84.40	82.80	83.81	-0.08	39.3	39.6	39.6	39.5	31.72	31.73	31.98	31.58	23:38
88.9	76.5	90.3	78.2	87.3	78.7	84.20	84.41	82.81	83.81	-0.08	39.3	39.6	39.7	39.5	31.80	31.81	31.93	31.61	23:39
88.9	76.5	90.3	78.2	87.3	78.7	84.19	84.41	82.80	83.80	-0.08	39.4	39.6	39.7	39.5	31.78	31.80	32.08	31.66	23:40
88.8	76.5	90.3	78.2	87.3	78.7	84.17	84.40	82.80	83.79	-0.09	39.3	39.6	39.7	39.5	31.88	31.91	32.06	31.72	23:41
88.9	76.5	90.3	78.3	87.3	78.6	84.20	84.45	82.79	83.81	-0.09	39.3	39.6	39.6	39.5	31.89	31.94	32.11	31.74	23:42
88.9	76.5	90.3	78.3	87.3	78.7	84.19	84.45	82.81	83.82	-0.09	39.3	39.6	39.6	39.5	31.88	31.95	32.09	31.73	23:43
88.9	76.6	90.2	78.2	87.2	78.5	84.19	84.40	82.78	83.79	-0.09	39.3	39.6	39.7	39.6	31.85	31.90	32.04	31.73	23:44
88.9	76.6	90.2	78.3	87.2	78.5	84.18	84.42	82.78	83.80	-0.10	39.3	39.6	39.6	39.5	31.87	31.93	32.08	31.74	23:45
88.9	76.6	90.2	78.2	87.2	78.5	84.20	84.37	82.75	83.77	-0.10	39.3	39.6	39.6	39.5	31.82	31.88	32.03	31.69	23:46
88.8	76.6	90.2	78.1	87.2	78.6	84.17	84.37	82.75	83.76	-0.10	39.3	39.6	39.6	39.5	31.81	31.84	32.02	31.67	23:47
88.8	76.6	90.3	78.1	87.2	78.6	84.16	84.36	82.78	83.77	-0.11	39.3	39.6	39.6	39.5	31.83	31.88	32.01	31.67	23:48
88.9	76.6	90.3	78.3	87.3	78.5	84.19	84.42	82.74	83.79	-0.11	39.3	39.6	39.6	39.5	31.76	31.79	32.06	31.64	23:49
88.8	76.5	90.3	78.2	87.2	78.6	84.17	84.38	82.79	83.78	-0.12	39.3	39.5	39.6	39.5	31.91	31.93	32.10	31.74	23:50
88.9	76.6	90.3	78.3	87.2	78.5	84.17	84.41	82.75	83.78	-0.12	39.3	39.6	39.6	39.5	31.86	31.88	32.15	31.73	23:51
88.8	76.6	90.3	78.1	87.2	78.6	84.18	84.37	82.75	83.77	-0.13	39.3	39.5	39.6	39.5	31.94	31.98	32.10	31.77	23:52
88.9	76.5	90.3	78.3	87.3	78.6	84.19	84.44	82.78	83.81	-0.13	39.3	39.5	39.6	39.5	31.91	31.94	32.08	31.73	23:53
89.0	76.6	90.3	78.3	87.3	78.5	84.22	84.43	82.76	83.80	-0.13	39.3	39.5	39.6	39.5	31.90	31.94	32.11	31.74	23:54
88.8	76.6	90.2	78.2	87.2	78.6	84.19	84.37	82.75	83.77	-0.13	39.3	39.5	39.6	39.5	31.91	31.96	32.06	31.75	23:55
88.9	76.6	90.2	78.3	87.2	78.5	84.20	84.40	82.75	83.78	-0.13	39.3	39.5	39.5	39.5	31.95	32.00	32.09	31.78	23:56
88.8	76.5	90.3	78.2	87.3	78.6	84.19	84.42	82.80	83.80	-0.13	39.3	39.5	39.5	39.5	31.93	31.96	32.06	31.72	23:57
88.9	76.6	90.2	78.2	87.2	78.5	84.18	84.36	82.77	83.77	-0.13	39.2	39.5	39.6	39.4	31.98	32.00	32.14	31.80	23:58
88.9	76.6	90.3	78.2	87.2	78.6	84.19	84.38	82.79	83.78	-0.14	39.3	39.5	39.5	39.4	31.95	31.92	32.05	31.73	23:59

COMMENTS _____

Tested By C L Rutledge Date 6-9-93 Reviewed By Frank A. Denney Date 6-9-93

AMPACITY TEST. JOB NUMBER 93-0501. SAMPLE NUMBER 93-0501-03 DATA FILE 3p6gno03.003 06-08-1993

POSITION 1		POSITION 2		POSITION 3		POSITION AVERAGES			AVG		AMBIENT TEMPERATURE				AMPERES				
T1mx	T1mn	T2mx	T2mn	T3mx	T3mn	T1avg	T2avg	T3avg	Twave	SLOPE	Tam1	Tam2	Tam3	Taav	Ib	Iw	Ir	I'	TIME
88.[illegible]	76.6	90.2	78.2	87.2	78.6	84.14	84.37	82.79	83.77	-0.14	39.3	39.5	39.6	39.5	31.81	31.78	32.03	31.65	00:00
88.9	76.6	90.2	78.2	87.2	78.5	84.15	84.38	82.76	83.76	-0.14	39.3	39.5	39.5	39.5	31.96	31.93	32.07	31.76	00:01
88.9	76.6	90.2	78.2	87.2	78.5	84.19	84.38	82.76	83.78	-0.14	39.3	39.5	39.5	39.4	31.92	31.91	32.15	31.75	00:02
88.9	76.5	90.3	78.2	87.3	78.6	84.19	84.42	82.79	83.80	-0.13	39.2	39.5	39.5	39.4	31.88	31.95	31.98	31.67	00:03
88.9	76.5	90.3	78.3	87.3	78.5	84.17	84.43	82.76	83.79	-0.13	39.2	39.5	39.5	39.4	31.82	31.94	32.07	31.70	00:04
88.9	76.5	90.3	78.3	87.3	78.6	84.17	84.42	82.76	83.79	-0.13	39.2	39.4	39.5	39.4	31.88	32.01	32.04	31.69	00:05
88.9	76.5	90.3	78.3	87.3	78.6	84.18	84.45	82.77	83.80	-0.12	39.2	39.5	39.5	39.4	31.94	32.07	32.05	31.76	00:06
88.8	76.6	90.3	78.1	87.2	78.6	84.19	84.38	82.77	83.78	-0.12	39.3	39.5	39.6	39.4	31.99	32.11	32.08	31.81	00:07
88.8	76.6	90.3	78.2	87.3	78.6	84.16	84.40	82.79	83.78	-0.12	39.2	39.5	39.5	39.4	31.92	31.96	32.01	31.70	00:08
88.9	76.6	90.2	78.2	87.2	78.5	84.18	84.39	82.76	83.78	-0.12	39.3	39.5	39.5	39.4	31.98	32.02	32.09	31.78	00:09
88.9	76.6	90.3	78.3	87.3	78.5	84.18	84.43	82.78	83.79	-0.11	39.2	39.5	39.5	39.4	31.91	31.95	32.03	31.70	00:10
88.8	76.5	90.2	78.2	87.2	78.5	84.16	84.36	82.71	83.75	-0.12	39.2	39.5	39.5	39.4	31.89	31.93	32.05	31.71	00:11
88.8	76.5	90.3	78.2	87.3	78.6	84.18	84.42	82.79	83.79	-0.11	39.2	39.5	39.5	39.4	31.93	31.96	32.07	31.71	00:12
88.9	76.6	90.2	78.2	87.2	78.5	84.16	84.37	82.75	83.76	-0.11	39.2	39.5	39.5	39.4	31.88	31.92	32.15	31.74	00:13
88.8	76.5	90.3	78.2	87.3	78.7	84.17	84.40	82.81	83.79	-0.11	39.2	39.5	39.5	39.4	31.98	32.02	32.12	31.77	00:14
88.8	76.6	90.2	78.2	87.2	78.5	84.18	84.37	82.75	83.77	-0.10	39.2	39.5	39.5	39.4	31.91	31.94	32.16	31.75	00:15
88.9	76.5	90.2	78.1	87.2	78.6	84.19	84.39	82.75	83.77	-0.10	39.2	39.4	39.5	39.3	31.97	32.08	32.09	31.78	00:16
88.9	76.5	90.3	78.2	87.3	78.6	84.18	84.41	82.79	83.80	-0.10	39.2	39.4	39.5	39.4	31.80	31.90	32.16	31.67	00:17
88.9	76.5	90.3	78.3	87.3	78.6	84.16	84.42	82.78	83.78	-0.10	39.2	39.4	39.5	39.4	31.84	31.94	32.08	31.68	00:18
88.9	76.5	90.3	78.3	87.2	78.5	84.18	84.41	82.76	83.78	-0.09	39.2	39.4	39.5	39.4	31.80	31.88	31.99	31.62	00:19
88.8	76.5	90.3	78.1	87.2	78.6	84.15	84.36	82.76	83.76	-0.09	39.2	39.4	39.5	39.4	31.74	31.81	31.94	31.55	00:20
88.9	76.5	90.3	78.2	87.2	78.6	84.14	84.36	82.76	83.75	-0.09	39.2	39.4	39.5	39.4	31.80	31.87	31.99	31.62	00:21
88.8	76.5	90.2	78.1	87.1	78.5	84.12	84.32	82.72	83.72	-0.09	39.2	39.4	39.5	39.4	31.78	31.84	31.96	31.61	00:22
88.9	76.5	90.2	78.2	87.2	78.4	84.15	84.35	82.70	83.73	-0.09	39.2	39.5	39.5	39.4	31.78	31.85	31.97	31.62	00:23
88.8	76.5	90.2	78.1	87.2	78.5	84.15	84.35	82.72	83.74	-0.09	39.2	39.4	39.4	39.3	31.79	31.88	31.99	31.62	00:24
88.8	76.5	90.2	78.1	87.1	78.5	84.13	84.32	82.72	83.72	-0.09	39.1	39.4	39.5	39.3	31.74	31.79	31.92	31.56	00:25
88.8	76.5	90.2	78.2	87.1	78.4	84.13	84.36	82.72	83.73	-0.09	39.2	39.4	39.4	39.3	31.65	31.71	31.94	31.51	00:26
88.9	76.5	90.2	78.2	87.2	78.5	84.13	84.36	82.73	83.74	-0.09	39.2	39.4	39.5	39.3	31.74	31.80	31.93	31.56	00:27
88.8	76.4	90.3	78.1	87.2	78.6	84.11	84.34	82.73	83.73	-0.09	39.2	39.4	39.5	39.4	31.65	31.75	31.99	31.53	00:28
88.8	76.4	90.3	78.1	87.2	78.6	84.11	84.34	82.73	83.73	-0.09	39.2	39.4	39.4	39.3	31.77	31.87	31.99	31.59	00:29
88.8	76.5	90.2	78.1	87.1	78.5	84.08	84.29	82.71	83.70	-0.09	39.2	39.4	39.4	39.3	31.71	31.83	32.05	31.59	00:30
88.8	76.5	90.2	78.1	87.1	78.5	84.07	84.29	82.70	83.69	-0.10	39.1	39.4	39.4	39.3	31.80	31.91	31.99	31.64	00:31
88.8	76.5	90.2	78.1	87.1	78.5	84.09	84.28	82.68	83.68	-0.10	39.2	39.4	39.4	39.3	31.81	31.94	32.02	31.66	00:32
88.[illegible]	76.4	90.2	78.2	87.2	78.5	84.09	84.36	82.71	83.72	-0.10	39.2	39.4	39.4	39.3	31.82	31.92	32.02	31.65	00:33
88.[illegible]	76.4	90.2	78.0	87.1	78.5	84.05	84.29	82.70	83.68	-0.10	39.1	39.4	39.4	39.3	31.83	31.94	32.04	31.66	00:34
88.8	76.5	90.2	78.0	87.1	78.5	84.07	84.27	82.70	83.68	-0.10	39.1	39.4	39.4	39.3	31.89	31.98	32.10	31.74	00:35
88.8	76.5	90.1	78.1	87.1	78.4	84.06	84.28	82.68	83.67	-0.10	39.1	39.4	39.4	39.3	31.89	32.00	32.10	31.74	00:36
88.8	76.4	90.2	78.1	87.1	78.5	84.09	84.29	82.67	83.68	-0.11	39.1	39.4	39.4	39.3	31.87	31.94	32.06	31.68	00:37
88.8	76.4	90.2	78.1	87.2	78.5	84.10	84.34	82.67	83.70	-0.11	39.1	39.4	39.4	39.3	31.88	31.94	32.08	31.68	00:38
88.8	76.5	90.2	78.2	87.2	78.5	84.07	84.31	82.68	83.69	-0.11	39.1	39.3	39.4	39.3	31.91	31.91	32.03	31.66	00:39
88.8	76.4	90.2	78.2	87.2	78.6	84.10	84.35	82.72	83.72	-0.11	39.1	39.4	39.4	39.3	31.90	31.92	32.03	31.67	00:40
88.8	76.4	90.2	78.2	87.2	78.5	84.10	84.34	82.71	83.72	-0.11	39.1	39.3	39.3	39.3	31.82	31.83	32.05	31.60	00:41
88.8	76.5	90.2	78.1	87.2	78.6	84.06	84.29	82.70	83.69	-0.11	39.1	39.3	39.4	39.3	31.93	31.94	32.06	31.69	00:42
88.7	76.4	90.2	78.2	87.1	78.4	84.06	84.33	82.68	83.70	-0.11	39.1	39.3	39.4	39.3	31.82	31.83	32.08	31.64	00:43
88.8	76.4	90.2	78.2	87.2	78.5	84.07	84.32	82.68	83.69	-0.11	39.1	39.3	39.4	39.3	31.88	31.90	32.02	31.64	00:44
88.7	76.4	90.1	78.1	87.1	78.4	84.07	84.28	82.66	83.67	-0.12	39.1	39.3	39.3	39.3	31.92	31.96	32.05	31.71	00:45
88.8	76.4	90.2	78.2	87.2	78.5	84.06	84.34	82.71	83.70	-0.12	39.1	39.3	39.4	39.3	31.88	31.92	32.01	31.65	00:46
88.8	76.4	90.2	78.1	87.1	78.4	84.09	84.32	82.64	83.68	-0.13	39.1	39.3	39.4	39.3	31.88	31.91	31.99	31.64	00:47
88.8	76.4	90.1	78.0	87.1	78.5	84.11	84.29	82.67	83.69	-0.13	39.1	39.3	39.4	39.3	31.97	31.98	32.08	31.75	00:48
88.8	76.4	90.2	78.2	87.2	78.5	84.09	84.34	82.69	83.71	-0.13	39.1	39.3	39.3	39.2	32.01	32.01	32.11	31.75	00:49
88.8	76.5	90.2	78.1	87.2	78.5	84.08	84.30	82.66	83.68	-0.13	39.0	39.3	39.3	39.2	31.98	32.04	32.07	31.72	00:50
88.7	76.4	90.2	78.1	87.2	78.5	84.08	84.29	82.69	83.69	-0.13	39.1	39.3	39.3	39.2	31.96	32.05	32.07	31.73	00:51
88.7	76.5	90.1	78.1	87.1	78.5	84.08	84.29	82.69	83.69	-0.14	39.1	39.4	39.3	39.3	31.89	31.98	31.99	31.69	00:52
88.8	76.5	90.2	78.2	87.2	78.5	84.10	84.33	82.68	83.71	-0.13	39.0	39.3	39.3	39.2	31.92	32.01	32.02	31.69	00:53
88.8	76.5	90.1	78.2	87.1	78.4	84.08	84.31	82.65	83.68	-0.13	39.1	39.3	39.3	39.2	31.82	31.93	32.06	31.65	00:54
88.8	76.5	90.2	78.1	87.2	78.5	84.11	84.28	82.68	83.69	-0.13	39.0	39.3	39.3	39.2	31.83	31.88	31.95	31.59	00:55
88.7	76.4	90.2	78.1	87.2	78.5	84.07	84.29	82.68	83.68	-0.13	39.0	39.3	39.3	39.2	31.76	31.81	31.99	31.56	00:56
88.7	76.4	90.2	78.1	87.2	78.5	84.06	84.30	82.64	83.66	-0.13	39.1	39.3	39.3	39.2	31.80	31.85	31.94	31.57	00:57
88.8	76.5	90.1	78.0	87.1	78.5	84.04	84.24	82.63	83.64	-0.14	39.0	39.3	39.3	39.2	31.78	31.84	32.02	31.60	00:58
88.8	76.4	90.2	78.1	87.2	78.5	84.08	84.28	82.64	83.67	-0.14	39.0	39.3	39.3	39.2	31.92	31.93	32.04	31.66	00:59

COMMENTS _____

Tested By Cynthia L. Lutledge Date 6-9-93 Reviewed By Frank A. Devney Date 6-9-93

AMPACITY TEST. JOB NUMBER 93-0501. SAMPLE NUMBER 93-0501-04 DATA FILE 3p6gno04.001 06-03-1993

POSITION 1		POSITION 2		POSITION 3		_POSITION AVERAGES_			AVG		AMBIENT TEMPERATURE				AMPERES				
T1mx	T1mn	T2mx	T2mn	T3mx	T3mn	T1avg	T2avg	T3avg	Twave	SLOPE	Tam1	Tam2	Tam3	Taav	Ib	Iw	Ir	I'	TIME
[illegible]	81.8	90.3	79.2	87.1	75.5	85.74	84.36	82.66	84.25	0.08	39.9	40.1	40.0	40.0	32.52	32.59	32.50	32.46	19:32
89.9	81.7	90.2	79.2	87.1	75.5	85.75	84.33	82.64	84.24	0.09	39.9	40.0	40.0	40.0	32.43	32.52	32.53	32.43	19:33
89.9	81.7	90.3	79.2	87.1	75.4	85.71	84.33	82.54	84.23	0.09	39.9	40.0	40.0	40.0	32.51	32.62	32.48	32.46	19:34
89.9	81.8	90.3	79.3	87.1	75.6	85.74	84.40	82.68	84.27	0.09	39.8	40.0	39.9	39.9	32.53	32.64	32.54	32.47	19:35
89.9	81.8	90.2	79.3	87.1	75.6	85.74	84.40	82.70	84.28	0.10	39.9	40.0	40.0	40.0	32.54	32.65	32.54	32.51	19:36
89.9	81.8	90.2	79.3	87.0	75.6	85.73	84.39	82.66	84.26	0.10	39.9	40.0	40.0	40.0	32.51	32.61	32.49	32.47	19:37
89.9	81.7	90.3	79.2	87.1	75.5	85.73	84.34	82.66	84.25	0.11	39.9	40.0	40.0	40.0	32.50	32.61	32.50	32.44	19:38
89.9	81.8	90.3	79.2	87.1	75.5	85.73	84.36	82.66	84.25	0.11	39.9	40.1	40.0	40.0	32.54	32.68	32.54	32.51	19:39
89.9	81.8	90.3	79.3	87.1	75.6	85.74	84.40	82.68	84.28	0.11	39.9	40.0	39.9	40.0	32.52	32.67	32.54	32.52	19:40
89.9	81.8	90.2	79.3	87.0	75.6	85.75	84.40	82.67	84.28	0.12	39.9	40.0	40.0	40.0	32.62	32.74	32.60	32.58	19:41
89.9	81.8	90.3	79.3	87.1	75.6	85.72	84.40	82.69	84.27	0.12	40.0	40.2	40.0	40.1	32.51	32.64	32.62	32.53	19:42
89.9	81.8	90.2	79.4	87.1	75.7	85.74	84.42	82.71	84.29	0.13	39.9	40.1	40.0	40.0	32.52	32.60	32.49	32.46	19:43
89.9	81.7	90.2	79.4	87.1	75.7	85.74	84.42	82.72	84.29	0.13	39.9	40.1	40.0	40.0	32.56	32.62	32.51	32.51	19:44
89.9	81.7	90.2	79.4	87.1	75.7	85.74	84.41	82.71	84.28	0.13	39.9	40.1	40.0	40.0	32.57	32.61	32.54	32.53	19:45
89.9	81.8	90.3	79.3	87.1	75.6	85.71	84.40	82.70	84.27	0.13	39.9	40.2	40.1	40.1	32.59	32.74	32.67	32.64	19:46
90.0	81.8	90.3	79.3	87.1	75.5	85.76	84.39	82.65	84.27	0.13	39.9	40.0	40.0	40.0	32.56	32.74	32.58	32.54	19:47
90.0	81.7	90.3	79.2	87.1	75.5	85.77	84.36	82.68	84.27	0.13	39.9	40.1	40.0	40.0	32.55	32.73	32.58	32.54	19:48
89.9	81.8	90.3	79.4	87.1	75.7	85.74	84.43	82.72	84.30	0.14	39.9	40.0	40.0	40.0	32.40	32.61	32.58	32.45	19:49
89.9	81.8	90.2	79.4	87.1	75.7	85.75	84.42	82.71	84.29	0.14	39.8	40.1	40.0	40.0	32.52	32.70	32.57	32.52	19:50
89.9	81.8	90.2	79.4	87.1	75.6	85.74	84.42	82.69	84.28	0.14	39.9	40.1	40.1	40.0	32.52	32.67	32.58	32.53	19:51
89.9	81.8	90.2	79.4	87.1	75.7	85.75	84.43	82.71	84.31	0.14	39.8	40.1	40.1	40.0	32.50	32.64	32.54	32.50	19:52
89.9	81.7	90.2	79.4	87.1	75.7	85.77	84.42	82.75	84.31	0.14	39.9	40.1	40.0	40.0	32.59	32.74	32.64	32.60	19:53
89.9	81.8	90.2	79.4	87.1	75.7	85.79	84.43	82.71	84.31	0.14	39.9	40.2	40.0	40.0	32.60	32.74	32.65	32.61	19:54
90.0	81.8	90.3	79.3	87.1	75.5	85.81	84.41	82.69	84.31	0.14	39.9	40.0	40.0	40.0	32.59	32.68	32.55	32.51	19:55
89.9	81.8	90.3	79.4	87.1	75.6	85.79	84.46	82.72	84.32	0.15	39.8	40.0	40.0	39.9	32.52	32.61	32.61	32.48	19:56
89.9	81.8	90.2	79.4	87.1	75.7	85.80	84.44	82.73	84.32	0.15	39.8	40.0	40.0	40.0	32.50	32.56	32.46	32.44	19:57
89.9	81.7	90.2	79.3	87.2	75.7	85.79	84.40	82.73	84.31	0.15	39.8	40.2	40.0	40.0	32.37	32.45	32.42	32.35	19:58
90.0	81.7	90.3	79.3	87.2	75.6	85.78	84.40	82.72	84.30	0.14	39.9	40.0	40.0	40.0	32.49	32.56	32.46	32.42	19:59
90.0	81.8	90.3	79.3	87.1	75.5	85.79	84.39	82.69	84.29	0.14	39.9	40.0	40.0	40.0	32.57	32.67	32.57	32.49	20:00
90.0	81.8	90.3	79.2	87.2	75.5	85.76	84.38	82.70	84.28	0.14	39.9	40.1	40.0	40.0	32.52	32.59	32.52	32.44	20:01
90.0	81.8	90.3	79.4	87.1	75.6	85.81	84.46	82.74	84.33	0.14	39.9	40.0	40.0	40.0	32.53	32.60	32.53	32.45	20:02
90.0	81.8	90.4	79.3	87.2	75.5	85.79	84.41	82.70	84.30	0.13	39.9	40.0	40.0	40.0	32.62	32.67	32.62	32.53	20:03
89.9	81.7	90.2	79.3	87.2	75.7	85.79	84.40	82.73	84.31	0.13	39.9	40.0	40.0	40.0	32.52	32.55	32.58	32.47	20:04
[illegible]	81.8	90.2	79.4	87.1	75.7	85.79	84.44	82.73	84.32	0.13	39.8	40.0	40.0	39.9	32.49	32.54	32.67	32.49	20:05
[illegible]	81.8	90.2	79.4	87.1	75.7	85.78	84.45	82.74	84.32	0.13	39.8	40.0	40.0	39.9	32.55	32.58	32.60	32.49	20:06
89.9	81.7	90.3	79.3	87.2	75.7	85.77	84.40	82.76	84.31	0.13	39.8	40.1	40.0	40.0	32.48	32.53	32.65	32.47	20:07
90.0	81.8	90.4	79.3	87.2	75.5	85.79	84.42	82.71	84.30	0.13	39.8	40.0	40.0	39.9	32.61	32.67	32.67	32.53	20:08
90.0	81.7	90.3	79.3	87.2	75.7	85.80	84.42	82.78	84.33	0.13	39.9	40.0	40.0	40.0	32.57	32.58	32.60	32.50	20:09
89.9	81.7	90.3	79.3	87.2	75.7	85.79	84.44	82.77	84.33	0.13	39.9	40.2	40.0	40.0	32.60	32.62	32.64	32.55	20:10
90.0	81.7	90.3	79.3	87.2	75.7	85.82	84.42	82.77	84.34	0.13	39.9	40.1	40.0	40.0	32.56	32.60	32.62	32.51	20:11
90.0	81.7	90.3	79.3	87.2	75.7	85.80	84.41	82.73	84.31	0.13	39.8	40.0	39.9	39.9	32.52	32.55	32.57	32.46	20:12
89.9	81.7	90.3	79.3	87.2	75.7	85.78	84.40	82.75	84.31	0.13	39.8	40.1	40.0	40.0	32.52	32.52	32.55	32.44	20:13
90.0	81.9	90.3	79.4	87.1	75.5	85.82	84.46	82.70	84.32	0.13	39.9	40.2	40.0	40.0	32.39	32.46	32.59	32.39	20:14
90.1	81.8	90.3	79.3	87.2	75.7	85.82	84.42	82.76	84.33	0.13	39.8	39.9	40.0	39.9	32.59	32.60	32.61	32.48	20:15
89.9	81.7	90.2	79.3	87.2	75.7	85.79	84.44	82.76	84.33	0.13	39.9	39.9	40.0	39.9	32.50	32.54	32.66	32.47	20:16
90.0	81.8	90.3	79.4	87.1	75.6	85.82	84.46	82.72	84.34	0.13	39.8	39.9	39.9	39.9	32.64	32.66	32.65	32.52	20:17
90.0	81.8	90.4	79.3	87.2	75.5	85.81	84.44	82.75	84.33	0.13	39.8	40.1	40.0	40.0	32.57	32.56	32.55	32.43	20:18
90.0	81.8	90.3	79.2	87.2	75.5	85.82	84.40	82.72	84.31	0.13	39.8	40.1	40.0	39.9	32.57	32.57	32.57	32.46	20:19
89.9	81.7	90.3	79.4	87.2	75.7	85.81	84.46	82.77	84.35	0.13	39.8	40.1	40.0	40.0	32.51	32.61	32.60	32.52	20:20
90.0	81.9	90.4	79.3	87.2	75.5	85.83	84.44	82.71	84.33	0.13	39.8	40.0	40.0	39.9	32.67	32.68	32.65	32.55	20:21
89.9	81.9	90.3	79.4	87.1	75.7	85.82	84.47	82.77	84.35	0.12	39.8	39.9	40.0	39.9	32.55	32.64	32.54	32.47	20:22
90.0	81.8	90.4	79.4	87.1	75.5	85.82	84.47	82.71	84.33	0.12	39.8	39.9	40.0	39.9	32.47	32.57	32.67	32.44	20:23
90.0	81.7	90.3	79.3	87.2	75.7	85.83	84.44	82.75	84.34	0.12	39.7	40.0	39.9	39.9	32.54	32.60	32.61	32.46	20:24
90.0	81.8	90.3	79.4	87.2	75.7	85.82	84.50	82.78	84.36	0.12	39.8	39.9	40.0	39.9	32.54	32.58	32.61	32.45	20:25
90.0	81.9	90.4	79.4	87.1	75.6	85.82	84.47	82.71	84.32	0.11	39.8	39.9	40.0	39.9	32.55	32.57	32.62	32.46	20:26
90.1	81.8	90.4	79.3	87.2	75.6	85.83	84.42	82.73	84.33	0.11	39.8	39.8	39.9	39.9	32.52	32.58	32.62	32.42	20:27
90.1	81.8	90.4	79.2	87.2	75.5	85.83	84.42	82.71	84.32	0.11	39.8	40.0	39.9	39.9	32.51	32.57	32.60	32.43	20:28
90.0	81.8	90.4	79.2	87.2	75.6	85.81	84.42	82.73	84.32	0.10	39.8	40.1	40.0	40.0	32.53	32.60	32.63	32.47	20:29
90.0	81.8	90.4	79.3	87.2	75.5	85.81	84.43	82.73	84.32	0.10	39.8	40.0	40.0	39.9	32.39	32.43	32.58	32.34	20:30
90.0	81.8	90.3	79.4	87.1	75.5	85.79	84.45	82.70	84.31	0.09	39.8	40.0	39.9	39.9	32.52	32.54	32.58	32.42	20:31

COMMENTS _____

Tested By CL Rutledge Date ~~6-3-93~~ 6-4-93 CLR 6-4-93 Reviewed By Frank A. Denney Date 6-5-93

AMPACITY TEST. JOB NUMBER 93-0501. SAMPLE NUMBER 93-0501-04 DATA FILE 3p6gno04.001 06-03-1993

POSITION 1		POSITION 2		POSITION 3		POSITION AVERAGES			AVG		AMBIENT TEMPERATURE				AMPERES				
T1mx	T1mn	T2mx	T2mn	T3mx	T3mn	T1avg	T2avg	T3avg	Twave	SLOPE	Tam1	Tam2	Tam3	Taav	Ib	Iw	Ir	I'	TIME
9[illegible]	81.8	90.3	79.4	87.1	75.7	85.82	84.48	82.76	84.35	0.09	39.8	39.9	39.9	39.8	32.50	32.51	32.63	32.44	20:32
90.0	81.8	90.3	79.2	87.2	75.6	85.80	84.39	82.72	84.31	0.08	39.8	40.0	39.8	39.9	32.54	32.56	32.63	32.45	20:33
90.1	81.8	90.3	79.2	87.2	75.6	85.82	84.42	82.76	84.33	0.07	39.8	40.0	39.9	39.9	32.52	32.59	32.60	32.45	20:34
90.0	81.8	90.4	79.3	87.2	75.5	85.81	84.45	82.71	84.32	0.07	39.8	39.9	39.9	39.9	32.49	32.57	32.57	32.39	20:35
90.0	81.8	90.3	79.4	87.1	75.6	85.81	84.47	82.72	84.33	0.07	39.9	39.9	39.9	39.9	32.50	32.59	32.56	32.41	20:36
90.0	81.8	90.3	79.4	87.1	75.7	85.82	84.48	82.75	84.35	0.07	39.8	40.0	39.9	39.9	32.53	32.63	32.60	32.48	20:37
90.0	81.7	90.3	79.2	87.2	75.7	85.83	84.43	82.75	84.34	0.07	39.8	39.9	39.9	39.9	32.48	32.57	32.60	32.43	20:38
90.0	81.8	90.3	79.4	87.1	75.7	85.82	84.49	82.76	84.35	0.06	39.7	40.0	39.9	39.9	32.46	32.55	32.59	32.41	20:39
90.0	81.8	90.4	79.4	87.1	75.6	85.82	84.46	82.73	84.34	0.06	39.8	39.9	40.0	39.9	32.51	32.62	32.66	32.46	20:40
90.0	81.7	90.3	79.3	87.2	75.7	85.84	84.43	82.77	84.35	0.06	39.7	39.8	39.9	39.8	32.45	32.51	32.64	32.38	20:41
90.0	81.8	90.4	79.3	87.2	75.5	85.83	84.46	82.71	84.33	0.06	39.8	39.7	40.0	39.8	32.44	32.49	32.50	32.32	20:42
90.0	81.8	90.3	79.4	87.1	75.6	85.83	84.48	82.74	84.35	0.06	39.7	39.8	39.9	39.8	32.37	32.37	32.52	32.27	20:43
90.0	81.8	90.3	79.4	87.1	75.7	85.82	84.47	82.74	84.35	0.06	39.8	39.7	39.9	39.8	32.50	32.48	32.51	32.35	20:44
90.0	81.8	90.3	79.4	87.1	75.6	85.82	84.48	82.74	84.34	0.06	39.8	39.7	40.0	39.8	32.52	32.48	32.54	32.35	20:45
90.0	81.8	90.3	79.4	87.1	75.5	85.83	84.46	82.72	84.34	0.05	39.8	39.8	40.0	39.9	32.48	32.41	32.47	32.32	20:46
90.0	81.8	90.4	79.3	87.2	75.5	85.80	84.42	82.71	84.31	0.05	39.7	39.8	39.8	39.8	32.44	32.40	32.46	32.26	20:47
89.9	81.7	90.3	79.3	87.2	75.7	85.81	84.43	82.75	84.33	0.04	39.7	39.8	39.9	39.8	32.52	32.46	32.54	32.37	20:48
90.0	81.7	90.3	79.3	87.2	75.6	85.83	84.40	82.71	84.32	0.04	39.8	39.8	39.9	39.8	32.50	32.43	32.52	32.35	20:49
90.0	81.8	90.3	79.4	87.1	75.6	85.81	84.46	82.74	84.34	0.04	39.8	39.8	39.9	39.8	32.52	32.48	32.54	32.37	20:50
90.0	81.8	90.3	79.3	87.1	75.5	85.79	84.43	82.69	84.30	0.03	39.8	39.8	39.8	39.8	32.53	32.49	32.54	32.36	20:51
90.0	81.8	90.2	79.3	87.1	75.7	85.82	84.42	82.71	84.32	0.03	39.7	39.8	39.9	39.8	32.26	32.26	32.42	32.19	20:52
90.0	81.8	90.4	79.3	87.2	75.5	85.79	84.42	82.70	84.30	0.02	39.7	39.8	39.9	39.8	32.56	32.56	32.57	32.40	20:53
89.9	81.7	90.3	79.3	87.2	75.7	85.81	84.41	82.75	84.32	0.02	39.7	39.8	39.9	39.8	32.50	32.50	32.53	32.41	20:54
90.0	81.8	90.3	79.2	87.2	75.5	85.81	84.40	82.71	84.31	0.02	39.7	39.8	39.9	39.8	32.58	32.54	32.62	32.43	20:55
90.0	81.7	90.3	79.3	87.2	75.7	85.80	84.43	82.74	84.32	0.02	39.7	39.9	39.9	39.8	32.50	32.42	32.52	32.36	20:56
89.9	81.8	90.3	79.4	87.1	75.7	85.82	84.44	82.74	84.33	0.02	39.7	39.9	39.8	39.8	32.50	32.42	32.50	32.34	20:57
89.9	81.8	90.3	79.4	87.1	75.7	85.80	84.45	82.72	84.32	0.01	39.7	40.0	39.9	39.8	32.48	32.39	32.49	32.34	20:58
89.9	81.7	90.3	79.2	87.2	75.6	85.77	84.39	82.70	84.29	0.01	39.8	39.8	39.9	39.8	32.54	32.46	32.55	32.39	20:59
90.0	81.8	90.3	79.4	87.1	75.7	85.80	84.44	82.71	84.32	0.00	39.7	39.7	39.9	39.8	32.45	32.36	32.46	32.28	21:00
90.0	81.7	90.3	79.2	87.2	75.5	85.78	84.37	82.68	84.28	-0.01	39.7	39.7	39.9	39.8	32.41	32.37	32.45	32.26	21:01
90.0	81.8	90.3	79.4	87.1	75.6	85.78	84.43	82.70	84.30	-0.01	39.8	39.9	39.8	39.8	32.32	32.44	32.53	32.36	21:02
90.0	81.7	90.2	79.2	87.2	75.6	85.80	84.38	82.70	84.29	-0.01	39.7	39.8	39.8	39.8	32.45	32.42	32.59	32.35	21:03
90.0	81.8	90.3	79.4	87.1	75.6	85.79	84.45	82.72	84.32	-0.02	39.7	40.0	39.8	39.8	32.54	32.48	32.55	32.38	21:04
90.[illegible]	81.8	90.3	79.4	87.1	75.6	85.79	84.44	82.71	84.31	-0.02	39.7	39.9	39.8	39.8	32.44	32.40	32.57	32.34	21:05
9[illegible]	81.7	90.3	79.2	87.2	75.5	85.77	84.36	82.67	84.27	-0.02	39.6	40.0	39.8	39.8	32.48	32.46	32.48	32.34	21:06
89.9	81.7	90.2	79.3	87.2	75.7	85.78	84.42	82.71	84.31	-0.03	39.7	40.0	39.9	39.9	32.49	32.47	32.48	32.37	21:07
89.9	81.6	90.3	79.4	87.1	75.5	85.75	84.42	82.66	84.29	-0.03	39.8	40.0	39.9	39.9	32.51	32.50	32.53	32.40	21:08
90.0	81.7	90.3	79.2	87.2	75.5	85.75	84.34	82.66	84.25	-0.04	39.7	39.9	39.9	39.8	32.53	32.55	32.56	32.41	21:09
89.9	81.7	90.2	79.3	87.1	75.7	85.76	84.39	82.70	84.28	-0.04	39.7	39.8	39.8	39.8	32.49	32.52	32.54	32.39	21:10
90.0	81.7	90.3	79.2	87.2	75.5	85.76	84.36	82.67	84.26	-0.05	39.7	39.8	39.8	39.8	32.45	32.43	32.48	32.31	21:11
90.0	81.8	90.3	79.3	87.1	75.5	85.74	84.40	82.66	84.27	-0.05	39.7	39.8	39.8	39.8	32.43	32.40	32.55	32.30	21:12
90.0	81.7	90.3	79.2	87.1	75.4	85.75	84.35	82.65	84.25	-0.06	39.7	39.7	39.8	39.7	32.41	32.39	32.44	32.24	21:13
89.9	81.7	90.2	79.4	87.1	75.7	85.74	84.41	82.69	84.28	-0.06	39.6	39.8	39.8	39.7	32.38	32.37	32.55	32.29	21:14
89.9	81.7	90.2	79.3	87.0	75.7	85.75	84.39	82.66	84.27	-0.07	39.7	39.8	39.8	39.8	32.42	32.44	32.49	32.33	21:15
89.9	81.8	90.3	79.3	87.1	75.6	85.74	84.40	82.67	84.27	-0.07	39.7	39.7	39.8	39.7	32.41	32.40	32.61	32.32	21:16
89.9	81.7	90.2	79.3	87.1	75.6	85.75	84.38	82.66	84.27	-0.07	39.6	39.8	39.8	39.7	32.50	32.45	32.56	32.37	21:17
89.9	81.7	90.2	79.3	87.0	75.6	85.73	84.38	82.65	84.25	-0.08	39.7	39.8	39.8	39.7	32.54	32.52	32.57	32.41	21:18
90.0	81.7	90.3	79.2	87.1	75.4	85.74	84.34	82.62	84.23	-0.09	39.6	39.7	39.8	39.7	32.50	32.47	32.52	32.32	21:19
89.9	81.8	90.3	79.3	87.1	75.5	85.76	84.40	82.65	84.27	-0.09	39.6	39.7	39.8	39.7	32.46	32.42	32.51	32.30	21:20
90.0	81.8	90.3	79.2	87.1	75.4	85.75	84.35	82.62	84.24	-0.09	39.7	39.8	39.8	39.8	32.46	32.44	32.51	32.31	21:21
89.9	81.8	90.3	79.3	87.1	75.5	85.73	84.38	82.65	84.25	-0.09	39.7	39.7	39.7	39.7	32.45	32.42	32.52	32.29	21:22
89.9	81.6	90.2	79.2	87.1	75.6	85.73	84.35	82.66	84.25	-0.10	39.6	39.7	39.8	39.7	32.49	32.44	32.56	32.35	21:23
89.9	81.6	90.2	79.2	87.1	75.6	85.71	84.34	82.66	84.24	-0.10	39.6	39.7	39.8	39.7	32.56	32.51	32.63	32.41	21:24
90.0	81.7	90.3	79.1	87.1	75.4	85.73	84.32	82.60	84.22	-0.10	39.6	39.7	39.8	39.7	32.48	32.44	32.65	32.36	21:25
89.9	81.7	90.2	79.3	87.0	75.6	85.72	84.39	82.65	84.25	-0.11	39.6	39.7	39.7	39.7	32.52	32.49	32.56	32.36	21:26
90.0	81.7	90.3	79.2	87.1	75.4	85.73	84.34	82.62	84.23	-0.11	39.6	39.9	39.8	39.9	32.42	32.39	32.60	32.32	21:27
89.9	81.7	90.2	79.3	87.0	75.6	85.72	84.39	82.65	84.25	-0.11	39.6	39.8	39.7	39.7	32.57	32.50	32.60	32.41	21:28
90.0	81.7	90.3	79.2	87.1	75.4	85.73	84.33	82.64	84.23	-0.12	39.5	39.8	39.8	39.7	32.57	32.54	32.59	32.39	21:29
90.0	81.7	90.3	79.2	87.1	75.4	85.74	84.33	82.62	84.23	-0.12	39.6	39.8	39.6	39.7	32.59	32.52	32.62	32.41	21:30
90.0	81.8	90.3	79.2	87.1	75.4	85.75	84.35	82.61	84.24	-0.12	39.6	39.6	39.7	39.6	32.58	32.51	32.61	32.37	21:31

COMMENTS

Tested By C L Rutledge Date 6-4-93 Reviewed By Frank A. Denney Date 6-5-93

AMPACITY TEST. JOB NUMBER 93-0501. SAMPLE NUMBER 93-0501-04 DATA FILE 3p6gno04.001 06-03-1993

POSITION 1		POSITION 2		POSITION 3		_POSITION AVERAGES_			AVG		AMBIENT TEMPERATURE				AMPERES				
T1mx	T1mn	T2mx	T2mn	T3mx	T3mn	T1avg	T2avg	T3avg	Twave	SLOPE	Tam1	Tam2	Tam3	Taav	Ib	Iw	Ir	I'	TIME
90.[illegible]	81.7	90.3	79.1	87.1	75.5	85.76	84.33	82.64	84.24	-0.12	39.6	39.7	39.7	39.5	32.50	32.41	32.52	32.29	21:32
89.9	81.6	90.2	79.2	87.1	75.6	85.70	84.33	82.65	84.23	-0.13	39.6	39.7	39.7	39.7	32.52	32.41	32.52	32.33	21:33
89.8	81.7	90.2	79.3	87.0	75.6	85.70	84.39	82.66	84.25	-0.13	39.6	39.7	39.7	39.7	32.54	32.40	32.52	32.32	21:34
89.5	81.6	90.2	79.3	87.0	75.5	85.73	84.37	82.64	84.25	-0.13	39.5	39.7	39.7	39.6	32.55	32.43	32.57	32.34	21:35
89.9	81.8	90.2	79.3	87.0	75.5	85.73	84.38	82.64	84.25	-0.13	39.6	39.7	39.8	39.7	32.48	32.37	32.59	32.21	21:36
90.0	81.7	90.3	79.2	87.1	75.4	85.73	84.35	82.61	84.23	-0.13	39.6	39.6	39.7	39.6	32.56	32.48	32.61	32.25	21:37
89.9	81.7	90.2	79.3	87.0	75.6	85.73	84.38	82.63	84.24	-0.13	39.6	39.6	39.8	39.7	32.52	32.48	32.71	32.42	21:38
89.9	81.8	90.3	79.3	87.0	75.5	85.73	84.39	82.63	84.25	-0.12	39.6	39.8	39.8	39.7	32.58	32.58	32.60	32.42	21:39
89.9	81.7	90.2	79.3	87.0	75.5	85.72	84.39	82.64	84.25	-0.12	39.5	39.6	39.7	39.6	32.52	32.54	32.65	32.40	21:40
89.9	81.7	90.2	79.3	87.0	75.5	85.73	84.37	82.63	84.24	-0.12	39.5	39.6	39.7	39.6	32.60	32.62	32.61	32.41	21:41
89.9	81.7	90.2	79.3	87.0	75.4	85.73	84.37	82.61	84.24	-0.12	39.5	39.7	39.8	39.7	32.57	32.59	32.61	32.41	21:42
89.9	81.8	90.2	79.4	87.1	75.5	85.75	84.39	82.65	84.25	-0.11	39.6	39.7	39.7	39.7	32.60	32.63	32.63	32.45	21:43
89.9	81.7	90.2	79.3	87.0	75.5	85.76	84.39	82.64	84.26	-0.11	39.5	39.7	39.7	39.6	32.55	32.60	32.60	32.40	21:44
89.9	81.7	90.2	79.2	87.1	75.6	85.75	84.34	82.64	84.24	-0.10	39.5	39.6	39.7	39.6	32.50	32.55	32.55	32.35	21:45
89.9	81.7	90.2	79.1	87.1	75.4	85.72	84.31	82.61	84.21	-0.10	39.6	39.6	39.7	39.6	32.55	32.50	32.58	32.35	21:46
89.5	81.7	90.3	79.2	87.0	75.4	85.71	84.36	82.60	84.22	-0.10	39.6	39.5	39.7	39.6	32.57	32.62	32.60	32.39	21:47
89.9	81.7	90.2	79.3	87.0	75.5	85.72	84.35	82.64	84.24	-0.10	39.5	39.6	39.6	39.6	32.52	32.50	32.58	32.36	21:48
89.9	81.8	90.3	79.3	87.0	75.4	85.73	84.35	82.60	84.23	-0.10	39.5	39.7	39.7	39.6	32.59	32.65	32.63	32.43	21:49
89.9	81.6	90.2	79.2	87.1	75.6	85.72	84.31	82.63	84.22	-0.09	39.5	39.6	39.7	39.6	32.61	32.63	32.65	32.45	21:50
89.9	81.7	90.2	79.3	87.0	75.6	85.74	84.38	82.64	84.25	-0.09	39.6	39.6	39.6	39.6	32.53	32.57	32.68	32.42	21:51
89.9	81.7	90.3	79.3	87.0	75.4	85.71	84.37	82.61	84.23	-0.09	39.5	39.7	39.7	39.6	32.64	32.59	32.66	32.47	21:52
89.9	81.7	90.2	79.3	87.0	75.5	85.74	84.37	82.61	84.24	-0.09	39.5	39.6	39.7	39.6	32.50	32.57	32.68	32.42	21:53
89.9	81.7	90.2	79.3	87.0	75.6	85.75	84.35	82.62	84.24	-0.08	39.5	39.6	39.7	39.6	32.52	32.58	32.68	32.45	21:54
89.9	81.7	90.3	79.1	87.1	75.5	85.74	84.31	82.62	84.22	-0.08	39.5	39.5	39.7	39.6	32.54	32.60	32.73	32.41	21:55
90.0	81.7	90.3	79.1	87.1	75.4	85.73	84.31	82.60	84.21	-0.08	39.5	39.6	39.7	39.6	32.66	32.70	32.71	32.49	21:56
89.9	81.7	90.2	79.3	87.0	75.6	85.74	84.37	82.63	84.25	-0.07	39.5	39.5	39.7	39.6	32.55	32.69	32.69	32.49	21:57
89.9	81.7	90.3	79.3	87.0	75.4	85.74	84.37	82.59	84.23	-0.07	39.5	39.5	39.7	39.5	32.56	32.60	32.53	32.38	21:58
89.9	81.6	90.2	79.2	87.1	75.5	85.74	84.32	82.61	84.22	-0.07	39.5	39.6	39.6	39.6	32.62	32.66	32.70	32.47	21:59
89.9	81.7	90.2	79.3	87.0	75.5	85.73	84.38	82.63	84.25	-0.06	39.4	39.7	39.6	39.6	32.66	32.68	32.72	32.49	22:00
90.0	81.7	90.3	79.2	87.1	75.4	85.75	84.35	82.61	84.24	-0.06	39.5	39.5	39.7	39.6	32.58	32.57	32.70	32.39	22:01
89.9	81.6	90.2	79.1	87.1	75.4	85.74	84.30	82.60	84.21	-0.06	39.5	39.5	39.7	39.6	32.61	32.59	32.73	32.44	22:02
89.9	81.8	90.3	79.2	87.0	75.4	85.74	84.36	82.59	84.23	-0.05	39.5	39.6	39.6	39.6	32.58	32.58	32.73	32.41	22:03
90.0	81.7	90.3	79.1	87.1	75.4	85.75	84.31	82.58	84.21	-0.05	39.5	39.7	39.6	39.6	32.45	32.55	32.72	32.37	22:04
90.[illegible]	81.7	90.3	79.1	87.1	75.5	85.74	84.31	82.62	84.22	-0.05	39.5	39.7	39.6	39.6	32.52	32.56	32.62	32.37	22:05
89.[illegible]	81.7	90.2	79.3	87.0	75.6	85.69	84.37	82.53	84.23	-0.04	39.5	39.7	39.7	39.6	32.43	32.46	32.54	32.33	22:06
89.9	81.6	90.2	79.1	87.1	75.5	85.72	84.31	82.64	84.22	-0.04	39.4	39.6	39.7	39.5	32.48	32.50	32.57	32.31	22:07
89.9	81.5	90.2	79.2	87.1	75.6	85.70	84.34	82.64	84.23	-0.04	39.5	39.5	39.6	39.5	32.61	32.64	32.67	32.44	22:08
89.9	81.7	90.3	79.1	87.1	75.3	85.72	84.30	82.58	84.20	-0.04	39.5	39.5	39.6	39.5	32.61	32.65	32.69	32.42	22:09
90.0	81.7	90.3	79.1	87.1	75.4	85.73	84.31	82.58	84.21	-0.04	39.4	39.6	39.5	39.5	32.66	32.67	32.72	32.45	22:10
89.9	81.7	90.2	79.3	87.0	75.5	85.71	84.38	82.62	84.24	-0.04	39.5	39.5	39.6	39.5	32.70	32.69	32.72	32.45	22:11
89.9	81.6	90.2	79.1	87.1	75.5	85.74	84.30	82.61	84.22	-0.04	39.5	39.4	39.5	39.5	32.57	32.65	32.70	32.44	22:12
89.8	81.6	90.2	79.3	87.0	75.6	85.70	84.34	82.62	84.22	-0.04	39.4	39.5	39.5	39.5	32.61	32.59	32.70	32.41	22:13
89.9	81.6	90.2	79.2	87.1	75.5	85.70	84.31	82.60	84.20	-0.04	39.5	39.5	39.6	39.5	32.62	32.63	32.70	32.43	22:14
89.9	81.7	90.3	79.2	87.0	75.4	85.71	84.35	82.57	84.21	-0.04	39.4	39.5	39.5	39.5	32.58	32.60	32.79	32.41	22:15
89.9	81.7	90.2	79.3	87.0	75.5	85.72	84.37	82.61	84.23	-0.03	39.4	39.5	39.6	39.5	32.53	32.62	32.72	32.44	22:16
89.9	81.6	90.2	79.2	87.1	75.5	85.72	84.33	82.61	84.22	-0.03	39.4	39.4	39.5	39.5	32.50	32.62	32.69	32.38	22:17
89.9	81.6	90.2	79.1	87.1	75.3	85.71	84.28	82.57	84.19	-0.03	39.3	39.4	39.5	39.4	32.60	32.72	32.63	32.41	22:18
89.9	81.7	90.2	79.1	87.1	75.4	85.74	84.31	82.59	84.21	-0.04	39.5	39.5	39.6	39.5	32.47	32.56	32.63	32.34	22:19
89.9	81.7	90.2	79.3	87.0	75.5	85.73	84.36	82.58	84.22	-0.03	39.4	39.4	39.6	39.5	32.54	32.60	32.54	32.34	22:20
89.9	81.7	90.3	79.2	87.0	75.4	85.73	84.35	82.59	84.22	-0.03	39.4	39.5	39.6	39.5	32.52	32.58	32.52	32.31	22:21
89.9	81.7	90.2	79.3	87.0	75.5	85.72	84.34	82.60	84.22	-0.03	39.5	39.5	39.5	39.5	32.59	32.68	32.62	32.42	22:22
89.9	81.7	90.2	79.3	87.0	75.4	85.71	84.35	82.58	84.21	-0.03	39.5	39.4	39.5	39.5	32.60	32.70	32.66	32.42	22:23
89.9	81.6	90.3	79.1	87.1	75.4	85.72	84.30	82.58	84.20	-0.03	39.4	39.4	39.5	39.4	32.54	32.63	32.60	32.34	22:24
89.9	81.6	90.2	79.1	87.1	75.4	85.70	84.29	82.57	84.19	-0.04	39.4	39.5	39.6	39.5	32.55	32.64	32.62	32.39	22:25
89.9	81.7	90.3	79.1	87.0	75.3	85.69	84.30	82.55	84.18	-0.04	39.4	39.5	39.6	39.5	32.53	32.52	32.51	32.34	22:26
89.8	81.6	90.2	79.2	87.0	75.5	85.69	84.32	82.60	84.21	-0.04	39.4	39.5	39.5	39.5	32.52	32.62	32.59	32.36	22:27
89.9	81.7	90.2	79.3	87.0	75.5	85.69	84.34	82.59	84.21	-0.04	39.4	39.4	39.6	39.5	32.46	32.55	32.64	32.33	22:28
89.9	81.6	90.2	79.1	87.1	75.5	85.67	84.26	82.58	84.17	-0.05	39.3	39.4	39.5	39.4	32.50	32.57	32.57	32.30	22:29
89.9	81.6	90.2	79.1	87.1	75.4	85.69	84.26	82.54	84.16	-0.05	39.4	39.5	39.5	39.4	32.52	32.59	32.71	32.37	22:30
89.9	81.7	90.2	79.2	87.0	75.4	85.68	84.32	82.55	84.19	-0.05	39.4	39.3	39.5	39.4	32.59	32.62	32.64	32.36	22:31

COMMENTS _____

Tested By CL Lutledge Date 6-4-93 Reviewed By Frank A. Deeney Date 6-5-93

AMPACITY TEST. JOB NUMBER 93-0501. SAMPLE NUMBER 93-0501-09 DATA FILE 3p6gno09.001 06-01-1993

POSITION 1		POSITION 2		POSITION 3		POSITION AVERAGES			AVG		AMBIENT TEMPERATURE				AMPERES				
T1mx	T1mn	T2mx	T2mn	T3mx	T3mn	T1avg	T2avg	T3avg	Twave	SLOPE	Tam1	Tam2	Tam3	Taav	Ib	Iw	Ir	I'	TIME
90.1	79.4	90.4	81.1	91.4	82.2	84.50	84.62	85.29	84.80	0.05	39.9	40.5	40.3	40.2	33.37	33.49	33.29	33.34	13:48
90.1	79.4	90.5	81.1	91.4	82.2	84.53	84.65	85.29	84.82	0.04	39.9	40.5	40.3	40.2	33.25	33.37	33.30	33.24	13:49
90.0	79.4	90.5	81.1	91.4	82.2	84.52	84.64	85.28	84.81	0.03	39.9	40.5	40.3	40.2	33.34	33.45	33.32	33.29	13:50
90.0	79.4	90.5	81.2	91.3	82.2	84.51	84.64	85.27	84.81	0.02	39.9	40.4	40.2	40.1	33.25	33.38	33.33	33.22	13:51
90.1	79.4	90.5	81.1	91.4	82.2	84.50	84.63	85.28	84.80	0.01	39.8	40.5	40.1	40.1	33.46	33.59	33.42	33.39	13:52
90.1	79.4	90.5	81.1	91.3	82.2	84.53	84.65	85.28	84.82	0.01	39.8	40.5	40.3	40.2	33.36	33.53	33.46	33.36	13:53
90.0	79.4	90.5	81.2	91.3	82.1	84.53	84.64	85.26	84.81	0.00	39.9	40.6	40.2	40.2	33.41	33.53	33.39	33.37	13:54
90.1	79.4	90.5	81.1	91.3	82.2	84.51	84.63	85.29	84.81	-0.00	39.9	40.5	40.3	40.2	33.38	33.54	33.48	33.40	13:55
90.0	79.4	90.5	81.1	91.4	82.2	84.52	84.66	85.29	84.82	-0.01	39.8	40.4	40.3	40.2	33.41	33.53	33.37	33.34	13:56
90.1	79.4	90.4	81.0	91.5	82.2	84.51	84.61	85.29	84.80	-0.01	39.8	40.4	40.3	40.2	33.30	33.46	33.40	33.33	13:57
90.0	79.5	90.5	81.2	91.4	82.1	84.53	84.64	85.27	84.81	-0.01	39.8	40.4	40.2	40.2	33.43	33.57	33.40	33.39	13:58
90.0	79.4	90.5	81.2	91.4	82.2	84.53	84.65	85.29	84.82	-0.01	39.8	40.3	40.2	40.1	33.33	33.51	33.45	33.31	13:59
90.1	79.4	90.4	81.1	91.3	82.1	84.51	84.61	85.28	84.80	-0.02	39.8	40.3	40.2	40.1	33.39	33.51	33.37	33.35	14:00
90.1	79.4	90.4	81.1	91.3	82.2	84.54	84.63	85.29	84.82	-0.02	39.9	40.3	40.3	40.2	33.36	33.50	33.45	33.37	14:01
90.1	79.4	90.5	81.1	91.4	82.2	84.54	84.65	85.30	84.83	-0.02	40.0	40.3	40.3	40.2	33.45	33.55	33.40	33.40	14:02
90.1	79.5	90.4	81.1	91.4	82.1	84.55	84.63	85.28	84.82	-0.02	39.9	40.5	40.3	40.2	33.38	33.55	33.49	33.43	14:03
90.0	79.5	90.5	81.2	91.3	82.1	84.54	84.65	85.27	84.82	-0.01	39.8	40.4	40.2	40.1	33.40	33.55	33.38	33.35	14:04
90.1	79.5	90.4	81.1	91.4	82.1	84.54	84.60	85.28	84.81	-0.02	39.9	40.4	40.2	40.2	33.33	33.53	33.42	33.38	14:05
90.1	79.4	90.5	81.1	91.3	82.2	84.54	84.65	85.29	84.83	-0.02	40.0	40.4	40.3	40.2	33.43	33.58	33.42	33.41	14:06
90.1	79.5	90.4	81.1	91.5	82.2	84.55	84.63	85.32	84.83	-0.01	39.9	40.5	40.2	40.2	33.42	33.58	33.40	33.42	14:07
90.1	79.5	90.4	81.1	91.5	82.2	84.54	84.63	85.32	84.83	-0.01	39.8	40.4	40.3	40.2	33.47	33.62	33.46	33.46	14:08
90.1	79.4	90.6	81.2	91.4	82.2	84.55	84.69	85.33	84.85	-0.01	40.0	40.4	40.3	40.2	33.52	33.65	33.49	33.46	14:09
90.1	79.4	90.6	81.2	91.4	82.2	84.54	84.69	85.31	84.85	-0.01	40.0	40.5	40.2	40.2	33.51	33.61	33.44	33.43	14:10
90.1	79.5	90.6	81.2	91.4	82.2	84.58	84.71	85.33	84.87	0.00	39.9	40.4	40.3	40.2	33.54	33.52	33.48	33.42	14:11
90.2	79.5	90.4	81.1	91.5	82.2	84.55	84.64	85.34	84.84	0.00	39.8	40.4	40.3	40.2	33.48	33.44	33.42	33.38	14:12
90.2	79.5	90.4	81.1	91.4	82.1	84.57	84.66	85.32	84.85	0.01	40.0	40.4	40.1	40.2	33.50	33.48	33.44	33.40	14:13
90.1	79.5	90.6	81.2	91.5	82.2	84.59	84.70	85.33	84.87	0.01	39.9	40.4	40.2	40.2	33.46	33.42	33.41	33.32	14:14
90.1	79.5	90.4	81.1	91.4	82.2	84.56	84.64	85.32	84.84	0.02	39.9	40.4	40.2	40.2	33.30	33.42	33.39	33.31	14:15
90.1	79.5	90.4	81.1	91.4	82.1	84.54	84.65	85.32	84.84	0.02	39.9	40.4	40.3	40.2	33.27	33.41	33.41	33.31	14:16
90.1	79.5	90.4	81.1	91.4	82.1	84.58	84.63	85.28	84.83	0.02	39.9	40.4	40.3	40.2	33.19	33.35	33.33	33.24	14:17
90.1	79.5	90.5	81.1	91.5	82.2	84.56	84.66	85.33	84.85	0.02	39.9	40.4	40.2	40.2	33.24	33.41	33.38	33.26	14:18
90.[illegible]	79.5	90.6	81.2	91.4	82.2	84.56	84.69	85.31	84.85	0.03	39.9	40.4	40.3	40.2	33.34	33.42	33.38	33.28	14:19
9[illegible]	79.5	90.5	81.2	91.3	82.1	84.55	84.67	85.28	84.83	0.03	39.9	40.4	40.2	40.1	33.35	33.42	33.38	33.29	14:20
90.0	79.5	90.5	81.2	91.4	82.1	84.56	84.67	85.29	84.84	0.03	39.9	40.4	40.2	40.2	33.36	33.44	33.38	33.31	14:21
90.0	79.5	90.5	81.2	91.5	82.2	84.55	84.68	85.30	84.84	0.04	39.8	40.3	40.2	40.1	33.29	33.36	33.32	33.21	14:22
90.1	79.5	90.6	81.2	91.5	82.2	84.56	84.70	85.33	84.86	0.04	39.9	40.3	40.2	40.1	33.28	33.34	33.28	33.18	14:23
90.1	79.4	90.6	81.2	91.4	82.2	84.56	84.69	85.32	84.86	0.04	39.9	40.5	40.1	40.2	33.12	33.25	33.32	33.12	14:24
90.0	79.5	90.5	81.2	91.4	82.1	84.53	84.64	85.28	84.82	0.04	39.9	40.4	40.2	40.1	33.12	33.27	33.25	33.13	14:25
90.1	79.5	90.4	81.1	91.4	82.1	84.54	84.62	85.27	84.81	0.04	39.8	40.4	40.2	40.2	33.12	33.26	33.34	33.18	14:26
90.0	79.4	90.5	81.1	91.4	82.2	84.53	84.66	85.28	84.83	0.04	39.9	40.3	40.3	40.2	33.28	33.38	33.36	33.24	14:27
90.0	79.5	90.5	81.2	91.4	82.2	84.53	84.65	85.28	84.82	0.04	39.9	40.4	40.0	40.1	33.22	33.32	33.40	33.20	14:28
90.0	79.5	90.5	81.2	91.3	82.1	84.54	84.65	85.26	84.82	0.04	39.9	40.2	40.1	40.1	33.33	33.38	33.35	33.24	14:29
90.1	79.5	90.4	81.1	91.3	82.1	84.53	84.62	85.28	84.81	0.04	39.8	40.3	40.2	40.1	33.30	33.36	33.44	33.29	14:30
90.1	79.5	90.4	81.1	91.4	82.2	84.54	84.62	85.29	84.82	0.04	39.8	40.2	40.2	40.1	33.37	33.42	33.38	33.32	14:31
90.0	79.4	90.5	81.1	91.4	82.2	84.53	84.66	85.29	84.82	0.04	39.8	40.3	40.1	40.1	33.26	33.33	33.42	33.21	14:32
90.1	79.4	90.6	81.2	91.4	82.2	84.56	84.69	85.31	84.85	0.04	39.8	40.3	40.3	40.1	33.34	33.35	33.36	33.23	14:33
90.1	79.5	90.4	81.1	91.4	82.2	84.56	84.63	85.31	84.83	0.04	39.8	40.2	40.1	40.0	33.24	33.28	33.37	33.20	14:34
90.1	79.5	90.4	81.1	91.4	82.1	84.53	84.62	85.27	84.81	0.04	39.8	40.2	40.1	40.0	33.38	33.39	33.38	33.29	14:35
90.1	79.4	90.6	81.1	91.3	82.2	84.56	84.68	85.30	84.85	0.04	39.8	40.3	40.2	40.1	33.30	33.33	33.42	33.22	14:36
90.1	79.5	90.4	81.1	91.4	82.1	84.55	84.61	85.28	84.81	0.04	39.8	40.3	40.1	40.1	33.36	33.35	33.35	33.29	14:37
90.1	79.5	90.4	81.1	91.4	82.1	84.54	84.61	85.26	84.81	0.03	39.9	40.4	40.1	40.1	33.31	33.33	33.33	33.26	14:38
90.0	79.4	90.5	81.2	91.3	82.1	84.53	84.66	85.26	84.82	0.03	39.9	40.3	40.1	40.1	33.32	33.36	33.35	33.23	14:39
90.1	79.4	90.5	81.1	91.3	82.2	84.54	84.65	85.28	84.82	0.03	39.8	40.4	40.1	40.1	33.40	33.40	33.38	33.28	14:40
90.1	79.5	90.4	81.1	91.4	82.1	84.53	84.62	85.30	84.82	0.02	39.7	40.4	40.2	40.1	33.46	33.48	33.44	33.39	14:41
90.1	79.5	90.4	81.2	91.3	82.1	84.57	84.64	85.26	84.82	0.02	39.8	40.3	40.1	40.1	33.44	33.46	33.40	33.34	14:42
90.1	79.5	90.4	81.1	91.4	82.1	84.54	84.63	85.29	84.82	0.02	39.8	40.3	40.0	40.0	33.41	33.40	33.38	33.30	14:43
90.1	79.5	90.4	81.2	91.3	82.1	84.56	84.63	85.27	84.82	0.02	39.8	40.3	40.1	40.1	33.36	33.35	33.36	33.27	14:44
90.1	79.5	90.4	81.1	91.3	82.1	84.54	84.62	85.26	84.81	0.01	39.8	40.3	40.1	40.1	33.32	33.31	33.31	33.22	14:45
90.1	79.4	90.4	81.0	91.3	82.2	84.53	84.63	85.27	84.81	0.01	39.8	40.4	40.2	40.1	33.33	33.32	33.31	33.24	14:46
90.1	79.5	90.4	81.1	91.3	82.0	84.55	84.62	85.24	84.80	0.00	39.8	40.3	40.0	40.1	33.40	33.37	33.36	33.29	14:47

COMMENTS _____

Tested By Cynthia L Rutledge Date 6-2-93 Reviewed By Frank A. Dewey Date 6-2-93

AMPACITY TEST, JOB NUMBER 93-0501, SAMPLE NUMBER 93-0501-09 DATA FILE Sp6gne09.001 06-01-1993

POSITION 1		POSITION 2		POSITION 3		POSITION AVERAGES			AVG		AMBIENT TEMPERATURE				AMPERES				
T[illegible]	T1mn	T2mx	T2mn	T3mx	T3mn	T1avg	T2avg	T3avg	Twave	SLOPE	Tam1	Tam2	Tam3	Taav	Ib	Iw	Ir	I'	TIME
90.1	79.5	90.4	81.1	91.4	82.1	84.53	84.61	85.28	84.80	-0.00	39.8	40.3	40.1	40.1	33.38	33.37	33.36	33.27	14:48
90.0	79.4	90.5	81.1	91.4	82.2	84.52	84.66	85.28	84.82	-0.00	39.9	40.3	40.1	40.1	33.36	33.36	33.35	33.23	14:49
90.0	79.4	90.5	81.1	91.4	82.2	84.54	84.66	85.29	84.83	-0.00	39.8	40.3	40.1	40.1	33.35	33.34	33.34	33.22	14:50
90.1	79.5	90.4	81.1	91.4	82.1	84.54	84.61	85.28	84.81	-0.01	39.9	40.2	40.2	40.1	33.29	33.28	33.36	33.22	14:51
90.0	79.5	90.5	81.2	91.3	82.1	84.55	84.65	85.24	84.81	-0.01	39.8	40.3	40.1	40.1	33.36	33.34	33.32	33.22	14:52
90.1	79.4	90.5	81.1	91.4	82.2	84.53	84.64	85.27	84.81	-0.01	39.8	40.3	40.2	40.1	33.26	33.24	33.33	33.17	14:53
90.1	79.5	90.4	81.1	91.3	82.1	84.55	84.63	85.27	84.82	-0.02	39.8	40.4	40.2	40.1	33.34	33.33	33.30	33.25	14:54
90.1	79.4	90.4	81.1	91.4	82.1	84.53	84.62	85.28	84.81	-0.02	39.8	40.3	40.2	40.1	33.23	33.28	33.34	33.21	14:55
90.0	79.5	90.5	81.2	91.4	82.0	84.53	84.63	85.25	84.80	-0.02	39.9	40.2	40.2	40.1	33.38	33.40	33.34	33.27	14:56
90.1	79.4	90.4	81.1	91.4	82.2	84.53	84.62	85.30	84.82	-0.02	39.8	40.3	40.2	40.1	33.30	33.34	33.39	33.27	14:57
90.1	79.4	90.4	81.1	91.4	82.1	84.51	84.62	85.28	84.80	-0.03	39.8	40.3	40.1	40.1	33.34	33.38	33.34	33.26	14:58
90.1	79.5	90.4	81.1	91.4	82.1	84.54	84.61	85.27	84.81	-0.03	39.9	40.3	40.1	40.1	33.35	33.40	33.36	33.29	14:59
90.1	79.5	90.4	81.1	91.3	82.1	84.53	84.59	85.25	84.79	-0.04	39.8	40.3	40.0	40.0	33.26	33.30	33.28	33.19	15:00
90.1	79.5	90.4	81.1	91.4	82.0	84.51	84.60	85.25	84.78	-0.04	39.8	40.4	40.2	40.1	33.33	33.37	33.34	33.29	15:01
90.0	79.4	90.5	81.1	91.3	82.2	84.50	84.62	85.24	84.79	-0.04	39.9	40.4	40.2	40.2	33.20	33.22	33.20	33.13	15:02
90.1	79.5	90.3	81.1	91.3	82.0	84.50	84.58	85.21	84.76	-0.05	39.9	40.3	40.1	40.1	33.27	33.24	33.23	33.19	15:03
90.1	79.4	90.3	81.0	91.4	82.1	84.50	84.57	85.22	84.76	-0.06	39.8	40.3	40.2	40.1	33.12	33.13	33.12	33.07	15:04
90.1	79.4	90.4	81.0	91.4	82.1	84.48	84.59	85.25	84.78	-0.06	39.9	40.4	40.2	40.2	33.20	33.19	33.14	33.11	15:05
90.1	79.4	90.4	81.0	91.3	82.1	84.49	84.57	85.21	84.76	-0.07	39.9	40.3	40.2	40.2	33.31	33.29	33.26	33.24	15:06
90.0	79.4	90.4	81.1	91.3	82.0	84.50	84.60	85.21	84.77	-0.07	39.9	40.4	40.2	40.2	33.29	33.24	33.24	33.19	15:07
90.0	79.4	90.4	81.1	91.3	82.0	84.49	84.60	85.21	84.76	-0.08	39.8	40.4	40.2	40.1	33.31	33.27	33.26	33.20	15:08
90.0	79.4	90.4	81.1	91.3	82.1	84.49	84.60	85.23	84.77	-0.08	39.9	40.4	40.2	40.2	33.25	33.20	33.18	33.14	15:09
90.0	79.4	90.4	81.1	91.4	82.0	84.49	84.57	85.20	84.75	-0.06	39.9	40.4	40.2	40.2	33.28	33.24	33.33	33.25	15:10
90.0	79.4	90.5	81.1	91.3	82.1	84.50	84.61	85.23	84.78	-0.08	39.9	40.4	40.2	40.2	33.34	33.30	33.30	33.24	15:11
90.1	79.4	90.3	81.0	91.3	82.1	84.48	84.54	85.22	84.75	-0.06	39.9	40.4	40.2	40.2	33.15	33.20	33.29	33.19	15:12
90.0	79.4	90.4	81.1	91.4	82.1	84.49	84.60	85.22	84.77	-0.08	39.9	40.4	40.3	40.2	33.29	33.27	33.27	33.21	15:13
90.0	79.4	90.4	81.1	91.2	82.1	84.48	84.60	85.18	84.75	-0.06	40.0	40.4	40.3	40.2	33.04	33.10	33.17	33.05	15:14
90.0	79.4	90.4	81.1	91.3	82.1	84.47	84.58	85.21	84.75	-0.09	39.8	40.4	40.2	40.1	33.17	33.18	33.18	33.10	15:15
90.0	79.4	90.3	81.0	91.3	82.1	84.44	84.53	85.21	84.73	-0.09	39.8	40.4	40.2	40.1	33.07	33.12	33.22	33.09	15:16
90.0	79.4	90.3	81.1	91.2	82.0	84.45	84.54	85.17	84.72	-0.10	40.0	40.4	40.1	40.2	33.26	33.24	33.24	33.20	15:17
89.9	79.3	90.4	81.0	91.3	82.1	84.44	84.57	85.20	84.74	-0.10	40.0	40.4	40.2	40.2	33.26	33.24	33.24	33.19	15:18
89.9	79.4	90.4	81.1	91.3	82.1	84.46	84.58	85.21	84.75	-0.10	39.9	40.4	40.3	40.2	33.26	33.24	33.23	33.17	15:19
[illegible]	79.4	90.3	81.1	91.2	82.0	84.47	84.53	85.15	84.72	-0.10	39.9	40.4	40.1	40.1	33.34	33.30	33.30	33.27	15:20
[illegible]	79.4	90.4	81.1	91.3	82.1	84.46	84.57	85.17	84.73	-0.11	39.9	40.4	40.1	40.1	33.28	33.27	33.27	33.20	15:21
90.0	79.4	90.3	81.0	91.3	82.0	84.46	84.51	85.16	84.71	-0.11	39.9	40.4	40.2	40.2	33.25	33.24	33.21	33.22	15:22
89.9	79.3	90.4	81.1	91.3	82.1	84.45	84.57	85.19	84.73	-0.11	40.0	40.4	40.2	40.2	33.24	33.20	33.18	33.16	15:23
90.0	79.4	90.3	80.9	91.3	82.1	84.45	84.52	85.19	84.72	-0.11	40.0	40.4	40.4	40.2	33.30	33.25	33.24	33.27	15:24
89.9	79.3	90.4	81.1	91.2	82.1	84.45	84.58	85.18	84.74	-0.11	39.9	40.3	40.1	40.1	33.25	33.22	33.33	33.19	15:25
89.9	79.3	90.4	81.0	91.3	82.1	84.44	84.57	85.18	84.73	-0.12	39.9	40.4	40.3	40.2	33.35	33.30	33.30	33.26	15:26
90.0	79.4	90.3	81.0	91.3	82.1	84.44	84.53	85.18	84.72	-0.12	39.7	40.4	40.3	40.1	33.24	33.28	33.34	33.25	15:27
90.0	79.4	90.3	81.0	91.3	82.0	84.44	84.51	85.16	84.71	-0.12	40.0	40.4	40.3	40.2	33.35	33.34	33.32	33.33	15:28
90.0	79.4	90.3	81.0	91.3	82.0	84.42	84.50	85.17	84.70	-0.13	39.9	40.4	40.3	40.2	33.21	33.20	33.27	33.23	15:29
90.0	79.4	90.2	81.0	91.2	81.9	84.43	84.49	85.14	84.69	-0.14	39.9	40.4	40.2	40.2	33.31	33.28	33.28	33.29	15:30
90.0	79.3	90.4	81.0	91.2	82.0	84.43	84.54	85.17	84.71	-0.14	39.8	40.4	40.2	40.1	33.20	33.20	33.31	33.19	15:31
89.9	79.4	90.3	81.1	91.2	82.0	84.43	84.53	85.15	84.70	-0.14	39.9	40.5	40.3	40.2	33.41	33.38	33.37	33.35	15:32
90.0	79.4	90.3	81.0	91.3	82.0	84.44	84.52	85.17	84.71	-0.14	39.9	40.4	40.3	40.2	33.34	33.32	33.40	33.35	15:33
89.9	79.4	90.4	81.1	91.2	82.0	84.45	84.54	85.14	84.71	-0.14	39.9	40.4	40.3	40.2	33.44	33.36	33.36	33.35	15:34
90.0	79.4	90.3	81.0	91.2	82.0	84.46	84.52	85.17	84.72	-0.14	40.0	40.4	40.3	40.2	33.34	33.25	33.25	33.28	15:35
89.9	79.4	90.4	81.1	91.3	82.1	84.46	84.58	85.19	84.74	-0.14	40.0	40.4	40.3	40.2	33.36	33.22	33.22	33.23	15:36
90.0	79.4	90.3	81.0	91.2	82.0	84.44	84.51	85.16	84.70	-0.14	40.0	40.4	40.2	40.2	33.32	33.19	33.16	33.21	15:37
89.9	79.4	90.4	81.1	91.3	82.1	84.43	84.55	85.18	84.72	-0.14	40.0	40.4	40.3	40.2	33.41	33.20	33.25	33.26	15:38
89.9	79.3	90.4	81.0	91.2	82.1	84.44	84.56	85.18	84.73	-0.14	39.9	40.4	40.3	40.2	33.42	33.24	33.30	33.26	15:39
89.9	79.4	90.3	81.1	91.3	81.9	84.45	84.54	85.14	84.71	-0.14	39.9	40.5	40.3	40.2	33.40	33.24	33.28	33.29	15:40
89.9	79.4	90.4	81.1	91.3	82.1	84.46	84.58	85.19	84.74	-0.13	40.0	40.5	40.3	40.2	33.43	33.28	33.33	33.30	15:41
90.0	79.4	90.4	81.0	91.3	82.1	84.47	84.57	85.20	84.75	-0.13	40.0	40.5	40.3	40.3	33.38	33.25	33.39	33.33	15:42
90.0	79.4	90.3	81.1	91.3	81.9	84.47	84.53	85.16	84.72	-0.12	40.0	40.5	40.3	40.3	33.44	33.28	33.32	33.35	15:43
90.0	79.4	90.3	81.0	91.2	82.0	84.46	84.51	85.15	84.71	-0.12	40.0	40.5	40.3	40.3	33.24	33.09	33.26	33.21	15:44
90.0	79.4	90.3	81.0	91.3	82.0	84.44	84.52	85.18	84.71	-0.12	39.9	40.5	40.3	40.2	33.39	33.24	33.30	33.31	15:45
90.0	79.4	90.3	81.0	91.3	82.0	84.44	84.52	85.16	84.71	-0.12	40.0	40.5	40.3	40.3	33.34	33.21	33.40	33.33	15:46
90.0	79.4	90.2	80.9	91.3	82.0	84.44	84.50	85.17	84.70	-0.12	40.0	40.5	40.4	40.3	33.42	33.26	33.33	33.36	15:47

COMMENTS _____

Tested By Cynthia L Rutledge Date 6-2-93 Reviewed By Frank A. Deeney Date 6-2-93

AMPACITY TEST. JOB NUMBER 93-0501. SAMPLE NUMBER 93-0501-09 DATA FILE 3p6gno09.001 06-01-1993

POSITION 1		POSITION 2		POSITION 3		_POSITION AVERAGES_			AVG		AMBIENT TEMPERATURE				AMPERES				
T1mx	T1mn	T2mx	T2mn	T3mx	T3mn	T1avg	T2avg	T3avg	Twave	SLOPE	Tam1	Tam2	Tam3	Taav	Ib	Iw	Ir	I'	TIME
90.0	79.4	90.3	81.0	91.2	81.9	84.42	84.50	85.16	84.69	-0.12	40.0	40.4	40.3	40.2	33.33	33.20	33.37	33.30	15:48
89.9	79.4	90.3	81.1	91.3	81.9	84.46	84.54	85.15	84.72	-0.12	40.0	40.5	40.3	40.3	33.42	33.27	33.36	33.34	15:49
89.9	79.4	90.3	81.1	91.2	82.0	84.46	84.55	85.14	84.72	-0.11	40.1	40.5	40.2	40.3	33.41	33.24	33.35	33.32	15:50
89.9	79.4	90.4	81.1	91.3	82.1	84.47	84.58	85.18	84.74	-0.11	40.0	40.5	40.4	40.3	33.42	33.26	33.35	33.32	15:51
89.9	79.3	90.4	81.0	91.3	82.1	84.45	84.56	85.16	84.73	-0.10	40.0	40.6	40.4	40.3	33.38	33.23	33.32	33.30	15:52
89.9	79.3	90.4	81.0	91.3	82.1	84.46	84.57	85.19	84.74	-0.09	40.0	40.5	40.5	40.3	33.42	33.30	33.36	33.35	15:53
90.0	79.4	90.4	81.0	91.3	82.1	84.46	84.56	85.21	84.74	-0.08	40.0	40.5	40.4	40.3	33.47	33.34	33.39	33.40	15:54
90.0	79.4	90.4	81.0	91.3	82.1	84.47	84.57	85.21	84.75	-0.08	40.0	40.5	40.4	40.3	33.49	33.34	33.39	33.39	15:55
89.9	79.4	90.4	81.1	91.3	82.1	84.49	84.59	85.20	84.76	-0.07	40.0	40.5	40.4	40.3	33.23	33.14	33.19	33.16	15:56
90.0	79.4	90.3	81.0	91.2	82.0	84.46	84.53	85.18	84.72	-0.06	40.1	40.5	40.4	40.4	33.44	33.28	33.33	33.39	15:57
90.0	79.4	90.3	81.0	91.3	82.0	84.46	84.51	85.17	84.71	-0.06	40.1	40.5	40.4	40.3	33.37	33.22	33.28	33.33	15:58
90.0	79.4	90.3	81.0	91.2	82.0	84.46	84.53	85.16	84.72	-0.05	40.0	40.6	40.5	40.3	33.30	33.15	33.34	33.30	15:59
89.9	79.4	90.4	81.1	91.3	82.1	84.47	84.57	85.18	84.74	-0.05	40.0	40.5	40.3	40.3	33.40	33.22	33.33	33.31	16:00
89.9	79.4	90.4	81.1	91.3	82.1	84.46	84.57	85.19	84.74	-0.04	40.1	40.6	40.4	40.4	33.32	33.16	33.37	33.29	16:01
90.0	79.4	90.3	81.1	91.2	82.0	84.47	84.54	85.17	84.73	-0.04	40.1	40.5	40.5	40.3	33.52	33.34	33.45	33.47	16:02
90.0	79.5	90.3	81.1	91.2	82.0	84.47	84.54	85.18	84.73	-0.03	40.1	40.6	40.5	40.4	33.34	33.21	33.43	33.37	16:03
90.0	79.4	90.3	81.1	91.2	82.0	84.45	84.53	85.16	84.72	-0.03	40.1	40.5	40.3	40.3	33.45	33.30	33.39	33.40	16:04
90.0	79.4	90.3	81.0	91.3	82.1	84.46	84.54	85.21	84.74	-0.03	40.1	40.5	40.3	40.3	33.39	33.22	33.34	33.34	16:05
89.9	79.4	90.4	81.1	91.3	82.1	84.46	84.60	85.21	84.75	-0.02	40.2	40.6	40.4	40.4	33.42	33.21	33.34	33.32	16:06
89.9	79.4	90.4	81.1	91.2	82.0	84.49	84.59	85.19	84.76	-0.01	40.1	40.6	40.3	40.3	33.44	33.24	33.36	33.35	16:07
90.1	79.4	90.3	81.0	91.3	82.1	84.50	84.55	85.21	84.75	-0.01	40.1	40.6	40.4	40.4	33.50	33.34	33.43	33.46	16:08
90.0	79.4	90.4	81.0	91.4	82.1	84.49	84.58	85.22	84.76	0.00	40.2	40.6	40.4	40.4	33.50	33.34	33.40	33.44	16:09
90.0	79.5	90.4	81.0	91.2	82.0	84.50	84.58	85.18	84.75	0.01	40.2	40.7	40.5	40.4	33.47	33.30	33.34	33.41	16:10
90.1	79.5	90.3	81.0	91.3	82.1	84.50	84.55	85.21	84.75	0.01	40.1	40.6	40.5	40.4	33.42	33.25	33.31	33.38	16:11
90.0	79.4	90.4	81.1	91.4	82.1	84.50	84.61	85.24	84.78	0.02	40.1	40.6	40.5	40.4	33.44	33.27	33.32	33.36	16:12
90.0	79.4	90.5	81.2	91.4	82.1	84.53	84.61	85.23	84.79	0.03	40.1	40.5	40.5	40.4	33.36	33.24	33.30	33.30	16:13
89.9	79.4	90.5	81.1	91.4	82.1	84.49	84.60	85.23	84.77	0.04	40.2	40.7	40.5	40.5	33.45	33.32	33.38	33.41	16:14
90.0	79.5	90.3	81.1	91.2	82.0	84.49	84.56	85.18	84.74	0.04	40.2	40.7	40.5	40.5	33.40	33.29	33.36	33.41	16:15
90.1	79.5	90.3	81.0	91.3	82.1	84.49	84.55	85.21	84.75	0.04	40.2	40.6	40.5	40.4	33.37	33.27	33.45	33.43	16:16
90.0	79.5	90.4	81.1	91.2	82.0	84.51	84.59	85.20	84.76	0.04	40.2	40.6	40.5	40.4	33.46	33.36	33.42	33.44	16:17
90.1	79.4	90.3	81.0	91.4	82.1	84.50	84.58	85.24	84.78	0.05	40.1	40.6	40.4	40.4	33.35	33.24	33.42	33.36	16:18
90.0	79.4	90.4	81.1	91.3	82.2	84.51	84.61	85.22	84.78	0.06	40.2	40.6	40.4	40.4	33.47	33.32	33.39	33.40	16:19
90.0	79.5	90.3	81.1	91.2	82.0	84.53	84.57	85.20	84.77	0.06	40.1	40.6	40.6	40.4	33.34	33.25	33.40	33.38	16:20
90.0	79.5	90.3	81.1	91.3	82.0	84.51	84.57	85.21	84.76	0.06	40.1	40.7	40.6	40.5	33.42	33.31	33.36	33.43	16:21
90.0	79.5	90.4	81.1	91.2	82.0	84.52	84.59	85.20	84.77	0.06	40.2	40.7	40.6	40.5	33.40	33.28	33.32	33.40	16:22
90.1	79.5	90.3	81.1	91.3	82.0	84.52	84.56	85.21	84.76	0.07	40.2	40.6	40.4	40.4	33.27	33.16	33.23	33.27	16:23
89.9	79.4	90.5	81.2	91.3	82.1	84.50	84.61	85.23	84.78	0.07	40.2	40.7	40.5	40.5	33.31	33.19	33.28	33.28	16:24
90.0	79.4	90.4	81.1	91.4	82.2	84.53	84.61	85.26	84.80	0.07	40.2	40.7	40.6	40.5	33.38	33.24	33.31	33.35	16:25
90.0	79.5	90.4	81.1	91.3	82.1	84.53	84.61	85.25	84.80	0.08	40.0	40.6	40.5	40.4	33.45	33.31	33.37	33.38	16:26
90.0	79.5	90.3	81.1	91.3	82.0	84.50	84.57	85.21	84.76	0.08	40.2	40.6	40.6	40.5	33.36	33.21	33.28	33.35	16:27
90.0	79.4	90.5	81.1	91.4	82.2	84.52	84.63	85.24	84.79	0.08	40.1	40.7	40.4	40.4	33.42	33.26	33.33	33.34	16:28
90.0	79.4	90.4	81.1	91.3	82.2	84.52	84.61	85.23	84.79	0.08	40.2	40.7	40.5	40.5	33.38	33.25	33.31	33.35	16:29
90.0	79.5	90.4	81.2	91.4	82.1	84.52	84.62	85.22	84.79	0.08	40.2	40.7	40.6	40.5	33.42	33.28	33.33	33.39	16:30
90.1	79.5	90.3	81.1	91.2	82.0	84.52	84.57	85.21	84.77	0.08	40.2	40.6	40.5	40.5	33.33	33.25	33.38	33.39	16:31
90.1	79.4	90.3	81.1	91.4	82.1	84.50	84.58	85.25	84.78	0.08	40.2	40.7	40.5	40.5	33.37	33.24	33.31	33.36	16:32
90.1	79.5	90.3	81.1	91.3	82.1	84.53	84.58	85.24	84.78	0.08	40.2	40.8	40.7	40.6	33.34	33.24	33.38	33.41	16:33
90.1	79.5	90.3	81.1	91.3	82.1	84.53	84.59	85.25	84.79	0.08	40.3	40.8	40.6	40.5	33.44	33.32	33.34	33.45	16:34
90.1	79.5	90.3	81.0	91.3	82.1	84.53	84.59	85.22	84.78	0.08	40.1	40.6	40.5	40.4	33.33	33.23	33.36	33.36	16:35
90.1	79.5	90.3	81.1	91.3	82.0	84.52	84.58	85.21	84.77	0.08	40.2	40.8	40.5	40.5	33.43	33.27	33.30	33.40	16:36
90.0	79.5	90.5	81.2	91.3	82.2	84.55	84.64	85.26	84.82	0.08	40.2	40.7	40.5	40.5	33.40	33.22	33.27	33.32	16:37
90.0	79.5	90.5	81.1	91.3	82.1	84.53	84.61	85.23	84.79	0.08	40.2	40.7	40.6	40.5	33.36	33.22	33.26	33.32	16:38
90.0	79.5	90.4	81.1	91.2	82.0	84.56	84.61	85.19	84.78	0.08	40.3	40.7	40.6	40.5	33.44	33.24	33.30	33.38	16:39
90.1	79.5	90.3	81.0	91.3	82.1	84.54	84.57	85.23	84.78	0.08	40.3	40.7	40.5	40.5	33.44	33.26	33.32	33.43	16:40
90.0	79.5	90.4	81.2	91.4	82.1	84.53	84.63	85.23	84.80	0.09	40.3	40.8	40.5	40.5	33.42	33.22	33.28	33.36	16:41
90.1	79.6	90.3	81.1	91.3	82.1	84.56	84.58	85.23	84.79	0.09	40.3	40.7	40.6	40.6	33.39	33.19	33.26	33.38	16:42
90.1	79.5	90.3	81.1	91.4	82.1	84.53	84.58	85.26	84.79	0.09	40.4	40.8	40.6	40.6	33.34	33.16	33.22	33.34	16:43
90.0	79.5	90.4	81.2	91.3	82.0	84.53	84.60	85.22	84.79	0.09	40.2	40.8	40.7	40.6	33.40	33.26	33.25	33.39	16:44
90.1	79.5	90.3	81.1	91.3	82.1	84.54	84.59	85.25	84.79	0.08	40.3	40.8	40.7	40.6	33.50	33.35	33.33	33.50	16:45
90.0	79.5	90.4	81.2	91.4	82.1	84.55	84.63	85.24	84.81	0.08	40.2	40.8	40.6	40.5	33.42	33.29	33.38	33.42	16:46
90.1	79.5	90.4	81.1	91.3	82.2	84.55	84.63	85.27	84.82	0.08	40.3	40.7	40.5	40.5	33.48	33.29	33.26	33.40	16:47

COMMENTS

Tested By Cynthia L Goddard Date 6-2-93 Reviewed By Frank A. Deimey Date 6-2-93

AMPACITY TEST. JOB NUMBER 93-0501. SAMPLE NUMBER 93-0501-05 DATA FILE 3p3c6g05.001 06-20-1993

POSITION 1			POSITION 2			POSITION 3			POSITION AVERAGE			AVG		AMBIENT TEMPERATURE				AMPERES				
Tb	Tw	Tr	Tb	Tw	Tr	Tb	Tw	Tr	T1av	T2av	T3av	Twave	SLOPE	Tam1	Tam2	Tam3	Taav	Ib	Iw	Ir	I'	TIME
[illegible]	90.3	90.5	89.7	90.3	90.8	89.4	89.3	90.3	89.83	90.27	89.64	89.91	-0.03	39.9	40.2	40.3	40.1	63.96	63.92	64.18	64.30	12:51
88.5	90.3	90.6	89.8	90.4	90.8	89.2	89.0	90.4	89.77	90.31	89.54	89.87	-0.05	39.8	40.2	40.3	40.1	64.10	64.01	64.05	64.26	12:52
88.7	90.4	90.6	89.7	90.3	90.8	89.3	89.2	90.4	89.86	90.26	89.62	89.91	-0.06	39.8	40.2	40.3	40.1	64.10	63.96	64.06	64.27	12:53
88.6	90.3	90.4	89.8	90.5	90.9	89.4	89.1	90.2	89.78	90.39	89.57	89.92	-0.06	39.9	40.3	40.4	40.2	63.98	63.99	63.99	64.23	12:54
88.6	90.4	90.6	89.7	90.3	90.8	89.4	89.3	90.3	89.85	90.26	89.66	89.93	-0.07	39.9	40.3	40.3	40.2	64.15	64.13	64.15	64.43	12:55
88.5	90.2	90.5	89.8	90.5	90.8	89.1	89.0	90.4	89.74	90.38	89.50	89.87	-0.08	39.9	40.3	40.3	40.2	64.15	64.17	64.14	64.36	12:56
88.5	90.3	90.6	89.8	90.4	90.8	89.2	89.1	90.4	89.78	90.33	89.56	89.89	-0.09	39.8	40.2	40.4	40.1	64.19	64.17	64.23	64.40	12:57
88.5	90.2	90.6	89.9	90.5	90.9	89.2	89.0	90.4	89.78	90.44	89.51	89.91	-0.09	39.9	40.2	40.3	40.1	64.18	64.16	64.19	64.33	12:58
88.6	90.4	90.6	89.7	90.3	90.8	89.4	89.3	90.3	89.87	90.25	89.69	89.94	-0.09	39.8	40.3	40.3	40.1	64.25	64.13	64.10	64.44	12:59
88.5	90.3	90.6	89.8	90.5	90.9	89.2	89.0	90.4	89.78	90.41	89.53	89.91	-0.09	39.9	40.2	40.3	40.1	64.49	64.20	64.38	64.53	13:00
88.6	90.3	90.6	89.9	90.6	90.9	89.2	89.1	90.4	89.81	90.46	89.55	89.94	-0.08	39.9	40.3	40.4	40.2	64.27	64.22	64.18	64.39	13:01
88.7	90.4	90.5	89.7	90.4	90.9	89.4	89.3	90.3	89.86	90.31	89.67	89.95	-0.08	39.8	40.2	40.3	40.1	64.04	64.07	64.22	64.34	13:02
88.7	90.4	90.5	89.7	90.3	90.8	89.4	89.3	90.3	89.87	90.30	89.68	89.95	-0.07	39.8	40.2	40.4	40.1	64.48	64.33	64.16	64.58	13:03
88.6	90.3	90.5	89.8	90.4	90.8	89.3	89.3	90.4	89.80	90.32	89.67	89.93	-0.07	39.8	40.3	40.3	40.1	64.22	64.20	64.08	64.37	13:04
88.6	90.3	90.5	89.9	90.6	90.9	89.3	89.0	90.4	89.78	90.46	89.55	89.93	-0.07	39.8	40.2	40.3	40.1	64.21	64.08	63.80	64.17	13:05
88.5	90.3	90.6	89.8	90.4	90.9	89.3	89.1	90.3	89.82	90.39	89.56	89.93	-0.07	39.8	40.2	40.3	40.1	63.97	64.14	63.95	64.18	13:06
88.7	90.3	90.5	89.7	90.5	90.9	89.4	89.2	90.2	89.85	90.37	89.60	89.94	-0.07	39.8	40.2	40.3	40.1	64.02	64.18	63.97	64.25	13:07
88.5	90.4	90.6	89.7	90.4	90.7	89.2	89.2	90.4	89.86	90.27	89.60	89.91	-0.07	39.8	40.1	40.3	40.1	64.08	64.24	63.99	64.30	13:08
88.7	90.4	90.5	89.7	90.5	90.8	89.3	89.3	90.4	89.85	90.32	89.67	89.95	-0.07	39.8	40.2	40.3	40.1	63.84	64.07	64.09	64.20	13:09
88.6	90.3	90.5	89.9	90.6	90.9	89.3	89.0	90.4	89.78	90.46	89.58	89.94	-0.07	39.8	40.2	40.3	40.1	64.16	64.36	64.15	64.34	13:10
88.6	90.3	90.6	89.9	90.6	90.9	89.2	89.1	90.3	89.81	90.46	89.54	89.94	-0.07	39.8	40.2	40.3	40.1	63.84	64.10	64.05	64.13	13:11
88.6	90.3	90.5	89.8	90.6	90.9	89.3	89.1	90.3	89.80	90.46	89.56	89.94	-0.07	39.8	40.2	40.2	40.1	64.14	64.33	63.99	64.28	13:12
88.7	90.4	90.5	89.7	90.5	90.9	89.4	89.3	90.2	89.86	90.35	89.62	89.95	-0.07	39.8	40.1	40.2	40.0	64.07	64.29	63.86	64.24	13:13
88.6	90.3	90.4	89.8	90.6	90.9	89.3	89.1	90.3	89.76	90.43	89.53	89.91	-0.07	39.8	40.2	40.3	40.1	64.01	64.22	63.78	64.15	13:14
88.6	90.4	90.5	89.7	90.4	90.8	89.5	89.4	90.3	89.86	90.26	89.70	89.94	-0.06	39.7	40.1	40.3	40.1	64.16	64.40	63.93	64.39	13:15
88.6	90.3	90.5	89.8	90.6	90.9	89.4	89.2	90.3	89.82	90.44	89.62	89.96	-0.06	39.7	40.1	40.2	40.0	64.44	64.47	64.17	64.47	13:16
88.7	90.4	90.5	89.9	90.5	90.9	89.4	89.1	90.3	89.88	90.43	89.59	89.97	-0.06	39.7	40.1	40.2	40.0	64.31	64.38	64.10	64.35	13:17
88.7	90.5	90.6	89.7	90.4	90.9	89.3	89.4	90.3	89.92	90.33	89.67	89.97	-0.05	39.7	40.0	40.2	40.0	64.36	64.50	64.41	64.57	13:18
88.7	90.3	90.5	89.9	90.6	91.0	89.3	89.1	90.4	89.84	90.52	89.61	89.99	-0.04	39.7	40.1	40.2	40.0	64.46	64.55	64.24	64.44	13:19
88.8	90.5	90.6	89.8	90.4	90.8	89.4	89.4	90.3	89.96	90.35	89.71	90.01	-0.04	39.7	40.0	40.2	40.0	64.28	64.38	64.31	64.45	13:20
88.7	90.4	90.6	89.9	90.7	91.0	89.4	89.2	90.4	89.89	90.54	89.64	90.02	-0.03	39.8	40.0	40.2	40.0	64.52	64.56	64.28	64.50	13:21
88.7	90.4	90.7	89.8	90.7	90.9	89.5	89.5	90.4	89.93	90.47	89.79	90.06	-0.01	39.7	40.1	40.2	40.0	64.19	64.23	64.11	64.28	13:22
88.6	90.4	90.6	89.9	90.5	90.8	89.4	89.2	90.5	89.88	90.40	89.70	89.99	-0.01	39.8	40.1	40.2	40.0	64.33	64.31	64.15	64.34	13:23
[illegible]	90.4	90.7	90.0	90.7	91.0	89.5	89.2	90.4	89.92	90.55	89.69	90.05	0.00	39.7	40.1	40.2	40.0	64.28	64.27	64.11	64.23	13:24
[illegible]	90.4	90.6	89.8	90.5	90.8	89.4	89.3	90.5	89.95	90.39	89.73	90.02	0.01	39.7	40.1	40.1	40.0	64.18	64.20	64.02	64.22	13:25
88.6	90.3	90.6	89.9	90.6	90.9	89.3	89.2	90.5	89.84	90.50	89.63	89.99	0.01	39.7	40.1	40.1	40.0	64.18	64.15	63.98	64.12	13:26
88.7	90.3	90.5	89.9	90.6	91.0	89.4	89.1	90.3	89.86	90.50	89.62	89.99	0.01	39.7	40.0	40.2	40.0	63.99	64.08	64.06	64.09	13:27
88.6	90.5	90.6	89.7	90.3	90.8	89.4	89.4	90.4	89.91	90.28	89.74	89.97	0.01	39.7	40.1	40.2	40.0	64.00	63.99	63.86	64.07	13:28
88.6	90.3	90.5	89.8	90.4	90.8	89.4	89.1	90.4	89.81	90.33	89.65	89.93	0.00	39.7	40.1	40.2	40.0	63.93	64.01	64.07	64.10	13:29
88.6	90.3	90.6	89.9	90.4	90.8	89.2	89.1	90.4	89.86	90.38	89.61	89.95	0.00	39.7	40.0	40.1	40.0	64.11	64.16	63.96	64.12	13:30
88.5	90.3	90.5	89.9	90.5	90.8	89.4	89.1	90.4	89.79	90.41	89.64	89.95	0.01	39.7	40.0	40.1	39.9	64.14	64.18	63.99	64.14	13:31
88.7	90.4	90.6	89.8	90.5	91.0	89.4	89.2	90.3	89.89	90.44	89.65	89.99	0.01	39.7	40.1	40.2	40.0	64.18	64.19	64.06	64.24	13:32
88.7	90.4	90.6	89.8	90.5	91.0	89.3	89.2	90.3	89.88	90.43	89.61	89.97	0.02	39.7	40.0	40.2	40.0	64.20	64.23	64.12	64.27	13:33
88.7	90.4	90.6	89.7	90.4	90.9	89.4	89.4	90.3	89.92	90.34	89.70	89.99	0.03	39.6	40.0	40.1	39.9	64.11	64.17	64.05	64.21	13:34
88.6	90.4	90.6	89.7	90.3	90.8	89.5	89.3	90.3	89.86	90.25	89.70	89.94	0.03	39.6	40.0	40.2	40.0	63.88	63.94	63.90	64.06	13:35
88.6	90.3	90.5	89.8	90.6	91.0	89.4	89.1	90.3	89.82	90.43	89.61	89.95	0.03	39.7	40.0	40.2	39.9	63.70	63.83	63.92	63.89	13:36
88.5	90.2	90.5	89.8	90.5	90.9	89.3	89.0	90.3	89.76	90.41	89.54	89.90	0.04	39.7	40.1	40.1	40.0	63.96	63.98	63.85	64.01	13:37
88.5	90.4	90.6	89.6	90.3	90.7	89.4	89.3	90.3	89.83	90.20	89.67	89.90	0.04	39.7	40.0	40.2	40.0	63.76	63.85	63.93	64.03	13:38
88.5	90.2	90.5	89.8	90.5	90.9	89.3	89.0	90.3	89.73	90.39	89.55	89.89	0.04	39.7	40.0	40.1	39.9	64.00	64.06	63.89	64.04	13:39
88.5	90.2	90.4	89.8	90.5	90.9	89.3	89.0	90.2	89.72	90.39	89.50	89.87	0.03	39.7	40.0	40.1	39.9	63.87	63.90	63.76	63.93	13:40
88.6	90.2	90.5	89.8	90.5	90.9	89.2	89.1	90.3	89.77	90.40	89.50	89.89	0.03	39.6	40.0	40.2	39.9	64.18	64.26	64.04	64.23	13:41
88.6	90.3	90.4	89.6	90.4	90.8	89.4	89.3	90.2	89.77	90.26	89.61	89.88	0.03	39.7	40.0	40.2	40.0	64.04	64.10	63.91	64.19	13:42
88.5	90.3	90.4	89.6	90.2	90.7	89.4	89.3	90.3	89.75	90.16	89.64	89.85	0.02	39.7	40.1	40.1	40.0	64.17	64.23	64.05	64.35	13:43
88.6	90.2	90.4	89.8	90.5	90.9	89.3	89.0	90.2	89.74	90.38	89.50	89.87	0.01	39.7	40.1	40.2	40.0	64.22	64.36	64.13	64.35	13:44
88.6	90.3	90.5	89.6	90.4	90.8	89.3	89.3	90.2	89.80	90.27	89.61	89.89	0.01	39.7	40.1	40.2	40.0	64.04	64.22	64.22	64.35	13:45
88.6	90.3	90.4	89.7	90.4	90.8	89.4	89.3	90.2	89.77	90.30	89.63	89.90	0.01	39.7	40.1	40.2	40.0	64.20	64.29	64.12	64.39	13:46
88.6	90.4	90.5	89.6	90.3	90.8	89.3	89.3	90.3	89.82	90.22	89.63	89.89	0.00	39.7	40.1	40.2	40.0	63.98	64.15	64.16	64.29	13:47
88.5	90.2	90.5	89.8	90.4	90.8	89.1	89.0	90.4	89.72	90.34	89.51	89.86	-0.00	39.7	40.0	40.2	40.0	64.14	64.20	64.02	64.22	13:48
88.5	90.2	90.5	89.8	90.5	90.9	89.2	89.0	90.3	89.72	90.38	89.50	89.87	-0.01	39.7	40.0	40.1	39.9	64.00	64.12	63.89	64.09	13:49
88.5	90.3	90.5	89.8	90.4	90.8	89.2	89.0	90.3	89.75	90.30	89.51	89.86	-0.02	39.7	40.1	40.2	40.0	63.94	64.00	63.80	64.03	13:50

COMMENTS _____

Tested By Frank A. Denney Date 6-20-93 Reviewed By C L Rutledge Date 6-21-93

AMPACITY TEST. JOB NUMBER 93-0501. SAMPLE NUMBER 93-0501-05 DATA FILE 3p3c6g05.001 06-20-1993

POSITION 1			POSITION 2			POSITION 3			POSITION AVERAGE			AVG		AMBIENT TEMPERATURE				AMPERES				
Tb	Tw	Tr	Tb	Tw	Tr	Tb	Tw	Tr	T1av	T2av	T3av	Twave	SLOPE	Tam1	Tam2	Tam3	Taav	Ib	Iw	Ir	I'	TIME
88.[illegible]	90.3	90.5	89.6	90.3	90.8	89.3	89.2	90.2	89.81	90.24	89.56	89.87	-0.03	39.6	40.0	40.2	40.0	64.04	64.05	63.91	64.17	13:51
88.5	90.3	90.6	89.8	90.4	90.7	89.3	89.0	90.4	89.76	90.28	89.56	89.87	-0.05	39.7	40.1	40.1	40.0	64.26	64.27	64.08	64.32	13:52
88.6	90.3	90.5	89.8	90.5	90.9	89.4	89.1	90.2	89.79	90.38	89.56	89.91	-0.05	39.7	40.0	40.2	40.0	64.20	64.19	64.02	64.24	13:53
88.6	90.2	90.4	89.7	90.5	90.9	89.3	89.1	90.2	89.75	90.36	89.52	89.88	-0.06	39.7	40.1	40.2	40.0	63.92	63.92	64.02	64.08	13:54
88.6	90.3	90.5	89.6	90.3	90.7	89.2	89.3	90.2	89.82	90.19	89.57	89.86	-0.06	39.7	40.1	40.2	40.0	64.08	64.14	64.01	64.28	13:55
88.6	90.2	90.4	89.7	90.4	90.8	89.3	89.1	90.2	89.74	90.33	89.50	89.86	-0.08	39.7	40.0	40.2	40.0	63.92	64.01	63.90	64.09	13:56
88.6	90.3	90.5	89.6	90.3	90.8	89.3	89.3	90.2	89.79	90.24	89.59	89.87	-0.09	39.7	40.0	40.2	40.0	64.21	64.27	64.15	64.40	13:57
88.5	90.3	90.4	89.6	90.2	90.7	89.2	89.2	90.3	89.75	90.14	89.55	89.81	-0.10	39.7	40.1	40.2	40.0	64.22	64.32	64.19	64.47	13:58
88.5	90.3	90.5	89.6	90.2	90.7	89.3	89.3	90.3	89.77	90.14	89.61	89.84	-0.11	39.7	40.1	40.2	40.0	64.10	64.24	64.13	64.38	13:59
88.5	90.2	90.4	89.8	90.5	90.9	89.3	89.0	90.3	89.70	90.39	89.56	89.88	-0.12	39.7	40.1	40.2	40.0	64.34	64.39	64.24	64.42	14:00
88.6	90.3	90.4	89.7	90.4	90.8	89.4	89.2	90.2	89.78	90.30	89.61	89.90	-0.12	39.7	40.0	40.2	40.0	64.13	64.20	64.26	64.37	14:01
88.6	90.4	90.5	89.6	90.3	90.8	89.4	89.3	90.3	89.81	90.23	89.68	89.91	-0.12	39.7	40.1	40.2	40.0	64.38	64.44	64.26	64.55	14:02
88.5	90.3	90.6	89.8	90.4	90.7	89.2	89.1	90.4	89.78	90.30	89.57	89.88	-0.12	39.7	40.1	40.2	40.0	64.25	64.39	64.39	64.45	14:03
88.5	90.4	90.6	89.7	90.3	90.7	89.3	89.3	90.4	89.84	90.25	89.66	89.92	-0.12	39.7	40.1	40.2	40.0	64.44	64.45	64.24	64.52	14:04
88.5	90.3	90.5	89.8	90.4	90.8	89.3	89.2	90.5	89.75	90.37	89.65	89.92	-0.12	39.7	40.1	40.2	40.0	64.44	64.46	64.24	64.47	14:05
88.5	90.3	90.5	89.9	90.5	90.9	89.4	89.1	90.4	89.77	90.43	89.64	89.95	-0.12	39.7	40.0	40.2	40.0	64.40	64.42	64.21	64.38	14:06
88.6	90.4	90.6	89.9	90.5	90.8	89.4	89.3	90.5	89.86	90.38	89.73	89.99	-0.11	39.7	40.1	40.2	40.0	64.60	64.60	64.36	64.58	14:07
88.6	90.3	90.5	89.9	90.6	91.0	89.4	89.1	90.4	89.83	90.52	89.66	90.00	-0.10	39.7	40.1	40.2	40.0	64.55	64.63	64.32	64.54	14:08
88.6	90.3	90.6	89.9	90.6	90.9	89.4	89.2	90.5	89.85	90.44	89.69	89.99	-0.10	39.7	40.0	40.2	40.0	64.19	64.24	64.11	64.21	14:09
88.7	90.4	90.6	89.8	90.6	91.0	89.4	89.2	90.4	89.90	90.48	89.65	90.01	-0.09	39.7	40.1	40.2	40.0	63.97	64.12	64.22	64.19	14:10
88.7	90.5	90.6	89.7	90.4	90.8	89.4	89.4	90.4	89.93	90.30	89.71	89.98	-0.08	39.6	40.1	40.2	40.0	64.11	64.16	64.04	64.26	14:11
88.7	90.3	90.5	89.8	90.6	91.0	89.4	89.2	90.3	89.83	90.46	89.63	89.98	-0.07	39.8	40.2	40.3	40.1	64.11	64.18	64.25	64.31	14:12
88.7	90.3	90.6	89.9	90.6	91.0	89.4	89.2	90.4	89.86	90.50	89.64	90.00	-0.07	39.7	40.1	40.2	40.0	64.38	64.40	64.31	64.43	14:13
88.6	90.4	90.7	89.7	90.3	90.8	89.4	89.4	90.5	89.88	90.28	89.73	89.96	-0.07	39.7	40.1	40.2	40.0	64.46	64.46	64.38	64.56	14:14
88.6	90.4	90.6	89.7	90.4	90.8	89.5	89.4	90.4	89.86	90.28	89.79	89.98	-0.06	39.7	40.1	40.2	40.0	64.56	64.74	64.28	64.68	14:15
88.7	90.5	90.6	89.7	90.4	90.9	89.5	89.5	90.3	89.93	90.34	89.77	90.01	-0.05	39.7	40.1	40.2	40.0	64.54	64.70	64.26	64.67	14:16
88.6	90.4	90.5	89.9	90.6	90.9	89.4	89.2	90.5	89.84	90.49	89.70	90.01	-0.04	39.7	40.1	40.2	40.0	64.41	64.57	64.09	64.38	14:17
88.6	90.4	90.5	89.8	90.4	90.8	89.4	89.4	90.5	89.86	90.36	89.76	89.99	-0.03	39.7	40.1	40.2	40.0	64.28	64.29	64.13	64.34	14:18
88.6	90.4	90.6	89.8	90.4	90.8	89.4	89.4	90.5	89.85	90.33	89.75	89.98	-0.02	39.7	40.1	40.2	40.0	64.02	64.11	64.21	64.22	14:19
88.6	90.5	90.5	89.7	90.4	90.8	89.6	89.4	90.4	89.88	90.31	89.80	90.00	-0.01	39.7	40.1	40.2	40.0	64.18	64.22	64.09	64.32	14:20
88.7	90.3	90.5	89.9	90.6	91.0	89.4	89.1	90.4	89.82	90.50	89.62	89.98	0.01	39.7	40.1	40.2	40.0	63.93	64.07	64.15	64.14	14:21
88.6	90.4	90.7	89.8	90.4	90.8	89.3	89.3	90.5	89.90	90.31	89.70	89.97	0.02	39.7	40.1	40.2	40.0	64.24	64.30	64.14	64.35	14:22
88.5	90.4	90.6	89.8	90.4	90.8	89.3	89.2	90.5	89.82	90.33	89.69	89.95	0.03	39.7	40.1	40.3	40.0	64.16	64.20	64.09	64.27	14:23
8[illegible]	90.3	90.5	89.8	90.5	91.0	89.5	89.2	90.3	89.81	90.44	89.66	89.97	0.05	39.7	40.1	40.3	40.0	64.08	64.17	64.05	64.22	14:24
8[illegible]	90.3	90.5	89.8	90.6	91.0	89.2	89.1	90.3	89.82	90.46	89.57	89.95	0.06	39.7	40.1	40.3	40.0	64.08	64.16	64.06	64.21	14:25
88.6	90.4	90.5	89.6	90.3	90.8	89.4	89.4	90.4	89.85	90.23	89.71	89.93	0.06	39.7	40.1	40.2	40.0	63.87	64.04	64.20	64.24	14:26
88.5	90.3	90.5	89.8	90.4	90.8	89.4	89.2	90.4	89.76	90.33	89.67	89.92	0.07	39.8	40.1	40.3	40.0	64.10	64.23	64.18	64.33	14:27
88.6	90.3	90.5	89.7	90.5	91.0	89.4	89.2	90.3	89.83	90.40	89.62	89.95	0.08	39.7	40.1	40.2	40.0	63.94	64.12	64.33	64.28	14:28
88.7	90.4	90.6	89.7	90.5	90.9	89.4	89.3	90.3	89.87	90.37	89.69	89.98	0.08	39.8	40.2	40.2	40.1	64.06	64.27	64.24	64.40	14:29
88.5	90.2	90.5	89.8	90.6	91.0	89.3	89.1	90.4	89.76	90.46	89.60	89.94	0.08	39.7	40.1	40.3	40.0	64.08	64.32	64.23	64.33	14:30
88.6	90.3	90.6	89.8	90.6	91.0	89.2	89.1	90.4	89.80	90.45	89.56	89.94	0.09	39.8	40.1	40.3	40.1	64.10	64.36	64.28	64.39	14:31
88.6	90.3	90.6	89.8	90.6	91.0	89.3	89.2	90.3	89.82	90.47	89.64	89.98	0.10	39.7	40.1	40.3	40.0	63.96	64.16	64.12	64.20	14:32
88.5	90.4	90.6	89.7	90.3	90.7	89.3	89.3	90.4	89.82	90.22	89.71	89.92	0.10	39.7	40.1	40.2	40.0	64.03	64.22	63.99	64.29	14:33
88.5	90.2	90.4	89.8	90.5	90.9	89.3	89.1	90.4	89.72	90.39	89.59	89.90	0.11	39.8	40.1	40.3	40.1	63.92	64.08	63.83	64.09	14:34
88.4	90.2	90.4	89.7	90.3	90.7	89.2	89.1	90.4	89.67	90.26	89.56	89.83	0.10	39.8	40.2	40.3	40.1	63.51	63.73	63.74	63.88	14:35
88.4	90.2	90.4	89.7	90.4	90.7	89.2	88.9	90.3	89.65	90.30	89.47	89.81	0.09	39.8	40.2	40.2	40.0	63.70	63.80	63.63	63.88	14:36
88.5	90.2	90.4	89.7	90.4	90.8	89.1	88.9	90.3	89.68	90.33	89.42	89.81	0.08	39.7	40.1	40.3	40.0	63.85	64.02	64.02	64.12	14:37
88.5	90.2	90.4	89.7	90.4	90.8	89.3	88.9	90.2	89.69	90.33	89.48	89.83	0.07	39.8	40.2	40.3	40.1	64.18	64.25	64.10	64.37	14:38
88.6	90.2	90.4	89.7	90.5	90.9	89.1	89.1	90.2	89.75	90.34	89.47	89.85	0.06	39.8	40.1	40.3	40.0	64.14	64.19	64.07	64.33	14:39
88.4	90.2	90.4	89.7	90.4	90.8	89.2	89.0	90.4	89.69	90.30	89.52	89.84	0.04	39.7	40.1	40.3	40.0	64.27	64.35	64.17	64.44	14:40
88.6	90.4	90.5	89.6	90.3	90.7	89.2	89.3	90.2	89.81	90.19	89.56	89.86	0.04	39.8	40.2	40.3	40.1	64.32	64.36	64.20	64.58	14:41
88.5	90.3	90.5	89.6	90.3	90.8	89.5	89.3	90.3	89.78	90.20	89.69	89.89	0.03	39.8	40.1	40.3	40.1	64.41	64.44	64.31	64.65	14:42
88.6	90.4	90.5	89.6	90.3	90.7	89.4	89.3	90.3	89.83	90.20	89.70	89.91	0.02	39.8	40.2	40.2	40.0	64.26	64.38	64.20	64.53	14:43
88.5	90.3	90.5	89.8	90.5	90.8	89.2	89.1	90.4	89.77	90.38	89.54	89.90	0.02	39.8	40.1	40.3	40.1	63.96	64.13	64.24	64.26	14:44
88.5	90.2	90.5	89.8	90.5	90.9	89.4	89.1	90.3	89.75	90.41	89.60	89.92	0.01	39.8	40.2	40.3	40.1	64.19	64.28	64.18	64.37	14:45
88.6	90.4	90.5	89.7	90.4	90.8	89.4	89.3	90.3	89.84	90.29	89.66	89.93	0.01	39.8	40.2	40.3	40.1	64.22	64.33	64.15	64.48	14:46
88.5	90.3	90.5	89.7	90.3	90.7	89.2	89.2	90.4	89.77	90.25	89.62	89.88	0.01	39.8	40.2	40.3	40.1	64.22	64.31	64.14	64.43	14:47
88.5	90.3	90.5	89.8	90.4	90.8	89.4	89.1	90.4	89.73	90.31	89.65	89.90	-0.00	39.8	40.2	40.3	40.1	64.18	64.29	64.12	64.38	14:48
88.5	90.3	90.6	89.8	90.4	90.8	89.2	89.1	90.4	89.78	90.35	89.58	89.91	-0.01	39.8	40.2	40.3	40.1	64.21	64.36	64.18	64.43	14:49
88.5	90.3	90.5	89.7	90.3	90.7	89.3	89.2	90.4	89.80	90.26	89.66	89.91	-0.02	39.8	40.2	40.3	40.1	64.20	64.34	64.20	64.48	14:50

COMMENTS _____

Tested By Frank A. Dewey Date 6-20-93 Reviewed By C.L. Rutledge Date 6-21-93

AMPACITY TEST. JOB NUMBER 93-0501. SAMPLE NUMBER 93-0501-05 DATA FILE 3p3c6g05.001 06-20-1993

POSITION 1			POSITION 2			POSITION 3			POSITION AVERAGE			AVG		AMBIENT TEMPERATURE				AMPERES				
Tb	Tw	Tr	Tb	Tw	Tr	Tb	Tw	Tr	T1av	T2av	T3av	Twave	SLOPE	Tam1	Tam2	Tam3	Taav	Ib	Iw	Ir	I'	TIME
88[illegible]	[illegible].3	90.6	89.8	90.5	90.9	89.4	89.1	90.4	89.79	90.40	89.67	89.95	-0.02	39.8	40.2	40.3	40.1	64.02	64.24	64.36	64.37	14:51
88.7	90.4	90.6	89.7	90.5	91.0	89.4	89.3	90.3	89.86	90.40	89.68	89.98	-0.02	39.9	40.2	40.3	40.1	64.22	64.34	64.26	64.50	14:52
88.7	90.3	90.6	89.8	90.6	91.0	89.5	89.2	90.3	89.85	90.45	89.67	89.99	-0.01	39.8	40.2	40.3	40.1	63.92	64.07	64.20	64.24	14:53
88.6	90.4	90.6	89.7	90.3	90.8	89.4	89.4	90.4	89.88	90.25	89.75	89.96	-0.02	39.8	40.2	40.3	40.1	64.34	64.38	64.34	64.61	14:54
88.6	90.3	90.5	89.9	90.6	90.9	89.2	89.1	90.4	89.78	90.45	89.56	89.93	-0.02	39.8	40.2	40.3	40.1	64.27	64.33	64.21	64.40	14:55
88.7	90.3	90.5	89.8	90.5	91.0	89.3	89.3	90.3	89.83	90.40	89.66	89.96	-0.03	39.8	40.2	40.3	40.1	64.32	64.36	64.24	64.50	14:56
88.5	90.3	90.5	89.8	90.4	90.8	89.3	89.2	90.5	89.75	90.34	89.64	89.91	-0.03	39.8	40.2	40.3	40.1	64.19	64.22	64.11	64.35	14:57
88.6	90.2	90.5	89.9	90.6	91.0	89.4	89.2	90.4	89.75	90.47	89.66	89.96	-0.04	39.8	40.1	40.3	40.1	63.88	63.98	64.10	64.10	14:58
88.6	90.4	90.5	89.7	90.3	90.8	89.5	89.4	90.3	89.85	90.28	89.74	89.96	-0.05	39.8	40.2	40.3	40.1	64.29	64.34	64.22	64.51	14:59
88.6	90.3	90.5	89.9	90.6	90.9	89.2	89.1	90.4	89.78	90.43	89.58	89.93	-0.05	39.8	40.2	40.3	40.1	64.09	64.24	64.36	64.36	15:00
88.6	90.3	90.5	89.9	90.6	91.0	89.4	89.2	90.4	89.78	90.46	89.67	89.97	-0.06	39.8	40.2	40.3	40.1	64.16	64.27	64.20	64.36	15:01
88.6	90.3	90.5	89.8	90.6	91.0	89.4	89.2	90.3	89.78	90.47	89.64	89.96	-0.06	39.8	40.2	40.3	40.1	64.18	64.22	64.18	64.36	15:02
88.7	90.3	90.5	89.7	90.5	90.9	89.3	89.3	90.3	89.82	90.39	89.65	89.95	-0.06	39.8	40.2	40.3	40.1	64.18	64.26	64.19	64.40	15:03
88.6	90.4	90.5	89.7	90.3	90.8	89.3	89.3	90.4	89.82	90.25	89.68	89.92	-0.06	39.8	40.2	40.3	40.1	64.13	64.20	64.17	64.39	15:04
88.6	90.3	90.5	89.9	90.6	90.9	89.2	89.0	90.4	89.78	90.46	89.57	89.94	-0.07	39.8	40.2	40.3	40.1	64.10	64.16	64.16	64.26	15:05
88.7	90.3	90.5	89.8	90.5	91.0	89.3	89.2	90.3	89.85	90.40	89.61	89.95	-0.06	39.8	40.2	40.3	40.1	64.14	64.12	64.12	64.32	15:06
88.6	90.4	90.6	89.6	90.3	90.8	89.3	89.3	90.4	89.88	90.25	89.67	89.93	-0.06	39.8	40.2	40.3	40.1	63.85	63.93	64.11	64.22	15:07
88.6	90.4	90.6	89.7	90.3	90.7	89.4	89.3	90.4	89.84	90.23	89.71	89.93	-0.05	39.8	40.2	40.3	40.1	64.12	64.20	64.10	64.38	15:08
88.6	90.3	90.6	89.8	90.6	91.0	89.4	89.1	90.4	89.81	90.45	89.65	89.97	-0.04	39.8	40.2	40.3	40.1	64.02	64.07	64.00	64.15	15:09
88.7	90.4	90.6	89.7	90.4	90.9	89.5	89.3	90.3	89.87	90.32	89.70	89.96	-0.03	39.8	40.1	40.3	40.0	64.17	64.21	64.13	64.38	15:10
88.6	90.4	90.6	89.7	90.3	90.8	89.3	89.3	90.4	89.85	90.25	89.66	89.92	-0.03	39.7	40.1	40.2	40.0	64.25	64.30	64.19	64.42	15:11
88.6	90.3	90.5	89.8	90.5	91.0	89.5	89.2	90.3	89.81	90.43	89.68	89.97	-0.02	39.8	40.2	40.3	40.1	64.39	64.45	64.33	64.54	15:12
88.6	90.3	90.6	89.8	90.5	90.9	89.4	89.1	90.4	89.80	90.42	89.65	89.96	-0.01	39.8	40.1	40.2	40.0	64.22	64.24	64.18	64.31	15:13
88.7	90.4	90.5	89.7	90.5	90.9	89.4	89.3	90.3	89.83	90.37	89.69	89.96	-0.01	39.8	40.2	40.2	40.1	63.90	63.93	64.14	64.18	15:14
88.6	90.4	90.6	89.7	90.3	90.8	89.3	89.3	90.4	89.89	90.24	89.67	89.93	-0.00	39.7	40.1	40.2	40.0	64.07	64.11	64.06	64.25	15:15
88.6	90.4	90.6	89.7	90.4	90.8	89.4	89.3	90.3	89.88	90.29	89.68	89.95	0.01	39.7	40.1	40.2	40.0	63.83	63.98	64.12	64.17	15:16
88.6	90.3	90.6	89.8	90.6	91.0	89.3	89.1	90.3	89.80	90.46	89.58	89.95	0.02	39.7	40.0	40.2	40.0	64.07	64.17	64.07	64.18	15:17
88.5	90.3	90.5	89.8	90.4	90.8	89.3	89.2	90.5	89.76	90.33	89.67	89.92	0.02	39.8	40.1	40.2	40.0	64.24	64.21	64.16	64.31	15:18
88.7	90.4	90.5	89.7	90.4	90.9	89.4	89.3	90.3	89.83	90.33	89.68	89.94	0.03	39.8	40.1	40.2	40.0	64.12	64.10	64.04	64.27	15:19
88.6	90.3	90.5	89.8	90.6	90.9	89.4	89.1	90.4	89.80	90.44	89.63	89.96	0.04	39.8	40.0	40.2	40.0	64.03	63.99	64.00	64.09	15:20
88.6	90.2	90.5	89.8	90.5	90.9	89.3	89.1	90.4	89.74	90.43	89.61	89.93	0.04	39.7	40.0	40.1	40.0	63.96	64.03	64.18	64.12	15:21
88.6	90.3	90.4	89.7	90.4	90.9	89.4	89.3	90.3	89.79	90.30	89.67	89.92	0.04	39.7	40.0	40.1	40.0	64.09	64.10	64.05	64.24	15:22
88.6	90.4	90.5	89.6	90.3	90.7	89.3	89.4	90.3	89.80	90.20	89.66	89.89	0.04	39.7	40.0	40.1	40.0	63.97	64.08	64.22	64.29	15:23
88[illegible]	[illegible]0.4	90.4	89.6	90.3	90.8	89.2	89.3	90.3	89.80	90.23	89.61	89.88	0.04	39.7	40.0	40.1	40.0	64.02	64.10	64.03	64.24	15:24
88[illegible]	[illegible]0.3	90.5	89.7	90.3	90.7	89.3	89.1	90.4	89.76	90.23	89.61	89.86	0.04	39.7	40.0	40.2	40.0	64.15	64.19	64.13	64.30	15:25
88.5	90.3	90.6	89.8	90.5	90.8	89.4	89.1	90.5	89.77	90.40	89.67	89.94	0.04	39.6	40.0	40.1	39.9	64.24	64.25	64.23	64.29	15:26
88.6	90.4	90.5	89.7	90.3	90.8	89.3	89.4	90.4	89.82	90.24	89.70	89.92	0.04	39.7	40.0	40.1	39.9	64.25	64.25	64.25	64.39	15:27
88.6	90.2	90.5	89.8	90.6	90.9	89.4	89.0	90.4	89.74	90.44	89.60	89.93	0.05	39.7	40.0	40.1	40.0	64.29	64.35	64.30	64.37	15:28
88.6	90.3	90.6	89.9	90.6	91.0	89.4	89.2	90.4	89.80	90.48	89.67	89.98	0.06	39.7	40.0	40.1	39.9	64.21	64.30	64.26	64.30	15:29
88.7	90.4	90.6	89.7	90.3	90.8	89.3	89.3	90.4	89.87	90.27	89.66	89.93	0.06	39.7	40.0	40.1	39.9	64.04	64.13	64.33	64.32	15:30
88.5	90.3	90.6	89.8	90.3	90.8	89.4	89.2	90.5	89.82	90.28	89.69	89.93	0.06	39.6	40.0	40.1	39.9	64.20	64.27	64.22	64.32	15:31
88.5	90.3	90.6	89.9	90.5	90.9	89.3	89.1	90.5	89.81	90.42	89.63	89.95	0.07	39.7	40.0	40.2	39.9	64.12	64.15	64.18	64.19	15:32
88.5	90.3	90.7	89.8	90.4	90.8	89.4	89.2	90.5	89.81	90.37	89.70	89.96	0.07	39.6	40.0	40.1	39.9	64.09	64.11	64.11	64.15	15:33
88.6	90.4	90.6	89.7	90.3	90.7	89.3	89.3	90.4	89.86	90.23	89.69	89.93	0.07	39.7	40.0	40.1	39.9	64.11	64.18	64.14	64.28	15:34
88.5	90.3	90.7	89.8	90.4	90.8	89.4	89.2	90.5	89.85	90.33	89.68	89.95	0.07	39.7	40.0	40.1	39.9	64.28	64.28	64.25	64.35	15:35
88.6	90.3	90.6	89.9	90.6	91.0	89.4	89.2	90.4	89.84	90.47	89.67	89.99	0.06	39.7	40.0	40.1	39.9	64.28	64.30	64.27	64.31	15:36
88.6	90.4	90.6	89.7	90.3	90.8	89.3	89.3	90.4	89.88	90.26	89.68	89.94	0.05	39.7	40.0	40.1	39.9	64.24	64.28	64.43	64.46	15:37
88.6	90.4	90.6	89.7	90.3	90.8	89.4	89.3	90.5	89.88	90.27	89.71	89.95	0.04	39.7	40.0	40.2	39.9	64.33	64.28	64.24	64.40	15:38
88.6	90.4	90.6	89.7	90.3	90.8	89.4	89.3	90.5	89.86	90.27	89.74	89.96	0.04	39.6	40.0	40.1	39.9	64.16	64.12	64.31	64.28	15:39
88.6	90.3	90.7	89.9	90.5	90.9	89.3	89.1	90.5	89.85	90.42	89.64	89.97	0.03	39.6	40.0	40.1	39.9	64.39	64.23	64.28	64.31	15:40
88.6	90.3	90.7	89.9	90.6	91.0	89.5	89.1	90.5	89.86	90.49	89.71	90.02	0.03	39.6	40.0	40.1	39.9	64.38	64.21	64.24	64.26	15:41
88.6	90.3	90.6	89.9	90.6	91.0	89.5	89.2	90.4	89.83	90.48	89.68	90.00	0.03	39.7	40.0	40.1	39.9	64.25	64.23	64.12	64.21	15:42
88.6	90.4	90.5	89.7	90.3	90.8	89.4	89.4	90.4	89.86	90.28	89.74	89.96	0.03	39.6	40.0	40.1	39.9	64.17	64.28	64.17	64.32	15:43
88.5	90.3	90.5	89.8	90.4	90.8	89.4	89.2	90.5	89.79	90.34	89.71	89.94	0.02	39.7	40.0	40.1	39.9	64.12	64.24	64.36	64.31	15:44
88.6	90.4	90.6	89.7	90.4	90.9	89.3	89.4	90.4	89.88	90.30	89.72	89.97	0.03	39.6	40.0	40.1	39.9	64.09	64.20	64.16	64.26	15:45
88.6	90.3	90.5	89.9	90.6	91.0	89.4	89.1	90.5	89.79	90.49	89.65	89.98	0.03	39.7	40.0	40.1	39.9	64.03	64.23	64.43	64.25	15:46
88.6	90.3	90.6	89.8	90.6	90.9	89.5	89.1	90.5	89.82	90.44	89.70	89.99	0.02	39.6	40.0	40.0	39.9	64.14	64.24	64.21	64.21	15:47
88.5	90.3	90.6	89.8	90.5	90.9	89.3	89.1	90.5	89.81	90.39	89.65	89.95	0.02	39.7	40.0	40.1	39.9	64.02	64.14	64.16	64.16	15:48
88.7	90.4	90.6	89.7	90.5	91.0	89.3	89.2	90.3	89.88	90.38	89.58	89.95	0.02	39.6	40.0	40.1	39.9	64.06	64.10	64.21	64.23	15:49
88.6	90.4	90.6	89.6	90.3	90.8	89.3	89.3	90.4	89.89	90.26	89.67	89.94	0.01	39.6	40.0	40.1	39.9	63.96	64.06	64.12	64.19	15:50

COMMENTS _____

Tested By Frank A. Dewey Date 6-20-93 Reviewed By C L Rutledge Date 6-21-93

POSITION 1			POSITION 2			POSITION 3			POSITION AVERAGE			AVG		AMBIENT TEMPERATURE				AMPERES				
Tb	Tw	Tr	Tb	Tw	Tr	Tb	Tw	Tr	T1av	T2av	T3av	Twave	SLOPE	Tam1	Tam2	Tam3	Taav	Ib	Iw	Ir	I'	TIME
[illegible]	88.6	90.2	89.4	89.9	84.4	88.7	90.5	91.1	88.93	87.89	90.08	88.97	0.00	39.1	39.2	39.1	39.1	63.39	63.40	63.24	63.10	08:33
88.1	88.7	90.2	89.3	89.6	84.4	88.8	90.7	91.1	88.99	87.76	90.20	88.99	0.01	39.2	39.2	39.1	39.2	63.40	63.38	63.24	63.20	08:34
88.0	88.6	90.3	89.4	89.7	84.4	88.8	90.7	91.2	88.96	87.83	90.23	89.01	0.02	39.2	39.2	39.1	39.2	63.56	63.51	63.34	63.26	08:35
88.2	88.7	90.2	89.4	89.8	84.4	88.9	90.8	91.1	89.02	87.87	90.28	89.06	0.03	39.2	39.3	39.2	39.2	63.54	63.50	63.31	63.28	08:36
88.2	88.6	90.2	89.5	89.9	84.4	88.8	90.6	91.2	89.00	87.95	90.16	89.04	0.03	39.2	39.2	39.2	39.2	63.42	63.35	63.24	63.08	08:37
88.1	88.7	90.2	89.3	89.6	84.4	89.1	90.9	91.1	89.01	87.78	90.34	89.04	0.04	39.3	39.3	39.2	39.2	63.26	63.28	63.36	63.17	08:38
88.2	88.7	90.2	89.3	89.5	84.4	89.1	90.9	91.1	89.04	87.79	90.34	89.06	0.05	39.2	39.3	39.2	39.2	63.37	63.35	63.15	63.16	08:39
88.2	88.6	90.2	89.6	89.9	84.5	88.8	90.6	91.1	89.02	88.00	90.18	89.07	0.05	39.2	39.3	39.2	39.2	63.12	63.14	63.19	62.88	08:40
88.2	88.5	90.2	89.6	89.9	84.5	88.8	90.6	91.2	89.01	88.00	90.18	89.06	0.06	39.2	39.3	39.2	39.2	63.23	63.22	62.98	62.89	08:41
88.1	88.6	90.2	89.5	89.6	84.4	88.9	90.6	91.2	88.94	87.90	90.23	89.02	0.07	39.2	39.3	39.2	39.2	63.03	63.05	62.97	62.82	08:42
88.2	88.6	90.1	89.5	89.9	84.4	88.9	90.5	91.0	88.96	87.93	90.17	89.02	0.07	39.3	39.4	39.2	39.3	63.15	63.28	62.97	62.95	08:43
88.2	88.7	90.2	89.6	89.9	84.4	88.8	90.6	91.1	89.04	87.97	90.17	89.06	0.08	39.3	39.3	39.3	39.3	63.18	63.37	63.29	63.07	08:44
88.1	88.7	90.3	89.3	89.7	84.4	89.0	90.9	91.2	89.01	87.80	90.36	89.06	0.09	39.3	39.3	39.2	39.3	63.12	63.28	63.13	63.09	08:45
88.2	88.8	90.2	89.3	89.7	84.5	89.0	90.9	91.1	89.04	87.84	90.33	89.07	0.10	39.3	39.4	39.3	39.3	62.84	63.05	63.09	62.90	08:46
88.2	88.8	90.3	89.4	89.8	84.5	88.8	90.7	91.1	89.07	87.92	90.22	89.07	0.10	39.3	39.3	39.3	39.3	63.12	63.30	63.12	63.03	08:47
88.0	88.7	90.3	89.4	89.7	84.4	88.9	90.8	91.2	89.00	87.85	90.29	89.04	0.11	39.3	39.4	39.3	39.3	63.00	63.16	63.25	63.03	08:48
88.2	88.7	90.2	89.3	89.7	84.4	89.0	90.8	91.1	89.02	87.84	90.28	89.05	0.11	39.4	39.4	39.3	39.4	63.12	63.22	63.00	63.07	08:49
88.1	88.7	90.3	89.3	89.6	84.4	89.0	90.8	91.2	89.02	87.77	90.33	89.04	0.11	39.4	39.4	39.3	39.3	63.04	63.14	62.96	63.00	08:50
88.0	88.5	90.1	89.4	89.8	84.4	88.8	90.6	91.2	88.90	87.88	90.19	88.99	0.10	39.3	39.4	39.3	39.3	62.94	62.96	62.72	62.72	08:51
88.0	88.6	90.2	89.3	89.6	84.4	88.9	90.8	91.2	88.94	87.79	90.31	89.01	0.10	39.3	39.3	39.3	39.3	63.08	63.20	62.95	63.02	08:52
88.0	88.6	90.2	89.3	89.6	84.4	88.9	90.8	91.2	88.93	87.78	90.29	89.00	0.09	39.3	39.4	39.3	39.4	63.21	63.34	63.12	63.19	08:53
88.0	88.6	90.1	89.3	89.7	84.4	88.9	90.7	91.2	88.92	87.82	90.26	89.00	0.09	39.4	39.4	39.4	39.4	63.27	63.40	63.16	63.24	08:54
88.0	88.5	90.1	89.4	89.8	84.4	88.8	90.6	91.2	88.91	87.90	90.21	89.00	0.09	39.4	39.4	39.4	39.4	63.39	63.73	63.43	63.49	08:55
88.2	88.7	90.1	89.4	89.8	84.5	89.0	90.8	91.1	89.03	87.91	90.29	89.07	0.09	39.4	39.4	39.3	39.4	63.13	63.30	63.03	63.07	08:56
88.1	88.7	90.2	89.3	89.7	84.4	89.0	90.9	91.2	89.03	87.82	90.27	89.07	0.10	39.4	39.4	39.3	39.4	63.12	63.29	63.02	63.09	08:57
88.1	88.6	90.2	89.5	89.9	84.5	88.8	90.6	91.2	88.95	87.93	90.20	89.04	0.11	39.4	39.4	39.4	39.4	63.07	63.15	62.98	62.98	08:58
88.2	88.7	90.2	89.4	89.8	84.5	89.0	90.8	91.1	89.02	87.89	90.25	89.07	0.11	39.4	39.4	39.3	39.4	63.02	63.08	62.93	62.96	08:59
88.1	88.7	90.3	89.4	89.7	84.4	88.9	90.8	91.2	89.00	87.84	90.28	89.04	0.11	39.4	39.4	39.3	39.4	63.00	63.06	62.86	62.90	09:00
88.1	88.6	90.2	89.4	89.8	84.5	88.8	90.6	91.1	88.93	87.91	90.17	89.00	0.11	39.4	39.4	39.3	39.4	62.90	62.92	62.78	62.77	09:01
88.0	88.6	90.2	89.3	89.6	84.4	88.9	90.3	91.2	88.94	87.77	90.28	89.00	0.10	39.4	39.4	39.3	39.4	62.98	62.97	62.84	62.94	09:02
88.2	88.7	90.1	89.3	89.7	84.5	88.9	90.7	91.0	88.98	87.83	90.24	89.02	0.10	39.4	39.4	39.4	39.4	62.82	62.83	62.91	62.83	09:03
88.1	88.6	90.2	89.5	89.9	84.4	88.7	90.5	91.1	88.96	87.95	90.09	89.00	0.09	39.3	39.4	39.4	39.4	62.96	62.98	62.82	62.77	09:04
88.1	88.5	90.1	89.5	89.8	84.4	88.7	90.5	91.1	88.92	87.92	90.09	88.98	0.09	39.4	39.5	39.4	39.4	62.77	62.83	62.86	62.72	09:05
[illegible]	88.5	90.1	89.4	89.8	84.4	88.7	90.5	91.1	88.88	87.87	90.10	88.85	0.08	39.4	39.5	39.4	39.4	62.93	62.96	62.74	62.82	09:06
[illegible]	88.6	90.1	89.3	89.7	84.4	88.8	90.6	91.1	88.89	87.81	90.16	88.98	0.07	39.5	39.5	39.4	39.5	62.75	63.04	62.98	62.94	09:07
88.2	88.7	90.1	89.4	89.8	84.4	88.9	90.7	91.0	88.97	87.85	90.21	89.01	0.07	39.5	39.5	39.4	39.5	62.99	63.21	62.86	63.03	09:08
88.2	88.7	90.2	89.5	89.9	84.4	88.8	90.6	91.0	89.01	87.92	90.15	89.03	0.07	39.4	39.4	39.4	39.4	62.79	63.08	63.00	62.88	09:09
88.0	88.6	90.3	89.3	89.7	84.4	88.8	90.6	91.1	88.95	87.81	90.18	88.98	0.06	39.5	39.5	39.4	39.4	62.86	63.12	62.83	62.94	09:10
88.0	88.7	90.1	89.2	89.6	84.4	88.9	90.8	91.0	88.93	87.72	90.25	88.97	0.05	39.4	39.5	39.4	39.5	62.59	62.89	62.78	62.85	09:11
88.1	88.5	90.1	89.5	89.9	84.4	88.7	90.5	91.0	88.90	87.92	90.07	88.96	0.05	39.4	39.5	39.4	39.4	63.00	63.18	62.95	62.97	09:12
88.0	88.5	90.1	89.3	89.7	84.4	88.8	90.6	91.1	88.87	87.81	90.15	88.95	0.04	39.4	39.5	39.4	39.4	63.04	63.19	63.03	63.09	09:13
88.0	88.5	90.1	89.4	89.8	84.4	88.7	90.5	91.1	88.86	87.91	90.10	88.96	0.03	39.5	39.5	39.5	39.5	63.15	63.30	63.12	63.16	09:14
88.1	88.7	90.2	89.3	89.6	84.4	89.0	90.8	91.1	88.98	87.77	90.31	89.02	0.03	39.4	39.5	39.5	39.5	63.23	63.45	63.25	63.37	09:15
88.1	88.6	90.2	89.5	89.9	84.4	88.8	90.6	91.1	88.96	87.96	90.13	89.02	0.03	39.5	39.5	39.4	39.5	63.18	63.39	63.22	63.18	09:16
88.1	88.7	90.3	89.3	89.7	84.4	88.9	90.8	91.2	89.00	87.82	90.30	89.04	0.04	39.5	39.5	39.4	39.5	63.09	63.22	63.12	63.17	09:17
88.2	88.7	90.2	89.4	89.6	84.5	88.9	90.7	91.1	89.02	87.92	90.24	89.06	0.04	39.5	39.5	39.5	39.5	63.19	63.29	63.10	63.16	09:18
88.1	88.6	90.3	89.6	89.9	84.5	88.8	90.6	91.2	89.01	87.99	90.17	89.06	0.04	39.5	39.5	39.5	39.5	63.17	63.25	63.14	63.09	09:19
88.1	88.7	90.3	89.4	89.7	84.5	89.0	90.8	91.2	89.01	87.85	90.35	89.07	0.04	39.4	39.5	39.5	39.5	63.27	63.37	63.07	63.24	09:20
88.2	88.8	90.2	89.4	89.7	84.5	89.1	90.9	91.1	89.04	87.87	90.36	89.09	0.04	39.5	39.5	39.5	39.5	63.22	63.29	63.08	63.21	09:21
88.3	88.8	90.3	89.5	89.9	84.5	89.9	90.7	91.1	89.09	87.98	90.24	89.10	0.04	39.5	39.6	39.5	39.5	63.21	63.22	62.93	63.06	09:22
88.3	88.8	90.3	89.5	89.9	84.5	89.1	90.9	91.1	89.15	87.96	90.36	89.16	0.04	39.5	39.5	39.5	39.5	63.16	63.38	63.23	63.20	09:23
88.3	88.9	90.4	89.5	89.8	84.5	89.1	90.9	91.2	89.17	87.95	90.38	89.17	0.05	39.5	39.5	39.5	39.5	63.15	63.29	63.23	63.18	09:24
88.3	88.7	90.4	89.6	90.0	84.5	88.9	90.6	91.2	89.12	88.06	90.22	89.13	0.05	39.5	39.5	39.5	39.5	63.22	63.35	63.23	63.15	09:25
88.2	88.8	90.4	89.4	89.8	84.5	89.1	90.9	91.3	89.11	87.89	90.42	89.14	0.06	39.5	39.5	39.5	39.5	63.19	63.26	63.34	63.28	09:26
88.3	88.8	90.3	89.5	90.0	84.6	89.0	90.7	91.2	89.12	88.05	90.29	89.15	0.07	39.5	39.5	39.5	39.5	62.07	63.22	63.10	63.06	09:27
88.2	88.7	90.4	89.6	90.0	84.6	88.9	90.7	91.3	89.11	88.05	90.27	89.14	0.07	39.5	39.6	39.5	39.6	63.02	63.19	63.24	63.08	09:28
88.2	88.8	90.3	89.5	89.8	84.6	89.0	90.9	91.3	89.09	87.94	90.39	89.14	0.08	39.5	39.6	39.6	39.6	63.22	63.32	63.20	63.25	09:29
88.2	88.8	90.3	89.4	89.8	84.6	89.2	91.0	91.2	89.11	87.91	90.46	89.16	0.09	39.5	39.5	39.5	39.5	63.03	63.19	63.25	63.16	09:30
88.3	88.8	90.3	89.7	90.1	84.5	88.9	90.8	91.2	89.15	88.11	90.31	89.19	0.09	39.5	39.6	39.5	39.5	63.12	63.28	63.16	63.08	09:31
88.4	88.8	90.4	89.7	90.1	84.6	88.9	90.7	91.3	89.19	88.15	90.31	89.22	0.10	39.6	39.6	39.5	39.5	63.26	63.22	63.19	63.08	09:32

COMMENTS _____

Tested By Frank A. Deeney Date 6-19-93 Reviewed By C.L. Rutledge Date 6-19-93

AMPACITY TEST. JOB NUMBER 93-0501. SAMPLE NUMBER 93-0501-06 DATA FILE 3p3c6g06.002 06-19-1993

POSITION 1			POSITION 2			POSITION 3			POSITION AVERAGE			AVG		AMBIENT TEMPERATURE				AMPERES			
Tb	Tw	Tr	Tb	Tw	Tr	Tb	Tw	Tr	T1av	T2av	T3av	Twave	SLOPE	Tam1	Tam2	Tam3	Taav	Ib	Iw	Ir	I'	TIME
88.8	88.8	90.5	89.5	89.8	84.6	89.1	91.0	91.4	89.20	87.96	90.49	89.22	0.11	39.5	39.6	39.5	39.5	62.04	63.19	62.04	63.06	09:33
[illegible]	88.9	90.4	89.6	89.9	84.7	89.1	90.9	91.3	89.21	88.06	90.44	89.24	0.12	39.6	39.6	39.5	39.6	62.99	63.15	63.04	63.03	09:34
[illegible]	88.3	90.5	89.7	90.1	84.6	88.9	90.7	91.3	89.18	88.14	90.33	89.22	0.14	39.6	39.5	39.5	39.5	62.98	63.18	63.08	62.96	09:35
88.2	88.8	90.4	89.5	89.9	84.6	89.0	90.8	91.3	89.13	88.00	90.40	89.18	0.15	39.6	39.6	39.5	39.6	62.86	62.94	62.83	62.85	09:36
88.1	88.7	90.3	89.5	89.8	84.5	89.0	90.9	91.4	89.05	87.98	90.41	89.15	0.15	39.6	39.5	39.5	39.6	62.74	62.82	62.75	62.79	09:37
88.2	88.8	90.3	89.4	89.7	84.5	89.1	90.9	91.2	89.09	87.91	90.43	89.14	0.16	39.6	39.6	39.6	39.6	62.86	62.95	62.73	62.92	09:38
88.2	88.8	90.3	89.4	89.7	84.6	89.1	90.9	91.3	89.09	87.91	90.45	89.15	0.17	39.6	39.7	39.5	39.6	62.72	62.92	62.95	62.94	09:39
88.3	88.6	90.3	89.6	90.0	84.6	88.9	90.7	91.2	89.10	88.06	90.27	89.14	0.17	39.6	39.6	39.6	39.6	62.77	63.10	62.93	62.92	09:40
88.1	88.7	90.3	89.6	89.9	84.6	88.8	90.7	91.3	89.05	88.01	90.26	89.11	0.18	39.6	39.6	39.5	39.6	62.48	62.83	62.90	62.72	09:41
88.2	88.6	90.3	89.3	89.7	84.6	89.1	90.9	91.2	89.09	87.88	90.41	89.13	0.18	39.6	39.7	39.6	39.6	62.73	62.94	62.84	62.94	09:42
88.1	88.7	90.3	89.4	89.8	84.5	88.9	90.8	91.3	89.04	87.91	90.33	89.09	0.18	39.5	39.7	39.5	39.6	62.54	62.83	62.93	62.87	09:43
88.2	88.7	90.2	89.5	89.9	84.6	88.9	90.7	91.1	89.05	87.99	90.24	89.09	0.18	39.6	39.7	39.6	39.6	62.89	63.00	62.85	62.94	09:44
88.3	88.3	90.3	89.6	90.0	84.5	88.9	90.7	91.1	89.11	88.03	90.26	89.13	0.18	39.6	39.7	39.6	39.6	62.62	62.96	62.98	62.85	09:45
88.2	88.9	90.4	89.4	89.7	84.5	89.1	90.9	91.2	89.15	87.88	90.39	89.14	0.19	39.7	39.7	39.6	39.6	62.70	62.92	62.84	62.93	09:46
88.1	88.8	90.4	89.4	89.7	84.5	89.1	90.9	91.3	89.09	87.87	90.40	89.12	0.19	39.6	39.6	39.5	39.6	62.64	62.90	62.78	62.88	09:47
88.1	88.7	90.3	89.3	89.7	84.6	89.0	90.9	91.2	89.03	87.85	90.38	89.08	0.19	39.6	39.7	39.6	39.6	62.46	62.62	62.43	62.63	09:48
88.1	88.7	90.3	89.3	89.7	84.6	89.0	90.9	91.2	89.03	87.83	90.35	89.07	0.19	39.6	39.7	39.6	39.6	62.54	62.67	62.52	62.71	09:49
88.2	88.7	90.2	89.4	89.9	84.5	88.8	90.6	91.0	88.99	87.94	90.16	89.03	0.18	39.6	39.6	39.6	39.6	62.46	62.63	62.44	62.57	09:50
88.0	88.7	90.3	89.3	89.6	84.5	89.0	90.8	91.1	89.00	87.77	90.31	89.03	0.17	39.6	39.6	39.6	39.6	62.46	62.67	62.45	62.66	09:51
88.1	88.7	90.2	89.3	89.7	84.5	88.9	90.7	91.0	88.99	87.83	90.20	89.01	0.15	39.7	39.6	39.6	39.6	62.24	62.46	62.30	62.47	09:52
88.0	88.7	90.2	89.2	89.5	84.4	88.9	90.8	91.1	88.97	87.74	90.25	88.99	0.14	39.6	39.7	39.5	39.5	62.72	62.70	62.58	62.85	09:53
88.1	88.5	90.1	89.4	89.8	84.4	88.8	90.6	91.0	88.92	87.89	90.10	88.97	0.12	39.6	39.7	39.6	39.6	62.80	62.78	62.64	62.79	09:54
88.1	88.7	90.2	89.2	89.5	84.4	89.0	90.8	91.0	88.99	87.73	90.26	89.00	0.10	39.6	39.6	39.6	39.6	62.83	62.85	62.75	62.97	09:55
88.1	88.6	90.2	89.5	89.8	84.4	88.8	90.5	91.0	88.96	87.90	90.08	88.98	0.09	39.6	39.6	39.6	39.6	62.74	62.83	62.89	62.86	09:56
88.1	88.7	90.2	89.3	89.6	84.4	89.0	90.8	91.1	89.02	87.73	90.29	89.03	0.09	39.6	39.7	39.6	39.6	62.94	62.94	62.83	63.04	09:57
88.2	88.7	90.2	89.4	89.7	84.5	88.9	90.7	91.0	89.02	87.86	90.19	89.02	0.08	39.6	39.7	39.6	39.6	62.74	62.64	62.87	62.82	09:58
88.2	88.6	90.2	89.5	89.8	84.5	88.8	90.6	91.0	88.92	87.93	90.13	89.02	0.08	39.6	39.6	39.6	39.6	62.87	62.85	62.87	62.89	09:59
88.2	88.6	90.3	89.5	89.9	84.4	88.7	90.5	91.1	88.91	87.94	90.06	88.91	0.07	39.6	39.6	39.6	39.6	62.86	62.87	63.10	62.94	10:00
88.2	88.6	90.2	89.5	89.9	84.5	88.8	90.5	91.0	88.90	87.95	90.11	88.92	0.05	39.6	39.7	39.6	39.6	63.06	63.00	63.05	63.04	10:01
88.2	88.7	90.2	89.5	89.8	84.5	88.9	90.6	91.0	88.94	87.94	90.19	88.96	0.04	39.6	39.6	39.6	39.6	62.98	62.96	62.92	62.96	10:02
88.2	88.8	90.3	89.4	89.8	84.5	89.0	90.8	91.1	89.09	87.90	90.29	89.09	0.04	39.6	39.6	39.6	39.6	63.03	62.95	62.93	63.03	10:03
88.2	88.8	90.4	89.4	89.7	84.5	89.1	90.8	91.2	89.09	87.83	90.35	89.09	0.04	39.6	39.6	39.6	39.6	63.06	62.95	62.97	63.08	10:04
88.2	88.7	90.3	89.3	89.6	84.5	89.1	90.9	91.1	89.05	87.92	90.36	89.08	0.03	39.5	39.6	39.6	39.6	63.03	62.98	62.89	63.07	10:05
88.3	88.8	90.3	89.5	89.8	84.5	89.0	90.8	91.1	89.09	87.94	90.27	89.10	0.02	39.6	39.7	39.6	39.6	63.07	62.94	62.96	63.04	10:06
[illegible]	88.7	90.3	89.5	89.9	84.5	88.8	90.6	91.2	88.97	88.02	90.18	89.09	0.00	39.6	39.6	39.5	39.6	63.16	63.06	62.85	62.96	10:07
[illegible]	88.6	90.2	89.6	89.9	84.5	88.8	90.6	91.2	88.90	88.03	90.18	89.07	-0.01	39.6	39.6	39.5	39.6	63.00	62.94	62.98	62.91	10:08
88.3	88.7	90.2	89.6	89.9	84.5	88.9	90.7	91.1	88.96	88.01	90.24	89.10	-0.01	39.6	39.7	39.5	39.6	62.96	62.92	62.88	62.91	10:09
88.2	88.8	90.3	89.4	89.7	84.5	89.1	90.9	91.2	89.12	87.88	90.40	89.13	-0.01	39.6	39.6	39.6	39.6	62.93	62.98	62.91	63.01	10:10
88.3	88.8	90.3	89.4	89.7	84.5	89.1	90.9	91.1	89.14	87.88	90.37	89.13	-0.02	39.6	39.6	39.5	39.6	62.73	62.89	63.03	62.95	10:11
88.1	88.8	90.4	89.4	89.8	84.5	89.0	90.8	91.3	89.09	87.89	90.35	89.11	-0.03	39.6	39.5	39.5	39.5	62.79	62.90	62.81	62.86	10:12
88.1	88.7	90.2	89.6	89.9	84.6	88.8	90.6	91.2	88.99	88.02	90.23	89.08	-0.05	39.5	39.6	39.6	39.6	62.52	62.66	62.60	62.62	10:13
88.2	88.8	90.2	89.3	89.7	84.6	89.1	90.8	91.1	89.07	87.88	90.35	89.10	-0.06	39.6	39.6	39.6	39.6	62.94	62.81	62.85	62.97	10:14
88.1	88.7	90.3	89.4	89.7	84.5	89.0	90.8	91.2	89.05	87.88	90.32	89.08	-0.07	39.5	39.6	39.5	39.6	63.07	62.96	62.99	63.04	10:15
88.3	88.7	90.2	89.5	89.9	84.6	89.0	90.8	91.1	89.06	88.00	90.28	89.12	-0.08	39.6	39.6	39.5	39.6	63.07	62.98	63.03	63.01	10:16
88.3	88.8	90.3	89.6	89.9	84.5	89.0	90.8	91.1	89.14	88.00	90.32	89.15	-0.08	39.6	39.6	39.6	39.6	63.02	62.90	62.89	62.93	10:17
88.3	88.8	90.4	89.4	89.7	84.6	89.1	90.9	91.2	89.18	87.91	90.41	89.16	-0.08	39.5	39.6	39.5	39.6	62.97	62.87	62.78	62.90	10:18
88.3	88.8	90.4	89.6	89.9	84.5	89.1	90.8	91.1	89.18	88.00	90.34	89.17	-0.08	39.5	39.6	39.5	39.6	62.87	62.77	62.72	62.75	10:19
88.2	88.7	90.4	89.6	90.0	84.6	88.9	90.7	91.3	89.11	88.05	90.27	89.14	-0.08	39.5	39.6	39.5	39.6	63.07	62.94	62.86	62.88	10:20
88.3	88.8	90.3	89.4	89.8	84.6	89.1	90.9	91.2	89.14	87.93	90.40	89.15	-0.07	39.5	39.5	39.5	39.5	62.99	62.91	62.86	62.93	10:21
88.3	88.7	90.3	89.7	90.0	84.6	88.9	90.6	91.2	89.10	88.08	90.23	89.14	-0.07	39.6	39.6	39.6	39.6	62.80	62.71	62.89	62.72	10:22
88.3	88.8	90.3	89.6	89.9	84.6	89.1	90.8	91.2	89.16	88.01	90.37	89.18	-0.06	39.5	39.6	39.5	39.5	62.90	62.80	62.78	62.79	10:23
88.2	88.7	90.4	89.6	90.0	84.6	88.9	90.6	91.3	89.11	88.06	90.26	89.14	-0.05	39.5	39.6	39.5	39.5	62.81	62.76	62.94	62.75	10:24
88.3	88.8	90.3	89.5	89.8	84.6	89.1	90.9	91.2	89.15	87.97	90.37	89.17	-0.04	39.5	39.6	39.5	39.6	62.97	62.90	62.90	62.91	10:25
88.2	88.8	90.4	89.5	89.8	84.6	89.1	90.9	91.3	89.12	87.95	90.41	89.16	-0.03	39.5	39.5	39.5	39.5	62.68	62.78	62.97	62.78	10:26
88.2	88.7	90.3	89.6	90.0	84.6	88.8	90.6	91.3	89.07	88.07	90.24	89.13	-0.03	39.5	39.5	39.5	39.5	62.73	62.81	62.79	62.68	10:27
88.2	88.7	90.3	89.6	90.0	84.6	88.9	90.7	91.3	89.08	88.06	90.27	89.12	-0.02	39.5	39.5	39.5	39.5	62.66	62.74	62.94	62.70	10:28
88.3	88.8	90.3	89.6	89.9	84.6	89.0	90.7	91.2	89.10	88.05	90.30	89.15	-0.01	39.5	39.6	39.5	39.5	62.75	62.77	62.81	62.71	10:29
88.2	88.7	90.4	89.5	89.8	84.6	88.9	90.7	91.3	89.09	87.97	90.32	89.13	-0.01	39.5	39.5	39.5	39.5	62.51	62.55	62.57	62.51	10:30
88.2	88.8	90.3	89.4	89.7	84.8	89.1	90.9	91.2	89.09	87.91	90.29	89.13	0.00	39.5	39.5	39.5	39.5	62.60	62.64	62.63	62.55	10:31
88.2	88.7	90.3	89.6	90.0	84.6	88.8	90.6	91.2	89.05	88.07	90.21	89.11	0.02	39.5	39.5	39.5	39.5	62.84	62.89	62.76	62.71	10:32

COMMENTS _____

Tested By Frank A. Deimey Date 6-19-93 Reviewed By C.L. Rutledge Date 6-19-93

AMPACITY TEST. JOB NUMBER 93-0501. SAMPLE NUMBER 93-0501-06 DATA FILE 3p3c6g06.002 06-19-1993

POSITION 1			POSITION 2			POSITION 3			POSITION AVERAGE			AVG		AMBIENT TEMPERATURE				AMPERES				
Tb	Tw	Tr	Tb	Tw	Tr	Tb	Tw	Tr	T1av	T2av	T3av	Twave	SLOPE	Tam1	Tam2	Tam3	Taav	Ib	Iw	Ir	I'	TIME
88.3	88.8	90.3	89.5	89.8	84.6	89.0	90.8	91.1	89.11	87.95	90.31	89.12	0.03	39.5	39.5	39.5	39.5	62.80	62.86	62.71	62.76	10:33
8[illegible]	88.7	90.4	89.6	89.9	84.5	88.9	90.6	91.2	89.07	88.00	90.23	89.10	0.04	39.4	39.5	39.5	39.5	62.75	62.80	62.67	62.64	10:34
8[illegible]	88.6	90.2	89.5	89.8	84.6	88.8	90.6	91.2	88.95	87.95	90.23	89.05	0.05	39.5	39.5	39.5	39.5	62.56	62.40	62.62	62.46	10:35
88.1	88.7	90.2	89.3	89.6	84.5	89.0	90.8	91.2	89.00	87.84	90.34	89.06	0.05	39.4	39.5	39.5	39.5	62.69	62.56	62.59	62.63	10:36
88.1	88.6	90.2	89.4	89.7	84.5	88.9	90.7	91.2	88.96	87.88	90.25	89.03	0.05	39.5	39.5	39.5	39.5	62.67	62.60	62.80	62.69	10:37
88.2	88.6	90.1	89.6	89.9	84.6	88.9	90.6	91.1	88.97	88.01	90.15	89.04	0.05	39.5	39.5	39.4	39.5	62.80	62.78	62.88	62.65	10:38
88.2	88.7	90.3	89.4	89.7	84.5	89.1	90.8	91.1	89.06	87.86	90.36	89.09	0.06	39.4	39.5	39.4	39.5	62.72	62.67	62.96	62.78	10:39
88.2	88.7	90.2	89.6	89.9	84.6	88.8	90.6	91.1	89.04	88.05	90.18	89.09	0.06	39.4	39.5	39.5	39.5	62.99	62.90	62.94	62.80	10:40
88.3	88.7	90.3	89.6	89.9	84.6	88.9	90.7	91.1	89.11	88.04	90.23	89.13	0.07	39.4	39.5	39.5	39.4	63.11	62.99	63.05	62.90	10:41
88.3	88.8	90.3	89.6	89.9	84.6	89.0	90.7	91.2	89.15	88.04	90.30	89.16	0.08	39.4	39.4	39.4	39.4	63.12	62.95	62.97	62.88	10:42
88.2	88.8	90.4	89.4	89.7	84.5	89.1	90.8	91.2	89.12	87.90	90.39	89.14	0.08	39.5	39.5	39.4	39.5	63.05	62.89	62.84	62.88	10:43
88.2	88.6	90.3	89.7	90.0	84.6	88.9	90.6	91.2	89.04	88.09	90.24	89.12	0.09	39.4	39.5	39.5	39.4	62.96	62.77	62.76	62.67	10:44
88.2	88.7	90.3	89.5	89.8	84.6	89.1	90.8	91.3	89.07	87.93	90.39	89.13	0.09	39.4	39.5	39.4	39.4	62.91	62.75	62.77	62.74	10:45
88.2	88.7	90.3	89.6	90.0	84.6	88.9	90.6	91.2	89.04	88.07	90.22	89.11	0.10	39.4	39.5	39.5	39.5	63.01	62.84	62.90	62.78	10:46
88.3	88.8	90.3	89.6	89.9	84.6	89.1	90.8	91.2	89.14	88.06	90.34	89.18	0.11	39.5	39.5	39.5	39.5	63.03	62.88	62.90	62.81	10:47
88.4	88.8	90.3	89.6	89.9	84.6	89.1	90.8	91.2	89.18	88.06	90.35	89.20	0.12	39.5	39.5	39.4	39.5	62.92	62.79	62.84	62.71	10:48
88.4	88.9	90.4	89.6	89.9	84.6	89.1	90.8	91.2	89.22	88.05	90.38	89.21	0.13	39.4	39.5	39.4	39.4	62.90	62.83	62.80	62.71	10:49
88.4	88.9	90.5	89.6	89.8	84.6	89.2	90.9	91.2	89.24	88.00	90.44	89.23	0.14	39.4	39.5	39.4	39.4	62.90	62.58	62.87	62.68	10:50
88.4	88.9	90.5	89.5	89.8	84.6	89.2	90.9	91.2	89.24	88.00	90.45	89.23	0.14	39.4	39.4	39.4	39.4	62.82	62.87	62.80	62.72	10:51
88.3	88.9	90.4	89.5	89.8	84.6	89.2	91.0	91.2	89.23	88.00	90.45	89.23	0.14	39.4	39.5	39.5	39.4	62.84	62.91	62.98	62.81	10:52
88.2	88.8	90.5	89.6	89.9	84.6	89.1	90.8	91.3	89.17	88.01	90.41	89.20	0.14	39.4	39.4	39.4	39.4	62.98	62.81	62.86	62.75	10:53
88.3	88.7	90.3	89.7	90.0	84.6	88.9	90.7	91.3	89.09	88.11	90.27	89.15	0.13	39.5	39.5	39.5	39.5	62.90	62.76	62.80	62.68	10:54
88.3	88.8	90.3	89.5	89.9	84.6	89.1	90.9	91.2	89.15	88.02	90.38	89.18	0.13	39.4	39.5	39.4	39.4	62.72	62.56	62.65	62.54	10:55
88.2	88.8	90.4	89.5	89.8	84.6	89.0	90.8	91.3	89.13	87.99	90.38	89.17	0.12	39.5	39.5	39.4	39.5	62.81	62.75	62.92	62.74	10:56
88.3	88.8	90.3	89.5	89.8	84.7	89.1	90.9	91.2	89.15	87.97	90.41	89.18	0.11	39.5	39.5	39.5	39.5	62.78	62.82	62.93	62.81	10:57
88.2	88.8	90.4	89.4	89.7	84.6	89.2	90.9	91.3	89.16	87.91	90.46	89.18	0.11	39.5	39.5	39.5	39.5	62.74	62.75	62.89	62.79	10:58
88.2	88.8	90.4	89.4	89.8	84.6	89.1	90.9	91.3	89.14	87.92	90.45	89.17	0.10	39.5	39.5	39.5	39.5	62.88	62.93	63.02	62.94	10:59
88.3	88.8	90.4	89.4	89.7	84.6	89.2	90.9	91.3	89.15	87.93	90.47	89.18	0.10	39.5	39.6	39.5	39.5	62.88	62.87	62.97	62.91	11:00
88.3	88.8	90.3	89.6	89.9	84.7	89.1	90.8	91.2	89.17	88.07	90.36	89.20	0.09	39.5	39.5	39.4	39.5	62.68	62.73	63.02	62.73	11:01
88.3	88.8	90.4	89.6	90.0	84.7	89.1	90.8	91.2	89.21	88.07	90.39	89.22	0.09	39.4	39.5	39.4	39.5	62.92	62.90	62.95	62.80	11:02
88.4	88.9	90.5	89.5	89.9	84.6	89.1	90.9	91.2	89.25	88.01	90.40	89.22	0.10	39.5	39.5	39.4	39.5	62.65	62.59	62.99	62.69	11:03
88.3	88.9	90.4	89.5	89.8	84.6	89.1	90.9	91.2	89.20	87.99	90.43	89.20	0.10	39.5	39.5	39.5	39.5	62.68	62.60	62.63	62.59	11:04
88.2	88.7	90.5	89.6	90.0	84.6	88.9	90.7	91.3	89.15	88.06	90.29	89.13	0.09	39.5	39.5	39.5	39.5	62.65	62.56	62.56	62.48	11:05
88.3	88.8	90.3	89.4	89.8	84.6	89.1	90.9	91.2	89.16	87.94	90.40	89.17	0.09	39.5	39.5	39.5	39.5	62.66	62.56	62.56	62.59	11:06
88.2	88.7	90.3	89.7	90.0	84.6	88.9	90.6	91.2	89.09	88.09	90.24	89.14	0.09	39.5	39.5	39.5	39.5	62.80	62.74	62.74	62.63	11:07
8[illegible]	88.7	90.3	89.5	89.8	84.6	88.9	90.7	91.3	89.05	87.97	90.31	89.11	0.08	39.5	39.5	39.5	39.5	62.81	62.76	62.79	62.72	11:08
88.2	88.8	90.3	89.4	89.9	84.6	89.2	90.9	91.2	89.09	87.93	90.42	89.13	0.07	39.5	39.5	39.5	39.5	62.71	62.58	62.72	62.70	11:09
88.3	88.7	90.3	89.6	90.0	84.6	88.8	90.6	91.2	89.08	88.06	90.21	89.12	0.07	39.5	39.5	39.5	39.5	62.60	62.57	62.56	62.45	11:10
88.3	88.8	90.3	89.4	89.8	84.6	89.1	90.9	91.2	89.13	87.94	90.37	89.15	0.07	39.5	39.5	39.5	39.5	62.72	62.55	62.79	62.67	11:11
88.1	88.7	90.4	89.5	89.7	84.6	89.0	90.8	91.3	89.07	87.92	90.37	89.12	0.06	39.5	39.5	39.5	39.5	62.57	62.46	62.93	62.62	11:12
88.3	88.7	90.3	89.5	89.8	84.6	89.0	90.8	91.2	89.09	87.98	90.32	89.13	0.05	39.6	39.6	39.5	39.5	62.82	62.65	62.82	62.75	11:13
88.2	88.7	90.4	89.4	89.7	84.6	89.1	90.9	91.3	89.10	87.90	90.41	89.14	0.05	39.5	39.5	39.4	39.5	62.66	62.51	62.97	62.69	11:14
88.3	88.6	90.3	89.6	89.9	84.6	88.9	90.6	91.2	89.05	88.05	90.20	89.10	0.04	39.5	39.5	39.5	39.5	62.78	62.57	62.77	62.60	11:15
88.2	88.6	90.3	89.6	89.9	84.6	88.8	90.6	91.2	89.03	88.02	90.22	89.09	0.03	39.5	39.5	39.5	39.5	62.70	62.47	62.67	62.53	11:16
88.3	88.7	90.3	89.5	89.9	84.5	89.0	90.6	91.1	89.08	88.01	90.25	89.11	0.02	39.5	39.6	39.5	39.5	62.89	62.66	62.85	62.76	11:17
88.1	88.6	90.3	89.6	89.8	84.6	88.9	90.7	91.3	89.03	87.97	90.29	89.10	0.02	39.5	39.5	39.4	39.5	62.79	62.58	62.79	62.65	11:18
88.1	88.6	90.3	89.4	89.6	84.6	89.1	90.8	91.3	89.01	87.86	90.38	89.08	0.02	39.5	39.5	39.5	39.5	62.54	62.33	62.52	62.49	11:19
88.2	88.7	90.2	89.3	89.6	84.6	89.1	90.8	91.1	89.04	87.84	90.33	89.07	0.01	39.6	39.6	39.5	39.6	62.75	62.59	62.55	62.72	11:20
88.1	88.6	90.3	89.5	89.8	84.5	88.9	90.6	91.2	89.02	87.94	90.24	89.07	0.00	39.5	39.6	39.5	39.5	62.94	62.77	62.57	62.75	11:21
88.3	88.7	90.2	89.5	89.8	84.6	89.0	90.8	91.1	89.07	87.94	90.31	89.11	-0.00	39.6	39.5	39.5	39.5	63.08	63.04	63.02	63.04	11:22
88.3	88.8	90.3	89.4	89.7	84.6	89.1	90.9	91.2	89.13	87.91	90.40	89.14	0.00	39.6	39.6	39.5	39.5	62.80	62.86	63.09	62.93	11:23
88.3	88.8	90.4	89.5	89.8	84.6	89.1	90.9	91.2	89.16	87.95	90.38	89.16	0.01	39.6	39.6	39.6	39.6	62.96	62.94	62.98	62.98	11:24
88.2	88.7	90.4	89.6	90.0	84.6	88.9	90.7	91.3	89.12	88.07	90.28	89.15	0.01	39.6	39.6	39.5	39.6	62.73	62.82	63.01	62.79	11:25
88.1	88.7	90.3	89.5	89.8	84.6	89.0	90.8	91.3	89.06	87.96	90.35	89.12	0.01	39.6	39.6	39.5	39.6	62.83	62.89	62.86	62.89	11:26
88.2	88.7	90.2	89.7	90.0	84.7	88.9	90.6	91.3	89.04	88.11	90.25	89.13	0.01	39.6	39.6	39.5	39.6	62.87	62.95	62.85	62.82	11:27
88.2	88.8	90.3	89.4	89.8	84.6	89.2	91.0	91.2	89.13	87.93	90.44	89.17	0.01	39.6	39.6	39.5	39.5	62.83	62.98	62.89	62.93	11:28
88.3	88.8	90.3	89.5	89.9	84.6	89.1	90.9	91.2	89.16	88.01	90.40	89.19	0.02	39.6	39.6	39.5	39.6	62.79	62.88	62.84	62.83	11:29
88.2	88.8	90.5	89.6	89.9	84.6	89.0	90.8	91.3	89.14	88.02	90.36	89.17	0.02	39.6	39.6	39.6	39.6	62.79	62.92	62.85	62.84	11:30
88.3	88.8	90.3	89.5	89.9	84.6	89.1	90.8	91.2	89.15	88.02	90.35	89.17	0.02	39.7	39.6	39.6	39.6	62.82	62.93	62.90	62.90	11:31
88.3	88.9	90.4	89.5	89.9	84.6	89.1	90.9	91.2	89.22	88.02	90.41	89.21	0.02	39.6	39.6	39.5	39.6	62.56	62.68	62.65	62.63	11:32

COMMENTS _____

Tested By Frank A. Deiney Date 6-19-93 Reviewed By C.L. Rutledge Date 6-19-93

AMPACITY TEST. JOB NUMBER 93-0501. SAMPLE NUMBER 93-0501-07 DATA FILE 3P3C6807.001 06-21-1993

POSITION 1			POSITION 2			POSITION 3			POSITION AVERAGE			AVG		AMBIENT TEMPERATURE				AMPERES				
Tb	Tw	Tr	Tb	Tw	Tr	Tb	Tw	Tr	T1av	T2av	T3av	Twave	SLOPE	Tam1	Tam2	Tam3	Taav	Ib	Iw	Ir	I'	TIME
[illegible]	91.1	91.9	89.7	90.1	88.6	89.0	89.3	89.4	91.25	89.46	89.26	89.99	-0.00	39.8	40.5	40.5	40.3	63.81	63.87	63.38	64.03	14:52
90.8	91.0	91.9	89.8	90.1	88.5	88.9	89.2	89.6	91.26	89.47	89.25	89.99	-0.00	39.9	40.5	40.5	40.3	63.81	63.93	63.58	64.08	14:53
90.9	91.0	91.9	89.8	90.1	88.5	88.9	89.3	89.6	91.26	89.45	89.26	89.99	-0.00	39.8	40.5	40.5	40.3	64.02	64.09	63.53	64.17	14:54
90.7	91.0	91.9	89.8	90.1	88.5	88.9	89.3	89.6	91.22	89.47	89.27	89.99	-0.00	39.9	40.5	40.5	40.3	63.84	63.93	63.58	64.08	14:55
90.8	91.0	91.8	89.9	90.1	88.6	88.9	89.2	89.5	91.18	89.53	89.22	89.98	-0.01	39.9	40.6	40.5	40.3	63.85	63.91	63.34	63.97	14:56
90.7	90.9	91.7	89.9	90.3	88.6	88.8	89.2	89.6	91.11	89.56	89.18	89.95	-0.01	39.9	40.5	40.5	40.3	63.54	63.63	63.28	63.75	14:57
90.8	91.0	91.7	89.8	90.1	88.5	88.8	89.1	89.6	91.17	89.45	89.17	89.93	-0.02	39.9	40.5	40.5	40.3	63.71	63.77	63.18	63.87	14:58
90.8	90.9	91.8	89.7	90.4	88.6	88.8	89.3	89.5	91.14	89.54	89.20	89.96	-0.02	39.9	40.5	40.5	40.3	63.65	63.81	63.39	63.97	14:59
90.8	90.9	91.8	89.9	90.3	88.7	88.7	89.1	89.5	91.14	89.63	89.11	89.96	-0.02	39.9	40.5	40.5	40.3	63.86	63.98	63.36	63.99	15:00
90.7	90.9	91.8	89.8	90.2	88.6	89.0	89.2	89.4	91.15	89.54	89.20	89.96	-0.03	39.9	40.6	40.5	40.3	64.04	64.07	63.43	64.15	15:01
90.8	90.9	91.8	89.9	90.3	88.7	88.8	89.2	89.4	91.16	89.62	89.15	89.98	-0.03	39.9	40.5	40.5	40.3	64.01	64.02	63.47	64.12	15:02
90.8	91.0	91.8	89.8	90.1	88.4	89.1	89.4	89.5	91.23	89.43	89.33	89.99	-0.03	39.9	40.6	40.6	40.3	63.88	63.96	63.35	64.08	15:03
90.8	90.9	91.8	89.8	90.4	88.7	88.9	89.3	89.5	91.17	89.64	89.22	90.01	-0.02	39.9	40.6	40.5	40.3	64.01	64.10	63.51	64.17	15:04
90.9	91.0	91.8	89.8	90.3	88.7	88.9	89.3	89.5	91.21	89.62	89.22	90.02	-0.02	39.9	40.5	40.5	40.3	63.98	64.00	63.41	64.09	15:05
90.8	91.1	91.9	89.9	90.1	88.6	89.0	89.2	89.6	91.24	89.54	89.27	90.02	-0.02	39.9	40.5	40.5	40.3	63.91	63.97	63.34	63.98	15:06
90.8	90.9	91.7	89.8	90.3	88.6	88.9	89.4	89.6	91.17	89.55	89.29	90.00	-0.02	39.8	40.6	40.5	40.3	63.98	64.02	63.38	64.13	15:07
90.8	90.9	91.8	89.9	90.4	88.7	88.8	89.2	89.6	91.18	89.67	89.19	90.01	-0.02	39.8	40.5	40.5	40.3	63.97	63.98	63.41	64.00	15:08
90.8	91.0	91.8	90.0	90.2	88.7	89.0	89.2	89.6	91.21	89.59	89.28	90.03	-0.01	39.9	40.5	40.5	40.3	64.04	64.10	63.53	64.11	15:09
90.9	91.1	91.8	89.9	90.1	88.5	89.1	89.3	89.7	91.25	89.51	89.35	90.04	-0.01	39.9	40.5	40.5	40.3	63.52	63.76	63.50	63.87	15:10
90.9	91.1	91.8	89.9	90.2	88.6	89.1	89.4	89.7	91.27	89.55	89.38	90.07	-0.00	39.9	40.5	40.6	40.3	64.00	64.06	63.53	64.13	15:11
90.8	90.9	91.9	89.8	90.5	88.7	88.9	89.4	89.6	91.21	89.69	89.30	90.07	0.01	39.9	40.5	40.5	40.3	63.88	63.99	63.60	64.11	15:12
90.8	91.1	91.9	89.8	90.2	88.5	89.1	89.5	89.7	91.24	89.52	89.41	90.06	0.01	39.9	40.6	40.5	40.3	63.86	63.94	63.32	64.01	15:13
90.9	91.1	91.8	89.8	90.3	88.7	89.0	89.5	89.6	91.27	89.58	89.35	90.07	0.02	39.9	40.6	40.5	40.3	63.72	63.87	63.46	64.00	15:14
90.9	91.1	91.9	89.9	90.2	88.6	89.1	89.4	89.7	91.29	89.55	89.38	90.07	0.03	39.9	40.6	40.6	40.4	63.81	63.93	63.23	63.94	15:15
90.8	91.1	91.9	89.9	90.2	88.5	89.1	89.4	89.7	91.26	89.53	89.40	90.06	0.03	39.9	40.5	40.5	40.3	63.66	63.82	63.36	63.89	15:16
90.9	91.1	91.8	89.9	90.2	88.5	89.1	89.3	89.7	91.28	89.53	89.37	90.06	0.04	39.9	40.6	40.6	40.3	63.92	64.03	63.33	64.05	15:17
90.8	91.1	91.9	89.9	90.3	88.6	89.1	89.5	89.7	91.25	89.57	89.41	90.08	0.04	39.9	40.6	40.6	40.4	64.03	64.17	63.48	64.18	15:18
90.9	91.1	91.8	89.8	90.3	88.7	89.1	89.5	89.6	91.29	89.61	89.39	90.10	0.05	39.9	40.6	40.6	40.4	63.96	64.22	63.51	64.22	15:19
91.0	91.1	91.9	89.9	90.3	88.6	89.1	89.5	89.7	91.33	89.61	89.44	90.13	0.06	39.9	40.6	40.6	40.4	63.58	63.78	63.64	63.94	15:20
90.9	91.1	92.0	89.8	90.3	88.8	89.0	89.4	89.6	91.32	89.66	89.36	90.11	0.07	39.9	40.6	40.6	40.4	63.65	63.86	63.71	64.07	15:21
90.9	91.0	92.0	89.8	90.4	88.7	88.9	89.5	89.7	91.31	89.67	89.39	90.12	0.08	39.9	40.5	40.6	40.3	63.62	63.82	63.65	64.00	15:22
90.8	91.0	92.0	89.9	90.4	88.8	88.9	89.4	89.6	91.26	89.71	89.31	90.09	0.09	39.9	40.5	40.5	40.3	63.71	63.86	63.71	64.01	15:23
[illegible]	91.1	91.9	89.8	90.3	88.7	89.1	89.5	89.7	91.29	89.60	89.42	90.10	0.10	39.9	40.6	40.6	40.4	63.56	63.81	63.61	64.00	15:24
[illegible]	91.0	91.9	89.8	90.5	88.7	89.0	89.5	89.7	91.27	89.66	89.40	90.11	0.10	39.9	40.6	40.5	40.3	63.41	63.68	63.70	63.92	15:25
[illegible]	91.1	92.0	89.8	90.2	88.6	89.1	89.5	89.8	91.32	89.53	89.46	90.10	0.11	39.9	40.6	40.6	40.4	63.51	63.44	63.55	63.84	15:26
90.7	91.0	92.0	89.9	90.3	88.8	88.9	89.3	89.7	91.23	89.66	89.28	90.06	0.11	39.9	40.6	40.5	40.3	63.24	63.22	63.54	63.59	15:27
90.7	90.9	91.9	89.9	90.2	88.8	89.0	89.3	89.7	91.17	89.65	89.30	90.04	0.11	39.9	40.5	40.5	40.3	63.47	63.47	63.57	63.76	15:28
90.7	90.8	91.8	89.9	90.3	88.7	88.9	89.2	89.7	91.11	89.64	89.27	90.01	0.11	39.9	40.5	40.5	40.3	63.21	63.25	63.54	63.57	15:29
90.8	90.9	91.8	89.8	90.3	88.8	88.8	89.3	89.6	91.15	89.63	89.25	90.01	0.10	39.9	40.5	40.6	40.3	63.53	63.50	63.58	63.84	15:30
90.7	90.9	92.0	89.9	90.2	88.8	88.9	89.3	89.6	91.20	89.63	89.25	90.03	0.10	39.8	40.5	40.5	40.3	63.66	63.76	63.96	64.06	15:31
90.8	90.9	91.9	89.9	90.4	88.9	88.9	89.3	89.7	91.17	89.73	89.27	90.06	0.10	39.9	40.5	40.5	40.3	63.74	63.75	63.80	63.99	15:32
90.8	91.0	91.9	89.9	90.1	88.7	89.1	89.2	89.8	91.26	89.57	89.35	90.06	0.11	39.8	40.5	40.5	40.3	63.70	63.72	63.81	63.96	15:33
90.7	90.9	91.9	89.9	90.2	88.7	88.9	89.2	89.8	91.19	89.59	89.31	90.03	0.10	39.9	40.5	40.5	40.3	63.40	63.46	63.40	63.66	15:34
90.8	90.9	91.8	89.9	90.4	88.8	88.9	89.3	89.6	91.16	89.69	89.25	90.03	0.10	39.8	40.5	40.5	40.3	63.48	63.58	63.41	63.74	15:35
90.7	90.9	91.9	89.8	90.4	88.8	89.0	89.4	89.6	91.17	89.68	89.34	90.06	0.10	39.8	40.5	40.5	40.3	63.53	63.71	63.46	63.83	15:36
90.8	91.0	91.8	89.8	90.2	88.7	89.1	89.5	89.7	91.21	89.52	89.39	90.04	0.10	39.8	40.5	40.5	40.3	63.58	63.73	63.50	63.91	15:37
90.7	90.9	91.9	89.8	90.4	88.8	88.9	89.4	89.6	91.17	89.69	89.30	90.05	0.10	39.8	40.5	40.5	40.3	63.66	63.84	63.59	63.95	15:38
90.7	91.0	91.8	89.8	90.2	88.7	89.1	89.5	89.6	91.17	89.55	89.41	90.04	0.10	39.8	40.5	40.5	40.3	63.45	63.59	63.38	63.77	15:39
90.7	90.9	91.9	90.0	90.4	88.8	88.8	89.2	89.7	91.17	89.71	89.26	90.05	0.10	39.8	40.4	40.5	40.2	63.61	63.71	63.51	63.78	15:40
90.8	90.9	91.8	89.8	90.3	88.6	89.0	89.4	89.8	91.20	89.56	89.41	90.06	0.10	39.8	40.4	40.4	40.2	63.64	63.81	63.58	63.93	15:41
90.8	91.0	91.9	89.9	90.4	88.8	89.0	89.4	89.6	91.24	89.69	89.34	90.09	0.10	39.8	40.4	40.4	40.2	63.47	63.70	63.69	63.84	15:42
90.8	91.0	91.9	89.8	90.3	88.8	89.0	89.4	89.6	91.25	89.61	89.36	90.07	0.10	39.8	40.4	40.5	40.2	63.60	63.83	63.48	63.89	15:43
90.7	91.0	92.0	89.8	90.3	88.7	89.1	89.6	89.7	91.23	89.60	89.46	90.10	0.11	39.9	40.5	40.4	40.3	63.37	63.64	63.52	63.80	15:44
90.9	91.0	91.9	89.8	90.3	88.8	89.0	89.5	89.7	91.26	89.62	89.39	90.09	0.11	39.8	40.5	40.4	40.2	63.72	63.96	63.63	64.02	15:45
90.7	91.0	92.0	90.0	90.3	88.7	88.9	89.3	89.8	91.22	89.65	89.35	90.07	0.11	39.8	40.4	40.4	40.2	63.26	63.43	63.59	63.58	15:46
90.8	91.0	91.8	89.8	90.2	88.7	89.1	89.5	89.7	91.22	89.57	89.40	90.06	0.11	39.8	40.5	40.4	40.3	63.41	63.50	63.50	63.76	15:47
90.8	90.9	91.9	89.9	90.4	88.8	88.9	89.3	89.7	91.18	89.72	89.27	90.06	0.10	39.8	40.4	40.5	40.2	63.38	63.43	63.44	63.61	15:48
90.8	90.9	91.8	89.8	90.3	88.6	89.0	89.4	89.7	91.20	89.55	89.38	90.04	0.10	39.8	40.5	40.4	40.2	63.34	63.38	63.43	63.67	15:49
90.7	90.8	91.9	89.8	90.4	88.7	88.9	89.4	89.8	91.16	89.63	89.38	90.06	0.10	39.8	40.4	40.4	40.2	63.24	63.30	63.37	63.50	15:50
90.8	90.9	91.8	89.7	90.1	88.6	89.1	89.4	89.7	91.17	89.47	89.40	90.01	0.09	39.8	40.4	40.4	40.2	63.38	63.37	63.44	63.70	15:51

COMMENTS _____

Tested By Frank A. Dewey Date 6-21-93 Reviewed By C.L. Ritledge Date 6-22-93

AMPACITY TEST. JOB NUMBER 93-0501. SAMPLE NUMBER 93-0501-07 DATA FILE 3P3C6G07.001 06-21-1993

POSITION 1			POSITION 2			POSITION 3			POSITION AVERAGE			AVG		AMBIENT TEMPERATURE				AMPERES				
Tb	Tw	Tr	Tb	Tw	Tr	Tb	Tw	Tr	T1av	T2av	T3av	Twave	SLOPE	Tam1	Tam2	Tam3	Taav	Ib	Iw	Ir	I'	TIME
[illegible]	90.8	91.8	89.7	90.4	88.7	89.0	89.5	89.7	91.11	89.58	89.39	90.03	0.08	39.7	40.4	40.4	40.2	63.30	63.31	63.44	63.61	15:52
90.8	90.8	91.8	89.8	90.2	88.7	88.8	89.1	89.7	91.06	89.57	89.21	89.95	0.07	39.8	40.4	40.4	40.2	63.29	63.25	63.40	63.54	15:53
90.7	90.8	91.8	89.7	90.2	88.6	88.9	89.4	89.7	91.09	89.52	89.32	89.98	0.06	39.8	40.4	40.4	40.2	63.33	63.30	63.36	63.62	15:54
90.6	90.8	91.8	89.7	90.3	88.6	88.9	89.4	89.7	91.06	89.53	89.34	89.98	0.05	39.7	40.4	40.3	40.2	63.36	63.35	63.44	63.64	15:55
90.6	90.8	91.8	89.8	90.1	88.6	89.0	89.2	89.7	91.06	89.52	89.32	89.97	0.03	39.8	40.4	40.4	40.2	63.37	63.38	63.48	63.62	15:56
90.6	90.8	91.8	89.7	90.1	88.7	89.0	89.4	89.6	91.09	89.49	89.34	89.98	0.02	39.8	40.4	40.4	40.2	63.52	63.60	63.80	63.94	15:57
90.8	90.9	91.8	89.7	90.2	88.7	88.9	89.3	89.6	91.16	89.54	89.27	89.99	0.00	39.7	40.4	40.3	40.2	63.53	63.60	63.57	63.82	15:58
90.6	90.8	91.9	89.9	90.3	88.7	88.9	89.2	89.8	91.12	89.63	89.28	90.01	-0.01	39.8	40.3	40.4	40.2	63.45	63.56	63.75	63.74	15:59
90.8	90.9	91.8	89.8	90.1	88.7	88.8	89.2	89.6	91.18	89.57	89.21	89.99	-0.03	39.8	40.4	40.3	40.2	63.47	63.52	63.52	63.69	16:00
90.7	90.8	91.8	89.9	90.4	88.8	88.9	89.2	89.7	91.11	89.69	89.27	90.03	-0.04	39.8	40.4	40.4	40.2	63.45	63.54	63.78	63.77	16:01
90.7	90.9	91.8	89.8	90.2	88.8	89.1	89.4	89.6	91.13	89.56	89.35	90.01	-0.04	39.8	40.4	40.4	40.2	63.60	63.64	63.68	63.87	16:02
90.8	91.0	91.9	89.9	90.1	88.8	88.9	89.2	89.7	91.23	89.59	89.29	90.04	-0.05	39.8	40.4	40.4	40.2	63.62	63.63	63.66	63.80	16:03
90.8	90.9	91.9	89.9	90.4	88.9	88.9	89.3	89.7	91.20	89.73	89.29	90.07	-0.05	39.8	40.4	40.3	40.2	63.59	63.60	63.63	63.76	16:04
90.8	91.0	91.9	89.9	90.2	88.8	88.9	89.2	89.7	91.25	89.64	89.27	90.05	-0.05	39.7	40.4	40.3	40.1	63.40	63.50	63.49	63.61	16:05
90.8	91.0	91.9	89.9	90.2	88.7	88.9	89.2	89.8	91.24	89.61	89.30	90.05	-0.06	39.7	40.3	40.3	40.1	63.54	63.58	63.60	63.69	16:06
90.7	91.0	91.9	89.8	90.1	88.6	89.1	89.4	89.8	91.21	89.54	89.46	90.07	-0.06	39.8	40.3	40.3	40.1	63.60	63.66	63.67	63.82	16:07
90.7	91.0	91.9	89.8	90.2	88.7	89.2	89.5	89.7	91.20	89.57	89.45	90.07	-0.06	39.8	40.4	40.3	40.2	63.61	63.67	63.63	63.86	16:08
90.7	90.9	91.9	90.0	90.4	88.9	88.9	89.3	89.8	91.17	89.75	89.32	90.08	-0.06	39.8	40.4	40.4	40.2	63.45	63.53	63.49	63.62	16:09
90.8	90.8	91.8	89.9	90.4	88.8	88.9	89.3	89.7	91.15	89.71	89.28	90.05	-0.06	39.8	40.4	40.3	40.1	63.30	63.34	63.54	63.52	16:10
90.8	90.9	91.8	89.9	90.3	88.8	88.9	89.2	89.8	91.17	89.67	89.28	90.04	-0.06	39.7	40.4	40.3	40.1	63.40	63.45	63.44	63.55	16:11
90.7	90.8	91.8	89.9	90.4	88.9	88.9	89.2	89.7	91.11	89.73	89.28	90.04	-0.06	39.8	40.3	40.4	40.2	63.34	63.49	63.66	63.63	16:12
90.8	91.0	91.9	89.9	90.1	88.8	89.0	89.2	89.7	91.22	89.61	89.30	90.04	-0.06	39.8	40.3	40.4	40.2	63.45	63.47	63.41	63.60	16:13
90.8	90.9	91.8	89.9	90.3	88.8	89.0	89.3	89.7	91.17	89.69	89.33	90.06	-0.06	39.8	40.3	40.3	40.1	63.20	63.28	63.43	63.46	16:14
90.7	90.9	92.0	89.8	90.2	88.6	89.0	89.4	89.8	91.19	89.55	89.41	90.05	-0.06	39.7	40.3	40.3	40.1	63.52	63.60	63.52	63.71	16:15
90.8	90.9	91.8	89.9	90.2	88.7	88.9	89.2	89.6	91.16	89.59	89.24	90.00	-0.06	39.8	40.4	40.4	40.2	63.42	63.49	63.40	63.62	16:16
90.7	90.8	91.9	89.9	90.4	88.8	88.9	89.2	89.7	91.14	89.72	89.28	90.05	-0.06	39.8	40.4	40.3	40.2	63.48	63.58	63.55	63.67	16:17
90.7	90.9	91.9	89.8	90.3	88.7	89.2	89.6	89.7	91.16	89.57	89.49	90.07	-0.05	39.7	40.3	40.3	40.1	63.54	63.66	63.64	63.83	16:18
90.7	91.0	91.9	89.8	90.2	88.8	89.1	89.4	89.7	91.20	89.60	89.40	90.07	-0.05	39.8	40.4	40.3	40.2	63.56	63.69	63.70	63.84	16:19
90.8	91.0	91.9	89.8	90.3	88.8	89.1	89.5	89.7	91.26	89.63	89.42	90.10	-0.03	39.8	40.4	40.4	40.2	63.54	63.66	63.64	63.83	16:20
90.8	91.0	92.0	89.9	90.2	88.8	89.0	89.3	89.7	91.28	89.66	89.35	90.10	-0.02	39.8	40.3	40.3	40.1	63.46	63.52	63.54	63.65	16:21
90.8	91.1	92.0	89.9	90.2	88.8	89.0	89.3	89.7	91.29	89.64	89.35	90.09	-0.01	39.8	40.4	40.3	40.1	63.64	63.77	63.71	63.86	16:22
90.8	91.0	92.0	89.8	90.3	88.8	89.1	89.4	89.7	91.27	89.68	89.41	90.12	0.00	39.8	40.3	40.3	40.2	63.58	63.67	63.58	63.79	16:23
90.8	90.9	92.0	89.9	90.4	88.7	89.0	89.4	89.9	91.25	89.67	89.43	90.12	0.02	39.8	40.3	40.3	40.1	63.46	63.46	63.54	63.62	16:24
[illegible]	90.9	91.8	89.9	90.4	88.9	88.9	89.4	89.7	91.19	89.71	89.33	90.08	0.02	39.8	40.3	40.3	40.1	63.06	63.20	63.32	63.34	16:25
[illegible]	90.9	91.9	89.8	90.2	88.6	89.0	89.4	89.8	91.17	89.55	89.43	90.05	0.03	39.8	40.4	40.3	40.1	63.26	63.27	63.34	63.47	16:26
90.6	90.9	91.8	89.8	90.2	88.7	89.1	89.5	89.7	91.12	89.55	89.42	90.03	0.03	39.8	40.3	40.4	40.2	63.04	63.10	63.42	63.43	16:27
90.8	90.9	91.8	89.8	90.3	88.8	89.1	89.4	89.7	91.18	89.62	89.38	90.06	0.03	39.7	40.3	40.3	40.1	63.44	63.47	63.48	63.67	16:28
90.8	90.9	91.9	89.9	90.2	88.8	88.9	89.2	89.7	91.18	89.63	89.28	90.03	0.03	39.7	40.3	40.3	40.1	63.38	63.42	63.67	63.61	16:29
90.8	91.0	91.9	89.7	90.1	88.7	89.2	89.5	89.8	91.23	89.50	89.48	90.07	0.02	39.8	40.4	40.4	40.2	63.73	63.77	63.79	64.02	16:30
90.8	90.9	91.9	89.9	90.3	88.9	89.1	89.4	89.7	91.21	89.69	89.42	90.11	0.03	39.8	40.4	40.3	40.2	63.58	63.60	63.64	63.79	16:31
90.8	91.0	91.9	89.9	90.3	88.8	89.0	89.3	89.8	91.23	89.69	89.35	90.09	0.03	39.8	40.3	40.4	40.2	63.52	63.65	63.68	63.75	16:32
90.8	90.9	92.0	90.0	90.4	88.9	88.9	89.3	89.8	91.21	89.75	89.35	90.11	0.04	39.8	40.3	40.3	40.2	63.58	63.69	63.76	63.78	16:33
90.7	90.9	91.9	89.9	90.4	88.8	89.0	89.4	89.9	91.16	89.70	89.44	90.10	0.04	39.7	40.3	40.3	40.1	63.64	63.72	63.79	63.82	16:34
90.7	90.8	91.8	89.8	90.4	88.7	89.0	89.5	89.8	91.11	89.63	89.45	90.06	0.04	39.8	40.3	40.3	40.2	63.12	63.17	63.26	63.37	16:35
90.7	90.8	91.8	90.0	90.4	88.8	88.8	89.2	89.8	91.08	89.72	89.26	90.02	0.04	39.8	40.4	40.3	40.1	63.02	63.06	63.08	63.17	16:36
90.7	90.8	91.7	89.8	90.3	88.7	88.9	89.3	89.8	91.05	89.60	89.36	90.00	0.04	39.7	40.3	40.3	40.1	63.22	63.20	63.23	63.39	16:37
90.6	90.8	91.8	89.9	90.1	88.7	89.0	89.3	89.8	91.05	89.55	89.35	89.99	0.03	39.7	40.3	40.3	40.1	63.00	63.06	63.33	63.28	16:38
90.6	90.8	91.7	89.8	90.2	88.6	88.9	89.3	89.8	91.02	89.52	89.33	89.96	0.02	39.8	40.4	40.3	40.2	63.18	63.27	63.23	63.44	16:39
90.7	90.8	91.7	89.8	90.2	88.7	88.8	89.2	89.8	91.03	89.58	89.26	89.96	0.01	39.8	40.3	40.3	40.1	63.05	63.17	63.35	63.36	16:40
90.7	90.8	91.7	89.8	90.3	88.8	88.8	89.2	89.6	91.03	89.63	89.22	89.96	0.00	39.7	40.3	40.3	40.1	63.20	63.25	63.22	63.39	16:41
90.6	90.8	91.7	89.7	90.1	88.6	89.1	89.4	89.7	91.08	89.42	89.39	89.96	0.00	39.7	40.3	40.3	40.1	63.04	63.08	63.31	63.40	16:42
90.6	90.7	91.7	89.8	90.3	88.6	88.8	89.2	89.8	90.98	89.55	89.25	89.93	-0.01	39.7	40.3	40.3	40.1	63.18	63.10	63.14	63.34	16:43
90.6	90.7	91.7	89.8	90.2	88.7	88.8	89.1	89.6	90.99	89.58	89.19	89.92	-0.01	39.7	40.4	40.3	40.1	63.16	63.28	63.32	63.45	16:44
90.6	90.9	91.8	89.7	90.0	88.7	89.0	89.3	89.6	91.08	89.47	89.27	89.94	-0.02	39.7	40.4	40.3	40.2	63.36	63.39	63.46	63.65	16:45
90.5	90.8	91.8	89.8	90.1	88.6	88.9	89.2	89.7	91.03	89.48	89.27	89.93	-0.02	39.7	40.3	40.3	40.1	63.21	63.22	63.32	63.46	16:46
90.5	90.7	91.7	89.8	90.2	88.6	88.8	89.1	89.7	90.96	89.52	89.19	89.89	-0.03	39.7	40.4	40.3	40.1	63.11	63.17	63.30	63.39	16:47
90.6	90.8	91.7	89.7	90.0	88.7	88.9	89.2	89.6	91.03	89.45	89.24	89.91	-0.04	39.7	40.3	40.3	40.1	63.46	63.49	63.55	63.76	16:48
90.5	90.8	91.8	89.8	90.1	88.6	88.8	89.2	89.7	91.03	89.48	89.24	89.92	-0.05	39.7	40.3	40.3	40.1	63.71	63.60	63.48	63.80	16:49
90.5	90.8	91.7	89.7	90.1	88.7	89.1	89.3	89.6	91.00	89.49	89.31	89.93	-0.06	39.7	40.3	40.3	40.1	63.18	63.20	63.27	63.46	16:50
90.6	90.8	91.7	89.6	90.0	88.6	89.0	89.4	89.6	91.04	89.39	89.34	89.93	-0.07	39.7	40.4	40.3	40.1	63.26	63.46	63.50	63.71	16:51

COMMENTS _____

Tested By Frank A. Denney Date 6-21-93 Reviewed By C.L. Rutledge Date 6-22-93

AMPACITY TEST. JOB NUMBER 93-0501. SAMPLE NUMBER 93-0501-07 DATA FILE 3P3C6G07.001 06-21-1993

POSITION 1			POSITION 2			POSITION 3			POSITION AVERAGE			AVG		AMBIENT TEMPERATURE				AMPERES				
Tb	Tw	Tr	Tb	Tw	Tr	Tb	Tw	Tr	T1av	T2av	T3av	Twave	SLOPE	Tam1	Tam2	Tam3	Taav	Ib	Iw	Ir	I'	TIME
9[illegible]	[illegible]0.8	91.7	89.7	90.2	88.7	88.8	89.2	89.6	91.08	89.55	89.21	89.95	-0.08	39.7	40.4	40.3	40.1	63.31	63.25	63.39	63.54	16:52
90.7	90.8	91.7	89.8	90.2	88.7	88.8	89.1	89.7	91.05	89.55	89.21	89.94	-0.09	39.7	40.3	40.3	40.1	63.30	63.26	63.62	63.56	16:53
90.7	90.8	91.7	89.7	90.1	88.7	88.9	89.3	89.6	91.05	89.51	89.26	89.94	-0.10	39.8	40.4	40.3	40.2	63.47	63.41	63.55	63.74	16:54
90.7	90.8	91.8	89.7	90.2	88.7	88.9	89.3	89.6	91.10	89.54	89.28	89.97	-0.11	39.7	40.4	40.3	40.1	63.38	63.36	63.68	63.71	16:55
90.7	90.8	91.8	89.8	90.2	88.8	89.1	89.3	89.6	91.13	89.59	89.36	90.03	-0.12	39.8	40.4	40.3	40.2	63.64	63.69	63.76	63.92	16:56
90.7	90.8	91.8	89.8	90.3	88.8	88.9	89.3	89.7	91.12	89.62	89.30	90.01	-0.12	39.7	40.3	40.3	40.1	63.62	63.62	63.72	63.85	16:57
90.7	90.9	91.9	89.7	90.1	88.7	89.2	89.5	89.7	91.16	89.48	89.45	90.03	-0.12	39.7	40.3	40.4	40.1	63.37	63.49	63.49	63.71	16:58
90.7	90.9	91.8	89.7	90.1	88.7	89.1	89.5	89.7	91.13	89.48	89.45	90.02	-0.12	39.7	40.3	40.3	40.1	63.40	63.49	63.47	63.71	16:59
90.6	90.8	91.8	89.9	90.3	88.8	88.9	89.3	89.8	91.04	89.66	89.32	90.01	-0.13	39.7	40.4	40.3	40.2	63.44	63.53	63.50	63.64	17:00
90.7	90.9	91.8	89.8	90.1	88.8	88.9	89.2	89.7	91.12	89.57	89.29	90.00	-0.13	39.7	40.4	40.4	40.2	63.48	63.58	63.54	63.73	17:01
90.6	90.9	91.8	89.7	90.1	88.6	89.1	89.5	89.8	91.13	89.48	89.45	90.02	-0.13	39.7	40.4	40.3	40.1	63.37	63.37	63.44	63.62	17:02
90.6	90.8	91.8	89.9	90.3	88.7	88.9	89.2	89.8	91.08	89.65	89.29	90.01	-0.13	39.7	40.3	40.4	40.1	63.54	63.49	63.59	63.68	17:03
90.6	90.8	91.8	89.8	90.2	88.6	89.1	89.4	89.8	91.10	89.54	89.44	90.03	-0.13	39.7	40.4	40.3	40.1	63.62	63.46	63.36	63.65	17:04
90.6	90.8	91.8	89.8	90.2	88.7	89.1	89.4	89.9	91.10	89.55	89.48	90.04	-0.12	39.7	40.3	40.3	40.1	63.44	63.57	63.55	63.70	17:05
90.7	90.8	91.8	89.8	90.4	88.7	89.0	89.5	89.8	91.07	89.61	89.45	90.05	-0.11	39.8	40.3	40.3	40.1	63.28	63.51	63.64	63.69	17:06
90.7	90.9	91.7	89.7	90.2	88.8	89.0	89.4	89.7	91.11	89.57	89.36	90.01	-0.11	39.7	40.3	40.4	40.2	63.32	63.40	63.36	63.60	17:07
90.6	90.9	91.9	89.8	90.1	88.6	89.0	89.4	89.8	91.12	89.51	89.40	90.01	-0.10	39.7	40.4	40.3	40.2	63.12	63.22	63.49	63.49	17:08
90.6	90.8	91.8	89.8	90.2	88.6	88.9	89.3	89.8	91.04	89.55	89.33	89.97	-0.10	39.8	40.4	40.4	40.2	63.30	63.31	63.40	63.54	17:09
90.7	90.8	91.7	89.8	90.3	88.8	88.9	89.3	89.7	91.07	89.65	89.29	90.00	-0.10	39.7	40.4	40.3	40.1	63.28	63.37	63.67	63.63	17:10
90.7	90.8	91.8	89.8	90.2	88.8	89.1	89.4	89.7	91.11	89.58	89.38	90.02	-0.10	39.8	40.4	40.3	40.2	63.44	63.49	63.54	63.73	17:11
90.7	90.8	91.8	89.8	90.3	88.8	89.1	89.4	89.7	91.13	89.65	89.38	90.06	-0.09	39.7	40.4	40.4	40.1	63.46	63.56	63.57	63.71	17:12
90.7	90.8	91.8	89.9	90.4	88.8	88.9	89.3	89.8	91.09	89.69	89.29	90.02	-0.09	39.7	40.3	40.3	40.1	63.43	63.54	63.56	63.64	17:13
90.7	90.9	91.8	89.7	90.1	88.6	89.1	89.6	89.8	91.13	89.47	89.49	90.03	-0.08	39.7	40.3	40.3	40.1	63.43	63.50	63.53	63.73	17:14
90.6	90.9	91.8	89.7	90.1	88.6	89.0	89.5	89.8	91.11	89.46	89.44	90.00	-0.08	39.7	40.3	40.3	40.1	63.44	63.50	63.50	63.71	17:15
90.6	90.7	91.7	89.9	90.3	88.7	88.9	89.3	89.8	91.03	89.66	89.33	90.01	-0.08	39.7	40.4	40.4	40.1	63.41	63.50	63.47	63.60	17:16
90.7	90.8	91.7	89.8	90.3	88.8	89.0	89.3	89.7	91.05	89.65	89.31	90.00	-0.08	39.7	40.4	40.4	40.2	63.34	63.44	63.40	63.58	17:17
90.6	90.8	91.8	89.9	90.2	88.7	88.9	89.3	89.8	91.06	89.58	89.32	89.99	-0.07	39.7	40.3	40.4	40.1	63.24	63.32	63.29	63.45	17:18
90.6	90.8	91.8	89.9	90.3	88.7	88.9	89.3	89.8	91.03	89.61	89.31	89.98	-0.07	39.7	40.4	40.4	40.2	63.36	63.47	63.38	63.58	17:19
90.7	90.9	91.7	89.7	90.2	88.7	89.1	89.5	89.7	91.09	89.55	89.41	90.02	-0.06	39.7	40.3	40.3	40.1	63.49	63.54	63.60	63.77	17:20
90.7	90.8	91.8	89.8	90.3	88.8	88.9	89.3	89.7	91.09	89.67	89.28	90.01	-0.05	39.7	40.3	40.4	40.1	63.41	63.29	63.49	63.57	17:21
90.7	90.9	91.8	89.7	90.1	88.7	89.1	89.6	89.7	91.15	89.49	89.47	90.04	-0.04	39.7	40.3	40.3	40.1	63.45	63.42	63.52	63.70	17:22
90.6	90.8	91.8	89.9	90.2	88.7	88.9	89.3	89.9	91.07	89.59	89.36	90.00	-0.03	39.8	40.4	40.4	40.2	63.32	63.44	63.65	63.66	17:23
90.7	90.9	91.8	89.8	90.2	88.7	89.1	89.5	89.7	91.16	89.54	89.45	90.05	-0.01	39.8	40.4	40.4	40.2	63.60	63.78	63.68	63.94	17:24
90[illegible]	[illegible]0.8	91.9	89.9	90.3	88.8	88.9	89.3	89.9	91.14	89.65	89.38	90.06	-0.00	39.7	40.3	40.3	40.1	63.57	63.62	63.60	63.71	17:25
9[illegible]	[illegible]0.9	91.9	89.9	90.2	88.7	89.0	89.4	89.9	91.13	89.58	89.45	90.05	0.01	39.7	40.3	40.3	40.1	63.50	63.51	63.55	63.67	17:26
90.6	90.9	91.8	89.8	90.1	88.6	89.2	89.5	89.8	91.11	89.51	89.49	90.04	0.02	39.8	40.3	40.3	40.1	63.47	63.51	63.53	63.71	17:27
90.6	90.8	91.9	89.9	90.3	88.7	88.9	89.3	89.9	91.12	89.64	89.39	90.05	0.03	39.7	40.3	40.3	40.1	63.37	63.33	63.42	63.50	17:28
90.8	90.8	91.8	89.9	90.3	88.8	88.9	89.3	89.7	91.14	89.70	89.33	90.06	0.03	39.7	40.3	40.4	40.1	63.43	63.38	63.52	63.59	17:29
90.7	90.8	91.8	89.9	90.4	88.8	88.9	89.3	89.8	91.10	89.71	89.32	90.04	0.04	39.7	40.4	40.4	40.2	63.48	63.40	63.51	63.59	17:30
90.8	90.8	91.8	89.9	90.4	88.9	89.2	89.4	89.7	91.12	89.71	89.42	90.09	0.06	39.8	40.3	40.3	40.1	63.45	63.42	63.52	63.61	17:31
90.6	90.8	91.9	89.9	90.2	88.7	89.2	89.4	89.9	91.12	89.58	89.47	90.06	0.08	39.7	40.4	40.4	40.2	63.38	63.36	63.19	63.49	17:32
90.6	90.9	91.8	89.8	90.1	88.6	89.1	89.4	89.8	91.11	89.52	89.45	90.03	0.09	39.7	40.4	40.3	40.1	63.38	63.41	63.18	63.51	17:33
90.6	90.8	91.8	89.8	90.1	88.6	89.0	89.5	89.8	91.08	89.49	89.45	90.00	0.10	39.7	40.3	40.4	40.2	63.10	63.14	63.18	63.35	17:34
90.6	90.8	91.7	89.7	90.1	88.5	89.1	89.5	89.8	91.06	89.43	89.45	89.98	0.11	39.8	40.4	40.4	40.2	63.42	63.45	63.25	63.64	17:35
90.6	90.8	91.7	89.7	90.1	88.5	89.0	89.5	89.8	91.06	89.45	89.42	89.98	0.11	39.7	40.4	40.4	40.2	63.24	63.30	63.30	63.52	17:36
90.7	90.8	91.6	89.8	90.3	88.8	88.9	89.3	89.6	91.03	89.62	89.28	89.98	0.11	39.8	40.4	40.4	40.2	63.29	63.33	63.17	63.50	17:37
90.7	90.8	91.7	89.8	90.3	88.8	89.0	89.3	89.6	91.04	89.62	89.31	89.99	0.10	39.8	40.4	40.4	40.2	63.12	63.22	63.22	63.41	17:38
90.6	90.7	91.7	89.9	90.3	88.7	88.9	89.2	89.7	91.01	89.63	89.25	89.96	0.10	39.7	40.4	40.3	40.1	63.24	63.25	63.09	63.36	17:39
90.6	90.7	91.7	89.9	90.3	88.7	88.8	89.2	89.7	90.98	89.62	89.23	89.95	0.09	39.7	40.4	40.4	40.2	63.15	63.24	63.06	63.32	17:40
90.7	90.8	91.7	89.8	90.2	88.7	89.0	89.3	89.6	91.05	89.57	89.31	89.98	0.08	39.7	40.4	40.3	40.2	63.26	63.38	63.34	63.55	17:41
90.7	90.8	91.7	89.8	90.3	88.7	88.9	89.3	89.6	91.06	89.59	89.26	89.97	0.08	39.8	40.4	40.4	40.2	63.35	63.48	63.44	63.68	17:42
90.6	90.7	91.8	89.8	90.3	88.7	88.8	89.2	89.7	91.00	89.61	89.24	89.95	0.06	39.7	40.3	40.4	40.2	63.38	63.44	63.43	63.60	17:43
90.6	90.7	91.7	89.8	90.3	88.8	88.9	89.3	89.6	91.02	89.59	89.27	89.96	0.05	39.7	40.3	40.4	40.1	63.40	63.48	63.45	63.65	17:44
90.7	90.8	91.7	89.7	90.1	88.7	89.1	89.5	89.6	91.07	89.49	89.38	89.98	0.04	39.8	40.4	40.4	40.2	63.40	63.54	63.50	63.77	17:45
90.6	90.8	91.8	89.7	90.1	88.6	88.9	89.4	89.8	91.06	89.45	89.37	89.96	0.03	39.7	40.4	40.3	40.1	63.44	63.58	63.51	63.75	17:46
90.5	90.8	91.8	89.8	90.1	88.6	88.9	89.3	89.8	91.02	89.47	89.35	89.95	0.02	39.7	40.4	40.3	40.1	63.50	63.69	63.55	63.80	17:47
90.6	90.7	91.7	89.9	90.3	88.7	88.9	89.2	89.8	91.00	89.63	89.27	89.97	0.00	39.8	40.4	40.4	40.2	63.47	63.63	63.48	63.70	17:48
90.7	90.8	91.7	89.8	90.3	88.8	89.0	89.3	89.7	91.06	89.63	89.30	90.00	-0.00	39.7	40.3	40.4	40.1	63.19	63.29	63.44	63.50	17:49
90.6	90.8	91.8	89.9	90.3	88.8	88.9	89.2	89.7	91.05	89.65	89.27	89.99	-0.01	39.7	40.4	40.3	40.1	63.23	63.26	63.26	63.41	17:50
90.6	90.7	91.7	89.9	90.3	88.7	88.9	89.2	89.8	91.00	89.63	89.28	89.97	-0.02	39.8	40.4	40.4	40.2	63.20	63.32	63.48	63.52	17:51

COMMENTS _____

Tested By Frank A. Deiney Date 6-21-93 Reviewed By C. L. Rutledge Date 6-22-93

AMPACITY TEST. JOB NUMBER 93-0501. SAMPLE NUMBER 93-0501-08 DATA FILE 3p3c6g08.002 06-16-1993

POSITION 1			POSITION 2			POSITION 3			POSITION AVERAGE			AVG		AMBIENT TEMPERATURE				AMPERES				
Tb	Tw	Tr	Tb	Tw	Tr	Tb	Tw	Tr	T1av	T2av	T3av	Twave	SLOPE	Tam1	Tam2	Tam3	Taav	Ib	Iw	Ir	I'	TIME
[illegible]	90.4	91.4	89.4	88.3	88.5	89.1	90.3	91.1	89.86	88.72	90.17	89.59	-0.01	40.2	40.0	40.3	40.2	63.34	63.57	63.58	63.94	16:00
87.8	90.3	91.3	89.4	88.5	88.7	89.1	90.2	91.0	89.81	88.87	90.09	89.59	-0.02	40.3	40.0	40.3	40.2	63.44	63.71	63.43	63.96	16:01
87.7	90.4	91.4	89.3	88.2	88.5	89.2	90.4	91.1	89.85	88.68	90.23	89.55	-0.03	40.2	40.1	40.3	40.2	63.70	63.76	63.51	64.16	16:02
87.7	90.3	91.3	89.4	88.4	88.6	89.0	90.1	91.0	89.76	88.79	90.06	89.54	-0.05	40.2	39.9	40.2	40.1	63.70	63.84	63.58	64.10	16:03
87.7	90.5	91.4	89.3	88.2	88.5	89.1	90.4	91.0	89.85	88.64	90.18	89.55	-0.06	40.1	39.9	40.3	40.1	63.71	63.84	63.58	64.19	16:04
87.7	90.4	91.3	89.3	88.2	88.5	89.1	90.4	91.1	89.82	88.68	90.21	89.57	-0.07	40.1	40.0	40.3	40.1	63.82	64.00	63.85	64.33	16:05
87.9	90.5	91.3	89.3	88.3	88.6	89.1	90.3	90.9	89.87	88.72	90.12	89.57	-0.08	40.3	40.0	40.3	40.2	63.69	63.94	63.68	64.30	16:06
87.8	90.4	91.3	89.5	88.4	88.7	89.2	90.2	91.0	89.82	88.87	90.14	89.61	-0.09	40.2	40.0	40.3	40.1	63.41	63.77	63.73	64.01	16:07
87.9	90.5	91.4	89.3	88.4	88.7	89.3	90.3	90.9	89.93	88.80	90.17	89.63	-0.09	40.2	39.9	40.2	40.1	63.81	64.05	63.84	64.34	16:08
87.8	90.5	91.5	89.3	88.2	88.5	89.1	90.4	91.1	89.92	88.69	90.19	89.60	-0.10	40.3	39.9	40.2	40.1	63.62	63.84	63.85	64.21	16:09
87.8	90.4	91.5	89.5	88.5	88.7	89.1	90.2	91.1	89.90	88.87	90.11	89.63	-0.10	40.3	39.9	40.2	40.1	63.76	63.93	63.75	64.17	16:10
87.8	90.4	91.4	89.5	88.3	88.6	89.2	90.2	91.1	89.87	88.80	90.19	89.62	-0.10	40.1	40.0	40.3	40.1	63.70	63.87	63.64	64.10	16:11
87.8	90.5	91.5	89.4	88.3	88.5	89.1	90.3	91.1	89.92	88.74	90.16	89.61	-0.11	40.2	39.9	40.3	40.1	63.64	63.89	63.60	64.13	16:12
87.8	90.5	91.5	89.3	88.2	88.4	89.2	90.4	91.1	89.95	88.65	90.23	89.61	-0.11	40.1	40.0	40.2	40.1	63.68	63.86	63.62	64.16	16:13
87.8	90.4	91.3	89.5	88.5	88.7	89.2	90.2	91.0	89.85	88.87	90.15	89.62	-0.11	40.1	39.9	40.2	40.1	63.49	63.65	63.45	63.88	16:14
87.9	90.5	91.4	89.4	88.4	88.7	89.2	90.2	90.9	89.92	88.80	90.11	89.61	-0.12	40.1	40.0	40.3	40.1	63.53	63.72	63.50	64.00	16:15
87.8	90.6	91.4	89.2	88.2	88.5	89.1	90.4	91.0	89.95	88.66	90.17	89.59	-0.12	40.3	39.9	40.2	40.2	63.42	63.55	63.62	64.05	16:16
87.9	90.5	91.3	89.3	88.4	88.6	89.2	90.3	90.9	89.89	88.78	90.13	89.60	-0.13	40.2	39.9	40.2	40.1	63.64	63.75	63.62	64.11	16:17
87.7	90.4	91.5	89.3	88.2	88.5	89.1	90.3	91.1	89.88	88.66	90.14	89.56	-0.13	40.2	39.9	40.2	40.1	63.68	63.82	63.64	64.14	16:18
87.9	90.5	91.4	89.2	88.3	88.6	89.3	90.4	90.9	89.92	88.70	90.22	89.62	-0.14	40.2	40.0	40.2	40.1	63.80	63.87	63.72	64.28	16:19
87.8	90.4	91.4	89.4	88.4	88.7	89.1	90.1	91.0	89.86	88.85	90.07	89.59	-0.14	40.3	39.9	40.2	40.1	63.79	63.94	63.76	64.22	16:20
87.8	90.4	91.5	89.4	88.3	88.5	89.1	90.3	91.1	89.89	88.74	90.15	89.59	-0.14	40.3	39.9	40.2	40.1	63.80	64.00	63.80	64.26	16:21
87.8	90.6	91.4	89.2	88.2	88.5	89.3	90.5	91.1	89.95	88.62	90.27	89.61	-0.14	40.1	39.9	40.2	40.0	63.82	63.94	63.76	64.27	16:22
87.8	90.4	91.3	89.4	88.4	88.6	89.1	90.1	91.0	89.86	88.83	90.07	89.59	-0.15	40.2	39.9	40.3	40.1	63.59	63.82	63.81	64.12	16:23
87.8	90.5	91.5	89.3	88.2	88.4	89.2	90.5	91.1	89.92	88.63	90.24	89.60	-0.15	40.1	39.9	40.2	40.1	63.55	63.71	63.57	64.04	16:24
87.9	90.6	91.4	89.2	88.2	88.5	89.1	90.5	91.0	89.95	88.63	90.20	89.60	-0.15	40.2	39.9	40.2	40.1	63.47	63.63	63.64	64.07	16:25
87.9	90.6	91.4	89.2	88.2	88.5	89.3	90.5	91.0	89.93	88.65	90.25	89.61	-0.15	40.1	39.9	40.2	40.0	63.82	63.94	63.68	64.26	16:26
87.8	90.4	91.4	89.4	88.4	88.6	89.0	90.1	91.0	89.85	88.81	90.07	89.58	-0.15	40.2	39.9	40.2	40.1	63.77	63.86	63.60	64.12	16:27
87.9	90.5	91.4	89.3	88.3	88.6	89.2	90.4	90.9	89.96	88.74	90.20	89.63	-0.15	40.3	39.9	40.2	40.1	63.77	63.84	63.58	64.20	16:28
87.7	90.4	91.4	89.4	88.3	88.5	89.0	90.2	91.1	89.85	88.72	90.10	89.56	-0.15	40.2	39.9	40.2	40.1	63.80	63.86	63.48	64.14	16:29
87.8	90.6	91.4	89.2	88.1	88.4	89.0	90.4	91.0	89.93	88.57	90.15	89.55	-0.16	40.2	40.0	40.2	40.1	63.81	63.90	63.58	64.29	16:30
87.9	90.6	91.4	89.2	88.3	88.6	89.3	90.4	90.9	89.96	88.70	90.21	89.62	-0.15	40.2	40.0	40.2	40.1	63.82	63.91	63.58	64.27	16:31
87.9	90.5	91.4	89.2	88.3	88.6	89.1	90.3	90.9	89.92	88.71	90.11	89.58	-0.16	40.2	39.8	40.1	40.1	63.34	63.43	63.32	63.82	16:32
[illegible]	90.4	91.3	89.2	88.3	88.6	89.2	90.3	90.9	89.86	88.67	90.12	89.55	-0.16	40.2	39.9	40.2	40.1	63.36	63.46	63.15	63.83	16:33
[illegible]	90.4	91.3	89.2	88.2	88.5	88.9	90.2	90.9	89.85	88.64	90.00	89.50	-0.17	40.2	39.9	40.3	40.1	63.36	63.46	63.34	63.92	16:34
87.8	90.5	91.4	89.1	88.1	88.4	89.2	90.3	90.9	89.90	88.53	90.12	89.52	-0.17	40.1	39.8	40.2	40.1	63.80	63.82	63.58	64.27	16:35
87.7	90.4	91.4	89.2	88.1	88.4	89.2	90.3	91.1	89.85	88.59	90.17	89.54	-0.17	40.1	39.9	40.2	40.1	63.76	63.87	63.58	64.20	16:36
87.9	90.5	91.3	89.2	88.2	88.5	89.1	90.3	90.9	89.90	88.65	90.11	89.55	-0.17	40.2	39.9	40.2	40.1	63.82	63.94	63.66	64.32	16:37
87.8	90.6	91.4	89.1	88.2	88.5	89.0	90.3	90.9	89.95	88.60	90.08	89.54	-0.18	40.1	39.9	40.2	40.1	63.76	63.83	63.53	64.22	16:38
87.7	90.4	91.4	89.2	88.1	88.4	89.1	90.3	91.0	89.86	88.54	90.13	89.51	-0.18	40.2	39.9	40.2	40.1	63.85	63.87	63.62	64.28	16:39
87.8	90.3	91.3	89.3	88.3	88.6	89.1	90.1	90.9	89.82	88.75	90.02	89.53	-0.18	40.2	39.9	40.1	40.1	63.67	63.72	63.43	64.04	16:40
87.7	90.4	91.5	89.3	88.1	88.4	89.0	90.2	91.1	89.88	88.59	90.09	89.52	-0.18	40.2	39.9	40.2	40.1	63.56	63.61	63.53	64.04	16:41
87.7	90.4	91.3	89.3	88.2	88.4	88.9	90.2	91.0	89.80	88.62	90.05	89.49	-0.19	40.3	39.9	40.2	40.1	63.59	63.62	63.42	64.03	16:42
87.8	90.5	91.3	89.1	88.2	88.5	89.0	90.3	90.8	89.87	88.60	90.04	89.50	-0.19	40.2	39.9	40.2	40.1	63.50	63.82	63.77	64.25	16:43
87.8	90.5	91.4	89.1	88.1	88.4	89.2	90.4	90.9	89.87	88.51	90.20	89.53	-0.19	40.1	39.9	40.2	40.1	63.84	64.05	63.82	64.42	16:44
87.9	90.5	91.4	89.2	88.3	88.6	89.2	90.3	90.9	89.92	88.70	90.12	89.58	-0.18	40.1	39.9	40.1	40.1	63.74	63.92	63.68	64.24	16:45
87.8	90.4	91.5	89.3	88.2	88.5	89.2	90.2	91.1	89.91	88.68	90.17	89.59	-0.17	40.2	39.9	40.2	40.1	63.70	63.95	63.72	64.22	16:46
87.9	90.6	91.5	89.2	88.2	88.5	89.3	90.4	90.9	90.03	88.60	90.21	89.61	-0.16	40.2	39.9	40.2	40.1	63.72	63.94	63.78	64.34	16:47
87.8	90.4	91.5	89.4	88.2	88.4	89.0	90.2	91.1	89.91	88.68	90.10	89.56	-0.15	40.2	40.0	40.2	40.1	63.71	63.98	63.82	64.27	16:48
87.9	90.5	91.3	89.2	88.3	88.6	89.3	90.3	90.9	89.94	88.70	90.15	89.60	-0.14	40.2	40.0	40.3	40.1	63.58	63.88	63.69	64.22	16:49
87.9	90.4	91.3	89.4	88.4	88.6	89.0	90.1	91.0	89.87	88.77	90.04	89.56	-0.14	40.2	39.9	40.2	40.1	63.39	63.69	63.71	64.01	16:50
87.9	90.6	91.4	89.2	88.2	88.4	89.1	90.5	90.9	89.96	88.59	90.18	89.58	-0.13	40.1	39.9	40.2	40.0	63.58	63.78	63.58	64.14	16:51
87.9	90.5	91.3	89.2	88.2	88.5	89.2	90.4	90.9	89.92	88.64	90.17	89.58	-0.12	40.1	39.9	40.2	40.1	63.49	63.80	63.82	64.21	16:52
87.9	90.6	91.4	89.2	88.2	88.5	89.1	90.4	90.9	89.95	88.60	90.12	89.56	-0.11	40.2	39.9	40.2	40.1	63.47	63.71	63.54	64.10	16:53
87.8	90.4	91.3	89.3	88.3	88.5	89.1	90.1	90.9	89.82	88.68	90.03	89.51	-0.11	40.2	40.0	40.2	40.1	63.48	63.74	63.50	64.03	16:54
87.8	90.4	91.4	89.4	88.3	88.5	89.0	90.1	91.0	89.89	88.75	90.03	89.55	-0.10	40.2	39.9	40.1	40.0	63.68	63.89	63.70	64.13	16:55
87.9	90.6	91.5	89.1	88.1	88.4	89.0	90.4	90.9	89.98	88.56	90.10	89.55	-0.09	40.3	39.9	40.3	40.2	63.60	63.82	63.65	64.27	16:56
87.8	90.4	91.4	89.4	88.3	88.5	89.0	90.1	91.0	89.88	88.74	90.04	89.55	-0.08	40.1	39.9	40.2	40.1	63.74	64.02	63.76	64.23	16:57
87.9	90.5	91.4	89.2	88.3	88.6	89.2	90.3	90.9	89.94	88.69	90.09	89.57	-0.07	40.2	39.9	40.2	40.1	63.60	63.81	63.61	64.16	16:58
87.8	90.6	91.5	89.1	88.1	88.3	89.1	90.4	91.0	89.96	88.51	90.15	89.54	-0.06	40.3	40.0	40.2	40.1	63.44	63.76	63.71	64.21	16:59

COMMENTS _____

Tested By Frank A. Dewey Date 6-16-93 Reviewed By C L Rutledge Date 6-17-93

AMPACITY TEST. JOB NUMBER 93-0501. SAMPLE NUMBER 93-0501-08 DATA FILE 3p3c6g08.002 06-16-1993

POSITION 1			POSITION 2			POSITION 3			POSITION AVERAGE			AVG		AMBIENT TEMPERATURE				AMPERES				
Tb	Tw	Tr	Tb	Tw	Tr	Tb	Tw	Tr	T1av	T2av	T3av	Twave	SLOPE	Tam1	Tam2	Tam3	Taav	Ib	Iw	Ir	I'	TIME
87.8	90.4	91.5	89.3	88.3	88.5	89.0	90.2	91.0	89.90	88.69	90.05	89.55	-0.06	40.1	39.9	40.2	40.1	63.78	64.04	63.77	64.28	17:00
87.8	90.6	91.4	89.2	88.1	88.4	89.2	90.5	91.0	89.94	88.55	90.22	89.57	-0.06	40.3	39.9	40.2	40.1	63.62	63.88	63.86	64.30	17:01
87.9	90.6	91.4	89.2	88.2	88.5	89.2	90.4	90.9	89.96	88.61	90.17	89.58	-0.06	40.1	39.9	40.2	40.1	63.70	63.88	63.66	64.25	17:02
87.9	90.5	91.4	89.3	88.3	88.6	89.0	90.2	90.9	89.96	88.74	90.06	89.59	-0.06	40.0	39.9	40.2	40.1	63.66	63.86	63.62	64.14	17:03
87.8	90.4	91.5	89.3	88.3	88.5	89.1	90.1	91.0	89.90	88.70	90.05	89.55	-0.06	40.2	39.9	40.2	40.1	63.54	63.81	63.58	64.06	17:04
87.8	90.5	91.6	89.3	88.2	88.4	89.2	90.3	91.0	89.94	88.64	90.17	89.58	-0.06	40.1	39.9	40.2	40.1	63.48	63.82	63.52	64.04	17:05
87.8	90.5	91.5	89.2	88.1	88.3	89.1	90.3	91.0	89.93	88.55	90.11	89.53	-0.07	40.1	39.9	40.1	40.0	63.56	63.88	63.65	64.15	17:06
87.9	90.5	91.3	89.2	88.3	88.5	89.1	90.3	90.9	89.90	88.67	90.08	89.55	-0.06	40.2	39.9	40.2	40.1	63.58	63.86	63.69	64.20	17:07
87.8	90.4	91.3	89.3	88.2	88.4	89.0	90.1	91.0	89.83	88.65	90.05	89.51	-0.06	40.1	39.9	40.3	40.1	63.52	63.84	63.84	64.16	17:08
87.9	90.4	91.3	89.3	88.3	88.6	89.1	90.2	90.9	89.89	88.72	90.07	89.56	-0.06	40.1	39.9	40.2	40.1	63.66	63.85	63.63	64.16	17:09
87.8	90.4	91.3	89.3	88.3	88.5	89.1	90.2	90.9	89.84	88.72	90.06	89.54	-0.06	40.2	39.9	40.2	40.1	63.44	63.74	63.70	64.07	17:10
87.9	90.5	91.3	89.2	88.2	88.5	89.2	90.3	90.9	89.88	88.65	90.14	89.56	-0.05	40.3	39.9	40.1	40.1	63.74	63.93	63.68	64.29	17:11
87.9	90.6	91.4	89.2	88.2	88.5	89.2	90.4	90.9	89.99	88.59	90.17	89.58	-0.05	40.2	39.9	40.2	40.1	63.77	63.99	63.67	64.33	17:12
87.9	90.6	91.3	89.2	88.2	88.5	89.2	90.4	90.9	89.93	88.61	90.16	89.57	-0.04	40.1	40.0	40.3	40.1	63.72	63.91	63.66	64.31	17:13
87.9	90.6	91.5	89.1	88.1	88.4	89.1	90.4	90.9	90.00	88.56	90.13	89.56	-0.04	40.2	40.0	40.3	40.1	63.66	63.86	63.60	64.28	17:14
87.8	90.6	91.4	89.2	88.1	88.3	89.0	90.3	91.0	89.94	88.53	90.13	89.53	-0.04	40.1	40.0	40.2	40.1	63.53	63.69	63.49	64.11	17:15
87.8	90.5	91.5	89.2	88.1	88.4	89.1	90.3	91.0	89.89	88.57	90.12	89.53	-0.04	40.1	39.9	40.2	40.1	63.40	63.64	63.44	63.97	17:16
87.7	90.5	91.4	89.2	88.1	88.3	89.2	90.4	91.0	89.85	88.50	90.21	89.52	-0.04	40.2	40.0	40.2	40.1	63.40	63.60	63.64	64.08	17:17
87.8	90.4	91.3	89.3	88.3	88.5	88.9	90.1	90.9	89.82	88.68	89.97	89.49	-0.04	40.2	40.0	40.2	40.1	63.68	63.75	63.50	64.11	17:18
87.8	90.6	91.4	89.1	88.0	88.3	89.2	90.4	90.9	89.93	88.48	90.19	89.53	-0.04	40.2	39.9	40.2	40.1	63.52	63.72	63.67	64.22	17:19
87.7	90.4	91.3	89.3	88.2	88.4	89.2	90.2	91.0	89.81	88.61	90.12	89.51	-0.04	40.1	40.0	40.3	40.1	63.62	63.83	63.55	64.15	17:20
87.9	90.4	91.4	89.2	88.3	88.5	88.9	90.1	90.9	89.89	88.68	89.97	89.51	-0.04	40.2	40.0	40.2	40.1	63.62	63.77	63.54	64.15	17:21
87.9	90.4	91.3	89.2	88.3	88.5	89.1	90.2	90.9	89.88	88.66	90.06	89.54	-0.04	40.3	40.0	40.2	40.2	63.47	63.65	63.45	64.06	17:22
87.7	90.4	91.4	89.2	88.1	88.3	89.1	90.3	91.0	89.84	88.52	90.12	89.50	-0.04	40.2	39.9	40.2	40.1	63.63	63.80	63.54	64.18	17:23
87.8	90.5	91.3	89.1	88.0	88.4	89.2	90.4	90.9	89.88	88.49	90.17	89.51	-0.04	40.2	39.9	40.2	40.1	63.52	63.74	63.70	64.24	17:24
87.7	90.4	91.3	89.2	88.1	88.4	89.2	90.2	91.0	89.80	88.59	90.12	89.50	-0.04	40.3	39.9	40.2	40.1	63.70	63.83	63.62	64.22	17:25
87.9	90.5	91.4	89.1	88.2	88.5	89.0	90.3	90.8	89.90	88.58	90.05	89.51	-0.04	40.2	40.0	40.2	40.1	63.18	63.29	63.29	63.81	17:26
87.8	90.3	91.2	89.2	88.2	88.5	89.1	90.1	90.9	89.79	88.66	90.02	89.49	-0.04	40.1	40.0	40.2	40.1	63.50	63.56	63.41	63.96	17:27
87.8	90.3	91.3	89.3	88.2	88.5	89.1	90.0	90.9	89.78	88.65	90.00	89.48	-0.04	40.2	39.9	40.2	40.1	63.68	63.76	63.77	64.22	17:28
87.8	90.4	91.4	89.3	88.3	88.5	89.0	90.1	90.9	89.86	88.68	89.97	89.50	-0.04	40.3	39.9	40.2	40.1	63.59	63.65	63.72	64.14	17:29
87.8	90.3	91.4	89.3	88.2	88.5	89.2	90.1	90.9	89.84	88.67	90.07	89.53	-0.04	40.2	39.9	40.2	40.1	63.62	63.75	63.75	64.17	17:30
87.8	90.4	91.4	89.2	88.1	88.3	89.2	90.2	91.0	89.85	88.53	90.11	89.50	-0.04	40.2	39.9	40.2	40.1	63.62	63.79	63.76	64.23	17:31
[illegible]	90.6	91.4	89.1	88.0	88.4	89.0	90.3	90.9	89.96	88.50	90.08	89.51	-0.04	40.2	40.0	40.2	40.1	63.89	64.04	63.88	64.51	17:32
[illegible]	90.5	91.5	89.2	88.1	88.3	89.0	90.2	91.0	89.90	88.55	90.09	89.51	-0.04	40.1	39.9	40.2	40.1	63.85	64.07	64.07	64.49	17:33
87.8	90.5	91.5	89.3	88.2	88.4	89.0	90.2	91.1	89.92	88.60	90.09	89.54	-0.04	40.3	40.0	40.2	40.2	64.00	64.16	63.95	64.54	17:34
87.8	90.6	91.5	89.2	88.1	88.3	89.2	90.4	91.0	89.97	88.53	90.19	89.56	-0.04	40.2	40.0	40.2	40.1	63.74	64.03	63.96	64.46	17:35
87.8	90.6	91.5	89.1	88.1	88.3	89.1	90.4	91.0	90.00	88.52	90.16	89.56	-0.04	40.1	39.9	40.3	40.1	63.64	63.90	63.64	64.26	17:36
87.9	90.6	91.4	89.1	88.1	88.4	89.3	90.5	90.9	89.97	88.55	90.23	89.58	-0.04	40.3	39.9	40.3	40.2	63.52	63.72	63.44	64.14	17:37
87.9	90.5	91.4	89.2	88.3	88.5	89.2	90.3	90.9	89.93	88.66	90.13	89.58	-0.03	40.1	39.9	40.2	40.1	63.44	63.65	63.43	63.99	17:38
87.9	90.5	91.4	89.3	88.3	88.6	89.0	90.1	90.9	89.90	88.72	90.01	89.54	-0.03	40.2	39.9	40.2	40.1	63.98	64.09	63.93	64.46	17:39
87.8	90.5	91.5	89.3	88.2	88.4	89.2	90.3	91.1	89.94	88.60	90.18	89.57	-0.03	40.2	40.0	40.3	40.1	63.95	64.04	63.86	64.43	17:40
87.9	90.7	91.6	89.1	88.1	88.4	89.1	90.4	91.0	90.04	88.55	90.19	89.59	-0.03	40.3	40.0	40.2	40.2	64.15	64.17	64.11	64.72	17:41
86.0	90.6	91.5	89.3	88.4	88.6	89.2	90.3	91.0	90.02	88.78	90.16	89.65	-0.02	40.1	39.9	40.2	40.1	63.88	63.94	64.07	64.39	17:42
87.9	90.5	91.6	89.4	88.4	88.6	89.3	90.2	91.1	90.03	88.81	90.21	89.68	-0.02	40.1	40.0	40.3	40.1	64.00	64.01	63.93	64.36	17:43
87.9	90.5	91.6	89.4	88.3	88.5	89.3	90.3	91.1	90.02	88.71	90.22	89.65	-0.01	40.3	40.0	40.2	40.2	63.64	63.70	63.76	64.14	17:44
87.9	90.7	91.6	89.2	88.1	88.4	89.2	90.4	91.1	90.07	88.57	90.22	89.62	0.00	40.2	40.0	40.2	40.1	63.67	63.87	63.54	64.23	17:45
87.9	90.5	91.6	89.4	88.3	88.6	89.3	90.2	91.1	90.00	88.75	90.18	89.64	0.01	40.2	40.0	40.3	40.2	63.53	63.73	63.41	64.00	17:46
87.8	90.6	91.6	89.2	88.2	88.4	89.2	90.3	91.1	89.99	88.60	90.22	89.60	0.02	40.2	40.0	40.3	40.1	63.52	63.64	63.37	64.01	17:47
87.9	90.6	91.5	89.2	88.3	88.6	89.1	90.3	91.0	90.00	88.69	90.13	89.61	0.03	40.2	39.9	40.2	40.1	63.48	63.58	63.32	63.98	17:48
87.9	90.5	91.4	89.2	88.3	88.6	89.1	90.2	90.9	89.91	88.69	90.07	89.56	0.04	40.2	39.9	40.2	40.1	63.40	63.42	63.15	63.80	17:49
87.8	90.5	91.4	89.1	88.0	88.3	89.0	90.3	91.0	89.91	88.47	90.09	89.49	0.03	40.2	40.0	40.2	40.1	63.28	63.44	63.19	63.90	17:50
87.8	90.4	91.3	89.2	88.2	88.5	89.0	90.2	90.8	89.87	88.62	90.01	89.50	0.03	40.1	39.9	40.2	40.1	63.20	63.42	63.35	63.84	17:51
87.8	90.4	91.3	89.0	88.1	88.4	89.0	90.3	90.8	89.86	88.53	90.01	89.46	0.02	40.3	39.9	40.2	40.1	63.37	63.61	63.22	63.99	17:52
87.8	90.3	91.3	89.2	88.2	88.4	89.0	90.1	90.9	89.79	88.61	89.99	89.46	0.02	40.2	40.0	40.2	40.1	63.22	63.50	63.29	63.85	17:53
87.8	90.4	91.3	89.2	88.2	88.5	89.0	90.1	90.8	89.80	88.61	89.96	89.46	0.00	40.2	39.9	40.3	40.1	63.26	63.45	63.09	63.82	17:54
87.8	90.3	91.2	89.1	88.2	88.4	89.0	90.0	90.8	89.76	88.58	89.93	89.42	-0.01	40.1	39.9	40.2	40.1	63.32	63.52	63.16	63.86	17:55
87.7	90.3	91.3	89.1	88.1	88.3	89.1	90.1	90.9	89.77	88.50	90.02	89.43	-0.02	40.1	40.0	40.2	40.1	63.38	63.47	63.19	63.87	17:56
87.6	90.3	91.3	89.1	88.1	88.3	89.0	90.0	90.9	89.75	88.52	89.97	89.41	-0.03	40.2	39.9	40.2	40.1	63.36	63.48	63.18	63.88	17:57
87.6	90.2	91.3	89.1	88.1	88.3	89.0	90.0	90.8	89.71	88.52	89.93	89.39	-0.04	40.1	39.9	40.2	40.0	63.24	63.34	63.05	63.72	17:58
87.7	90.4	91.3	88.9	87.9	88.2	88.8	90.2	90.8	89.78	88.32	89.95	89.35	-0.06	40.3	40.0	40.2	40.1	63.49	63.72	63.51	64.26	17:59

COMMENTS _____

Tested By Frank A. Deiney Date 6-16-93 Reviewed By C L Rutledge Date 6-17-93

AMPACITY TEST. JOB NUMBER 93-0501. SAMPLE NUMBER 93-0501-08 DATA FILE 3p3c6g08.002 06-16-1993

POSITION 1			POSITION 2			POSITION 3			POSITION AVERAGE			AVG		AMBIENT TEMPERATURE				AMPERES				
Tb	Tw	Tr	Tb	Tw	Tr	Tb	Tw	Tr	T1av	T2av	T3av	Twave	SLOPE	Tam1	Tam2	Tam3	Taav	Ib	Iw	Ir	I'	TIME
87.[illegible]	[illegible].3	91.2	89.1	88.1	88.4	89.0	90.0	90.8	89.73	88.53	89.91	89.39	-0.07	40.2	39.9	40.1	40.1	63.39	63.51	63.58	64.02	18:00
87.7	90.4	91.3	88.9	87.9	88.2	88.9	90.2	90.7	89.80	88.35	89.94	89.36	-0.09	40.2	39.9	40.1	40.1	63.47	63.54	63.44	64.12	18:01
87.7	90.4	91.3	88.9	87.9	88.2	88.9	90.2	90.8	89.78	88.32	89.96	89.35	-0.10	40.1	39.8	40.2	40.0	63.62	63.82	63.89	64.37	18:02
87.6	90.3	91.3	89.1	88.0	88.3	89.1	90.1	90.9	89.75	88.46	90.00	89.41	-0.10	40.2	39.9	40.2	40.1	64.11	64.13	63.99	64.62	18:03
87.7	90.5	91.4	89.0	88.0	88.3	89.0	90.2	90.9	89.86	88.43	90.05	89.45	-0.11	40.2	39.9	40.2	40.1	64.14	64.21	64.09	64.73	18:04
87.9	90.4	91.4	89.2	88.2	88.5	89.0	90.2	90.8	89.90	88.63	89.99	89.51	-0.10	40.1	39.9	40.2	40.1	64.18	64.25	64.09	64.65	18:05
87.8	90.4	91.5	89.2	88.1	88.3	89.1	90.1	91.0	89.92	88.56	90.08	89.52	-0.10	40.1	39.9	40.1	40.0	64.00	64.02	63.86	64.42	18:06
87.8	90.4	91.6	89.3	88.2	88.4	89.2	90.1	91.0	89.94	88.64	90.08	89.55	-0.09	40.1	39.8	40.1	40.0	63.99	64.03	63.80	64.34	18:07
87.8	90.5	91.6	89.2	88.1	88.3	89.1	90.3	91.0	89.97	88.52	90.16	89.55	-0.09	40.1	39.9	40.1	40.0	63.87	63.89	63.67	64.30	18:08
87.8	90.6	91.6	89.2	88.1	88.4	89.1	90.4	91.1	90.00	88.55	90.18	89.58	-0.08	40.0	39.9	40.1	40.0	63.85	63.96	63.95	64.39	18:09
87.9	90.5	91.5	89.3	88.3	88.6	89.2	90.2	91.0	89.96	88.76	90.11	89.61	-0.07	40.1	39.8	40.1	40.0	63.93	64.02	63.83	64.30	18:10
87.9	90.6	91.5	89.1	88.1	88.4	89.1	90.4	90.9	89.99	88.56	90.14	89.56	-0.06	40.1	39.8	40.1	40.0	63.83	63.87	63.67	64.27	18:11
87.8	90.4	91.5	89.3	88.3	88.5	89.2	90.2	91.0	89.92	88.74	90.13	89.59	-0.05	40.1	39.8	40.1	40.0	63.76	63.84	63.60	64.08	18:12
87.9	90.5	91.4	89.2	88.3	88.6	89.0	90.3	90.9	89.95	88.68	90.06	89.56	-0.04	40.1	39.8	40.1	40.0	63.78	63.83	63.62	64.16	18:13
87.9	90.6	91.5	89.2	88.2	88.5	89.0	90.3	90.9	89.99	88.63	90.07	89.56	-0.03	40.0	39.8	40.0	40.0	63.87	63.87	63.68	64.25	18:14
87.9	90.6	91.4	89.1	88.1	88.5	89.0	90.3	90.9	89.97	88.58	90.10	89.55	-0.03	40.1	39.8	40.1	40.0	63.79	63.82	63.58	64.20	18:15
87.9	90.5	91.4	89.1	88.2	88.5	89.0	90.3	90.9	89.93	88.59	90.06	89.53	-0.02	40.1	39.8	40.1	40.0	63.60	63.59	63.66	64.07	18:16
87.8	90.5	91.5	89.2	88.1	88.3	89.2	90.3	91.0	89.90	88.54	90.15	89.53	-0.02	40.0	39.9	40.1	40.0	63.90	63.85	63.72	64.27	18:17
87.9	90.4	91.5	89.3	88.3	88.6	89.1	90.2	91.0	89.94	88.73	90.06	89.58	-0.02	40.0	39.8	40.1	40.0	63.66	63.63	63.76	64.05	18:18
87.8	90.4	91.4	89.3	88.2	88.4	89.2	90.2	91.1	89.87	88.64	90.14	89.55	-0.02	40.1	39.9	40.1	40.0	63.82	63.74	63.61	64.14	18:19
87.9	90.5	91.4	89.2	88.2	88.6	89.1	90.2	90.9	89.95	88.66	90.07	89.56	-0.01	40.1	39.8	40.1	40.0	63.89	63.88	63.68	64.25	18:20
87.9	90.6	91.5	89.1	88.1	88.5	89.2	90.4	90.9	90.00	88.57	90.18	89.58	-0.01	40.2	39.8	40.2	40.0	63.99	63.91	63.80	64.40	18:21
87.8	90.5	91.5	89.2	88.1	88.4	89.2	90.3	91.1	89.91	88.56	90.17	89.55	-0.01	40.2	39.8	40.1	40.0	63.97	63.92	63.76	64.33	18:22
87.9	90.6	91.6	89.1	88.1	88.4	89.1	90.4	91.0	90.01	88.53	90.19	89.58	-0.00	40.0	39.7	40.0	39.9	64.05	63.99	63.86	64.40	18:23
87.8	90.6	91.5	89.2	88.0	88.4	89.2	90.4	91.1	89.98	88.52	90.20	89.57	-0.00	40.1	39.8	40.1	40.0	64.16	64.13	63.93	64.53	18:24
88.0	90.6	91.6	89.2	88.2	88.6	89.2	90.5	91.0	90.07	88.65	90.22	89.65	0.01	40.0	39.8	40.1	40.0	63.78	63.82	63.89	64.25	18:25
87.9	90.5	91.5	89.4	88.3	88.6	89.2	90.2	91.1	89.96	88.76	90.15	89.62	0.02	40.0	39.8	40.1	40.0	64.08	64.03	63.96	64.35	18:26
88.0	90.6	91.6	89.4	88.4	88.7	89.2	90.3	91.0	90.03	88.81	90.18	89.67	0.03	40.0	39.8	40.1	39.9	63.82	63.85	63.92	64.18	18:27
88.0	90.6	91.5	89.2	88.3	88.6	89.1	90.4	91.0	90.01	88.68	90.19	89.63	0.03	40.0	39.8	40.1	40.0	64.01	63.97	63.85	64.35	18:28
88.0	90.6	91.5	89.3	88.3	88.6	89.1	90.4	91.0	90.03	88.70	90.20	89.64	0.04	40.0	39.8	40.0	39.9	63.92	63.95	63.81	64.25	18:29
88.0	90.7	91.5	89.2	88.1	88.5	89.2	90.5	91.1	90.06	88.59	90.23	89.63	0.04	40.1	39.8	40.0	40.0	63.98	64.02	63.82	64.37	18:30
87.9	90.5	91.5	89.4	88.3	88.6	89.3	90.3	91.2	89.98	88.74	90.26	89.66	0.05	40.0	39.8	40.0	39.9	64.03	64.08	63.82	64.28	18:31
87.9	90.5	91.6	89.4	88.3	88.6	89.3	90.3	91.2	89.98	88.78	90.26	89.67	0.06	40.0	39.8	40.1	39.9	64.06	63.99	63.84	64.25	18:32
88.[illegible]	[illegible].7	91.7	89.2	88.2	88.6	89.4	90.6	91.1	90.12	88.67	90.34	89.71	0.07	40.2	39.8	40.1	40.0	64.06	63.99	63.82	64.37	18:33
87.[illegible]	[illegible].5	91.5	89.4	88.4	88.6	89.2	90.2	91.2	89.99	88.79	90.18	89.65	0.08	40.0	39.8	40.1	40.0	63.49	63.53	63.33	63.74	18:34
87.9	90.5	91.6	89.3	88.3	88.7	89.2	90.3	91.1	90.02	88.78	90.20	89.67	0.10	40.1	39.8	40.1	40.0	63.72	63.72	63.30	63.95	18:35
87.9	90.6	91.5	89.3	88.3	88.6	89.1	90.3	91.0	89.99	88.74	90.14	89.62	0.10	40.1	39.8	40.0	40.0	63.41	63.52	63.32	63.80	18:36
87.8	90.4	91.4	89.3	88.4	88.6	89.2	90.2	91.0	89.91	88.76	90.15	89.61	0.11	40.0	39.8	40.1	40.0	63.75	63.76	63.38	63.96	18:37
87.8	90.5	91.5	89.1	88.0	88.3	89.1	90.4	91.0	89.92	88.50	90.18	89.53	0.11	40.1	39.8	40.1	40.0	63.42	63.54	63.40	63.94	18:38
87.8	90.6	91.5	89.1	88.1	88.4	89.1	90.4	91.0	89.96	88.52	90.17	89.55	0.11	40.0	39.8	40.0	40.0	63.45	63.57	63.43	63.94	18:39
87.8	90.4	91.3	89.2	88.2	88.5	89.0	90.2	90.9	89.84	88.63	90.02	89.50	0.11	40.0	39.8	40.1	40.0	63.08	63.17	62.97	63.49	18:40
87.8	90.3	91.2	89.2	88.2	88.4	88.8	90.0	90.8	89.76	88.59	89.90	89.42	0.10	40.1	39.8	40.1	40.0	63.10	63.24	63.03	63.57	18:41
87.6	90.2	91.2	89.1	88.1	88.3	88.9	90.0	90.9	89.67	88.50	89.92	89.37	0.09	40.0	39.8	40.1	40.0	63.19	63.21	63.07	63.61	18:42
87.7	90.3	91.3	89.1	88.1	88.4	88.9	90.0	90.8	89.76	88.57	89.91	89.41	0.09	40.0	39.8	40.0	39.9	63.43	63.47	63.72	63.96	18:43
87.6	90.3	91.3	89.0	87.9	88.2	88.9	90.2	90.9	89.75	88.35	89.98	89.36	0.09	39.9	39.8	40.0	39.9	63.66	63.67	63.66	64.15	18:44
87.7	90.4	91.3	88.9	87.9	88.2	88.9	90.2	90.8	89.77	88.32	89.96	89.35	0.08	40.0	39.7	40.1	39.9	63.54	63.55	63.56	64.09	18:45
87.8	90.4	91.3	89.0	88.0	88.3	88.9	90.1	90.7	89.83	88.44	89.92	89.40	0.07	40.0	39.7	40.0	39.9	63.79	63.81	63.64	64.25	18:46
87.7	90.3	91.3	89.2	88.1	88.3	88.9	90.0	90.9	89.72	88.53	89.93	89.39	0.07	39.9	39.8	40.0	39.9	63.75	63.96	63.60	64.17	18:47
87.7	90.4	91.4	89.0	87.9	88.2	89.0	90.2	90.9	89.84	88.39	90.03	89.42	0.07	40.0	39.8	40.0	39.9	63.83	64.03	63.71	64.34	18:48
87.8	90.5	91.4	89.0	88.0	88.3	88.9	90.3	90.8	89.90	88.45	90.00	89.45	0.06	39.9	39.7	40.0	39.9	63.84	64.04	63.76	64.36	18:49
87.7	90.3	91.3	89.2	88.2	88.4	89.1	90.1	90.9	89.76	88.58	90.01	89.45	0.05	40.0	39.8	40.0	39.9	63.84	64.03	63.74	64.26	18:50
87.8	90.5	91.3	89.0	88.0	88.4	88.9	90.3	90.8	89.88	88.47	90.03	89.46	0.05	40.1	39.7	40.0	40.0	63.75	64.00	63.74	64.33	18:51
87.8	90.5	91.3	89.0	88.0	88.3	89.0	90.3	90.9	89.87	88.42	90.06	89.45	0.04	40.1	39.8	40.0	40.0	63.54	63.91	63.88	64.29	18:52
87.8	90.3	91.3	89.2	88.2	88.4	89.1	90.1	90.8	89.78	88.63	90.02	89.43	0.03	40.0	39.8	40.0	39.9	63.78	64.04	63.87	64.28	18:53
87.8	90.4	91.3	89.2	88.2	88.5	89.1	90.2	90.8	89.82	88.62	90.03	89.49	-0.02	40.0	39.8	40.0	39.9	63.78	64.00	63.86	64.27	18:54
87.7	90.4	91.3	89.3	88.2	88.4	89.0	90.1	91.0	89.81	88.59	90.04	89.48	0.00	40.1	39.8	40.0	40.0	63.88	64.08	63.93	64.35	18:55
87.8	90.6	91.4	89.1	88.0	88.3	89.0	90.3	91.0	89.95	88.49	90.11	89.52	-0.01	39.9	39.8	40.1	39.9	63.90	64.11	63.96	64.44	18:56
87.8	90.6	91.5	89.1	88.0	88.3	89.1	90.3	91.0	89.95	88.48	90.12	89.51	-0.02	40.1	39.8	40.0	40.0	63.85	64.15	63.94	64.44	18:57
87.7	90.4	91.4	89.3	88.2	88.4	89.0	90.1	91.0	89.85	88.60	90.06	89.50	-0.03	40.0	39.8	40.0	39.9	63.84	64.07	63.90	64.29	18:58
87.9	90.6	91.4	89.1	88.1	88.4	89.1	90.3	90.9	89.99	88.57	90.09	89.55	-0.03	40.0	39.8	40.0	39.9	63.90	64.06	63.96	64.40	18:59

COMMENTS _____

Tested By Frank A. Deimey Date 6-17-93 Reviewed By C.L. Rutledge Date 6-17-93

ACITY TEST. JOB NUMBER 93-0501. SAMPLE NUMBER 93-0501-10 DATA FILE 3p3c6g10.001 06-17-1993

POSITION 1			POSITION 2			POSITION 3			POSITION AVERAGE			AVG		AMBIENT TEMPERATURE				AMPERES				
Tb	Tw	Tr	Tb	Tw	Tr	Tb	Tw	Tr	T1av	T2av	T3av	Twave	SLOPE	Tam1	Tam2	Tam3	Taav	Ib	Iw	Ir	I'	TIME
87.0	89.0	89.9	90.9	90.9	86.2	89.0	90.8	91.2	88.64	89.34	90.33	89.44	0.01	40.4	40.2	40.6	40.4	62.58	62.55	62.86	62.45	16:20
86.9	89.0	89.9	90.9	90.9	86.2	89.0	90.8	91.2	88.60	89.32	90.35	89.42	0.02	40.5	40.2	40.6	40.4	62.60	62.56	62.66	62.39	16:21
87.0	89.1	89.8	90.9	90.8	86.2	88.9	90.8	91.2	88.65	89.28	90.31	89.41	0.02	40.6	40.2	40.6	40.5	62.37	62.41	62.72	62.34	16:22
86.9	89.1	89.9	90.7	90.6	86.2	89.2	91.1	91.1	88.66	89.15	90.48	89.43	0.03	40.5	40.3	40.6	40.5	62.63	62.55	62.70	62.57	16:23
87.0	89.1	89.9	90.8	90.9	86.2	88.9	90.8	91.2	88.67	89.25	90.29	89.40	0.03	40.5	40.3	40.7	40.5	62.56	62.56	62.70	62.48	16:24
86.8	89.0	89.9	90.7	90.7	86.2	89.2	91.1	91.1	88.61	89.18	90.49	89.43	0.04	40.6	40.2	40.6	40.5	62.66	62.64	62.70	62.61	16:25
87.0	89.0	89.9	90.9	90.8	86.2	89.0	90.8	91.1	88.64	89.29	90.29	89.41	0.04	40.5	40.2	40.5	40.5	62.66	62.67	62.68	62.51	16:26
86.9	89.1	90.0	90.7	90.7	86.2	89.2	91.1	91.1	88.68	89.18	90.45	89.44	0.05	40.6	40.2	40.6	40.4	62.54	62.52	62.79	62.50	16:27
86.9	89.0	90.1	90.7	90.7	86.1	89.1	90.9	91.2	88.65	89.19	90.39	89.41	0.05	40.5	40.2	40.6	40.4	62.78	62.75	62.80	62.65	16:28
86.9	89.1	89.9	90.7	90.6	86.2	89.1	91.0	91.0	88.63	89.15	90.39	89.39	0.06	40.6	40.3	40.7	40.5	62.43	62.48	62.69	62.49	16:29
87.0	89.2	90.0	90.9	90.6	86.1	89.0	90.8	91.1	88.71	89.21	90.29	89.40	0.06	40.5	40.2	40.6	40.5	62.67	62.68	62.58	62.48	16:30
87.0	89.1	89.9	90.8	90.8	86.1	89.1	90.9	91.0	88.67	89.27	90.32	89.42	0.06	40.5	40.2	40.6	40.4	62.66	62.67	62.58	62.46	16:31
87.0	89.0	90.0	90.7	90.9	86.1	89.0	90.9	91.2	88.65	89.24	90.38	89.43	0.07	40.4	40.2	40.6	40.4	62.71	62.67	62.60	62.51	16:32
86.9	89.1	89.9	90.7	90.6	86.1	89.1	91.0	91.2	88.61	89.13	90.42	89.39	0.07	40.5	40.2	40.6	40.4	62.81	62.79	62.66	62.68	16:33
87.0	89.1	89.8	90.6	90.6	86.2	89.2	91.1	91.0	88.65	89.13	90.41	89.40	0.07	40.5	40.2	40.6	40.4	62.65	62.72	62.58	62.60	16:34
87.0	89.1	89.9	90.8	90.6	86.1	89.0	90.8	91.0	88.68	89.20	90.25	89.37	0.07	40.5	40.2	40.5	40.4	62.68	62.66	62.51	62.43	16:35
87.0	89.0	89.9	90.9	90.9	86.1	89.0	90.8	91.0	88.65	89.30	90.28	89.41	0.07	40.5	40.2	40.6	40.4	62.65	62.67	62.75	62.49	16:36
86.9	89.0	90.0	90.9	90.9	86.1	88.9	90.8	91.1	88.61	89.31	90.28	89.40	0.07	40.6	40.2	40.7	40.5	62.78	62.82	62.68	62.60	16:37
86.8	88.9	89.8	90.9	90.6	86.1	88.9	90.8	91.1	88.54	89.27	90.27	89.36	0.07	40.5	40.3	40.6	40.5	62.60	62.60	62.47	62.39	16:38
86.8	89.1	89.9	90.6	90.6	86.1	89.0	90.9	91.1	88.59	89.11	90.35	89.35	0.07	40.6	40.2	40.5	40.4	62.67	62.64	62.54	62.56	16:39
86.8	89.1	89.8	90.7	90.6	86.1	89.1	90.9	90.9	88.58	89.16	90.32	89.35	0.06	40.5	40.2	40.6	40.5	62.60	62.58	62.52	62.48	16:40
86.9	89.0	89.9	90.9	90.9	86.1	89.0	90.7	91.1	88.59	89.29	90.25	89.38	0.06	40.6	40.3	40.8	40.5	62.67	62.69	62.54	62.51	16:41
86.9	89.0	89.9	90.8	90.8	86.1	88.9	90.7	91.1	88.60	89.27	90.23	89.37	0.06	40.6	40.2	40.6	40.5	62.49	62.53	62.40	62.32	16:42
86.9	89.1	89.9	90.8	90.5	86.1	89.0	90.7	91.0	88.61	89.13	90.24	89.33	0.05	40.5	40.2	40.7	40.5	62.42	62.49	62.60	62.37	16:43
86.8	88.9	89.9	90.8	90.8	86.1	88.8	90.7	91.1	88.54	89.20	90.20	89.31	0.05	40.5	40.2	40.8	40.5	62.57	62.55	62.47	62.43	16:44
86.8	88.9	89.8	90.6	90.8	86.1	89.0	91.0	90.9	88.49	89.16	90.31	89.32	0.04	40.6	40.2	40.6	40.5	62.44	62.47	62.58	62.51	16:45
86.8	88.8	89.7	90.8	90.8	86.1	88.8	90.7	91.0	88.44	89.19	90.17	89.27	0.03	40.6	40.3	40.5	40.5	62.65	62.60	62.51	62.47	16:46
[illegible]	88.9	89.7	90.8	90.8	86.1	88.8	90.7	91.0	88.48	89.22	90.15	89.28	0.02	40.5	40.2	40.6	40.4	62.79	62.71	62.62	62.55	16:47
[illegible]	89.0	89.7	90.8	90.6	86.0	88.8	90.6	91.0	88.56	89.13	90.14	89.28	0.01	40.6	40.2	40.6	40.5	62.64	62.66	62.61	62.52	16:48
86.9	89.0	89.8	90.7	90.7	86.1	89.1	90.9	90.9	88.58	89.12	90.30	89.33	0.00	40.5	40.2	40.6	40.4	62.56	62.55	62.54	62.48	16:49
86.9	89.0	89.8	90.8	90.6	86.0	88.8	90.6	91.0	88.59	89.11	90.15	89.28	-0.00	40.6	40.3	40.6	40.5	62.44	62.43	62.66	62.42	16:50
86.8	89.0	89.9	90.4	90.4	86.0	89.1	90.9	91.0	88.57	88.95	90.31	89.28	-0.01	40.5	40.2	40.6	40.4	62.38	62.34	62.37	62.40	16:51
86.9	89.0	89.8	90.6	90.6	86.0	88.9	90.8	90.9	88.60	89.07	90.23	89.30	-0.02	40.5	40.2	40.6	40.5	62.39	62.38	62.62	62.43	16:52
86.8	89.0	89.9	90.7	90.4	86.0	88.9	90.6	90.9	88.56	89.03	90.13	89.24	-0.03	40.5	40.3	40.6	40.5	62.58	62.52	62.51	62.46	16:53
86.8	89.0	89.9	90.5	90.4	86.0	89.1	90.9	91.0	88.57	88.95	90.30	89.28	-0.04	40.6	40.3	40.6	40.5	62.56	62.54	62.49	62.59	16:54
86.8	88.9	89.9	90.6	90.7	86.0	88.8	90.7	91.0	88.49	89.09	90.15	89.24	-0.06	40.6	40.3	40.7	40.5	62.48	62.44	62.42	62.44	16:55
86.7	88.9	89.8	90.5	90.5	86.0	88.8	90.8	91.0	88.45	88.99	90.19	89.21	-0.07	40.5	40.2	40.7	40.5	62.58	62.54	62.52	62.58	16:56
86.8	88.8	89.6	90.7	90.7	86.0	88.7	90.6	90.8	88.42	89.12	90.04	89.20	-0.09	40.5	40.3	40.7	40.5	62.33	62.32	62.58	62.35	16:57
86.8	89.0	89.7	90.4	90.4	85.9	89.0	90.8	90.9	88.49	88.91	90.23	89.21	-0.10	40.6	40.3	40.7	40.5	62.72	62.63	62.59	62.75	16:58
86.7	88.9	89.8	90.5	90.5	85.9	88.8	90.7	90.9	88.49	88.96	90.16	89.20	-0.11	40.5	40.3	40.7	40.5	62.57	62.51	62.71	62.63	16:59
86.9	89.0	89.8	90.4	90.4	85.9	89.0	90.9	90.9	88.51	88.92	90.25	89.23	-0.13	40.5	40.2	40.7	40.5	62.76	62.70	62.68	62.79	17:00
86.9	89.0	89.8	90.7	90.4	86.0	88.9	90.6	90.9	88.57	89.03	90.13	89.24	-0.14	40.5	40.2	40.7	40.5	62.87	62.80	62.76	62.72	17:01
86.8	88.9	89.8	90.7	90.7	86.0	88.9	90.7	91.0	88.51	89.14	90.18	89.27	-0.14	40.5	40.2	40.6	40.4	62.73	62.66	62.58	62.55	17:02
86.8	88.8	89.7	90.7	90.7	85.9	88.8	90.6	90.9	88.44	89.10	90.12	89.22	-0.15	40.5	40.3	40.7	40.5	62.62	62.61	62.48	62.55	17:03
86.9	89.0	89.7	90.6	90.6	86.0	89.0	90.9	90.8	88.51	89.04	90.25	89.26	-0.16	40.6	40.3	40.8	40.5	62.78	62.78	62.70	62.79	17:04
86.8	88.9	89.8	90.7	90.6	86.0	88.9	90.7	91.0	88.50	89.07	90.21	89.26	-0.17	40.5	40.2	40.8	40.5	63.06	62.97	62.71	62.88	17:05
86.8	88.9	89.8	90.6	90.6	86.0	89.1	90.9	90.9	88.49	89.07	90.30	89.29	-0.17	40.6	40.3	40.6	40.5	62.76	62.73	62.69	62.73	17:06
86.9	89.0	89.8	90.6	90.6	86.0	89.0	90.9	90.9	88.58	89.05	90.26	89.30	-0.17	40.5	40.2	40.7	40.5	62.95	62.88	62.68	62.81	17:07
87.0	89.0	89.8	90.8	90.8	86.0	88.9	90.8	90.9	88.62	89.18	90.21	89.34	-0.17	40.5	40.3	40.7	40.5	63.14	63.10	62.83	62.90	17:08
87.0	89.1	89.9	90.6	90.6	86.0	89.2	91.0	90.9	88.66	89.07	90.36	89.36	-0.16	40.6	40.2	40.8	40.5	63.01	63.04	62.79	62.93	17:09
86.8	89.1	89.9	90.6	90.6	86.0	89.1	91.0	91.0	88.59	89.06	90.37	89.34	-0.16	40.5	40.2	40.6	40.4	63.00	62.98	62.80	62.88	17:10
86.8	88.9	89.8	90.6	90.8	86.1	89.1	91.0	91.1	88.54	89.15	90.40	89.36	-0.16	40.6	40.2	40.5	40.5	63.05	63.03	62.79	62.92	17:11
86.9	89.0	89.8	90.9	90.9	86.1	88.9	90.7	91.1	88.56	89.29	90.22	89.36	-0.15	40.6	40.3	40.6	40.5	62.93	63.05	62.83	62.78	17:12
86.9	89.0	89.8	90.9	90.9	86.1	88.9	90.8	91.0	88.58	89.27	90.22	89.36	-0.15	40.5	40.2	40.7	40.5	62.61	62.81	62.80	62.59	17:13
87.0	89.0	89.8	90.9	90.9	86.1	89.0	90.8	91.0	88.61	89.29	90.25	89.38	-0.14	40.6	40.2	40.8	40.5	62.75	62.97	62.72	62.68	17:14
86.8	89.1	90.0	90.6	90.6	86.1	89.1	91.0	91.1	88.63	89.10	90.39	89.37	-0.14	40.5	40.3	40.7	40.5	62.68	62.68	62.72	62.68	17:15
86.9	89.1	89.8	90.7	90.6	86.1	89.0	91.0	91.0	88.63	89.12	90.32	89.36	-0.13	40.7	40.3	40.8	40.6	62.52	62.53	62.60	62.57	17:16
86.8	89.1	89.9	90.6	90.6	86.1	89.1	91.0	91.1	88.62	89.07	90.42	89.37	-0.13	40.5	40.3	40.7	40.5	62.59	62.61	62.68	62.63	17:17
86.9	88.9	89.8	90.8	90.8	86.1	88.8	90.7	91.1	88.53	89.24	90.20	89.33	-0.13	40.6	40.2	40.8	40.6	62.60	62.55	62.64	62.53	17:18
87.0	89.1	89.8	90.7	90.7	86.1	89.0	90.9	91.0	88.62	89.16	90.30	89.36	-0.13	40.6	40.3	40.8	40.5	62.66	62.64	62.73	62.67	17:19

MMENTS

Date 6-17-93 Reviewed By C. L. Rutledge Date 6-18-93

AMPACITY TEST. JOB NUMBER 93-0501. SAMPLE NUMBER 93-0501-10 DATA FILE 3p3c6g10.001 06-17-1993

POSITION 1			POSITION 2			POSITION 3			POSITION AVERAGE			AVG		AMBIENT TEMPERATURE				AMPERES				
Tb	Tw	Tr	Tb	Tw	Tr	Tb	Tw	Tr	T1av	T2av	T3av	Twave	SLOPE	Tam1	Tam2	Tam3	Taav	Ib	Iw	Ir	I'	TIME
86.8	89.0	90.0	90.6	90.5	86.1	88.9	90.9	91.1	88.60	89.06	90.31	89.32	-0.12	40.5	40.2	40.7	40.5	62.20	62.23	62.50	62.29	17:20
86.8	88.9	89.8	90.7	90.7	86.1	88.9	90.7	91.1	88.48	89.17	90.25	89.30	-0.11	40.6	40.2	40.7	40.5	62.72	62.68	62.78	62.66	17:21
86.8	88.9	89.8	90.6	90.6	86.1	89.1	90.9	91.1	88.49	89.12	90.37	89.33	-0.10	40.5	40.3	40.7	40.5	62.54	62.52	62.86	62.63	17:22
86.6	89.0	89.9	90.6	90.6	86.1	88.9	90.9	91.1	88.57	89.07	90.31	89.32	-0.09	40.5	40.2	40.8	40.5	62.70	62.61	62.74	62.68	17:23
86.9	88.9	89.8	90.8	90.8	85.1	88.8	90.7	91.0	88.55	89.25	90.19	89.33	-0.09	40.5	40.3	40.7	40.5	62.72	62.59	62.76	62.56	17:24
86.8	89.0	89.9	90.6	90.5	86.1	89.1	91.0	91.1	88.58	89.05	90.38	89.34	-0.07	40.7	40.3	40.6	40.5	62.72	62.55	62.74	62.70	17:25
86.9	89.0	89.8	90.6	90.6	86.1	89.1	90.9	91.0	88.58	89.11	90.35	89.35	-0.06	40.5	40.3	40.8	40.5	62.70	62.51	62.78	62.65	17:26
86.9	88.9	89.9	90.8	90.8	86.1	88.9	90.7	91.1	88.58	89.26	90.24	89.36	-0.05	40.5	40.2	40.7	40.5	62.73	62.53	62.74	62.51	17:27
86.8	88.9	89.8	90.7	90.6	86.1	89.0	90.8	91.1	88.51	89.14	90.29	89.31	-0.04	40.6	40.3	40.7	40.5	62.73	62.53	62.74	62.62	17:28
87.0	89.1	89.8	90.7	90.7	86.1	89.0	90.9	91.0	88.62	89.16	90.31	89.36	-0.03	40.6	40.3	40.7	40.5	62.74	62.59	63.02	62.76	17:29
86.9	89.0	90.0	90.6	90.6	86.1	89.0	90.9	91.2	88.63	89.09	90.35	89.36	-0.02	40.5	40.2	40.8	40.5	62.82	62.56	62.85	62.74	17:30
86.9	89.1	89.9	90.6	90.5	86.1	89.2	90.9	91.1	88.64	89.07	90.41	89.37	-0.00	40.4	40.2	40.8	40.5	62.91	62.68	62.77	62.76	17:31
87.0	89.1	89.9	90.8	90.7	86.1	89.1	90.9	91.0	88.66	89.21	90.35	89.41	0.02	40.5	40.3	40.7	40.5	62.96	62.67	62.78	62.70	17:32
87.0	89.2	90.0	90.6	90.5	86.1	89.2	91.0	91.1	88.71	89.08	90.43	89.41	0.03	40.6	40.3	40.7	40.5	62.74	62.76	62.60	62.70	17:33
86.8	89.0	90.0	90.8	90.8	86.1	88.9	90.7	91.2	88.60	89.21	90.26	89.36	0.04	40.6	40.4	40.7	40.5	62.58	62.64	62.45	62.48	17:34
86.9	89.0	89.9	90.8	90.8	86.1	89.0	90.8	91.1	88.58	89.25	90.31	89.38	0.06	40.5	40.3	40.7	40.5	62.67	62.74	62.57	62.55	17:35
86.8	88.9	89.8	90.7	90.8	86.1	88.9	90.6	91.1	88.49	89.20	90.27	89.32	0.07	40.7	40.3	40.7	40.6	62.18	62.36	62.38	62.27	17:36
86.9	89.1	89.8	90.5	90.5	86.1	89.1	91.0	91.0	88.59	89.05	90.35	89.33	0.07	40.6	40.3	40.8	40.6	62.35	62.50	62.30	62.46	17:37
86.8	88.9	89.8	90.6	90.6	86.1	88.9	90.7	91.0	88.52	89.22	90.23	89.32	0.08	40.5	40.3	40.7	40.5	62.32	62.48	62.29	62.26	17:38
86.8	88.9	89.7	90.7	90.7	86.0	88.8	90.7	90.9	88.46	89.16	90.13	89.25	0.08	40.6	40.3	40.6	40.5	62.10	62.34	62.11	62.11	17:39
86.7	88.8	89.7	90.7	90.7	86.0	88.9	90.7	91.0	88.43	89.14	90.17	89.24	0.07	40.6	40.3	40.7	40.5	62.23	62.46	62.23	62.28	17:40
86.7	88.8	89.7	90.7	90.7	86.0	88.7	90.6	91.0	88.41	89.13	90.10	89.21	0.07	40.6	40.3	40.7	40.6	62.38	62.59	62.40	62.45	17:41
86.8	88.9	89.7	90.6	90.6	86.0	88.8	90.7	90.8	88.46	89.07	90.12	89.22	0.07	40.7	40.3	40.6	40.5	62.29	62.48	62.34	62.36	17:42
86.8	88.9	89.7	90.7	90.7	86.0	88.8	90.6	90.9	88.46	89.14	90.13	89.24	0.06	40.7	40.3	40.7	40.6	62.24	62.48	62.47	62.38	17:43
86.6	88.9	89.8	90.5	90.5	85.9	89.0	90.8	91.0	88.45	88.96	90.25	89.22	0.06	40.7	40.3	40.7	40.6	62.34	62.50	62.32	62.49	17:44
86.8	88.9	89.7	90.7	90.7	86.0	88.9	90.7	90.9	88.49	89.12	90.13	89.24	0.05	40.6	40.3	40.8	40.6	62.50	62.62	62.44	62.53	17:45
86.8	88.9	89.8	90.6	90.6	86.0	88.9	90.6	90.8	88.52	89.07	90.18	89.25	0.04	40.6	40.3	40.6	40.5	62.44	62.56	62.36	62.45	17:46
86.7	88.8	89.8	90.6	90.6	85.9	88.8	90.6	91.0	88.44	89.03	90.14	89.20	0.03	40.6	40.3	40.7	40.5	62.19	62.34	62.17	62.26	17:47
86.7	88.8	89.7	90.6	90.7	85.9	88.7	90.6	90.9	88.38	89.06	90.05	89.17	0.02	40.4	40.3	40.8	40.5	62.69	62.80	62.49	62.65	17:48
[illegible]	88.9	89.7	90.4	90.4	85.9	89.1	90.9	90.9	88.45	88.92	90.29	89.22	0.01	40.6	40.3	40.8	40.5	62.72	62.82	62.51	62.82	17:49
[illegible]	88.8	89.7	90.6	90.6	85.9	88.8	90.6	90.9	88.41	89.06	90.09	89.19	0.00	40.6	40.3	40.7	40.5	62.60	62.77	62.62	62.66	17:50
86.8	89.0	89.8	90.5	90.5	86.0	89.0	91.0	90.9	88.52	88.97	90.20	89.26	-0.00	40.6	40.3	40.7	40.5	62.76	62.93	62.49	62.82	17:51
86.9	88.9	89.6	90.6	90.7	85.9	88.8	90.7	90.8	88.48	89.07	90.11	89.22	-0.01	40.6	40.3	40.7	40.5	62.50	62.71	62.62	62.61	17:52
86.7	89.0	89.8	90.5	90.5	85.9	88.9	90.8	91.0	88.49	88.98	90.25	89.24	-0.02	40.6	40.3	40.8	40.6	62.81	62.90	62.60	62.85	17:53
86.7	88.9	89.7	90.5	90.5	86.0	88.9	90.9	91.0	88.44	89.01	90.28	89.24	-0.03	40.5	40.3	40.7	40.5	62.91	62.97	62.67	62.88	17:54
86.9	89.0	89.6	90.6	90.6	86.0	89.0	90.9	90.8	88.49	89.06	90.22	89.26	-0.04	40.5	40.3	40.8	40.5	62.81	62.90	62.58	62.79	17:55
86.9	89.0	89.7	90.7	90.7	86.0	89.0	90.8	90.9	88.55	89.14	90.23	89.31	-0.05	40.6	40.3	40.7	40.5	62.74	62.88	62.54	62.67	17:56
86.9	89.1	89.8	90.6	90.6	86.0	89.1	91.0	90.9	88.62	89.05	90.34	89.34	-0.05	40.5	40.3	40.7	40.5	62.52	62.67	62.67	62.61	17:57
86.8	88.9	89.8	90.8	90.8	86.0	88.9	90.7	91.0	88.50	89.18	90.22	89.30	-0.06	40.7	40.4	40.7	40.6	62.75	62.89	62.64	62.73	17:58
86.8	89.0	89.8	90.5	90.5	86.0	89.1	90.9	91.1	88.51	89.01	90.36	89.29	-0.07	40.6	40.3	40.8	40.6	62.72	62.89	62.86	62.90	17:59
87.0	89.1	89.8	90.7	90.7	86.0	89.0	90.9	90.9	88.62	89.14	90.28	89.35	-0.07	40.6	40.3	40.7	40.5	62.70	62.82	62.56	62.67	18:00
86.8	89.0	89.9	90.6	90.6	86.0	88.9	90.9	91.1	88.57	89.06	90.29	89.31	-0.08	40.6	40.3	40.7	40.5	62.53	62.64	62.45	62.57	18:01
86.9	89.1	89.8	90.6	90.6	86.1	89.1	91.0	91.0	88.60	89.07	90.38	89.35	-0.08	40.6	40.3	40.7	40.6	62.81	62.93	62.70	62.86	18:02
86.9	89.1	89.8	90.6	90.6	86.1	89.0	91.0	91.0	88.61	89.08	90.31	89.33	-0.08	40.6	40.3	40.7	40.5	62.79	62.92	62.63	62.81	18:03
86.9	88.9	89.9	90.8	90.8	86.0	88.9	90.8	91.0	88.57	89.22	90.21	89.33	-0.09	40.6	40.3	40.7	40.5	62.84	62.96	62.76	62.76	18:04
86.9	89.1	89.8	90.7	90.6	86.0	89.2	91.0	91.0	88.61	89.10	90.38	89.36	-0.09	40.8	40.3	40.8	40.6	62.90	63.02	62.83	62.97	18:05
86.8	89.0	89.9	90.7	90.7	86.0	89.2	90.9	91.1	88.55	89.12	90.41	89.36	-0.08	40.6	40.3	40.7	40.5	62.70	62.88	62.93	62.81	18:06
86.9	89.0	89.8	90.8	90.9	86.1	89.0	90.8	91.1	88.57	89.26	90.30	89.37	-0.08	40.6	40.2	40.7	40.5	62.86	62.98	62.82	62.75	18:07
86.9	89.0	89.8	90.8	90.9	86.1	88.9	90.8	91.1	88.56	89.26	90.25	89.36	-0.07	40.6	40.3	40.7	40.5	62.79	62.92	62.76	62.71	18:08
86.9	89.0	89.8	90.8	90.8	86.1	89.0	90.8	91.0	88.58	89.24	90.28	89.37	-0.06	40.8	40.3	40.7	40.6	62.89	62.96	62.82	62.81	18:09
87.0	89.1	89.8	90.8	90.8	86.1	89.2	90.9	91.0	88.60	89.27	90.36	89.42	-0.05	40.6	40.4	40.7	40.6	62.86	62.90	62.73	62.73	18:10
87.0	89.0	89.9	90.9	90.9	86.1	89.0	90.8	91.1	88.62	89.31	90.33	89.42	-0.03	40.6	40.3	40.6	40.5	62.92	62.90	62.76	62.68	18:11
86.9	89.2	90.0	90.7	90.6	86.1	89.3	91.2	91.1	88.71	89.12	90.52	89.45	-0.02	40.6	40.3	40.6	40.5	62.91	62.93	62.77	62.84	18:12
86.9	89.0	89.9	90.9	90.9	86.1	88.9	90.8	91.2	88.64	89.29	90.32	89.42	-0.00	40.7	40.3	40.8	40.6	62.69	62.83	62.84	62.70	18:13
87.0	89.1	89.9	90.9	90.9	86.1	89.0	90.9	91.1	88.65	89.30	90.33	89.43	0.02	40.6	40.3	40.8	40.6	63.00	63.00	62.85	62.82	18:14
87.0	89.2	89.9	90.7	90.7	86.1	89.3	91.1	91.1	88.72	89.16	90.51	89.47	0.04	40.6	40.3	40.8	40.6	63.01	63.06	62.88	62.97	18:15
86.9	89.0	89.9	90.8	90.8	86.1	89.0	90.8	91.2	88.62	89.27	90.33	89.41	0.05	40.6	40.3	40.8	40.6	62.46	62.57	62.35	62.38	18:16
86.9	89.1	90.0	90.8	90.7	86.1	89.0	90.9	91.2	88.64	89.20	90.35	89.39	0.06	40.5	40.3	40.8	40.5	62.56	62.61	62.38	62.46	18:17
86.8	89.1	89.9	90.6	90.6	86.1	89.2	91.0	91.2	88.61	89.13	90.43	89.39	0.07	40.6	40.3	40.8	40.5	62.32	62.23	62.08	62.22	18:18
87.0	89.1	89.8	90.8	90.8	86.1	89.1	90.9	91.0	88.60	89.20	90.35	89.39	0.08	40.5	40.4	40.6	40.5	62.00	62.16	62.02	61.98	18:19

COMMENTS _____

Tested By Frank A. Deiney Date 6-17-93 Reviewed By C. L. Rutledge Date 6-18-93

AMPACITY TEST. JOB NUMBER 93-0501. SAMPLE NUMBER 93-0501-10 DATA FILE 3p3c6g10.001 06-17-1993

POSITION 1			POSITION 2			POSITION 3			POSITION AVERAGE			AVG		AMBIENT TEMPERATURE				AMPERES				
Tb	Tw	Tr	Tb	Tw	Tr	Tb	Tw	Tr	T1av	T2av	T3av	Twave	SLOPE	Tam1	Tam2	Tam3	Taav	Ib	Iw	Ir	I'	TIME
87.0	89.1	89.8	90.8	90.8	86.1	89.1	90.9	91.0	88.62	89.20	90.35	89.39	0.08	40.7	40.4	40.7	40.6	62.17	62.40	62.46	62.30	18:20
86.8	89.0	89.9	90.7	90.7	86.0	89.0	90.8	91.1	88.56	89.14	90.29	89.33	0.08	40.6	40.3	40.7	40.5	62.16	62.50	62.31	62.30	18:21
86.9	89.0	89.7	90.7	90.7	86.1	89.9	90.9	90.9	88.55	89.16	90.23	89.31	0.08	40.7	40.4	40.8	40.6	62.19	62.46	62.48	62.40	18:22
86.8	89.0	89.8	90.5	90.5	86.0	89.0	91.0	91.0	88.54	88.99	90.33	89.29	0.08	40.6	40.3	40.7	40.6	62.20	62.46	62.22	62.40	18:23
86.8	89.0	89.8	90.5	90.5	86.0	89.1	90.8	91.0	88.50	89.01	90.31	89.26	0.07	40.5	40.3	40.8	40.5	62.38	62.66	62.32	62.52	18:24
86.8	88.9	89.7	90.7	90.8	86.0	88.8	90.7	90.9	88.46	89.19	90.18	89.28	0.07	40.5	40.3	40.8	40.5	62.37	62.67	62.34	62.41	18:25
86.8	88.9	89.7	90.7	90.8	86.0	88.8	90.8	90.9	88.47	89.16	90.17	89.27	0.07	40.6	40.3	40.8	40.6	62.33	62.61	62.34	62.39	18:26
86.8	88.9	89.7	90.6	90.7	86.0	88.8	90.8	90.9	88.48	89.10	90.14	89.24	0.06	40.6	40.3	40.8	40.6	62.16	62.53	62.42	62.39	18:27
86.8	89.0	89.7	90.6	90.7	86.0	88.9	90.8	90.9	88.50	89.05	90.18	89.25	0.06	40.5	40.3	40.8	40.5	62.34	62.56	62.36	62.46	18:28
86.9	89.0	89.7	90.6	90.7	86.0	89.0	90.9	90.9	88.53	89.09	90.26	89.29	0.06	40.5	40.3	40.7	40.5	62.06	62.44	62.33	62.27	18:29
86.7	88.9	89.8	90.6	90.7	85.9	88.9	90.7	91.0	88.45	89.09	90.20	89.25	0.06	40.7	40.3	40.7	40.6	62.50	62.65	62.37	62.54	18:30
86.8	89.0	89.7	90.6	90.6	86.0	88.8	90.8	90.8	88.49	89.05	90.17	89.24	0.05	40.5	40.3	40.8	40.5	62.36	62.51	62.25	62.41	18:31
86.7	88.9	89.8	90.5	90.5	85.9	89.0	90.8	91.0	88.45	88.99	90.28	89.24	0.06	40.5	40.3	40.7	40.5	62.54	62.74	62.40	62.62	18:32
86.9	89.0	89.7	90.6	90.7	86.0	88.8	90.8	90.8	88.50	89.09	90.15	89.25	0.06	40.6	40.3	40.8	40.6	62.43	62.66	62.30	62.48	18:33
86.7	88.9	89.7	90.5	90.5	85.9	88.8	90.8	91.0	88.44	88.98	90.20	89.21	0.06	40.7	40.3	40.9	40.6	62.32	62.54	62.27	62.51	18:34
86.8	89.0	89.6	90.4	90.5	86.0	89.1	91.0	90.8	88.46	88.95	90.30	89.24	0.06	40.7	40.3	40.8	40.6	62.38	62.56	62.28	62.56	18:35
86.7	88.9	89.7	90.5	90.5	85.9	88.8	90.7	91.0	88.42	88.98	90.17	89.19	0.05	40.5	40.3	40.7	40.5	62.20	62.43	62.31	62.37	18:36
86.7	88.8	89.6	90.7	90.7	86.0	88.8	90.7	90.9	88.38	89.10	90.12	89.19	0.04	40.5	40.3	40.8	40.5	62.34	62.54	62.25	62.37	18:37
86.8	89.0	89.7	90.4	90.4	85.9	89.0	91.0	90.9	88.47	88.88	90.28	89.21	0.03	40.6	40.2	40.8	40.5	62.46	62.60	62.34	62.61	18:38
86.7	88.9	89.7	90.3	90.4	85.9	89.1	90.9	90.9	88.44	88.89	90.31	89.21	0.02	40.5	40.3	40.9	40.6	62.44	62.64	62.28	62.62	18:39
86.7	88.9	89.6	90.6	90.7	85.9	88.8	90.6	91.0	88.37	89.06	90.12	89.18	0.01	40.6	40.3	40.7	40.5	62.52	62.76	62.53	62.63	18:40
86.7	88.8	89.6	90.6	90.7	85.9	88.7	90.6	91.0	88.38	89.07	90.11	89.19	-0.01	40.6	40.3	40.6	40.5	62.42	62.70	62.46	62.52	18:41
86.8	88.9	89.6	90.6	90.6	85.9	88.8	90.6	90.8	88.47	89.05	90.16	89.23	-0.03	40.7	40.3	40.9	40.6	62.48	62.71	62.53	62.63	18:42
86.8	88.8	89.7	90.7	90.7	85.9	88.8	90.7	91.0	88.42	89.12	90.14	89.23	-0.04	40.6	40.3	40.8	40.6	62.48	62.57	62.72	62.57	18:43
86.8	89.0	89.8	90.4	90.4	85.9	89.0	91.0	91.0	88.52	88.93	90.34	89.26	-0.05	40.5	40.3	40.7	40.5	62.58	62.65	62.56	62.68	18:44
86.8	89.0	89.7	90.4	90.4	85.9	89.1	91.0	91.0	88.52	88.93	90.36	89.27	-0.06	40.7	40.4	40.7	40.6	62.82	62.87	62.76	62.96	18:45
86.8	88.9	89.8	90.6	90.7	85.9	89.0	90.7	91.0	88.46	89.08	90.26	89.26	-0.06	40.6	40.3	40.7	40.5	62.82	62.86	62.72	62.81	18:46
86.8	88.9	89.7	90.7	90.7	86.0	89.0	90.7	91.1	88.44	89.12	90.26	89.27	-0.07	40.5	40.3	40.8	40.5	62.76	62.82	62.62	62.71	18:47
86.8	89.0	89.7	90.5	90.5	86.0	89.2	91.0	91.0	88.53	88.97	90.41	89.30	-0.09	40.5	40.3	40.7	40.5	62.80	62.80	62.68	62.84	18:48
86.8	88.9	89.8	90.7	90.7	86.0	89.1	90.8	91.1	88.48	89.13	90.31	89.31	-0.09	40.7	40.3	40.8	40.6	62.85	62.88	62.72	62.81	18:49
86.8	88.9	89.7	90.7	90.7	86.0	89.1	90.9	91.0	88.51	89.15	90.35	89.33	-0.10	40.6	40.3	40.8	40.6	62.72	62.79	62.79	62.74	18:50
[illegible]	88.9	89.8	90.8	90.8	86.0	89.0	90.8	91.1	88.54	89.19	90.31	89.35	-0.10	40.7	40.4	40.8	40.6	62.86	62.87	62.70	62.77	18:51
87.0	89.1	89.7	90.6	90.6	86.0	89.2	91.0	91.0	88.56	89.07	90.40	89.35	-0.10	40.6	40.3	40.6	40.6	62.70	62.80	62.66	62.81	18:52
86.8	89.0	89.9	90.6	90.6	86.0	89.1	91.0	91.2	88.58	89.08	90.41	89.35	-0.11	40.6	40.3	40.7	40.5	62.94	62.99	62.88	62.94	18:53
86.8	89.0	89.8	90.6	90.6	86.0	89.1	91.0	91.2	88.56	89.07	90.45	89.36	-0.11	40.5	40.3	40.7	40.5	63.04	63.06	62.96	63.02	18:54
87.0	89.1	89.8	90.7	90.7	86.1	89.0	91.0	91.1	88.61	89.13	90.37	89.37	-0.11	40.6	40.3	40.7	40.5	63.00	63.01	62.92	62.97	18:55
87.0	89.2	89.9	90.7	90.6	86.1	89.1	91.1	91.1	88.70	89.12	90.43	89.42	-0.10	40.5	40.3	40.7	40.5	62.95	62.95	62.84	62.88	18:56
86.9	89.1	90.0	90.8	90.7	86.1	89.1	90.9	91.3	88.65	89.18	90.42	89.42	-0.08	40.6	40.3	40.7	40.5	62.92	62.87	62.80	62.81	18:57
86.9	89.1	89.9	90.6	90.6	86.1	89.2	91.0	91.2	88.64	89.06	90.48	89.40	-0.08	40.6	40.3	40.8	40.5	62.38	62.46	62.29	62.42	18:58
86.8	89.1	89.9	90.5	90.5	86.1	89.2	91.0	91.2	88.62	89.03	90.47	89.38	-0.07	40.7	40.3	40.8	40.6	62.22	62.34	62.38	62.41	18:59
86.8	89.1	89.9	90.5	90.5	86.0	89.2	91.0	91.1	88.62	89.01	90.43	89.35	-0.07	40.6	40.3	40.8	40.6	62.43	62.56	62.36	62.55	19:00
86.8	89.1	89.9	90.5	90.5	86.0	89.2	91.0	91.1	88.62	89.00	90.44	89.35	-0.06	40.7	40.3	40.8	40.6	62.46	62.61	62.42	62.62	19:01
86.8	88.9	89.9	90.7	90.8	86.1	89.0	90.8	91.1	88.56	89.19	90.31	89.35	-0.05	40.7	40.3	40.7	40.6	62.30	62.54	62.28	62.35	19:02
86.7	88.9	89.8	90.6	90.7	86.0	89.1	90.8	91.1	88.45	89.09	90.36	89.30	-0.06	40.6	40.4	40.7	40.6	62.38	62.62	62.40	62.50	19:03
86.7	88.9	89.7	90.5	90.6	86.0	88.9	90.8	91.1	88.44	89.03	90.30	89.25	-0.06	40.6	40.3	40.8	40.6	62.25	62.42	62.16	62.34	19:04
86.9	89.0	89.6	90.5	90.5	86.0	89.1	91.0	90.9	88.48	89.01	90.34	89.28	-0.06	40.6	40.3	40.7	40.6	62.16	62.34	62.06	62.27	19:05
86.7	88.8	89.7	90.6	90.6	85.9	88.8	90.7	91.1	88.42	89.03	90.20	89.22	-0.07	40.7	40.3	40.8	40.6	62.17	62.44	62.40	62.40	19:06
86.7	89.0	89.7	90.3	90.4	85.9	89.1	90.9	91.0	88.45	88.89	90.33	89.23	-0.07	40.6	40.3	40.7	40.6	62.35	62.53	62.20	62.52	19:07
86.7	88.8	89.7	90.6	90.6	85.9	88.8	90.7	91.0	88.41	89.04	90.14	89.20	-0.08	40.6	40.3	40.7	40.5	62.36	62.60	62.22	62.42	19:08
86.7	88.9	89.7	90.4	90.4	85.9	88.9	90.9	91.0	88.41	88.89	90.26	89.19	-0.08	40.7	40.3	40.8	40.6	62.31	62.42	62.12	62.46	19:09
86.8	88.9	89.6	90.4	90.4	85.9	88.9	90.9	90.9	88.44	88.89	90.23	89.19	-0.08	40.5	40.3	40.8	40.6	62.41	62.58	62.39	62.62	19:10
86.8	89.0	89.7	90.4	90.4	85.9	88.9	90.9	90.9	88.50	88.90	90.22	89.21	-0.08	40.5	40.3	40.8	40.5	62.52	62.69	62.52	62.71	19:11
86.8	88.9	89.7	90.6	90.6	85.9	89.0	90.8	90.9	88.48	89.07	90.22	89.25	-0.07	40.6	40.3	40.7	40.5	62.50	62.76	62.52	62.59	19:12
86.7	88.8	89.9	90.6	90.6	85.9	89.0	90.7	91.1	88.47	89.02	90.26	89.25	-0.06	40.6	40.3	40.8	40.6	62.32	62.66	62.62	62.59	19:13
86.7	88.9	89.7	90.3	90.4	85.9	89.0	90.9	91.0	88.44	88.86	90.31	89.20	-0.05	40.7	40.3	40.7	40.6	62.51	62.80	62.58	62.82	19:14
86.7	88.9	89.8	90.6	90.7	85.9	89.0	90.8	91.1	88.45	89.07	90.27	89.27	-0.04	40.5	40.3	40.8	40.5	62.60	62.88	62.69	62.74	19:15
86.8	89.0	89.7	90.5	90.6	85.9	88.8	90.9	90.9	88.46	89.00	90.19	89.23	-0.03	40.6	40.3	40.8	40.6	62.66	62.86	62.67	62.82	19:16
86.8	88.9	89.7	90.7	90.7	85.9	88.8	90.7	91.0	88.47	89.13	90.18	89.26	-0.02	40.6	40.3	40.6	40.5	62.60	62.90	62.67	62.66	19:17
86.7	89.0	89.6	90.4	90.5	85.9	89.0	90.9	91.1	88.52	88.95	90.33	89.27	-0.01	40.7	40.3	40.6	40.5	62.44	62.75	62.52	62.66	19:18
86.7	88.9	89.7	90.4	90.5	85.9	89.1	90.8	91.1	88.44	88.96	90.32	89.24	-0.00	40.7	40.4	40.8	40.6	62.47	62.67	62.53	62.73	19:19

COMMENTS

Tested By Frank A. Denney Date 6-17-93 Reviewed By C. L. Rutledge Date 6-18-93

ATTACHMENT I

SUMMARY OF PHASE ANGLES AND CONDUIT TEMPERATURES

PHASE ANGLES, VOLTAGE AND CURRENTS

THREE PHASE CIRCUITS

3 CONDUCTOR, 6AWG CABLE IN 1 INCH CONDUIT

TEST FILE NAME	WIRE	PHASE ANGLE	VOLTAGE	CURRENT
93-0501-05	RED	7.7	2.256	64.46
	WHITE	8.2	2.097	64.31
	BLACK	8.3	2.185	64.53
93-0501-06	RED	7.4	2.203	63.58
	WHITE	8.2	2.073	63.78
	BLACK	8.7	2.147	63.30
93-0501-10	RED	7.7	2.189	62.59
	WHITE	7.9	2.037	62.76
	BLACK	8.4	2.130	62.66

8, 3 CONDUCTOR, 6AWG CABLE IN 4 INCH CONDUIT

TEST FILE NAME	WIRE	PHASE ANGLE	VOLTAGE	CURRENT
93-0501-01	RED	10.1	4.032	33.60
	WHITE	6.2	4.314	33.68
	BLACK	8.4	3.733	33.60
93-0501-03	RED	10.1	3.79	31.73
	WHITE	5.9	4.05	31.60
	BLACK	8.4	3.50	31.78
93-0501-02	RED	9.6	4.01	33.34
	WHITE	5.7	4.29	33.43
	BLACK	7.8	3.74	33.36
93-0501-04	RED	11.9	3.849	32.42
	WHITE	6.9	4.169	32.17
	BLACK	10.0	3.465	32.21
93-0501-09	RED	8.4	3.606	33.00
	WHITE	10.4	3.907	33.00
	BLACK	7.0	4.339	33.00

SINGLE PHASE CIRCUITS

4 CONDUCTOR, 750Kcmil CABLE IN 4 INCH CONDUIT

TEST FILE NAME	WIRE	PHASE ANGLE	VOLTAGE	CURRENT
93-0501-01		56	3.06	452.0
93-0501-02		60	4.213	600.0
93-0501-04		50	3.02	421.0

4 CONDUCTOR, 6AWG CABLE IN 1 INCH CONDUIT

TEST FILE NAME	WIRE	PHASE ANGLE	VOLTAGE	CURRENT
93-0501-08		8.0	3.14	62.0
IN AIR		8.0 - 10.0	4.58	100.0

3 CONDUCTOR, 6AWG CABLE IN 1 INCH CONDUIT

TEST FILE NAME	WIRE	PHASE ANGLE	VOLTAGE	CURRENT
93-0501-05		20.0	6.418	100.0
93-0501-06		21.0	6.432	100.0
93-0501-07		24.0	6.463	100.0
NO IDENT		24.0	6.39	100.0
IN AIR		20.0	2.99	100.0

SURFACE TEMPERATURES
1" CONDUIT

BARE 1 INCH CONDUIT

FILE NAME	CH43	CH44	Taav
4C6G08NO.RED	59.88	59.64	40.77
3P3C6G10.RED	53.45	*****	40.63

1 INCH CONDUIT WITH 1/2 INCH THERMOLAG

FILE NAME	CH43	CH44	Taav
4C6G05NO.RED	*****	45.65	40.24
3P3C6G05.RED	47.57	48.08	40.14

1 INCH CONDUIT WITH 1/2 INCH THERMOLAG
+ 1/4 INCH UPGRADE

FILE NAME	CH43	CH44	Taav
3P3C6G06.RED	45.11	46.04	39.14

1 INCH CONDUIT WITH 1/4 INCH THERMOLAG
+ 1/4 INCH UPGRADE

FILE NAME	CH43	CH44	Taav
3P3C6G07.RED	46.99	46.80	40.28

SURFACE TEMPERATURES
4" CONDUIT

BARE 4 INCH CONDUIT

FILE NAME	CH43	CH44	Taav
3P6GNO04.RED	57.46	59.57	39.40
3P6GNO09.RED	59.35	60.82	40.58
475004NO.RED	62.33	56.67	40.99
475009NO.RED	57.16	57.36	39.99
8C6GNO04.RED	57.94	58.06	39.54
8C6GNO09.RED	59.22	60.34	39.78
ITEM04NO.RED	73.56	75.02	40.34

4 INCH CONDUIT WITH 1/2 INCH THERMOLAG

FILE NAME	CH43	CH44	Taav
P6GNO01.RED	49.61	46.33	39.90
75001NO.RED	51.07	51.11	39.35
C6GNO01.RED	50.99	49.97	41.06
TEM01NO.RED	61.44	65.14	40.80

4 INCH CONDUIT WITH 1/2 INCH THERMOLAG
+ 1/4 INCH UPGRADE

FILE NAME	CH43	CH44	Taav
3P6GNO02.RED	45.84	46.50	39.48
475002NO.RED	48.75	47.95	40.26
8C6GNO02.RED	49.65	49.33	40.68
ITEM02NO.RED	52.27	52.04	39.51

4 INCH CONDUIT WITH 1/4 INCH THERMOLAG
+ 1/4 INCH UPGRADE

FILE NAME	CH43	CH44	Taav
3P6GNO03.RED	45.85	46.79	39.23
475003NO.RED	50.15	49.83	40.63
8C6GNO03.RED	45.72	46.20	40.51
ITEM03NO.RED	52.79	*****	40.12

ATTACHMENT J

TEST SETUP INFORMATION

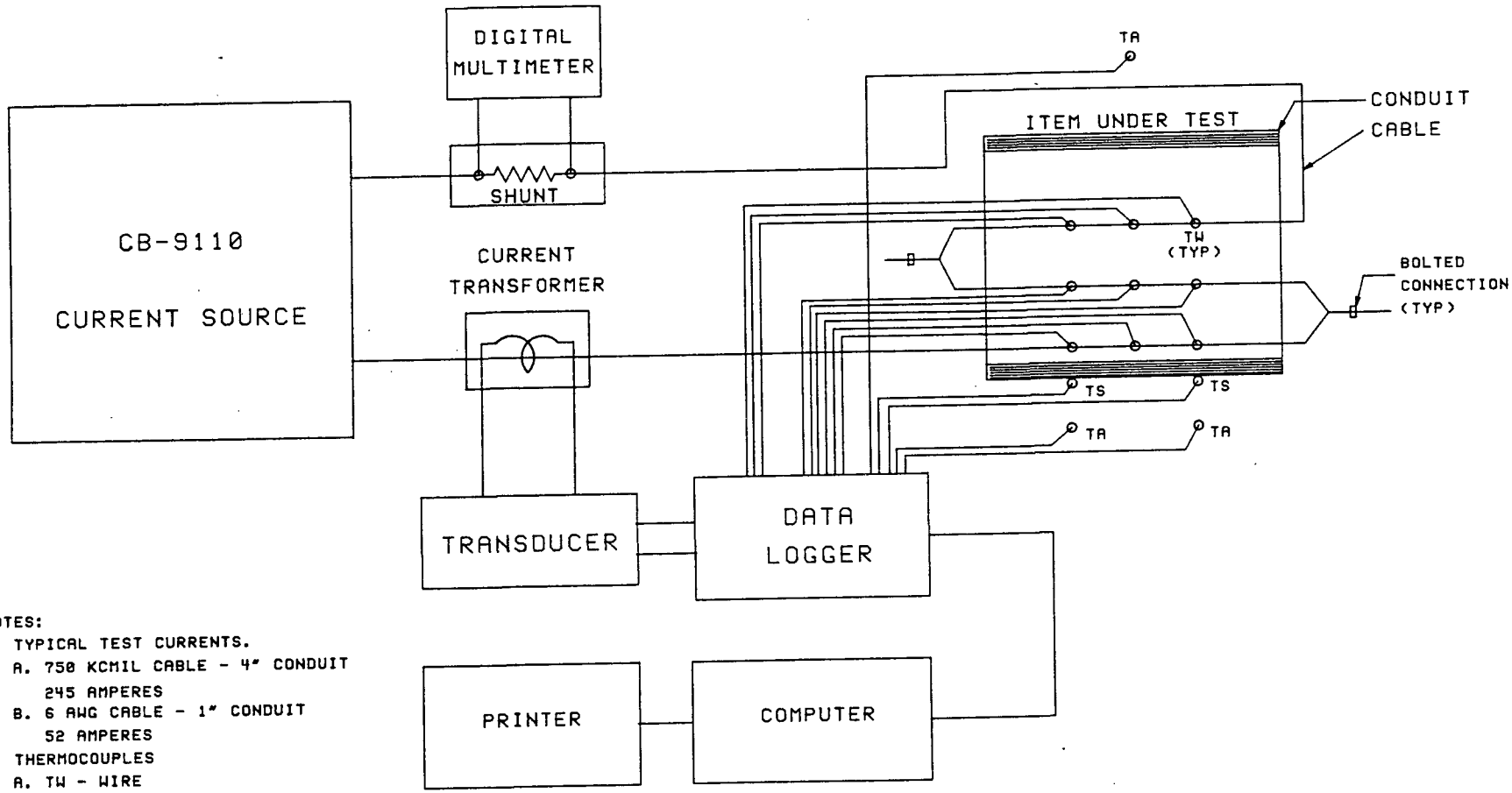

NOTES:
1. TYPICAL TEST CURRENTS.
   A. 750 KCMIL CABLE - 4" CONDUIT
      245 AMPERES
   B. 6 AWG CABLE - 1" CONDUIT
      52 AMPERES
2. THERMOCOUPLES
   A. TW - WIRE
   B. TA - AIR
   C. TS - CONDUIT SURFACE

TENNESSEE VALLEY AUTHORITY CENTRAL LABORATORY SERVICES DEPARTMENT	
TITLE TEST SETUP: AMPACITY TEST 3 CONDUCTOR CABLE	
DRAWN BY Frank A. Demy DATE 6-22-93	REVIEWED BY C L Lutledge DATE 6-22-93
JOB NUMBER 93-0501	DWG NO 930501D2 REV 0

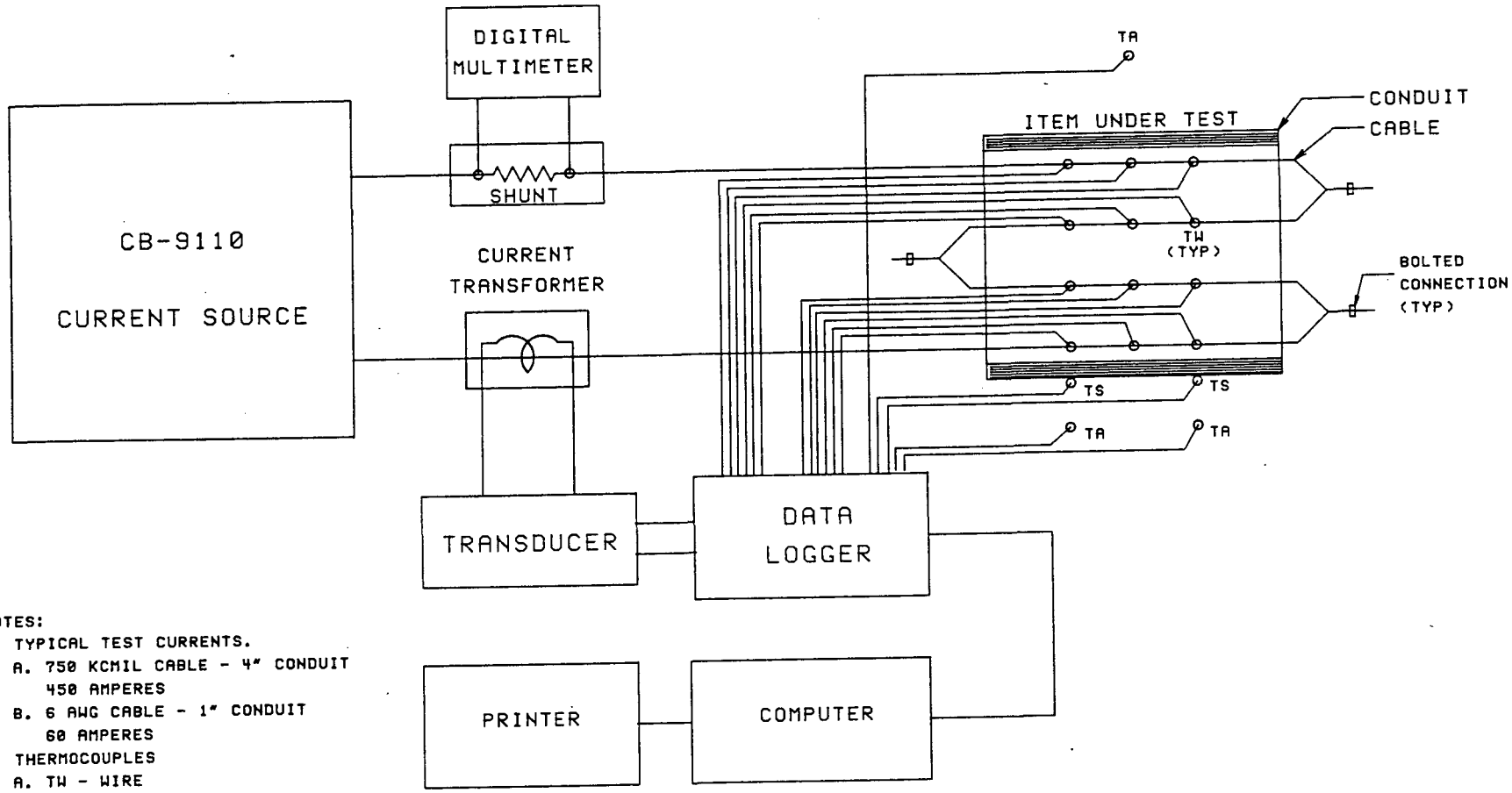

NOTES:
1. TYPICAL TEST CURRENTS.
   A. 750 KCMIL CABLE - 4" CONDUIT
      450 AMPERES
   B. 6 AWG CABLE - 1" CONDUIT
      60 AMPERES
2. THERMOCOUPLES
   A. TW - WIRE
   B. TA - AIR
   C. TS - CONDUIT SURFACE

TENNESSEE VALLEY AUTHORITY
CENTRAL LABORATORY SERVICES DEPARTMENT

TITLE: TEST SETUP: AMPACITY TEST 4 CONDUCTOR CABLE

DRAWN BY	DATE	REVIEWED BY	DATE	REV
Frank A. Dunay	6-22-93	C.L. Rutledge	6-22-93	0
JOB NUMBER 93-0501		DWG NO 930501D1		

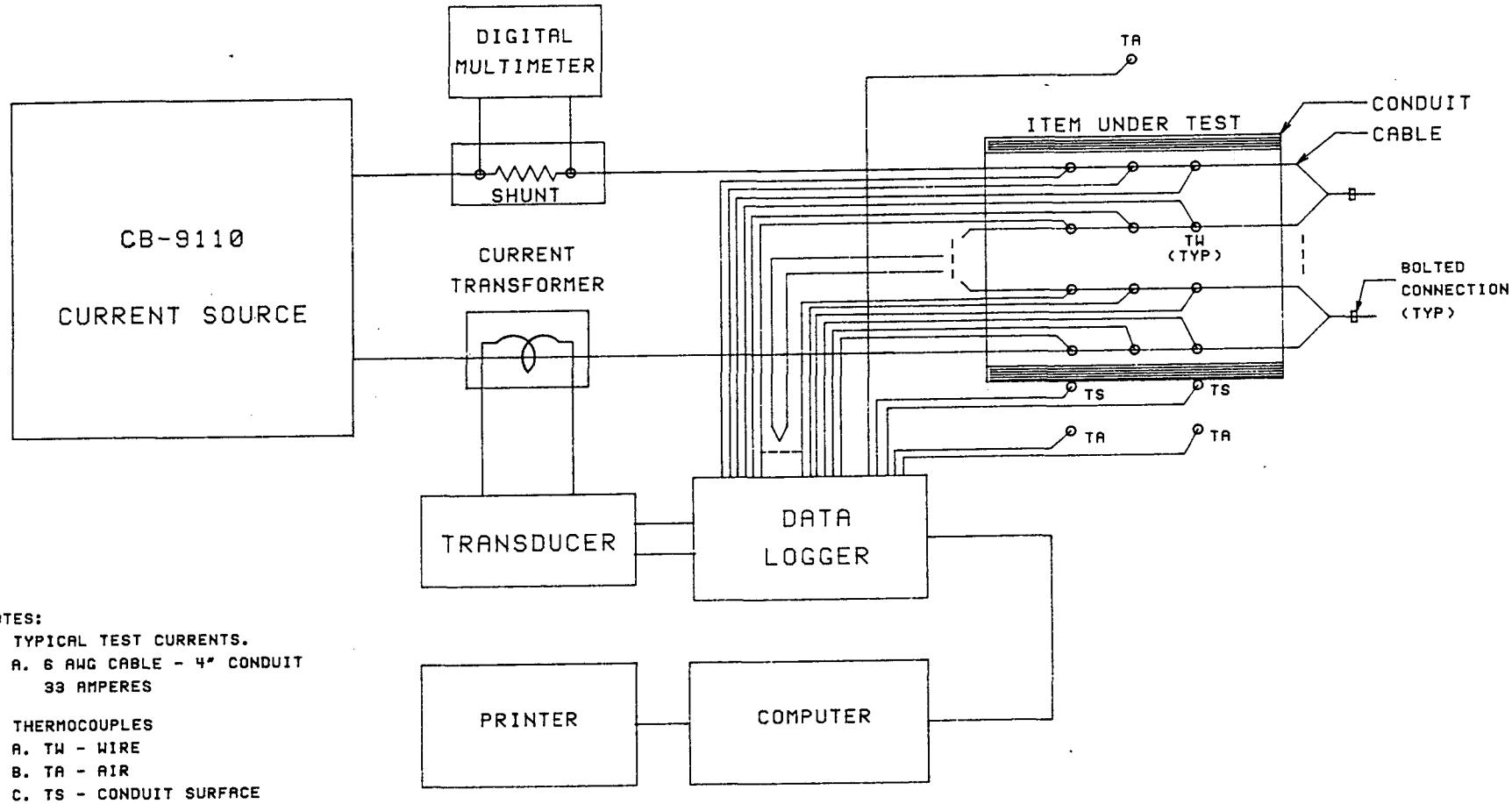

NOTES:
1. TYPICAL TEST CURRENTS.
   A. 6 AWG CABLE - 4" CONDUIT
      33 AMPERES
2. THERMOCOUPLES
   A. TW - WIRE
   B. TA - AIR
   C. TS - CONDUIT SURFACE

TENNESSEE VALLEY AUTHORITY CENTRAL LABORATORY SERVICES DEPARTMENT	
TITLE TEST SETUP: AMPACITY TEST 24 CONDUCTOR CABLE	
DRAWN BY Frank A. Demey DATE 6-22-93	REVIEWED BY C. L. Rutledge DATE 6-22-93
JOB NUMBER 93-0501	DWG NO 930501D3 REV 0

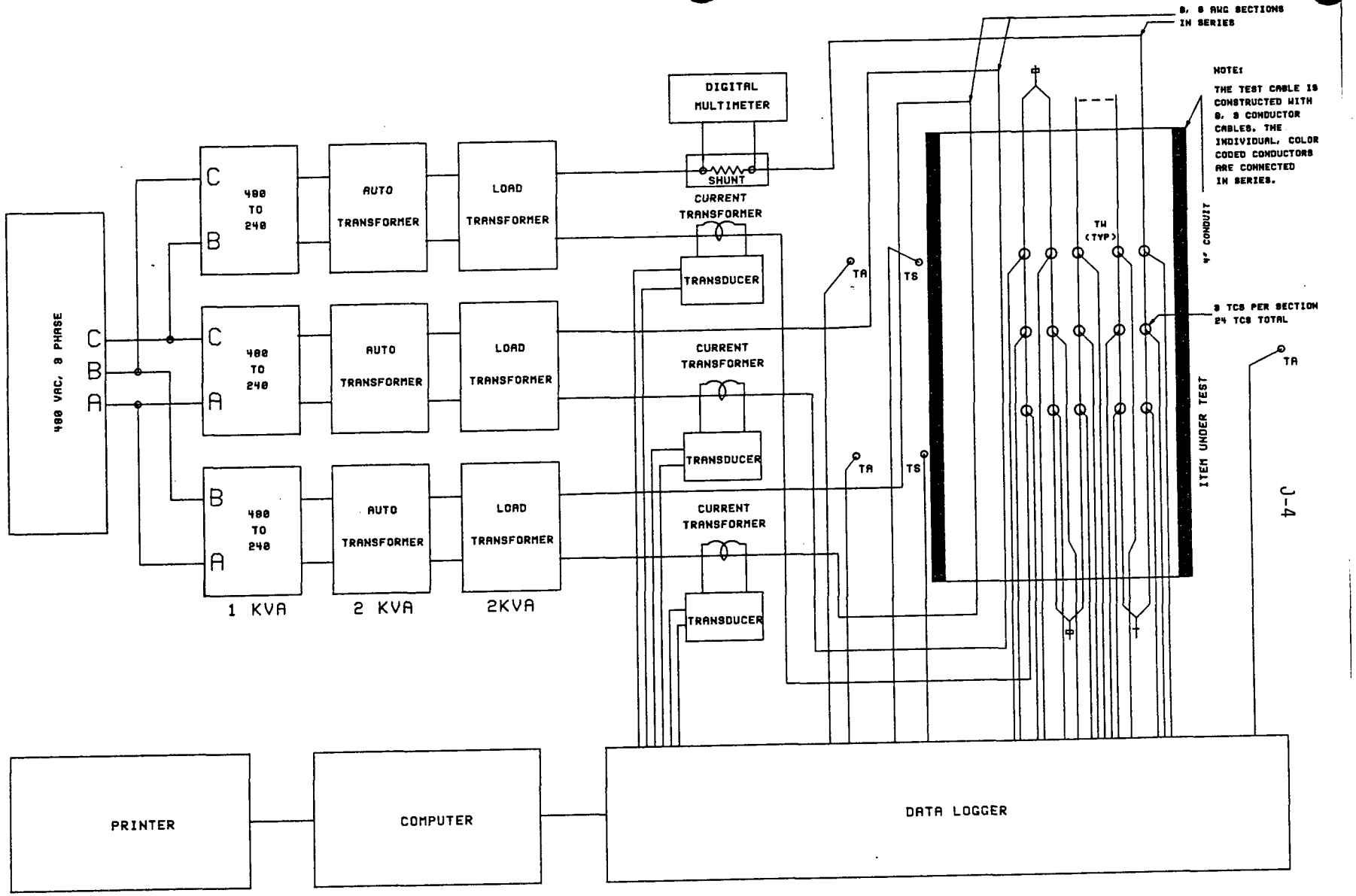

J-4

TENNESSEE VALLEY AUTHORITY			
CENTRAL LABORATORY SERVICES DEPARTMENT			
TITLE TEST SETUP: AMPACITY TEST 3 PHASE, 3 CONDUCTOR, 6 AWG			
DRAWN BY Frank A. Denney	DATE 6-22-93	REVIEWED BY C L Rutledge	DATE 6-22-93
JOB NUMBER 93-0501		DWG NO 93050106	REV 0

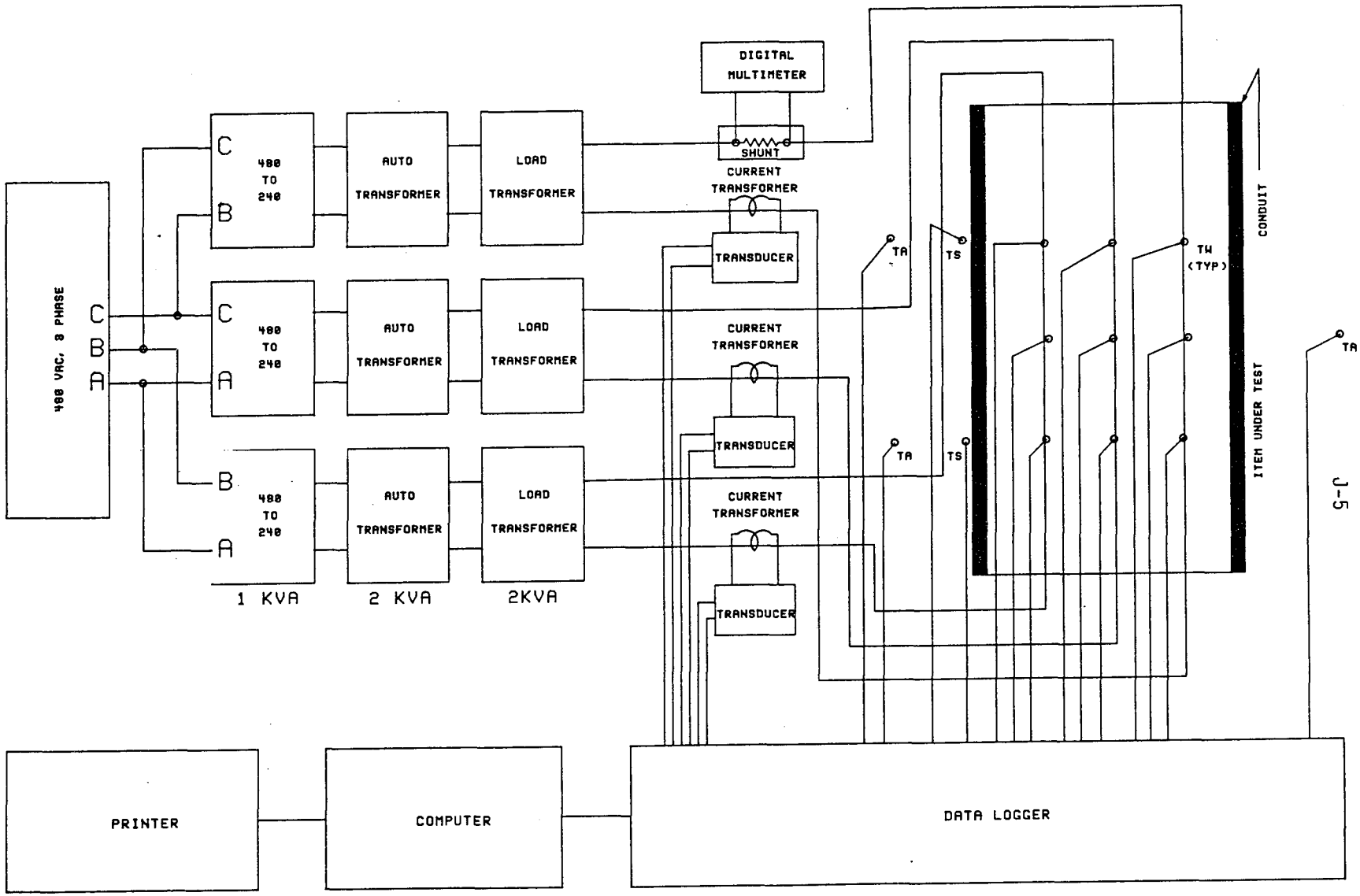

J-5

TENNESSEE VALLEY AUTHORITY	
CENTRAL LABORATORY SERVICES DEPARTMENT	
TITLE TEST SETUP: AMPACITY TEST 3 PHASE, 3 CONDUCTOR, 6 AWG	
DRAWN BY Frank A. Dewey DATE 6-22-93	REVIEWED BY C.L. Rutledge DATE 6-22-93
JOB NUMBER 93-0501	DWG NO 930501D5 REV 0

ONE AND FOUR INCH CONDUITS 3 CONDUCTOR TESTS

REFERENCE REPORT OF CALIBRATION DATED 02-23-93
FOR FLUKE 2286A TVA 890593

1" CONDUIT, 6 AWG

CHANNEL	T/C NUMBER	FUNCTION	T/C LOCATION	PRINTOUT HEADER
9	24	TEMP	1	Trd1
3	12	TEMP	1	Tbk1
6	15	TEMP	1	Twh1
1	10	TEMP	2	Trd2
4	13	TEMP	2	Tbk2
7	16	TEMP	2	Twh2
2	11	TEMP	3	Trd3
5	14	TEMP	3	Tbk3
8	17	TEMP	3	Twh3
40	18	TEMP	4	Tam1
41	19	TEMP	5	Tam2
42	20	TEMP	6	Tam3
43	21	TEMP	*	*
44	22	TEMP	*	*
70	**	AMPS	**	**
71	**	AMPS	**	**
72	**	AMPS	**	**
73	N/A	AMPS	N/A	It

*SPARE
**NOT USED FOR TH IS TEST

4" CONDUIT, 750 K CIRCULAR MILS

CHANNEL	T/C NUMBER	FUNCTION	T/C LOCATION	PRINTOUT HEADER
20	0	TEMP	1	Trd1
23	3	TEMP	1	Tbk1
26	6	TEMP	1	Twh1
21	1	TEMP	2	Trd2
24	4	TEMP	2	Tbk2
27	7	TEMP	2	Twh2
22	2	TEMP	3	Trd3
25	5	TEMP	3	Tbk3
28	8	TEMP	3	Twh3
40	18	TEMP	4	Tam1
41	19	TEMP	5	Tam2
42	20	TEMP	6	Tam3
43	21	TEMP	*	*
44	22	TEMP	*	*
70	N/A	AMPS	N/A	It
71	N/A	AMPS	N/A	It
72	**	AMPS	**	**
73	**	AMPS	**	**

ONE AND FOUR INCH CONDUITS 4 CONDUCTOR TESTS

REFERENCE REPORT OF CALIBRATION DATED 03-26-93

1" CONDUIT, 6 AWG

CHANNEL	T/C NUMBER	FUNCTION	LOCATION	HEADER
0	0	TEMP	1	Trd1
1	1	TEMP	1	Twh1
2	2	TEMP	1	Tbk1
4	4	TEMP	1	Tgr1
5	5	TEMP	2	Trd2
6	6	TEMP	2	Twh2
7 ***	7 ***	TEMP	2	Tbk2
8	8	TEMP	2	Tgr2
9	9	TEMP	3	Trd3
10	10	TEMP	3	Twh3
11	11	TEMP	3	Tbk3
12	12	TEMP	3	Tgr3
40	28	TEMP	4	Tam1
41	29	TEMP	5	Tam2
42	30	TEMP	6	Tam3
43	31	TEMP	*	*
44	32	TEMP	*	*
70	**	AMPS	**	**
71	**	AMPS	**	**
72	**	AMPS	**	**
73	N/A	AMPS	N/A	It

*SPARE
**NOT USED FOR THIS TEST
***REPLACED WITH T/C 13 CHANNEL 13 ON 03-30-93
TESTED SPECIMEN 93-0501-6 WITH THIS CONFIGURATION

4" CONDUIT, 750 K CIRCULAR MILS

CHANNEL	T/C NUMBER	FUNCTION	LOCATION	HEADER
20	14	TEMP	1	Trd1
21	15	TEMP	1	Twh1
22	16	TEMP	1	Tgr1
23	17	TEMP	1	Tbk1
24	18	TEMP	2	Trd2
25	19	TEMP	2	Twh2
26	20	TEMP	2	Tgr2
27	21	TEMP	2	Tbk2
28	22	TEMP	3	Trd3
29	23	TEMP	3	Twh3
30	24	TEMP	3	Tgr3
31	25	TEMP	3	Tbk3
40	28	TEMP	4	Tam1
41	29	TEMP	5	Tam2
42	30	TEMP	6	Tam3
43	31	TEMP	*	*
44	32	TEMP	*	*
70	N/A	AMPS	N/A	It
71	N/A	AMPS	N/A	It
72	**	AMPS	**	**
73	**	AMPS	**	**

FOUR INCH CONDUIT 24 CONDUCTOR SINGLE PHASE TEST
FOUR INCH CONDUIT THREE 8 CONDUCTOR 3 PHASE TEST

ALL OF THE THERMOCOUPLES ARE ON THE BLACK CONDUCTOR FOR THESE TWO SETS OF TESTS.

REFERENCE REPORT OF CALIBRATION DATED 04-29-93

CHANNEL	T/C NUMBER	FUNCTION	LOCATION	HEADER
0	0	TEMP	1	*
1	1	TEMP	1	*
2	2	TEMP	1	*
3	3	TEMP	1	*
4	4	TEMP	1	*
5	5	TEMP	1	*
6	6	TEMP	1	*
7	7	TEMP	1	*
8	8	TEMP	2	*
9	9	TEMP	2	*
10	10	TEMP	2	*
11	11	TEMP	2	*
20	14	TEMP	2	*
21	15	TEMP	2	*
22	16	TEMP	2	*
23	17	TEMP	2	*
24	18	TEMP	3	*
25	19	TEMP	3	*
26	20	TEMP	3	*
27	21	TEMP	3	*
28	22	TEMP	3	*
29	23	TEMP	3	*
30	24	TEMP	3	*
31	25	TEMP	3	*
40	28	TEMP	4	Tam1
41	29	TEMP	5	Tam2
42	30	TEMP	6	Tam3
43	31	TEMP	***	***
44	32	TEMP	***	***
70	**	AMPS	**	**
71	N/A	AMPS	N/A	Ib
72	N/A	AMPS	N/A	Iw
73	N/A	AMPS	N/A	Ir

* THE COMPUTER PROGRAM SELECTED THE MAXIMUM AND MINIMUM TEMPERATURES AT EACH LOCATION AND THEY ARE SHOWN ON THE PRINTOUT.
**NOT USED
***SURFACE TEMPERATURE NOT ON PRINTOUT

ONE INCH CONDUIT THREE PHASE TEST

REFERENCE REPORT OF CALIBRATION DATED 04-29-93

CHANNEL	T/C NUMBER	FUNCTION	LOCATION	HEADER
6	6	TEMP	1	Twh1
7	7	TEMP	1	Tbk1
5 ***	5 ***	TEMP	1	Trd1
21	15	TEMP	2	Twh2
23	17	TEMP	2	Tbk2
22	16	TEMP	2	Trd2
30	24	TEMP	3	Twh3
31	25	TEMP	3	Tbk3
29	23	TEMP	3	Trd3
40	28	TEMP	4	Tam1
41	29	TEMP	5	Tam2
42	30	TEMP	6	Tam3
43	31	TEMP	*	*
44	32	TEMP	*	*
70	**	AMPS	**	**
71	N/A	AMPS	N/A	Ib
72	N/A	AMPS	N/A	Iw
73	N/A	AMPS	N/A	Ir

*SURFACE TEMPERATURE, NOT ON PRINTOUT
**NOT USED
***REPLACED WITH T/C 2, CHANNEL 2 ON 06-19-93
TESTED SPECIMENS 93-0501-5 AND 93-0501-7
WITH THIS CONFIGURATION.

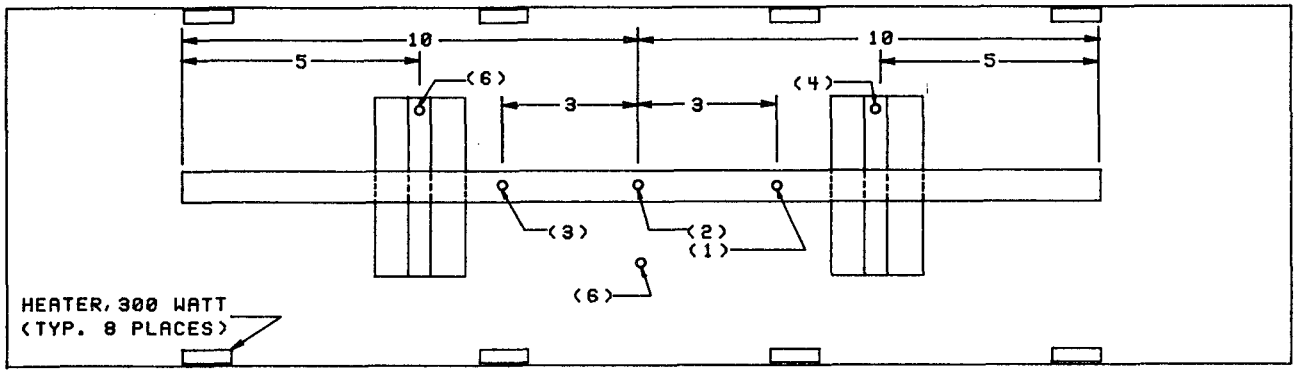

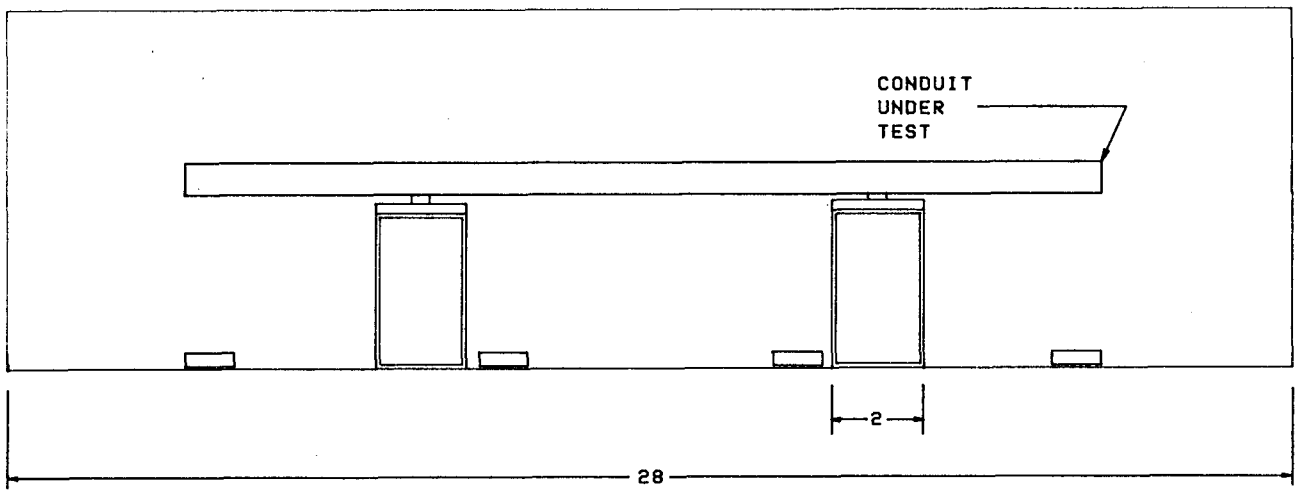

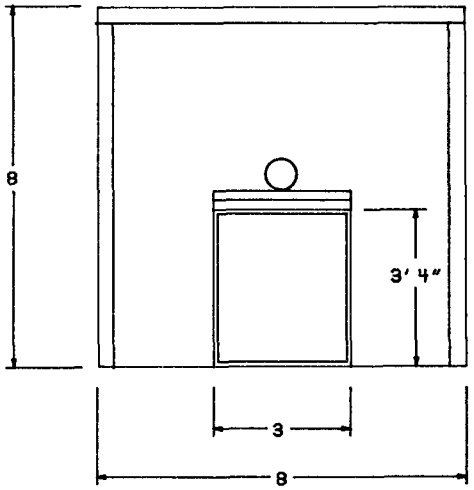

NOTES:

1. UNLESS OTHERWISE INDICATED, DIMENSIONS ARE IN FEET.
2. NUMBERS IN PARENTHESIS REFER TO THERMOCOUPLE POSITIONS.

TENNESSEE VALLEY AUTHORITY	
CENTRAL LABORATORY SERVICES DEPARTMENT	
TITLE: TEST CHAMBER: AMPACITY TESTS	
DRAWN BY: Frank A. Dewey DATE: 6-22-93	REVIEWED BY: C L Rutledge DATE: 6-22-93
JOB NUMBER: 93-0501	DWG NO: 930501R1

ATTACHMENT K

PHOTOGRAPHS

Photograph 1 - Measurement of the pre-formed Thermolag sections

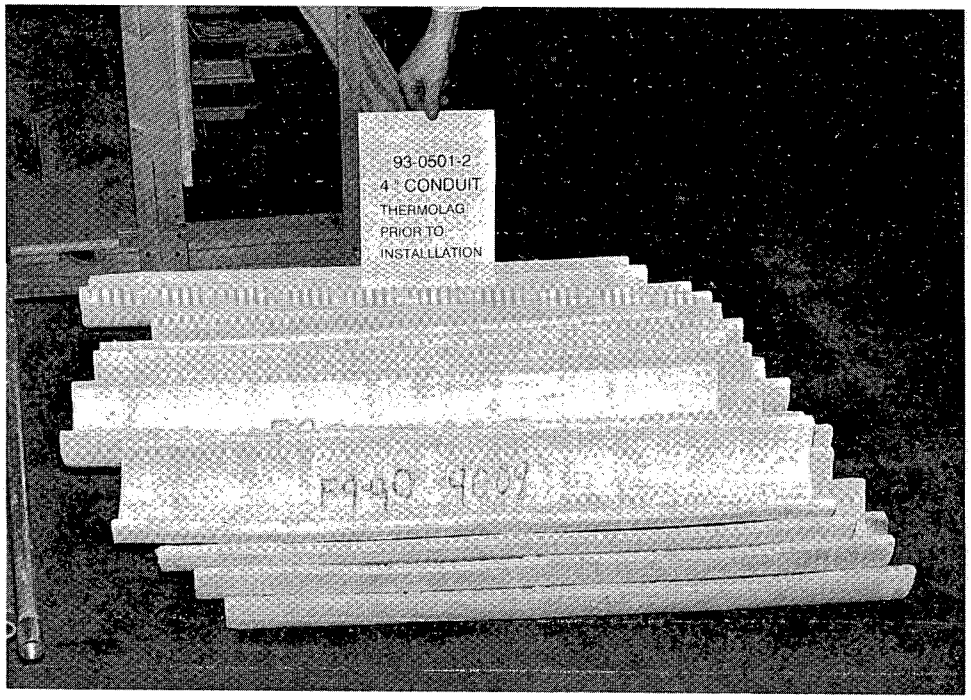

Photograph 2 - One group of 1/2" Thermolag ready for installation

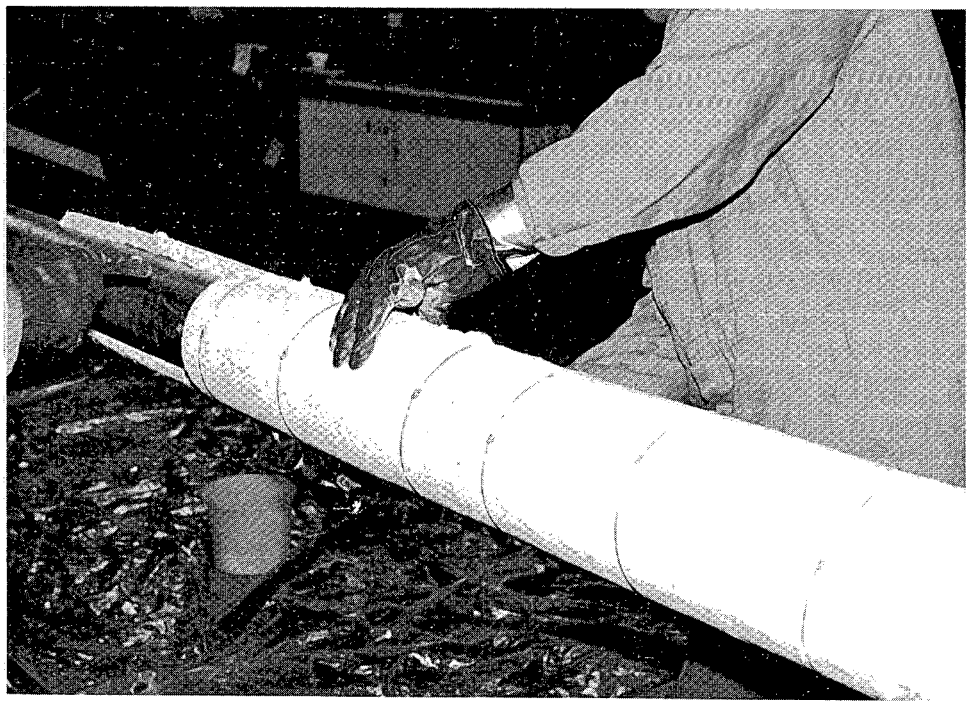

Photograph 3 - Installation of the Thermolag

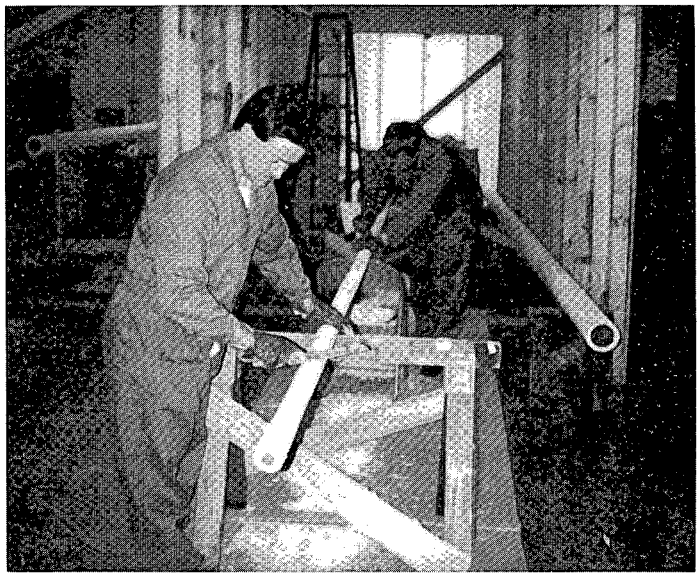

1" CONDUIT WITH 1/4" BASE DURING RASPING.

Photograph 4 - 1" conduit with 1/4" base during rasping

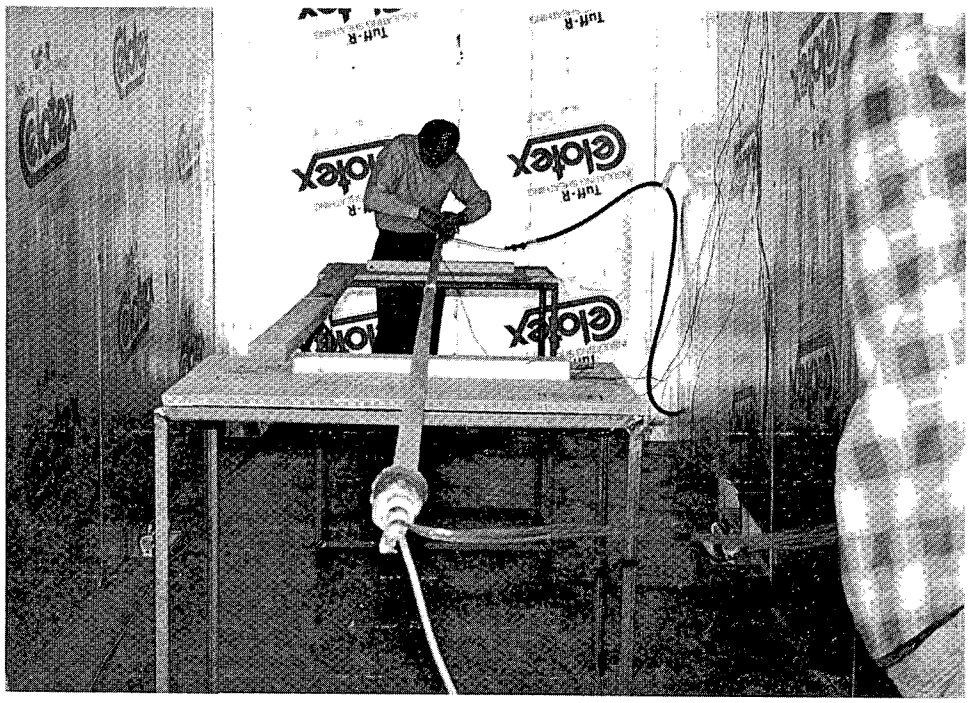

Photograph 5 - Environmentally controlled chamber 1" configuration

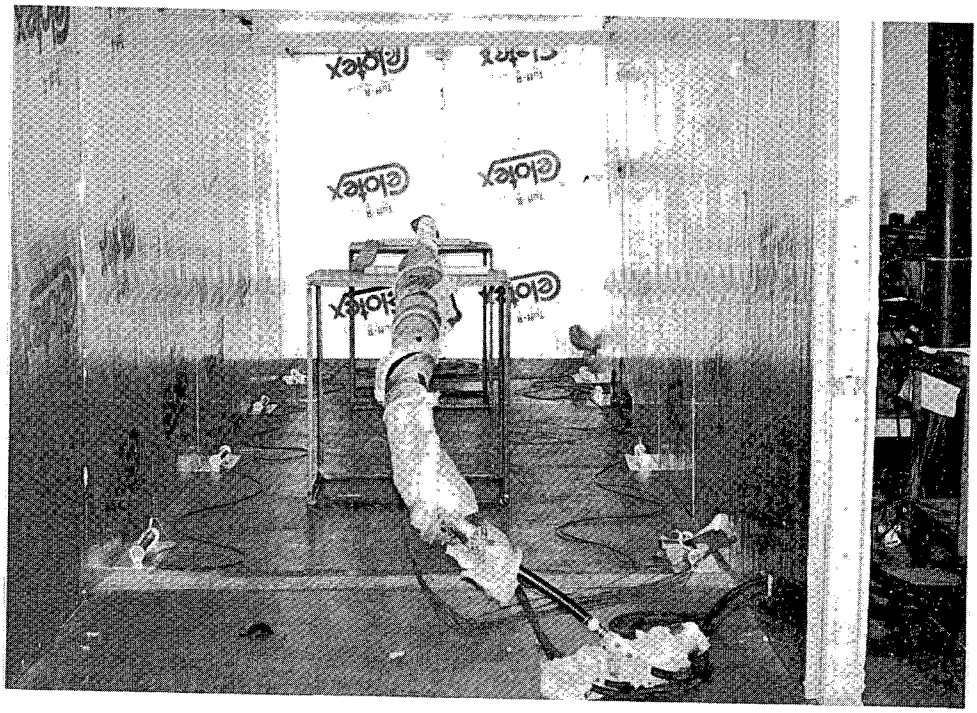

Photograph 6 - Environmentally controlled chamber 4" configuration

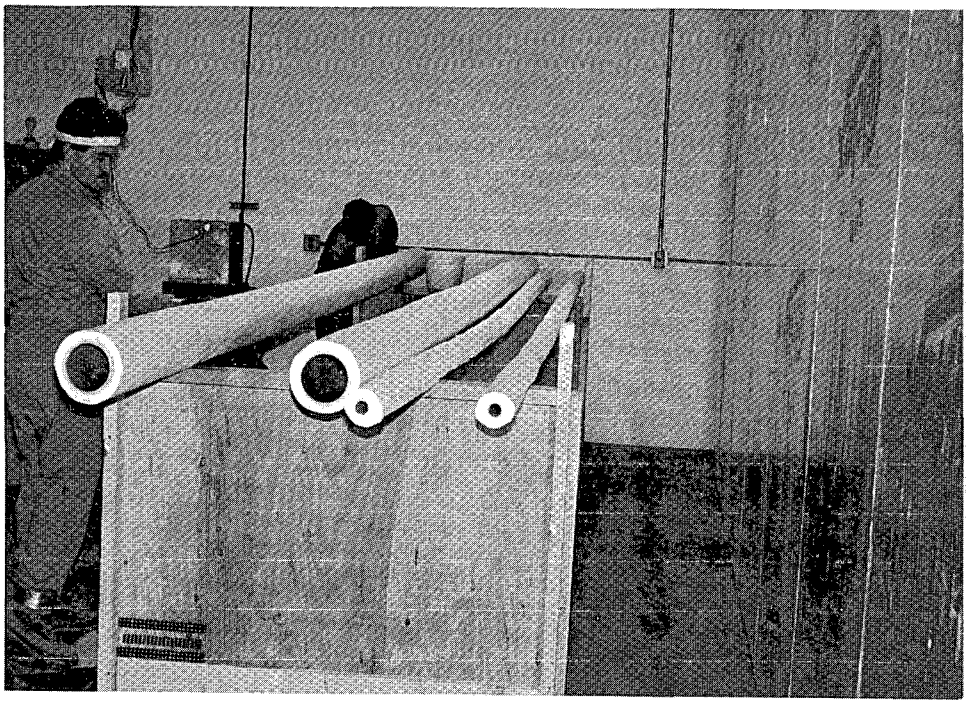

Photograph 7 - Specimens in various stages of preparation

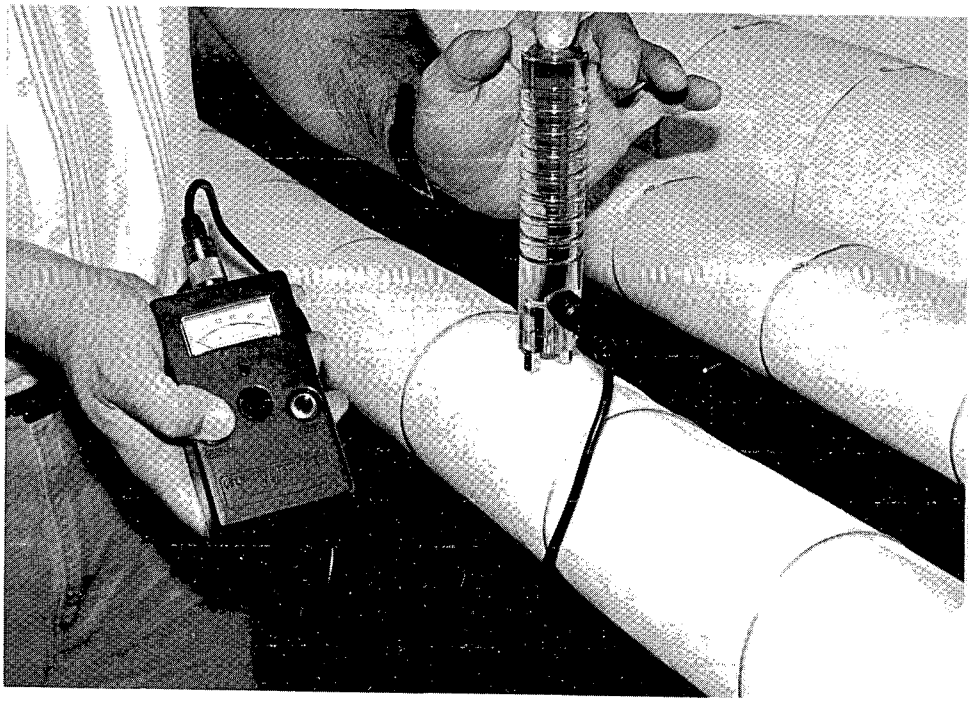

Photograph 8 - Moisture Content Measurement

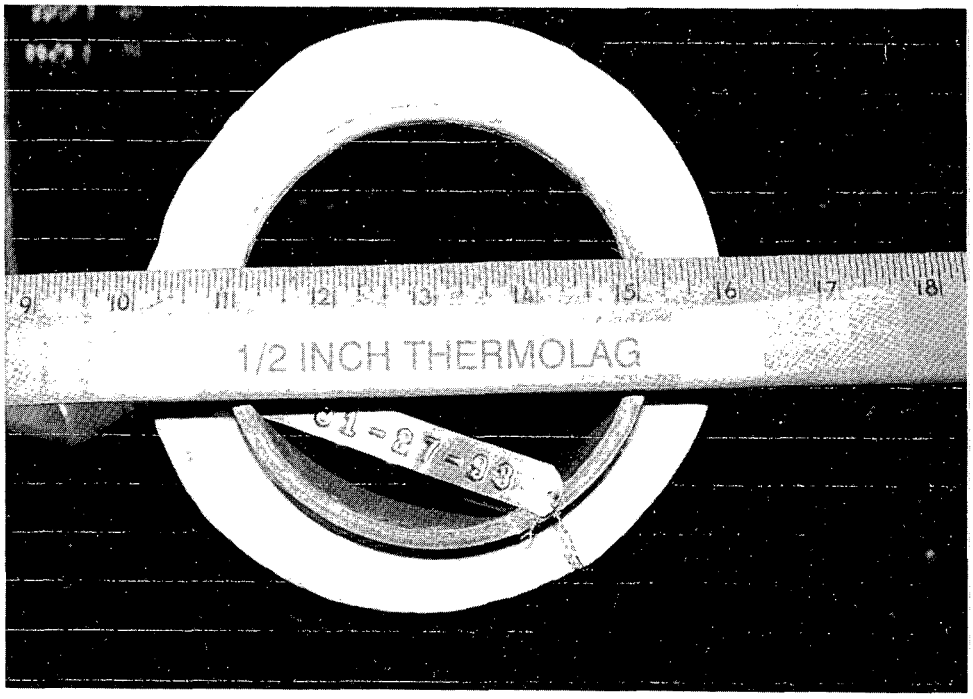

Photograph 9 - Specimen 93-0501-1, 4" conduit with 1/2" base

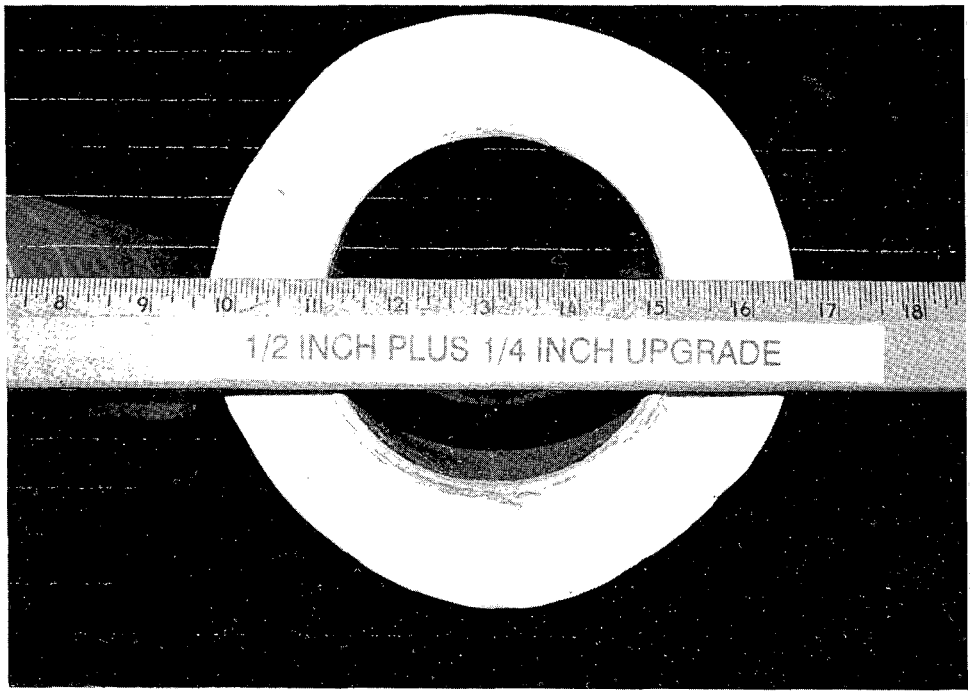

Photograph 10 - Specimen 93-0501-2, 4" conduit with 1/2" base with 1/4" upgrade

Photograph 11 - Specimen 93-0501-3, 4" conduit with 1/4" base with 1/4" upgrade

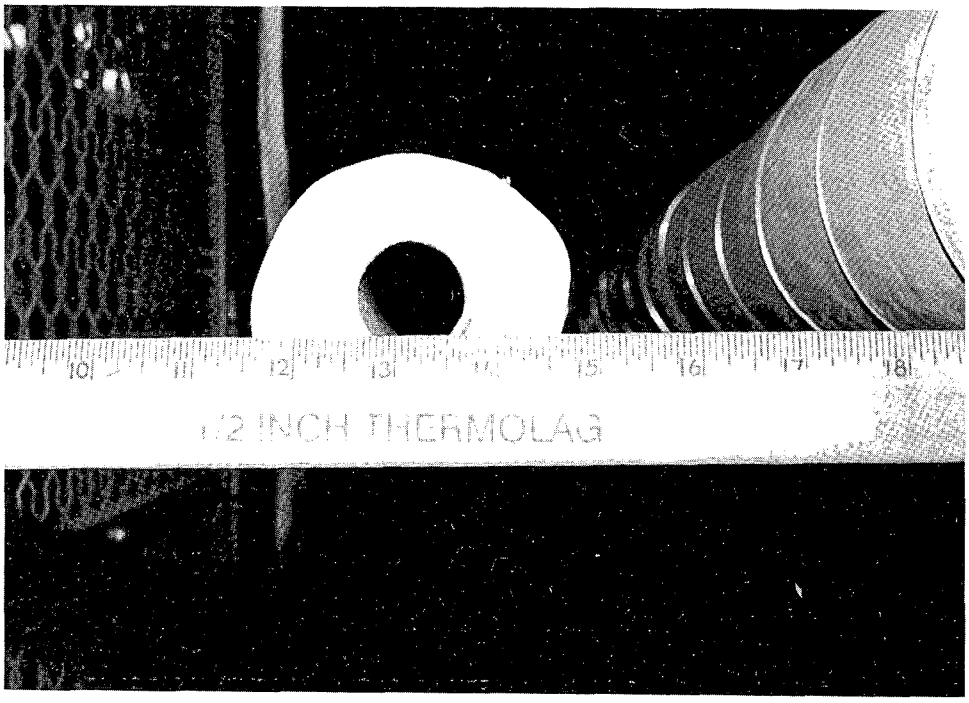

Photograph 12 - Specimen 93-0501-5 1" conduit with 1/2" base

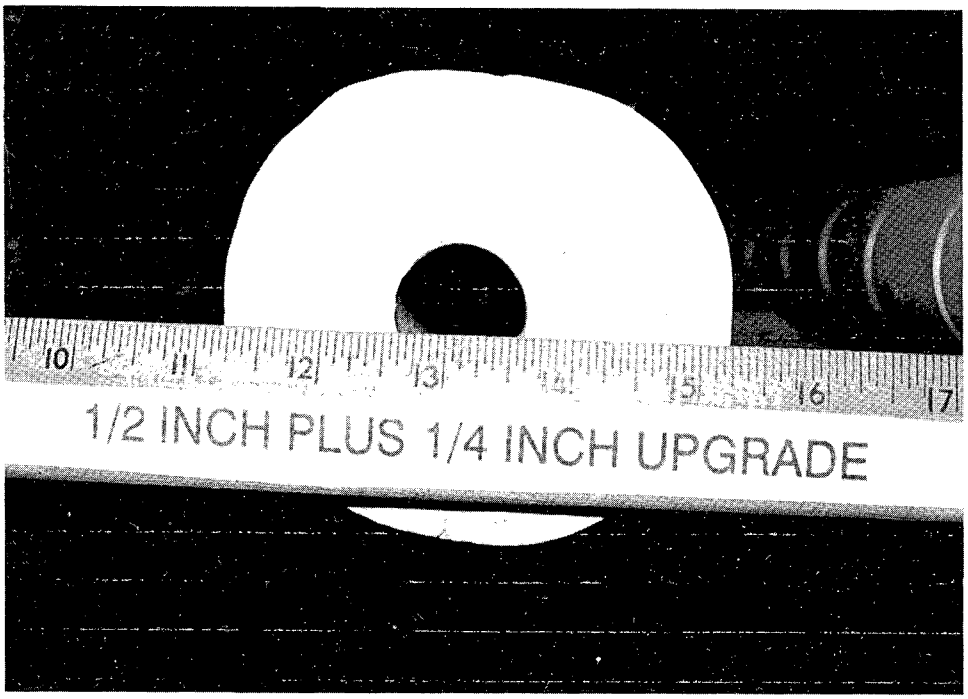

Photograph 13 - Specimen 93-0501-6, 1" conduit with 1/2" base with 1/4" upgrade

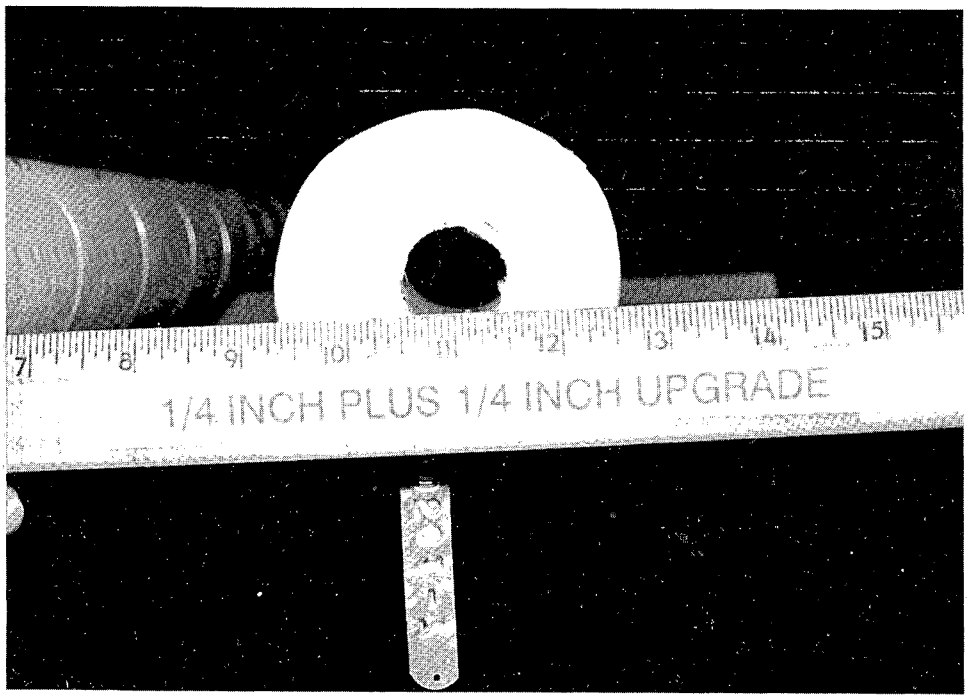

Photograph 14 - Specimen 93-0501-7 1" conduit with 1/4" base and 1/4" upgrade

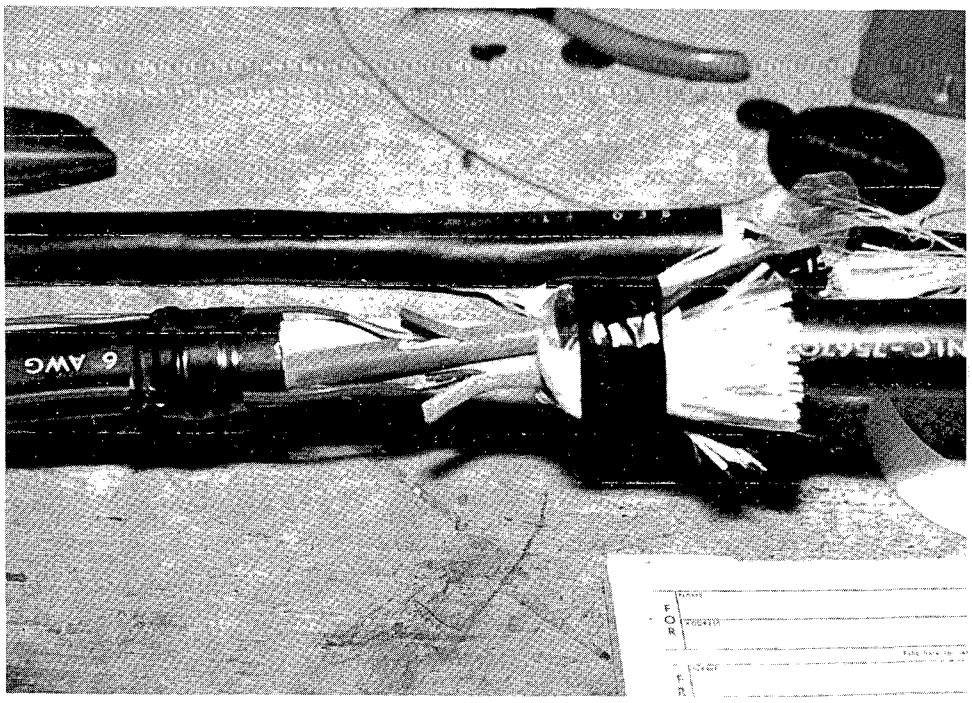

Photograph 15 - Thermocouple installation in the 6 AWG test cable

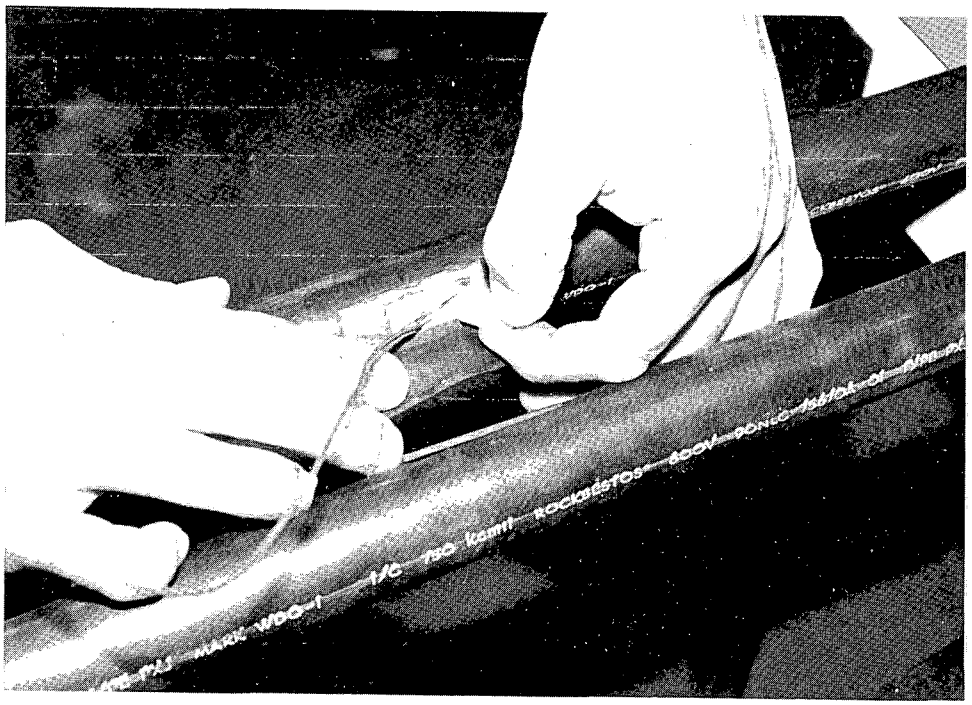

Photograph 16 - Thermocouple installation in the 750 MCM cable

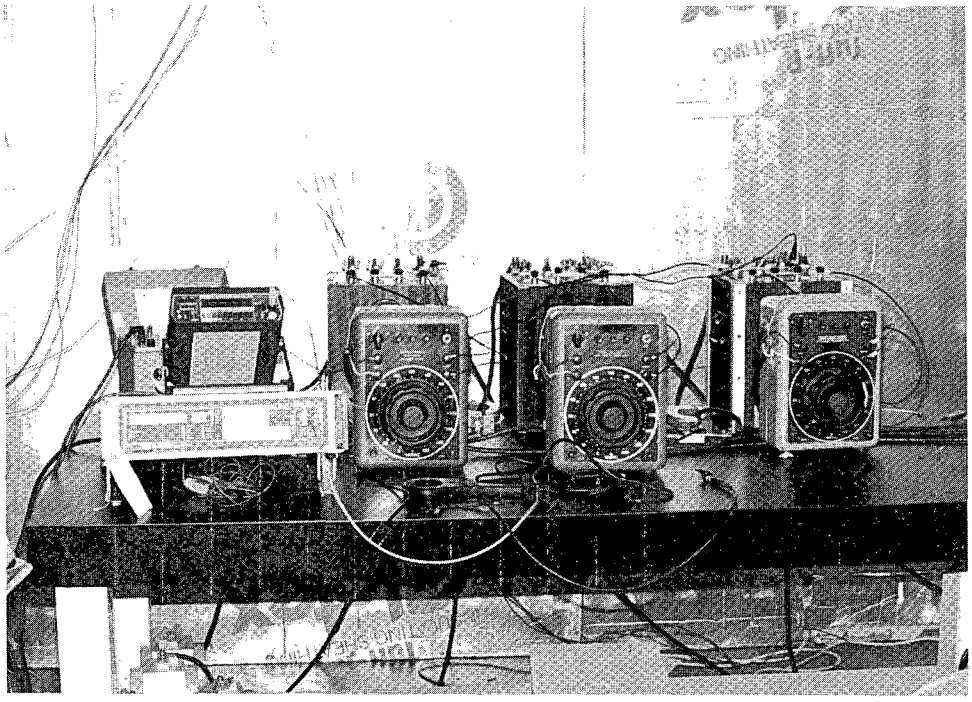

Photograph 17 - Three phase test set up

ATTACHMENT L

ANOMALIES

Notice of Anomaly

page 1 of 3

Date: 3-12-93
Job No: 93-0501

Notice No.: 93-0008
Customer: WBN

Initiated by: C L Rutledge

Notification Made To: Bill Roop
Notification Made By: Cindy Rutledge

Date: 3-12-93
Via: In Person

Nature of Anomaly: ____ Specimen ____ Procedure ✓ Instrumentation

____ Test Fixture

Date of Anomaly: 3-12-93
Part Name: Fluke 2286 Data Logger

I.D. No.: 890593
Part No.: N/A

Test: "WBN Testing to Determine Ampacity Derating Factors for Fire Protected Cables"

Requirements: To have current accuracy of ±1% of reading

Description of Anomaly: see attached

Comments and Recommendation: see attached

Disposition: CONCUR WITH RECOMMENDATIONS.

Project Engineer C L Rutledge /Date 3-12-93

QA/QC Supervisor [illegible] /Date 3-16-93

Engg Svcs Supv [illegible] /Date 3/16/93

Customer Approval [illegible] /Date 3/12/93

Description of Anomaly: Test current readings were checked at various times during the testing to ensure that the current calibration of the data logger was within tolerance. All checks were within tolerance until 03-12-93 at 7:30 a.m.

At 7:30 a.m. (after completing the last conduit test) readings from the Fluke 8506A (TVA 890647) and Shunt (TVA 903849) indicated 54 Amps and the data logger indicated 52.5 Amps. This error is outside of the accuracy specification of 1% of reading.

Comments and Recommendations: A Keithly 197 (TVA 890279) was then used to check the current (this instrument was used with the batteries as the power source and not plugged in the wall outlet) and it indicated the current was 52.5 Amps.

Another Fluke 8506A (TVA 572564) was obtained and the current was rechecked. This Fluke 8506A and shunt indicated 54 Amps and the data logger indicated 52.5 Amps. The current was also checked using a Keithly 2001 (uncertified) and the current was 52.5 Amps and the data logger indicated 52.5 Amps.

The Fluke 8506A (TVA 890647) and the Keithly 2001 were taken to the lab and checked at 5.00 mV.
Fluke 8506A 5.010 mV
Keithly 2001 5.001 mV

The instruments were returned to the EQ Lab and connected to the shunt but the power supply was changed. Specifically the Fluke 8506A (TVA 809647) was plugged into an isolation transformer and the following readings were made.

Fluke Data Logger	52.44 Amps	*
Fluke 8506A (572564)	52.6 Amps	
Fluke 8506A (890647)	52.3 Amps	*
Keithly 2001	52.4 Amps	**

These readings are within the required accuracy (±1 % of reading)

*Instruments that have previously been used to verify the current.
** The Keithly 2001 was loaned to the laboratory from Keithly and therefore is not a certified laboratory instrument. It was used to check the current because the manufacturer specs are about the same as the Fluke 8506A.

An oscilloscope was connected to the shunt to check the A.C. waveform for distortion. No obvious distortion was apparent.

The readings obtained by the data logger from approximately 03-11-93 at 7:00 am to 03-12-93 at 7:30 am are accurate based on the following:

1) Readings with the Keithly 197 and Keithly 2001 were consistent with the data logger.
2) Readings with the Fluke 8506A (TVA 890647) were consistent with the data logger when the Fluke 8506A was plugged in to an isolation transformer.

The source of the signal causing the Fluke 8506A to read in error was not identified so it is recommended that the Fluke 8506A be plugged into the isolation transformer to obtain current readings for calibration purposes during the remainder of this testing.

Notice of Anomaly

Date: 3-25-93
Job No: 93-0501

Notice No.: 93-0011 Initiated by: C L Rutledge
Customer: WBN / Chattanooga

Notification Made To: Kent Brown Date: 3-25-93
Notification Made By: Cindy Rutledge Via: Telephone

Nature of Anomaly: ____ Specimen ____ Procedure ✓ Instrumentation

____ Test Fixture

Date of Anomaly: 3-25-93 I.D. No.: 890593
Part Name: Fluke Data Acquisition Part No.: N/A

Test: "WBN Testing to Determine Ampacity Derating Factors for Fire Protected Cables"

Requirements: Perform post test check of instrumentation. Reference NCR No 93047.

Description of Anomaly: Two thermocouples C6 and C26 were reading open.

Comments and Recommendation: (see attached)

Disposition: CONCUR WITH RECOMMENDATIONS.

Project Engineer C L Rutledge /Date 3-25-93 for QA/QC Supervisor [illegible] /Date 3-26-93
Engg Svcs Supv. [illegible] /Date 3/26/93 Customer Approval [illegible] /Date 3-26-93

Anomaly 93-~~0501~~ 0011 CLR 3-27-93
Page 2 of

Comments and Recommendations:
The data obtained from the thermocouples during the test was consistent with the other temperature reading obtained at each location and along each conductor. One of the open thermocouples was on the 6 AWG (location 1, white conductor) test assembly and one of the open thermocouples was on the 750 MCM (location 1, white conductor) assembly. There were three thermocouples at location 1 and three thermocouples on the white conductor in each case. The thermocouples were placed between copper ~~stands~~ strands for each conductor to accurately measure the conductor temperature. The thermocouples were removed to perform the post test calibration and at that time the thermocouple indicated open.

It is recommended that the data obtained during the testing be accepted as accurate and no further action is required.

Notice of Anomaly

Date: 3-30-93
Job No: 93-0501

Notice No.: 93-0013
Customer: WBN

Initiated by: C.L. Rutledge

Notification Made To: Kent Brown
Notification Made By: Cindy Rutledge

Date: 3-30-93
Via: Telephone

Nature of Anomaly: ____ Specimen ____ Procedure ✓ Instrumentation

____ Test Fixture

Date of Anomaly: 3-30-93
Part Name: Thermocouple

I.D. No.: T/C 7 Channel 7
Part No.:

Test: "WBN Testing to Determine Ampacity Derating Factors for Fire Protected Cable"

Requirements: Perform post test check of instrumentation Reference NCR 93048.

Description of Anomaly: The bead on thermocouple 7 broke

Comments and Recommendation: Replace with a spare T/C 13 and continue testing. Do not perform post test check and accept data collected to this point. CLR 3-30-93

Disposition: CONCUR WITH RECOMMENDATION

Project Engineer: C.L. Rutledge /Date 3-31-93 QA/QC Supervisor: D.M. [illegible] /Date 3-31-93

Engg Svcs Supv: [illegible] /Date 3/31/93 Customer Approval: K.W. Brown /Date 4-12-93

Notice of Anomaly

Date: 4-23-93
Job No: 93-0501

Notice No.: 93-0015
Customer: WBN

Initiated by: CL Rutledge

Notification Made To: Bill Roop
Notification Made By: Cindy Rutledge

Date: 4-23-93
Via: Telephone

Nature of Anomaly: ____ Specimen ____ Procedure ✓ Instrumentation

____ Test Fixture

Date of Anomaly: 4-23-93
Part Name: Fluke 2286 Data Logger

I.D. No.: 890593
Part No.: N/A

Test: "WBN Testing to determine Ampacity Derating Factor for Fire Protected Cables"

Requirements: Perform post test check of instrumentation Reference NCR 93048.

Description of Anomaly: Channel 8 - 4C 6AWG Location 2 green wire and Channel 21 - 4C 750 MCM Location 1 white wire were open Channel 3 was also open but was not used for any measurements.

Comments and Recommendation: Do not perform post test check for these thermocouples and accept the data taken using the thermocouples

Disposition: I CONCUR WITH RECOMMENDATION.

Project Engineer CL Rutledge /Date 4-23-93 for QA/QC Supervisor [illegible] /Date 4-26-93

Engg Svcs Supv [illegible] /Date 4/26/93 Customer Approval [illegible] /Date 4-23-93

Notice of Anomaly

Date: 5-10-93
Job No: 93-0501

Notice No.: 93-0017 Initiated by: C. L. Rutledge
Customer: WBN

Notification Made To: Bill Roop Date: 5-10-93
Notification Made By: Cindy Rutledge Via: Telephone

Nature of Anomaly: ____ Specimen ____ Procedure ✓ Instrumentation

____ Test Fixture

Date of Anomaly: 5-10-93 I.D. No.: 506324
Part Name: Load Cell Part No.: N/A

Test: "WBN Testing to Determine Ampacity Derating Factors for Fire Wrapped Raceways"

Requirements: Weigh the conduit and conduit with Thermolag applied. (Reference NCR 93046)

Description of Anomaly: The load cell 506324 was out of tolerance by ~~±.02~~ .02 lbs at 500 lbs. One measurement was made at 430 lbs The load cell was within tolerance at 400 lbs. The tolerance on the load cell is ± 1 lb.
CLR 5-10-93

Comments and Recommendation: This out of Tolerance of .02 lbs is insignificant. No further action is required.

Disposition: CUSTOMER CONCURS WITH RECOMMENDATION.

Project Engineer C L Rutledge /Date 5-10-93 QA/QC Supervisor D. M. Apley /Date 5-11-93

Engg Svcs Supv [signature] /Date 5/11/93 Customer Approval [signature] /Date 5-12-93

Notice of Anomaly

Date: 06-17-93
Job No: 93-0501

Notice No.: 93-0023
Customer: WBN

Initiated by: C. L. Rutledge

Notification Made To: Bill Roop
Notification Made By: C. L. Rutledge

Date: 06-17-93
Via: Telephone

Nature of Anomaly: ____ Specimen X Procedure ____ Instrumentation

____ Test Fixture

Date of Anomaly: 06-16-93 & 06-17-93
Part Name: Fluke 2286A

I.D. No.: 890593
Part No.: N/A

Test: "WBN Testing to Determine Ampacity Derating Factors for Fire Protected Cables"

Requirements: Calibrate the instrumentation for the ranges used.

Description of Anomaly: see attached.

Comments and Recommendation: see attached

Disposition: CUSTOMER CONCURS WITH RECOMMENDATION.

Project Engineer C. L. Rutledge /Date 6-17-93 QA/QC Supervisor D. M. Oxley /Date 6-17-93

Engg Svcs Supv [illegible] /Date 6/17/93 Customer Approval [illegible] /Date 6-17-93

Description of Anomaly: Upon examination of the data from the 1" conduit three phase test the current was approximately 63 amps. A review of the report of calibration showed Channels 71, 72, and 73 were certified from 20 to 50 amps. Additionally, the report of calibration indicates on the cover sheet the report is for testing in 4" Conduit 3 phase testing only.

Comments and Recommendations: The report of calibration was dated 04/29/93. The request to test the 1" conduit with three phase power supply was dated 06/10/93. At the time the report of calibration was prepared, the ranges certified encompassed ranges required for the testing.

On 06-17-93 the current indication from the data logger for channels 71, 72, and 73 were checked at 70 amps and were within tolerance (+/- 1 % of reading). The data is listed below:

Standards Used: 572564, 900484

Channel 71

STD mV	STD (Amps)	UUT VDC	Ratio	Current Amps	Error %
70.22	69.88	1.7533	200:5	70.13	0.36

Channel 72

STD mV	STD (Amps)	UUT VDC	Ratio	Current Amps	Error %
70.33	69.99	1.7625	200:5	70.50	0.73

Channel 73

STD mV	STD (Amps)	UUT VDC	Ratio	Current Amps	Error %
70.28	69.95	1.7618	200:5	70.47	0.75

I recommend the following:

1) The test for specimen 93-0501-8 performed on 06-16-93 be accepted.
2) All of the other 1" conduit tests as described in revision 5 of the test plan be completed with no further certification required.
3) The post test calibration will included the check at 70 amps.
4) The cover sheet for the pre-test calibration will not be revised to indicate the report was used for 1" 3 phase testing. The cover sheet for the post test report of calibration will indicate this calibration encompasses the 4" and 1" conduit 3 phase test.

Notice of Anomaly

Date: 06-19-93
Job No: 93-0501

Notice No.: 93-0024
Customer: WBN

Initiated by: C. L. Rutledge

Notification Made To: Bill Roop
Notification Made By: C. L. Rutledge

Date: 06-19-93
Via: Voice Mail

Nature of Anomaly: ____ Specimen ____ Procedure X Instrumentation

____ Test Fixture

Date of Anomaly: 06-19-93
Part Name: Fluke 2286A Channel 5

I.D. No.: 890593
Part No.: N/A

Test: "WBN Testing to Determine Amapacity Derating Factors for Fire Protected Cables"

Requirements: Perform pre- and post-test calibration.

Description of Anomaly: Thermocouple 5 (Location 1, red conductor, 3 phase, 1" conduit) bead broke.

Comments and Recommendation: Replace with thermocouple 2, continue testing, and do not perform post-test check.

Disposition: CUSTOMER CONCURS WITH RECOMMENDATION.

Project Engineer C.L. Rutledge /Date 6-19-93 QA/QC Supervisor D.M. Oakley /Date 6-21-93

Engg Svcs Supv [illegible] /Date 6/21/93 Customer Approval [illegible] /Date 6/21/93

Notice of Anomaly

Date: 06-24-93
Job No: 93-0501

Notice No.: 93-8025 Initiated by: C. L. Rutledge
Customer: WBN

Notification Made To: Bill Roop Date: 06-24-93
Notification Made By: C. L. Rutledge Via: Telephone

Nature of Anomaly: ____ Specimen ____ Procedure X Instrumentation

____ Test Fixture

Date of Anomaly: 06-23-93 I.D. No.: 890593
Part Name: Fluke 2286A Part No.:

Test: "WBN Testing to Determine Ampacity Derating Factors for Fire Protected Cables"

Requirements: Perform post-test check for instrumentation.

Description of Anomaly: Thermocouples attached to channels ~~5~~ 2 CLR 6-24-93, 29, and 30 indicated open.

Comments and Recommendation: Accept the data taken using these thermocouples and do not perform post-test check.

Disposition: CUSTOMER CONCURS WITH RECOMMENDATION.

Project Engineer C L Rutledge /Date 6-24-93 QA/QC Supervisor D. M. Ayley /Date 6-24-93

Engg Svcs Supv [illegible] /Date 6/24/93 Customer Approval [illegible] /Date 6/24/93

ATTACHMENT M

COMPUTER PROGRAMS

THIS PROGRAM WAS USED TO ACQUIRE DATA FOR THE SINGLE PHASE, 3 CONDUCTOR, 6 AWG TEST IN 1" CONUDIT

```
' THIS PROGRAM IS DESIGNED TO TALK TO A FLUKE 2280 AND TO COLLECT DATA FOR
' PROCESSING.  JOB NUMBER 93-0501S01. MARCH 1993. FRANK A. DEVINEY

CLS
WIDTH LPRINT 132
DIM tw(100), t(80)

INPUT "ENTER SAMPLE NUMBER SUFFIX 93-0501 ", SN$
INPUT "ENTER STARTUP TEMPERATURE IN DEGREES C ", TS   'get initial temp
INPUT "ENTER FILE NUMBER TO SAVE DATA ", df$
FOR i = 1 TO 100                                      'set array
 tw(i) = TS
NEXT i

hdr:
LPRINT CHR$(15)                                       '17 chara per inch
GOSUB PRTHDR
lines = 1

OPEN "COM1:4800,N,8,1,CS0,DS0,CD0,RS" FOR RANDOM AS #1 LEN = 4096    'SERIAL
SETUP
OPEN df$ FOR OUTPUT AS #2
PRINT #1, CHR$(24)                                    'ctrl-x to fluke
a$ = INPUT$(1, #1)
CLOSE #1

scan:
LOCATE 1, 1
PRINT "SAVING DATA TO FILE ", df$

WAIT1:                                                 '1 scan per minute
  IF INKEY$ = "Q" THEN GOTO DONE                       'quit exit to DOS
  LOCATE 1, 70
  PRINT TIME$                                          'dos date&time
  sec$ = RIGHT$(TIME$, 2)
  IF sec$ <> "00" THEN GOTO WAIT1
CLS
LOCATE 2, 2
OPEN "COM1:4800,N,8,1,CD0,DS0,CS0,RS" FOR RANDOM AS #1                'SERIAL
SETUP
PRINT #1, "!#2,!"                                     'send scan command

GET1:
  LINE INPUT #1, m$
  IF (MID$(m$, 4, 4) = "STOP") THEN GOTO noscan
  IF (MID$(m$, 4, 1) <> "C") THEN GOTO line2:
  n = VAL(MID$(m$, 7, 2))
GOTO line3

line2:
 IF (MID$(m$, 2, 1) <> "C") THEN GOTO skip:
```

```
   n = VAL(MID$(m$, 4, 4))                                  'channel number

line3:
   t(n) = VAL(MID$(m$, 9, 10))                              'value

skip:
  PRINT m$;                                                 'to monitor
  PRINT #2, m$                                              'save
  IF (MID$(m$, 4, 4) <> "END ") THEN GOTO GET1

  t$ = MID$(m$, 34, 12)                                      'fluke time
  tav1 = (t(9) + t(3) + t(6)) / 3                           'average of 3 temps
  tav2 = (t(1) + t(4) + t(7)) / 3
  tav3 = (t(2) + t(5) + t(8)) / 3
  tw(61) = (tav1 + tav2 + tav3) / 3
  Taav = (t(40) + t(41) + t(42)) / 3
  Tmax = t(1)                                              'find hottest midpoin
  temperature
  IF t(4) > Tmax THEN Tmax = t(4)                         'else tm1 = t(1)
  IF t(7) > Tmax THEN Tmax = t(7)                          'else tm2 = t(1)
  Tf = 0
  IF ABS(90 - Tmax) > 1.1 THEN Tf = 1
  IF (ABS(40 - t(40)) OR ABS(40 - t(41)) OR ABS(40 - t(42))) > 2 THEN Tf = 1
  IF ABS(tav2 - tav1) > 4 THEN Tf = 1
  IF ABS(tav2 - tav3) > 4 THEN Tf = 1
noscan:
CLOSE #1
CLOSE #2

FOR i = 1 TO 60                                             'shift all back 1
   tw(i) = tw(i + 1)                                        'in 60 minute array
NEXT i

sumi = 0
sumisq = 0
sumtw = 0
sumtwi = 0


FOR i = 1 TO 60                                              'computes for
sumi = sumi + i                                              'linear
sumisq = sumisq + i * i                                      'regression
sumtw = sumtw + tw(i)
sumtwi = sumtwi + i * tw(i)
NEXT i

m = (sumtwi - sumi * sumtw / 60) / (sumisq - sumi * sumi / 60)
m = 60 * m
IF ABS(m) >= .2 THEN Tf = 1


It = 40 * t(73)
In = It * SQR(((90 - 40) * (234.5 + Tmax)) / ((Tmax - Taav) * (234.5 + 90)))
```

```
LPRINT CHR$(27) + CHR$(48);
LPRINT USING "##.# "; t(9); t(3); t(6);
LPRINT "  ";
LPRINT USING "##.# "; t(1); t(4); t(7);
LPRINT "  ";
LPRINT USING "##.# "; t(2); t(5); t(8);
LPRINT "  ";
LPRINT USING "##.#  "; tav1; tav2; tav3;
LPRINT USING "###.## "; tw(61); m;
LPRINT "  ";
LPRINT USING "##.# "; t(40); t(41); t(42); Taav;
LPRINT USING "####.##"; It;
IF (Tf <> 0) THEN GOTO notneq
LPRINT USING "####.##"; In;
GOTO dn1

notneq:
LPRINT "       ";
dn1:
LPRINT t$

lines = lines + 1
IF lines < 61 THEN GOTO nothdr                          'form feed
LPRINT
LPRINT
LPRINT
"COMMENTS_____________________________________________________________________
__ ___ ___________________________"
LPRINT
LPRINT "
_____________________________________________________________________________
__ ___ ___________________"
LPRINT
LPRINT "
_____________________________________________________________________________
__ ___ ___________________"
LPRINT
LPRINT "
_____________________________________________________________________________
__ ___ ___________________"
LPRINT
LPRINT
LPRINT "        Tested By _________________________ Date __________ Reviewed By
_________________________ Date _________"
LPRINT CHR$(12)
GOSUB PRTHDR
lines = 1

nothdr:
OPEN df$ FOR APPEND AS #2
GOTO scan

DONE:
OPEN "COM1:4800,N,8,1,CD0,CS0,DS0,RS" FOR RANDOM AS #1
```

```
PRINT #1, CHR$(25)
CLOSE #1
END
PRTHDR:
LPRINT CHR$(27) + CHR$(50);
LPRINT CHR$(27) + CHR$(71);                                'enhanced for head
LPRINT "   AMPACITY TEST.       JOB NUMBER 93-0501.     SAMPLE NUMBER 93-0501-";
SN$;
LPRINT "   DATA FILE "; df$;
LPRINT "                 "; DATE$
LPRINT
LPRINT "__POSITION 1__    __POSITION 2__    __POSITION 3__    POSITION AVERAGE
AVE AMBIENT TEMPERATURE        AMPS"
LPRINT "Trd1 Tbk1 Twh1   Trd2 Tbk2 Twh2   Trd3 Tbk3 Twh3   Tav1  Tav2  Tav3
Twave SLOPE   Tam1 Tam2 Tam3 Taav    It      I'     "; LPRINT "TIME"
LPRINT
LPRINT CHR$(27) + CHR$(72);                                'unenhance
RETURN
```

[3C6G.DOC]

THIS PROGRAM WAS USED TO ACQUIRE DATE FOR THE SINGLE PHASE, 3 CONDUCTOR, 750 MCM TEST IN 4" CONDUIT

```
' THIS PROGRAM IS DESIGNED TO TALK TO A FLUKE 2280 AND TO COLLECT DATA FOR
' PROCESSING.  JOB NUMBER 93-0501S01. MARCH 1993. FRANK A. DEVINEY

CLS
WIDTH LPRINT 132
DIM tw(100), t(80)

INPUT "ENTER SAMPLE NUMBER SUFFIX 93-0501 ", SN$
INPUT "ENTER STARTUP TEMPERATURE IN DEGREES C ", TS   'get initial temp
INPUT "ENTER FILE NUMBER TO SAVE DATA ", df$
FOR i = 1 TO 100                                      'set array
 tw(i) = TS
NEXT i

hdr:
LPRINT CHR$(15)                                       '17 chara per inch
GOSUB PRTHDR
lines = 1

OPEN "COM1:4800,N,8,1,CS0,DS0,CD0,RS" FOR RANDOM AS #1 LEN = 4096    'SERIAL
SETUP
OPEN df$ FOR OUTPUT AS #2
PRINT #1, CHR$(24)                                    'ctrl-x to fluke
a$ = INPUT$(1, #1)
CLOSE #1

scan:
LOCATE 1, 1
PRINT "SAVING DATA TO FILE ", df$

WAIT1:                                                '1 scan per minute
  IF INKEY$ = "Q" THEN GOTO DONE                      'quit exit to DOS
  LOCATE 1, 70
  PRINT TIME$                                         'dos date&time
  sec$ = RIGHT$(TIME$, 2)
  IF sec$ <> "00" THEN GOTO WAIT1
CLS
LOCATE 2, 2
OPEN "COM1:4800,N,8,1,CD0,DS0,CS0,RS" FOR RANDOM AS #1              'SERIAL
SETUP
PRINT #1, "!#4,!"                                     'send scan command

GET1:
  LINE INPUT #1, m$
  IF (MID$(m$, 4, 4) = "STOP") THEN GOTO noscan
  IF (MID$(m$, 4, 1) <> "C") THEN GOTO line2:
  n = VAL(MID$(m$, 7, 2))
GOTO line3

line2:
 IF (MID$(m$, 2, 1) <> "C") THEN GOTO skip:
```

```
   n = VAL(MID$(m$, 4, 4))                                  'channel number

line3:
   t(n) = VAL(MID$(m$, 9, 10))                              'value

skip:
  PRINT m$;                                                 'to monitor
  PRINT #2, m$                                              'save
  IF (MID$(m$, 4, 4) <> "END ") THEN GOTO GET1

  t$ = MID$(m$, 34, 12)                                      'fluke time
  tav1 = (t(20) + t(23) + t(26)) / 3                          'average of 3 temps
  tav2 = (t(21) + t(24) + t(27)) / 3
  tav3 = (t(22) + t(25) + t(28)) / 3
  tw(61) = (tav1 + tav2 + tav3) / 3
  taav = (t(40) + t(41) + t(42)) / 3
  tmax = t(1)                                              'find hottest midpoin
  temperature
  IF t(4) > tmax THEN tmax = t(4)                         'else tm1 = t(1)
  IF t(7) > tmax THEN tmax = t(7)                          'else tm2 = t(1)
  Tf = 0
  IF ABS(90 - tmax) > 1.1 THEN Tf = 1
  IF (ABS(40 - t(40)) OR ABS(40 - t(41)) OR ABS(40 - t(42))) > 2 THEN Tf = 1
  IF ABS(tav2 - tav1) > 4 THEN Tf = 1
  IF ABS(tav2 - tav3) > 4 THEN Tf = 1
noscan:
CLOSE #1
CLOSE #2

FOR i = 1 TO 60                                             'shift all back 1
   tw(i) = tw(i + 1)                                        'in 60 minute array
NEXT i

sumi = 0
sumisq = 0
sumtw = 0
sumtwi = 0


FOR i = 1 TO 60                                              'computes for
sumi = sumi + i                                              'linear
sumisq = sumisq + i * i                                      'regression
sumtw = sumtw + tw(i)
sumtwi = sumtwi + i * tw(i)
NEXT i

m = (sumtwi - sumi * sumtw / 60) / (sumisq - sumi * sumi / 60)
m = 60 * m
IF ABS(m) >= .2 THEN Tf = 1


It = 80 * (t(70) + t(71))
IF (tmax - taav) <= 0 THEN GOTO nxt2
Inor = It * SQR((50 * (234.5 + tmax)) / ((tmax - taav) * 324.5))
```

```
nxt2:
LPRINT CHR$(27) + CHR$(48);
LPRINT USING "##.# "; t(20); t(23); t(26);
LPRINT "  ";
LPRINT USING "##.# "; t(21); t(24); t(27);
LPRINT "  ";
LPRINT USING "##.# "; t(22); t(25); t(28);
LPRINT "  ";
LPRINT USING "##.#  "; tav1; tav2; tav3;
LPRINT USING "###.## "; tw(61); m;
LPRINT "  ";
LPRINT USING "##.# "; t(40); t(41); t(42); taav;
LPRINT USING "####.##"; It;
IF (Tf <> 0) THEN GOTO notneq
LPRINT USING "####.##"; Inor;
GOTO dn1

notneq:
LPRINT "       ";
dn1:
LPRINT t$

lines = lines + 1
IF lines < 61 THEN GOTO nothdr                          'form feed
LPRINT
LPRINT
LPRINT
"COMMENTS_____________________________________________________________________
_____________________________________"
LPRINT
LPRINT "
_____________________________________________________________________________
_____________________________"
LPRINT
LPRINT "
_____________________________________________________________________________
_____________________________"
LPRINT
LPRINT "
_____________________________________________________________________________
_____________________________"
LPRINT
LPRINT
LPRINT " .      Tested By _____________________________ Date _____________ Reviewed By
_____________________________ Date _____________"
LPRINT CHR$(12)
GOSUB PRTHDR
lines = 1

nothdr:
OPEN df$ FOR APPEND AS #2
GOTO scan

DONE:
```

```
OPEN "COM1:4800,N,8,1,CD0,CS0,DS0,RS" FOR RANDOM AS #1
PRINT #1, CHR$(25)
CLOSE #1
END
PRTHDR:
LPRINT CHR$(27) + CHR$(50);
LPRINT CHR$(27) + CHR$(71);                              'enhanced for head
LPRINT "   AMPACITY TEST.       JOB NUMBER 93-0501.     SAMPLE NUMBER 93-0501-";
SN$;
LPRINT "   DATA FILE "; df$;
LPRINT "                 "; DATE$
LPRINT
LPRINT "__POSITION 1__    __POSITION 2__    __POSITION 3__   POSITION AVERAGE
AVE           AMBIENT TEMPERATURE       AMPS"
LPRINT "Trd1 Tbk1 Twh1   Trd2 Tbk2 Twh2   Trd3 Tbk3 Twh3   Tav1  Tav2  Tav3
Twave  SLOPE   Tam1 Tam2 Tam3 Taav    It      I'     "; LPRINT "TIME"
LPRINT
LPRINT CHR$(27) + CHR$(72);                              'unenhance
RETURN
```

[750.DOC]

THIS PROGRAM WAS USED TO ACQUIRE DATA FOR THE SINGLE PHASE, 4 CONDUCTOR, 6 AWG, TEST IN 1" CONDUIT

```
' THIS PROGRAM IS DESIGNED TO TALK TO A FLUKE 2280 AND TO COLLECT DATA FOR
' PROCESSING.  AND IS INTENDED SPECIFICALLY FOR 4C 6AWG CABLE.
' JOB NUMBER 93-0501S01. MARCH 1993. FRANK A. DEVINEY

CLS
WIDTH LPRINT 132
DIM tw(100), t(80)

INPUT "ENTER SAMPLE NUMBER SUFFIX 93-0501 ", SN$
INPUT "ENTER STARTUP TEMPERATURE IN DEGREES C ", TS   'get initial temp
INPUT "ENTER FILE NUMBER TO SAVE DATA ", df$
FOR i = 1 TO 100                                      'set array
 tw(i) = TS
NEXT i

hdr:
LPRINT CHR$(15)                                       '17 chara per inch
GOSUB PRTHDR
lines = 1

OPEN "COM1:4800,N,8,1,CS0,DS0,CD0,RS" FOR RANDOM AS #1 LEN = 4096    'SERIAL
SETUP
OPEN df$ FOR OUTPUT AS #2
PRINT #1, CHR$(24)                                    'ctrl-x to fluke
A$ = INPUT$(1, #1)
CLOSE #1

scan:

WAIT1:                                                '1 scan per minute
  IF INKEY$ = "Q" THEN GOTO DONE                      'quit exit to DOS
  LOCATE 1, 70
  PRINT TIME$                                         'dos date&time
  sec$ = RIGHT$(TIME$, 2)
  IF sec$ <> "00" THEN GOTO WAIT1
CLS
LOCATE 2, 2
OPEN "COM1:4800,N,8,1,CD0,DS0,CS0,RS" FOR RANDOM AS #1              'SERIAL
SETUP
PRINT #1, "!#2,!"                                     'send scan command

GET1:
  LINE INPUT #1, M$
  IF (MID$(M$, 4, 4) = "STOP") THEN GOTO noscan
  IF (MID$(M$, 4, 1) <> "C") THEN GOTO line2:
  n1 = VAL(MID$(M$, 7, 2))
  N2 = VAL(MID$(M$, 18, 2))
GOTO line3

line2:
 IF (MID$(M$, 2, 1) <> "C") THEN GOTO skip:
```

```
   n1 = VAL(MID$(M$, 4, 4))                          'channel number
   N2 = VAL(MID$(M$, 15, 2))
line3:
   t(n1) = VAL(MID$(M$, 9, 10))                      'value

skip:
  PRINT M$;                                         'to monitor
  PRINT #2, M$                                      'save
  IF (MID$(M$, 4, 4) <> "END ") THEN GOTO GET1

  t$ = MID$(M$, 34, 12)                              'fluke time
  tav1 = (t(0) + t(1) + t(2) + t(4)) / 4             'average of 4 temps
  tav2 = (t(5) + t(6) + t(13) + t(8)) / 4
  tav3 = (t(9) + t(10) + t(11) + t(12)) / 4
  tw(61) = (tav1 + tav2 + tav3) / 3
  Taav = (t(40) + t(41) + t(42)) / 3
  Tmax = t(5)                                       'find hottest midpoin
  temperature
  IF t(6) > Tmax THEN Tmax = t(6)                  'else tm1 = t(1)
  IF t(13) > Tmax THEN Tmax = t(13)                  'else tm2 = t(1)
  IF t(8) > Tmax THEN Tmax = t(8)
  Tf = 0
  IF ABS(90 - Tmax) > 1.1 THEN Tf = 1
  IF (ABS(40 - t(40)) OR ABS(40 - t(41)) OR ABS(40 - t(42))) > 2 THEN Tf = 1
  IF ABS(tav2 - tav1) > 4 THEN Tf = 1
  IF ABS(tav2 - tav3) > 4 THEN Tf = 1
noscan:
CLOSE #1
CLOSE #2

FOR i = 1 TO 60                                     'shift all back 1
   tw(i) = tw(i + 1)                                'in 60 minute array
NEXT i

sumi = 0
sumisq = 0
sumtw = 0
sumtwi = 0


FOR i = 1 TO 60                                     'computes for
sumi = sumi + i                                     'linear
sumisq = sumisq + i * i                             'regression
sumtw = sumtw + tw(i)
sumtwi = sumtwi + i * tw(i)
NEXT i

M = (sumtwi - sumi * sumtw / 60) / (sumisq - sumi * sumi / 60)
M = 60 * M
IF ABS(M) >= .2 THEN Tf = 1


It = 40 * t(73)
In = It * SQR(((90 - 40) * (234.5 + Tmax)) / ((Tmax - Taav) * (234.5 + 90)))
```

```
LPRINT CHR$(27) + CHR$(48);
LPRINT USING "##.# "; t(0); t(1); t(2); t(4);
LPRINT " ";
LPRINT USING "##.# "; t(5); t(6); t(13); t(8);
LPRINT " ";
LPRINT USING "##.# "; t(9); t(10); t(11); t(12);
LPRINT " ";
LPRINT USING "##.# "; tav1; tav2; tav3;
LPRINT USING "##.## "; tw(61); M;
LPRINT USING "##.# "; t(40); t(41); t(42); Taav;
LPRINT USING "###.##"; It;
IF (Tf <> 0) THEN GOTO notneq
LPRINT USING "###.##"; In;
GOTO dn1

notneq:
LPRINT "      ";
dn1:
LPRINT LEFT$(t$, 7)

lines = lines + 1
IF lines < 61 THEN GOTO nothdr                          'form feed
LPRINT
LPRINT
LPRINT
"COMMENTS_____________________________________________________________________
_____________________________________"
LPRINT
LPRINT "
_____________________________________________________________________________
_____________________________"
LPRINT
LPRINT "
_____________________________________________________________________________
_____________________________"
LPRINT
LPRINT "
_____________________________________________________________________________
_____________________________"
LPRINT
LPRINT
LPRINT "        Tested By _____________________________ Date _____________ Reviewed By
_____________________________ Date _____________"
LPRINT CHR$(12)
GOSUB PRTHDR
lines = 1

nothdr:
OPEN df$ FOR APPEND AS #2
GOTO scan

DONE:
OPEN "COM1:4800,N,8,1,CD0,CS0,DS0,RS" FOR RANDOM AS #1
```

```
PRINT #1, CHR$(25)
CLOSE #1
END
PRTHDR:
LPRINT CHR$(27) + CHR$(50);
LPRINT CHR$(27) + CHR$(71);                                'enhanced for head
LPRINT "   AMPACITY TEST.       JOB NUMBER 93-0501.     SAMPLE NUMBER 93-0501-";
SN$;
LPRINT "   DATA FILE "; df$;
LPRINT "                "; DATE$
LPRINT
LPRINT "____POSITION 1_____  ____POSITION 2_____  ____POSITION 3_____   POSITION
AVG   AVG        AMBIENT TEMPERATURE     AMPS"
LPRINT "Trd1 Twh1 Tbk1 Tgr1  Trd2 Twh2 Tbk2 Tgr2  Trd3 Twh3 Tbk3 Tgr3  Tav1 Tav2
Tav3 Twave SLOPE Tam1 Tam2 Tam3 Taav   It    I'     "; LPRINT "TIME"
LPRINT
LPRINT CHR$(27) + CHR$(72);                                'unenhance
RETURN
```

[4C6G.DOC]

THIS PROGRAM WAS USED TO ACQUIRE DATA FOR THE SINGLE PHASE, 4 CONDUCTOR, 750 MCM, TEST IN 4" CONDUIT

```
' THIS PROGRAM IS DESIGNED TO TALK TO A FLUKE 2280 AND TO COLLECT DATA FOR
' PROCESSING AND IS DESIGNED SPECIFICALLY FOR 750 KCMIL CABLE.
' JOB NUMBER 93-0501S01. MARCH 1993. FRANK A. DEVINEY

CLS
WIDTH LPRINT 132
DIM tw(100), t(80)

INPUT "ENTER SAMPLE NUMBER SUFFIX 93-0501 ", SN$
INPUT "ENTER STARTUP TEMPERATURE IN DEGREES C ", TS   'get initial temp
INPUT "ENTER FILE NUMBER TO SAVE DATA ", df$
FOR i = 1 TO 100                                      'set array
 tw(i) = TS
NEXT i

hdr:
LPRINT CHR$(15)                                       '17 chara per inch
GOSUB PRTHDR
lines = 1

OPEN "COM1:4800,N,8,1,CS0,DS0,CD0,RS" FOR RANDOM AS #1 LEN = 4096    'SERIAL
SETUP
OPEN df$ FOR OUTPUT AS #2
PRINT #1, CHR$(24)                                    'ctrl-x to fluke
A$ = INPUT$(1, #1)
CLOSE #1

scan:
LOCATE 1, 1
PRINT "SAVING DATA TO FILE ", df$

WAIT1:                                                '1 scan per minute
  IF INKEY$ = "Q" THEN GOTO DONE                      'quit exit to DOS
  LOCATE 1, 70
  PRINT TIME$                                         'dos date&time
  sec$ = RIGHT$(TIME$, 2)
  IF sec$ <> "00" THEN GOTO WAIT1
CLS
LOCATE 2, 2
OPEN "COM1:4800,N,8,1,CD0,DS0,CS0,RS" FOR RANDOM AS #1              'SERIAL
SETUP
PRINT #1, "!#4,!"                                     'send scan command

GET1:
  LINE INPUT #1, m$
  IF (MID$(m$, 4, 4) = "STOP") THEN GOTO noscan
  IF (MID$(m$, 4, 1) <> "C") THEN GOTO line2:
  n = VAL(MID$(m$, 7, 2))
GOTO line3

line2:
```

```
 IF (MID$(m$, 2, 1) <> "C") THEN GOTO skip:
   n = VAL(MID$(m$, 4, 4))                          'channel number

line3:
   t(n) = VAL(MID$(m$, 9, 10))                      'value

skip:
  PRINT m$;                                         'to monitor
  PRINT #2, m$                                      'save
  IF (MID$(m$, 4, 4) <> "END ") THEN GOTO GET1

  t$ = MID$(m$, 36, 5)                               'fluke time
  tav1 = (t(20) + t(21) + t(22) + t(23)) / 4                 'average of 3
  temps
  tav2 = (t(24) + t(25) + t(26) + t(27)) / 4
  tav3 = (t(28) + t(29) + t(30) + t(31)) / 4
  tw(61) = (tav1 + tav2 + tav3) / 3
  taav = (t(40) + t(41) + t(42)) / 3
  tmax = t(24)                                     'find hottest midpoin
  temperature
  IF t(25) > tmax THEN tmax = t(25)                'else tm1 = t(1)
  IF t(26) > tmax THEN tmax = t(26)                 'else tm2 = t(1)
  IF t(27) > tmax THEN tmax = t(27)
  Tf = 0
  IF ABS(90 - tmax) > 1.1 THEN Tf = 1
  IF (ABS(40 - t(40)) OR ABS(40 - t(41)) OR ABS(40 - t(42))) > 2 THEN Tf = 1
  IF ABS(tav2 - tav1) > 4 THEN Tf = 1
  IF ABS(tav2 - tav3) > 4 THEN Tf = 1
  IF ABS(tav1 - tav3) > 4 THEN Tf = 1
noscan:
CLOSE #1
CLOSE #2

FOR i = 1 TO 60                                     'shift all back 1
   tw(i) = tw(i + 1)                                'in 60 minute array
NEXT i

sumi = 0
sumisq = 0
sumtw = 0
sumtwi = 0


FOR i = 1 TO 60                                      'computes for
sumi = sumi + i                                      'linear
sumisq = sumisq + i * i                              'regression
sumtw = sumtw + tw(i)
sumtwi = sumtwi + i * tw(i)
NEXT i

m = (sumtwi - sumi * sumtw / 60) / (sumisq - sumi * sumi / 60)
m = 60 * m
IF ABS(m) >= .2 THEN Tf = 1
It = 80 * (t(70) + t(71))
```

```
IF (tmax - taav) <= 0 THEN GOTO nxt2
Inor = It * SQR((50 * (234.5 + tmax)) / ((tmax - taav) * 324.5))
nxt2:
LPRINT CHR$(27) + CHR$(48);
LPRINT USING "##.# "; t(20); t(21); t(22); t(23);
LPRINT " ";
LPRINT USING "##.# "; t(24); t(25); t(26); t(27);
LPRINT " ";
LPRINT USING "##.# "; t(28); t(29); t(30); t(31);
LPRINT USING "##.# "; tav1; tav2; tav3;
LPRINT USING "##.## "; tw(61); m;
LPRINT USING "##.# "; t(40); t(41); t(42); taav;
LPRINT USING "####.##"; It;
IF (Tf = 1) THEN GOTO notneq
LPRINT USING "####.##"; Inor;
GOTO dn1

notneq:
LPRINT "       ";
dn1:
LPRINT " ";
LPRINT t$

lines = lines + 1
IF lines < 61 THEN GOTO nothdr                          'form feed
LPRINT
LPRINT
LPRINT
"COMMENTS_____________________________________________________________________
_____________________________________"
LPRINT
LPRINT "
_____________________________________________________________________________
_____________________"
LPRINT
LPRINT "
_____________________________________________________________________________
_____________________"
LPRINT
LPRINT "
_____________________________________________________________________________
_____________________"
LPRINT
LPRINT
LPRINT "        Tested By _____________________________ Date ___________ Reviewed By
_____________________________ Date _________"
LPRINT CHR$(12)
GOSUB PRTHDR
lines = 1

nothdr:
OPEN df$ FOR APPEND AS #2
GOTO scan
```

```
DONE:
OPEN "COM1:4800,N,8,1,CD0,CS0,DS0,RS" FOR RANDOM AS #1
PRINT #1, CHR$(25)
CLOSE #1
END
PRTHDR:
LPRINT CHR$(27) + CHR$(50);
LPRINT CHR$(27) + CHR$(71);                              'enhanced for head
LPRINT "   AMPACITY TEST.       JOB NUMBER 93-0501.     SAMPLE NUMBER 93-0501-";
SN$;
LPRINT "   DATA FILE "; df$;
LPRINT "                "; DATE$
LPRINT
LPRINT "___POSITION 1 ____    ____POSITION 2_____   ____POSITION 3_____  POSITION
AVG   AVG        AMBIENT TEMPERATURE      AMPS"
LPRINT "Trd1 Twh1 Tgr1 Tbk1  Trd2 Twh2 Tgr2 Tbk2  Trd3 Twh3 Tgr3 Tbk3 Tav1 Tav2
Tav3 Twave SLOPE Tam1 Tam2 Tam3 Taav    It     I'   "; LPRINT "TIME"
LPRINT
LPRINT CHR$(27) + CHR$(72);                              'unenhance
RETURN
```

[4X750.DOC]

THIS PROGRAM WAS USED TO ACQUIRE DATA FOR THE SINGLE PHASE, 24 CONDUCTOR, 6 AWG TEST IN 4" CONDUIT

```
' THIS PROGRAM IS DESIGNED TO TALK TO A FLUKE 2280 AND TO COLLECT DATA FOR
' PROCESSING.  AND IS INTENDED SPECIFICALLY FOR 4C 6AWG CABLE.
' JOB NUMBER 93-0501S01. MARCH 1993. FRANK A. DEVINEY

CLS
WIDTH LPRINT 132
DIM tw(100), t(0 TO 80)

INPUT "ENTER SAMPLE NUMBER SUFFIX 93-0501 ", SN$
INPUT "ENTER STARTUP TEMPERATURE IN DEGREES C ", TS   'get initial temp
INPUT "ENTER FILE NUMBER TO SAVE DATA ", df$
FOR i = 1 TO 100                                      'set array
 tw(i) = TS
NEXT i

hdr:
LPRINT CHR$(15)                                       '17 chara per inch
GOSUB PRTHDR
lines = 1

OPEN "COM1:4800,N,8,1,CS0,DS0,CD0,RS" FOR RANDOM AS #1 LEN = 4096    'SERIAL
SETUP
OPEN df$ FOR OUTPUT AS #2
PRINT #1, CHR$(24)                                    'ctrl-x to fluke
A$ = INPUT$(1, #1)
CLOSE #1

scan:

WAIT1:                                                 '1 scan per minute
  IF INKEY$ = "Q" THEN GOTO DONE                       'quit exit to DOS
  LOCATE 1, 70
  PRINT TIME$                                          'dos date&time
  sec$ = RIGHT$(TIME$, 2)
  IF sec$ <> "00" THEN GOTO WAIT1
CLS
LOCATE 2, 2
OPEN "COM1:4800,N,8,1,CD0,DS0,CS0,RS" FOR RANDOM AS #1              'SERIAL
SETUP
PRINT #1, "!#2,!"                                         'send scan command

get1:
  LINE INPUT #1, m$
  IF LEN(m$) < 14 THEN GOTO get1
  IF LEN(m$) <> 33 THEN GOTO nxt1
  m$ = RIGHT$(m$, 31)
nxt1:
  IF (MID$(m$, 4, 4) = "STOP") THEN GOTO noscan
  IF MID$(m$, 2, 1) <> "C" THEN GOTO skip:
  n1 = VAL(MID$(m$, 5, 2))
  n2 = VAL(MID$(m$, 22, 2))
```

```
  t(n1) = VAL(MID$(m$, 9, 10))                          'value

IF n1 = 73 THEN GOTO skip
  t(n2) = VAL(MID$(m$, 24, 10))

skip:
  PRINT m$;                                             'to monitor
  PRINT #2, m$                                          'save
  IF (MID$(m$, 4, 4) <> "END ") THEN GOTO get1

  t$ = MID$(m$, 34, 12)                                 'fluke time
  tav1 = (t(0) + t(1) + t(2) + t(3) + t(4) + t(5) + t(6) + t(7)) / 8
  'average of 8 temps
  tav2 = (t(8) + t(9) + t(10) + t(11) + t(20) + t(21) + t(22) + t(23)) / 8
  tav3 = (t(24) + t(25) + t(26) + t(27) + t(28) + t(29) + t(30) + t(31)) / 8
  tw(61) = (tav1 + tav2 + tav3) / 3
  Taav = (t(40) + t(41) + t(42)) / 3

  t1mx = t(0)                                          'find highest temperature for
location 1
  IF t(1) > t1mx THEN t1mx = t(1)
  IF t(2) > t1mx THEN t1mx = t(2)
  IF t(3) > t1mx THEN t1mx = t(3)
  IF t(4) > t1mx THEN t1mx = t(4)
  IF t(5) > t1mx THEN t1mx = t(5)
  IF t(6) > t1mx THEN t1mx = t(6)
  IF t(7) > t1mx THEN t1mx = t(7)

  t1mn = t(0)                                          'find lowest temperature for
location 1
  IF t(1) < t1mn THEN t1mn = t(1)
  IF t(2) < t1mn THEN t1mn = t(2)
  IF t(3) < t1mn THEN t1mn = t(3)
  IF t(4) < t1mn THEN t1mn = t(4)
  IF t(5) < t1mn THEN t1mn = t(5)
  IF t(6) < t1mn THEN t1mn = t(6)
  IF t(7) < t1mn THEN t1mn = t(7)

  t2mx = t(8)                                          'find highest temperature for
location 2
  IF t(9) > t2mx THEN t2mx = t(9)
  IF t(10) > t2mx THEN t2mx = t(10)
  IF t(11) > t2mx THEN t2mx = t(11)
  IF t(20) > t2mx THEN t2mx = t(20)
  IF t(21) > t2mx THEN t2mx = t(21)
  IF t(22) > t2mx THEN t2mx = t(22)
  IF t(23) > t2mx THEN t2mx = t(23)

  t2mn = t(8)                                          'find lowest temperature for
location 2
  IF t(9) < t2mn THEN t2mn = t(9)
  IF t(10) < t2mn THEN t2mn = t(10)
  IF t(11) < t2mn THEN t2mn = t(11)
  IF t(20) < t2mn THEN t2mn = t(20)
```

```
  IF t(21) < t2mn THEN t2mn = t(21)
  IF t(22) < t2mn THEN t2mn = t(22)
  IF t(23) < t2mn THEN t2mn = t(23)

  t3mx = t(24)                                        'find highest temperature for
location 3
  IF t(25) > t3mx THEN t3mx = t(25)
  IF t(26) > t3mx THEN t3mx = t(26)
  IF t(27) > t3mx THEN t3mx = t(27)
  IF t(28) > t3mx THEN t3mx = t(28)
  IF t(29) > t3mx THEN t3mx = t(29)
  IF t(30) > t3mx THEN t3mx = t(30)
  IF t(31) > t3mx THEN t3mx = t(31)

  t3mn = t(24)                                        'find lowest temperature for
location 3
  IF t(25) < t3mn THEN t3mn = t(25)
  IF t(26) < t3mn THEN t3mn = t(26)
  IF t(27) < t3mn THEN t3mn = t(27)
  IF t(28) < t3mn THEN t3mn = t(28)
  IF t(29) < t3mn THEN t3mn = t(29)
  IF t(30) < t3mn THEN t3mn = t(30)
  IF t(31) < t3mn THEN t3mn = t(31)


  Tf = 0
  IF ABS(90 - t2mx) > 1.1 THEN Tf = 1
  IF (ABS(40 - t(40)) OR ABS(40 - t(41)) OR ABS(40 - t(42))) > 2 THEN Tf = 1

noscan:
CLOSE #1
CLOSE #2

FOR i = 1 TO 60                                       'shift all back 1
   tw(i) = tw(i + 1)                                  'in 60 minute array
NEXT i

sumi = 0
sumisq = 0
sumtw = 0
sumtwi = 0


FOR i = 1 TO 60                                       'computes for
sumi = sumi + i                                       'linear
sumisq = sumisq + i * i                               'regression
sumtw = sumtw + tw(i)
sumtwi = sumtwi + i * tw(i)
NEXT i

m = (sumtwi - sumi * sumtw / 60) / (sumisq - sumi * sumi / 60)
m = 60 * m
IF ABS(m) >= .2 THEN Tf = 1
```

```
It = 40 * t(73)
In = It * SQR(((90 - 40) * (234.5 + t2mx)) / ((t2mx - Taav) * (234.5 + 90)))

LPRINT CHR$(27) + CHR$(48);
LPRINT USING "##.#  "; t1mx; t1mn;
LPRINT " ";
LPRINT USING "##.#  "; t2mx; t2mn;
LPRINT " ";
LPRINT USING "##.#  "; t3mx; t3mn;
LPRINT " ";
LPRINT USING "##.##  "; tav1; tav2; tav3;
LPRINT " ";
LPRINT USING "##.##  "; tw(61); m;
LPRINT USING "##.# "; t(40); t(41); t(42); Taav;
LPRINT USING " ###.##"; It;
IF (Tf <> 0) THEN GOTO notneq
LPRINT USING "###.##"; In;
GOTO dn1

notneq:
LPRINT "      ";
dn1:
LPRINT LEFT$(t$, 7)

lines = lines + 1
IF lines < 61 THEN GOTO nothdr                          'form feed
LPRINT
LPRINT
LPRINT
"COMMENTS_____________________________________________________________________
_____________________________ " LPRINT
LPRINT "
_____________________________________________________________________________
_____________________" LPRINT
LPRINT "
_____________________________________________________________________________
_____________________" LPRINT
LPRINT "
_____________________________________________________________________________
_____________________" LPRINT
LPRINT
LPRINT "        Tested By _________________________ Date __________ Reviewed By
_________________________ Date _________" LPRINT CHR$(12)
GOSUB PRTHDR
lines = 1

nothdr:
OPEN df$ FOR APPEND AS #2
GOTO scan

DONE:
OPEN "COM1:4800,N,8,1,CD0,CS0,DS0,RS" FOR RANDOM AS #1
PRINT #1, CHR$(25)
```

```
CLOSE #1
END
PRTHDR:
LPRINT CHR$(27) + CHR$(50);
LPRINT CHR$(27) + CHR$(71);                                'enhanced for head
LPRINT "   AMPACITY TEST.       JOB NUMBER 93-0501.     SAMPLE NUMBER 93-0501-";
SN$;
LPRINT "   DATA FILE "; df$;
LPRINT "          "; DATE$
LPRINT
LPRINT "POSITION 1   POSITION 2   POSITION 3   _POSITION AVERAGES_    AVG
AMBIENT TEMPERATURE AMPS"
LPRINT "T1mx  T1mn   T2mx  T2mn   T3mx  T3mn   T1avg  T2avg  T3avg   Twave  SLOPE
Tam1 Tam2 Tam3 Taav    It I'     "; LPRINT "TIME"
LPRINT
LPRINT CHR$(27) + CHR$(72);                                'unenhance
RETURN
```

[8C6G.DOC]

THIS PROGRAM WAS USED TO ACQUIRE DATA FOR THE THREE PHASE, 3 CONDUCTOR, 6 AWG TEST IN 1" CONDUIT

```
' THIS PROGRAM IS DESIGNED TO TALK TO A FLUKE 2280 AND TO COLLECT DATA FOR
' PROCESSING.  AND IS INTENDED SPECIFICALLY FOR 3C 6AWG CABLE IN A 3 PHASE
' CIRCUIT.
' JOB NUMBER 93-0501S01. MAY 1993. FRANK A. DEVINEY

CLS
WIDTH LPRINT 132
DIM tw(100), t(0 TO 80)

INPUT "ENTER SAMPLE NUMBER SUFFIX 93-0501 ", SN$
INPUT "ENTER STARTUP TEMPERATURE IN DEGREES C ", TS   'get initial temp
INPUT "ENTER FILE NUMBER TO SAVE DATA ", df$
FOR i = 1 TO 100                                      'set array
 tw(i) = TS
NEXT i

hdr:
LPRINT CHR$(15)                                       '17 chara per inch
GOSUB PRTHDR
lines = 1

OPEN "COM1:4800,N,8,1,CS0,DS0,CD0,RS" FOR RANDOM AS #1 LEN = 4096    'SERIAL
SETUP
OPEN df$ FOR OUTPUT AS #2
PRINT #1, CHR$(24)                                    'ctrl-x to fluke
A$ = INPUT$(1, #1)
CLOSE #1

scan:

WAIT1:                                                 '1 scan per minute
  IF INKEY$ = "Q" THEN GOTO DONE                       'quit exit to DOS
  LOCATE 1, 70
  PRINT TIME$                                          'dos date&time
  sec$ = RIGHT$(TIME$, 2)
  IF sec$ <> "00" THEN GOTO WAIT1
CLS
LOCATE 2, 2
OPEN "COM1:4800,N,8,1,CD0,DS0,CS0,RS" FOR RANDOM AS #1               'SERIAL
SETUP
PRINT #1, "!#2,!"                                          'send scan command

get1:
  LINE INPUT #1, m$
  IF LEN(m$) < 14 THEN GOTO get1
  IF LEN(m$) <> 33 THEN GOTO nxt1
  m$ = RIGHT$(m$, 31)
nxt1:
  IF (MID$(m$, 4, 4) = "STOP") THEN GOTO noscan
  IF MID$(m$, 2, 1) <> "C" THEN GOTO skip:
  n1 = VAL(MID$(m$, 5, 2))
```

```
  n2 = VAL(MID$(m$, 22, 2))
  t(n1) = VAL(MID$(m$, 9, 10))                          'value

IF n1 = 73 THEN GOTO skip
  t(n2) = VAL(MID$(m$, 24, 10))

skip:
  PRINT m$;                                             'to monitor
  PRINT #2, m$                                          'save
  IF (MID$(m$, 4, 4) <> "END ") THEN GOTO get1

  t$ = MID$(m$, 34, 12)                                  'fluke time
  tav1 = (t(5) + t(6) + t(7)) / 3                 'average of 3 temps
  tav2 = (t(21) + t(22) + t(23)) / 3
  tav3 = (t(29) + t(30) + t(31)) / 3
  tw(61) = (tav1 + tav2 + tav3) / 3
  Taav = (t(40) + t(41) + t(42)) / 3

  Tf = 0
  IF ABS(90 - t(23)) > 1.1 THEN Tf = 1
  IF ((ABS(40 - t(40)) > 2) OR (ABS(40 - t(41)) > 2) OR (ABS(40 - t(42)) > 2))
  THEN Tf = 1

noscan:
CLOSE #1
CLOSE #2

FOR i = 1 TO 60                                         'shift all back 1
   tw(i) = tw(i + 1)                                    'in 60 minute array
NEXT i

sumi = 0
sumisq = 0
sumtw = 0
sumtwi = 0

FOR i = 1 TO 60                                                 'computes for
sumi = sumi + i                                                 'linear
sumisq = sumisq + i * i                                         'regression
sumtw = sumtw + tw(i)
sumtwi = sumtwi + i * tw(i)
NEXT i

m = (sumtwi - sumi * sumtw / 60) / (sumisq - sumi * sumi / 60)
m = 60 * m                                                       'slope
IF ABS(m) >= .2 THEN Tf = 1

Tset = Taav + 50
Test = 10 * (tw(60) - tw(54)) + t(23)

Ib = 40 * t(73)
Iw = 40 * t(72)
Ir = 40 * t(71)
```

```
Iave = SQR((Ib * Ib + Iw * Iw + Ir * Ir) / 3)

Ix = .01 * Ib

Tg = 0
IF ((ABS(Ib - Ir) > Ix) OR (ABS(Ib - Iw) > Ix)) THEN Tg = 1

IF (t(23) - Taav) <= 0 THEN GOTO notpos
x = 50 * (234.5 + t(23))
y = 324.5 * (t(23) - Taav)
In = Iave * SQR(x / y)
notpos:
Iest = Ib + .2 * (Tset - Test)

LPRINT CHR$(27) + CHR$(48);
LPRINT USING "##.# "; t(7); t(6); t(5);
LPRINT USING "##.# "; t(23); t(21); t(22);
LPRINT USING "##.# "; t(31); t(30); t(29);
LPRINT USING "##.## "; tav1; tav2; tav3;
LPRINT USING "##.##  "; tw(61); m;
LPRINT USING "##.# "; t(40); t(41); t(42); Taav;
LPRINT USING "##.## "; Ib; Iw; Ir;
IF (Tf = 1) THEN GOTO notneq
LPRINT USING "##.##"; In;
IF (Tg = 1) THEN GOTO dn0
LPRINT " ";
GOTO dn1

notneq:
LPRINT USING "##.##"; Iest;
IF (Tg = 1) THEN GOTO dn0
LPRINT "*";
GOTO dn1
dn0:
LPRINT "#";
dn1:
LPRINT LEFT$(t$, 7)

lines = lines + 1
IF lines < 61 THEN GOTO nothdr                          'form feed
LPRINT
LPRINT
LPRINT
"COMMENTS_____________________________________________________________________
_____________________________"
LPRINT
LPRINT "
_____________________________________________________________________________
_____________________"
LPRINT
LPRINT "
_____________________________________________________________________________
_____________________"
LPRINT
```

```
LPRINT "
_____________________________________________________________________________
_____________________"
LPRINT
LPRINT
LPRINT "        Tested By _________________________ Date __________ Reviewed By
_________________________ Date _________"
LPRINT CHR$(12)
GOSUB PRTHDR
lines = 1

nothdr:
OPEN df$ FOR APPEND AS #2
GOTO scan

DONE:
OPEN "COM1:4800,N,8,1,CD0,CS0,DS0,RS" FOR RANDOM AS #1
PRINT #1, CHR$(25)
CLOSE #1
END
PRTHDR:
LPRINT CHR$(27) + CHR$(50);
LPRINT CHR$(27) + CHR$(71);                              'enhanced for head
LPRINT "   AMPACITY TEST.       JOB NUMBER 93-0501.     SAMPLE NUMBER 93-0501-";
SN$;
LPRINT "   DATA FILE "; df$;
LPRINT "          "; DATE$
LPRINT
LPRINT "  POSITION 1     POSITION 2     POSITION 3   POSITION AVERAGE   AVG
AMBIENT TEMPERATURE          AMPERES"
LPRINT " Tb   Tw   Tr   Tb   Tw   Tr   Tb   Tw   Tr  T1av  T2av  T3av  Twave
SLOPE  Tam1 Tam2 Tam3 Taav   Ib    Iw    Ir    I'   "; LPRINT "  TIME"
LPRINT
LPRINT CHR$(27) + CHR$(72);                              'unenhance
RETURN

[3P3C6G.DOC]
```

THIS PROGRAM WAS USED TO ACQUIRE DATA FOR THE THREE PHASE, 3 CONDUCTOR, 6 AWG TEST IN 4" CONDUIT

```
' THIS PROGRAM IS DESIGNED TO TALK TO A FLUKE 2280 AND TO COLLECT DATA FOR
' PROCESSING.  AND IS INTENDED SPECIFICALLY FOR 3C 6AWG CABLE IN A 3 PHASE
' CIRCUIT.
' JOB NUMBER 93-0501S01. MAY 1993. FRANK A. DEVINEY

CLS
WIDTH LPRINT 132
DIM tw(100), t(0 TO 80)

INPUT "ENTER SAMPLE NUMBER SUFFIX 93-0501 ", SN$
INPUT "ENTER STARTUP TEMPERATURE IN DEGREES C ", TS   'get initial temp
INPUT "ENTER FILE NUMBER TO SAVE DATA ", df$
FOR i = 1 TO 100                                      'set array
 tw(i) = TS
NEXT i

hdr:
LPRINT CHR$(15)                                       '17 chara per inch
GOSUB PRTHDR
lines = 1

OPEN "COM1:4800,N,8,1,CS0,DS0,CD0,RS" FOR RANDOM AS #1 LEN = 4096    'SERIAL
SETUP
OPEN df$ FOR OUTPUT AS #2
PRINT #1, CHR$(24)                                    'ctrl-x to fluke
A$ = INPUT$(1, #1)
CLOSE #1

scan:

WAIT1:                                                 '1 scan per minute
  IF INKEY$ = "Q" THEN GOTO DONE                       'quit exit to DOS
  LOCATE 1, 70
  PRINT TIME$                                          'dos date&time
  sec$ = RIGHT$(TIME$, 2)
  IF sec$ <> "00" THEN GOTO WAIT1
CLS
LOCATE 2, 2
OPEN "COM1:4800,N,8,1,CD0,DS0,CS0,RS" FOR RANDOM AS #1               'SERIAL
SETUP
PRINT #1, "!#2,!"                                          'send scan command

get1:
  LINE INPUT #1, m$
  IF LEN(m$) < 14 THEN GOTO get1
  IF LEN(m$) <> 33 THEN GOTO nxt1
  m$ = RIGHT$(m$, 31)
nxt1:
  IF (MID$(m$, 4, 4) = "STOP") THEN GOTO noscan
  IF MID$(m$, 2, 1) <> "C" THEN GOTO skip:
```

```
  n1 = VAL(MID$(m$, 5, 2))
  n2 = VAL(MID$(m$, 22, 2))
  t(n1) = VAL(MID$(m$, 9, 10))                          'value

IF n1 = 73 THEN GOTO skip
  t(n2) = VAL(MID$(m$, 24, 10))

skip:
  PRINT m$;                                             'to monitor
  PRINT #2, m$                                          'save
  IF (MID$(m$, 4, 4) <> "END ") THEN GOTO get1

  t$ = MID$(m$, 34, 12)                                  'fluke time
  tav1 = (t(0) + t(1) + t(2) + t(3) + t(4) + t(5) + t(6) + t(7)) / 8
  'average of 8 temps
  tav2 = (t(8) + t(9) + t(10) + t(11) + t(20) + t(21) + t(22) + t(23)) / 8
  tav3 = (t(24) + t(25) + t(26) + t(27) + t(28) + t(29) + t(30) + t(31)) / 8
  tw(61) = (tav1 + tav2 + tav3) / 3
  Taav = (t(40) + t(41) + t(42)) / 3

  t1mx = t(0)                                          'find highest temperature for
location 1
  IF t(1) > t1mx THEN t1mx = t(1)
  IF t(2) > t1mx THEN t1mx = t(2)
  IF t(3) > t1mx THEN t1mx = t(3)
  IF t(4) > t1mx THEN t1mx = t(4)
  IF t(5) > t1mx THEN t1mx = t(5)
  IF t(6) > t1mx THEN t1mx = t(6)
  IF t(7) > t1mx THEN t1mx = t(7)

  t1mn = t(0)                                          'find lowest temperature for
location 1
  IF t(1) < t1mn THEN t1mn = t(1)
  IF t(2) < t1mn THEN t1mn = t(2)
  IF t(3) < t1mn THEN t1mn = t(3)
  IF t(4) < t1mn THEN t1mn = t(4)
  IF t(5) < t1mn THEN t1mn = t(5)
  IF t(6) < t1mn THEN t1mn = t(6)
  IF t(7) < t1mn THEN t1mn = t(7)

  t2mx = t(8)                                          'find highest temperature for
location 2
  IF t(9) > t2mx THEN t2mx = t(9)
  IF t(10) > t2mx THEN t2mx = t(10)
  IF t(11) > t2mx THEN t2mx = t(11)
  IF t(20) > t2mx THEN t2mx = t(20)
  IF t(21) > t2mx THEN t2mx = t(21)
  IF t(22) > t2mx THEN t2mx = t(22)
  IF t(23) > t2mx THEN t2mx = t(23)

  t2mn = t(8)                                          'find lowest temperature for
location 2
  IF t(9) < t2mn THEN t2mn = t(9)
  IF t(10) < t2mn THEN t2mn = t(10)
```

```
  IF t(11) < t2mn THEN t2mn = t(11)
  IF t(20) < t2mn THEN t2mn = t(20)
  IF t(21) < t2mn THEN t2mn = t(21)
  IF t(22) < t2mn THEN t2mn = t(22)
  IF t(23) < t2mn THEN t2mn = t(23)

  t3mx = t(24)                                    'find highest temperature for
location 3
  IF t(25) > t3mx THEN t3mx = t(25)
  IF t(26) > t3mx THEN t3mx = t(26)
  IF t(27) > t3mx THEN t3mx = t(27)
  IF t(28) > t3mx THEN t3mx = t(28)
  IF t(29) > t3mx THEN t3mx = t(29)
  IF t(30) > t3mx THEN t3mx = t(30)
  IF t(31) > t3mx THEN t3mx = t(31)

  t3mn = t(24)                                    'find lowest temperature for
location 3
  IF t(25) < t3mn THEN t3mn = t(25)
  IF t(26) < t3mn THEN t3mn = t(26)
  IF t(27) < t3mn THEN t3mn = t(27)
  IF t(28) < t3mn THEN t3mn = t(28)
  IF t(29) < t3mn THEN t3mn = t(29)
  IF t(30) < t3mn THEN t3mn = t(30)
  IF t(31) < t3mn THEN t3mn = t(31)


  Tf = 0
  IF ABS(90 - t2mx) > 1.1 THEN Tf = 1
  IF ((ABS(40 - t(40)) > 2) OR (ABS(40 - t(41)) > 2) OR (ABS(40 - t(42)) > 2))
  THEN Tf = 1

noscan:
CLOSE #1
CLOSE #2

FOR i = 1 TO 60                                     'shift all back 1
   tw(i) = tw(i + 1)                                'in 60 minute array
NEXT i

sumi = 0
sumisq = 0
sumtw = 0
sumtwi = 0


FOR i = 1 TO 60                                         'computes for
sumi = sumi + i                                         'linear
sumisq = sumisq + i * i                                 'regression
sumtw = sumtw + tw(i)
sumtwi = sumtwi + i * tw(i)
NEXT i

m = (sumtwi - sumi * sumtw / 60) / (sumisq - sumi * sumi / 60)
```

```
m = 60 * m                                                    'slope
IF ABS(m) >= .2 THEN Tf = 1

Tset = Taav + 50
Test = 10 * (tw(60) - tw(54)) + t2mx

Ib = 40 * t(73)
Iw = 40 * t(72)
Ir = 40 * t(71)

Iave = SQR((Ib * Ib + Iw * Iw + Ir * Ir) / 3)

Ix = .5

Tg = 0
IF ((ABS(Ib - Ir) > Ix) OR (ABS(Ib - Iw) > Ix)) THEN Tg = 1

IF (t2mx - Taav) <= 0 THEN GOTO notpos
In = Iave * SQR(((90 - 40) * (234.5 + t2mx)) / ((t2mx - Taav) * (234.5 + 90)))
notpos:
Iest = Ib + .2 * (Tset - Test)

LPRINT CHR$(27) + CHR$(48);
LPRINT USING "##.#  "; t1mx; t1mn;
LPRINT " ";
LPRINT USING "##.#  "; t2mx; t2mn;
LPRINT " ";
LPRINT USING "##.#  "; t3mx; t3mn;
LPRINT " ";
LPRINT USING "##.##  "; tav1; tav2; tav3;
LPRINT " ";
LPRINT USING "##.##  "; tw(61); m;
LPRINT USING "##.# "; t(40); t(41); t(42); Taav;
LPRINT USING "###.##"; Ib; Iw; Ir;
IF (Tf = 1) THEN GOTO notneq
LPRINT USING "###.##"; In;
IF (Tg = 1) THEN GOTO dn0
LPRINT " ";
GOTO dn1

notneq:
LPRINT USING "###.##"; Iest;
IF (Tg = 1) THEN GOTO dn0
LPRINT "*";
GOTO dn1
dn0:
LPRINT "#";
dn1:
LPRINT LEFT$(t$, 7)

lines = lines + 1
IF lines < 61 THEN GOTO nothdr                              'form feed
LPRINT
LPRINT
```

```
LPRINT
"COMMENTS_____________________________________________________________________
_____________________________"
LPRINT
LPRINT "
_____________________________________________________________________________
_____________________"
LPRINT
LPRINT "
_____________________________________________________________________________
_____________________"
LPRINT
LPRINT "
_____________________________________________________________________________
_____________________"
LPRINT
LPRINT
LPRINT "        Tested By _________________________ Date __________ Reviewed By
_________________________ Date _________"
LPRINT CHR$(12)
GOSUB PRTHDR
lines = 1

nothdr:
OPEN df$ FOR APPEND AS #2
GOTO scan

DONE:
OPEN "COM1:4800,N,8,1,CD0,CS0,DS0,RS" FOR RANDOM AS #1
PRINT #1, CHR$(25)
CLOSE #1
END
PRTHDR:
LPRINT CHR$(27) + CHR$(50);
LPRINT CHR$(27) + CHR$(71);                              'enhanced for head
LPRINT "   AMPACITY TEST.       JOB NUMBER 93-0501.     SAMPLE NUMBER 93-0501-";
SN$;
LPRINT "   DATA FILE "; df$;
LPRINT "          "; DATE$
LPRINT
LPRINT "POSITION 1   POSITION 2   POSITION 3   _POSITION AVERAGES_    AVG
AMBIENT TEMPERATURE          AMPERES"
LPRINT "T1mx  T1mn   T2mx  T2mn   T3mx  T3mn   T1avg  T2avg  T3avg   Twave  SLOPE
Tam1 Tam2 Tam3 Taav   Ib    Iw    Ir    I'    "; LPRINT " TIME"
LPRINT
LPRINT CHR$(27) + CHR$(72);                              'unenhance
RETURN
```

[3P6G.DOC]

ATTACHMENT N

INSTRUMENT LOG

TVA 6479A (P PROD 10-88)

CENTRAL LABORATORIES SERVICES DEPARTMENT

REPORT OF CALIBRATION

TENNESSEE VALLEY AUTHORITY
Chattanooga, Tennessee

ID NO. 890593

Instrument	Manufacturer	Model
Data Acquisition System	Fluke	2286A

Last Calibrated	Date Next Calibration	Calibration Interval	Date This Calibration
Initial Cal	08-23-93	6 months	02-23-93

Received From	Disposition to	Instruction Number
EQ Lab - CLSD	EQ Lab - CLSD	322.1-1

Instrument Accuracy

See attached sheets for instrument accuracies

Standards Used

903849, 890647, 890635, 891602, 906014, 905463

Status

As-Found	Within Tolerance	☐	Out of-Tolerance	☐	Not Required	☑	See Remarks	☐
As-Left	Within Tolerance	☑	Test Incomplete	☐	Not Required	☐	See Remarks	☐

REMARKS/DATA

See attached sheets for data on individual channels.
Used for Job Number 93-0501. Cable Ampacity Testing in 1" and 4" conduits.

THIS INSTRUMENT WAS TESTED AND CALIBRATED TO PRESCRIBED TEST PROCEDURES AND THE CONDITION OF THE INSTRUMENT IS INDICATED.

Calibrated By: C L Rutledge

Approved By: [illegible]

Copies to:

1207D

CENTRAL LABORATORIES SERVICES DEPARTMENT

REPORT OF CALIBRATION

TENNESSEE VALLEY AUTHORITY
Chattanooga, Tennessee

ID NO. 890593

Instrument	Manufacturer	Model
Data Logging System	Fluke	2286A

Last Calibrated	Date Next Calibration	Calibration Interval	Date This Calibration
Initial Cal	8-23-93	6 months	2-23-93

Received From	Disposition to	Instruction Number
Central Lab / E.Q. Lab.	Central Lab / E.Q. Lab	320.1-2

Instrument Accuracy

64 mV, 512 mV, 8V ranges: ± (.012% of input + 8 counts); 64 V range: ± (.024% of input 4 counts);
Thermocouple Type: N/A ; Temperature Accuracy: N/A

Standards Used

TVA- 890635

Status

As-Found	Within Tolerance	☑	Out-of-Tolerance	☐	Not Required	☐	See Remarks	☐
As-Left	Within Tolerance	☑	Test Incomplete	☐	Not Required	☐	See Remarks	☐

REMARKS/DATA

"Left As Found"

Instrument tested with input modules listed only.

	As Found	As Left
System Program	✓	
Channel Program	✓	
Scan Group Program	✓	
Alarm List Program	✓	
Plot Program	✓	
Systems Diagnostics	✓	

(✓) Indicates Satisfactory Performance

Temperature (Type Thermocouple)

Range STD Held On

Data taken from modules listed below:
TVA- 903589, 905889

THIS INSTRUMENT WAS TESTED AND CALIBRATED TO PRESCRIBED TEST PROCEDURES AND THE CONDITION OF THE INSTRUMENT IS INDICATED.

Calibrated By: James H Sedlettes

Approved By: C L Lutledge

Copies to:

Page 1 of 3 (2 of 7) CLR 2-26-93

CENTRAL LABORATORIES SERVICES DEPARTMENT

REPORT OF CALIBRATION

TENNESSEE VALLEY AUTHORITY
Chattanooga, Tennessee

ID NO: 890593
PLANT: C.L. / E.Q.
DATE: 2-23-93

"Left As Found"

320.1-2 Fluke

A/D Converter TVA-903589
Module: 905889
Channels C 0 - C

Range	STD Held On	T.I. Reading As Found	T.I. Reading As Left
64 mV	63 mV	63.010	
	60	60.010	
	50	50.008	
	40	40.006	
	30	30.004	
	20	20.004	
	10	10.003	
512 mV	510	510.05	
	500	500.05	
	400	400.03	
	300	300.02	
	200	200.01	
	100	100.01	
8V	7.9	7.9008	
	6	6.0005	
	4	4.0003	
	2	2.0002	
64V	63.9	63.909	
	60	60.009	
	50	50.007	
	40	40.005	
	30	30.004	
	20	20.002	
	10	10.001	

TVA 6497A (P PROD-10-88)

CENTRAL LABORATORIES SERVICES BRANCH

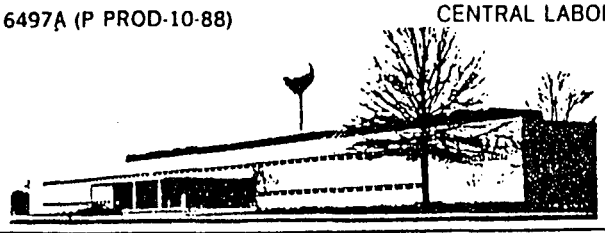

REPORT OF CALIBRATION

TENNESSEE VALLEY AUTHORITY
CHATTANOOGA, TENNESSEE

ID NO. 890593

INSTRUMENT	MANUFACTURER	MODEL
DATA LOGGING SYSTEM	FLUKE	2286A

LAST CALIBRATED	DATE NEXT CALIBRATION	CALIBRATION INTERVAL	DATE THIS CALIBRATION
INITIAL	8-23-93	6MO	2-27-93

RECEIVED FROM	DISPOSITION TO	INSTRUCTION NUMBER
CLSD EQ LAB	SAME	320.1-2

INSTRUMENT ACCURACY

± ~~0.6°C~~ TYPE T
0.5°C CLR 3-3-93

STANDARDS USED

891602 906014
905463

STATUS

AS-FOUND	WITHIN TOLERANCE ☐	OUT-OF-TOLERANCE ☐	NOT REQUIRED ☑	SEE REMARKS ☐
AS-LEFT	WITHIN TOLERANCE ☑	TEST INCOMPLETE ☐	NOT REQUIRED ☐	SEE REMARKS ☐

REMARKS/DATA

See next sheet for data for each channel

THIS INSTRUMENT WAS TESTED AND CALIBRATED ACCORDING TO PRESCRIBED TEST PROCEDURES AND THE CONDITION OF THE INSTRUMENT IS INDICATED

CALIBRATED BY	APPROVED BY
Chl Z Bowling	C L Lutledge

COPIES TO

TVA 6497A-1 (P PROD-10-88)

CENTRAL LABORATORIES SERVICES BRANCH

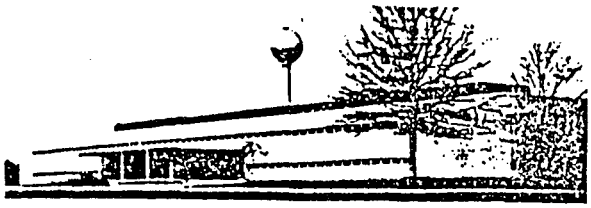

REPORT OF CALIBRATION

continuation sheet

TENNESSEE VALLEY AUTHORITY
CHATTANOOGA, TENNESSEE

ID NO.	890593
PLANT	CLSD EQ LAB
DATE	2-27-93

DATA/REMARKS

CHANNEL	THERMOCOUPLE NUMBER	STD °C ~~UUT~~ CJB 30.09 2-27-93	STD °C 39.98	STD °C 70.05	STD °C 90.06	STD °C 95.16
		UUT °C	UUT °C	UUT °C	UUT °C	UUT °C
0	9	30.09	39.92	70.05	89.98	95.06
1	10	30.11	39.91	70.05	89.96	95.05
2	11	30.12	39.92	70.05	89.96	95.05
3	12	30.14	39.95	70.06	89.98	95.06
4	13	30.14	39.97	70.06	89.98	95.06
5	14	30.15	39.97	70.08	90.01	95.09
6	15	30.14	39.97	70.06	90.00	95.06
7	16	30.14	39.97	70.06	89.97	95.05
8	17	30.15	39.98	70.08	89.98	95.08
9	24	30.18	39.99	70.06	89.98	95.08
20	0	29.94	39.80	69.95	89.86	94.98
21	1	29.94	39.83	69.96	89.88	94.98
22	2	29.96	39.83	69.96	89.88	94.98
23	3	29.97	39.86	69.96	89.86	94.97
24	4	29.97	39.85	69.95	89.84	94.94
25	5	29.97	39.85	69.96	89.89	94.98
26	6	29.99	39.86	69.97	89.88	94.99
27	7	29.99	39.86	69.96	89.86	94.98
28	8	30.00	39.89	69.97	89.89	94.98
29	23	30.01	39.92	69.99	89.88	94.98
40	18	30.05	39.86	69.96	89.88	95.03
41	19	30.08	39.86	69.96	89.88	95.02
42	20	30.09	39.88	69.97	89.89	95.03
43	21	30.09	39.88	69.96	89.87	95.02
44	22	30.11	39.90	69.98	89.92	95.05

TVA 6497A-1 (P PROD-10-88)

CENTRAL LABORATORIES SERVICES BRANCH

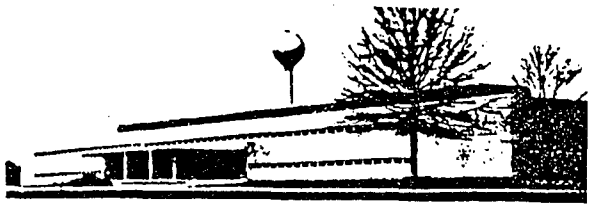

REPORT OF CALIBRATION

continuation sheet

ID NO.	890593
PLANT	EQ Lab
DATE	3-5-93

TENNESSEE VALLEY AUTHORITY
CHATTANOOGA, TENNESSEE

mc 3/5/93

DATA/REMARKS

Standards Used: ~~903894~~ 903847, 890647
Accuracy: ± 1 % of reading

NOTE: Current measurements made using a current transformer connected to a current transducer with 0-5 A AC input and 5 k output load 0-1maDC output. This is measured on data logger 0-8 V dc range. The standard amps are calculated using the millivolt reading divided by the resistance of the shunt (0.0000967 ohms).
The current for the data logger is calculated by multipling the Volts DC by the ratio of the current transformer.
The multiplication is performed in the computer program that records the data.

Channel 73 CLR 3-17-93

STD (mV)	STD (Amps)	UUT VDC	Ratio	Current	Error
3.987	40.00	.998	200:5	39.92	-0.20
5.982	60.02	1.500	200:5	60.00	-0.03
7.974	80.00	1.998	200:5	79.92	-0.10

TVA 6497A-1 (P PROD-10-88)

CENTRAL LABORATORIES SERVICES BRANCH

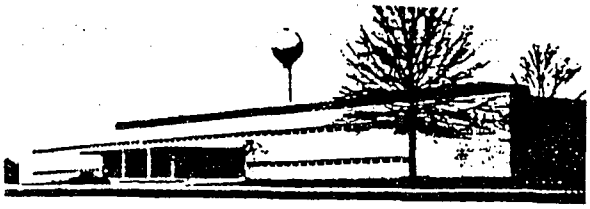

REPORT OF CALIBRATION

continuation sheet

TENNESSEE VALLEY AUTHORITY
CHATTANOOGA, TENNESSEE

ID NO.	890 593
PLANT	EQ Lab
DATE	3-17-93

DATA/REMARKS

Standards Used: 903849, 890647
Accuracy: ± 1 % of reading

NOTE: Current measurements made using a current transformer connected to a current transducer with 0-5 A AC input and 5 k output load 0-1maDC output. This is measured on data logger 0-8 V dc range. The standard amps are calculated using the millivolt reading divided by the resistance of the shunt (0.0000967 ohms).
The current for the data logger is calculated by multipling the Volts DC by the ratio of the current transformer.
The multiplication is performed in the computer program that records the data.

Channel 70

STD (mV)	STD (Amps)	UUT VDC	Ratio	Current	Error
10.014	100.5	1.260	400:5	100.8	0.30
19.936	200.0	2.505	400:5	200.4	0.20
29.912	300.1	3.745	400:5	299.6	-0.17
39.834	399.7	4.980	400:5	398.4	-0.32

Channel 71

STD (mV)	STD (Amps)	UUT VDC	Ratio	Current	Error
9.998	100.3	1.258	400:5	100.6	0.30
19.974	200.4	2.507	400:5	200.6	0.10
29.907	300.1	3.754	400:5	300.3	0.17
39.817	399.7	4.979	400:5	398.3	-0.32

CLR

TVA 6479A (P PROD 10-88)

CENTRAL LABORATORIES SERVICES DEPARTMENT

REPORT OF CALIBRATION

TENNESSEE VALLEY AUTHORITY
Chattanooga, Tennessee

ID NO. 890593

Instrument	Manufacturer	Model
Data Logging System	Fluke	2286A

Last Calibrated	Date Next Calibration	Calibration Interval	Date This Calibration
2-23-93	None	6 months	3-26-93

Received From	Disposition to	Instruction Number
EQ Lab	EQ Lab	322.1-1

Instrument Accuracy

See attached sheets

Standards Used

890635, 906014, 905463, 891602, 903849, 890647

Status

As-Found	Within Tolerance	☐	Out of Tolerance	☒ *	Not Required	☐	See Remarks	☐
As-Left	Within Tolerance	☐	Test Incomplete	☐	Not Required	☑	See Remarks	☐

REMARKS/DATA

This report is for the data logger used on Job 93-0501. This is for the instrumentation used on the three conductor cable

* 2 thermocouples were open and no data could be taken

AS FOUND
OUT OF TOLERANCE

THIS INSTRUMENT WAS TESTED AND CALIBRATED TO PRESCRIBED TEST PROCEDURES AND THE CONDITION OF THE INSTRUMENT IS INDICATED.

Calibrated By C L Rutledge

Approved By [signature]

Copies to:

'1207D

CENTRAL LABORATORIES SERVICES DEPARTMENT

REPORT OF CALIBRATION

TENNESSEE VALLEY AUTHORITY
Chattanooga, Tennessee

ID NO. 890593

Instrument	Manufacturer	Model
Data Logging System	Fluke	2286 A

Last Calibrated	Date Next Calibration	Calibration Interval	Date This Calibration
2-23-93	None	6 months	3-26-93

Received From	Disposition to	Instruction Number
Central lab / E.Q.	Central lab / E.Q.	320.1-2

Instrument Accuracy

64 mV, 512 mV, 8V ranges: ± (.012% of input + 8 counts); 64 V range: ± (.024% of input 4 counts);
Thermocouple Type:_____; Temperature Accuracy:_____

Standards Used

TVA-890635

Status

As-Found	Within Tolerance	☑	Out-of-Tolerance	☐	Not Required	☐	See Remarks	☐
As-Left	Within Tolerance	☐	Test Incomplete	☐	Not Required	☑	See Remarks	☐

REMARKS/DATA

"As Found Only"

Instrument tested with input modules listed only.

	As Found	As Left
System Program	✓	
Channel Program	✓	
Scan Group Program	✓	
Alarm List Program	✓	
Plot Program	✓	
Systems Diagnostics	✓	

(✓) Indicates Satisfactory Performance

Temperature (Type Thermocouple)

Range STD Held On

Data taken from modules listed below:
TVA- 903589
TVA- 905889

THIS INSTRUMENT WAS TESTED AND CALIBRATED TO PRESCRIBED TEST PROCEDURES AND THE CONDITION OF THE INSTRUMENT IS INDICATED.

Calibrated By: James H Sedlitter

Approved By: [signature]

Copies to:

CLR 3-26-93 Page 1 of 2 CLR 3-26-93

CENTRAL LABORATORIES SERVICES DEPARTMENT

REPORT OF CALIBRATION

TENNESSEE VALLEY AUTHORITY
Chattanooga, Tennessee

ID NO: 890593
PLANT: CIL E.Q.
DATE: 3-26-93

320.1-2 Fluke

A/D Converter 903589
module: 905889
Channels C 0 - C

Range	STD Held On	T.I. Reading As Found	T.I. Reading As Left
64 mV	63 mV	63.010	
	60	60.008	
	50	50.007	
	40	40.006	
	30	30.005	
	20	20.005	
	10	10.004	
512 mV	510	510.05	
	500	500.05	
	400	400.03	
	300	300.02	
	200	200.01	
	100	100.01	
8V	7.9	7.9007	
	6	6.0005	
	4	4.0003	
	2	2.0002	
64V	63.9	63.908	
	60	60.007	
	50	50.005	
	40	40.004	
	30	30.003	
	20	20.001	
	10	10.001	

CLR 3-26-93

CLR 3-26-93

TVA 6497A (P PROD-10-88)

CENTRAL LABORATORIES SERVICES BRANCH

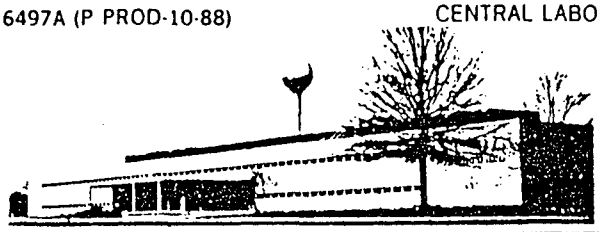

REPORT OF CALIBRATION

TENNESSEE VALLEY AUTHORITY
CHATTANOOGA, TENNESSEE

ID NO. 890593

INSTRUMENT	MANUFACTURER	MODEL
DATA LOGGING SYSTEM	FLUKE	2286A

LAST CALIBRATED	DATE NEXT CALIBRATION	CALIBRATION INTERVAL	DATE THIS CALIBRATION
2-23-93	NA	NA	3-25-93

RECEIVED FROM	DISPOSITION TO	INSTRUCTION NUMBER
CLSD EQ LAB	SAME	320.1-2

INSTRUMENT ACCURACY

± 0.5 °C BY SPECIAL REQUEST

STANDARDS USED

906014 905463
891602

STATUS

AS-FOUND	WITHIN TOLERANCE ☐	* OUT-OF-TOLERANCE ☑	NOT REQUIRED ☐	SEE REMARKS ☐
AS-LEFT	WITHIN TOLERANCE ☐	TEST INCOMPLETE ☐	NOT REQUIRED ☑	SEE REMARKS ☐

REMARKS/DATA

AF ONLY

THIS INSTRUMENT WAS TESTED AND CALIBRATED ACCORDING TO PRESCRIBED TEST PROCEDURES AND THE CONDITION OF THE INSTRUMENT IS INDICATED

CALIBRATED BY	APPROVED BY
[signature]	[signature]

COPIES TO: _____

CLS 3-26-93

TVA 6497A-1 (P PROD-10-88)

CENTRAL LABORATORIES SERVICES BRANCH

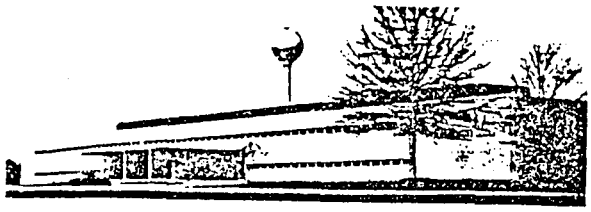

REPORT OF CALIBRATION

continuation sheet

TENNESSEE VALLEY AUTHORITY
CHATTANOOGA, TENNESSEE

ID NO.	890593
PLANT	CLSD EQ LAB
DATE	3-25-93

DATA/REMARKS

TEMPERATURE °C

	STD.	30.00	39.98	70.02	89.98	95.60
CHANNEL	TC#	NA	NA	NA	NA	NA
0	9	29.95	39.88	69.93	89.81	95.43
1	10	29.98	39.90	69.95	89.85	95.45
2	11	29.98	39.91	69.97	89.85	95.47
3	12	30.00	39.94	69.99	89.86	95.47
4	13	30.00	39.94	69.99	89.85	95.47
5	14	30.00	39.94	69.99	89.88	95.48
6	15	OPEN *	OPEN *	OPEN *	OPEN *	OPEN *
7	16	30.00	39.95	70.00	89.88	95.49
8	17	30.00	39.98	70.02	89.89	95.49
9	24	30.00	39.98	70.00	89.85	95.47
20	0	29.87	39.77	69.84	89.71	95.32
21	1	29.89	39.80	69.85	89.74	95.33
22	2	29.89	39.81	69.87	89.75	95.34
23	3	29.89	39.84	69.88	89.75	95.36
24	4	29.90	39.86	69.90	89.76	95.36
25	5	29.90	39.86	69.90	89.76	95.37
26	6	29.90	39.86	OPEN *	OPEN *	OPEN *
27	7	29.90	39.87	69.90	89.76	95.36
28	8	29.90	39.88	69.93	89.79	95.37
29	23	29.90	39.91	69.93	89.79	95.37
40	18	29.92	39.85	69.93	89.74	95.40
41	19	29.93	39.86	69.94	89.74	95.41
42	20	29.93	39.89	69.96	89.77	95.42
43	21	29.94	39.90	69.94	89.74	95.38
44	22	29.94	39.90	69.98	89.77	95.42

TVA 6497A-1 (P PROD-10-88)

CENTRAL LABORATORIES SERVICES BRANCH

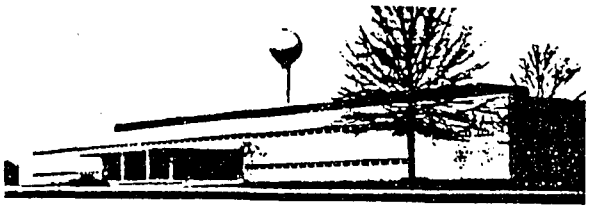

REPORT OF CALIBRATION

continuation sheet

TENNESSEE VALLEY AUTHORITY
CHATTANOOGA, TENNESSEE

ID NO.	890593
PLANT	EQ Lab
DATE	3-24-93

DATA/REMARKS

Standards Used: 903849, 890647
Accuracy: ± 1 % of reading

NOTE: Current measurements made using a current transformer connected to a current transducer with 0-5 A AC input and 5 k output load 0-1maDC output. This is measured on data logger 0-8 V dc range. The standard amps are calculated using the millivolt reading divided by the resistance of the shunt (0.0000967 ohms).
The current for the data logger is calculated by multipling the Volts DC by the ratio of the current transformer.
The multiplication is performed in the computer program that records the data.

Channel 73

STD (mV)	STD (Amps)	UUT VDC	Ratio	Current	Error
3.983	40.00	.994	200:5	39.8	-0.50
5.992	60.10	1.507	200:5	60.3	0.30
7.990	80.20	2.018	200:5	80.7	0.60

CLR

TVA 6497A-1 (P PROD-10-88)

CENTRAL LABORATORIES SERVICES BRANCH

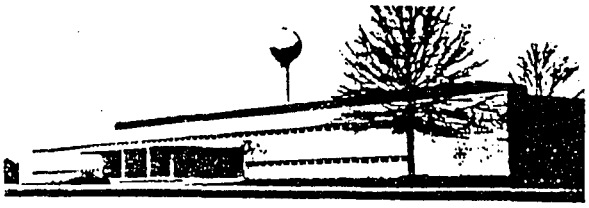

REPORT OF CALIBRATION

continuation sheet

ID NO.	890593
PLANT	EQ Lab
DATE	3-24-93

TENNESSEE VALLEY AUTHORITY
CHATTANOOGA, TENNESSEE

DATA/REMARKS

Standards Used: 903849, 890647
Accuracy: ± 1 % of reading

NOTE: Current measurements made using a current transformer connected to a current transducer with 0-5 A AC input and 5 k output load 0-1maDC output. This is measured on data logger 0-8 V dc range. The standard amps are calculated using the millivolt reading divided by the resistance of the shunt (0.0000967 ohms). The current for the data logger is calculated by multipling the Volts DC by the ratio of the current transformer. The multiplication is performed in the computer program that records the data.

Channel 70

STD (mV)	STD (Amps)	UUT VDC	Ratio	Current	Error
9.960	99.9	1.248	400:5	99.8	-0.10
19.994	200.6	2.508	400:5	200.6	0.00
29.988	300.9	3.757	400:5	300.6	-0.10
39.898	400.3	4.998	400:5	399.8	-0.12

Channel 71

STD (mV)	STD (Amps)	UUT VDC	Ratio	Current	Error
9.948	99.8	1.247	400:5	99.8	0.00
19.950	200.2	2.503	400:5	200.2	0.00
29.944	300.4	3.755	400:5	300.4	0.00
39.943	400.8	5.009	400:5	400.7	-0.03

CLR

NONCONFORMANCE REPORT

Part I: Completed by QA/QC Section
NCR No. 93047 Page 8 of 8
Item Identification No.: TVA 890593
Item Description: Fluke 2286 Data Acquisition System

//

Part II: COMPLETED BY THE INITIATOR OF THE NONCONFORMANCE REPORT

Nonconformance Description: Two thermocouple (C6 and C26) were reading open when the "AS FOUND" test was started. The thermocouples were reading when the last test was performed. The thermocouples were inserted between strands of a conductor during the test and when the thermocouples were removed the lead broke.

Initiated By: C.L. Rutledge Date: 3-25-93

//

Part III: COMPLETED BY SECTION SUPERVISOR

Review Reports ____ yes ✓ no Date 3/26/93 Signature [signature]

Proposed Disposition: FAILED IN SERVICE. NO DATA TAKEN FOLLOWING THE TIME DAMAGE OCCURRED. PROCEED WITH REPLACEMENT.

Section Supervisor [signature] Date 3/26/93

//

Part IV: COMPLETED BY THE QA/QC SECTION

Approved Disposition: ✓ As Recommended ___ Other (Describe)
[signature] 3-26-93

//

Part V: FINAL APPROVAL AND RELEASE FROM NONCONFORMANCE STATUS

*Significant Condition Adverse to Quality: ✓ No ____ YES-CAR ____

QA/QC Supervisor: [signature] Date: 3-26-93

*Note: If it is determined at any point in the process that there has been significant impact to quality, the provisions of CLS-QAP 12.2, "Corrective Action", shall be implemented.

TVA 6479A (P PROD 10-88)

CENTRAL LABORATORIES SERVICES DEPARTMENT

REPORT OF CALIBRATION

TENNESSEE VALLEY AUTHORITY
Chattanooga, Tennessee

ID NO.	890593

Instrument	Manufacturer	Model
Data Acquisition System	Fluke	2286A

Last Calibrated	Date Next Calibration	Calibration Interval	Date This Calibration
3-26-93	09-26-93	6 months	03-26-93

Received From	Disposition to	Instruction Number
EQ Lab - CLSD	EQ Lab - CLSD	322.1-1

Instrument Accuracy

See attached sheets for instrument accuracies

Standards Used

903849, 890647, 890635, 891602, 906014, 905463

Status

As-Found	Within Tolerance ☐	Out of-Tolerance ☐	Not Required ☑	See Remarks ☐
As-Left	Within Tolerance ☑	Test Incomplete ☐	Not Required ☐	See Remarks ☐

REMARKS/DATA

See attached sheets for data on individual channels.
Used for Job Number 93-0501. Cable Ampacity Testing in 1" and 4" conduits with 4 conductor cables.

THIS INSTRUMENT WAS TESTED AND CALIBRATED TO PRESCRIBED TEST PROCEDURES AND THE CONDITION OF THE INSTRUMENT IS INDICATED.

Calibrated By: C L Rutledge

Approved By: Walter E Ely

Copies to: JAW

1207D

CENTRAL LABORATORIES SERVICES DEPARTMENT

REPORT OF CALIBRATION

TENNESSEE VALLEY AUTHORITY
Chattanooga, Tennessee

ID NO. 890593

Instrument	Manufacturer	Model
Data Logging System	Fluke	2286A

Last Calibrated	Date Next Calibration	Calibration Interval	Date This Calibration
Initial Cal	9-26-93	6 months	3-26-93

Received From	Disposition to	Instruction Number
Central Lab / E.Q.	Central Lab / E.Q.	320.1-2

Instrument Accuracy

64 mV, 512 mV, 8V ranges: ± (.012% of input + 8 counts); 64 V range: ± (.024% of input 4 counts);
Thermocouple Type:_____; Temperature Accuracy:_____

Standards Used

TVA-890635

Status

As-Found	Within Tolerance ☐	Out-of-Tolerance ☐	Not Required ☑	See Remarks ☐
As-Left	Within Tolerance ☑	Test Incomplete ☐	Not Required ☐	See Remarks ☐

REMARKS/DATA

"As Left Only"

Instrument tested with input modules listed only.

	As Found	As Left
System Program		✓
Channel Program		✓
Scan Group Program		✓
Alarm List Program		✓
Plot Program		✓
Systems Diagnostics		✓

(✓) Indicates Satisfactory Performance

Temperature (Type Thermocouple)

Range STD Held On

Data taken from modules listed below:
TVA- 903589
TVA- 905889

THIS INSTRUMENT WAS TESTED AND CALIBRATED TO PRESCRIBED TEST PROCEDURES AND THE CONDITION OF THE INSTRUMENT IS INDICATED.

Calibrated By: James H. Ledbetter

Approved By: [signature]

Copies to:

Page 1 of 2 CLR

4-23-93

CENTRAL LABORATORIES SERVICES DEPARTMENT

REPORT OF CALIBRATION

TENNESSEE VALLEY AUTHORITY
Chattanooga, Tennessee

ID NO: 890593
PLANT: C/L E.Q.
DATE: 3-26-93

320.1-2 Fluke

A/D Converter 903589
Module: 905889
Channels C 0 - C

Range	STD Held On	T.I. Reading As Found	T.I. Reading As Left
64 mV	63 mV		63.010
	60		60.008
	50		50.007
	40		40.006
	30		30.005
	20		20.005
	10		10.004
512 mV	510		510.05
	500		500.05
	400		400.03
	300		300.02
	200		200.01
	100		100.01
8V	7.9		7.9007
	6		6.0005
	4		4.0003
	2		2.0002
64V	63.9		63.908
	60		60.007
	50		50.005
	40		40.004
	30		30.003
	20		20.001
	10		10.001

1207D

GLR 4-23-93

TVA 6497A (P PROD-10-88)

CENTRAL LABORATORIES SERVICES BRANCH

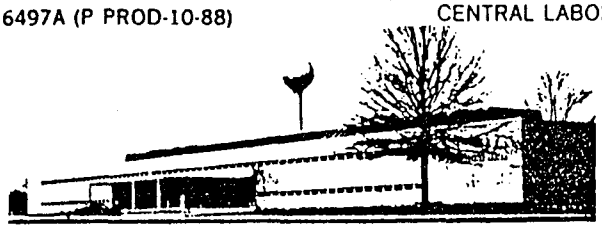

REPORT OF CALIBRATION

TENNESSEE VALLEY AUTHORITY
CHATTANOOGA, TENNESSEE

ID NO. 890593

INSTRUMENT	MANUFACTURER	MODEL
DATA LOGGING SYSTEM	FLUKE	2286A

LAST CALIBRATED	DATE NEXT CALIBRATION	CALIBRATION INTERVAL	DATE THIS CALIBRATION
INITIAL	9-27-93	6 MO	3-27-93

RECEIVED FROM	DISPOSITION TO	INSTRUCTION NUMBER
CLSD EQ LAB	SAME	322.1-1

INSTRUMENT ACCURACY

± .5°C BY SPECIAL REQUEST

STANDARDS USED

906014 891602
905463

STATUS

AS-FOUND	WITHIN TOLERANCE ☐	OUT-OF-TOLERANCE ☐	NOT REQUIRED ☑	SEE REMARKS ☐
AS-LEFT	WITHIN TOLERANCE ☑	TEST INCOMPLETE ☐	NOT REQUIRED ☐	SEE REMARKS ☐

REMARKS/DATA

FOR DATA SEE PAGES 2 & 3

THIS INSTRUMENT WAS TESTED AND CALIBRATED ACCORDING TO PRESCRIBED TEST PROCEDURES AND THE CONDITION OF THE INSTRUMENT IS INDICATED

CALIBRATED BY	APPROVED BY
Chl L Bowling	Walter E Foley

COPIES TO:

TVA 6497A-1 (P PROD-10-88)

CENTRAL LABORATORIES SERVICES BRANCH

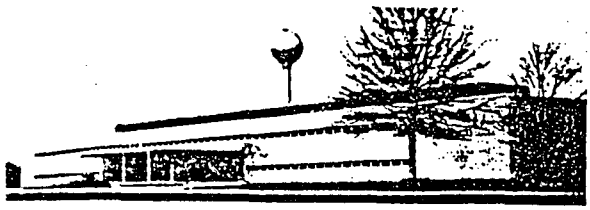

REPORT OF CALIBRATION

continuation sheet

TENNESSEE VALLEY AUTHORITY
CHATTANOOGA, TENNESSEE

ID NO.	890593
PLANT	CLSD EQ LAB
DATE	3-27-93

DATA/REMARKS

CHANNEL	STD / TC	C&B 3-27-93 29.95	40.01	69.99	90.02	95.00
0	0	29.91	3989	69.91	90.05	94.94
1	1	29.90	39.90	69.90	90.03	94.94
2	2	29.89	39.91	69.91	90.04	94.96
3	3	29.89	39.94	69.91	90.03	94.99
4	4	29.89	39.94	69.92	90.04	95.01
5	5	29.90	39.96	69.95	90.07	95.05
6	6	29.89	39.96	69.92	90.05	95.05
7	7	29.90	39.97	69.95	90.07	95.07
8	8	29.89	39.97	69.95	90.07	95.07
9	9	29.90	40.00	69.96	90.05	95.10
10	10	29.90	40.03	69.97	90.08	95.14
11	11	29.90	40.03	69.99	90.08	95.15
12	12	29.89	40.04	70.00	90.08	95.15
13	13	29.90	40.04	69.99	90.08	95.17
20	14	29.87	39.84	69.86	89.99	94.91
21	15	29.85	39.87	69.85	89.99	94.93
22	16	29.85	39.89	69.87	90.02	94.96
23	17	29.85	39.90	69.87	90.01	95.01
24	18	29.87	39.91	69.88	90.02	95.01
25	19	29.87	39.91	69.90	90.02	95.02
26	20	29.85	39.91	69.90	90.03	95.04
27	21	29.87	39.93	69.90	90.02	95.04
28	22	29.87	39.94	69.90	90.02	95.05
29	23	29.87	39.95	69.93	90.04	95.10
30	24	29.87	39.98	69.94	90.04	95.11
31	25	29.85	39.97	69.94	90.04	95.10
32	26	29.85	39.97	69.94	90.04	95.09
33	27	29.85	39.98	69.94	90.06	95.11

TVA 6497A-1 (P PROD-10-88)

CENTRAL LABORATORIES SERVICES BRANCH

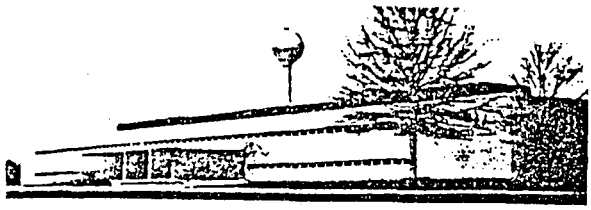

REPORT OF CALIBRATION

continuation sheet

TENNESSEE VALLEY AUTHORITY
CHATTANOOGA, TENNESSEE

ID NO.	890593
PLANT	CLSD EQ LAB
DATE	3-27-93

DATA/REMARKS

	STD	29.95	40.01	69.99	90.02	95.00
CHANNEL	TC	NA	NA	NA	NA	NA
40	28	29.91	39.96	69.91	90.06	95.03
41	29	29.91	39.99	69.92	90.05	95.07
42	30	29.91	39.99	69.92	90.07	95.07
43	31	29.91	40.01	69.94	90.05	95.09
44	32	29.93	40.01	69.95	90.07	95.10

TVA 6497A-1 (P PROD-10-88)

CENTRAL LABORATORIES SERVICES BRANCH

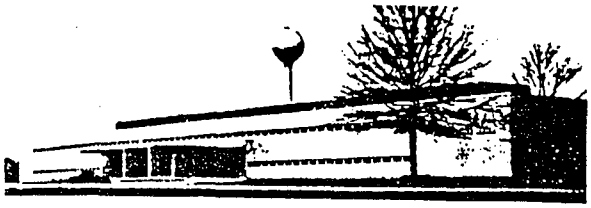

REPORT OF CALIBRATION

continuation sheet

TENNESSEE VALLEY AUTHORITY
CHATTANOOGA, TENNESSEE

ID NO.	890593
PLANT	EQ Lab
DATE	3-28-93

DATA/REMARKS

Standards Used: 903849, 890647
Accuracy: ± 1 % of reading

NOTE: Current measurements made using a current transformer connected to a current transducer with 0-5 A AC input and 5 k output load 0-1maDC output. This is measured on data logger 0-8 V dc range. The standard amps are calculated using the millivolt reading divided by the resistance of the shunt (0.0000967 ohms). The current for the data logger is calculated by multipling the Volts DC by the ratio of the current transformer. The multiplication is performed in the computer program that records the data.

Channel 73

STD (mV)	STD (Amps)	UUT VDC	Ratio	Current	Error
3.995	40.08	.996	200:5	39.84	-0.60
5.987	60.07	1.501	200:5	60.04	-0.05
7.958	79.84	2.000	200:5	80.00	0.20

TVA 6497A-1 (P PROD-10-88)

CENTRAL LABORATORIES SERVICES BRANCH

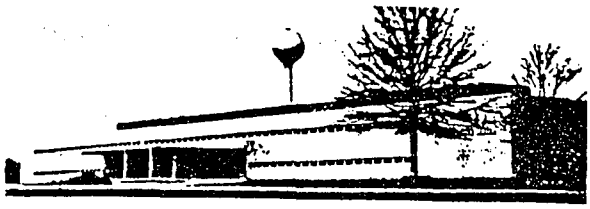

REPORT OF CALIBRATION

continuation sheet

ID NO.	890593
PLANT	EQ Lab
DATE	4-1-93

TENNESSEE VALLEY AUTHORITY
CHATTANOOGA, TENNESSEE

DATA/REMARKS

Standards Used: 903849, 890647
Accuracy: ± 1 % of reading

NOTE: Current measurements made using a current transformer connected to a current transducer with 0-5 A AC input and 5 k output load 0-1maDC output. This is measured on data logger 0-8 V dc range. The standard amps are calculated using the millivolt reading divided by the resistance of the shunt (0.0000967 ohms). The current for the data logger is calculated by multipling the Volts DC by the ratio of the current transformer. The multiplication is performed in the computer program that records the data.

Channel 70

STD (mV)	STD (Amps)	UUT VDC	Ratio	Current	Error
10.010	100.4	1.251	400:5	100.1	-0.30
19.972	200.4	2.496	400:5	199.7	-0.35
29.986	300.8	3.750	400:5	300.0	-0.27
39.936	400.7	4.992	400:5	399.4	-0.32

Channel 71

STD (mV)	STD (Amps)	UUT VDC	Ratio	Current	Error
9.998	100.3	1.250	400:5	100.0	-0.30
19.932	200.0	2.496	400:5	199.7	-0.15
30.000	301.0	3.754	400:5	300.3	-0.23
39.941	400.7	4.995	400:5	399.6	-0.27

CENTRAL LABORATORIES SERVICES DEPARTMENT

REPORT OF CALIBRATION

TENNESSEE VALLEY AUTHORITY
Chattanooga, Tennessee

ID NO. 890593

Instrument	Manufacturer	Model
Data Acquisition System	Fluke	2286A

Last Calibrated	Date Next Calibration	Calibration Interval	Date This Calibration
3-26-93	~~10-19-93~~ N/A	6 months	04-19-93

Received From	Disposition To	Instruction Number
EQ Lab - CLSD JAW 4-26-93	EQ Lab - CLSD	322.1-1

Instrument Accuracy

See attached sheets for instrument accuracies

Standards Used

903849, 572564, 890635, 891602, 906014, 905463

Status

As-Found	Within Tolerance ☐	Out-of-Tolerance * ☒	Not Required ☐	See Remarks ☐
As-Left	Within Tolerance ☐	Test Incomplete ☐	Not Required ☑	See Remarks ☐

REMARKS/DATA

* Four thermocouples were open and no "as-found" data was taken.

See attached sheets for data on individual channels.
Used for Job Number 93-0501. Cable Ampacity Testing in 1" and 4" conduits with 4 conductor cables. Post test calibration.

AS FOUND
OUT OF TOLERANCE

THIS INSTRUMENT WAS TESTED AND CALIBRATED TO PRESCRIBED TEST PROCEDURES AND THE CONDITION OF THE INSTRUMENT IS INDICATED.

Calibrated By	Approved By
CL Rutledge	Walter E. Fly JAW

Copies to:

TVA 6479A (P PROD 10-88)

1207D

CENTRAL LABORATORIES SERVICES DEPARTMENT

REPORT OF CALIBRATION

TENNESSEE VALLEY AUTHORITY
Chattanooga, Tennessee

ID NO. 890593

Instrument	Manufacturer	Model
Data Logging System	Fluke	2286

Last Calibrated	Date Next Calibration	Calibration Interval	Date This Calibration
3-26-93	~~7-23-93~~ JAN 26 93 N/A	6 months	4-23-93

Received From	Disposition to	Instruction Number
Central Lab / E.Q. Lab	Central Lab / E.Q. Lab	320.1-2

Instrument Accuracy

64 mV, 512 mV, 8V ranges: ± (.012% of input + 8 counts); 64 V range: ± (.024% of input 4 counts);
Thermocouple Type:_____; Temperature Accuracy:_____

Standards Used

TVA-890635

Status

As-Found	Within Tolerance	☑	Out-of-Tolerance	☐	Not Required	☐	See Remarks	☐
As-Left	Within Tolerance	☐	Test Incomplete	☐	Not Required	☑	See Remarks	☐

REMARKS/DATA

Instrument tested with input modules listed only.

	As Found	As Left
System Program	✓	
Channel Program	✓	
Scan Group Program	✓	
Alarm List Program	✓	
Plot Program	✓	
Systems Diagnostics	✓	

(✓) Indicates Satisfactory Performance

Temperature (Type Thermocouple)

Range STD Held On

Data taken from modules listed below:
A/D - TVA- 903589

THIS INSTRUMENT WAS TESTED AND CALIBRATED TO PRESCRIBED TEST PROCEDURES AND THE CONDITION OF THE INSTRUMENT IS INDICATED.

Calibrated By: James H Sedletter

Approved By: Walter E Fly

Copies to:

MC 4/30/93

CENTRAL LABORATORIES SERVICES DEPARTMENT

REPORT OF CALIBRATION

TENNESSEE VALLEY AUTHORITY
Chattanooga, Tennessee

ID NO: 890593
PLANT: C.L. / E.Q.
DATE: 4-23-93

"As Found"

320.1-2 Fluke

A/D Converter 903589

Channels C 60 - C

Range	STD Held On	T.I. Reading As Found	T.I. Reading As Left
64 mV	63 mV	63.008	
	60	60.009	
	50	50.008	
	40	40.006	
	30	30.005	
	20	20.005	
	10	10.004	
512 mV	510	510.05	
	500	500.05	
	400	400.03	
	300	300.02	
	200	200.01	
	100	100.01	
8V	7.9	7.9008	
	6	6.0005	
	4	4.0004	
	2	2.0002	
64V	63.9	63.909	
	60	60.008	
	50	50.006	
	40	40.005	
	30	30.003	
	20	20.002	
	10	10.001	

mc 4/30/93

TVA 6497A (P PROD-10-88)

CENTRAL LABORATORIES SERVICES BRANCH

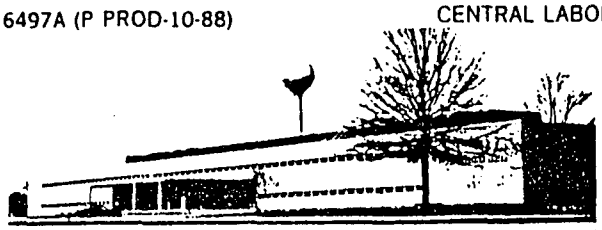

REPORT OF CALIBRATION

TENNESSEE VALLEY AUTHORITY
CHATTANOOGA, TENNESSEE

ID NO. 890593

INSTRUMENT	MANUFACTURER	MODEL
DATA LOGGING SYSTEM	FLUKE	2286A

LAST CALIBRATED	DATE NEXT CALIBRATION	CALIBRATION INTERVAL	DATE THIS CALIBRATION
3-27-93	NA	6MO	4-23-93

RECEIVED FROM	DISPOSITION TO	INSTRUCTION NUMBER
CLSD EQ LAB	NCR HOLD	322.1-1

INSTRUMENT ACCURACY

± .5°C BY SPECIAL REQUEST

STANDARDS USED

906014 891602
905463

STATUS

AS FOUND	WITHIN TOLERANCE ☐	* OUT-OF-TOLERANCE ☑	NOT REQUIRED ☐	SEE REMARKS ☐
AS-LEFT	WITHIN TOLERANCE ☐	* TEST INCOMPLETE ☑	NOT REQUIRED ☐	SEE REMARKS ☐

REMARKS/DATA

* see NCR Report 93048.

THIS INSTRUMENT WAS TESTED AND CALIBRATED ACCORDING TO PRESCRIBED TEST PROCEDURES AND THE CONDITION OF THE INSTRUMENT IS INDICATED

CALIBRATED BY	APPROVED BY
Charles L Bowling	Walter E Gaby

COPIES TO:

TVA 6497A-1 (P PROD-10-88)

CENTRAL LABORATORIES SERVICES BRANCH

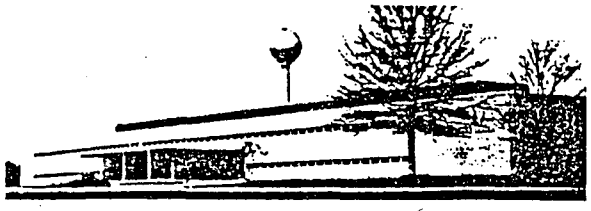

REPORT OF CALIBRATION

continuation sheet

TENNESSEE VALLEY AUTHORITY
CHATTANOOGA, TENNESSEE

ID NO.	890593
PLANT	2 C20 4-23-93 CLSD EQLAB
DATE	4-23-93

DATA/REMARKS

STD °C

CHANNEL	TC °C	29.99	40.01	70.00	89.95	94.98
0	0	29.89	39.97	69.91	89.87	94.91
1	1	29.87	39.96	69.94	89.92	94.95
2	2	29.87	39.97	69.97	89.95	94.98
3	3	OPEN*	OPEN*	OPEN*	OPEN*	OPEN*
4	4	29.88	39.97	70.03	90.01	95.03
5	5	29.88	39.97	70.05	90.03	95.08
6	6	29.88	39.98	70.07	90.05	95.08
7	7	OPEN*	OPEN*	OPEN*	OPEN*	OPEN*
8	8	OPEN*	OPEN*	OPEN*	OPEN*	OPEN*
9	9	29.89	39.98	70.11	90.09	95.11
10	10	29.90	40.00	70.14	90.13	95.15
11	11	29.90	40.01	70.14	90.14	95.18
12	12	29.88	40.00	70.14	90.14	95.16
13	13	29.88	40.00	70.14	90.14	95.16
20	14	29.82	39.91	69.91	89.88	94.89
21	15	OPEN*	OPEN*	OPEN*	OPEN*	OPEN*
22	16	29.82	39.91	69.96	89.94	94.96
23	17	29.82	39.91	69.99	89.95	94.97
24	18	29.84	39.92	70.02	90.00	95.01
25	19	29.85	39.93	70.03	90.02	95.02
26	20	29.84	39.92	70.04	90.02	95.03
27	21	29.84	39.92	70.04	90.03	95.04
28	22	29.85	39.92	70.05	90.04	95.06
29	23	29.84	39.93	70.10	90.09	95.12
30	24	29.84	39.92	70.12	90.10	95.12
31	25	29.84	39.93	70.11	90.10	95.12
32	26	29.84	39.92	70.07	90.07	95.09
33	27	29.85	39.93	70.08	90.08	95.09

TVA 6497A-1 (P PROD-10-88)

CENTRAL LABORATORIES SERVICES BRANCH

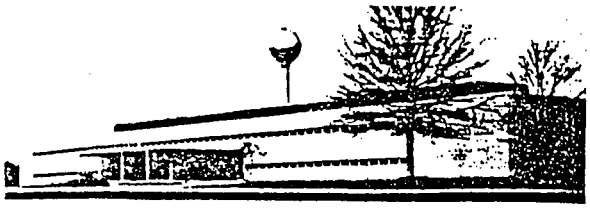

REPORT OF CALIBRATION

continuation sheet

ID NO.	890593
PLANT	CLSD EQLAB
DATE	4-23-93

TENNESSEE VALLEY AUTHORITY
CHATTANOOGA, TENNESSEE

DATA/REMARKS

STD °C

CHANNEL	TC °C	29.99	40.01	70.00	89.95	94.98
40	28	29.89	39.98	70.06	89.94	94.97
41	29	29.90	39.99	70.10	89.99	95.01
42	30	29.90	39.99	70.10	89.99	95.03
43	31	29.89	40.01	70.15	90.04	95.09
44	32	29.92	40.01	70.15	90.05	95.08

TVA 6497A-1 (P PROD-10-88)

CENTRAL LABORATORIES SERVICES BRANCH

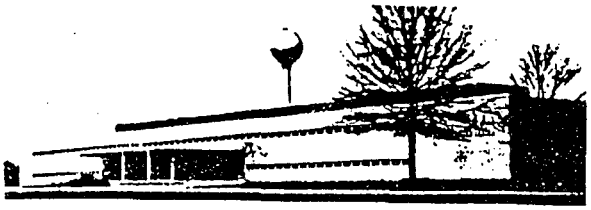

REPORT OF CALIBRATION

continuation sheet

ID NO.	890593
PLANT	EQ Lab
DATE	4-19-93

TENNESSEE VALLEY AUTHORITY
CHATTANOOGA, TENNESSEE

DATA/REMARKS

Standards Used: 903849, 572564
Accuracy: ± 1 % of reading

NOTE: Current measurements made using a current transformer connected to a current transducer with 0-5 A AC input and 5 k output load 0-1maDC output. This is measured on data logger 0-8 V dc range. The standard amps are calculated using the millivolt reading divided by the resistance of the shunt (0.0000967 ohms).
The current for the data logger is calculated by multipling the Volts DC by the ratio of the current transformer.
The multiplication is performed in the computer program that records the data.

Channel 70

STD (mV)	STD (Amps)	UUT VDC	Ratio	Current	Error
9.965	99.8	1.238	400:5	99.0	-0.80
19.890	199.6	2.480	400:5	198.4	-0.60
29.730	298.3	3.706	400:5	296.5	-0.60
39.731	398.6	4.952	400:5	396.2	-0.60

Channel 71

STD (mV)	STD (Amps)	UUT VDC	Ratio	Current	Error
9.965	99.9	1.238	400:5	99.0	-0.90
19.889	199.5	2.482	400:5	198.6	-0.45
29.740	298.4	3.710	400:5	296.8	-0.54
39.730	398.6	4.955	400:5	396.4	-0.55

CALIBRATED BY C.L. Rutledge REVIEWED BY [illegible]

TVA 6497A-1 (P PROD-10-88)

CENTRAL LABORATORIES SERVICES BRANCH

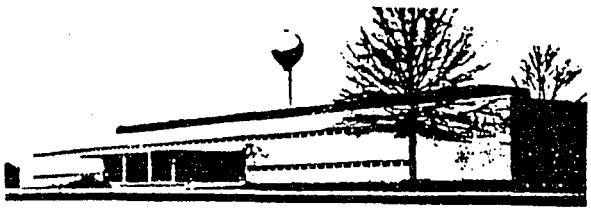

REPORT OF CALIBRATION

continuation sheet

ID NO.	890593
PLANT	E Q Lab
DATE	4-19-93

TENNESSEE VALLEY AUTHORITY
CHATTANOOGA, TENNESSEE

DATA/REMARKS

Standards Used: 903849, 572564
Accuracy: ± 1 % of reading

NOTE: Current measurements made using a current transformer connected to a current transducer with 0-5 A AC input and 5 k output load 0-1maDC output. This is measured on data logger 0-8 V dc range. The standard amps are calculated using the millivolt reading divided by the resistance of the shunt (0.0000967 ohms).
The current for the data logger is calculated by multipling the Volts DC by the ratio of the current transformer.
The multiplication is performed in the computer program that records the data.

Channel 73

STD (mV)	STD (Amps)	UUT VDC	Ratio	Current	Error
3.966	39.8	.992	200:5	39.7	-0.25
6.008	60.3	1.500	200:5	60.0	-0.50
8.003	80.3	2.004	200:5	80.1	-0.25

CALIBRATED BY C. L. Rutledge REVIEWED BY [signature]

NONCONFORMANCE REPORT

Part I: Completed by QA/QC Section
NCR No. 93048 Page 9 of 9
Item Identification No.: TVA890593
Item Description: Data Logger

//

Part II: COMPLETED BY THE INITIATOR OF THE NONCONFORMANCE REPORT

Nonconformance Description: Channels 3 and 7 thermocouples are open. Channel 3 was not used. Channel 7 was used up to 3-30-93. It will not be used on an as found test performed. Channels 8 and 21 were open when the "post test" cal. was done. Do not perform "AS-FOUND" for these 4 Channels
C L Rutledge 4-23-93 CLR 4-23-93

Initiated By: C L Rutledge Date: 3-31-93

//

Part III: COMPLETED BY SECTION SUPERVISOR

Review Reports ____ yes ✓ no Date 3/31/93 Signature [signature]

Proposed Disposition: STANDARD MAY REMAIN IN USE WITH THE EXCEPTIONS OF CHANNELS 3 AND 7.

Section Supervisor [signature] Date 3/31/93

//

Part IV: COMPLETED BY THE QA/QC SECTION

Approved Disposition: ✓ As Recommended ___ Other (Describe)

Date 3-31-93
Proceed with repairs on thermocouples 8 and 21 as well as 3 and 7; no As Found data possible. [illegible] 4-23-93

//

Part V: FINAL APPROVAL AND RELEASE FROM NONCONFORMANCE STATUS

*Significant Condition Adverse to Quality: ✓ No ____ YES-CAR ____

QA/QC Supervisor: [signature] Date: 4/23/93

*Note: If it is determined at any point in the process that there has been significant impact to quality, the provisions of CLS-QAP 12.2, "Corrective Action", shall be implemented.

TVA 6479A (P PROD 10-88)

CENTRAL LABORATORIES SERVICES DEPARTMENT

REPORT OF CALIBRATION

TENNESSEE VALLEY AUTHORITY
Chattanooga, Tennessee

ID NO. 890593

Instrument	Manufacturer	Model
Data Acquisition System	Fluke	2286A

Last Calibrated	Date Next Calibration	Calibration Interval	Date This Calibration
04-19-93	10-29-93	6 months	04-29-93

Received From	Disposition	Instruction Number
EQ Lab - CLSD	EQ Lab - CLSD	322.1-1

Instrument Accuracy

See attached sheets for instrument accuracies

Standards Used

900484, 572564, 890635, 891602, 906014, 905463

Status

As-Found	Within Tolerance ☐	Out-of-Tolerance ☐	Not Required ☒	See Remarks ☐
As-Left	Within Tolerance ☒	Test Incomplete ☐	Not Required ☐	See Remarks ☐

REMARKS/DATA

See attached sheets for data on individual channels. Use for Job Number 93-0501. Cable Ampacity Testing in 4" conduits with 24 ~~conducotr~~ #6 AWG cables. Pre test calibration. CONDUCTOR N.E.J. 4/29/93

Also report of calibration for 3 phase testing in 4" conduit. CLR 5-25-93 N.E.J. 5/25/93

THIS INSTRUMENT WAS TESTED AND CALIBRATED TO PRESCRIBED TEST PROCEDURES AND THE CONDITION OF THE INSTRUMENT IS INDICATED.

Calibrated By: CL Rutledge

Approved By: JAW

Copies to:

 CLR 5-25-93

TVA 6479A (P PROD 10-88)

1207D

CENTRAL LABORATORIES SERVICES DEPARTMENT

REPORT OF CALIBRATION

TENNESSEE VALLEY AUTHORITY
Chattanooga, Tennessee

ID NO. 890593

Instrument	Manufacturer	Model
Data Logging System	Fluke	2286

Last Calibrated	Date Next Calibration	Calibration Interval	Date This Calibration
3-26-93	10-23-93	6 months	4-23-93

Received From	Disposition to	Instruction Number
Central Lab / E.Q. Lab	Central Lab / E.Q. Lab	320.1-2

Instrument Accuracy

64 mV, 512 mV, 8V ranges: ± (.012% of input + 8 counts); 64 V range: ± (.024% of input 4 counts);
Thermocouple Type:_____; Temperature Accuracy:_____

Standards Used

TVA- 890635

Status

As-Found	Within Tolerance	☐	Out-of-Tolerance	☐	Not Required	☑	See Remarks	☐
As-Left	Within Tolerance	☑	Test Incomplete	☐	Not Required	☐	See Remarks	☐

REMARKS/DATA

"As Left"

Instrument tested with input modules listed only.

	As Found	As Left
System Program		✓
Channel Program		✓
Scan Group Program		✓
Alarm List Program		✓
Plot Program		✓
Systems Diagnostics		✓

(✓) Indicates Satisfactory Performance

Temperature (Type Thermocouple)

Range STD Held On

Data taken from modules listed below:

AID- TVA - 903589

THIS INSTRUMENT WAS TESTED AND CALIBRATED TO PRESCRIBED TEST PROCEDURES AND THE CONDITION OF THE INSTRUMENT IS INDICATED.

Calibrated By: James H Ledbetter

Approved By: Walter E Foly

Copies to:

Page ~~1~~ 2 of ~~3~~ 7 8 CLR 5-25-93

CLR 4-29-93

CENTRAL LABORATORIES SERVICES DEPARTMENT

REPORT OF CALIBRATION

TENNESSEE VALLEY AUTHORITY
Chattanooga, Tennessee

ID NO: 890593
PLANT: C.L. / E.Q.
DATE: 4-23-93

"As Left"

320.1-2 Fluke

A/D Converter 903589

Channels C 60 - C

Range	STD Held On	T.I. Reading As Found	T.I. Reading As Left
64 mV	63 mV		63.008
	60		60.009
	50		50.008
	40		40.006
	30		30.005
	20		20.005
	10		10.004
512 mV	510		510.05
	500		500.05
	400		400.03
	300		300.02
	200		200.01
	100		100.01
8V	7.9		7.9008
	6		6.0005
	4		4.0004
	2		2.0002
64V	63.9		63.909
	60		60.008
	50		50.006
	40		40.005
	30		30.003
	20		20.002
	10		10.001

1207D

TVA 6497A (P PROD-10-88)

CENTRAL LABORATORIES SERVICES BRANCH

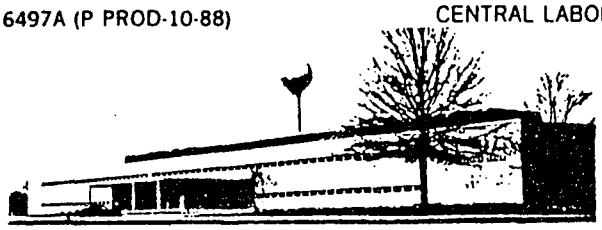

REPORT OF CALIBRATION

TENNESSEE VALLEY AUTHORITY
CHATTANOOGA, TENNESSEE

ID NO. 890593

INSTRUMENT	MANUFACTURER	MODEL
DATA LOGGING SYSTEM	FLUKE	2286A

LAST CALIBRATED	DATE NEXT CALIBRATION	CALIBRATION INTERVAL	DATE THIS CALIBRATION
4-23-93	10-24-93	6 mo.	4-24-93

RECEIVED FROM	DISPOSITION TO	INSTRUCTION NUMBER
NCR HOLD	CLSD EQ LAB	322.1-1

INSTRUMENT ACCURACY

±.5°C BY SPECIAL REQUEST

STANDARDS USED

906014 891602
905463

STATUS

AS-FOUND	WITHIN TOLERANCE ☐	OUT-OF-TOLERANCE ☐	NOT REQUIRED ☑	SEE REMARKS ☐
AS-LEFT	WITHIN TOLERANCE ☑	TEST INCOMPLETE ☐	NOT REQUIRED ☐	SEE REMARKS ☐

REMARKS/DATA

FOR AF DATA SEE REPORT DATED 4-23-93

THIS INSTRUMENT WAS TESTED AND CALIBRATED ACCORDING TO PRESCRIBED TEST PROCEDURES AND THE CONDITION OF THE INSTRUMENT IS INDICATED

CALIBRATED BY: Chas L Bowling

APPROVED BY: [illegible]

COPIES TO

CLB 5-25-93

TVA 6497A-1 (P PROD-10-88)

CENTRAL LABORATORIES SERVICES BRANCH

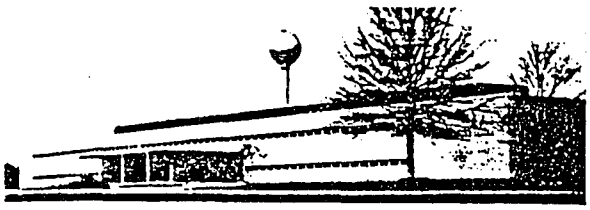

REPORT OF CALIBRATION

continuation sheet

TENNESSEE VALLEY AUTHORITY
CHATTANOOGA, TENNESSEE

ID NO.	890593
PLANT	CLSD EQ LAB
DATE	4-24-93

DATA/REMARKS

CHANNEL	TC °C	29.95	40.10	70.08	89.78	94.92
0	0	29.81	39.94	69.95	89.71	94.85
1	1	29.83	39.97	69.96	89.71	94.85
2	2	29.86	39.99	70.00	89.75	94.88
3	3	29.89	40.04	70.04	89.79	94.93
4	4	29.87	40.04	70.04	89.79	94.93
5	5	29.90	40.05	70.08	89.83	94.98
6	6	29.90	40.07	70.09	89.84	94.99
7	7	29.91	40.08	70.11	89.85	94.99
8	8	29.93	40.08	70.13	89.88	95.01
9	9	29.96	40.12	70.16	89.90	95.07
10	10	29.97	40.15	70.21	89.95	95.09
11	11	29.97	40.15	70.24	89.96	95.12
12	12	29.94	40.15	70.22	89.96	95.10
13	13	29.94	40.15	70.22	89.96	95.10
20	14	29.74	39.91	69.93	89.65	94.82
21	15	29.75	39.94	69.98	89.68	94.86
22	16	29.77	39.98	70.01	89.71	94.90
23	17	29.81	40.01	70.03	89.75	94.91
24	18	29.81	40.02	70.06	89.78	94.95
25	19	29.84	40.04	70.06	89.78	94.96
26	20	29.84 ~~29.9~~ 4-28-93	40.04	70.09	89.80	94.98
27	21	29.95	40.04	70.10	89.80	94.98
28	22	29.87	40.08	70.11	89.83	95.01
29	23	29.91	40.11	70.16	89.88	95.05
30	24	29.94	40.12	70.20	89.93	95.08
31	25	29.91	40.12	70.20	89.92	95.08
32	26	29.90	40.10	70.16	89.89	95.04
33	27	29.91	40.11	70.17	89.91	95.05

 CLR 6-25-93

TVA 6497A-1 (P PROD-10-88)

CENTRAL LABORATORIES SERVICES BRANCH

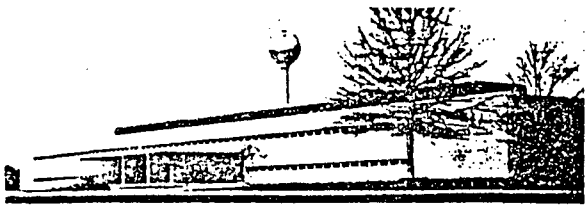

REPORT OF CALIBRATION

continuation sheet

TENNESSEE VALLEY AUTHORITY
CHATTANOOGA, TENNESSEE

ID NO.	890593
PLANT	CLSD EQ LAB
DATE	4-24-93

DATA/REMARKS

CHANNEL	TC °C	29.95	40.10	70.08	89.78	94.92
40	28	29.87	40.07	70.06	89.80	94.94
41	29	29.90	40.09	70.10	89.85	94.98
42	30	29.91	40.12	70.11	89.87	94.99
43	31	29.94	40.15	70.17	89.91	95.03
44	32	29.93	40.15	70.15	89.91	95.01

 CLR 5-25-93

TVA 6497A-1 (P PROD-10-88)

CENTRAL LABORATORIES SERVICES BRANCH

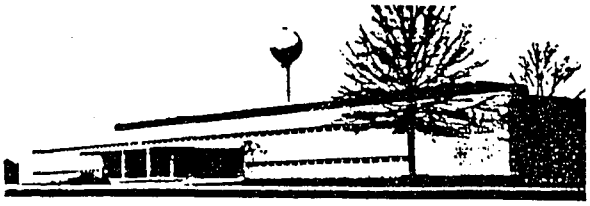

REPORT OF CALIBRATION

continuation sheet

TENNESSEE VALLEY AUTHORITY
CHATTANOOGA, TENNESSEE

ID NO.	890593
PLANT	CLSD EQ Lab
DATE	4-29-93

DATA/REMARKS

Standards Used: 900484, 572564
Accuracy: ± 1 % of reading

NOTE: Current measurements made using a current transformer connected to a current transducer with 0-5 A AC input and 5 k output load 0-1maDC output. This is measured on data logger 0-8 V dc range. The standard amps are calculated using the millivolt reading divided by the resistance of the shunt (0.0010048 ohms).
The current for the data logger is calculated by multipling the Volts DC by the ratio of the current transformer.
The multiplication is performed in the computer program that records the data.

Channel 73

STD (mV)	STD (Amps)	UUT VDC	Ratio	Current	Error
20.191	20.095	.501	200:5	20.03	-0.32
30.218	30.074	.754	200:5	30.14	0.22
40.179	39.987	1.004	200:5	40.16	0.43
50.086	49.847	1.255	200:5	50.20	0.70

CALIBRATED BY C L Lutledge

 CLR 5-25-93

TVA 6497A-1 (P PROD-10-88)

CENTRAL LABORATORIES SERVICES BRANCH

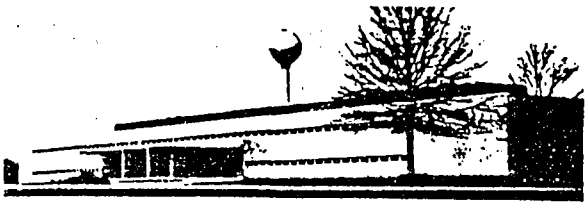

REPORT OF CALIBRATION

continuation sheet

TENNESSEE VALLEY AUTHORITY
CHATTANOOGA, TENNESSEE

ID NO.	890593
PLANT	CLSD - EQ
DATE	5-25-93

DATA/REMARKS

Standards Used: 900484, 572564
Accuracy: ± 1 % of reading

NOTE: Current measurements made using a current transformer connected to a current transducer with 0-5 A AC input and 5 k output load 0-1maDC output. This is measured on data logger 0-8 V dc range. The standard amps are calculated using the millivolt reading divided by the resistance of the shunt (0.0010048 ohms). The current for the data logger is calculated by multipling the Volts DC by the ratio of the current transformer. The multiplication is performed in the computer program that records the data.

Channel 71

STD (mV)	STD (Amps)	UUT VDC	Ratio	Current	Error
20.259	20.162	.5045	200:5	20.18	0.09
30.081	29.937	.7495	200:5	29.98	0.14
40.146	40.004	1.0013	200:5	40.05	0.12
50.286	50.046	1.2521	200:5	50.08	0.07

Channel 72

STD (mV)	STD (Amps)	UUT VDC	Ratio	Current	Error
20.191	20.094	.5029	200:5	20.11	0.08
30.212	30.068	.7544	200:5	30.18	0.37
40.180	39.988	1.0044	200:5	40.19	0.50
50.096	49.875	1.2523	200:5	50.09	0.43

CALIBRATED BY C L Rutledge DATE 5-25-93
H.E.A. 5/25/93

CENTRAL LABORATORIES SERVICES DEPARTMENT

REPORT OF CALIBRATION

TENNESSEE VALLEY AUTHORITY
Chattanooga, Tennessee

ID NO. 890593

Instrument	Manufacturer	Model
Data Acquisition System	Fluke	2286A

Last Calibrated	Date Next Calibration	Calibration Interval	Date This Calibration
04-29-93	N/A	N/A	06-24-93

Received From	Disposition	Instruction Number
EQ Lab - CLSD	EQ Lab - CLSD	322.1-1

Instrument Accuracy

See attached sheets for instrument accuracies

Standards Used

900484, 572564, 890635, 891602, 906014, 905463

Status

As-Found	Within Tolerance	☐	Out of Tolerance	*☒	Not Required	☐	See Remarks	☐
As-Left	Within Tolerance	☐	Test Incomplete	☐	Not Required	☒	See Remarks	☐

REMARKS/DATA

As-found test only. Instrument to be in calibrate before use status.
See attached sheets for data on individual channels.
Use for Job Number 93-0501. Cable Ampacity Testing in 4" conduits with 24 conductor #6 AWG cables. Also used for 3 phase test in 1" and 4" conduits. Post test calibration.

AS FOUND
OUT OF TOLERANCE

THIS INSTRUMENT WAS TESTED AND CALIBRATED TO PRESCRIBED TEST PROCEDURES AND THE CONDITION OF THE INSTRUMENT IS INDICATED.

Calibrated By: C L Rutledge

Approved By: Walter E Foley

Copies to:

1207D

CENTRAL LABORATORIES SERVICES DEPARTMENT

REPORT OF CALIBRATION

TENNESSEE VALLEY AUTHORITY
Chattanooga, Tennessee

ID NO. 890593

Instrument	Manufacturer	Model
Data Logging System	Fluke	2286

Last Calibrated	Date Next Calibration	Calibration Interval	Date This Calibration
4-23-93	None	6 months	6-24-93

Received From	Disposition to	Instruction Number
Central Lab / E.Q. Lab	Central Lab / E.Q. Lab	320.1-2

Instrument Accuracy

64 mV, 512 mV, 8V ranges: ± (.012% of input + 8 counts); 64 V range: ± (.024% of input 4 counts);
Thermocouple Type: N/A ; Temperature Accuracy: N/A

Standards Used

TVA- 890635

Status

As-Found	Within Tolerance	☑	Out-of-Tolerance	☐	Not Required	☐	See Remarks	☐
As-Left	Within Tolerance	☐	Test Incomplete	☐	Not Required	☑	See Remarks	☐

REMARKS/DATA

"As Found Only"

Instrument tested with input modules listed only.

	As Found	As Left
System Program	✓	
Channel Program	✓	
Scan Group Program	✓	
Alarm List Program	✓	
Plot Program	✓	
Systems Diagnostics	✓	

(✓) Indicates Satisfactory Performance

Temperature (Type Thermocouple)

Range STD Held On

Data taken from modules listed below:

A/D - TVA-903589

THIS INSTRUMENT WAS TESTED AND CALIBRATED TO PRESCRIBED TEST PROCEDURES AND THE CONDITION OF THE INSTRUMENT IS INDICATED.

Calibrated By: James H. Ledbetter

Approved By: Walter E. Fly

Copies to:

CENTRAL LABORATORIES SERVICES DEPARTMENT

REPORT OF CALIBRATION

TENNESSEE VALLEY AUTHORITY
Chattanooga, Tennessee

ID NO: 890593
PLANT: C.L. / E.Q.
DATE: 6-24-93

320.1-2 Fluke

A/D Converter 903589

Channels C 0 - C

Range	STD Held On	T.I. Reading As Found	T.I. Reading As Left
64 mV	63 mV	63.009	
	60	60.009	
	50	50.007	
	40	40.006	
	30	30.005	
	20	20.004	
	10	10.004	
512 mV	510	510.05	
	500	500.05	
	400	400.03	
	300	300.03	
	200	200.01	
	100	100.01	
8V	7.9	7.9009	
	6	6.0006	
	4	4.0004	
	2	2.0002	
64V	63.9	63.909	
	60	60.008	
	50	50.006	
	40	40.005	
	30	30.003	
	20	20.002	
	10	10.001	

TVA 6497A (P PROD-10-88)

CENTRAL LABORATORIES SERVICES BRANCH

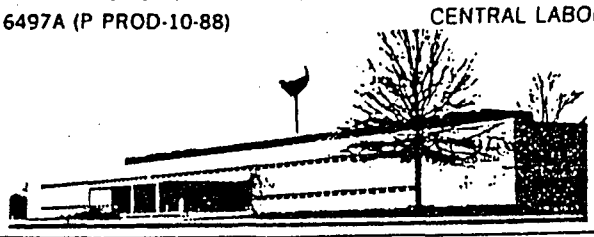

REPORT OF CALIBRATION

TENNESSEE VALLEY AUTHORITY
CHATTANOOGA, TENNESSEE

ID NO. 890593

INSTRUMENT	MANUFACTURER	MODEL
DATA LOGGING SYSTEM	FLUKE	2286A

LAST CALIBRATED	DATE NEXT CALIBRATION	CALIBRATION INTERVAL	DATE THIS CALIBRATION
4-24-93		6 MO	6-23-93

RECEIVED FROM	DISPOSITION TO	INSTRUCTION NUMBER
CLSD EQ LAB	SAME	322.1-1

INSTRUMENT ACCURACY

± .5°C BY REQUEST

STANDARDS USED

906014 905463
89/602

STATUS

AS-FOUND	WITHIN TOLERANCE ☐	OUT-OF-TOLERANCE ☑ *	NOT REQUIRED ☐	SEE REMARKS ☐
AS-LEFT	WITHIN TOLERANCE ☐	TEST INCOMPLETE ☐	NOT REQUIRED ☑	SEE REMARKS ☐

REMARKS/DATA

AS FOUND

THIS INSTRUMENT WAS TESTED AND CALIBRATED ACCORDING TO PRESCRIBED TEST PROCEDURES AND THE CONDITION OF THE INSTRUMENT IS INDICATED

CALIBRATED BY	APPROVED BY	
Carl L Rowley	Walter E Epley	H.E.4. 6/24/93

COPIES TO:

TVA 6497A-1 (P PROD-10-88)

CENTRAL LABORATORIES SERVICES BRANCH

REPORT OF CALIBRATION

continuation sheet

TENNESSEE VALLEY AUTHORITY
CHATTANOOGA, TENNESSEE

ID NO.	890593
PLANT	CLSD EQ LAB
DATE	6-23-93

DATA/REMARKS

CHANNEL	TC#&	29.95	39.94	69.99	90.03	94.94 STD °C
0	0	29.87	39.77	69.93	90.01	94.85
1	1	29.86	39.79	69.90	89.99	94.87
2	2	OPEN*	OPEN*	OPEN*	OPEN*	OPEN*
3	3	29.86	39.80	69.91	89.98	94.92
4	4	29.85	39.80	69.90	89.97	94.89
5	5	OPEN*	OPEN*	OPEN*	OPEN*	OPEN*
6	6	29.86	39.83	69.91	89.99	94.93
7	7	29.86	39.83	69.91	89.98	94.94
8	8	29.86	39.83	69.93	90.02	94.97
9	9	29.86	39.84	69.93	90.01	94.98
10	10	29.85	39.87	69.95	90.03	95.04
11	11	29.85	39.87	69.93	90.01	95.00
12	12	29.85	39.87	69.93	90.01	95.02
13	13	29.87	39.86	69.93	90.02	95.03
20	14	29.82	39.76	69.87	89.90	94.83
21	15	29.82	39.75	69.87	89.90	94.83
22	16	29.82	39.75	69.87	89.91	94.86
23	17	29.84	39.78	69.87	89.91	94.89
24	18	29.84	39.79	69.90	89.94	94.92
25	19	29.84	39.79	69.90	89.93	94.91
26	20	29.84	39.81	69.90	89.94	94.92
27	21	29.84	39.78	69.85	89.88	94.88
28	22	29.85	39.79	69.87	89.91	94.89
29	23	OPEN*	OPEN*	OPEN*	OPEN*	OPEN*
30	24	OPEN*	OPEN*	OPEN*	OPEN*	OPEN*
31	25	29.83	39.81	69.93	90.00	95.01
32	26	29.83	39.80	69.90	89.96	94.96
33	27	29.81	39.80	69.91	89.96	94.98

TVA 6497A-1 (P PROD-10-88)

CENTRAL LABORATORIES SERVICES BRANCH

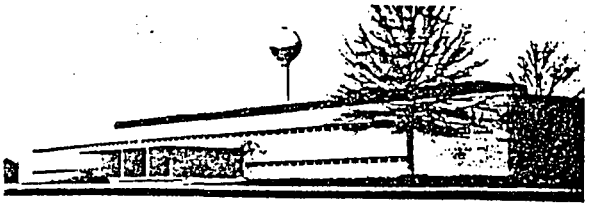

REPORT OF CALIBRATION

continuation sheet

TENNESSEE VALLEY AUTHORITY
CHATTANOOGA, TENNESSEE

ID NO.	890593
PLANT	CLSD EQ LAB
DATE	6-23-93

DATA/REMARKS

CHANNEL	Tc#°c	29.95	39.94	69.99	90.03	94.94	STD °C
40	28	29.89	39.86	69.93	89.99	94.88	
41	29	29.89	39.86	69.92	89.98	94.90	
42	30	29.87	39.86	69.92	89.98	94.90	
43	31	29.87	39.87	69.92	89.99	94.94	
44	32	29.87	39.88	69.94	89.99	94.95	

TVA 6497A-1 (P PROD-10-88)

CENTRAL LABORATORIES SERVICES BRANCH

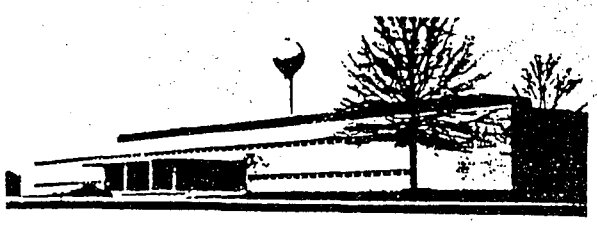

REPORT OF CALIBRATION

continuation sheet

ID NO.	890593
PLANT	EQ Lab
DATE	6-22-93

TENNESSEE VALLEY AUTHORITY
CHATTANOOGA, TENNESSEE

DATA/REMARKS

Standards Used: 900484, 572564
Accuracy: ± 1 % of reading

NOTE: Current measurements made using a current transformer connected to a current transducer with 0-5 A AC input and 5 k output load 0-1maDC output. This is measured on data logger 0-8 V dc range. The standard amps are calculated using the millivolt reading divided by the resistance of the shunt (0.0000967 ohms). The current for the data logger is calculated by multipling the Volts DC by the ratio of the current transformer. The multiplication is performed in the computer program that records the data.

Channel 71

STD (mV)	STD (Amps)	UUT VDC	Ratio	Current	Error
19.706	19.61	0.4947	200:5	19.79	0.92
30.695	30.55	0.7690	200:5	30.76	0.69
40.511	40.32	1.0123	200:5	40.49	0.42
50.080	49.84	1.2476	200:5	49.90	0.12
70.076	69.74	1.7452	200:5	69.81	0.10

Channel 72

STD (mV)	STD (Amps)	UUT VDC	Ratio	Current	Error
19.478	19.38	0.4869	200:5	19.48	0.52
30.002	29.86	0.7510	200:5	30.04	0.60
40.138	39.95	1.0050	200:5	40.20	0.63
50.117	49.88	1.2470	200:5	49.88	0.00
70.250	69.91	1.7616	200:5	70.46	0.79

Channel 73

STD (mV)	STD (Amps)	UUT VDC	Ratio	Current	Error
19.570	19.48	0.4850	200:5	19.40	-0.41
30.295	30.15	0.7544	200:5	30.18	0.10
40.319	40.13	1.0063	200:5	40.25	0.30
50.605	50.36	1.2638	200:5	50.55	0.38
69.902	69.57	1.7485	200:5	69.94	0.63

CALIBRATED BY C. L. Rutledge REVIEWED BY Walter E. Poly

NONCONFORMANCE REPORT

Part I: Completed by QA/QC Section
NCR No. 93062
Item Identification No.: TVA 890593
Item Description: Data Logging System with Thermocouples

H.E.A. 6/24/93

Page 18 of 9

//

Part II: COMPLETED BY THE INITIATOR OF THE NONCONFORMANCE REPORT

Nonconformance Description: Thermocouples on channels # 2, 29, and 30 Are Found open.

Initiated By: C L Rutledge Date: 6-24-93

//

Part III: COMPLETED BY SECTION SUPERVISOR

Review Reports ____ yes ✓ no Date 6/24/93 Signature [signature]

Proposed Disposition: ACCEPT DATA OBTAINED FROM ABOVE MENTIONED THERMOCOUPLES. POST TEST CHECK NOT POSSIBLE.

Section Supervisor [signature] Date 6/24/93

//

Part IV: COMPLETED BY THE QA/QC SECTION

Approved Disposition: ✓ As Recommended ___ Other (Describe)

dlma 6-24-93

//

Part V: FINAL APPROVAL AND RELEASE FROM NONCONFORMANCE STATUS

*Significant Condition Adverse to Quality: ✓ No ____ YES-CAR _____

for QA/QC Supervisor: [signature] Date: 6-24-93

*Note: If it is determined at any point in the process that there has been significant impact to quality, the provisions of CLS-QAP 12.2, "Corrective Action", shall be implemented.

NONCONFORMANCE REPORT

2/24 6/24/93

Part I: Completed by QA/QC Section
NCR No. 93061
Item Identification No.: TVA 890593
Item Description: Data Logging System with Thermocouples

Page 1 of 9

//

Part II: COMPLETED BY THE INITIATOR OF THE NONCONFORMANCE REPORT

Nonconformance Description: Thermocouple #5 broke during testing. Recommend replace with another thermocouple and continue testing.

Initiated By: C L Rutledge Date: 6-21-93

//

Part III: COMPLETED BY SECTION SUPERVISOR

Review Reports ____ yes ✓ no Date 6-21-93 Signature Walter E. Ely

Proposed Disposition: SUBSTITUTE THERMOCOUPLE #2 FOR #5 AND CONTINUE TEST

Section Supervisor Walter E. Ely Date 6/21/93

//

Part IV: COMPLETED BY THE QA/QC SECTION

Approved Disposition: ✓ As Recommended ___ Other (Describe)
Dma 6-21-93

//

Part V: FINAL APPROVAL AND RELEASE FROM NONCONFORMANCE STATUS

*Significant Condition Adverse to Quality: ✓ No ____ YES-CAR ____

for QA/QC Supervisor: Dallas M. Ailey Date: 6-24-93

*Note: If it is determined at any point in the process that there has been significant impact to quality, the provisions of CLS-QAP 12.2, "Corrective Action", shall be implemented.

JOB NUMBER 93-0501

INSTRUMENT LOG

Description	TVA I.D.	Cal.	Due
Fluke 2286A	890593		*
			04-29-93*
		04-29-93	06-24-93*
24" Rule	900971	08-11-88	08-11-93
Phase Angle Meter	320436	04-16-93	10-16-93
Keithley 197	548497	05-10-93	08-10-93
Load Cell	506324	03-12-92	03-12-93
Starrett Digital	903574	10-15-92	04-15-93

*Report attached

ENCLOSURE 1

WATTS BAR NUCLEAR PLANT UNITS 1 AND 2

REVISED RESPONSE TO NRC GENERIC LETTER (GL) 81-07

NUREG-0612

"CONTROL OF HEAVY LOADS AT NUCLEAR POWER PLANTS"

WATTS BAR NUCLEAR PLANT (WBN) - UNITS 1 AND 2
REVISED RESPONSE TO NRC GL 81-07
(NUREG-0612)

TABLE OF CONTENTS

		PAGE
1.0	**CONTROL OF HEAVY LOADS AT WATTS BAR NUCLEAR PLANT**	**1**
1.1	Background	1
1.2	Introduction	1
1.3	Summary	1
1.4	Definitions	2
2.0	**WBN OVERHEAD HANDLING SYSTEMS/COMPLIANCE WITH NUREG-0612**	**3**
2.1	General Requirement for Overhead Handling Systems(1)	3
2.1-1	Overhead Handling Systems with Potential Load/Target Interaction	3
2.1-2	Overhead Handling Systems Excluded by Physical Separation	3
2.1-3	Compliance with NUREG-0612 Guidelines	5
2.1-3a	Fuel and Equipment Locations and Safe Load Paths	5
2.1.3b	Handling Procedures and Procedural Deviations	9
2.1.3c	Heavy Load Tabulation with Procedure References	10
2.1-3d	Lifting Device Compliance	10
2.1-3e	Overhead Crane Maintenance/Testing per ANSI B30.2	11
2.1-3f	Overhead Handling System Design Compliance	12
2.1-3g	Overhead Handling System Operator Qualification	12
3.0	**REFERENCES**	**13**
4.0	**REFERENCE CALCULATIONS**	**14**

WATTS BAR NUCLEAR PLANT (WBN) - UNITS 1 AND 2
REVISED RESPONSE TO NRC GL 81-07
(NUREG-0612)

LIST OF TABLES

TABLE I	Overhead Handling Systems with Potential Load/Target Interactions
TABLE II	Handling System Exclusions
TABLE III	NUREG-0612 OHS, Associated Loads, and Lift Devices
TABLE IV	Crane Design Compliance Verification
TABLE V	Heavy Load and Lifting Device Technical Data
TABLE VI	Load/Target Interactions with High Risk
Appendix A	WBN NUREG-0612 Drawings 44W411-01 through 10 "NUREG-0612 Overhead Handling System Locations"

ATTACHMENTS

TVA Standard STD-6.6, "Safe Practices for Operation of Overhead Handling Equipment," Revision 0.

WBN Engineering Specification N3M-940, "Design and Procurement of Lifting Devices," Revision 0.

(1) Format is keyed to the numbering sequence in NRC Generic Letter 81-07, Section 2.0.

WATTS BAR NUCLEAR PLANT (WBN) - UNITS 1 AND 2
REVISED RESPONSE TO NRC GL 81-07
(NUREG-0612)

1.0 CONTROL OF HEAVY LOADS AT WATTS BAR NUCLEAR PLANT

1.1 Background

The NRC requested, in GL 81-07 dated February 3, 1981 (Reference 3.1), applicants for operating licenses to submit a report documenting their compliance with NUREG-0612, "Control of Heavy Loads at Nuclear Power Plants" (Reference 3.3). Specifically, Enclosure 3 of GL 81-07 (Sections 2.1 through 2.4) was to be addressed. TVA's initial responses to this request for WBN were submitted on February 6, 1984 and March 20, 1984 (Enclosure 3, Section 2.1 only, later identified as "Phase I" in GL 85-11, Reference 3.2). Because WBN's initial responses preceded GL 85-11, a complete revision to WBN's program to address Phase I is provided herein.

1.2 Introduction

This submittal provides a complete response to NRC's GL 81-07 and specifies WBN's compliance with Sections 5.1 and 5.3 of NUREG-0612 in support of fuel load of WBN Unit 1. These sections of NUREG-0612 provide guidelines for the design and operation of load handling systems in the vicinity of stored spent fuel, the reactor core, and equipment and components required for safe shutdown or decay heat removal.

It should be noted that installation of WBN Unit 1 and Unit 2 Overhead Handling Systems (OHS) are approximately mirror images. Therefore, the OHS configurations and limitations applicable to Unit 1 will also be applicable to Unit 2 at the time of Unit 2 fuel load.

1.3 Summary

NRC GL 81-07 and NUREG-0612, Sections 5.1 and 5.3, require heavy load handling at nuclear power plants to meet the following seven guidelines to ensure safe handling of the load:

1. Safe load paths (SLP) shall be clearly defined.

2. Load handling procedures shall be in place.

3. Inspection and testing programs for overhead handling systems, including lift devices, shall be in place.

4. Operator qualification and training shall be controlled and documented.

5. ANSI N14.6 shall govern the design and application of special lifting devices.

6. ANSI B30.9 shall govern those lifting devices assembled from manufacturers components.

7. Crane design shall meet the requirements of CMAA-70, ANSI B30.2, or other applicable industry standards.

Heavy load handling at WBN complies with the intent of these seven guidelines described above and with TVA Standard STD-6.6, "Safe Practices for Operation of Overhead Handling Equipment," (attached). The tables in this report document each handling system (crane) and each lifting device used at WBN. In cases where design or procurement is not complete as of the date of this report, WBN is committed to be in compliance prior to the first time the specific lifting device is used after fuel load per Site Standard Practice (SSP)-6.06 (Reference 3.13).

1.4 Definitions

Critical Lift Zone/Potential Interaction Area

Plant area serviced by a particular OHS within which a load drop may result in damage to irradiated fuel, equipment and components required for safe-shutdown, or decay heat removal equipment.

Heavy Load

The term "heavy load" as used in this response is defined as a load greater than the weight of a fuel assembly including core components, plus the weight of a spent fuel tool, which is 2059 pounds (Reference 3.17).

Overhead Handling System (OHS)

A powered OHS comprised of the load bearing components used to lift and transfer or relocate a load. A handling system includes the crane or hoist, the lifting device, and the interfacing load lift points which are permanently attached to the load. This definition specifically excludes monorails provided with only chain-driven or nonpowered hoists and trolleys, permanently installed overhead hoisting eyes, package hoists, or specially designed hoisting equipment intended to produce machine motion.

2.0 WBN OVERHEAD HANDLING SYSTEMS/COMPLIANCE WITH NUREG-0612

The following sections quote the requests for information contained in Enclosure 3 of NRC's GL 81-07 and provide TVA's response for WBN.

2.1 General Requirements for Overhead Handling Systems

2.1-1 Overhead Handling Systems with Potential Load/Target Interaction

REQUEST

"Report the results of your review of plant arrangements to identify all overhead handling systems from which a load drop may result in damage to any system required for safe plant shutdown or decay heat removal (taking no credit for interlocks, technical specifications, operating procedures, or detailed structural analysis)."

TVA RESPONSE

The OHSs at WBN from which a heavy load drop could result in damage to systems required for safe plant shutdown or decay heat removal are summarized in Table I. Also listed in Table I are the OHS which are capable of carrying heavy loads in or near the reactor and spent fuel storage areas.

The location of these OHSs are shown in the figures provided in Appendix A, WBN drawings 44W411-1 through -10, titled "NUREG-0612 OVERHEAD HANDLING SYSTEM LOCATIONS." These drawings include those OHSs for which exclusions are currently employed as permitted and as described in Section 2.1-2. This provision is necessary to ensure adequate NUREG-0612 reviews of future modifications to safe shutdown equipment or the addition of new, safe-shutdown-related equipment in areas that do not currently encompass "critical" load/target interactions.

2.1-2 Overhead Handling Systems Excluded by Physical Separation

REQUEST

"Justify the exclusion of any overhead handling system from the above category by verifying that there is sufficient physical separation from any load-impact point and any safety-related component to permit a determination by inspection that no heavy load drop can result in damage to any system or component required for plant safe shutdown or decay heat removal."

2.1-2 Overhead Handling Systems Excluded by Physical Separation (continued)

TVA RESPONSE

Table II, Section A, lists the OHSs at WBN that have been determined by visual inspection to maintain sufficient distance separation from irradiated fuel and systems required for plant shutdown or decay heat removal to prevent damage to these systems. The location of these cranes, monorails, hoists, and lift eyes within buildings containing safe-shutdown equipment are shown in the Appendix A drawings to enable review of the impact of future plant modifications on the separation exclusion position taken herein.

OHSs that are not located in a building containing safety-related equipment are by definition not within the scope of NUREG-0612 concerns. Accordingly, these OHSs are not included in Appendix A drawings. However, these OHSs are included in Table II (Sections A and C) for completeness.

Table II, Section B, contains a list of OHSs at WBN which are also listed in Table I, but are excluded from special consideration in Section 2.1-3(a) because the risk of load handling accidents is mitigated by physical plant features other than distance separation. This table, as well as the Appendix A drawings delineate the NUREG-0612 program for these OHSs.

The special features listed below are defined as "hazard elimination categories" permitted by GL 81-07, Attachment 3, Section 2.4, notes to Figure 1 (Phase II).

a. Crane travel prohibited by electrical interlocks or mechanical stops.

b. System redundancy and train separation preclude the loss of system capability to perform its safe shutdown function.

c. Site specific considerations eliminate concern for the specific load/target combination.

d. Handling system meets NUREG-0612, Section 5.1.6 requirements, i.e., single failure proof.

e. Analysis demonstrates that target is protected by intervening structures.

f. Analysis demonstrates that target will accept load impact without sustaining damage sufficient to impact system performance.

2.1-2 Overhead Handling Systems Excluded by Physical Separation (continued)

Table II, Section C, lists those manual handling systems using either monorails or permanent lifting eyes that are excluded from Table I and Table II, Sections A and B, due to their inherently lower risk design. Manual-handling systems offer substantially lower risk of handling accidents due to the absence of electrical controls and electro-mechanical motion limiting devices. Manual hoists are listed in Table II, Section C for completeness, and for consistency with TVA's initial submittal for WBN. This position is considered to be consistent with NUREG-0612 goals as defined in Section 2.1 (Phase I) of GL 81-07.

Approximately 27 plant-handling systems are excluded from the attached tables because they are load-rated less than 2059 pounds and are outside the scope of a NUREG-0612 risk.

2.1-3 Compliance with NUREG-0612 Guidelines

REQUEST

"With respect to the design and operation of heavy load handling systems in the containment and the spent fuel pool area and those load-handling systems identified in 2.1-1 above, provide your evaluation concerning compliance with the guidelines of NUREG-0612, Section 5.1.1. The following specific information (Request 2.1-3(a) through 2.1-3(g)) should be included in your reply."

TVA RESPONSE

TVA's evaluation of compliance with NUREG-0612 for WBN is presented in the following responses to the specific requests for information (Sections 2.1-3(a) through 2.1-3(g)).

2.1-3(a) Fuel and Equipment Locations and Safe Load Paths

REQUEST

Drawings or sketches sufficient to clearly identify the location of safe load paths, irradiated fuel, and safe shutdown equipment.

TVA RESPONSE

"Potential Interaction Areas" (plant areas serviced by a particular OHS in which a load drop may result in damage to safe shutdown or decay heat removal equipment or irradiated fuel) are identified, where applicable, for the OHS listed in Table I. Heavy loads handled by these OHS are transported whenever possible outside of the identified critical lift zones. OHS locations and potential interaction areas are

2.1-3(a) Fuel and Equipment Locations and Safe Load Paths (continued)

described on drawings 44W411-1 through -10 as discussed previously in the response to Section 2.1-1.

"Safe load paths" are established and also identified where possible, for loads handled within critical lift zones to ensure safe load handling during plant maintenance and normal plant operation.

Each OHS listed in Table I and not excluded in Table II, Section B, is described below with a discussion of its safe load paths and unique plant features.

1. Reactor Building Polar Crane (1/2-CRN-271-R1)

The area in the Reactor Building serviced by this crane, along with the associated critical lift zone, is shown on drawing 44W411-7. The polar crane travels the entire diameter of the Reactor Building above Elevation 820.0' inside the polar crane wall. The polar crane has the potential for heavy load drops directly onto the reactor vessel, and above intervening slabs housing the steam generators, reactor coolant pumps and piping, and main steam lines. Because the ice condenser reduces available handling space, the safe load area above Elevation 757.0' in the Reactor Building is limited to the area directly inside the equipment hatch in the area of the reactor coolant pump motor cart rail system. Load drop analyses were performed for Elevation 757.0' operating floor and established that some heavy loads could result in unacceptable damage to the slab due to the extreme lift heights required for those loads. TVA has provided enhanced design to mitigate the risk of a drop incident by designing lift devices with redundant load paths, i.e., four legs and four attachment points, wherever possible.

The safe load paths (shown in appendix A) for small and miscellaneous loads avoids passage, when practical, directly over the reactor when the missile shields are removed. Large, heavy loads are carried over the reactor after the missile shield (PC-1) is replaced, providing load drop protection for the reactor and its fuel.

The missile shields in the installed position and the Elevation 757.0' floor structure are shown by analysis to withstand a load drop of a reactor coolant pump motor from modest heights (up to 8 feet) (Reference 4.1). WBN SSP-6.06 (Reference 3.13) requires heavy loads to be transported as close to the target slab as is practical (typically 1-2 feet), mitigating the effects of a handling system failure.

2.1-3(a) Fuel and Equipment Locations and Safe Load Paths (continued)

2. Auxiliary Building Overhead Crane (0-CRN-271-A1)

The Auxiliary Building crane is shown on drawing 44W411-5 along with critical lift zones and safe load paths. A safe load area exists north of the spent fuel pool where slab spalling below Elevation 757.0' floor is not currently a safety concern due to the absence of safe-shutdown equipment below Elevation 757.0'. This area encompasses the fuel receipt and inspection area and the new fuel storage vault.

Load drop analyses (Reference 4.2) have been performed for Elevation 757.0' floor, using the 50-ton containment hatch shield blocks as a limiting case. The analysis shows that Elevation 757.0' floor slabs are able to withstand a load drop from a height of 12 inches. Therefore procedures require heavy loads to be transported as close to the floor as is practical, mitigating the affects of a handling system failure.

The containment hatch shield blocks must be raised from their installed position to clear a retaining structure, moved laterally 3-4 feet, and then lowered to within approximately 12 inches of the refueling floor. The handling risk is highest while lifting these blocks out of the retaining structure, where a load hang-up and, consequently, a lifting device overload condition could develop. Once a block is raised to clear the retaining structure and the main hoist brakes are observed to be adequately controlling the load, the block is relocated laterally. The Auxiliary Building crane is redundantly reeved, designed with dual brakes and gearing, dynamic load braking, and is handling less than 50% of its capacity for this lift. Therefore, the potential for a load handling incident is minimal.

The spent fuel storage area is protected from the approach of heavy loads with a combination of independent limit switches and electro-mechanically actuated stop devices. These devices prohibit the passage of the Auxiliary Building crane hook in the area of stored irradiated fuel.

3. Intake Pumping Station (IPS) Crane (0-CRN-270-I1)

The IPS crane is shown on drawing 44W411-10 along with applicable critical lift zones. Also, shown is the safe load path providing the shortest route across the IPS roof area, taking advantage of existing vertical wall structures and missile shields to mitigate the effects of a potential load drop incident. A decision was made not to employ the strategy of full extension of the crane boom to

2.1-3(a) Fuel and Equipment Locations and Safe Load Paths (continued)

carry some loads outside the perimeter of the building structure. Handling loads with full boom extension generates increased load moments and is considered a nonconservative operating mode. Increasing boom angle and retracting the boom reduce moment loads and increases associated safety factors.

In addition, a load drop calculation (Reference 4.3) demonstrates that the IPS tornado missile shields can withstand a heavy load drop from modest heights (typically 12-14 feet). WBN SSP-6.06 requires heavy loads from the IPS to be transported as close to the top of the installed missile shields as is practical (typically 1-2 feet), mitigating the effects of a handling system failure.

Plant equipment and systems in the IPS are redundant and cross-connected, assuring against loss of safe-shutdown capabilities subsequent to any credible load drop incidents, followed by appropriate operator action.

4. Reactor Building Floor Hatch Jib (1/2-CRN-078-0015)

This 3-ton jib crane is installed near the Reactor Building equipment hatch on Elevation 757.0' specifically to move tools and materials to the lower elevations of the Reactor Building for routine maintenance. It has limited capacity and reach, and its use is administratively controlled. Movement of loads inside the crane wall, i.e., in the vicinity of the refueling pool and transfer canal, is restricted to reactor internals service tools. Safe load paths are described on drawing 44W411-7. Load transfer to the lower elevations of the Reactor Building during refueling outages has been reviewed for impact on safe-shutdown systems. No potential exists for damage to safe-shutdown systems.

5. Remaining Monorail Overhead Handling Systems

For the remaining monorail type OHSs listed in Table I and not excluded in Table II, Section B, the establishment of critical lift zones and safe load paths is limited to relatively narrow linear zones along the paths of single monorails, where interaction is generally limited to the system undergoing repair. Locations of the Unit 1 and Common monorail/OHSs with respect to plant shutdown equipment, decay heat removal equipment, or spent fuel storage areas are shown on the WBN 44W411 drawing series.

2.1-3(b) Handling Procedures and Procedural Deviations

REQUEST

"A discussion of measures taken to ensure that load-handling operations remain within safe load paths, including procedures, if any, for deviation from these paths."

TVA RESPONSE

Through the use of administrative controls, provided in WBN SSP-6.06, heavy loads are transported along the "safe load paths" identified in response to REQUEST 2.1-3(a) above. Deviations to these safe load paths require prior Plant Operation Review Committee (PORC) approval. The safe load paths will be procedurally identified for each OHS or load near plant safe-shutdown and decay heat removal equipment or where irradiated fuel is stored. As a visual aid to the crane operator, the safe load paths will be marked on the floor, or a rigger cognizant of the applicable safe load paths will be responsible to direct the operator to ensure that the load is transported along the safe load path. A prelift meeting will be conducted by the designated lift supervisor with crane operator and flagger(s). Recommended floor marking methods, if utilized, are described in the NUREG-0612 drawing 44W411-9.

It may be necessary to transport unanticipated heavy loads over or near plant safe-shutdown or decay heat removal equipment or irradiated fuel. In these cases, SSP-6.06 will require special precautions, procedures, and/or instructions be utilized for the purpose of minimizing the risk of a heavy load drop. Specifically, rigging rated for twice the weight of the load will be utilized in addition to limiting the load to 50% of the hook capacity. If this approach is not utilized, or other unusual circumstances associated with the lift warrant concern, review by a qualified engineer is required. Specialized rigging design or other comparable measures may result from this review. Table III identifies each anticipated NUREG-0612 load and lists the Maintenance Instruction (MI) applicable to each load. These procedures, along with the requirements of WBN SSP-6.06 provide load drop prevention measures,including a list of required equipment, inspections, sequence of steps, acceptance criteria for the movement of the load, etc. A "safe load path" is established with the purpose of transporting equipment adjacent to safe-shutdown or decay heat removal equipment or spent fuel via the safest and shortest route to the nearest "safe load area." The load is then transported within the "safe load area" to its final destination. Safe load paths are identified on WBN drawings 44W411-1 through -10 (Appendix A).

2.1-3(b) Handling Procedures and Procedural Deviations (continued)

Engineering Administrative Instruction (EAI) 7.01 (Reference 3.14) provides for ongoing review for compliance with NUREG-0612 guidelines for both new heavy loads and safe load paths, and for new installed commodities in the travel path of heavy loads.

2.1-3(c) Heavy Load Tabulation with Procedure References

REQUEST

"A tabulation of heavy loads to be handled by each crane which includes the load identification, load weight, its designated lifting device, and verification that the handling of such load is governed by a written procedure containing, as a minimum, the information identified in NUREG-0612, Section 5.1.1(2)."

TVA RESPONSE

Table III lists the OHS identified in Table I including the major loads projected to be lifted by each OHS. Also included is the design weight of each of the loads identified. As stated in the response to REQUEST 2.1-3(b), special precautions, procedures, and/or instructions are utilized when handling these loads over or near safe-shutdown equipment, decay heat removal equipment, or irradiated fuel locations. Table III identifies the applicable procedures and the designated lifting device/device identification (ID). WBN load-handling procedures meet the requirements of NUREG-0612, Section 5.1.1(2), as described in the response to 2.1-3(b) above.

2.1-3(d) Lifting Device Compliance

REQUEST

"Verification that lifting devices identified in Request 2.1-3(c) above comply with the requirements of ANSI-B30.9, or ANSI-N14.6 as appropriate. For lifting devices where these standards, as supplemented by NUREG-0612, Section 5.1.1(4) or 5.1.5(5) are not met, describe any proposed alternatives and demonstrate their equivalency in terms of load-handling reliability."

TVA RESPONSE

WBN lifting devices for the loads identified in response to REQUEST 2.1-3(c) above comply with the intent of ANSI-B30.9 (Reference 3.6) or ANSI-N14.6 (Reference 3.10), as applicable. Compliance with appropriate industry standards at WBN is assured through implementation of Watts Bar Nuclear Engineering Requirements (ER) Specification N3M-940 (Reference 3.12). WBN lifting devices have been reviewed

2.1.3(d) Lifting Device Compliance (continued)

against the requirements of the ER Specification, and design discrepancies have been identified. Resolution of unresolved discrepancies will occur prior to the initial use of the device after fuel load. The ER Specification serves to consolidate and clarify the applicable ANSI requirements, as well as the "Guidelines" of NUREG-0612, Sections 5.1.1(4) and 5.1.1(5).

The NRC guideline for design consideration of dynamic loads imposed on lifting devices is identified in NUREG-0612, Section 5.1.1(5).

This guideline is addressed by TVA in the ER Specification and is satisfied in the design of lifting devices through the application of a generic design factor of 15 percent. A 15 percent design factor is consistent with CMAA Specification 70 (Reference 3.11) guidelines for crane design, and envelops cranes at WBN with the exception of the IPS pedestal crane. Since the intake pumping station (IPS) crane design hoisting speed is 40 fpm, a 20 percent dynamic factor is included in lifting device design for this crane.

Reactor vessel head and reactor internals lifting rigs meet the intent of ANSI N14.6-1986 and NUREG-0612 for design, fabrication, assembly, and operation. An analysis of these devices is provided in Westinghouse WCAP-10313 (Reference 3.15).

Periodic inspection of the Westinghouse lift rigs will utilize acoustic emission technology currently approved for use by NRC at the TVA's Sequoyah Nuclear Plant (SQN) (Reference 3.16). Initial testing will be performed before initial fuel load with periodic inspection to follow at 10 year intervals. All other lifting devices may utilize acoustic emission testing or other techniques which comply with ANSI N14.6 at 10 year intervals following fuel load.

2.1-3(e) Overhead Crane Maintenance/Testing per ANSI B30.2

REQUEST

"Verification that ANSI B30.2-1976, Chapter 2-2, has been invoked with respect to crane inspection, testing and maintenance. Where any exception is taken to this standard, sufficient information should be provided to demonstrate the equivalency of proposed alternatives."

TVA RESPONSE

Applicable sections of ASME/ANSI B30.2, B30.5, B30.11, and B30.16 (Reference 3.4, 3.5, 3.7, and 3.9, respectively) have been invoked with respect to crane inspection, testing, and maintenance by WBN SSP-6.06.

2.1-3(f) Overhead Handling System Design Compliance

REQUEST

"Verification that crane design complies with the guidelines of CMAA Specification 70 and Chapter 2-1 of ASME/ANSI B30.2 (1976), including the demonstration of equivalency of actual design requirements for instances where specific compliance with these standards is not provided."

TVA RESPONSE

For two load-handling systems identified in Table I, the Reactor Building and Auxiliary Building cranes, the crane design complies with the guidelines of CMAA Specification 70 and Chapter 2-1 of ASME/ANSI B30.2(1976) as summarized in Table IV. The IPS crane design complies with the guidelines of Chapter 5-1 of ASME/ANSI B30.5-1989, and is summarized in Table IV. Monorail cranes throughout the Auxiliary Building comply with the guidelines of ASME/ANSI B30.11-1980, Chapter 11-1. Within Table IV, compliance to a particular section of the applicable standard is indicated by a (C).

Subsections of the standard are reviewed, including a comparison to the requirements of ANSI B30.2. An asterisk (*) is used to identify those subsections essential to load drop integrity.

2.1-3(g) Overhead Handling System Operator Qualification

REQUEST

"Exceptions, if any, taken to ASME/ANSI B30.2 (1976) with respect to operator training, qualification, and conduct."

TVA RESPONSE

No exceptions to ASME/ANSI B30.2 (1988) or other applicable ASME/ANSI Standards with respect to operator training, qualifications, and conduct have been taken. WBN SSP-6.06 invokes the training, qualification, and conduct requirements found in applicable ASME/ANSI Standards.

3.0 REFERENCES

3.1 NRC Generic Letter 81-07 dated February 3, 1981, concerning "Control of Heavy Loads."

3.2 NRC Generic Letter 85-11 dated June 11, 1985, "Completion of Phase II of 'Control of Heavy Loads at Nuclear Power Plants' NUREG-0162."

3.3 NUREG-0612 issued June 1980, "Control of Heavy Loads at Nuclear Power Plants," provided to the utilities by letter dated December 22, 1980.

3.4 ASME/ANSI B30.2 (1988) - "Overhead and Gantry Cranes (Top Running Bridge, Single or Multiple Girder, Top Running Trolley Hoist)."

3.5 ASME/ANSI B30.5 (1990) - "Mobile and Locomotive Truck Cranes."

3.6 ASME/ANSI B30.9 (1990) - "Slings."

3.7 ASME/ANSI B30.11 (1988) - "Monorails and Underhung Cranes."

3.8 Deleted.

3.9 ASME/ANSI B30.16 (1987) - "Overhead Hoists (Underhung)."

3.10 ASME/ANSI N14.6-1986 - "Special Lifting Devices for Shipping Containers Weighing 10,000 Pounds (4500 kg) or More."

3.11 CMAA Specification No. 70 (1983) - "Specification for Electrical Overhead Traveling Cranes."

3.12 WBN Engineering Requirements Specification N3M-940, "Design and Procurement of Lifting Devices."

3.13 WBN Site Standard Practice SSP-6.06, "Safe Practices for Operation of Overhead Handling Equipment."

3.14 WBN Engineering Administrative Instruction EAI-7.01, "Modification Review for NUREG-0612 Compliance."

3.15 H. H. Sandner, "Evaluation of the Acceptability of the Reactor Vessel Head Lift Rig, Reactor Vessel Internals Lift Rig, Load Cell, and Load Cell Linkage to the Requirements of NUREG-0612," WCAP-10313 dated June 1983.

3.16 NRC letter to TVA, Sequoyah Nuclear Plant Acoustic Emission Testing of Lift Rigs, dated October 1, 1991 (A02 911007 002).

3.17 Response letter (WAT-D-8758) from Westinghouse (T32 920213 801), "Spent Fuel Pool Load Limit and Spent Fuel Pit Bridge Load Monitor Setpoints."

4.0 REFERENCE CALCULATIONS

4.1 WCG-1-43 MEDS (WBP 830722 147) - "Reactor Building Operating Deck."

4.2 WCG-1-80 MEDS (WBP 830720 008) - "Elevation 757.0' Floor Slab, Auxiliary Building."

4.3 85-K-00003 MEDS (WBP 830720 007) - "Intake Pumping Station (concrete)."

TABLE I
OVERHEAD HANDLING SYSTEM WITH POTENTIAL LOAD/TARGET INTERACTION
2.1-1 Response

Plant Tag Number	Handling System Drawing No.	Type	Location (Bldg/Elev)	Load Description (Capacity)
CRANES NEAR IRRADIATED FUEL				
1-CRN-271-R1 2-CRN-271-R1	44N230-237	Polar Bridge Crane	RB-820.0'	Reactor Building (RB) (175T/35T) Refueling/Maintenance Loads
0-CRN-271-A1	44N300-305	AB Bridge Crane	AB-789'6"	Auxiliary Bldg (AB) (125T/1OT) Refueling/Maintenance Loads
CRANES NEAR SAFE-SHUTDOWN EQUIPMENT				
0-CRN-270-I1	34N310	Hydraulic Pedestal Crane	IPS-754.0'	Intake Pumping Station (IPS) (20 Ton) Maintenance Loads
1-CRN-078-0015 2-CRN-078-0015	44N384 MK-1	Jib Crane	RB-757.0'	RB Floor Hatch (3 Ton) Misc. Maintenance Loads
Manual Hoist	44N387 MK-6, 9, 10(1)	Movable Monorail	AB-676.0'	RHR Pumps/Motors 1A-A, 1B-B, 2A-A, 2B-B (8 Ton/Pair of Hoists)
0-HST-271-AB18	44N387 MK-11	Monorail	AB-676.0'	Waste Evaporator Feed Filter Cask (5 ton)
0-HST-271-AB16	44N388 MK-2	Monorail	AB-692.0'	Refueling Water Purification Filter Cask (5 Ton)
0-HST-271-AB11 0-HST-171-AB14	44N389 MK-1	Monorail	AB-782.0'	Rod Drive M-G Sets (4 Ton)
0-HST-271-AB6 0-HST-271-AB8	44N389 MK-2(2)	Monorail (Trolley only)	AB-757.0'	Letdown Heat Exchanger (3 Ton) Floor Plug (2.3 Ton) (Manual Hoist/Power Trolley)
0-HST-271-AB7 0-HST-271-AB9	44N389 MK-3	Monorail	AB-772.0'	MCC Room Hatches (Misc Matl)
0-HST-271-AB13	44N389 MK-8	Monorail	AB-737.0'	Spent Fuel Pool Filter Cask (5 Ton)
0-HST-271-AB19	44N389 MK-11(2)	Monorail	AB-713.0'	Boric Acid Tank Filter Cask (5 Ton)

TABLE I
OVERHEAD HANDLING SYSTEM WITH POTENTIAL LOAD/TARGET INTERACTION
2.1-1 Response

Plant Tag Number	Handling System Drawing No.	Type	Location (Bldg/Elev)	Load Description (Capacity)
Manual Hoist	44N1276-3 MK-7A[3]	Lifteyes	AB-737.0	Spent Fuel Pool Heat Exchanger (5.3 Ton) Heat Exchanger Tube Bundles (3.3 Ton)

NOTES:

(1) This manual handling system is included in Table I because of the proximity of the cross-connect pipe to the opposite Residual Heat Removal (RHR) train when the RHR motor is initially lifted from the pump casing for service. Subsequent movement of the motor is directly away from the potential target.

(2) Manual hoists/trolleys where a unique trolley and/or hoist is not furnished. (Trolley and/or hoist is provided from the tool room.)

(3) This manual handling system is included in Table I because of the proximity of both trains of spent fuel cooling during repair processes to either spent fuel pool heat exchanger. Repair of either heat exchanger requires special precautions described by an approved procedure and specially engineered load handling equipment.

TABLE II/SECTION A
HANDLING SYSTEMS EXCLUDED BY INSPECTION
2.1-2 RESPONSE

Plant Tag Number	Handling System Drawing No.	Type	Location (Bldg/Elev)[2]	Load Description (Capacity)	Exclusion[1] Category
1-CRN-270-T1 2-CRN-270-T1	44N200-202	Bridge Crane	TB-799.0'	Main Turbine & Assoc Equipment (200T/25T)	Separation (S) (Determined by Visual Inspection)
1-CRN-270-T6	44N207	Single Girder	TB-729.0'	Misc. Equipment Hatch (10 Ton)	(S)
1-CRN-270-T3 2-CRN-270-T3	44N209	Bridge Crane	TB-782.0'	Main Turbine & Assoc. Equipment (15 Ton)	(S)
0-CRN-270-S1	44N220	Single Girder	SB-748.0'	Machine Shop Misc. (5 Ton)	(S)
0-CRN-077-001	44N306	Single Girder	RW-729.0'	Waste Packaging (6 Ton)	(S)
0-CRN-271-RR6	44N307	Single Girder	AB-729.0'	Waste Handling (6 Ton)	(S)[1]
1-CRN-270-T7 2-CRN-270-T7	44N376 MK-1	Monorail	TB-708.0'	Hotwell Pumps (10 Ton)	(S)
1-CRN-270-T5 2-CRN-270-T5	44N377 MK-1	Monorail	TB-708.0'	Feedwater Pump & Turbine (10 Ton)	(S)
0-HST-270-T9	44N378 MK-3	Monorail	TB-729.0'	Turbine Building High crud Hatchway (5 Ton)	(S)
0-HST-271-AB20	44N388 MK-1	Monorail	AB-692.0'	Evaporator Concentrates Filter Cask (5 Ton)	(S)[1]
0-HST-271-AB10 0-HST-271-AB12	44N389 MK-6	Monorail	AB-737.0'	CVCS Filter Cask (5 Ton)	(S)[1]
0-HST-271-AB3	44N389 MK-10	Monorail	AB-737.0'	SFP & Evaporator Filter Cask	(S)[1]
0-HST-271-AB45	44N389 MK-16	Monorail	AB-737.0'	Misc. Demineralizers (5 Ton)	(S)[1]
0-HST-271-AB15	44N392 (4 ea)	Monorail	AEB-786.0'	Package Chiller (5 Ton one hoist only)	(S)
0-HST-249-1	44N391 MK-1	Monorail	WEB-773.0'	CDWE Equipment (5 Ton)	(S)

TABLE II/SECTION A
HANDLING SYSTEMS EXCLUDED BY INSPECTION
2.1-2 RESPONSE

Plant Tag Number	Handling System Drawing No.	Type	Location (Bldg/Elev)[2]	Load Description (Capacity)	Exclusion[1] Category
0-HST-249-2	44N391 MK-2	Monorail	WEB-773.0'	CDWE Separator (3 Ton)	(S)
0-HST-249-3	44N391 MK-3	Monorail	WEB-773.0'	CDWE Recirc Pump (3 Ton)	(S)
0-HST-249-4	44N391 MK-4	Monorail	WEB-773.0'	CDWE Heat Exchanger (3 Ton)	(S)
0-CRN-270-T8	44N394-6 MK-1/2	Jib	TB-685'6"	High Crud Filter Jib (6 Ton)	(S)
Manual Hoist	44N394-6 MK-5	Monorail	TB-704'9"	High Crud Filter (1-1/2 Ton)	(S)
0-HST-270-C1	44N395 MK-1/2	Monorail	CB-708.0'	Mechanical Equip Room (Misc. Matl.) (2 Ton)	(S)[1]
0-HST-270-1A 0-HST-270-1B 0-HST-270-2A 0-HST-270-2B	44N401	Monorail	TB-708.0'	Condenser Tube Handling Hoists 1A, 1B, 2A, 2B (10 Ton)	(S) (S) (S) (S)
1-HST-271-ST1 2-HST-271-ST1 1-HST-271-ST2 2-HST-271-ST2 1-HST-271-ST3 2-HST-271-ST3	1772E39 (Westinghouse)	Monorail	RB-727.0'	Stud Tensioner Hoist (2 Ton)	(S)[1]

NOTES:

(1) This OHS is included in the NUREG-0612 Design Review Program to ensure continuing evaluation of interaction areas in the event of future modifications in this area.

(2) AB - Auxiliary Building
CB - Control Building
RB - Reactor Building
SB - Service Building
TB - Turbine Building
RW - Radwaste Building
AEB - Auxiliary Equipment Building
WEB - Waste Evaporator Building

TABLE II/SECTION B
HANDLING SYSTEMS EXCLUDED PER SECTION
2.4 OF GL 81-07

Plant Tag Number	Handling System Drawing No.	Type	Location (Bldg/Elev)	Load Description (Capacity)	Exclusion[1] Category
1-CRN-78-1EH 2-CRN-78-1EH	44N250	Stationary Hoist	RB-757.0'	Containment Hatch Hoist	(C)
0-CRN-270-I1	34N310	Pedestal Crane	IPS-754.0'	Intake Pumping Station (20 Ton Hydraulic)	(B) (E)
1-CRN-078-0015 2-CRN-078-0015	44N384 MK-1	Jib	RB-757.0'	RB Floor Hatch Jib Crane (3 Ton)	(C) (S)
Manual Hoists	44N387 MK-6,9,10[2]	Movable Monorail	AB-676.0'	RHR Pumps/Motors 1A-A, 1B-B, 2A-A, 2B-B (8 Ton/Pair of Hoists)	(C) (D)[2]
0-HST-271-AB18	44N387 MK-11	Monorail	AB-676.0'	Waste Evaporator Feed Filter Cask (5 Ton)	(B)
0-HST-271-AB16	44N388 MK-2	Monorail	AB-692.0'	Refueling Water Purification Filter Cask (5 Ton)	(B)
0-HST-271-AB11 0-HST-271-AB14	44N389 MK-1	Monorail	AB-782.0'	Rod Drive M-G Sets (4 Ton)	(C) (E)
0-HST-271-AB7 0-HST-271-AB9	44N389 MK-3	Monorail	AB-757.0'	MCC Room Hatches (Misc Matl) (6 Ton)	(S)
0-HST-271-AB13	44N389 MK-8	Monorail	AB-737.0'	Spent Fuel Pool Filter Cask (5 Ton) and Shield Plate (4.2 Ton)	(B)(E)
0-HST-271-AB19	44N389 MK-11	Monorail	AB-713.0'	Boric Acid Tank Filter Cask (5 Ton)	(S)
Manual Hoist[3]	44N389[3]	Monorail	AB-713.0'	Component Cooling Water Pumps 2B-B, Common Spare (4 Ton)	(C)[3]

TABLE II/SECTION B
HANDLING SYSTEMS EXCLUDED PER SECTION
2.4 OF GL 81-07

Plant Tag Number	Handling System Drawing No.	Type	Location (Bldg/Elev)	Load Description (Capacity)	Exclusion[1] Category
1-CRN-78-M1 2-CRN-78-M1	22257-4 (Westinghouse/Stearns)	Gantry	RB-757.0'	Refueling Machine	(C)
0-CRN-78-1	7248D31 (Westinghouse)	Gantry	RB-757.0'	Spent Fuel Pit Crane	(C)[4]
1-CRN-61-1BC 2-CRN-61-1BC	(Westinghouse)	Special Bridges	RB-757.0'	Ice Condenser Plenum Bridge Crane (3 Ton)	(C)[5]

NOTES:

(1) Exclusions permitted after load/target interaction review per Section 2.4 of GL 81-07.

Type A - Crane travel prohibited by electrical interlocks or mechanical stops.
B - System redundancy and train separation preclude the loss of system capability to perform its safe shutdown function.
C - Site specific considerations eliminate concern for the specific load/target combination.
D - Handling system meets NUREG-0612 Section 5.1.6 requirements, i.e., single failure proof.
E - Inspection demonstrates that target is sufficiently protected by intervening structures.
F - Inspection demonstrates that target will accept load impact without sustaining damage sufficient to impact system performance.

(2) This manual handling system is included in Table I and Table II Section B because of the proximity of the cross-connect pipe to the opposite RHR train when the RHR motor is initially lifted from the pump casing for service. Subsequent movement of the motor is directly away from the potential target. The initial lift meets NUREG-0612 guidelines for single-failure-proof design, i.e., design stress factors greater than 10.0. Subsequent handling away from the potential target provides reduced risk due to separation by additional distance.

(3) Manual hoists/trolleys where a designated trolley and/or hoist is not furnished. (Trolley and/or hoist is provided from the tool room.)

(4) The spent fuel pit bridge crane is equipped with a monorail supported electric hoist rated for 4000 pounds, however, this hoist is administratively limited to loads not exceeding 2259 pounds (includes a 200 pound instrument tolerance) (per Technical Requirements TRM 3.9.4) and is not authorized for general hoisting.

(5) This crane services the ice condenser for maintenance of air handling units and replenishing flake ice and is not in service during reactor operation.

TABLE II/SECTION C
MANUAL HANDLING SYSTEMS EXCLUDED BY DEFINITION[1]
2.1-2 RESPONSE

Handling System ID. (TVA Drawing No.)	Type	Location (Bldg/Elev)	Description (Capacity)	Plant Tag Number	Exclusion[1] Category
44N375 MK-1/2	Monorail	TB-708.0'	Feedwater Heat Exchanger U1/2 (8 Ton)	Manual Hoist	
44N375 MK-2	Monorail (6 Ton Rail)	AB-692.0'	Positive Displacement Charging Pumps U/1,2 (8 Ton Hoist) (Motor-1250/GYROL-1800)	Manual Hoist	
44N377 MK-2/3	Monorail	TB-680.0'	Heater Drain Pumps U1/2 (5 Ton)	Manual Hoist	
44N378 MK-1/2	Monorail	TB-685.0'	Condenser Vacuum Pumps 1A, 1B, 2A, 2B (5 Ton)	Manual Hoist	
44N380 MK-9	Monorail	SB-741.0'	Machine Shop (3 Ton)	Manual Hoist	
44N380 MK-11	Monorail (Trolley only)	SB-713.0'	Machine Shop (3 Ton)	Manual Hoist	
44N380 MK-12	Monorail (Trolley only)	SB-713.0'	Machine Shop (3 Ton)	Manual Hoist	
44N387 MK-3/4[2] (44N388)	Monorail	AB-692.0'	Safety Injection Pumps 1A-A, 1B-B, 2A-A, 2B-B (2 Ton)	Manual Hoist	
44N387 MK-7/10 (44N388)	Monorail	AB-692.0'	Centrifugal Charging Pumps 1A, 1B, 2A, 2B (4 Ton)	Manual Hoist	
44N387 MK-10[2] (48N1276-1, MK-7B)	Lifting Eyes 4/Pump	AB-676.0'	CTMT Spray Pumps 1A-A, 1B-B, 2A-A, 2B-B (4 Ton each)	Manual Hoist	
44N389 MK-4	Monorail	AB-737.0'	CVCS Demineralizers (5 Ton)	Manual Hoist Integral Trolley	
44N389 MK-14/15	Monorail	AB-713.0'	Decon Room (Misc) (3 Ton)	Manual Hoist	
44N389[2]	Monorail (4 Locations)	AB-713.0'	Motor Driven Auxiliary Feedwater Pump 1A-A, 1B-B, 2A-A, 2B-B (2 Ton)	Manual Hoist	

TABLE II/SECTION C
MANUAL HANDLING SYSTEMS EXCLUDED BY DEFINITION[1]
2.1-2 RESPONSE

Handling System ID. (TVA Drawing No.)	Type	Location (Bldg/Elev)	Description (Capacity)	Plant Tag Number	Exclusion[1] Category
44N389[2]	Monorail (4 Locations)	AB-713.0'	Component Cooling Water Pumps 1A-A, 1B-B, 2A-A, 2B-B Common Spare, (5 Pumps/4 Ton)	Manual Hoist	
44N392[2]	Lift Eyes (6 ea)	AEB-775.0'	Ice Machines	Manual Hoist	
48N1276-1 MK-7C[2]	Lift Eyes	AB-692.0'	Turbine Driven Auxiliary Feedwater Pumps 1A, 2A (4 Ton Each)	Manual Hoists	
48N1276-3 MK-7A	Lift Eyes	AB-737.0'	Spent fuel pool heat exchanger (5.3 Ton) Heat Exchanger Tube Bundles (3.3 Ton)	Manual Hoists	

NOTES:

(1) Manual hoists are excluded from consideration when reviewing load/target interactions based on the reduced risk of a load-handling accident due to uncontrolled load motions attributable to control and interlock failures of powered hoists. Manual hoists are listed here only for purposes of completeness.

(2) Manual hoists/trolleys where a unique trolley and/or hoist is not furnished. Trolley and/or hoist is provided from the tool room.

TABLE III
NUREG-0612 OHS, ASSOCIATED LOADS AND LIFT DEVICES
2.1-3a, 3b, and 3c RESPONSE

Load Number[10]	Load Description (Wt-Ton)[6]	Lifting Device Number	Handling Procedure[8]	Safe Load Path Drawing/Sheet
Lift System ID 1-CRN-271-R1 2-CRN-271-R1				
R1 (3ea)	Canal gate PC-3, 4, 5 (41 Ton)	LD-1 (Step 3a)[9] LD-1/2 (Step 3b)	MI-68.01	44W411-7
R2	RV Missile Shield PC-1 (92 Ton)+(3.3 Ton)	LD-2	MI-68.01	44W411-7
R3	RV Missile Shield PC-2 (73 Ton)+(3.3 Ton)	LD-2	MI-68.01	44W411-7
R4	RV Missile Shield PC-6 (56 Ton)+(3.3 Ton)	LD-3	MI-68.01	44W411-7
R5 (4ea)	Reactor coolant pump plug (13.3 Ton)	LD-4	MI-271.09	44W411-7
R6	EL. 757' hatch plug (10 Ton)	LD-4	MI-271.09	44W411-7
R7	Reactor vessel head (141.2 Ton)+(4.6 Ton)	LD-5	MI-68.01	44W411-7
R8	RV upper internals (83.6 Ton)+(9.3 Ton)	LD-6	MI-68.01	44W411-7
R9	RV lower internals (126.5 Ton)+ (9.3 Ton)	LD-6	MI-68.03	44W411-7
R10 (4 ea)	RC pump motor (36.3 Ton)+ (1.5 Ton)	LD-7	MI-68.05	44W411-7
R11 (4 ea)	RC pump motor stand (3.3 Ton)	LD-8	MI-68.05	44W411-7
R12 (4 ea)	Reactor coolant pump (28 Ton) Shaft/impeller	LD-9	MI-68.06	44W411-7
R13 (4ea)	RC pump flywheel (7.5 Ton)	LD-10	W.R.	44W411-7
R14 (4ea)	RCP motor rotor (8.5 Ton)	LD-11	W.R.	44W411-7
R15	Stud tensioner transport frame (loaded) (7.8 Ton)	LD-12	MI-68.01	44W411-7
R16	Stud rack (W/studs) (2.5 ton)	LD-13	MI-68.01	44W411-7
R17	RV ISI tool (SWR/PAR) (2.1/EST)	LD-14		44W411-7
R18	RB Floor Hatch (1.5 Ton)	LD-15	MI-271.09	44W411-7

TABLE III
NUREG-0612 OHS, ASSOCIATED LOADS AND LIFT DEVICES
2.1-3a, 3b, and 3c RESPONSE

Load Number[10]	Load Description (Wt-Ton)[6]	Lifting Device Number	Handling Procedure[8]	Safe Load Path Drawing/Sheet
R19	RV head lead shield blankets (36) 12 per box (2.5 Ton each box)	LD-17	MI-68.01	44W411-7
R20	Miscellaneous Materials (up to 10 Ton)	LD-17	N/A	44W411-7
R21	Miscellaneous Materials (not utilizing LD-17)	See Note 11	N/A	44W411-7
Lift System ID 1-CRN-78-0015 2-CRN-78-0015				
R18	RB Floor Hatch (1.5 Ton)	LD-15	MI-271.09	44W411-7
R20	Miscellaneous Materials (up to 3 Ton)	LD-17	N/A	44W411-7
Lift System ID 0-CRN-271-A1				
A1 (3ea)	CTMT access shield plug-A, B, C (50 Ton)	LD-21	MI-271.10	44W411-5
A2 (2ea)	Fuel pool gates (2 Ton)	LD-22	W.R.	44W411-5
A3	New fuel vault cover (3.6 Ton)	LD-23	W.R.	44W411-5
A4	Irradiated specimen shipping cask [5] (3.2 Ton)	LD-24 [5]		44W411-5
A5	New fuel container (1.7 Ton/empty, 3.3 Ton loaded)	LD-25	FHI-1	44W411-5
A6	Primary Source Rod Cask (11.5 Ton)	LD-26	FHI-12	44W411-5
A7 (3ea)	Cask decon pit cover (1.3 Ton)	LD-27	W.R.	44W411-5
A8	Radwaste drum cask (inter. level/55 gal) (6.5 Ton)	LD-28	MI-0.18	44W411-5
A9 (2ea)	Radwaste drum cask (low level/55 gal) (5 Ton)	LD-28	MI-0.18	44W411-5
A10	Radwaste drum cask (low level/30 gal)[1] (3.8 Ton)	LD-28[1]	MI-0.18	44W411-5

TABLE III
NUREG-0612 OHS, ASSOCIATED LOADS AND LIFT DEVICES
2.1-3a, 3b, and 3c RESPONSE

Load Number[10]	Load Description (Wt-Ton)[6]	Lifting Device Number	Handling Procedure[8]	Safe Load Path Drawing/Sheet
A11	Filter transfer cask (4.3 Ton)[1]	LD-29[1]	MI-0.18	44W411-5
A12 (2ea)[1]	Filter cask shield plates (4.2/2.0 Ton)	LD-30	MI-0.18	44W411-5
A13 (4ea)	CTMT spray heat exchanger plugs (10.5 Ton)	LD-31	MI-72.02	44W411-5
A14	Containment spray Heat Exchanger plug cover (1.2 Ton)	LD-31	MI-72.02	44W411-5
A15 (4ea)	RHR heat exchanger plugs (4.1 Ton)	LD-32	MI-74.02	44W411-5
A16 (4ea)[2]	CTMT spray heat exchanger 1B (21 Ton)	LD-33	MI-72.02	44W411-5
A17 (4ea)[2]	RHR heat exchanger 1B (10 Ton)	LD-34	MI-74.02	44W411-5
A25	Miscellaneous Materials	See Note 11	N/A	44W411-5
Lift System ID 0-HST-271-AB11/12				
A18 (4ea)	Rod drive MG-set (3.2 Ton)	LD-35	W.R.	44W411-6
Monorail/Manual Hoists				
A19 (5ea)[3]	CCS pump motor (1.7 Ton)[3]	LD-36	MI-70.01	44W411-3
A20	Letdown heat exchanger floor plug (1.7 Ton)	LD-31	MI-62.10	44W411-5
A21	Letdown heat exchanger shell/tube bundle (1.5 Ton)	LD-37[7]	MI-62.10	44W411-5
A22 (2ea)	Spent fuel pit heat exchanger (5.5 Ton)	LD-32	MI-78.05	44W411-4
A23 (2ea)	SFP heat exchanger Tube Bundle (3.3 Ton)	LD-38	MI-78.05	44W411-4

TABLE III
NUREG-0612 OHS, ASSOCIATED LOADS AND LIFT DEVICES
2.1-3a, 3b, and 3c RESPONSE

Load Number[10]	Load Description (Wt-Ton)[6]	Lifting Device Number	Handling Procedure[8]	Safe Load Path Drawing/Sheet
Lift System ID O-HST-271-AB-7/9				
A24	Miscellaneous Electrical Equipment	N/A	W.R.	44W411-6
Lift System ID 0-CRN-271-A1 (Reactor Building Loads Leaving Auxiliary Building)				
AR101 (4ea)	RC pump plug (R5) (13.3 Ton)	LD-4 (or use LD-34)	MI-271.09	44W411-5
AR102	EL 757' hatch plug (R6) (10 Ton)	LD-4 (or use LD-34)	MI-271.09	44W411-5
AR103	RCP motor (R10) (41.2 Ton) + (1.5 Ton)	LD-7	MI-68.05	44W411-5
AR104	Reactor coolant pump shaft/impeller (R12) (28 Ton)	LD-9 (or alternate)	MI-68.06	44W411-5
AR105	RC pump flywheel (R13) (7.5 Ton)	LD-10	W.R.	44W411-5
AR106	RCP motor rotor (R14) (8.5 Ton)	LD-11	W.R.	44W411-5
AR107	Stud tensioner transport frame/loaded (R15) (7.8 Ton)	LD-12	MI-68.01	44W411-5
AR108	Stud rack w/studs (R16) (2.5 Ton)	LD-13	MI-68.01	44W411-5
AR109	RV ISI tool (SWR/PAR) (R17) (2.1 Ton)	LD-14		44W411-5
AR110	RB floor hatch (R18) (1.5 Ton)	LD-15	MI-271.09	44W411-7
AR111	RV Head shield blankets (36) 12 per box (2.5 Ton per box) (R19)	LD-17	MI-68.01	44W411-7
Lift System ID 0-CRN-270-I1				
I-1 (12ea)	Stop logs (7.0 Ton)	LD-51	W.R.	44W411-10
I-2 (4 sets)	Traveling screens (head) (10 Ton)	LD-52	W.R.	44W411-10
I-3 (4 sets)	Traveling screens (boot) (1.7 Ton)	LD-53	W.R.	44W411-10

TABLE III
NUREG-0612 OHS, ASSOCIATED LOADS AND LIFT DEVICES
2.1-3a, 3b, and 3c RESPONSE

Load Number[10]	Load Description (Wt-Ton)[6]	Lifting Device Number	Handling Procedure[8]	Safe Load Path Drawing/Sheet
I-4 (2ea)	Screen wash pump (1.5 Ton)[4]	LD-54[4]	W.R.	44W411-10
I-5 (8ea)	ERCW pump (10.9 Ton)[4]	LD-55[4]	MI-67.01	44W411-10
I-6 (8ea)	ERCW pump motor (5 Ton)	LD-56	MI-67.03	44W411-10
I-7	Deleted			
I-8	Deleted			
I-9 (4ea)	Fire Protection pump (3.5 Ton)[4]	LD-59[4]	MI-26.22	44W411-10
I-10 (4ea)	Fire Protection pump motor (2.6 Ton)	LD-60	W.R.	44W411-10
I-11	Deleted			
I-12 (28ea)	Missile shield roof panels (7 Ton)	LD-62	W.R.	44W411-10
I-13	Miscellaneous Materials	See Note 11	N/A	44W411-10

NOTES:

(1) The filter transfer cask (All) and shield plates (A12) are utilized throughout the Auxiliary Building at each filter pit (Elevations 692.0', 713.0', and 737.0'). The handling system utilizing this device are listed below:

a. 0-HST-271-AB3
b. 0-HST-271-AB10
c. 0-HST-271-AB12
d. 0-HST-271-AB13
e. 0-HST-271-AB16
f. 0-HST-271-AB19
g. 0-HST-271-AB19
h. 0-HST-271-AB20

(2) Listed Heavy Loads have no interaction with safe shutdown targets.

a. Containment spray heat exchangers 1A (north)
b. RHR heat exchangers 1A (north)

TABLE III
NUREG-0612 OHS, ASSOCIATED LOADS AND LIFT DEVICES
2.1-3a, 3b, and 3c RESPONSE

(3) The following listed rotating equipment is normally repaired in place, with the subassemblies known to weigh less than 2059 pounds, i.e., not a "heavy load." Should the primary assembly require removal for service, a suitable lifting device meeting NUREG-0612 requirements close-up will be designed and assembled from the tool room rigging materials per ASME/ANSI B30.9, including a suitable dynamic loading factor.

a. Positive displacement charging pumps
b. Containment spray pumps
c. Centrifugal charging pumps
d. Motor driven auxiliary feedwater pumps
e. Turbine driven auxiliary feedwater pumps
f. Safety injection pumps
g. Component cooling water pumps

(4) The IPS pumps are deep well pumps and can only be dismantled from the top down (typically in 10-foot sections). Therefore, while the initial disassembly steps constitute a heavy lift ("heavy load"), no safe load path is specified, because each piece removed from the IPS weighs less than 2059 lbs.

(5) Listed heavy load is not handled until fuel cycle-5 or later, therefore design and procurement is deferred.

(6) Weights shown typically do not include a 100 to 300 pound additional load which is the master-link and sling assembly. Where the lift device is unusually heavy (incorporates heavy turnbuckles) or includes a structural load spreading beam, the lift device weight is shown in parenthesis.

(7) Letdown heat exchanger is a "Heavy Load" requiring infrequent service. Therefore, lift device design is deferred until maintenance is required.

(8) For lifts of heavy loads described in this table, Site Standard Practice SSP-6.06, "Safe Practices for Operation of Overhead Handling Equipment," is the upper-tier governing procedure referenced in Maintenance Instructions (MI) and Work Requests (WR) listed herein.

(9) Removal and storage of the refueling canal shield gates PC-3, 4, and 5 include a tilting operation per drawing 44N266. Both the main hook and the auxiliary hook are employed to rotate these vertical panels to a horizontal attitude, utilizing two lift devices, LD-1 and elements of LD-2.

(10) Reactor Building Crane lower blocks and the Auxiliary Building crane lower blocks are not listed as independent loads because each crane complies in most respects with the intent of NUREG-0554, "Single Failure Proof Cranes for Nuclear Plants," for single failure-proof design. The cranes have double reeving, dual brakes and gearing, and over-sized hooks and hook supporting structures with safety factors in excess of 10.0.

(11) Miscellaneous loads may be handled utilizing standard rigging components provided that the rigging is rated for twice the weight of the load and the crane hook used is limited to 50% of its capacity. Engineering review is required if these criteria are not met or other unusual circumstances associated with the lift warrant concern.

TABLE IV
CRANE DESIGN COMPLIANCE
VERIFICATION

Pertinent sections		Polar Crane (1)	Aux Bldg Crane (2)	Comments
CMAA-70				
1.2	Building	C	C	C - Indicates Compliance
1.3	Clearance	C	C	
1.4	Runway	C	C	
1.5	Conductors	C	C	
1.6	Rated Capacity*	C	C	
1.7	Design Stresses*	C	C	
1.9	Painting	C	C	
1.11	Testing*	C	C	Acceptance/Preop Test perform
3.1	Material*	C	C	
3.2	Welding*	C	C	TVA specifies AWS D1.1
3.3	Girders*	C	C	
3.4	Bridge Trucks*	C	C	
3.5	Footwalks, H'Rails	C	C	
3.6	Operator Cab	C	C	
3.7	Trolley Frame*	C	C	
3.8	Rails*	C	C	
4.1	Load Blocks*	C	C	
4.2	Hoist Ropes*	C	C	
4.3	Sheaves*	C	C	
4.4	Drums*	C	C	
4.5	Gearing*	C	C	AGMA
4.6	Bearings	C	C	
4.7	Brakes*	C	C	
4.8	Bridge Drives*	C	C	
4.9	Shafts*	C	C	
4.10	Couplings*	C	C	
4.11	Wheels*	C	C	
4.12	Bumpers	C	C	
5.1	Electrical	C	C	
5.2	Motors AC-DC	C	C	
5.3	Motor Brakes	C	C	
5.4	Controllers	C	C	
5.5	Resistors	C	C	
5.6	Protection	C	C	
5.7	Cab Master switch	C	C	
5.9	Hoist Limit Switch*	C	C	
5.10	Installation	C	C	
5.11	Bridge Conductors	C	C	

TABLE IV
CRANE DESIGN COMPLIANCE
VERIFICATION

Pertinent sections		Polar Crane (1)	Aux Bldg Crane (2)	Comments
ANSI B30.2 1976				
2-1.1	Marking	C	C	
2-1.2	Clearances	C	C	
2-1.3.2	Runways	C	C	
2-1.4.1	Welding*	C	C	AWS D.1.1 used Complies w/CMAA-70
2-1.4.2	Girders*	C	C	
2-1.5.1	Cables	C	C	
2-1.5.3	Access	C	C	
2-1.5.5	Fire Extinguishers	C	C	
2-1.5.6	Lighting	C	C	
2-1.6.1	Lubrication	C	C	
2-1.7.1	Footwalks	C	C	
2-1.7.2	Footwalk Const	C	C	
2-1.7.3	Handrails Toeboards	C	C	
2-1.7.4	Ladders Stairways	C	C	
2-1.7.5	Egress	C	C	
2-1.8.1	Trolley Stops	C	C	
2-1.8.2	Bridge Bumpers	C	C	
2-1.8.3	Trolley Bumpers	C	C	
2-1.8.4	Railsweeps	C	C	
2-1.8.5	Rope Guards	C	C	
2-1.8.6	Wheel and Truck*	C	C	
2-1.8.7	Guards	C	C	
2-1.9.1	Hoist Brakes*	C	C	
2-1.9.2	Holding Brakes*	C	C	
2-1.9.3	Control Braking*	C	C	
2-1.9.4	Trolley/Bridge Brakes	C	C	
2-1.9.5	Braking Means	C	C	
2-1.9.6	Brake Application Trolley	C	C	
2-1.9.7	Brake Application Bridge	C	C	
2-1.10.1	General-Elec.	C	C	
2-1.10.2	Equipment-Elec.	C	C	
2-1.10.3	Elec. Controllers	C	C	
2-1.10.4	Resistors	C	C	
2-1-10.5	Switches	C	C	
2-1.10.6	Collectors	C	C	
2-1.10.7	Receptacle	C	C	
2.1.11.1	Sheaves*	C	C	
2-1.11.2	Ropes*	C	C	
2-1.11.3	Equalizers*	C	C	
2-1.11.4	Hooks*	C	C	
2-1.12	Warning Devices	C	C	

TABLE IV
CRANE DESIGN COMPLIANCE
VERIFICATION

Pertinent Sections	Intake Pumping (3) Structure Pedestal Crane
ANSI B30.5	

* Essential to load drop integrity

Notes:

(1) Calc WBN0612-0002 - (MEB 830815 951)

(2) Calc WBN0612-0003 - (MEB 830815 952)

(3) Technical Review in Progress

TABLE V
HEAVY LOAD AND LIFTING DEVICE TECHNICAL DATA

LOAD DATA			LIFT DEVICE DATA			
Load No.	Load Description	Load Drawing	Lifting Device Number	LD Drawing	Vendor Contract	Vendor Drawing
REACTOR BUILDING						
R1	Canal gate PC-3-4-5	48W934-1	LD-1[1] (LD-1A)	44N267 MK-1 44N267 MK-5	822472	#4
R2	RV Missile Shield PC-1	48W934-2	LD-2[1]	44N267 MK-2		
R3	RV Missile Shield PC-2	48W934-2	LD-2[1]	44N267 MK-2		
R4	RV Missile Shield PC-6	48W934-2	LD-3[1]	44N267 MK-3		
R5	RC Pump Plug	48N923	LD-4[1]	44N267 MK-4	822472	#4
R6	EL 757' Hatch Plug	48N923	LD-4[1]	44N267 MK-4	822742	#4
R7	Reactor Vessel Head	1098E58	LD-5[1]	44W274	54114-1	1098E58
R8	RV Upper Internals	1141E17	LD-6[1]	44W275	54114-1	1141E17
R9	RV Lower Internals	1141E17	LD-6[1]	44W275	54114-1	1141E17
R10	RC Pump Motor	114E920/21	LD-7[2]	44N260/261	84056-1	11691100/ 01/02
R11	RC Pump Motor Stand		LD-8[2]			
R12	Reactor Coolant Pump Shaft/Impeller	114E920/21	LD-9			
R13	RC Pump Flywheel	114E920/21	LD-10			
R14	RCP Motor Rotor	114E920/21	LD-11			
R15	Stud Tensioner Transport Frame (Loaded)		LD-12[1]			
R16	Stud Rack (W/Studs)	1191F60	LD-13[1]			
R17	RV ISI Tool (PAR)	(Deferred)	LD-14	(Deferred)		
R18	RB floor hatch at JIB crane		LD-15[2]			

TABLE V
HEAVY LOAD AND LIFTING DEVICE TECHNICAL DATA

LOAD DATA			LIFT DEVICE DATA			
Load No.	Load Description	Load Drawing	Lifting Device Number	LD Drawing	Vendor Contract	Vendor Drawing
R19	RV Head shield blankets	TVA RVHS-2-8	LD-17[2]			
AUXILIARY BUILDING						
A1	Containment Access Shield Plug A-B-C	48N1288	LD-21[1]	44N357		
A2	Fuel Pool Gates	44N331	LD-22[1]	44N332 MK-7		
A3	New Fuel Vault Cover	48N1244	LD-23[1]	44N358 MK-5	(836776)	44W353-2JRS2
A4	Irradiated Specimen Shipping Cask	Deferred	LD-24	(Deferred)		
A5	New Fuel Container (loaned from Westinghouse)		LD-25[1]	Furnished by Westinghouse		
A6	Primary Source Rod Cask (11.5 Ton)		LD-26[1]	(Provided by other)		
A7	Cask Decon Pit Cover	48N1250-2	LD-27[3]	44N354-1	836776	44W354-1JRS5
A8	Radwaste Drum Cask Inter. Level/55 Gal	44N394-3 MK-22	LD-28[2]	44N394-3 MK-10	823156 (Load Test Rqd)	9044C10
A9	Radwaste Drum Cask Low Level/55 Gal	44N394-3 MK-23	LD-28[2]	44N394-3 MK-10	823156 (Load Test Rqd)	9044C10
A10	Radwaste Drum Cask Low Level/30 Gal	44N394-4 MK-24	LD-28[2]	44N394-3 MK-10	82356	9044C10
A11	Filter Transfer Cask	44N394-3 MK-1	LD-29[1]	44N394-3 MK-10	823156	9044C10
A12	Filter Cask Shield Plate	44N394-3	LD-30[1]	44N394-3 MK-8	823156	9044C10
A13	Ctmt Spray Heat Exchanger Plugs	48N1262-1	LD-31[2]	44W354-1 MK-1	836776	44W354-1JRS5

TABLE V
HEAVY LOAD AND LIFTING DEVICE TECHNICAL DATA

LOAD DATA			LIFT DEVICE DATA			
Load No.	Load Description	Load Drawing	Lifting Device Number	LD Drawing	Vendor Contract	Vendor Drawing
A14	Ctmt Spray Heat Exchanger Plug Cover	48N1262-1	LD-31[2]			
A15	RHR Heat Exchanger Plugs	48N1262-1	LD-32[3][2]	44W354-1 MK-2	836776	44W354-1JRS5
A16	Ctmt Spray Heat Exchanger	5647	LD-33[2]	44N358 MK 1-4		
A17	RHR Heat Exchanger	CD-17811	LD-34[2]	44W352-1 MK-1	75938A	
A18	Rod Drive MG Set	105D908	LD-35[2]	44W354-2 MK-1	836776	44W354-2JRS6
A19	CCS Pump Motor	C-76564	LD-36[2]	44W354-2 MK-2	75938A	
A20	Letdown Heat Exchanger Plug	48N1262-1	LD-31[2]			
A21	Letdown heat exchanger shell/tube bundle		LD-37[2]			
A22	Spent Fuel Pool Heat Exchanger		LD-32	(Not designed/select from tool room)		
A23	SFP Heat Exchanger Tube Bundle		LD-38	(Not designed/select from tool room)		
<u>REACTOR BUILDING LOADS VIA THE AUXILIARY BUILDING</u>						
AR101	RC Pump Plug (R5)	48N923	LD-4[1]	44N267 MK-4	822472	#4
AR102	EL 757' Hatch Plug (R6)	48N923	LD-4[1]	44N267 MK-4	822742	#4
AR103	RC Pump Motor (R10)	114E920/21	LD-7[2]	44N261	84056-1	11691100/ 01/02
AR104	Reactor Coolant Pump Shaft/Impeller (R12)	114E920/21	LD-9			
AR105	RC Pump Flywheel (R13)	114E920/21	LD-10		DEFERRED	
AR106	RCP Motor Rotor (R14)	114E920/21	LD-11		DEFERRED	
AR107	Stud Tensioner Transport Frame (Loaded) (R15)		LD-12[1]		DEFERRED	

TABLE V
HEAVY LOAD AND LIFTING DEVICE TECHNICAL DATA

LOAD DATA			LIFT DEVICE DATA			
Load No.	Load Description	Load Drawing	Lifting Device Number	LD Drawing	Vendor Contract	Vendor Drawing
AR108	Stud Racks (Loaded) (R16)	1191F60	LD-13(1)		DEFERRED	
AR109	RV ISI Tool (SWR/PAR) (R17)		LD-14		DEFERRED	
AR100	RB floor hatch (R18)		LD-15(2)		DEFERRED	
INTAKE PUMPING STRUCTURE						
I-1	Stop Logs	34N300	LD-51(2)	34N350	87081	VS-34N350-00
I-2	Traveling Screens (Head)	34N210 483978-1	LD-52(3)	44W353-3 MK-10	836776/75938A	44W353-3JRS4
I-3	Traveling Screens (Boot)	483978-7	LD-53	44W353-3 MK-11	836776	44W353-3JRS4
I-4	Screen Wash Pump	H5516	LD-54(3)	44W353-1 MK-4	836776	44W353-1JRS3
I-5	ERCW Pump	1F-7872	LD-55	44W353-1 MK-2	836776	44W353-1JRS3
I-6	ERCW Pump Motor	55-397-CO5-411	LD-56(3)	44W353-1 MK-1	836776	44W353-1JRS3
I-7	(Deleted)					
I-8	(Deleted)					
I-9	Fire Protection Pump	D2081	LD-59(3)(1)	44W353-2 MK-7	836776	44W353-2JRS2
I-10	Fire Protection Pump Motor	51-812- 868-401	LD-60(1)	44W353-2 MK-5	836776	44W353-2JRS2
I-11	(Deleted)					
I-12	Missile Shield Roof Panels	38N216 thru 38N218	LD-62(1)	44W353-2 MK-8	75938A	

NOTES:

(1) LD needed for initial fuel load.
(2) LD needed at first refueling outage.
(3) Lift devices may be deleted by DCN after fuel load (AFL) and the load will be assigned to another device of equal or greater capacity, resulting in a reduction in the number of lift devices requiring special maintenance and accountability.

ENCLOSURE 1

APPENDIX A

WBN NUREG-0612 DRAWINGS 44W411-01 THROUGH -10

NUREG-0612 - OVERHEAD HANDLING SYSTEM LOCATIONS

ENCLOSURE 1

ATTACHMENTS

TVA STANDARD STD-6.6
WBN ENGINEERING SPECIFICATION N3M-940