Exelon Nuclear
200 Exelon Way
Kennett Square, PA 19348

www.exeloncorp.com

Exelon Nuclear

10 CFR 50.55a

November 8, 2007

U. S. Nuclear Regulatory Commission
Attn: Document Control Desk
Washington, DC 20555

Limerick Generating Station, Units 1 and 2
Facility Operating License Nos. NPF-39 and NPF-85
NRC Docket Nos. 50-352 and 50-353

Subject: Response to Request for Additional Information - Submittal of Relief Requests Associated with the Third Inservice Inspection (ISI) Interval

References:
1) Letter from P. B. Cowan (Exelon Generation Company, LLC) to U. S. Nuclear Regulatory Commission, dated March 6, 2007
2) Letter from P. J. Bamford (U. S. Nuclear Regulatory Commission) to C. M. Crane (Exelon Generation Company, LLC), dated October 26, 2007

In the Reference 1 letter, Exelon Generation Company, LLC requested your review of relief requests associated with the third Inservice Inspection (ISI) Interval for Limerick Generating Station (LGS), Units 1 and 2. The third interval of the LGS, Units 1 and 2 ISI program complies with the 2001 Edition through 2003 Addenda of the American Society of Mechanical Engineers (ASME) Boiler and Pressure Vessel (B&PV) Code. The third ISI interval began on February 1, 2007, and is scheduled to conclude on January 31, 2017, for LGS, Units 1 and 2.

In the Reference 2 letter, the U. S. Nuclear Regulatory Commission requested additional information. Attached is our response.

No commitments are contained in this letter.

Should you have any questions concerning this letter, please contact Tom Loomis at (610) 765-5510.

Sincerely,

Pamela B. Cowan
Director – Licensing & Regulatory Affairs
Exelon Generation Company, LLC

Attachments:
1) Response to Request for Additional Information - Relief Requests Associated with the Third Ten-Year Interval for Limerick Generating Station, Units 1 and 2
2) Tables 2 and 3 - Response to Request for Additional Information I3R-02 Question 6
3) Drawings

cc: S. J. Collins, Regional Administrator, Region I, USNRC
S. Hansell, USNRC Senior Resident Inspector, LGS
P. Bamford, Project Manager [LGS] USNRC

ATTACHMENT 1

Response to Request for Additional Information
Relief Requests Associated with the Third Ten-Year Interval for Limerick Generating Station, Units 1 and 2

Relief Request I3R-02:

Background:

Relief Request I3R-02, dated March 6, 2007, states that in lieu of the evaluation and sample expansion requirements in Electric Power Research Institute (EPRI) TR-112657, Section 3.6.6.2, "RISI Selected Evaluations," LGS will utilize the requirements of Subarticle - 2430, "Additional Examinations" contained in Code Case N-578-1. The alternative criteria for additional examinations contained in Code Case N-578-1 provide a more refined methodology for implementing necessary additional examinations. Relief Request I3R-02 also states that to supplement the requirements of EPRI TR-112657, Table 4-1, "Summary of Degradation-Specific Inspection Requirements and Examination Methods," LGS will utilize the provisions listed in Table 1, Examination Category R-A, "Risk-Informed Piping Examinations" contained in Code Case N-578-1.

The NRC staff notes that Regulatory Guide (RG) 1.193 "ASME Code Cases Not Approved for Use," dated August 2005, lists the code cases that the NRC has determined not acceptable for use on a generic basis. Code Case N-578-1 is listed in Table 2, "Unacceptable Section XI Code Cases," of RG 1.193. The summary given in Table 2 of RG 1.193 states in regards to Code Case N-578-1 that:

(1) The Code Case does not address inspection strategy for existing augmented and other inspection programs such as intergranular stress corrosion cracking, flow-assisted corrosion, microbiological corrosion, and pitting.

(2) The Code Case does not provide system-level guidelines for change in risk evaluation to ensure that the risk from individual system failures will be kept small and dominant risk contributors will not be created.

Based on this background discussion the NRC staff has the following questions:

NRC Request 1:

1. It is not clear what is meant by "a more refined methodology for implementing additional examinations". How do the alternative criteria for additional examinations contained in Code Case N-578-1 provide a more refined methodology?

Response 1:

Additional examinations are discussed in Section 3.6.6.2 of Electric Power Research Institute (EPRI) TR-112657, "Revised Risk-Informed Inservice Inspection Evaluation Procedure," Revision B-A. This section discusses requirements for additional examinations at a high level, based on service conditions, degradation mechanisms, and the performance of evaluations to determine the scope of additional examinations.

A more specific discussion regarding the requirements for additional examinations is contained within paragraph -2430 of American Society of Mechanical Engineers (ASME) Code Case N-578-1, "Risk-Informed Requirements for Class 1, 2, or 3 Piping, Method B, Section XI, Division 1". The Limerick Generating Station (LGS), Units 1 and 2 statement that "the alternative criteria for additional examinations contained in Code Case N-578-1 provides a more refined methodology for implementing necessary additional examinations" refers to the additional

specificity and clarity discussed within paragraph -2430 of ASME Code Case N-578-1, when compared to the high level discussion in EPRI TR-112657.

NRC Request 2:

2. Please verify that any additional examinations required due to the identification of flaws or relevant conditions will be conducted during the current outage.

Response 2:

While not explicitly specified in paragraph –2430 of Code Case N-578-1, LGS intends to perform additional examinations required due to the identification of flaws or relevant conditions, which exceeds the acceptance standards, during the current outage in which the flaws are identified.

NRC Request 3:

3. Discuss what examination methods will be performed for each degradation mechanism. What volumes will be examined and what techniques will be used?

Response 3:

Section 4 of EPRI TR-112657 states "Application of RI-ISI uses NDE techniques that are designed to be effective for specific degradation mechanisms and examination locations". Section 4 also identifies methods of examination for each degradation mechanism with the primary method being ultrasonic testing (UT) techniques. However, EPRI TR-112657 does not identify the examination volumes for components without a degradation mechanism. In addition, EPRI TR-112657 does not specify examination volumes and methods for socket welds.

LGS has requested to use the examination methods from Code Case N-578-1 instead of the methods from EPRI TR-112657, except that the volumetric method will be used to examine intergranular stress corrosion cracking (IGSCC), as discussed in response to NRC question 5 below. In addition, the VT-2 examination method will be used to examine socket welds in accordance with the provisions of Code Case N-578-1 Table 1.

The examination figures specified in Section 4 of EPRI TR-112657 will be used to determine the examination volume based on the degradation mechanism and component configuration. Table 1 below provides a comparison of degradation mechanisms, examination volumes, and examination methods.

Table 1: Application Degradation Mechanisms, Examination Volumes, and Examination Methods						
Degradation Mechanism (Initials) N-578-1 Item Number						
Configuration	**TR-112657 Exam Figure**	**Section XI Exam Figure**	**Examination Volume Comments**	**TR-112657 Exam Method**	**N-578-1 Exam Method**	**Examination Method Comments**
Thermal Fatigue (TF) R1.11						
Butt-welds	4-1 4-2	IWB-2500-8(c) IWC-2500-7(a)	RI-ISI volume increased beyond counter bore, and is applied to smaller piping diameters and thicknesses.	Volumetric	Volumetric	No difference in method
Sweep-o-lets	4-3	IWB-2500-9	RI-ISI volume shifted to blend area of branch connection fitting.			
		IWC-2500-11	UT not required for Class 2			
Weld-o-lets	4-4	IWC-2500-10	RI-ISI volume increased for thicker material			
		IWC-2500-10	UT not required for Class 2			
Intergranular Stress Corrosion Cracking (IGSCC) R1.16						
Butt-welds	4-10 4-11	IWB-2500-8(c) IWC-2500-7(a)	RI-ISI volume increased beyond counter bore, and is applied to smaller piping diameters and thicknesses.	Volumetric	Volumetric	No difference in method
Sweep-o-lets	4-12	IWB-2500-9	RI-ISI volume shifted to blend area of branch connection fitting.			
		IWC-2500-11	UT not required for Class 2			
Weld-o-lets	4-13	IWC-2500-10	RI-ISI volume increased for thicker material			
		IWC-2500-10	UT not required for Class 2			
Flow Accelerated Corrosion (FAC) R1.18						
Piping Components	4-16 thru 4-22	N/A	Section XI does not address this examination type. Currently, all FAC susceptible components are within the station FAC Program.	Volumetric	Volumetric per FAC Program	No difference in method
No Damage Mechanism R1.20						
Butt-welds	N/A	IWB-2500-8(c) IWC-2500-7(a)	Examination requirements are not identified in TR-112657. Examination figures are taken from N-578-1 and include the expanded exam volume specified in Table 1 Note (1).	N/A	Volumetric	Examination requirements are not identified in TR-112657.
Sweep-o-lets		IWB-2500-9				
Weld-o-lets		IWB-2500-10				
All Damage Mechanisms						
Socket welds	N/A	N/A	No volumetric examination figure specified	N/A	VT-2	Examination requirements are taken from N-578-1 Table 1 Note (2).

NRC Request 4:

4. Please describe how volumetric examinations will be performed. Will volumetric examinations include the volume required for American Society of Mechanical Engineers (ASME) Section XI examinations? Will ASME Section XI, Appendix VIII qualified examiners and procedures be used for all volumetric exams? Will the examination volume be scanned for both axial and transverse indications for all exams?

Response 4:

In general, LGS plans to use UT techniques for volumetric examinations.

For the components addressed by the Risk Informed Inservice Inspection (RI-ISI) program, ASME Section XI focuses primarily on weld examinations. Risk Informed examination volumes also include portions of piping and fitting base materials that are susceptible to particular degradation mechanisms. The examination figures specified in Section 4 of EPRI TR-112657 differ from the examination figures in ASME Section XI for certain component configurations and evaluated degradations. The differences between the examination programs are summarized in Table 1 above. Table 1 is limited to the current degradation mechanisms and component configurations at LGS.

The ASME Section XI, Mandatory Appendix I, "Ultrasonic Examinations," specifies that UT examination procedures, equipment, and personnel used to detect and size flaws in piping welds shall be qualified by performance demonstration in accordance with ASME Section XI Appendix VIII, "Performance Demonstration for Ultrasonic Examination Systems." The RI-ISI program complies with Appendix VIII for weld examinations. In cases where the examination requirements cannot be met, LGS will submit a request for relief in accordance with 10CFR50.55a, "Codes and standards."

The examination methods are designed to be effective for specific degradation mechanisms and examination locations. The volumetric scanning will be in both axial and circumferential directions to detect the flaws in these orientations.

NRC Request 5:

5. How will dissimilar metal welds be addressed? Discuss in detail the technical basis for including alloy 600 pressure-retaining dissimilar metal welds in your risk-informed inservice inspection (RI-ISI), rather than a separate augmented program to the RI-ISI program.

Response 5:

All dissimilar metals (DM) welds, as characterized in ASME Section XI IWA-9000, have been evaluated for failure potential and consequence of failure along with the other non-exempt piping. The piping segments containing the DM welds were classified into the appropriate RI-ISI categories, and appropriate elements were selected per the category requirements for examination during the third inspection interval.

DM welds that are susceptible to IGSCC (i.e., IGSCC Categories B through G, as applicable) and not subject to other degradation mechanism(s) are removed from the RI-ISI program population. They are contained in the Limerick ISI Augmented Program 01, "USNRC Generic Letter 88-01, Intergranular Stress Corrosion Cracking" and are subject to the inspection

requirements of BWRVIP-75-A "BWR Vessel and Internals Project Technical Basis for Revisions to Generic Letter 88-01 Inspection Schedules". Furthermore, all DM welds classified as Category A (resistant material) per BWRVIP-75-A are included in the RI-ISI program.

NRC Request 6:

6. Is your proposed RI-ISI program the same program as the prior program authorized by the NRC via letter dated March 3, 2003 ADAMS Accession No. ML030620491, (i.e., are the number and locations of the exams the same or have they changed)? Provide information regarding: examinations, system, components, degradation mechanisms, class, etc., similar to that provided in Attachment 1 of the Callaway submittal dated March 28, 2006 (ADAMS Accession No. ML061010704). The information should show a summary of the changes in inspections from the ASME Section XI program and changes from the previous RI-ISI program to the proposed RI-ISI program.

Response 6:

The requested information regarding examinations, system, components, and degradation mechanisms for the pre-RI-ISI, the second interval RI-ISI, and the third interval RI-ISI plans is provided in Tables 2 and 3, which is contained in Attachment 2. As a "living program," the RI-ISI program methodology requires on-going revisions due to changes that occur after the original implementation. Component and configuration changes, major PRA model revisions, and weld coverage/accessibility, are maintained as part of the LGS RI-ISI program. The following tables provide a summary of the changes to the RI-ISI inspection populations for LGS, Units 1 and 2 from the initial issuance of the program up to the latest revision currently being implemented:

LIMERICK GENERATION STATION, UNIT 1			
RISK CATEGORY	**EXAMS (RISI REV. 0)**	**EXAMS (RISI REV. 3)**	**ITEMS AFFECTING CHANGES**
High	41	62	▪ Limited Exam Coverage ▪ RI-ISI Category Reclassifications due to updated PRA Model ▪ Plant/Component Modifications
Medium	55	79	▪ Limited Exam Coverage ▪ RI-ISI Category Reclassifications due to updated PRA Model ▪ Plant/Component Modifications
Total	**96**	**141**	

LIMERICK GENERATING STATION, UNIT 2			
RISK CATEGORY	**EXAMS (RISI REV. 0)**	**EXAMS (RISI REV. 3)**	**ITEMS AFFECTING CHANGES**
High	46	63	▪ Limited Exam Coverage ▪ RI-ISI Category Reclassifications due to updated PRA Model ▪ Plant/Component Modifications
Medium	51	82	▪ Limited Exam Coverage ▪ RI-ISI Category Reclassifications due to updated PRA Model ▪ Plant/Component Modifications
Total	**97**	**145**	

Limited Exam Coverage- The location of several examinations changed to increase code coverage.

Plant Modifications- Several plant modifications were installed on both Limerick Unit 1 and Unit 2. Several of these modifications increased the number of welds (valve replacements) and other modifications affected plant risk (i.e., ESW valve replacements, SRV accumulators, Digital Feedwater Control System, and APRM Modifications).

RI-ISI Category Reclassifications due to an updated PRA model- There were many changes to the PRA model that affected the number and locations of the required inspections. Some of these changes were:

- Incorporated Interfacing Systems LOCA (ISLOCA) and Break Outside Containment (BOC) initiators
- Incorporated a few new Special Initiators (i.e., Loss of Instrument Air, Loss of TECW, and Loss of an AC Bus)
- Revised LOOP analysis for initiating event frequencies and non-recovery probabilities including the 2003 Northeast Blackout.
- Incorporated loss of any of the four divisional AC and DC buses as initiating events (previously only loss of Division I was included).

NRC Request 7:

7. In section 4.0 of relief request I3R-02, you state that, "the original risk impact assessment is not a necessary element of the implementing process and is not required to be continually updated."

   The risk assessment need not be "continually updated." LGS is, however, requesting to use a risk-informed alternative in accordance with Title 10 of the *Code of Federal Regulations* 50.55a(a)(3)(i) for the third ISI interval that began on February 1, 2007, and that is based on Electric Power Research Institute (EPRI) TR-112657. A vital element of the NRC staff's conclusion that your proposed alternative satisfies the EPRI guidelines and provides an acceptable level of quality and safety is the evaluation of the change in risk between the ASME inspection program and your proposed program. The staff requests an estimate of the change in risk between the ASME ISI program in place at your facility prior to the implementation of the first RI-ISI program, and the RI-ISI program that you are proposing for the third ISI interval. Please provide this information. The estimate should include all changes to the facility and to the Probabilistic Risk Assessment models that might affect the change in risk estimate.

Response 7:

As part of updating the RI-ISI analysis for the third 10-year interval, the original risk impact assessment was also updated to confirm the change in risk was maintained within the acceptance guidelines. The original methodology of the calculation was not changed, and the change in risk was simply re-assessed using the initial 1989 Section XI program prior to RI-ISI and the new element selection for the third 10-year interval RI-ISI program. This same process has been maintained in each revision to the Limerick RI-ISI report that has been performed to date.

Using this process, the change in risk for Unit 1 was 2.21E-08 for delta-core damage frequency (delta-CDF) and –1.25E-09 for delta-large early release frequency (delta-LERF). For Unit 2, the values were 2.68E-08 for delta-CDF and 1.02E-09 for delta-LERF. These values are all within the 1.00E-06 and 1.00E-07 acceptance criteria for delta-CDF and delta-LERF, respectively. The change in risk analysis was likewise down at a system level, and no system acceptance criteria are exceeded in the current program using the latest RI-ISI element elections.

Relief Request I3R-05:

NRC Request 1:

1. Page two of RR I3R-05, second paragraph, sixth line states that "The Technical Specifications functional testing program is based on the ASME/ANSI OMc-1990 Addenda to the ASME/ANSI OM-1987 Edition Part 4." The Relief Request states that LGS is using ASME Section XI, 2001 edition through the 2003 addenda. ASME Section XI, requires the use of ASME/ANSI OM-1987 edition Part 4 with OMa 1988 Addenda (Ref. Table IWA-1600-1). Also, the NRC never endorsed OMc-1990 addenda to OM-4 for use. Therefore, please provide the basis for using the OMc-1990 addenda as the basis for the LGS Technical Specification (TS) Testing Program.

Response 1:

As discussed in the U. S. Nuclear Regulatory Commission letter to Philadelphia Electric Company, dated May 11, 1992, the Staff issued Amendment No. 54 to the Limerick Unit 1 Facility Operating License and Amendment No. 19 to the Limerick Unit 2 Facility Operating License. These amendments incorporated the use of the ASME/ANSI OM-1990 Addenda to ASME/ANSI OM-1987 Part 4 into the Limerick Technical Specifications as discussed in the amendments.

NRC Request 2:

2. Page two of RR I3R-05, fifth paragraph, states that "The examinations are performed by qualified personnel and meet the intent of the inspections and tests of ASME Section XI." Please provide justification for this statement and explain how the TS 3/4.7.4 visual examination method is equivalent to the VT-3 visual examination method described in IWA-2213.

Response 2:

The Limerick Technical Specifications do not describe the personnel qualification for performing the inspections. The Limerick Technical Specifications describe the acceptance criteria for the visual inspections. The personnel that perform the examinations are qualified to a limited VT-3 certification (IWA-2350). This limited certification meets the requirements of an ASME Section XI VT-3 certification (IWA-2213) for snubber examinations only. Exelon Procedure TQ-AA-122, "Qualification and Certification of Nondestructive (NDE) Personnel", controls this certification.

NRC Request 3:

3. OM-4, Paragraph 3.2.1.1, Operability Test, states that snubber operational readiness shall be tested by either an in-place or bench test. Please verify that at LGS, snubbers are tested by an in-place or bench test, because TS 3/4.7.4 does not specify this.

Response 3:

The testing of LGS snubbers is controlled by procedure ST-4-103-301-1, "Snubber Functional Test", for Unit 1, and ST-4-103-301-2, "Snubber Functional Test", for Unit 2. These procedures control the testing of snubbers. General practice is to bench test snubbers for functionality.

NRC Request 4:

4. Snubbers are tested in defined test groups using either a 10 percent testing plan or the 37 Testing Sample Plan. The 37 Testing Sample Plan: OM-4, Paragraph 3.2.3.2(b) states that for any snubber(s) determined to be unacceptable as a result of testing, an additional random sample of at least one-half the size of the initial sample lot shall be tested. Explain how the requirements of Section 3.2.3.2(b) will be met, if the 37 testing sample plan is used.

Response 4:

Limerick Technical Specification 4.7.4.e.2 describes the 37 testing sample plan. The testing plan for a snubber failure is based on Technical Specification Figure 4.7.4-1 "Sample Plan 2) For Snubber Functional Test". This figure uses the equation C=0.055n-2.007 where C is the total number of snubbers of that type not meeting the acceptance requirements and N is the cumulative number of snubbers of the type tested. If the point falls above the line then additional testing is required. Snubber testing is completed when the point falls in the "Accept" region or all the snubbers of that type have been tested.

If one (1) snubber fails to meet the acceptance criteria then an additional random sample of 19 snubbers of the failed type will be tested. If a second snubber fails to meet the acceptance criteria then an additional random sample of 18 snubbers of the failed type will be tested. This testing continues until the number of failed snubbers falls below the equation contained in Technical Specification Figure 4.7.4-1 or all the snubbers of that type have been tested.

Relief Request I3R-06:

1. For Relief Request I3R-06, Revision 0, relief is requested pursuant to 10 CFR 50.55a(g)(5)(iii), from the ASME Code required volumetric examination of essentially 100 percent of the weld length on the basis that conformance to the ASME Code is impractical.

NRC Request 1a:

a. Provide the following residual heat removal (RHR) heat exchanger drawings as referenced in Relief Request I3R-06: XI-1E-205 (LGS, Unit 1) and XI-2E-205 (LGS, Unit 2);

Response 1a:

The requested drawings are included in Attachment 3.

NRC Request 1b:

b. In the Applicable Code Requirement section of RR I3R-06, ASME Code Figure IWC-2500-1 for circumferential welds is referenced. Identify whether the applicable weld configuration is Figure IWC-2500-1(a) or (b) or (c);

Response 1b:

Weld	Name	Figure IWC-2500-1
RHR-HXAR-4	Shell Ring 1 to Flange Weld	(a)
RHR-HXBR-4	Shell Ring 1 to Flange Weld	(a)
2AE-205 SG-1	Shell (Ring #1) to Flange Weld	(a)
2BE-205 SG-1	Shell (Ring #1) to Flange Weld	(a)

NRC Request 1c:

c. ASME Code, Section XI, Table IWC-2500-1, Examination Category C-A, Item C1.10, Note 3 states that in the case of multiple vessels of similar design, size, and service (such as steam generators, heat exchangers), the required examinations may be limited to one vessel or distributed among the vessels. LGS, Units 1 and 2 each have two RHR heat exchangers. Are exams of all four heat exchangers planned to distribute the examinations in order to meet the ASME Code required volumetric examination of essentially 100% of the weld length?

Response 1c:

Each RHR heat exchanger contains four (4) welds that require examination. Since the RHR heat exchangers are the same design for each Unit, only one heat exchanger is examined. The UT examinations on three (3) of the welds obtain the required coverage. Only one (1) weld (shell to flange) has limited coverage, and this limitation is due to the bolting of the heat exchanger's bottom head to the heat exchanger. Since both heat exchangers are the same design, performing an examination of the shell to flange weld on both RHR heat exchangers will not increase the examination coverage.

Relief Request I3R-07:

NRC Request 1a:

a. Provide the following pump drawings as referenced in Relief Request I3R-07: XI-1P-202 and XI-1P-206 (LGS, Unit 1), XI-2P-202 and XI-2P-206 (LGS, Unit 2)

Response 1a:

The requested drawings are included in Attachment 3.

NRC Request 1b:

b. Clarify the pump designations regarding "1(2)" and what pumps are assigned to LGS, Units 1 and 2 and to what systems.

Response 1b:

Limerick uses the following designation for pumps:

- First number is the unit (example: 1(2) – This number refers to Unit 1(Unit 2))
- First letter is the loop that contains the pump (example: 1(2)**A**-P202)
- Second letter is P for pumps (example: 1(2)A-**P**202)

- The last three numbers are the pump designation (example: 1(2)A-P**202**).

The designation "1(2)" is used when a pump is on both units. This methodology is used so both pump component numbers need not be written. The following is a listing of the Limerick pumps affected by this relief request:

1(2)A-P202 is the Unit 1 and Unit 2 "A" Residual Heat Removal Pumps
1(2)B-P202 is the Unit 1 and Unit 2 "B" Residual Heat Removal Pumps
1(2)C-P202 is the Unit 1 and Unit 2 "C" Residual Heat Removal Pumps
1(2)D-P202 is the Unit 1 and Unit 2 "D" Residual Heat Removal Pumps
1(2)A-P206 is the Unit 1 and Unit 2 "A" Core Spray Pumps
1(2)B-P206 is the Unit 1 and Unit 2 "B" Core Spray Pumps
1(2)C-P206 is the Unit 1 and Unit 2 "C" Core Spray Pumps
1(2)D-P206 is the Unit 1 and Unit 2 "D" Core Spray Pumps

Relief Request I3R-09, I3R-10, I3R-11, and I3R-12:

NRC Request 1:

1. The NRC staff understands that LGS, Units 1 and 2 is proposing to extend its Integrated Leak Rate Test (ILRT) interval from 10 to 15 years in accordance with the submittal dated February 20, 2007 (ADAMS Accession No. ML070530296). Based on the proposed new ILRT frequency, provide a detailed evaluation and justification of the effect of the proposed ILRT extension on the level of qualify and safety for relief requests I3R-09 and I3R-10.

Response 1:

As noted in I3R-09 and I3R-10, a VT-2 examination looking for a nitrogen gas leak with less than 1 psig driving pressure for the drywell pressure instrumentation (I3R-09) and the suppression pool pressure and level instrumentation (I3R-10) would be inconclusive. Additionally, significant tubing leaks would be identified in the control room as part of the Technical Specification required monitoring. As also discussed in our response to Question No. 4 concerning your request for additional information for the ILRT extension (P. B. Cowan (Exelon Generation Company, LLC) to U. S. Nuclear Regulatory Commission, "Response to Request for Additional Information Technical Specifications Change Request – Type A Test Extension", dated September 14, 2007), a history of combined Type B and Type C test leakage rate totals were provided to justify the ILRT extension. These totals do not identify adverse trends in overall leak tightness through measurement of the Type B and C leakages, which would include the drywell pressure instrumentation (I3R-09) and the suppression pool pressure and level instrumentation (I3R-10). Therefore, there is no issue / impact on the level of quality and safety with regards to these two relief requests. If the ILRT extension request is approved the current schedule for performing the ILRTs is 2012 (1R14) for Unit 1 and 2011 (2R11) for Unit 2. The dates for the ILRTs are subject to change, but will be completed in the interval.

NRC Request 2:

2. For the components of relief requests I3R-09, I3R-10, I3R-11, and I3R-12, please identify any tests conducted, e.g. TS surveillance tests, which affect internal pressure other than the ILRT and local leak rate tests, the frequency conducted, the internal pressure achieved, and the feasibility of conducting a system leak test concurrent with the test.

Response 2:

A review of LGS test procedures was performed, which did not identify any tests other than the ILRT and local leak rate tests that affect the internal pressure of the piping identified in the relief requests.

NRC Request 3:

3. Please provide drawings referenced in relief requests I3R-09, I3R-10, I3R-11, and I3R-12.

Response 3:

The requested drawings are included in Attachment 3.

ATTACHMENT 2

Table 2 - Response to Request for Additional Information I3R-02 Question 6 Unit 1

Table 3 - Response to Request for Additional Information I3R-02 Question 6 Unit 2

Table 2
Response to Request for Additional Information I3R-02 Question 6 Unit 1

Table 2: System/Selection Comparisons Between ASME Section XI and Risk Informed Programs for Unit 1

System	Unit 1 2nd Interval ASME XI (1989 Edition)			Unit 1: 2nd Interval RI-ISI (1989 Edition)							Unit 1: 3rd Interval RI-ISI (2001Edition/ 2003 Addenda)						
	Cat.	Weld Count	Weld Sel.	Risk		Conseq Rank	Failure Potential		Weld Count	RI-ISI Sel.	Risk		Conseq Rank	Failure Potential		Weld Count	RI-ISI Sel.
				Cat.	Rank		DM(s)	Rank			Cat.	Rank		DM(s)	Rank		
CRD	C-F-2	53	4	6/7	L	-	-	-	53	0	6/7	L	-	-	-	53	0
CS Note 1	B-F	9	9	4	M	H	None	L	3	1	2	H	H	TASCS IGSCC	M	14	4
	B-J	31	8	5	M	L/M	FAC TASCS IGSCC	H/M	14	9	4	M	H	None	L	20	2
	C-F-1	1	1	6/7	L	-	-	-	241	0	6/7	L	-	-	-	224	0
	C-F-2	243	19														
FW Note 1 & 2	B-J	90	23	1	H	H	TASCS FAC	H	2	2	1	H	H	TASCS TT FAC	H	72	18
				3	H	M	TASCS FAC TT	H	72	24	3	H	H	TASCS FAC	M	17	5
	C-F-2	28	3	5	L	L	TASCS FAC	H	13	2	5	M	M	TASCS	M	7	1
				6/7	L	-	-	-	12	0	6/7	L	-	-	-	5	0
HPCI Note 1 & 2	B-J	23	6	3	H	M	FAC TT	H	27	7	3	H	M	TT FAC	H	27	7
				4	M	H	None	L	30	7	4	M	H	None	L	40	4
	C-F-2	204	16	5	M	M	TT	M	4	1	5	M	M	TT	M	4	1
				6/7	L	-	-	-	155	0	6/7	L	-	-	-	146	0
MS Note 1 & 2	B-J	107	27	4	M	H	None	L	138	16	4	M	H	None	L	237	24
	C-F-2	142	11	6/7	L	-	-	-	103	0	6/7	L	-	-	-	4	0
RCIC Note 1 & 2	B-F	2	2	3	H	M	TT FAC	H	28	7	3	H	M	TT FAC	H	28	7
	B-J	26	7	5	M	M	TASCS IGSCC TT	M	7	1	4	M	H	None	L	25	3
	C-F-2	129	10	6/7	L	-	-	-	120	0	5	M	M	TASCS TT	M	9	1
											6/7	L	-	-	-	94	0
RHR Note 1	B-F	20	20	2	H	H	E-C	M	2	1	2	H	H	TASCS IGSCC E-C	M	63	16
	B-J	104	26	4	M	H	None	L	5	1	4	M	H	None	L	126	13
	C-F-1	13	13	5	M	M	TASCS IGSCC E-C	M	73	12	5	M	M	TASCS E-C	M	44	5
	C-F-2	659	50	6/7	L	-	-	-	517	0	6/7	L	-	-	-	364	0
RPV-APP Note 1	B-F	14	14	6/7	L	-	-	-	38	0	4	M	H	None	L	38	4
	B-J	27	7														
RR Note 1	B-F	12	12	5	M	M	TASCS	M	12	2	2	H	H	TASCS	M	12	3
	B-J	111	28	6/7	L				99	0	4	M	H	None	L	95	10
											6/7	L	-	-	-	4	0

Table 2: System/Selection Comparisons Between ASME Section XI and Risk Informed Programs for Unit 1

System	Unit 1 2nd Interval ASME XI (1989 Edition)			Unit 1: 2nd Interval RI-ISI (1989 Edition)							Unit 1: 3rd Interval RI-ISI (2001Edition/ 2003 Addenda)						
	Cat.	Weld Count	Weld Sel.	Risk		Conseq Rank	Failure Potential		Weld Count	RI-ISI Sel.	Risk		Conseq Rank	Failure Potential		Weld Count	RI-ISI Sel.
				Cat.	Rank		DM(s)	Rank			Cat.	Rank		DM(s)	Rank		
RWCU Note 1 & 2	BJ	121	31	4	M	H	None	L	3	1	2	H	H	TASCS	M	2	1
	C-F--1	3	3	5	M	M	TASCS	M	2	1	4	M	H	None	L	96	10
				6/7	L	-	-	-	113	0	6/7	L	-	-	-	23	0
SLC	B-J	64	16	5	M	M	TASCS	M	4	1	2	H	H	TASCS	M	4	1
				6/7	L	-	-	-	60	0	4	M	H	None	L	6	1
											6/7	L	-	-	-	54	0

Systems:

CRD - Control Rod Drive
CS - Core Spray
FW – Feedwater
HPCI – High Pressure Coolant Injection
MS – Main Steam
RCIC – Reactor Core Isolation Cooling
RPV-APP – Reactor Pressure Vessel
RR – Reactor Recirculation
RWCU –Reactor Water Cleanup System
SLC – Standby Liquid Control

Abbreviations:

Cat. - Category
Sel. – Selection
Conseq. – Consequence
DM – Degradation Mechanism

Ranking:

L – Low
M – Medium
H – High

Note: Low Risk Categories 6 and 7 do not require examinations. The tables do not show the six possible combinations of Failure Potential and Consequence rankings that result in a Low Risk ranking.

Degradation Mechanisms (Initials) (RI-ISI Item Number) (Name)

TASCS – R1.11 -Thermal Stratification, Cycling and Stripping
TT – R1.11 - Thermal Transient
IGSCC – R1.16 - Intergranular Stress Corrosion Cracking
E-C – R1.18 - Erosion-Cavitations
FAC – R1.18 - Flow Accelerated Corrosion

Note 1: Systems or portion of system that have a degradation mechanism addressed by a separate augmented program are examined under the augmented program for that particular degradation mechanism. If no other degradation mechanism is identified, the element is removed from the RI-ISI element selection population and retained in the appropriate augmented inspection program. The augmented programs are the Flow Accelerated Corrosion for FAC and Intergaranular Stress Corrosion for IGSCC. If another degradation mechanism is present, which is not addressed by the augmented program, the remaining degradation mechanism is examined as part of the RI-ISI program.

Note 2: To assist in the comparison between programs, the inclusion of the High Energy Line Break (HELB) Augmented program is not shown. The tables are limited to the non-exempt Class 1 and 2 elements subject to examination under the ASME Section XI program and subsequently incorporated into the RI-ISI program. The merger of the RI-ISI and HELB programs occurred in the third inspection interval using the methods specified in EPRI TR-1006937. This merger involved the addition of the welds beyond the Class 2 boundary within the break exclusion area.

Table 3
Response to Request for Additional Information I3R-02 Question 6 Unit 2

Table 3: System/Selection Comparisons Between ASME Section XI and Risk Informed Programs for Unit 2

System	Unit 2 2nd Interval ASME XI (1989 Edition)			Unit 2: 2nd Interval RI-ISI (1989 Edition)							Unit 2: 3rd Interval RI-ISI (2001Edition/ 2003 Addenda)						
	Cat.	Weld Count	Weld Sel.	Risk		Conseq Rank	Failure Potential		Weld Count	RI-ISI Sel.	Risk		Conseq Rank	Failure Potential		Weld Count	RI-ISI Sel.
				Cat.	Rank		DM(s)	Rank			Cat.	Rank		DM(s)	Rank		
CRD	C-F-2	57	5	6/7	L	-	-	-	57	0	6/7	L	-	-	-	57	0
CS Note 1	B-F	9	9	4	M	H	None	L	3	1	2	H	H	TASCS IGSCC	M	17	6
	B-J	35	9	5	M	M	TASCS IGSCC	M	17	6	4	M	H	None	L	19	2
	C-F-1	2	2	6/7	L	-	-	-	263	0	6/7	L	-	-	-	247	0
	C-F-2	265	20														
FW Note 1 &2	B-J	92	23	1	H	H	TASCS FAC	H	3	1	1	H	H	TASCS TT FAC	H	67	18
				3	H	M	TASCS TT FAC	H	65	30	3	H	H	TASCS FAC	M	19	5
	C-F-2	25	2	5	M	L	TASCS FAC	H	16	3	5	M	M	TASCS	M	5	1
				6/7	L	-	-	-	9	0	6/7	L	-	-	-	4	0
HPCI Note 1 & 2	B-J	24	6	3	H	M	TT FAC	H	28	7	3	H	M	TT FAC	H	28	7
				4	M	H	None	L	30	7	4	M	H	None	L	40	4
	C-F-2	202	16	5	M	M	TT	M	5	1	5	M	M	TT	M	5	1
				6/7	L	-	-	-	153	0	6/7	L	-	-	-	143	0
MS Note 1 & 2	B-J	107	27	4	M	H	None	L	136	14	4	M	H	None	L	235	24
	C-F-2	140	11	6/7	L	-	-	L	103	0	6/7	L	-	-	-	4	0
RCIC Note 1 & 2	B-F	2	2	3	H	M	TT FAC	H	26	7	3	H	M	TT FAC	H	26	7
	B-J	31	8								4	M	H	None	L	30	3
	C-F-2	140	11	6/7	L	-	-	-	114	0	5	M	M	TASCS TT	M	9	1
											6/7	L	-	-	-	77	0
RHR Note 1	B-F	20	20	2	H	M	E-C	H	2	1	2	H	H	TASCS IGSCC E-C	M	59	15
	B-J	92	23	4	M	H	None	L	5	1	4	M	H	None	L	123	13
	C-F-1	10	10	5	M	M	E-C TASCS IGSCC	M	72	12	5	M	M	TASCS E-C	M	49	5
	C-F-2	664	50	6/7	L	-	-	-	508	0	6/7	L	-	-	-	356	0
RPV-APP Note 1	B-F	14	14	6/7	L	-	-	-	63	0	4	M	H	None	L	41	5
	B-J	27	7														
RR Note 1	B-F	12	12	5	M	M	TASCS	M	9	1	2	H	H	TASCS	M	9	3
	B-J	108	27	6/7	L	M	None	L	101	0	4	M	H	None	L	97	10
											6/7	L	-	-	-	4	0

Table 3: System/Selection Comparisons Between ASME Section XI and Risk Informed Programs for Unit 2

System	Unit 2 2nd Interval ASME XI (1989 Edition)			Unit 2: 2nd Interval RI-ISI (1989 Edition)							Unit 2: 3rd Interval RI-ISI (2001Edition/ 2003 Addenda)						
	Cat.	Weld Count	Weld Sel.	Risk Cat.	Risk Rank	Conseq Rank	Failure Potential DM(s)	Failure Potential Rank	Weld Count	RI-ISI Sel.	Risk Cat.	Risk Rank	Conseq Rank	Failure Potential DM(s)	Failure Potential Rank	Weld Count	RI-ISI Sel.
RWCU Note 1 & 2	B-F	2	2	4	M	H	None	L	4	3	2	H	H	TASCS	M	2	1
	B-J	133	34	5	M	M	TASCS	M	2	1	4	M	H	None	L	119	12
	C-F-1	1	1	6/7	L	-	-	-	111	0	6/7	L	-	-	-	22	0
	C-F-2	3	1														
SLC Note 1	B-J	68	17	5	M	M	None	M	4	1	2	H	H	TASCS	M	4	1
				6/7	L	M	None	L	64	0	4	M	H	None	L	5	1
											6/7	L	M	None	L	59	0

Systems:

CRD - Control Rod Drive
CS - Core Spray
FW – Feedwater
HPCI – High Pressure Coolant Injection
MS – Main Steam
RCIC – Reactor Core Isolation Cooling
RPV-APP – Reactor Pressure Vessel
RR – Reactor Recirculation
RWCU –Reactor Water Cleanup System
SLC – Standby Liquid Control

Abbreviations:

Cat. - Category
Sel. – Selection
Conseq. – Consequence
DM – Degradation Mechanism

Ranking:

L – Low
M – Medium
H – High

Note: Low Risk Categories 6 and 7 do not require examinations. The tables do not show the six possible combinations of Failure Potential and Consequence rankings that result in a Low Risk ranking.

Degradation Mechanisms (Initials) (RI-ISI Item Number) (Name)

TASCS – R1.11 -Thermal Stratification, Cycling and Stripping
TT – R1.11 - Thermal Transient
IGSCC – R1.16 - Intergranular Stress Corrosion Cracking
E-C – R1.18 - Erosion-Cavitations
FAC – R1.18 - Flow Accelerated Corrosion

Note 1: Systems or portion of system that have a degradation mechanism addressed by a separate augmented program are examined under the augmented program for that particular degradation mechanism. If no other degradation mechanism is identified, the element is removed from the RI-ISI element selection population and retained in the appropriate augmented inspection program. The augmented programs are the Flow Accelerated Corrosion for FAC and Intergaranular Stress Corrosion for IGSCC. If another degradation mechanism is present, which is not addressed by the augmented program, the remaining degradation mechanism is examined as part of the RI-ISI program.

Note 2: To assist in the comparison between programs, the inclusion of the High Energy Line Break (HELB) Augmented program is not shown. The tables are limited to the non-exempt Class 1 and 2 elements subject to examination under the ASME Section XI program and subsequently incorporated into the RI-ISI program. The merger of the RI-ISI and HELB programs occurred in the third inspection interval using the methods specified in EPRI TR-1006937. This merger involved the addition of the welds beyond the Class 2 boundary within the break exclusion area.

ATTACHMENT 3

Drawings

Relief Request I3R-06
XI-1E-205 (Unit 1)
XI-2E-205 (Unit 2)

Relief Request I3R-07
XI-1P-202 (Unit 1)
XI-1P-206 (Unit 1)
XI-2P-202 (Unit 2)
XI-2P-206 (Unit 2)

Relief Request I3R-09
ISI-M-42, Sht. 1 (Unit 1)
ISI-M-42, Sht. 3 (Unit 2)
ISI-M-57, Sht. 1 (Unit 1)
ISI-M-57, Sht. 4 (Unit 2)
ISI-M-59, Sht. 1 (Unit 1)
ISI-M-59, Sht. 3 (Unit 2)

Relief Request I3R-10
ISI-M-52, Sht. 1 (Unit 1)
ISI-M-52, Sht. 3 (Unit 2)

Relief Request I3R-11
ISI-M-57, Sht. 2 (Unit 1)
ISI-M-57, Sht. 3 (Unit 1)
ISI-M-57, Sht. 5 (Unit 2)
ISI-M-57, Sht. 6 (Unit 2)
ISI-M-58, Sht. 1 (Unit 1)
ISI-M-58, Sht. 2 (Unit 1)
ISI-M-58, Sht. 3 (Unit 2)
ISI-M-58, Sht. 4 (Unit 2)

Relief Request I3R-12
ISI-M-55, Sht. 1 (Unit 1)

S/U 49A

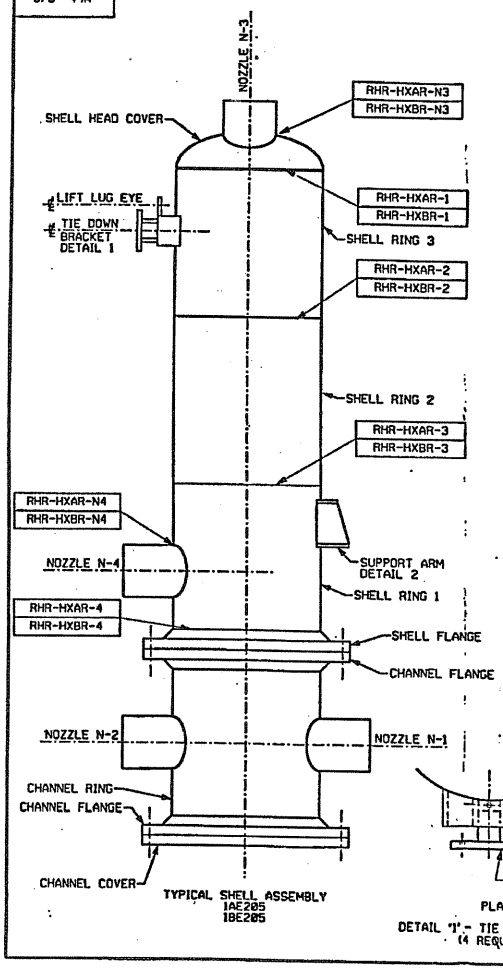

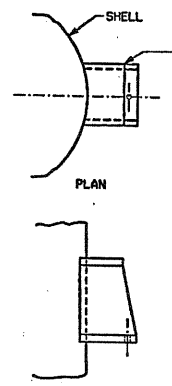

DETAIL '2' - SUPPORT ARM
(4 REQUIRED)

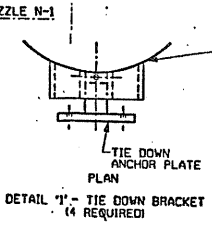

DETAIL '1' - TIE DOWN BRACKET
(4 REQUIRED)

INTEGRAL ATTACHMENT/ SUPPORT NO. NOTE 3	HT. EXCH. No.	LOCATION
RHR-HXAR-2-A RHR-HXBR-2-A	1AE205 1BE205	NORTH - 0°
RHR-HXAR-2-B RHR-HXBR-2-B	1AE205 1BE205	EAST - 90°
RHR-HXAR-2-C RHR-HXBR-2-C	1AE205 1BE205	SOUTH - 180°
RHR-HXAR-2-D RHR-HXBR-2-D	1AE205 1BE205	WEST - 270°

INTEGRAL ATTACHMENT/ SUPPORT NO. NOTE 3	HT. EXCH. No.	LOCATION
RHR-HXAR-1-A RHR-HXBR-1-A	1AE205 1BE205	NORTH - 0°
RHR-HXAR-1-B RHR-HXBR-1-B	1AE205 1BE205	EAST - 90°
RHR-HXAR-1-C RHR-HXBR-1-C	1AE205 1BE205	SOUTH - 180°
RHR-HXAR-1-D RHR-HXBR-1-D	1AE205 1BE205	WEST - 270°

SHEET 1 NOTES:

1) LINE CONTINUATIONS:
   1AE205: N3 - FIGURE 01-03
   N4 - FIGURE 01-03
   1BE205: N3 - FIGURE 01-06
   N4 - FIGURE 01-06
2) HEAT EXCHANGERS ARE SEISMIC CLASS I.
3) INTEGRAL ATTACHMENTS ARE EXAMINED IAW TABLE IWC-2500-1, EXAMINATION CAT. C-C, ITEM NO. C3.10. SUPPORT COMPONENTS ARE SUBJECT TO VT-3 EXAMINATION PER SUBSECTION IWF.

REFERENCE DRAWINGS:

ISI-M-51	ASME SECTION XI BOUNDARY P&ID
SPEC. 8031-P502	FIGURE 01-24, 01-25
N-00E-189-00003	DETAIL SHELL ASSEMBLY
N-00E-189-00004	SUPPORT DETAILS

NO.	DATE	DESCRIPTION	REV'D	CHK'D	APPV'D
1	12/11/98	INCORP. ECR 98-01578 REV. 0. CHANGED SHELL ASSEMBLY FROM 4 RINGS TO 3 RINGS. REVISED ATTACHMENT/SUPPORT NO.S. REVISED REFERENCE DRAWINGS.	DJD	EJW DLS	SJB
0	01/31/98	ISSUED FOR 1ST INSP. INTERVAL.		BECHTEL	

SCALE NONE . DRAWN CADD/MDC

BECHTEL
SAN FRANCISCO

LIMERICK GENERATING STATION
UNITS 1 & 2
PHILADELPHIA ELECTRIC COMPANY

ISI EQUIP. DWG. - REACTOR BUILDING
RHR HEAT EXCHANGERS 1AE205, 1BE205
BODY AND NOZZLE WELDS - UNIT 1

JOB No.	DRAWING No.	REV.
8031	XI-1E-205	1

NOT FOR CONSTRUCTION | PAGE 1 OF 2

S/U 2-49A

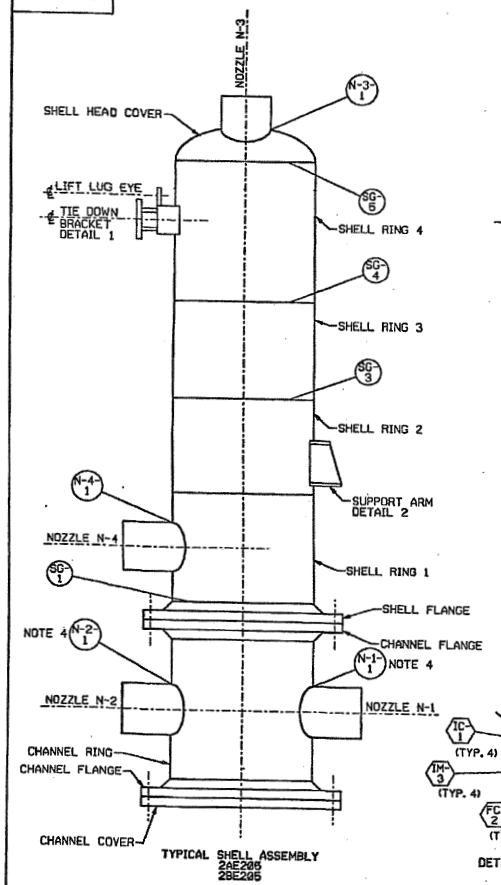

TYPICAL SHELL ASSEMBLY
2AE205
2BE205

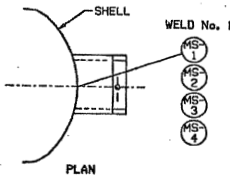

PLAN

WELD No.	HT. EXCH. No.	LOCATION
MS-1	2AE205 2BE205	SOUTH - 0°
MS-2	2AE205 2BE205	WEST - 90°
MS-3	2AE205 2BE205	NORTH - 180°
MS-4	2AE205 2BE205	EAST - 270°

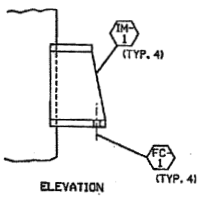

ELEVATION

DETAIL '2' - SUPPORT ARM
(4 REQUIRED)

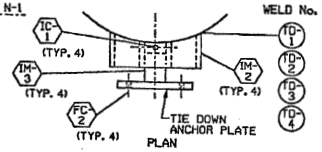

PLAN

DETAIL '1' - TIE DOWN BRACKET
(4 REQUIRED)

WELD No.	HT. EXCH. No.	LOCATION
TD-1	2AE205 2BE205	SOUTH - 0°
TD-2	2AE205 2BE205	WEST - 90°
TD-3	2AE205 2BE205	NORTH - 180°
TD-4	2AE205 2BE205	EAST - 270°

SHEET 1 NOTES:
1) LINE CONTINUATIONS:
2AE205: N3 - XI-GBB-202-1
N4 - XI-GBB-217-1
2BE205: N3 - XI-GBB-202-2
N4 - XI-GBB-217-2
2) HEAT EXCHANGERS ARE SEISMIC CLASS I.
3) HEX DENOTES COMPONENTS SUBJECT TO VT-3 EXAMINATION PER SUBSECTION IWF. REFER TO EXAM PLAN TABLE.
4) WELD Nos. N-1-1 AND N-2-1 ARE ADDED FOR TRACKING AND ARE NOT PSI/ISI RELATED.

REFERENCE DRAWINGS:

ISI-M-51	ASME SECTION XI BOUNDARY P&ID
MI-E11-B001-C-27.6	SHELL ASSEMBLY DETAILS
MI-E11-B001-C-28.3	SUPPORT DETAILS
C-196	SUPPORT PLANS & SECTIONS
ISI-2E-205	PRESERVICE INSPECTION DRAWING

NO.	DATE	REVISIONS	BY	CHKD	IE CHKR	GROUP ENGR	CHIEF ENGR	PROJ ENGR
1	10-18-78	ISSUED FOR 1ST INSP. INTERVAL.	TP	RC	RC	RCG	[illegible]	[illegible]

SCALE NONE | DRAWN CADD/TP

BECHTEL
SAN FRANCISCO

LIMERICK GENERATING STATION
UNITS 1 & 2
PHILADELPHIA ELECTRIC COMPANY

ISI EQUIP. DWG. - REACTOR BUILDING
RHR HEAT EXCHANGERS 2AE205, 2BE205
BODY AND NOZZLE WELDS - UNIT 2

JOB No.	DRAWING No.	REV.
8031	XI-2E-205	0

NOT FOR CONSTRUCTION | PAGE 1 OF 2

16 X
Certified that the microfilming image of this document is a correct and complete reproduction and representation of the original documents generated by the [illegible] group of companies.
Camera Operator Date Microfilm Supervisor

S/U 19A

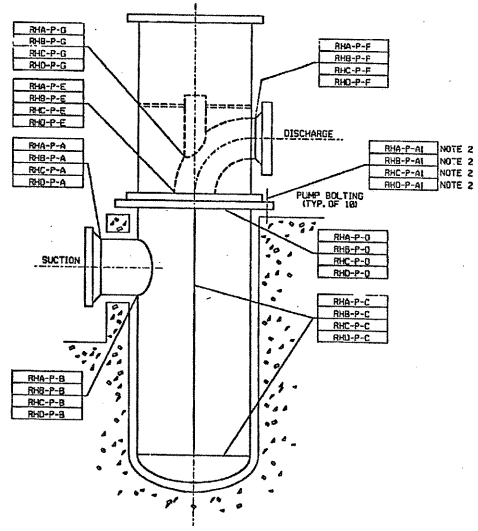

TYPICAL INSTALLATION
RHR PUMPS
1AP202
1BP202
1CP202
1DP202

NOTE:
1) LINE CONTINUATIONS:
a) 1AP202: SUCTION - FIGURE 01-03
DISCHARGE- FIGURE 01-03
b) 1BP202: SUCTION - FIGURE 01-06
DISCHARGE- FIGURE 01-06
c) 1CP202: SUCTION - FIGURE 01-08
DISCHARGE- FIGURE 01-08
d) 1DP202: SUCTION - FIGURE 01-10
DISCHARGE- FIGURE 01-10
2) COMPONENTS ARE SUBJECT TO VT-3 EXAMINATION PER SUBSECTION IWF.
3) PUMPS ARE SEISMIC CLASS I.

REFERENCE DRAWINGS:

ISI-M-51	ASME SECTION XI BOUNDARY P&ID
M1-E11-C602	INGERSOLL RAND F-34APKD 361EX3-C
SPEC. 8031-P-502	FIGURE 01-27

NO.	DATE	REVISIONS	BY	CHKD	DR. CHKD	GROUP CHIEF	PROJ. ENGR.	DISC. ENGR.
A	6/4/79	ISSUED FOR 1ST INSP. INTERVAL	MDC					

MAT. NONE — SYSTEM CADD/MDC

BECHTEL
SAN FRANCISCO

LIMERICK GENERATING STATION
UNITS 1 & 2
PHILADELPHIA ELECTRIC COMPANY

ISI EQUIP. DWG. - REACTOR BUILDING
RHR PUMPS 1AP, 1BP, 1CP & 1DP202
SUPPORTS AND BODY WELDS - UNIT 1

JOB NO.	DRAWING NO.	REV.
8031	XI-1P-202	0

NOT FOR CONSTRUCTION | PAGE 1 OF 1

I certify that the microfilmed image contained on this microfilm was made in the normal and regular course of business. This is a true, full, correct and complete microreproduction and replacement for and/or in lieu of original documents generated by the Bechtel group of companies.
Signed R. P. [illegible] Date 7-17-79 Camera Type [illegible]
Camera Operator

16 x 004

S/U 51A

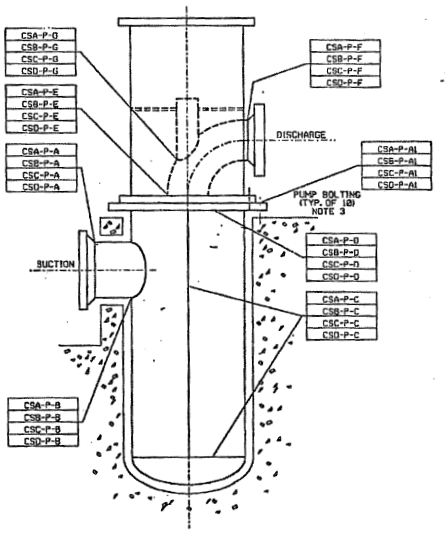

TYPICAL INSTALLATION
CORE SPRAY PUMPS
1AP206
1BP206
1CP206
1DP206

NOTE:
1) LINE CONTINUATIONS:
a) 1AP206: SUCTION - FIGURE 04-03
DISCHARGE- FIGURE 04-03
b) 1BP206: SUCTION - FIGURE 04-05
DISCHARGE- FIGURE 04-05
c) 1CP206: SUCTION - FIGURE 04-03
DISCHARGE- FIGURE 04-03
d) 1DP206: SUCTION - FIGURE 04-05
DISCHARGE- FIGURE 04-05
2) C.S. PUMPS ARE SEISMIC CLASS I.
3) COMPONENTS SUBJECT TO VT-3 EXAMINATION PER SUBSECTION IWF. REFER TO EXAM PLAN TABLE.

REFERENCE DRAWINGS:

ISI-M-52	ASME SECTION XI BOUNDARY P&ID
M1-E21-C001	INGERSOLL RAND F-25APKD 38UXXI-K
SPEC. 8031-P-582 FIGURE 04-09	

No.	DATE	REVISIONS	BY	CHKD	DESIGN	DRAWN	DATE
0	7/1/86	ISSUED FOR 1ST INSP. INTERVAL	MDC	RR	RC	RC	7/1/86

SCALE NONE DRAWN CADD/MDC

BECHTEL
SAN FRANCISCO

LIMERICK GENERATING STATION
UNITS 1 & 2
PHILADELPHIA ELECTRIC COMPANY

ISI EQUIP. DWG. - REACTOR BUILDING
CORE SPRAY PUMPS 1AP THRU 1DP206
SUPPORTS AND BODY WELDS - UNIT 1

JOB No.	DRAWING No.	REV.
8031	XI-1P-206	0

NOT FOR CONSTRUCTION | PAGE 1 OF 1

I certify that the microfilmed image contained on this microform was made in the normal and regular course of business. This is a true, full, correct and complete reproduction and replacement for and/or in lieu of original documents [illegible] group of companies.
Signed [illegible] Date 7/17/86 Camera Type [illegible]
Camera Operator

16 x 005

S/U 2-49A

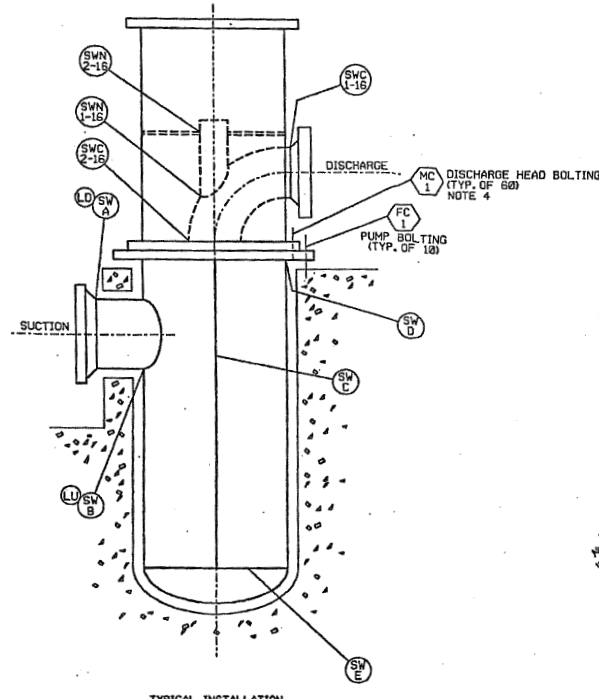

TYPICAL INSTALLATION
RHR PUMPS
2AP202
2BP202
2CP202
2DP202

NOTE:
1) LINE CONTINUATIONS:
a) 2AP202: SUCTION - XI-HBB-218-4
DISCHARGE- XI-GBB-201-1
b) 2BP202: SUCTION - XI-HBB-218-5
DISCHARGE- XI-GBB-201-2
c) 2CP202: SUCTION - XI-HBB-218-6
DISCHARGE- XI-GBB-219-1
d) 2DP202: SUCTION - XI-HBB-218-7
DISCHARGE- XI-GBB-219-4
2) PUMPS ARE SEISMIC CLASS I.
3) HEX DENOTES COMPONENTS SUBJECT TO VT-3 EXAMINATION PER SUBSECTION IWF. REFER TO EXAM PLAN TABLE.
4) REFERENCE FCR ME-1477-M.

REFERENCE DRAWINGS:

ISI-M-51	ASME SECTION XI BOUNDARY P&ID
M1-E11-C002	INGERSOLL RAND F-34APKD 3G1EX3-C
ISI-2P-202	PRESERVICE INSPECTION DRAWING

NO.	DATE	REVISIONS	BY	CHKD	ISI ENGR	ENGR SUPV	PROJ ENGR	PROJ APPR
0		ISSUED FOR 1ST INSP. INTERVAL.	TP	RC	RC			

SCALE NONE | DRAWN CADD/TP

BECHTEL
SAN FRANCISCO

LIMERICK GENERATING STATION
UNITS 1 & 2
PHILADELPHIA ELECTRIC COMPANY

ISI EQUIP. DWG. - REACTOR BUILDING
RHR PUMPS 2AP, 2BP, 2CP & 2DP202
SUPPORTS AND BODY WELDS - UNIT 2

JOB No.	DRAWING No.	REV.
8031	XI-2P-202	0

NOT FOR CONSTRUCTION | PAGE 1 OF 1

S/U 2-51A

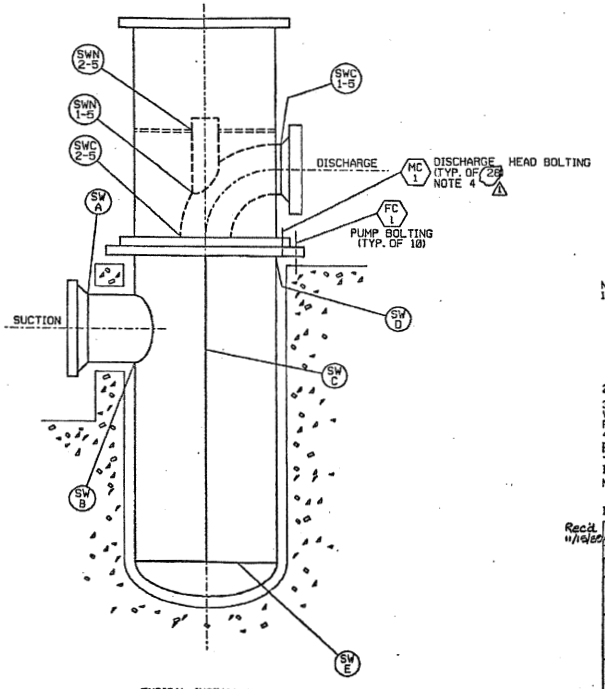

TYPICAL INSTALLATION
CORE SPRAY PUMPS
2AP206
2BP206
2CP206
2DP206

NOTES:
1) LINE CONTINUATIONS:
a) 2AP206: SUCTION - XI-HBB-220-1
DISCHARGE- XI-GBB-213-1
b) 2BP206: SUCTION - XI-HBB-220-2
DISCHARGE- XI-GBB-212-1
c) 2CP206: SUCTION - XI-HBB-220-3
DISCHARGE- XI-GBB-213-2
d) 2DP206: SUCTION - XI-HBB-220-4
DISCHARGE- XI-GBB-212-2
2) C.S. PUMPS ARE SEISMIC CLASS I.
3) HEX DENOTES COMPONENTS SUBJECT TO VT-3 EXAMINATION PER SUBSECTION IWF. REFER TO EXAM PLAN TABLE.
4) REFERENCE FCR ME-1477-M.

REFERENCE DRAWINGS:

ISI-M-52	ASME SECTION XI BOUNDARY P&ID
M1-E21-C001	INGERSOLL RAND F-25APKD 36INX1-K
ISI-2P-206	PRESERVICE INSPECTION DRAWING

Recd 11/16/86

NO.	DATE	REVISIONS	BY	CHKD	CE CHKD	GROUP CHIEF	PROJ CHIEF	MECH ENGR
1		ISSUED FOR 1ST INSP. INTERVAL	TP	RC	RC			

SCALE NONE DRAWN CADD/TP

BECHTEL
SAN FRANCISCO

LIMERICK GENERATING STATION
UNITS 1 & 2
PHILADELPHIA ELECTRIC COMPANY

ISI EQUIP. DWG. - REACTOR BUILDING
CORE SPRAY PUMPS 2AP THRU 2DP206
SUPPORTS AND BODY WELDS - UNIT 2

JOB No.	DRAWING No.	REV.
8031	XI-2P-206	1

NOT FOR CONSTRUCTION | PAGE 1 OF 1

16X
Microfilm Supervisor

8031-ISI-M-42 SH. 1 OF

CONT. ASME SECTION XI NOTES: (CONT. FROM COORD. H,D)

G. LINES FROM ASME CODE CLASS 1, 2, AND 3 (QUALITY GROUP A, B AND C) PROCESS PIPE TO & ACTIVE INSTRUMENTATION ARE SHOWN WITH COLOR CODING WITH THE COLOR REPRESENTING THE ASME CODE CLASS FROM THE PROCESS LINE THROUGH THE INSTRUMENT VALVE. THE ASME CODE CLASS FROM THE INSTRUMENT VALVE UP TO AND INCLUDING THE INSTRUMENT VALVE, THE ASME CODE CLASS FROM THE PROCESS LINE THROUGH THE ROOT VALVE IS THE SAME AS THE PROCESS LINE EXCEPT THAT IT IS EXEMPT. THE ASME CODE CLASS FROM THE ROOT VALVE THROUGH THE INSTRUMENT VALVE IS AS FOLLOWS: (REF. SPEC. 8031-M-100, DWGS. SH. 15)

1) ASME CODE CLASS 2 EXEMPT FOR ASME CODE CLASS 1 PROCESS LINES.

2) ASME CODE CLASS 3 EXEMPT FOR ASME CODE CLASS 2 AND 3 PROCESS LINES.

H. FOR PIPE TO TUBING ADAPTERS SEE DRAWING M-030-0003 SHEET 6 OF 2 IN SPECIFICATION 8031-M-033 FOR THE ADAPTER QUALITY GROUP CLASSIFICATION.

(CONT. ON COORD. H,D)

CONT. ASME SECTION XI NOTES: (CONT. FROM COORD. G,D)

A' COMPONENT SUPPORTS LOCATED BETWEEN THE DYWIDAG (1)-(2) NOTE J AND THE FIRST SEISMIC ANCHOR OR THE END OF THE CONTAINMENT PIPING, AS APPLICABLE, SHALL BE REPAIRED, REPLACED OR MODIFIED IN ACCORDANCE WITH THE ORIGINAL DESIGN REQUIREMENTS AND ASME SECTION XI WITH THE EXCEPTION THAT VISUAL EXAMINATIONS, PRESSURE TESTS AND PERIODIC INSERVICE INSPECTIONS ARE NOT REQUIRED. THE REQUIREMENTS OF ASME SECTION XI IWA-4000 AND IWA-7000 SHALL APPLY IN ACCORDANCE WITH FSAR'S REPAIR AND REPLACEMENT PROGRAM. SEE THE APPLICABLE FABRICATION ISOMETRIC DRAWING TO IDENTIFY THE SPECIFIC COMPONENT SUPPORTS.

K. NOT APPLICABLE.

L. LINE DCA-309 (4059) PIPING AND VALVES ARE PART OF THE REACTOR PROTECTION SYSTEM (PRIMARY CONTAINMENT HIGH PRESSURE PRESSURE TRIP) AND ARE RECLASSIFIED TO QUALITY GROUP B PER FSAR PARAGRAPH 7.2.1.1.2. NOTE A ABOVE SHALL APPLY IN ACCORDANCE WITH ASME CLASS 2 AND IWC REQUIREMENTS.

M. NOT APPLICABLE.

N. NOT APPLICABLE.

O. REFER TO THE CRL FOR INSERVICE TEST PROGRAM, DESIGN QUALITY INFORMATION IN THE "ASME SECTION XI IST" FIELD.

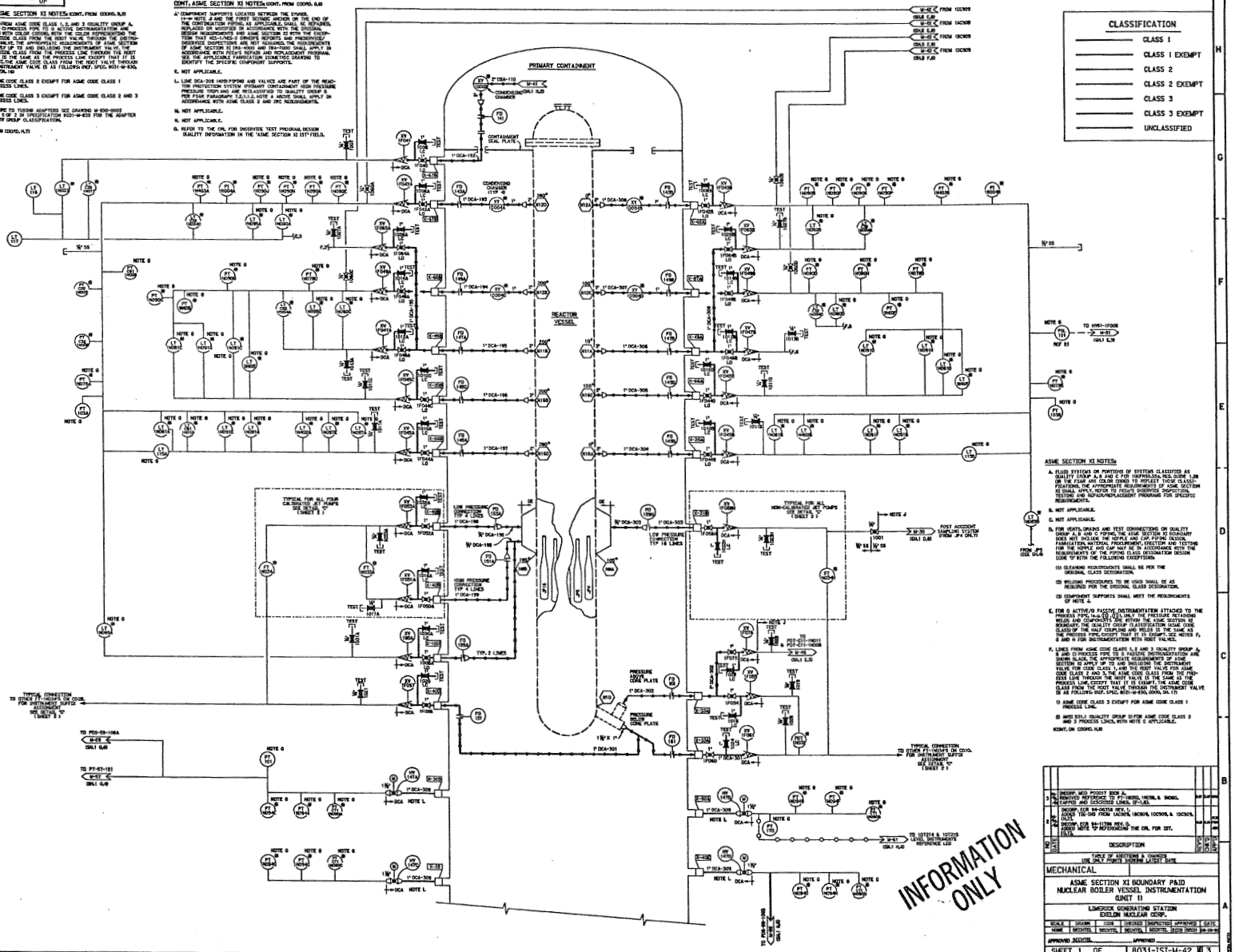

CLASSIFICATION

- CLASS 1
- CLASS 1 EXEMPT
- CLASS 2
- CLASS 2 EXEMPT
- CLASS 3
- CLASS 3 EXEMPT
- UNCLASSIFIED

ASME SECTION XI NOTES:

A. FLUID SYSTEMS OR PORTIONS OF SYSTEMS CLASSIFIED AS QUALITY GROUP A, B AND C FOR (NOPRIN,SSD,RCD,DCD) LIN OR THE FSAR ARE COLOR CODED TO REFLECT THOSE CLASSIFICATIONS. THE APPROPRIATE REQUIREMENTS OF ASME SECTION XI SHALL BE APPLIED IN ACCORDANCE WITH THE ASME SECTION XI INSERVICE INSPECTION PROGRAM AND REPAIR/REPLACEMENT PROGRAMS FOR SPECIFIC REQUIREMENTS.

B. NOT APPLICABLE.

C. NOT APPLICABLE.

D. FOR VENTS, DRAINS AND TEST CONNECTIONS ON QUALITY GROUP A, B AND C PIPING, THE ASME SECTION XI BOUNDARY DOES NOT INCLUDE THE NIPPLE AND CAP. PIPING DESIGN, FABRICATION, MATERIAL PROCUREMENT, ERECTION AND TESTING FOR THE NIPPLE AND CAP MAY BE IN ACCORDANCE WITH THE REQUIREMENTS OF THE PIPING CLASS DESIGNATION DESIGN CODE "D" WITH THE FOLLOWING EXCEPTIONS:

(1) CLEANING REQUIREMENTS SHALL BE PER THE ORIGINAL CLASS DESIGNATION.

(2) WELDING PROCEDURES TO BE USED SHALL BE AS REQUIRED FOR THE ORIGINAL CLASS DESIGNATION.

(3) COMPONENT SUPPORTS SHALL MEET THE REQUIREMENTS OF NOTE A.

E. FOR G ACTIVE/D PASSIVE INSTRUMENTATION ATTACHED TO THE PROCESS PIPE, H-G (D) (E), ONLY THE PRESSURE RETAINING WELDS AND COMPONENTS WITHIN THE ASME SECTION XI BOUNDARY (ASME CODE CLASS 1, 2 AND 3 JURISDICTION) SHALL BE CLASSIFIED. THE HALF COUPLING AND WELDS IS THE SAME AS THE PROCESS PIPE, EXCEPT THAT IT IS EXEMPT. SEE NOTES F, G AND H FOR INSTRUMENTATION WITH ROOT VALVES.

F. LINES FROM ASME CODE CLASS 1, 2 AND 3 (QUALITY GROUP A, B AND C) PROCESS PIPE TO & PASSIVE INSTRUMENTATION ARE SHOWN WITH COLOR CODING WITH THE COLOR REPRESENTING THE ASME CODE CLASS FROM THE PROCESS LINE THROUGH THE INSTRUMENT VALVE. FOR CODE CLASS 1, AND THE ROOT VALVE FOR ASME CODE CLASS 2 AND 3, THE ASME CODE CLASS FROM THE PROCESS LINE THROUGH THE ROOT VALVE IS THE SAME AS THE PROCESS LINE, EXCEPT THAT IT IS EXEMPT. THE ASME CODE CLASS FROM THE ROOT VALVE THROUGH THE INSTRUMENT VALVE IS AS FOLLOWS: (REF. SPEC. 8031-M-100, DWGS. SH. 17)

1) ASME CODE CLASS 3 EXEMPT FOR ASME CODE CLASS 1 PROCESS LINE.

2) ANSI B31.1 (QUALITY GROUP D) FOR ASME CODE CLASS 2 AND 3 PROCESS LINES, WITH NOTE G APPLICABLE.

(CONT. ON COORD. H,D)

NO.	DATE	DESCRIPTION	REVD	CHD	DATE
3	7-9-96	INCORP. MCD 90001 (NOW A. REVISED REFERENCE TO PT-1NE5PS, 1NE5PS, & 3NE5PS. DELETED SHEET 3			
2	8-29-95	INCORP. ECR 94-06258 REV. 1 ADDED TIE-INS FROM 1AC9PS, 1BC9PS, 1CC9PS, & 1DC9PS. DELETED			
1	8-29-95	INCORP. ECR 94-11396 REV. 0 ADDED NOTE "O" REFERENCING THE CRL FOR IST.			

FORM OF ADDITIONS & CHANGES USE ONLY POINTS SHOWING LATEST DATE

MECHANICAL

ASME SECTION XI BOUNDARY P&ID
NUCLEAR BOILER VESSEL INSTRUMENTATION
(UNIT 1)

LIMERICK GENERATING STATION
EXELON NUCLEAR CORP.

SCALE	DRAWN	TCDB	CHECKED	INSPECTED	APPROVED	DATE
NONE	REGISTERED	REGISTERED	REGISTERED	REGISTERED	REGISTERED	08-29-95

APPROVED REGISTERED APPROVED

SHEET 1 OF 1 | 8031-ISI-M-42 | 3

INFORMATION ONLY

ISI-M-42 (SHT. 1)

8031-ISI-M-42 SH. 3 OF

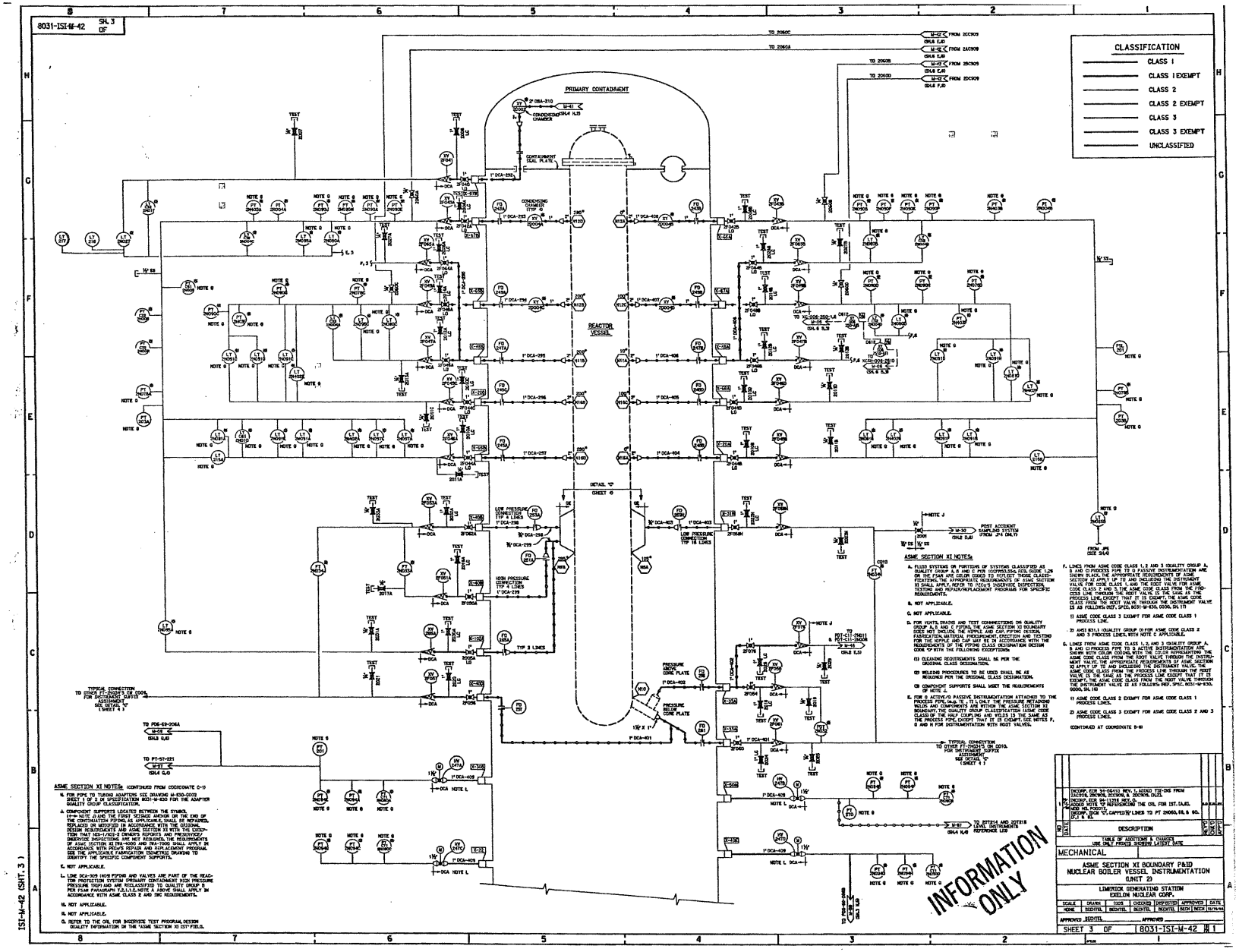

CLASSIFICATION

- CLASS 1
- CLASS 1 EXEMPT
- CLASS 2
- CLASS 2 EXEMPT
- CLASS 3
- CLASS 3 EXEMPT
- UNCLASSIFIED

ASME SECTION XI NOTES: (CONTINUED FROM COORDINATE C-11)

G. FOR PIPE TO TURBINE ADAPTERS, SEE DRAWING M-E50-0009 SHEET 1 OF 3 OR SPECIFICATION 8031-M-E50 FOR THE ADAPTER QUALITY GROUP CLASSIFICATION.

H. COMPONENT SUPPORTS LOCATED BETWEEN THE STARRED (***) NOTE J2 AND THE FIRST DESIGNED ANCHOR OR THE END OF THE CONTINUATION PIPING AS APPLICABLE, SHALL BE REPAIRED, REPLACED OR MODIFIED IN ACCORDANCE WITH THE ORIGINAL DESIGN REQUIREMENTS AND ASME SECTION XI WITH THE EXCEPTION THAT NDE/VT-2 ONGOING REPORTS AND PRECEDING/DURING INSERVICE INSPECTIONS ARE NOT REQUIRED. THE REQUIREMENTS OF ASME SECTION XI IWA-4000 AND IWA-7000 SHALL APPLY IN ACCORDANCE WITH PREVIOUS REVISION AND REPLACEMENT PROGRAM. REFER TO THE ISI PROGRAM FOR INSERVICE SUPPORTS DRAWING TO IDENTIFY THE SPECIFIC COMPONENT SUPPORTS.

I. NOT APPLICABLE.

L. LINE DCA-309 (4016 FSPDR AND VALVES ARE PART OF THE REACTOR PROTECTION SYSTEM (PRIMARY CONTAINMENT HIGH PRESSURE PROGRAM AND RECLASSIFIED TO QUALITY GROUP B, CLASS 1 EXEMPT. ASME CLASS 2 AND 1WC REQUIREMENTS.

M. NOT APPLICABLE.

N. NOT APPLICABLE.

O. REFER TO THE ISI FOR INSERVICE TEST PROGRAM, DESIGN QUALITY INFORMATION IN THE "ASME SECTION XI IST" FIELD.

ASME SECTION XI NOTES:

A. FLUID SYSTEMS ON PORTIONS OF SYSTEMS CLASSIFIED AS QUALITY GROUP A, B AND C PER REGULATORY GUIDE 1.26 OR THE FSAR ARE COLOR CODED TO REFLECT THOSE CLASSES. FOLLOWING, THE APPROPRIATE REQUIREMENTS OF ASME SECTION XI SHALL APPLY. REFER TO PEDG'S INSERVICE INSPECTION, TESTING AND REPAIR/REPLACEMENT PROGRAMS FOR SPECIFIC REQUIREMENTS.

B. NOT APPLICABLE.

C. NOT APPLICABLE.

D. FOR VENTS, DRAINS AND TEST CONNECTIONS ON QUALITY GROUP A, B, AND C PIPING, THE ASME SECTION XI BOUNDARY DOES NOT INCLUDE THE NOZZLE AND CAP. PIPING DESIGN, FABRICATION, MATERIAL PROCUREMENT, ERECTION AND TESTING ARE TO BE PERFORMED IN ACCORDANCE WITH THE REQUIREMENTS OF THE PIPING CLASS DESIGNATION DESIGN CODE "C" WITH THE FOLLOWING EXCEPTIONS:

(1) CLEANING REQUIREMENTS SHALL BE PER THE ORIGINAL CLASS DESIGNATION.

(2) WELDING PROCEDURES TO BE USED SHALL BE AS REQUIRED PER THE ORIGINAL CLASS DESIGNATION.

(3) COMPONENT SUPPORTS SHALL MEET THE REQUIREMENTS OF NOTE J.

E. FOR D ACTIVE/D PASSIVE INSTRUMENTATION ATTACHED TO THE PROCESS PIPE, (N.D. TE. 1 TO 1.0 ONLY) THE PRESSURE RETAINING VALVES AND COMPONENTS ARE WITHIN THE ASME SECTION XI BOUNDARY. THE QUALITY GROUP CLASSIFICATION (ASME CODE CLASS) OF THE PROCESS PIPE AND VALVES ARE THE SAME AS THE PROCESS PIPE, EXCEPT "PLAY" IT IS EXCEPT SEE NOTES F, G AND H FOR INSTRUMENTATION WITH ROOT VALVES.

F. LINES FROM ASME CODE CLASS 1, 2 AND 3 (QUALITY GROUP A, B AND C) PROCESS PIPE TO D PASSIVE INSTRUMENTATION ARE SHOWN BLACK. THE APPROPRIATE REQUIREMENTS OF ASME SECTION XI APPLY UP TO AND INCLUDING THE INSTRUMENT VALVE FOR CODE CLASS 1, AND THE ROOT VALVE FOR ASME CODE CLASS 2 AND 3. THE ASME CODE CLASS FROM THE PROCESS LINE THROUGH THE ROOT VALVE IS EXEMPT. THE ASME CODE CLASS FROM THE ROOT VALVE THROUGH THE INSTRUMENT VALVE IS AS FOLLOWS (REF. SPEC. 8031-M-E50, GOOGL SH. 1.1)

1) ASME CODE CLASS 3 EXEMPT FOR ASME CODE CLASS 1 PROCESS LINE.

2) ANSI B31.1 (QUALITY GROUP D) FOR ASME CODE CLASS 2 AND 3 PROCESS LINES, WITH NOTE C APPLICABLE.

G. LINES FROM ASME CODE CLASS 1, 2, AND 3 (QUALITY GROUP A, B AND C) PROCESS PIPE TO G ACTIVE INSTRUMENTATION ARE SHOWN WITH COLOR CODING WITH THE COLOR REPRESENTING THE ASME CODE CLASS FROM THE ROOT VALVE THROUGH THE INSTRUMENT VALVE. THE APPROPRIATE REQUIREMENTS OF ASME SECTION XI APPLY UP TO AND INCLUDING THE INSTRUMENT VALVE. THE ASME CODE CLASS FROM THE PROCESS LINE THROUGH THE ROOT VALVE IS THE SAME AS THE PROCESS LINE EXCEPT THAT IT IS EXEMPT. THE ASME CODE CLASS FROM THE ROOT VALVE THROUGH THE INSTRUMENT VALVE IS AS FOLLOWS (REF. SPEC. 8031-M-E50, GOOGL SH. 1.1)

1) ASME CODE CLASS 2 EXEMPT FOR ASME CODE CLASS 1 PROCESS LINES.

2) ASME CODE CLASS 3 EXEMPT FOR ASME CODE CLASS 2 AND 3 PROCESS LINES.

(CONTINUED AT COORDINATE B-18)

NO.	DATE	DESCRIPTION	BY	CHK	APP
1		ENGWP, ECR 94-06410 REV. 1, ADDED TIE-INS FROM DIAGRAM DRAWING 2E50-0048-1 (DOCKETS, DLES. ENGWP, ECR 94-11398 REV. 0, ADDED NOTE "D" REFERENCING THE COIL FOR IST. LABEL AND NEW FOOOTLY. ENGWP, DCR "C" CAPPED 3/4" LINES TO PT 2N060, 68, & 60. (1.) & 60.			

TABLE OF ADDITIONS & CHANGES
USE ONLY PRINTS SHOWING LATEST DATE

MECHANICAL

ASME SECTION XI BOUNDARY P&ID
NUCLEAR BOILER VESSEL INSTRUMENTATION
(UNIT 2)

LIMERICK GENERATING STATION
EXELON NUCLEAR CORP.

SCALE	DRAWN	DDS	CHECKED	INSPECTED	APPROVED	DATE
NONE	SCOTTEL	SCOTTEL	SCOTTEL	SCOTTEL	MCH	MCH 10/14/94

APPROVED SCOTTEL APPROVED

SHEET 3 OF 8031-ISI-M-42 REV 1

ISI-M-42 (SHT. 3)

8031-ISI-M-57 SH. 1 OF

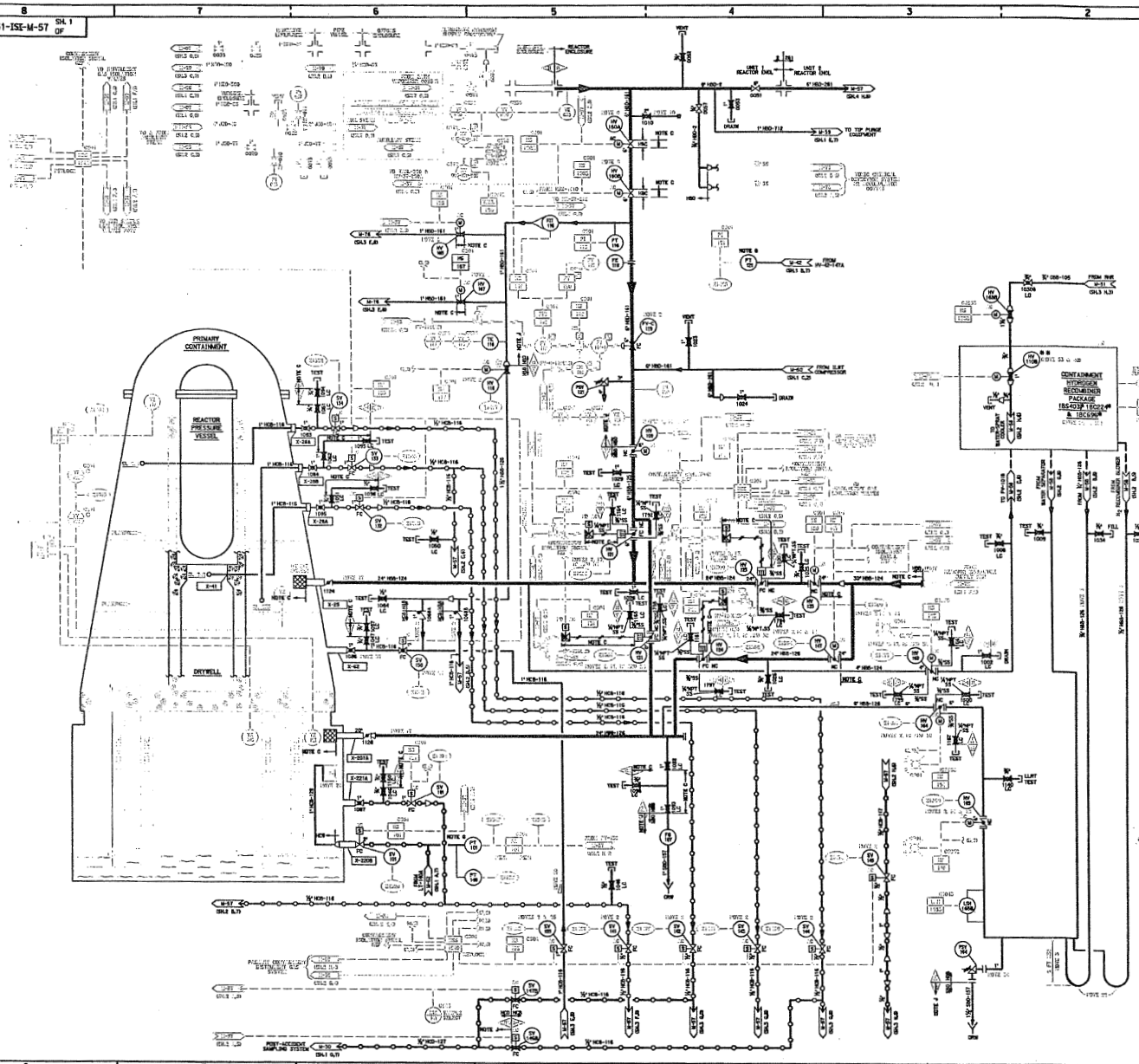

CLASSIFICATION

- CLASS 1
- CLASS 1 EXEMPT
- CLASS 2
- CLASS 2 EXEMPT
- CLASS 3
- CLASS 3 EXEMPT
- UNCLASSIFIED

ASME SECTION XI NOTES:

A. FLUID SYSTEMS OR PORTIONS OF SYSTEMS CLASSIFIED AS QUALITY GROUP A,B AND C PER 10CFR50.55a, REG. GUIDE 1.26 ON THE P.&I.DR. ARE COLOR CODED TO REFLECT THOSE CLASSIFICATIONS. THE APPROPRIATE REQUIREMENTS OF ASME SECTION XI SHALL APPLY. REFER TO PECO'S INSERVICE INSPECTION, TESTING AND REPAIR/REPLACEMENT PROGRAMS FOR SPECIFIC REQUIREMENTS.

B. NOT APPLICABLE.

C. PIPING, VALVES AND EQUIPMENT SHOWN WITHIN THIS SYMBOL ---- NOTE C1 AS WELL AS THEIR SUPPORTS SHALL BE REPAIRED, REPLACED OR MODIFIED IN ACCORDANCE WITH THE ORIGINAL DESIGN REQUIREMENTS AND ASME SECTION XI. THE REQUIREMENTS OF ASME SECTION XI IWA-4000 AND IWA-7000 SHALL APPLY IN ACCORDANCE WITH PECO'S REPAIR AND REPLACEMENT PROGRAM, PRESERVICE/INSERVICE INSPECTIONS ARE NOT REQUIRED.

D. FOR VENTS, DRAINS AND TEST CONNECTIONS ON QUALITY GROUP A,B AND C PIPING, THE ASME SECTION XI BOUNDARY DOES NOT INCLUDE THE NIPPLE AND CAP. PIPING DESIGN, FABRICATION, MATERIAL PROCUREMENT, ERECTION AND TESTING FOR THE NIPPLE AND CAP MAY BE IN ACCORDANCE WITH THE REQUIREMENTS OF THE PIPING CLASS DESIGNATION DESIGN CODE "D" WITH THE FOLLOWING EXCEPTIONS:

(1) CLEANING REQUIREMENTS SHALL BE PER THE ORIGINAL CLASS DESIGNATION.

(2) WELDING PROCEDURES TO BE USED SHALL BE AS REQUIRED PER THE ORIGINAL CLASS DESIGNATION.

(3) COMPONENT SUPPORTS SHALL MEET THE REQUIREMENTS OF NOTE A.

E. FOR Q ACTIVE/Q PASSIVE INSTRUMENTATION ATTACHED TO THE PROCESS PIPE, (e.g. (1) (2) (3)), ONLY THE PRESSURE RETAINING WELDS AND COMPONENTS THE WITHIN THE ASME SECTION XI BOUNDARY. THE QUALITY GROUP CLASSIFICATION (ASME CODE CLASS) OF THE PIPE SHALL BE THE SAME AS THE ASME CODE CLASS AS THE PROCESS PIPE, EXCEPT THAT IT IS EXEMPT. SEE NOTES F, G AND H FOR INSTRUMENTATION WITH ROOT VALVES.

F. LINES FROM ASME CODE CLASS 1,2 AND 3 (QUALITY GROUP A, B AND C) PROCESS PIPE TO Q PASSIVE INSTRUMENTATION ARE SHOWN BLACK. THE APPROPRIATE REQUIREMENTS OF ASME SECTION XI APPLY UP TO AND INCLUDING THE INSTRUMENT ROOT VALVE FOR CODE CLASS 1, AND THE ROOT VALVE FOR ASME CODE CLASS 2 AND 3. THE ASME CODE CLASS FROM THE PROCESS LINE THROUGH THE ROOT VALVE IS THE SAME AS THE PROCESS LINE, EXCEPT THAT IT IS EXEMPT. THE ASME CODE CLASS FROM THE ROOT VALVE THROUGH THE DISTRIBUTOR VALVE IS AS FOLLOWS: REF. SPEC. 8031-M-430, GOOG, SH. 1T3

1) ASME CODE CLASS 3 EXEMPT FOR ASME CODE CLASS 1 PROCESS LINES.

2) ASME SCHL1 (QUALITY GROUP D) FOR ASME CODE CLASS 2 AND 3 PROCESS LINES, WITH NOTE C APPLICABLE.

G. LINES FROM ASME CODE CLASS 1,2,3 AND 3 (QUALITY GROUP A, B AND C) PROCESS PIPE TO Q ACTIVE INSTRUMENTATION ARE SHOWN WITH COLOR CODING, WITH THE COLOR REPRESENTING THE ASME CODE CLASS FROM THE ROOT VALVE THROUGH THE INSTRUMENT VALVE. THE APPROPRIATE REQUIREMENTS OF ASME SECTION XI APPLY UP TO AND INCLUDING THE INSTRUMENT VALVE. THE ASME CODE CLASS FROM THE PROCESS LINE THROUGH THE ROOT VALVE IS THE SAME AS THE PROCESS LINE, EXCEPT THAT IT IS EXEMPT. THE ASME CODE CLASS FROM THE ROOT VALVE THROUGH THE INSTRUMENT VALVE IS AS FOLLOWS: REF. SPEC. 8031-M-430, GOOG, SH. 1T3

1) ASME CODE CLASS 2 EXEMPT FOR ASME CODE CLASS 1 PROCESS LINES.

2) ASME CODE CLASS 3 EXEMPT FOR ASME CODE CLASS 2 AND 3 PROCESS LINES.

H. FOR PIPE TO TUBING ADAPTERS SEE DRAWING M-430-0002 SHEET 1 OF 2 IN SPECIFICATION 8031-M-430 FOR THE ADAPTER QUALITY GROUP CLASSIFICATION.

I. COMPONENT SUPPORTS LOCATED BETWEEN THE SYMBOL ---- NOTE J AND THE FIRST ANCHOR (WHICH OR THE END OF THE CONTAINATION PIPING, AS APPLICABLE) SHALL BE REPAIRED, REPLACED OR MODIFIED IN ACCORDANCE WITH THE ORIGINAL DESIGN REQUIREMENTS AND ASME SECTION XI WITH THE EXCEPTION THAT NSS-1/NSS-2 OWNER'S REPORTS AND PRESERVICE/INSERVICE INSPECTIONS ARE NOT REQUIRED. THE REQUIREMENTS OF ASME SECTION XI IWA-4000 AND IWA-7000 SHALL APPLY IN ACCORDANCE WITH PECO'S REPAIR AND REPLACEMENT PROGRAM. SEE THE APPLICABLE FABRICATION ISOMETRIC DRAWING TO IDENTIFY THE SPECIFIC COMPONENT SUPPORTS.

J. NOT APPLICABLE.

L. NOT APPLICABLE.

M. NOT APPLICABLE.

N. NOT APPLICABLE.

O. REFER TO THE CPL FOR INSERVICE TEST PROGRAM DESIGN QUALITY INFORMATION IN THE "ASME SECTION XI SCP" FIELD.

INFORMATION ONLY

NO	DATE	DESCRIPTION	DRAWN	CHECKED	APPROVED
6	96/96	RE-DESIGN, ECR LG 94-10993 REV. 0, ADDED NOTE "D".			
5		DESIGN, ECR LG 94-10993 REV. 0. REMOVED SET CLASSIFICATION REFERENCE FROM NOTES AND COMPONENTS GL13 & GL23.			

TABLE OF ADDITIONS & CHANGES
USE ONLY PARTS SHOWN LATEST DATE

MECHANICAL

ASME SECTION XI BOUNDARY P&ID
CONTAINMENT ATMOSPHERIC CONTROL
(UNIT 1 AND COMMON)

LIMERICK GENERATING STATION
EXELON NUCLEAR CORP.

SCALE	DRAWN	CHK	CHECKED	DESIGNED	APPROVED	DATE
NONE	BOCHTEL	BOCHTEL	BOCHTEL	BOCHTEL	BOCH	96-06-06

APPROVED BOCHTEL APPROVED

SHEET 1 OF | 8031-ISI-M-57 | 2

ISI-M-57 (SHT. 1)

8031-ISI-M-57 SH. 4

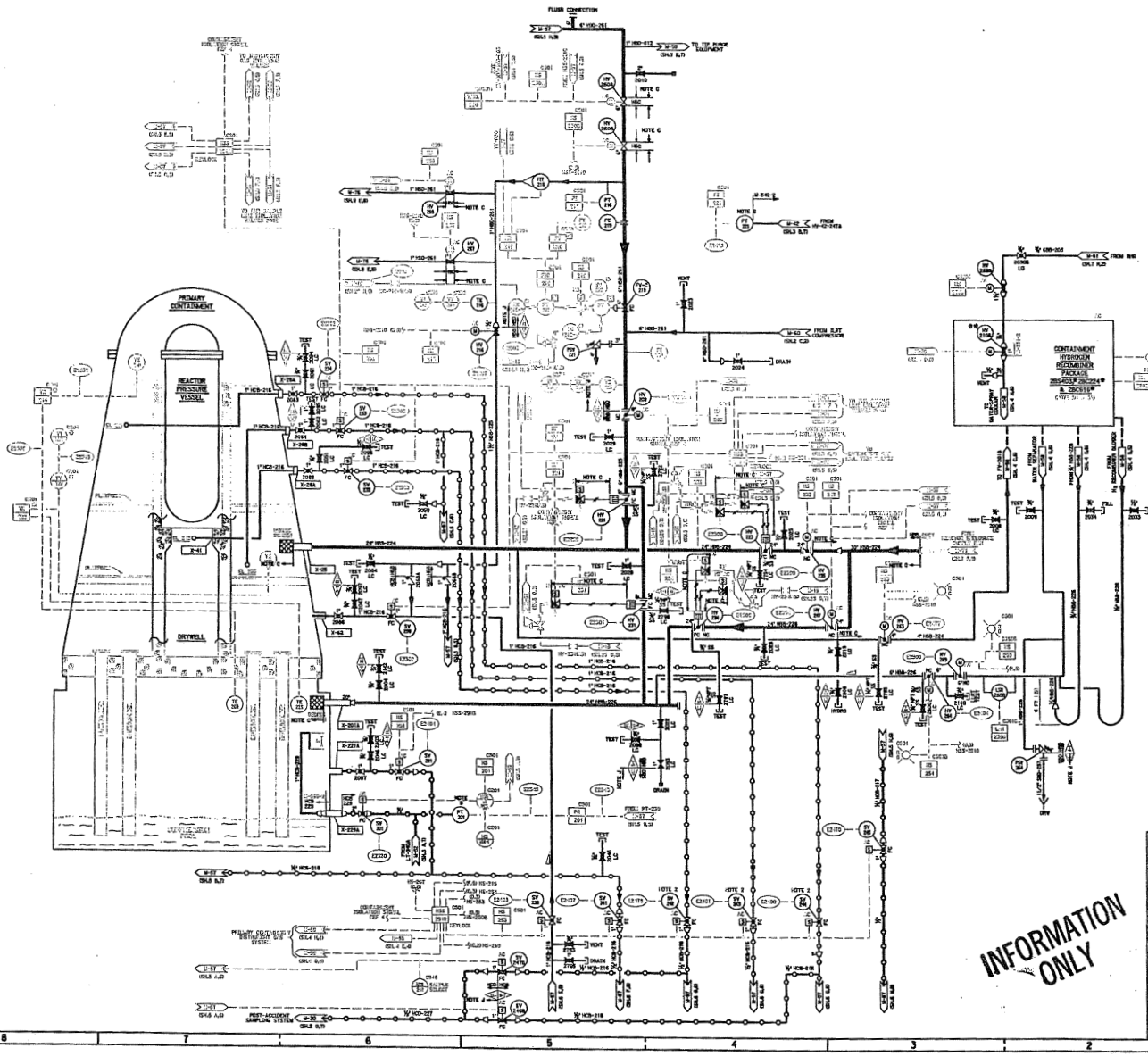

CLASSIFICATION

- CLASS 1
- CLASS 1 EXEMPT
- CLASS 2
- CLASS 2 EXEMPT
- CLASS 3
- CLASS 3 EXEMPT
- UNCLASSIFIED

ASME SECTION XI NOTES:

A. FLUID SYSTEMS OR PORTIONS OF SYSTEMS CLASSIFIED AS QUALITY GROUP A, B AND C PER 10CFR50.55a REG GUIDE 1.26 REV. 3 AND ASME SECTION III, NONNUCLEAR PIPING CLASSIFICATIONS, THE APPROPRIATE REQUIREMENTS OF ASME SECTION XI SHALL APPLY. REFER TO PEACH BOTTOM'S ASME SECTION XI TESTING AND REPAIR/REPLACEMENT PROGRAMS FOR SPECIFIC REQUIREMENTS.

B. NOT APPLICABLE.

C. PIPING, VALVES AND EQUIPMENT SHOWN WITHIN THIS SYMBOL ⊕ NOTE C) AS WELL AS THEIR SUPPORTS SHALL BE REPAIRED, REPLACED OR MODIFIED IN ACCORDANCE WITH THE ORIGINAL DESIGN REQUIREMENTS AND ASME SECTION XI. THE REQUIREMENTS OF ASME SECTION XI IWA-4000 AND IWA-7000 SHALL APPLY IN ACCORDANCE WITH PEACH'S REPAIR AND REPLACEMENT PROGRAM. PRESSURE/VISUAL/VISUAL INSPECTIONS ARE NOT REQUIRED.

D. FOR VENTS, DRAINS AND TEST CONNECTIONS ON QUALITY GROUP A/B/AND C PIPING, THE ASME SECTION XI BOUNDARY DOES NOT INCLUDE THE NIPPLE AND CAP PIPING DESIGN. FOR THE NIPPLE AND CAP PIPING DESIGN, EXECTION AND TESTING OF THE NIPPLE AND CAP MUST BE IN ACCORDANCE WITH THE REQUIREMENTS OF THE PIPING CLASS DESIGNATION DESIGN CODE SP WITH THE FOLLOWING EXCEPTIONS:

(1) CLEANING REQUIREMENTS SHALL BE PER THE ORIGINAL CLASS DESIGNATION.

(2) WELDING PROCEDURES TO BE USED SHALL BE AS REQUIRED PER THE ORIGINAL CLASS DESIGNATION.

(3) COMPONENT SUPPORTS SHALL MEET THE REQUIREMENTS OF NOTE A.

E. FOR G ACTIVE/G PASSIVE INSTRUMENTATION ATTACHED TO THE PROCESS PIPE, WHICH DO NOT SHARE THE PRESSURE RETAINING WELDS AND COMPONENTS THE WITHIN THE ASME SECTION XI BOUNDARY, THE QUALITY GROUP CLASSIFICATION SAME CODE CLASS OF THE HALF COUPLING AND WELDS IS THE SAME AS THE PROCESS PIPE, EXCEPT THAT IT IS EXEMPT. SEE NOTES F, G AND H FOR INSTRUMENTATION WITH ROOT VALVES.

F. LINES FROM ASME CODE CLASS 1, 2 AND 3 QUALITY GROUP A, B AND C PROCESS PIPE TO G PASSIVE INSTRUMENTATION ARE SHOWN PLACE THE APPROPRIATE REQUIREMENTS OF ASME SECTION XI APPLY UP TO AND INCLUDING THE INSTRUMENT VALVE. THE ASME CODE CLASS 1 AND 2 ROOT VALVE FOR SAME CODE CLASS 1 AND 2 PROCESS LINE THROUGH THE ROOT VALVE IS THE SAME AS THE PROCESS LINE EXCEPT THAT IT IS EXEMPT. THE ASME CODE CLASS FROM THE ROOT VALVE THROUGH THE INSTRUMENT VALVE IS AS FOLLOWS: REF. SPEC. 8031-M-630, 0000, SH. 175

(1) ASME CODE CLASS 3 EXEMPT FOR ASME CODE CLASS 1 PROCESS LINE.

(2) ANSI B31.1 QUALITY GROUP D1 FOR ASME CODE CLASS 2 AND 3 PROCESS LINES, WITH NOTE C APPLICABLE.

G. LINES FROM ASME CODE CLASS 1, 2, AND 3 QUALITY GROUP A, B AND C PROCESS PIPE TO G ACTIVE INSTRUMENTATION ARE SHOWN WITH COLOR CODING. WITH THE COLOR INDICATION ARE THE ASME CODE CLASS FROM THE ROOT VALVE THROUGH THE INSTRUMENT VALVE. THE APPROPRIATE REQUIREMENTS OF ASME SECTION XI APPLY UP TO AND INCLUDING THE INSTRUMENT VALVE. THE ASME CODE CLASS FROM THE PROCESS LINE THROUGH THE ROOT VALVE IS THE SAME AS THE PROCESS LINE EXCEPT THAT IT IS EXEMPT. THE ASME CODE CLASS FROM THE ROOT VALVE THROUGH THE INSTRUMENT VALVE IS AS FOLLOWS: REF. SPEC. 8031-M-630, 0000, SH. 182

(1) ASME CODE CLASS 2 EXEMPT FOR ASME CODE CLASS 1 PROCESS LINES.

(2) ASME CODE CLASS 3 EXEMPT FOR ASME CODE CLASS 2 AND 3 PROCESS LINES.

H. FOR PIPE TO TUBING ADAPTERS SEE DRAWING M-630-0002 SHEET 1 OF 2 IN SPECIFICATION 8031-M-630 FOR THE ADAPTER QUALITY GROUP CLASSIFICATION.

I. COMPONENT SUPPORTS LOCATED BETWEEN THE STANCHIONS ⊕ NOTE J) AND THE FIRST SUCHAC ANCHOR ON THE END OF THE CONTAINATION PIPING, AS APPLICABLE, SHALL BE REPAIRED, REPLACED OR MODIFIED IN ACCORDANCE WITH THE ORIGINAL DESIGN REQUIREMENTS AND ASME SECTION XI WITH THE EXCEPTION THAT NDE-1/NDE-2 OWNER'S REPORTS AND PRESSURE/VISUAL INSPECTION INSPECTIONS ARE NOT REQUIRED. THE REQUIREMENTS OF ASME SECTION XI IWA-4000 AND IWA-7000 SHALL APPLY IN ACCORDANCE WITH PEACH'S REPAIR AND REPLACEMENT PROGRAM. SEE THE APPLICABLE FABRICATION ISOMETRIC DRAWING TO IDENTIFY THE SPECIFIC COMPONENT SUPPORTS.

J. NOT APPLICABLE.

L. NOT APPLICABLE.

M. NOT APPLICABLE.

N. NOT APPLICABLE.

O. REFER TO THE CPL FOR INSERVICE TEST PROGRAM DESIGN QUALITY INFORMATION IN THE "ASME SECTION XI ISTP FIELD.

REV.	DATE	DESCRIPTION	DRAWN	CHECKED	APPROVED
3	96	NO-INCORP. ECN LR 94-10663 REV. 0.			
2	96	ALL.			
1	95	INCORP. ECN LR 94-10663 REV. 0.			
0	94	REMOVED IST CLASSIFICATION REFERENCE FROM NOTES AND COMPONENTS. SP-LED & SLAS			

TABLE OF ADDITIONS & CHANGES
USE ONLY POINTS SHOWING LATEST DATE

MECHANICAL

ASME SECTION XI BOUNDARY PAID
CONTAINMENT ATMOSPHERIC CONTROL
(UNIT 2)

LIMERICK GENERATING STATION
EXELON NUCLEAR CORP.

SCALE	DRAWN	DATE	CHECKED	INSPECTED	APPROVED	DATE
NONE	B.CUTLER		B.CUTLER	B.CUTLER	B.CUTLER	06/16/95

APPROVED SUPERVISOR: APPROVED

SHEET 4 OF 8031-ISI-M-57 3

ISI-M-57 (SHT. 4)

8031-ISI-M-59 SH. 1 OF

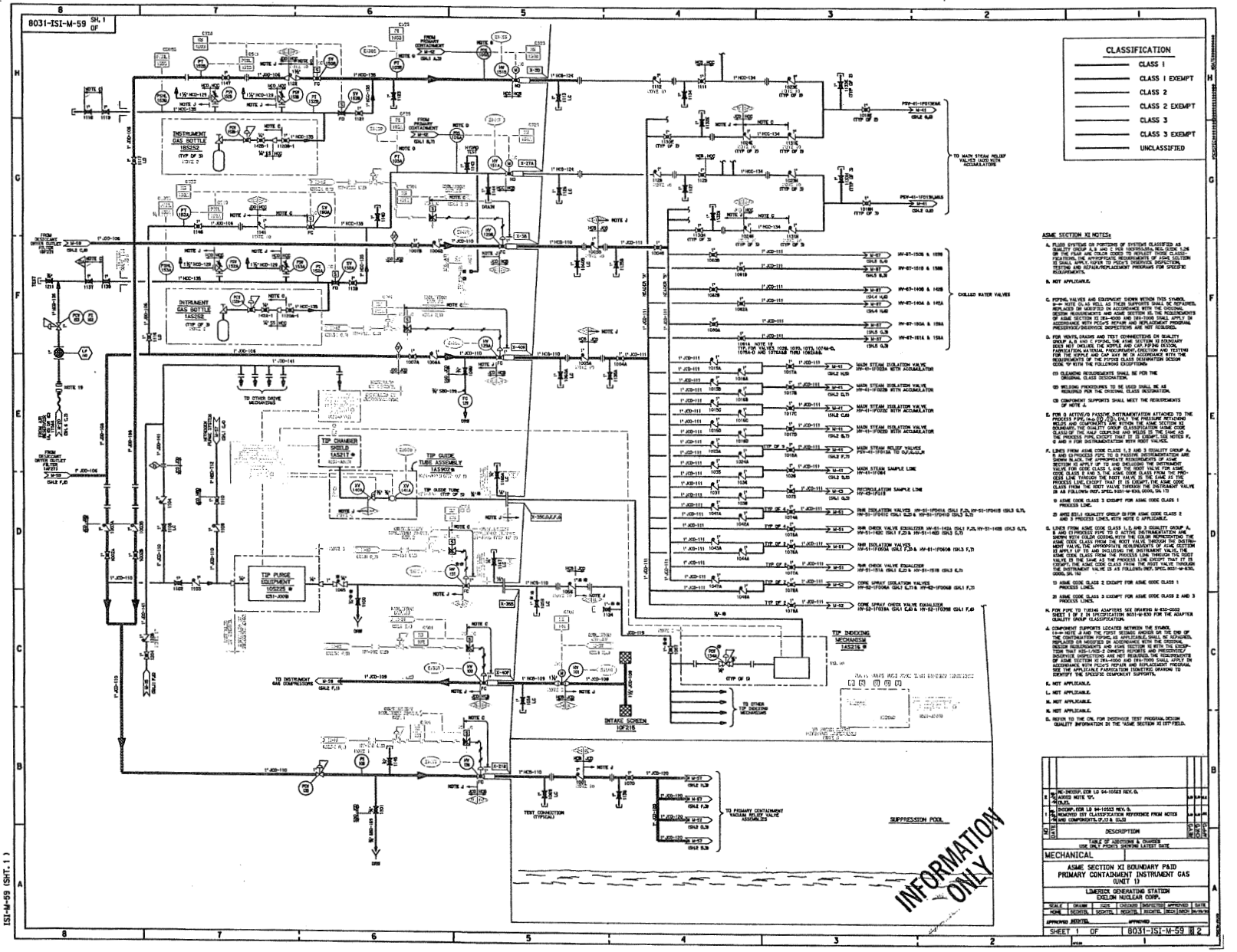

ASME SECTION XI NOTES:

A. PLUGS SYSTEMS OR PORTIONS OF SYSTEMS CLASSIFIED AS QUALITY GROUP A, B AND C NOT CONTAINING REC GROUP 1,2,3 PIPING ARE EXEMPT FROM ASME SECTION XI. WHERE CLASSIFICATIONS THE APPROPRIATE REQUIREMENTS OF ASME SECTION XI SHALL APPLY. REFER TO PECO'S INSERVICE INSPECTION, TESTING AND REPAIR/REPLACEMENT PROGRAM FOR SPECIFIC REQUIREMENTS.

B. NOT APPLICABLE.

C. PIPING, VALVES AND EQUIPMENT SHOWN WITHIN THIS SYMBOL ⊢⊣ NOTE C1,A2 WELL AS THEIR SUPPORTS SHALL BE REPAIRED, REPLACED OR MODIFIED ON ACCORDANCE WITH THE ORIGINAL DESIGN REQUIREMENTS AND ASME SECTION XI. THE REQUIREMENTS OF ASME SECTION XI 2B4-4000 AND 2B4-7000 SHALL APPLY IN ACCORDANCE WITH PECO'S REPAIR AND REPLACEMENT PROGRAM. PRESERVICE/INSERVICE INSPECTIONS ARE NOT REQUIRED.

D. FOR VENTS, DRAINS AND TEST CONNECTIONS OR QUALITY GROUP A, B AND C PIPING, THE ASME SECTION XI BOUNDARY DOES NOT INCLUDE THE VENTS AND CAP/PIPING DESIGN REQUIREMENTS. THE VENTS, DRAINS AND TEST CONNECTIONS FOR THAT VENTS AND CAP MAY BE IN ACCORDANCE WITH THE REQUIREMENTS OF THE PIPING CLASS DESIGNATION DESIGN CODE "P" WITH THE FOLLOWING EXCEPTIONS:

(1) CLEANING REQUIREMENTS SHALL BE FOR THE ORIGINAL CLASS DESIGNATION.

(2) WELDING PROCEDURES TO BE USED SHALL BE AS REQUIRED FOR THE ORIGINAL CLASS DESIGNATION.

(3) COMPONENT SUPPORTS SHALL MEET THE REQUIREMENTS OF NOTE A.

E. FOR D ACTIVE/D PASSIVE INSTRUMENTATION ATTACHED TO THE PROCESS PIPE (ALL (1), (2)), ONLY THE PRESSURE RETAINING WELDS AND COMPONENTS ARE WITHIN THE ASME SECTION XI BOUNDARY. THE QUALITY GROUP CLASSIFICATION (ASME CODE CLASS) OF THE HALF COUPLING AND WELDS IS THE SAME AS THE PROCESS PIPE, EXCEPT THAT BY EXEMPTION NOTES F, G AND H FOR INSTRUMENTATION WITH ROOT VALVES.

F. LINES FROM ASME CODE CLASS 1,2 AND 3 (QUALITY GROUP A, B AND C) PROCESS PIPE TO D PASSIVE INSTRUMENTATION ARE SHOWN IN JACK. THE APPROPRIATE REQUIREMENTS OF ASME SECTION XI APPLY UP TO AND INCLUDING THE INSTRUMENT VALVE. THE ASME CODE CLASS FROM THE PROCESS LINE THROUGH THE ROOT VALVE IS THE SAME AS THE PROCESS LINE, EXCEPT THAT IT IS EXEMPT. THE ASME CODE CLASS FROM THE ROOT VALVE THROUGH THE INSTRUMENT VALVE IS AS FOLLOWS (REF. SPEC. 8031-M-83G, DIGITAL SH. 1):

(1) ASME CODE CLASS 3 EXCEPT FOR ASME CODE CLASS 1 PROCESS LINE.

(2) AND (3) (QUALITY GROUP B) FOR ASME CODE CLASS 2 AND 3 PROCESS LINES, WITH NOTE C APPLICABLE.

G. LINES FROM ASME CODE CLASS 1,2,3 AND 3 (QUALITY GROUP A, B AND C) PROCESS PIPE TO D ACTIVE INSTRUMENTATION ARE SHOWN WITH COLOR CODING WITH THE COLOR REPRESENTING THE ASME CODE CLASS FROM THE ROOT VALVE THROUGH THE INSTRUMENT VALVE. THE APPROPRIATE REQUIREMENTS OF ASME SECTION XI APPLY UP TO AND INCLUDING THE INSTRUMENT VALVE. THE ASME CODE CLASS FROM THE PROCESS LINE THROUGH THE ROOT VALVE IS THE SAME AS THE PROCESS LINE, EXCEPT THAT IT IS EXEMPT. THE ASME CODE CLASS FROM THE ROOT VALVE THROUGH THE INSTRUMENT VALVE IS AS FOLLOWS (REF. SPEC. 8031-M-83G, DIGITAL SH. 1):

(1) ASME CODE CLASS 2 EXCEPT FOR ASME CODE CLASS 1 PROCESS LINES.

(2) ASME CODE CLASS 3 EXCEPT FOR ASME CODE CLASS 2 AND 3 PROCESS LINES.

H. FOR PIPE TO TUBING ADAPTERS SEE DRAWING M-83G-0002 SHEET 1 OF 2 IN SPECIFICATION 8031-M-83G FOR THE ADAPTER QUALITY GROUP CLASSIFICATION.

I. COMPONENT SUPPORTS LOCATED BETWEEN THE SYMBOL ⊢⊣ NOTE J AND THE FIRST SEISMIC ANCHOR OR THE END OF THE CONTAINMENT PIPING, AS APPLICABLE, SHALL BE REPAIRED, REPLACED OR MODIFIED ON ACCORDANCE WITH THE ORIGINAL DESIGN REQUIREMENTS AND ASME SECTION XI WITH THE EXCEPTION THAT THE ASME SECTION XI 2B4-4000 AND 2B4-7000 SHALL BE SUBJECT TO INSPECTIONS ARE NOT REQUIRED. THE REQUIREMENTS OF ASME SECTION XI 2B4-4000 AND 2B4-7000 SHALL APPLY IN ACCORDANCE WITH PECO'S REPAIR AND REPLACEMENT PROGRAM. SEE THE APPLICABLE FABRICATION ISOMETRIC DRAWING TO IDENTIFY THE SPECIFIC COMPONENT SUPPORTS.

J. NOT APPLICABLE.

L. NOT APPLICABLE.

M. NOT APPLICABLE.

N. NOT APPLICABLE.

O. REFER TO THE CPL FOR INSERVICE TEST PROGRAM/DESIGN QUALITY INFORMATION IN THE ASME SECTION XI 1ST FIELD.

REV.	DATE	DESCRIPTION	DRAWN	CHECKED	APPROVED
2	94-10	RE-INCORP. ECR LG 94-10563 REV. 0. ADDED NOTE "O". (G,J,K)	LB	LB	MM
1	94-10	INCORP. ECR LG 94-10553 REV. 0. REMOVED 1ST CLASSIFICATION REFERENCE FROM NOTES AND COMPONENTS (F,I,E & G,L)	LB	LB	MM

TABLE OF ADDITIONS & CHANGES
USE ONLY POINTS SHOWING LATEST DATE

MECHANICAL

ASME SECTION XI BOUNDARY P&ID
PRIMARY CONTAINMENT INSTRUMENT GAS
(UNIT 1)

LIMERICK GENERATING STATION
EXELON NUCLEAR CORP.

SCALE	DRAWN	DATE	CHECKED	INSPECTED	APPROVED	DATE
NONE	REGISTER	REGISTER	REGISTER	REGISTER	REGISTER	MM/DD/YY

APPROVED REGISTER | APPROVED

SHEET 1 OF | 8031-ISI-M-59 | 2

ISI-M-59 (SHT. 1)

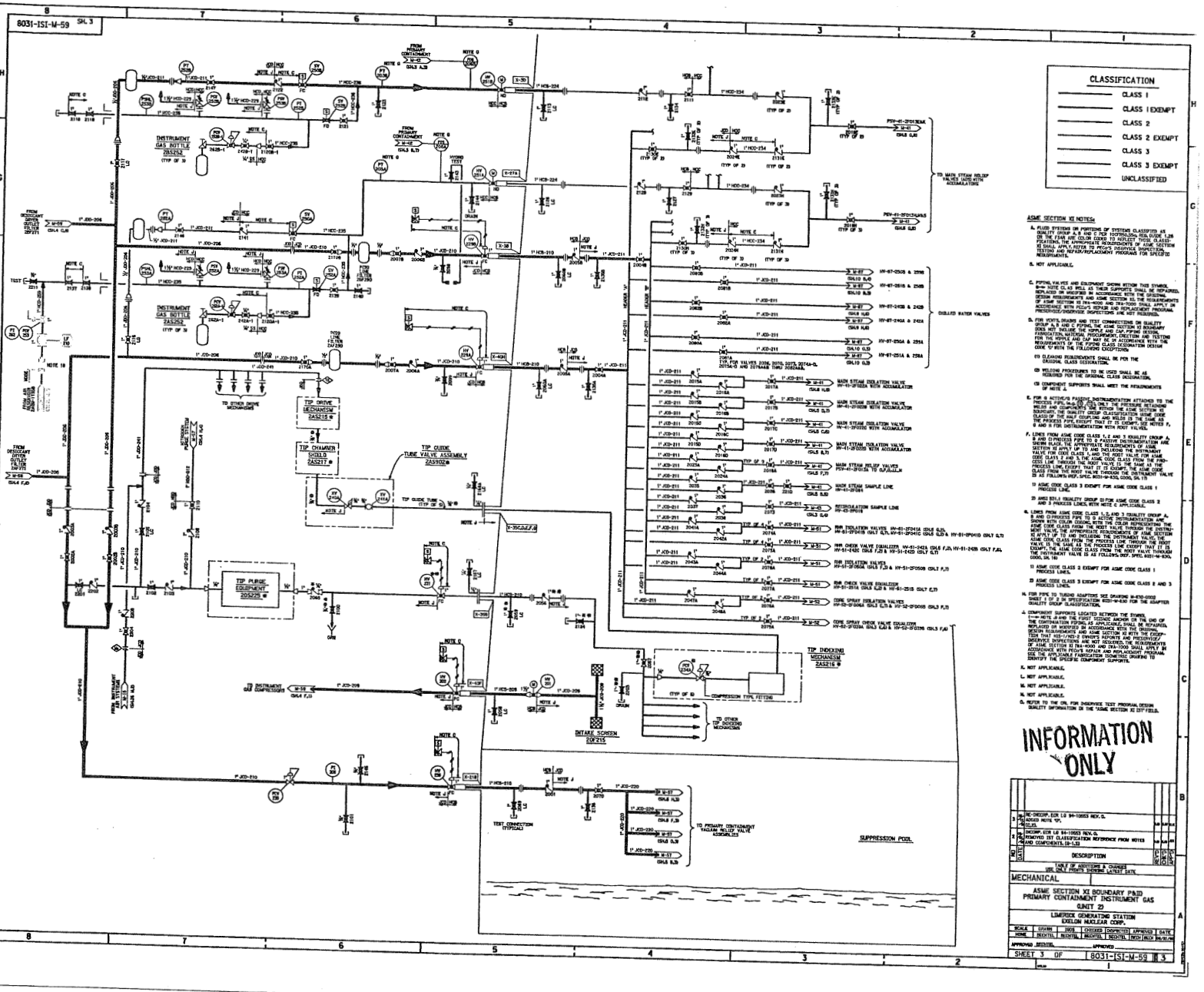
8031-ISI-M-59 SH. 3
ISI-M-59 (SHT. 3)
INSTRUMENT GAS BOTTLE 2AS252
TIP DRIVE MECHANISM 2AS215
TIP CHAMBER SHIELD 2AS217
TIP GUIDE TUBE VALVE ASSEMBLY 2AS102
TIP PURGE EQUIPMENT 2DS225
TIP INDEXING MECHANISM 2AS216
INTAKE SCREEN 2DF215
SUPPRESSION POOL
TO MAIN STEAM RELIEF VALVES (ADS) WITH ACCUMULATORS
DISILLED WATER VALVES
TO PRIMARY CONTAINMENT VACUUM RELIEF VALVE ASSEMBLIES
TEST CONNECTION (TYPICAL)
TO OTHER TIP INDEXING MECHANISMS
COMPRESSION TYPE FITTING
TO OTHER DRIVE MECHANISMS
INFORMATION ONLY
CLASSIFICATION
CLASS 1
CLASS 1 EXEMPT
CLASS 2
CLASS 2 EXEMPT
CLASS 3
CLASS 3 EXEMPT
UNCLASSIFIED
ASME SECTION XI NOTES:
A. FLUID SYSTEMS OR PORTIONS OF SYSTEMS CLASSIFIED AS QUALITY GROUP A, B AND C FOR 10CFR50.55A, 50A, 50B, 50C, 50D OR THE FSAR ARE COLOR CODED TO REFLECT THOSE CLASSIFICATIONS. THE APPROPRIATE REQUIREMENTS OF ASME SECTION XI SHALL APPLY. REFER TO PECO'S INSERVICE INSPECTION, TESTING AND REPAIR/REPLACEMENT PROGRAMS FOR SPECIFIC REQUIREMENTS.
B. NOT APPLICABLE.
C. PIPING, VALVES AND EQUIPMENT SHOWN WITHOUT THIS SYMBOL, ⊕=⊕ NOTE CL AS WELL AS THEIR SUPPORTS SHALL BE REPAIRED, REPLACED OR MODIFIED IN ACCORDANCE WITH THE ORIGINAL DESIGN REQUIREMENTS AND ASME SECTION XI. THE REQUIREMENTS OF ASME SECTION XI IWA-4000 AND IWA-7000 SHALL APPLY IN ACCORDANCE WITH PECO'S REPAIR AND REPLACEMENT PROGRAM. PRESERVICE/INSERVICE INSPECTIONS ARE NOT REQUIRED.
D. FOR VENTS, DRAINS AND TEST CONNECTIONS ON QUALITY GROUP A, B AND C PIPING, THE ASME SECTION XI BOUNDARY DOES NOT INCLUDE THE NIPPLE AND CAP. PIPING DESIGN, FABRICATION, MATERIAL PROCUREMENT, ERECTION AND TESTING FOR THE NIPPLE AND CAP MAY BE IN ACCORDANCE WITH THE REQUIREMENTS OF THE PIPING CLASS DESIGNATION DESIGN CODE "C" WITH THE FOLLOWING EXCEPTIONS:
(1) CLEANING REQUIREMENTS SHALL BE FOR THE ORIGINAL CLASS DESIGNATION.
(2) WELDING PROCEDURES TO BE USED SHALL BE AS REQUIRED FOR THE ORIGINAL CLASS DESIGNATION.
(3) COMPONENT SUPPORTS SHALL MEET THE REQUIREMENTS OF NOTE J.
E. FOR A ACTIVE/IS PASSIVE INSTRUMENTATION ATTACHED TO THE PROCESS PIPE, ⊕=⊕ NOTE CL ONLY THE PRESSURE RETAINING WELD AND EQUIPMENT SHALL BE WITHIN THE ASME SECTION XI BOUNDARY. THE QUALITY GROUP CLASSIFICATION ASME CODE CLASS OF THE HALF COUPLING AND WELDS IS THE SAME AS THE PROCESS PIPE, EXCEPT THAT IT IS EXEMPT. SEE NOTES F, G AND H FOR INSTRUMENTATION WITH ROOT VALVES.
F. LINES FROM ASME CODE CLASS 1, 2 AND 3 QUALITY GROUP A, B AND C PROCESS PIPE TO A PASSIVE INSTRUMENTATION ARE SHOWN BLACK. THE APPROPRIATE REQUIREMENTS OF ASME SECTION XI APPLY UP TO AND INCLUDING THE INSTRUMENT VALVE FOR CODE CLASS 1, AND THE ROOT VALVE FOR ASME CODE CLASS 2 AND 3. THE ASME CODE CLASS FROM THE PROCESS LINE THROUGH THE ROOT VALVE IS THE SAME AS THE PROCESS LINE, EXCEPT THAT IT IS EXEMPT. THE ASME CODE CLASS FROM THE ROOT VALVE THROUGH THE INSTRUMENT VALVE IS AS FOLLOWS: DEF. SPEC. 8031-M-830, 0000, SH. 16)
1) ASME CODE CLASS 3 EXEMPT FOR ASME CODE CLASS 1 PROCESS LINE.
2) ASME CODE CLASS 3 EXEMPT FOR ASME CODE CLASS 2 AND 3 PROCESS LINES, WITH NOTE C APPLICABLE.
G. LINES FROM ASME CODE CLASS 1, 2, AND 3 QUALITY GROUP A, B AND C PROCESS PIPE TO A ACTIVE INSTRUMENTATION ARE SHOWN WITH COLOR CODING, WITH THE COLOR REPRESENTING THE ASME CODE CLASS FROM THE ROOT VALVE THROUGH THE INSTRUMENT VALVE. THE APPROPRIATE REQUIREMENTS OF ASME SECTION XI APPLY UP TO AND INCLUDING THE INSTRUMENT VALVE. THE ASME CODE CLASS FROM THE PROCESS LINE THROUGH THE ROOT VALVE IS THE SAME AS THE PROCESS LINE, EXCEPT THAT IT IS EXEMPT. THE ASME CODE CLASS FROM THE ROOT VALVE THROUGH THE INSTRUMENT VALVE IS AS FOLLOWS: DEF. SPEC. 8031-M-830, 0000, SH. 16)
1) ASME CODE CLASS 2 EXEMPT FOR ASME CODE CLASS 1 PROCESS LINES.
2) ASME CODE CLASS 3 EXEMPT FOR ASME CODE CLASS 2 AND 3 PROCESS LINES.
H. FOR PIPE TO TUBING ADAPTERS SEE DRAWING M-830-0002 SHEET 1 OF 2 IN SPECIFICATION 8031-M-830 FOR THE ADAPTER QUALITY GROUP CLASSIFICATION.
J. COMPONENT SUPPORTS LOCATED BETWEEN THE SYMBOL ⊕=⊕ NOTE J AND THE FIRST SEISMIC ANCHOR OR THE END OF THE CONTINUATION PIPING, AS APPLICABLE, SHALL BE REPAIRED, REPLACED OR MODIFIED IN ACCORDANCE WITH THE ORIGINAL DESIGN REQUIREMENTS AND ASME SECTION XI WITH THE EXCEPTION THAT NSS-1/NCS-2 OWNER'S REPORTS AND THE PRESERVICE/INSERVICE INSPECTIONS ARE NOT REQUIRED. THE REQUIREMENTS OF ASME SECTION XI IWA-4000 AND IWA-7000 SHALL APPLY IN ACCORDANCE WITH PECO'S REPAIR AND REPLACEMENT PROGRAM. SEE THE APPLICABLE FABRICATION ISOMETRIC DRAWING TO IDENTIFY THE SPECIFIC COMPONENT SUPPORTS.
K. NOT APPLICABLE.
L. NOT APPLICABLE.
M. NOT APPLICABLE.
N. NOT APPLICABLE.
O. REFER TO THE OR. FOR INSERVICE TEST PROGRAM, DESIGN QUALITY INFORMATION IN THE "ASME SECTION XI IST" FIELD.
NO. DATE DESCRIPTION REV'D CHK'D APP'D
3 RE-ENCORP. EOR LG 94-10053 REV. G. ADDED NOTE "O". (CC.E3)
2 ENCORP. EOR LG 94-10053 REV. G. REMOVED IST CLASSIFICATION REFERENCE FROM NOTES AND COMPONENTS. (0-1.3)
MECHANICAL
ASME SECTION XI BOUNDARY P&ID
PRIMARY CONTAINMENT INSTRUMENT GAS
(UNIT 2)
LIMERICK GENERATING STATION
EXELON NUCLEAR CORP.
SCALE GRAPH 1905 CHECKED DISPATCHED APPROVED DATE
NONE BECHTEL BECHTEL BECHTEL BECHTEL RECH RECH
APPROVED BECHTEL APPROVED
SHEET 3 OF 8031-ISI-M-59 3

8031-ISI-M-52 SH 1 OF

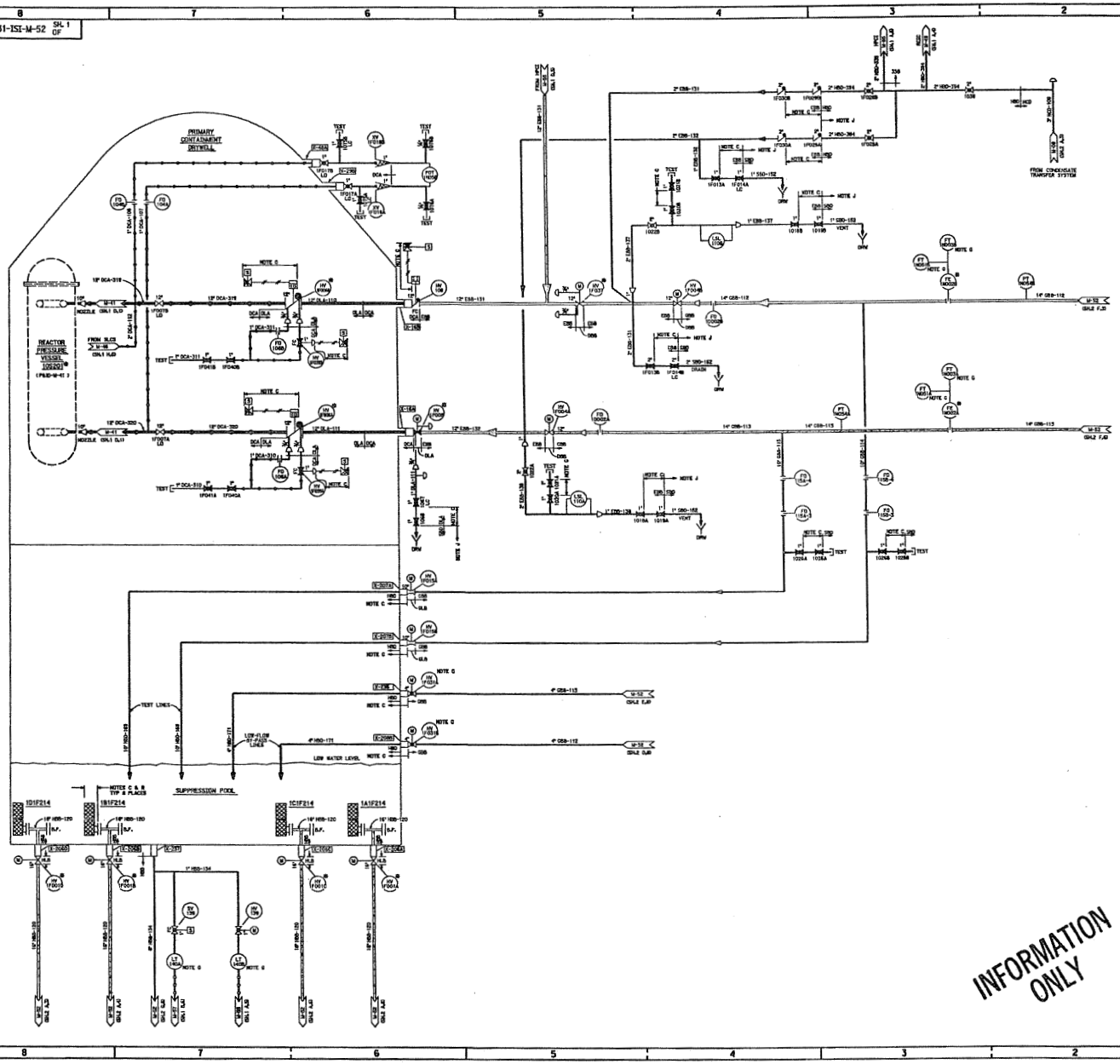

CLASSIFICATION

- CLASS 1
- CLASS 1 EXEMPT
- CLASS 2
- CLASS 2 EXEMPT
- CLASS 3
- CLASS 3 EXEMPT
- UNCLASSIFIED

ASME SECTION XI NOTES:

A. FLUID SYSTEMS OR PORTIONS OF SYSTEMS CLASSIFIED AS QUALITY GROUP A, B AND C PER 10CFR50.55a, REG.GUIDE 1.26 OR THE FSAR ARE COLOR CODED TO REFLECT THESE CLASSIFICATIONS. THE APPROPRIATE REQUIREMENTS OF ASME SECTION XI SHALL APPLY. REFER TO PEQ'S INSERVICE INSPECTION, TESTING AND REPAIR/REPLACEMENT PROGRAMS FOR SPECIFIC REQUIREMENTS.

B. NOT APPLICABLE.

C. PIPING, VALVES AND EQUIPMENT SHOWN WITHIN THIS SYMBOL ⊕ NOTE C, AS WELL AS THEIR SUPPORTS SHALL BE REPAIRED, REPLACED OR MODIFIED IN ACCORDANCE WITH THE ORIGINAL DESIGN REQUIREMENTS AND ASME SECTION XI. THE REQUIREMENTS OF ASME SECTION XI IWA-4000 AND IWA-7000 SHALL APPLY IN ACCORDANCE WITH PEQ'S REPAIR AND REPLACEMENT PROGRAM. PRESERVICE/INSERVICE INSPECTIONS ARE NOT REQUIRED.

D. FOR VENTS, DRAINS AND FIRST CONNECTIONS ON QUALITY GROUP A,B AND C PIPING, THE ASME SECTION XI BOUNDARY DOES NOT INCLUDE THE NIPPLE AND CAP. PIPING DESIGN, FABRICATION, INSPECTION, CLEANING, WELDING, DESIGN AND TESTING FOR THE NIPPLE AND CAP MUST BE IN ACCORDANCE WITH THE REQUIREMENTS OF THE PIPING CLASS DESIGNATION DESIGN CODE "B" WITH THE FOLLOWING EXCEPTIONS:

(1) CLEANING REQUIREMENTS SHALL BE PER THE ORIGINAL CLASS DESIGNATION.

(2) WELDING PROCEDURES TO BE USED SHALL BE AS REQUIRED PER THE ORIGINAL CLASS DESIGNATION.

(3) COMPONENT SUPPORTS SHALL MEET THE REQUIREMENTS OF NOTE A.

E. FOR G ACTIVE/G PASSIVE INSTRUMENTATION ATTACHED TO THE PROCESS PIPE, ALL (G) WELDS ONLY THE PRESSURE RETAINING WELDS AND COMPONENTS WITHIN THE ASME CODE SECTION XI BOUNDARY, THE QUALITY GROUP CLASSIFICATION USING CODE CLASS OF THE HALF COUPLING AND WELDS IS THE SAME AS THE PROCESS PIPE, EXCEPT THAT IT IS EXEMPT. SEE NOTES F, G AND H FOR INSTRUMENTATION WITH ROOT VALVES.

F. LINES FROM ASME CODE CLASS 1,2 AND 3 QUALITY GROUP A, B AND C1 PROCESS PIPE TO G PASSIVE INSTRUMENTATION ARE SHOWN GLACK. THE APPROPRIATE REQUIREMENTS OF ASME SECTION XI APPLY UP TO AND INCLUDING THE INSTRUMENT VALVE FOR CODE CLASS 1, AND THE ROOT VALVE FOR ASME CODE CLASS 2 AND 3. THE ASME CODE CLASS FROM THE PROCESS LINE THROUGH THE ROOT VALVE IS THE SAME AS THE PROCESS LINE, EXCEPT THAT IT IS EXEMPT. THE ASME CODE CLASS FROM THE ROOT VALVE THROUGH THE INSTRUMENT VALVE IS AS FOLLOWS:REF. SPEC. 8031-M-030, GOOGL SH. 1E3

1) ASME CODE CLASS 3 EXEMPT FOR ASME CODE CLASS 1 PROCESS LINE.

2) ANSI B31.1 QUALITY GROUP D FOR ASME CODE CLASS 2 AND 3 PROCESS LINES, WITH NOTE C APPLICABLE.

G. LINES FROM ASME CODE CLASS 1,2 AND 3 QUALITY GROUP A, B AND C1 PROCESS PIPE TO G ACTIVE INSTRUMENTATION ARE SHOWN WITH COLOR CODING, WITH THE COLOR REPRESENTING THE ASME CODE CLASS FROM THE ROOT VALVE THROUGH THE INSTRUMENT VALVE. THE APPROPRIATE REQUIREMENTS OF ASME SECTION XI APPLY UP TO AND INCLUDING THE INSTRUMENT VALVE. THE ASME CODE CLASS FROM THE PROCESS LINE THROUGH THE ROOT VALVE IS THE SAME AS THE PROCESS LINE EXCEPT THAT IT IS EXEMPT. THE ASME CODE CLASS FROM THE ROOT VALVE THROUGH THE INSTRUMENT VALVE IS AS FOLLOWS:REF. SPEC. 8031-M-030, GOOGL SH. 1E3

1) ASME CODE CLASS 3 EXEMPT FOR ASME CODE CLASS 1 PROCESS LINES.

2) ASME CODE CLASS 3 EXEMPT FOR ASME CODE CLASS 2 AND 3 PROCESS LINES.

H. FOR PIPE TO THERMO ADAPTERS SEE DRAWING M-033-0060 AND SPECIFICATION 8031-M-030 FOR THE ADAPTER QUALITY GROUP CLASSIFICATION.

J. COMPONENT SUPPORTS LOCATED BETWEEN THE SYMBOL ⊕ NOTE J AND THE FIRST SEISMIC ANCHOR OR THE END OF THE CONTINUATION PIPING, AS APPLICABLE, SHALL BE REPAIRED, REPLACED OR MODIFIED IN ACCORDANCE WITH THE ORIGINAL DESIGN REQUIREMENTS AND ASME SECTION XI WITH THE EXCEPTION THAT IWA-4000 AND IWA-7000 SHALL APPLY. PRESERVICE/INSERVICE INSPECTIONS ARE NOT REQUIRED. THE REQUIREMENTS OF ASME SECTION XI IWA-4000 AND IWA-7000 SHALL APPLY IN ACCORDANCE WITH PEQ'S REPAIR AND REPLACEMENT PROGRAM. SEE THE APPLICABLE FABRICATION FORMITRIC DRAWING TO IDENTIFY THE SPECIFIC COMPONENT SUPPORTS.

K. NOT APPLICABLE.

L. NOT APPLICABLE.

M. NOT APPLICABLE.

N. NOT APPLICABLE.

S. MOV FLOW VALVES (AP-SP-1F013A,B) LIMIT SWITCHES ARE SET SUCH THAT THE VALVE IS IN THE SEE OPEN POSITION SO THAT SYSTEM RESPONSE TIME CAN BE SATISFIED.

P. REFER TO THE CRL FOR INSERVICE TEST PROGRAM.DESIGN QUALITY INFORMATION IN THE ASME SECTION XI IST FIELD.

R. STRAINER AND SUPPORTS DESIGNATED BY THIS NOTE ARE SUBJECT TO AUGMENTED INSPECTION UNDER THE ISI PROGRAM. SPECIFICATION NE-42, ASME XI.

NO.	DATE	DESCRIPTION	REVISED BY	CHECKED BY	APPROVED BY
8	9/24/97	DECOMP. FOR SR-G0154 REV. 0. REVISED SPECIFICATION FOR SR-1E8L. SP-4L.			
7	9/24/97	DECOMP. FOR SR-G0161 REV. 0. AT VALVE 1F008 DRAIN CAPS TO WELDING CUT & CAPPED BYPASS PIPING AT 1F007,P.30 SEAL.			
6	9/24/97	DECOMP. TRI FORM. 97-02908 REV. 1. REMOVED BYPASS PIPING AT 1F006. P.30. 97-00201 REV. 1 REVISED 1A4L,1B,1F014 AND REPLACED 1A4L2,1G2F014 WITH BLIND FLANGE. ADDED NOTE "G". G8-4,7,8L,GL3.			

DESIGN BASIS

MECHANICAL

ASME SECTION XI BOUNDARY P&ID
CORE SPRAY
(UNIT 1)

LIMERICK GENERATING STATION
EXELON NUCLEAR CORP.

SCALE	DRAWN	CODE	CHECKED	INSPECTED	APPROVED	DATE
NONE	SEGNITEL	SEGNITEL	SEGNITEL	SEGNITEL	FAGEN	9/24/97

APPROVED SEGNITEL APPROVED

SHEET 1 OF 8031-ISI-M-52 B

ISI-M-52 (SHT. 1)

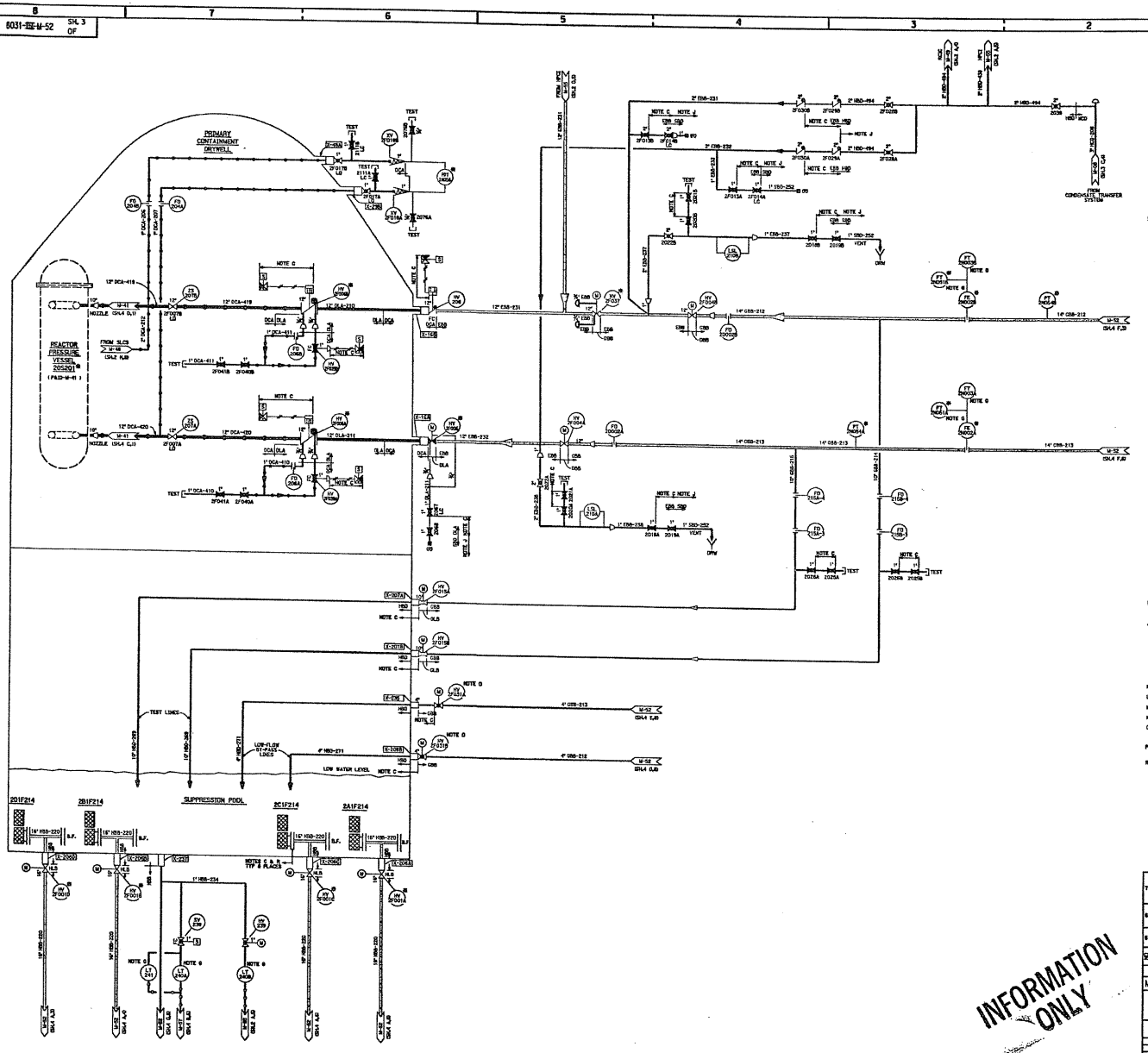

CLASSIFICATION

- CLASS 1
- CLASS 1 EXEMPT
- CLASS 2
- CLASS 2 EXEMPT
- CLASS 3
- CLASS 3 EXEMPT
- UNCLASSIFIED

ASME SECTION XI NOTES:

A. FLUID SYSTEMS OR PORTIONS OF SYSTEMS CLASSIFIED AS QUALITY GROUP A, B AND C PER 10CFR50.55a, REG. GUIDE 1.26 ON THE P.I.&D. ARE COLOR CODED TO REFLECT THOSE CLASSIFICATIONS. THE APPROPRIATE REQUIREMENTS OF ASME SECTION XI SHALL APPLY. REFER TO PEGA'S INSERVICE INSPECTION, TESTING AND REPAIR/REPLACEMENT PROGRAMS FOR SPECIFIC REQUIREMENTS.

B. NOT APPLICABLE.

C. PIPING, VALVES AND EQUIPMENT SHOWN WITHIN THIS SYMBOL ⊢⊣ NOTE C, AS WELL AS THEIR SUPPORTS SHALL BE REPAIRED, REPLACED OR MODIFIED IN ACCORDANCE WITH THE ORIGINAL DESIGN REQUIREMENTS AND ASME SECTION XI, THE REQUIREMENTS OF ASME SECTION III DIV.1-NB, NC, ND-3000 SHALL APPLY IN ACCORDANCE WITH PEGA'S REPAIR AND REPLACEMENT PROGRAM. PRESERVICE/INSERVICE INSPECTIONS ARE NOT REQUIRED.

D. FOR VENTS, DRAINS AND TEST CONNECTIONS ON QUALITY GROUP A, B AND C PIPING, THE ASME SECTION XI BOUNDARY DOES NOT INCLUDE THE NIPPLE AND CAP. PIPING DESIGN, FABRICATION, MATERIAL PROCUREMENT, ERECTION AND TESTING SHALL BE PERFORMED IN ACCORDANCE WITH THE REQUIREMENTS OF THE PIPING CLASS DESIGNATION DESIGN CODE "D" WITH THE FOLLOWING EXCEPTIONS:

(1) CLEANING REQUIREMENTS SHALL BE PER THE ORIGINAL CLASS DESIGNATION.

(2) WELDING PROCEDURES TO BE USED SHALL BE AS REQUIRED PER THE ORIGINAL CLASS DESIGNATION.

(3) COMPONENT SUPPORTS SHALL MEET THE REQUIREMENTS OF NOTE A.

E. NOT APPLICABLE.

F. LINES FROM ASME CODE CLASS 1, 2 AND 3 (QUALITY GROUP A, B AND C) PROCESS PIPE TO A PASSIVE INSTRUMENTATION AND SHOWN BLACK. THE APPROPRIATE REQUIREMENTS OF ASME SECTION XI APPLY UP TO AND INCLUDING THE INSTRUMENT VALVE FOR CODE CLASS 1, AND THE ROOT VALVE FOR ASME CODE CLASS 2 AND 3. THE ASME CODE CLASS FROM THE PROCESS LINE THROUGH THE ROOT VALVE IS THE SAME AS THE PROCESS LINE EXCEPT THAT IT IS EXEMPT. THE ASME CODE CLASS FROM THE ROOT VALVE THROUGH THE INSTRUMENT VALVE IS AS FOLLOWS:REF. SPEC. 8031-M-530, CODOL, SH.1B

(1) ASME CODE CLASS 3 EXEMPT FOR ASME CODE CLASS 1 PROCESS LINE.

(2) ANSI B31.1 (QUALITY GROUP D) FOR ASME CODE CLASS 2 AND 3 PROCESS LINES, WITH NOTE C APPLICABLE.

G. LINES FROM ASME CODE CLASS 1, 2, AND 3 (QUALITY GROUP A, B AND C) PROCESS PIPE TO G ACTIVE INSTRUMENTATION ARE SHOWN WITH COLOR CODING WITH THE COLOR REPRESENTING THE ASME CODE CLASS APPROPRIATE. DOES NOT INCLUDE THE INSTRUMENT VALVE. THE APPROPRIATE REQUIREMENTS OF ASME SECTION XI APPLY UP TO AND INCLUDING THE INSTRUMENT VALVE. THE ASME CODE CLASS FROM THE PROCESS LINE THROUGH THE ROOT VALVE IS THE SAME AS THE PROCESS LINE EXCEPT THAT IT IS EXEMPT. THE ASME CODE CLASS FROM THE ROOT VALVE THROUGH THE INSTRUMENT VALVE IS AS FOLLOWS:REF. SPEC. 8031-M-530, CODOL, SH.1B

(1) ASME CODE CLASS 2 EXEMPT FOR ASME CODE CLASS 1 PROCESS LINES.

(2) ASME CODE CLASS 3 EXEMPT FOR ASME CODE CLASS 2 AND 3 PROCESS LINES.

H. FOR TUBE TO TUBING ADAPTERS SEE DRAWING M-830-2202 SHEET 1 OF 2, SPECIFICATION 8031-M-530 FOR THE ADAPTER QUALITY GROUP CLASSIFICATION.

J. COMPONENT SUPPORTS LOCATED BETWEEN THE SYMBOL ⊢⊣ NOTE J AND THE FIRST SEISMIC ANCHOR ON THE END OF THE CONTAMINATION PIPING AS APPLICABLE, SHALL BE REPAIRED, REPLACED OR MODIFIED IN ACCORDANCE WITH THE ORIGINAL DESIGN REQUIREMENTS AND ASME SECTION XI. THE DESCRIPTION THAT NES-1/ANSI-2 CONVERS REPAIRS AND PREVENTIVE/INSERVICE INSPECTIONS ARE NOT REQUIRED. THE REQUIREMENTS OF ASME SECTION III DIV.-NCD AND DIV.-7000 SHALL APPLY IN ACCORDANCE WITH PEGA'S REPAIR AND REPLACEMENT PROGRAM. SEE THE APPLICABLE FABRICATION ISOMETRIC DRAWING TO IDENTIFY THE SPECIFIC COMPONENT SUPPORTS.

K. NOT APPLICABLE.

L. NOT APPLICABLE.

M. NOT APPLICABLE.

N. NOT APPLICABLE.

O. MIN FLOW VALVES HV-52-2F031A,B LIMIT SWITCHES ARE SET SUCH THAT THE VALVE IS IN THE 25% OPEN POSITION SO THAT SYSTEM RESPONSE TIME CAN BE SATISFIED.

P. REFER TO THE CDL FOR INSERVICE TEST PROGRAM DESIGN QUALITY INFORMATION IN THE ASME SECTION XI IST-FIELD.

R. STRAINER AND SUPPORTS DESIGNATED BY THIS NOTE ARE SUBJECT TO AUGMENTED INSPECTION UNDER THE IEB PROGRAM SPECIFICATION NE-02, ALSO, EE

NO.	DATE	DESCRIPTION	DRAWN	CHECKED	APPROVED
7		DNCORP, ECR 00-00037 REV.0 PER C0154004. CAPPED OFF 3/4" LINES TO VALVE HV-2F037, CF-CL.			
6		DNCORP, ECR 97-02021 REV.0. REVISED STRAINERS 2A8,C, DHF214, REPLACED STRAINERS 2A8,C, DHF214 WITH BLIND FLANGES. ADDED NOTE R. (B-R,F,G) CL-CL.			
5		DNCORP, ECR 95-03564 REV.0. CHANGED BYPASS PIPING FROM CLASS DLA TO CDO AT BODY TO BONNET BYPASS ON VALVE 2F037, CF.CL			

TABLE OF ADDITIONS & CHANGES
USE ONLY POINTS SHOWN LATEST DATE

MECHANICAL

ASME SECTION XI BOUNDARY PAID
CORE SPRAY
(UNIT 2)

LIMERICK GENERATING STATION
EXELON NUCLEAR CORP.

SCALE	DRAWN	TCM	CHECKED	INSPECTED	APPROVED	DATE
NONE	DESIGN	INCRITL	RESIDL	SECRTL	RCM	RCM 05/01/00

APPROVED DESIGN: APPROVED

SHEET 3 OF 8031-ISI-M-52 7

ISI-M-52 (SHT. 3)

8031-2SI-M-57 SH. 2 OF

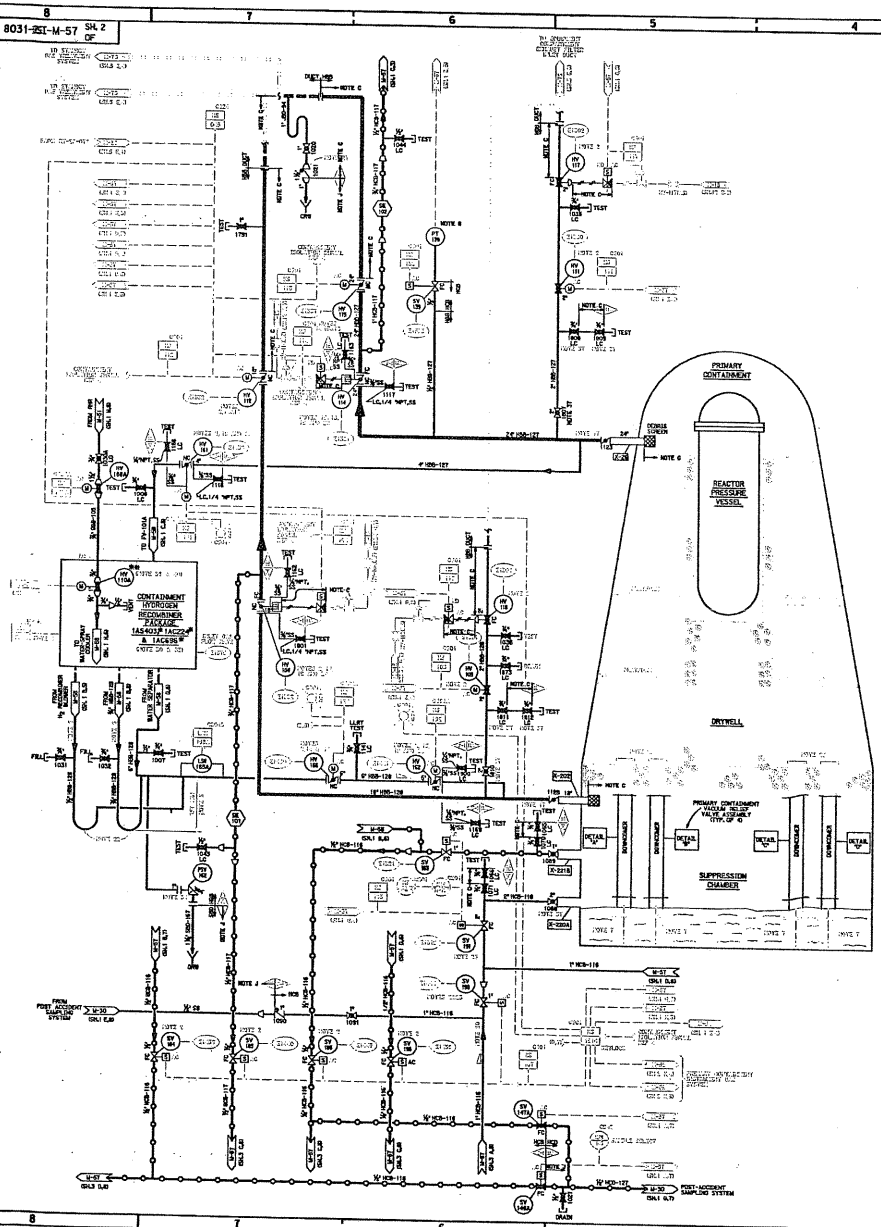

CLASSIFICATION

- CLASS 1
- CLASS 1 EXEMPT
- CLASS 2
- CLASS 2 EXEMPT
- CLASS 3
- CLASS 3 EXEMPT
- UNCLASSIFIED

ASME SECTION XI NOTES:

A. PIPED SYSTEMS ON PORTIONS OF SYSTEMS CLASSIFIED AS CLASS 1 EXEMPT, CLASS 2 EXEMPT, CLASSIFIED UNCLASSIFIED, OR ON THE FIRST ANCHOR OR SUPPORT BEYOND THE CLASS 1 FITTING THE APPROPRIATE REQUIREMENTS OF ASME SECTION XI SHALL APPLY. REFER TO PECO'S INSERVICE INSPECTION, TESTING AND REPAIR/REPLACEMENT PROGRAMS FOR SPECIFIC REQUIREMENTS.

B. NOT APPLICABLE.

C. PIPING, VALVES AND EQUIPMENT SHOWN WITHIN THIS SYMBOL WILL BE REPAIRED AS THEY SUPPORTS SHALL BE REPAIRED, REPLACED OR ALTERED IN ACCORDANCE WITH THE ORIGINAL DESIGN REQUIREMENTS AND MEET THE REQUIREMENTS OF ASME SECTION XI IWA-4000 AND IWA-7000 SHALL APPLY IN ACCORDANCE WITH PECO'S REPAIR AND REPLACEMENT PROGRAM. PRESERVICE/INSERVICE INSPECTIONS ARE NOT REQUIRED.

D. FOR VENTS, DRAINS AND TEST CONNECTIONS ON QUALITY GROUP A, B AND C PIPING, THE ASME SECTION XI BOUNDARY DOES NOT INCLUDE THE NIPPLE AND CAP. PIPING DESIGN, FABRICATION, MATERIAL, PROCUREMENT, INSPECTION AND TESTING FOR THE NIPPLE AND CAP MAY BE IN ACCORDANCE WITH THE ORIGINAL DESIGN CODE OR ASME SECTION III CONVENTION DESIGN CODE "D" WITH THE FOLLOWING EXCEPTIONS:

(1) CLEANING REQUIREMENTS SHALL BE PER THE ORIGINAL CLASS DESIGNATION.

(2) WELDING PROCEDURES TO BE USED SHALL BE AS REQUIRED PER THE ORIGINAL CLASS DESIGNATION.

(3) COMPONENT SUPPORTS SHALL MEET THE REQUIREMENTS OF NOTE A.

E. NOT APPLICABLE.

F. LINES FROM ASME CODE CLASS 1, 2 AND 3 QUALITY GROUP A, B AND C PROCESS PIPE TO THE INSTRUMENTATION AND SAMPLE BLOCK. THE APPLICABLE REQUIREMENTS OF ASME SECTION XI APPLY UP TO AND INCLUDING THE INSTRUMENT VALVE FOR CODE CLASS 1 AND THE ROOT VALVE FOR ASME CODE CLASS 2 AND 3. THE ASME CODE CLASS FROM THE PROCESS LINE TO THE ROOT VALVE SHALL BE THE SAME AS THE PROCESS LINE, EXCEPT THAT IT IS EXEMPT. THE ASME CODE CLASS FROM THE ROOT VALVE THROUGH THE INSTRUMENT VALVE IS AS FOLLOWS: REF. SPEC. M031-1A-0016, GOOD, SH. 13

(1) ASME CODE CLASS 3 EXEMPT FOR ASME CODE CLASS 1 PROCESS LINE.

(2) ANSI B31.1 QUALITY GROUP D FOR ASME CODE CLASS 2 AND 3 PROCESS LINES, WITH NOTE C APPLICABLE.

G. LINES FROM ASME CODE CLASS 1, 2, AND 3 QUALITY GROUP A, B AND C PROCESS PIPE TO THE INSTRUMENTATION APPLY. SHOWN WITH COLOR CODING WITH THE COLOR REPRESENTING THE ASME CODE CLASS FROM THE ROOT VALVE THROUGH THE DISTRIBUTION VALVE THE APPROPRIATE REQUIREMENTS OF ASME SECTION XI APPLY UP TO AND INCLUDING THE INSTRUMENT VALVE. THE ASME CODE CLASS FROM THE PROCESS LINE TO THE ROOT VALVE IS THE SAME AS THE PROCESS LINE EXCEPT THAT IT IS EXEMPT. THE ASME CODE CLASS FROM THE ROOT VALVE THROUGH THE INSTRUMENT VALVE IS AS FOLLOWS: REF. SPEC. M031-1A-0016, GOOD, SH. 13

(1) ASME CODE CLASS 2 EXEMPT FOR ASME CODE CLASS 1 PROCESS LINES.

(2) ASME CODE CLASS 3 EXEMPT FOR ASME CODE CLASS 2 AND 3 PROCESS LINES.

H. FOR PIPE TO TUBING ADAPTERS SEE DRAWING M-050-0002 SHEET 1 OF 2 M SPECIFICATION M031-M-000 FOR THE ADAPTER QUALITY GROUP CLASSIFICATION.

I. COMPONENT SUPPORTS LOCATED BETWEEN THE SYMBOL (I-M NOTE I) AND THE FIRST SEISMIC ANCHOR OR THE END OF THE CONTINUATION PIPING AS APPLICABLE, SHALL BE REPAIRED, REPLACED OR MODIFIED IN ACCORDANCE WITH THE ORIGINAL DESIGN REQUIREMENTS AND MEET THE REQUIREMENTS OF ASME SECTION XI IWA-4000 AND IWA-7000 SHALL APPLY IN ACCORDANCE WITH PECO'S REPAIR AND REPLACEMENT PROGRAM. PRESERVICE/INSERVICE INSPECTIONS ARE NOT REQUIRED. THE REQUIREMENTS OF ASME SECTION XI IWA-4000 AND IWA-7000 SHALL APPLY IN ACCORDANCE WITH PECO'S REPAIR AND REPLACEMENT PROGRAM. REFER TO THE SHOP FABRICATION STRUCTURE DRAWING TO IDENTIFY THE SPECIFIC COMPONENT SUPPORTS.

J. NOT APPLICABLE.

K. NOT APPLICABLE.

L. NOT APPLICABLE.

M. NOT APPLICABLE.

N. REFER TO THE CRL FOR INSERVICE TEST PROGRAM, DESIGN QUALITY INFORMATION IN THE "ASME SECTION XI IST" FIELD.

INFORMATION ONLY

NO	DATE	DESCRIPTION	DRAWN	CHECKED	APPROVED
2	12/92	TRIDENT ECN 94-11326 REV. 0 ADDED NOTE "D" REFERENCING THE CRL FOR IST.			

TABLE OF REVISIONS & CHANGES
USE ONLY RIGHTS BEARING LATEST DATE

MECHANICAL

ASME SECTION XI BOUNDARY PAID
CONTAINMENT ATMOSPHERIC CONTROL
(UNIT 1)

LIMERICK GENERATING STATION
EXELON NUCLEAR CORP.

SCALE	DRAWN	RDS	CHECKED	INSPECTED	APPROVED	DATE
NONE	DIGITAL	DIGITAL	DIGITAL	DIGITAL	RCH	RCH 06-03-02

APPROVED DIGITAL APPROVED

SHEET 2 OF 8031-ISI-M-57 2

ISI-M-57 (SHT. 2)

8031-III-M-57 SH. 3 OF

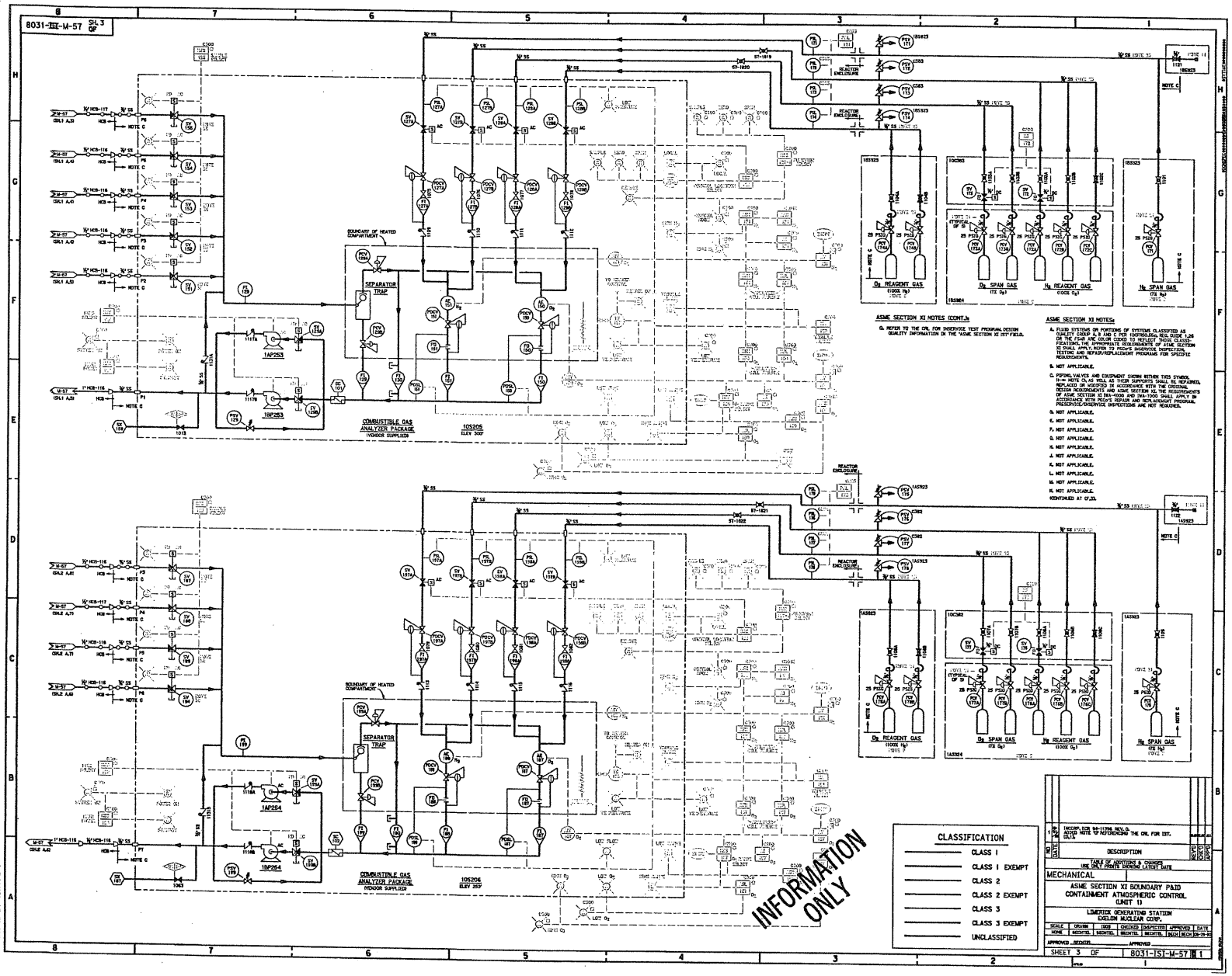

ASME SECTION XI NOTES (CONT.):

G. REFER TO THE CRL FOR INSERVICE TEST PROGRAM DESIGN QUALITY INFORMATION IN THE "ASME SECTION XI IST" FIELD.

ASME SECTION XI NOTES:

A. FLUID SYSTEMS ON PORTIONS OF SYSTEMS CLASSIFIED AS QUALITY GROUP A, B AND C PER CONTROLLED REGULATORY 1.26 OR THE FSAR ARE COLOR CODED TO REFLECT THOSE CLASSIFICATIONS. THE APPROPRIATE REQUIREMENTS OF ASME SECTION XI SHALL APPLY, REFER TO PLANT INSERVICE INSPECTION, TESTING AND REPAIR/REPLACEMENT PROGRAMS FOR SPECIFIC REQUIREMENTS.

B. NOT APPLICABLE.

C. PIPING, VALVES AND EQUIPMENT SHOWN WITHIN THIS SYMBOL ⊢⊣ NOTE C1 AS WELL AS THEIR SUPPORTS SHALL BE REPAIRED, REPLACED OR MODIFIED IN ACCORDANCE WITH THE ORIGINAL DESIGN REQUIREMENTS AND ASME SECTION XI THE REQUIREMENTS OF ASME SECTION III. 1600 AND 2N4-1000 SHALL APPLY IN ACCORDANCE WITH REGULATORY GUIDE 1.26 AND NPR-1 QUALITY PROGRAM. PRESERVICE/INSERVICE INSPECTIONS ARE NOT REQUIRED.

D. NOT APPLICABLE.
E. NOT APPLICABLE.
F. NOT APPLICABLE.
G. NOT APPLICABLE.
H. NOT APPLICABLE.
J. NOT APPLICABLE.
K. NOT APPLICABLE.
L. NOT APPLICABLE.
M. NOT APPLICABLE.
N. NOT APPLICABLE.
CONTINUED AT G7.33.

CLASSIFICATION
CLASS 1
CLASS 1 EXEMPT
CLASS 2
CLASS 2 EXEMPT
CLASS 3
CLASS 3 EXEMPT
UNCLASSIFIED

REV.	DATE	DESCRIPTION	REVIEWED	CHECKED	APPROVED
1		INCORP. ECR 94-11298, REV. 0. ADDED NOTE 'G' REFERENCING THE CRL FOR IST.			

TABLE OF REVISIONS & CHANGES
USE ONLY PRINTS SHOWING LATEST DATE

MECHANICAL

ASME SECTION XI BOUNDARY PAID
CONTAINMENT ATMOSPHERIC CONTROL
(UNIT 1)

LIMERICK GENERATING STATION
EXELON NUCLEAR CORP.

SCALE	DRAWN	DATE	CHECKED	DATE	APPROVED	DATE
NONE	RECHTEL	RECHTEL	RECHTEL	RECHTEL	RECHTEL	MECH 3/29/90

APPROVED RECHTEL APPROVED

SHEET 3 OF 8031-ISI-M-57 1

ISI-M-57 (SHT. 3)

8031-ISI-M-57 SH. 5 OF

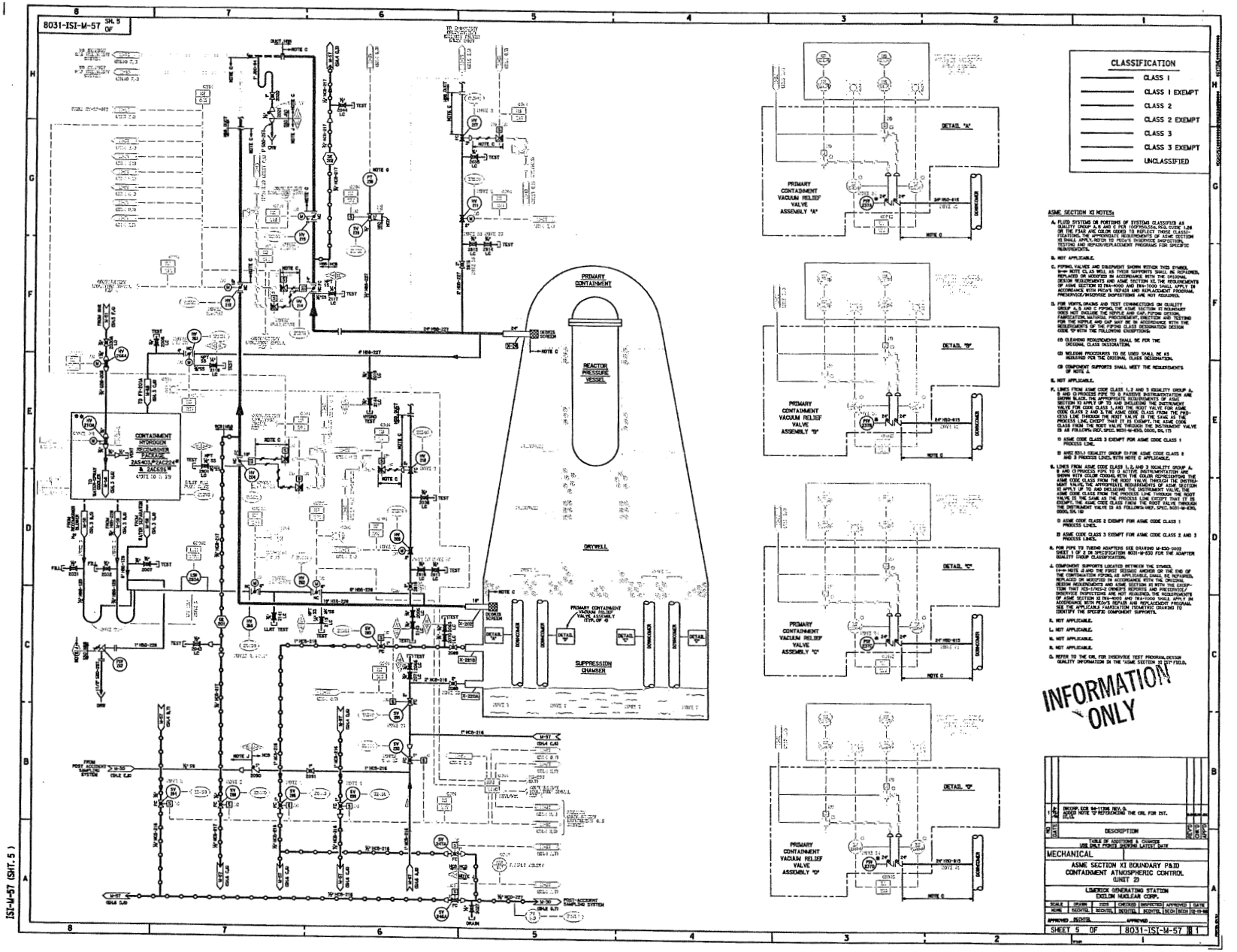

CLASSIFICATION

- CLASS 1
- CLASS 1 EXEMPT
- CLASS 2
- CLASS 2 EXEMPT
- CLASS 3
- CLASS 3 EXEMPT
- UNCLASSIFIED

ASME SECTION XI NOTES:

A. FLUID SYSTEMS OR PORTIONS OF SYSTEMS CLASSIFIED AS QUALITY GROUP A, B AND C PER NORMALDIA-RCA CODE LIN (IN THE FSAR AND COLOR CODED TO REFLECT THOSE CLASSIFICATIONS) ARE ASME SECTION XI BOUNDARY. AS ASME SECTION XI SHALL APPLY, REFER TO PECO'S INSERVICE INSPECTION, TESTING AND REPAIR/REPLACEMENT PROGRAMS FOR SPECIFIC REQUIREMENTS.

B. NOT APPLICABLE.

C. PIPING, VALVES AND EQUIPMENT SHOWN WITHOUT TYPE SYMBOL, ⊢⊣ NOTE C1 AS WELL AS THEIR SUPPORTS SHALL BE REPAIRED, REPLACED OR MODIFIED IN ACCORDANCE WITH THE ORIGINAL DESIGN REQUIREMENTS AND ASME SECTION XI. THE REQUIREMENTS OF ASME SECTION XI IWA-4000 AND IWA-7000 SHALL APPLY IN ACCORDANCE WITH PECO'S REPAIR AND REPLACEMENT PROGRAM. PRESERVICE/INSERVICE INSPECTIONS ARE NOT REQUIRED.

D. FOR VENTS, DRAINS AND TEST CONNECTIONS ON QUALITY GROUP A, B AND C PIPING, THE ASME SECTION XI BOUNDARY DOES NOT INCLUDE THE NOZZLE AND CAP. PIPING DESIGN, FABRICATION, MATERIAL PROCUREMENT, ERECTION AND TESTING FOR THE NOZZLE AND CAP MAY BE IN ACCORDANCE WITH THE REQUIREMENTS OF THE PIPING CLASS DESIGNATION DESIGN CODE "D" WITH THE FOLLOWING EXCEPTIONS:

(1) CLEANING REQUIREMENTS SHALL BE FOR THE ORIGINAL CLASS DESIGNATION.

(2) WELDING PROCEDURES TO BE USED SHALL BE AS REQUIRED FOR THE ORIGINAL CLASS DESIGNATION.

(3) COMPONENT SUPPORTS SHALL MEET THE REQUIREMENTS OF NOTE A.

E. NOT APPLICABLE.

F. LINES FROM ASME CODE CLASS 1, 2 AND 3 QUALITY GROUP A, B AND C PROCESS PIPE TO A NATIVE INSTRUMENTATION AND SHOWN BLACK, THE APPROPRIATE REQUIREMENTS OF ASME SECTION XI APPLY UP TO AND INCLUDING THE INSTRUMENT VALVE FOR CODE CLASS 1, AND THE ROOT VALVE FOR ASME CODE CLASS 2 AND 3. THE ASME CODE CLASS FROM THE PROCESS LINE THROUGH THE ROOT VALVE IS THE SAME AS THE PROCESS LINE, EXCEPT THAT IT IS EXEMPT. THE ASME CODE CLASS FROM THE ROOT VALVE THROUGH THE INSTRUMENT VALVE IS AS FOLLOWS (REF. SPEC. M031-M-K50, GOOD, SH. 17):

(1) ASME CODE CLASS 3 EXEMPT FOR ASME CODE CLASS 1 PROCESS LINE.

(2) ANSI B31.1 QUALITY GROUP D FOR ASME CODE CLASS 2 AND 3 PROCESS LINES WITH NOTE C APPLICABLE.

G. LINES FROM ASME CODE CLASS 1, 2, AND 3 QUALITY GROUP A, B AND C PROCESS PIPE TO A ACTIVE INSTRUMENTATION AND SHOWN WITH COLOR CODDAL WITH THE COLOR REPRESENTING THE ASME CODE CLASS FROM THE ROOT VALVE THROUGH THE INSTRUMENT VALVE. THE APPROPRIATE REQUIREMENTS OF ASME SECTION XI APPLY UP TO AND INCLUDING THE INSTRUMENT VALVE. THE ASME CODE CLASS FROM THE PROCESS LINE THROUGH THE ROOT VALVE IS THE SAME AS THE PROCESS LINE, EXCEPT THAT IT IS EXEMPT. THE ASME CODE CLASS FROM THE ROOT VALVE THROUGH THE INSTRUMENT VALVE IS AS FOLLOWS (REF. SPEC. M031-M-K50, GOOD, SH. 18):

(1) ASME CODE CLASS 2 EXEMPT FOR ASME CODE CLASS 1 PROCESS LINES.

(2) ASME CODE CLASS 3 EXEMPT FOR ASME CODE CLASS 2 AND 3 PROCESS LINES.

H. FOR PIPE TO TUBING ADAPTERS SEE DRAWING M-SCO-0002 SHEET 1 OF 2 OR SPECIFICATION M031-M-E30 FOR THE ADAPTER QUALITY GROUP CLASSIFICATION.

I. COMPONENT SUPPORTS LOCATED BETWEEN THE STARCH, ⊢⊣ NOTE J AND THE FIRST SEISMIC ANCHOR OR THE END OF THE CONTINUATION FORMS AS APPLICABLE, SHALL BE REPAIRED, REPLACED OR MODIFIED IN ACCORDANCE WITH THE ORIGINAL DESIGN REQUIREMENTS AND ASME SECTION XI WITH THE EXCEPTION THAT NCS-1/NCS-2 OWNER'S REPORTS AND PRESERVICE/INSERVICE INSPECTIONS ARE NOT REQUIRED. THE REQUIREMENTS OF ASME SECTION XI IWA-4000 AND IWA-7000 SHALL APPLY IN ACCORDANCE WITH PECO'S REPAIR AND REPLACEMENT PROGRAM. SEE THE APPLICABLE FABRICATION PERMETRIC DRAWING TO IDENTIFY THE SPECIFIC COMPONENT SUPPORTS.

J. NOT APPLICABLE.

L. NOT APPLICABLE.

M. NOT APPLICABLE.

N. NOT APPLICABLE.

O. REFER TO THE CRL FOR INSERVICE TEST PROGRAM/DESIGN QUALITY INFORMATION IN THE "ASME SECTION XI BOUNDARY FIELD.

INFORMATION ONLY

REV	DESCRIPTION	DRAWN	CHK'D	APPR'D
1	PER DESIGN ECR 96-11396 REV. 0, ADDED NOTE "O" REFERENCING THE CRL FOR IST.			
0	INITIAL ISSUE			

TABLE OF ADDITIONS & CHANGES
USE ONLY PRIOR TO REVISING LATEST DATE

MECHANICAL

ASME SECTION XI BOUNDARY PAID
CONTAINMENT ATMOSPHERIC CONTROL
(UNIT 2)

LIMERICK GENERATING STATION
EXELON NUCLEAR CORP.

SCALE	DRAWN	DATE	CHECKED	INSPECTED	APPROVED	DATE
NONE	SCOTTEL	SCOTTEL	SCOTTEL	SCOTTEL	SCOTTEL	12-19-96

APPROVED _____ APPROVED _____

SHEET 5 OF 8031-ISI-M-57 REV 1

ISI-M-57 (SHT. 5)

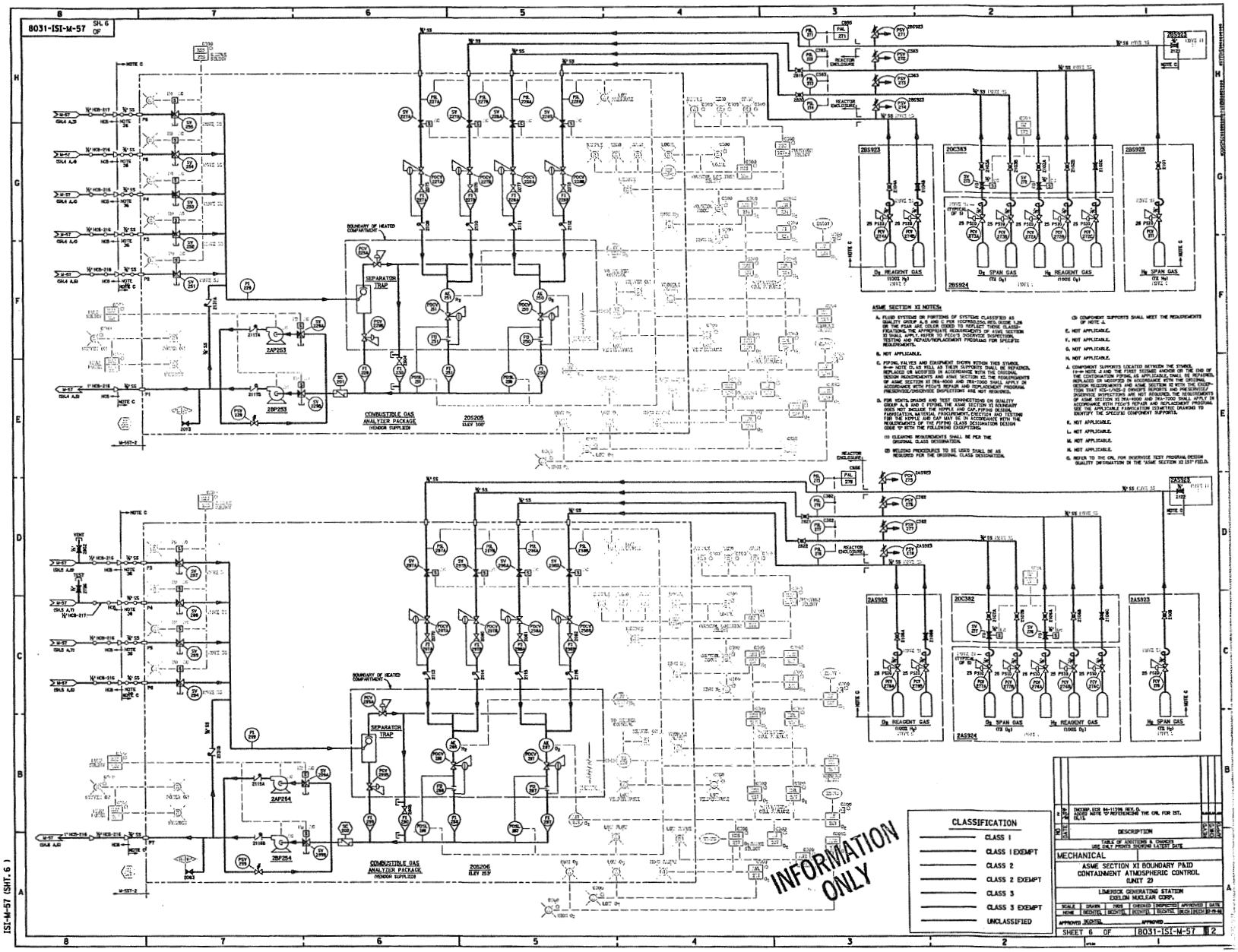
8031-ISI-M-57 SH. 6 OF
SEPARATOR TRAP
COMBUSTIBLE GAS ANALYZER PACKAGE (VENDOR SUPPLIED)
REACTOR ENCLOSURE
O2 REAGENT GAS
O2 SPAN GAS
H2 REAGENT GAS
H2 SPAN GAS
ASME SECTION XI NOTES:
CLASSIFICATION
CLASS 1
CLASS 1 EXEMPT
CLASS 2
CLASS 2 EXEMPT
CLASS 3
CLASS 3 EXEMPT
UNCLASSIFIED
INFORMATION ONLY
MECHANICAL
ASME SECTION XI BOUNDARY PAID
CONTAINMENT ATMOSPHERIC CONTROL
(UNIT 2)
LIMERICK GENERATING STATION
EXELON NUCLEAR CORP.
SHEET 6 OF
8031-ISI-M-57
ISI-M-57 (SHT. 6)

8031-ISI-M-58 SH. 1 OF

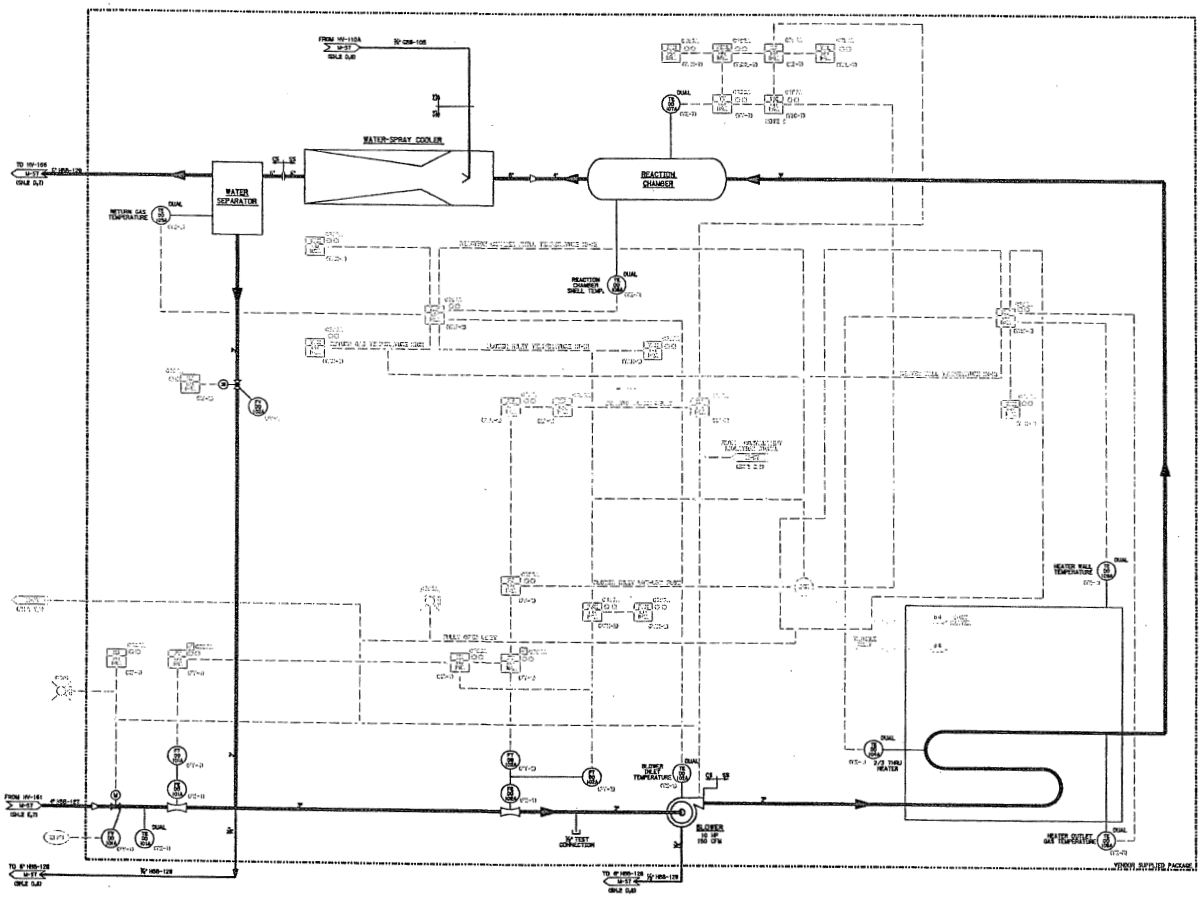

CONTAINMENT HYDROGEN RECOMBINER SKID 1AS403

CLASSIFICATION

- CLASS 1
- CLASS 1 EXEMPT
- CLASS 2
- CLASS 2 EXEMPT
- CLASS 3
- CLASS 3 EXEMPT
- UNCLASSIFIED

ASME SECTION XI NOTES:

A. FLUID SYSTEMS OR PORTIONS OF SYSTEMS CLASSIFIED AS QUALITY GROUP A, B AND C PER ISO/REGULATORY GUIDE 1.26 (REV. 3) AND ASME SECTION III, DIVISION 1 (REV. 1 AND LATER EDITIONS), THE APPROPRIATE REQUIREMENTS OF ASME SECTION XI SHALL APPLY, REFER TO PEDI/3 INSERVICE INSPECTION, TESTING AND REPAIR/REPLACEMENT PROGRAMS FOR SPECIFIC REQUIREMENTS.

B. NOT APPLICABLE.

C. PIPING, VALVES, AND EQUIPMENT SHOWN WITHIN THIS SYMBOL, BUT NOT CLASS WELD OR THEIR SUPPORTS SHALL BE REPAIRED, REPLACED OR MODIFIED IN ACCORDANCE WITH THE ORIGINAL DESIGN REQUIREMENTS AND ASME SECTION XI WITH THE EXCEPTIONS OF ASME SECTION XI IWA-4000 AND IWA-7000 SHALL APPLY IN ACCORDANCE WITH PEDI/3 REPAIR AND REPLACEMENT PROGRAM. PRESERVICE/INSERVICE INSPECTIONS ARE NOT REQUIRED.

D. FOR VENTS, DRAINS AND TEST CONNECTIONS ON QUALITY GROUP A, B AND C PIPING, THE ASME SECTION XI BOUNDARY DOES NOT INCLUDE THE NIPPLE AND CAP. PIPING DESIGN, FABRICATION, MATERIAL, PROCUREMENT, ERECTION AND TESTING FOR THE NIPPLE AND CAP MAY BE IN ACCORDANCE WITH THE REQUIREMENTS OF THE PIPING CLASS DESIGNATION DESIGN CODE "B" WITH THE FOLLOWING EXCEPTIONS:

(1) CLEANING REQUIREMENTS SHALL BE PER THE ORIGINAL CLASS DESIGNATION.

(2) WELDING PROCEDURES TO BE USED SHALL BE AS REQUIRED PER THE ORIGINAL CLASS DESIGNATION.

(3) COMPONENT SUPPORTS SHALL MEET THE REQUIREMENTS OF NOTE A.

E. NOT APPLICABLE.

F. LINES FROM ASME CODE CLASS 1, 2 AND 3 QUALITY GROUP A, B AND C PROCESS PIPE TO D PASSIVE INSTRUMENTATION ARE NOT SUBJECT TO THE REQUIREMENTS OF ASME SECTION XI WHEN THE INSTRUMENT VALVE FOR CODE CLASS 1, AND ONE ROOT VALVE FOR CODE CLASS 2 AND 3 THE ASME CODE CLASS FROM THE PROCESS LINE THROUGH THE ROOT VALVE IS THE SAME AS THE PROCESS LINE, EXCEPT THAT IT IS EXEMPT, THE ASME CODE CLASS FROM THE ROOT VALVE THROUGH THE INSTRUMENT VALVE IS AS FOLLOWS (REF. SPEC. 8031-M-E10, GOOD, DA, 17)

1) ASME CODE CLASS 3 EXEMPT FOR ASME CODE CLASS 1 PROCESS LINE.

2) ANSI B31.1 (QUALITY GROUP D) FOR ASME CODE CLASS 2 AND 3 PROCESS LINES, WITH NOTE C APPLICABLE.

G. LINES FROM ASME CODE CLASS 1, 2, AND 3 QUALITY GROUP A, B AND C PROCESS PIPE TO D ACTIVE INSTRUMENTATION ARE NOT SUBJECT TO THE REQUIREMENTS OF ASME SECTION XI WHEN THE ASME CODE CLASS FROM THE ROOT VALVE OR ISOLATION VALVE TO INSTRUMENT VALVE, THE APPROPRIATE REQUIREMENTS OF ASME SECTION XI APPLY UP TO AND INCLUDING THE INSTRUMENT VALVE, THE ASME CODE CLASS FROM THE PROCESS LINE THROUGH THE ROOT VALVE IS THE SAME AS THE PROCESS LINE EXCEPT THAT IT IS EXEMPT, THE ASME CODE CLASS FROM THE ROOT VALVE THROUGH THE INSTRUMENT VALVE IS AS FOLLOWS (REF. SPEC. 8031-M-E10, GOOD, DA, 19)

1) ASME CODE CLASS 2 EXEMPT FOR ASME CODE CLASS 1 PROCESS LINES.

2) ASME CODE CLASS 3 EXEMPT FOR ASME CODE CLASS 2 AND 3 PROCESS LINES.

H. FOR PIPE TO TUBING ADAPTERS SEE DRAWING M-E50-0002 SHEET 1 AND SPECIFICATION 8031-M-E50 FOR THE ADAPTER QUALITY GROUP CLASSIFICATION.

I. COMPONENT SUPPORTS LOCATED BETWEEN THE SYMBOL (1)-M NOTE J AND THE FIRST SEISMIC ANCHOR OR THE END OF PIPE, WHICHEVER IS FURTHER FROM THE SYMBOL, ARE TO BE REPAIRED, REPLACED OR MODIFIED IN ACCORDANCE WITH THE ORIGINAL DESIGN REQUIREMENTS AND ASME SECTION XI WITH THE EXCEPTION THAT NCA-1-2400-2 OWNER'S REPORTS AND PRESERVICE/INSERVICE INSPECTIONS ARE NOT REQUIRED. THE REQUIREMENTS OF ASME SECTION XI IWA-4000 AND IWA-7000 SHALL APPLY IN ACCORDANCE WITH PEDI/3 REPAIR AND REPLACEMENT PROGRAM. REFERENCE ASME SECTION XI SUBSUBSUBS

8031-ISI-M-58 SH. 2 OF

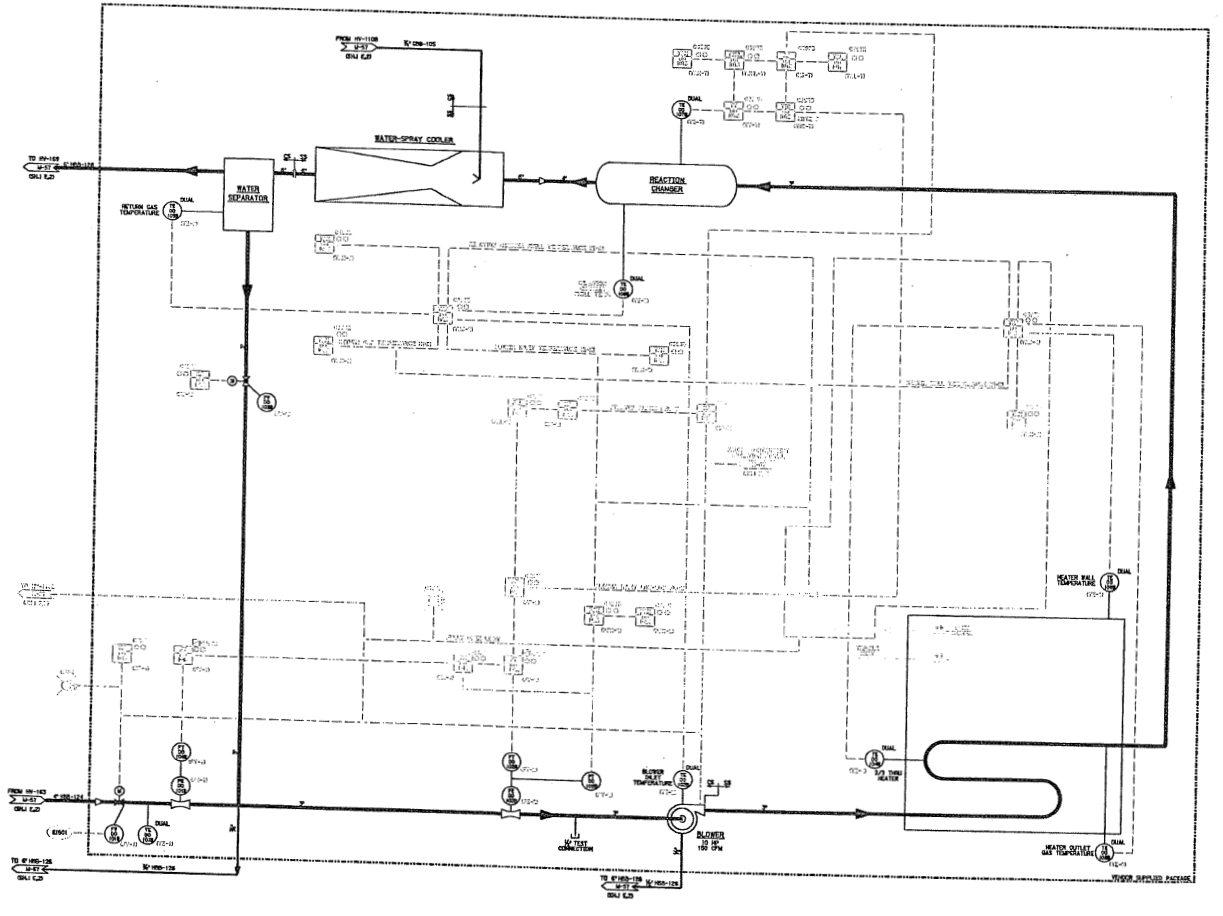

CONTAINMENT HYDROGEN RECOMBINER SKID 1BS403

CLASSIFICATION

- CLASS 1
- CLASS 1 EXEMPT
- CLASS 2
- CLASS 2 EXEMPT
- CLASS 3
- CLASS 3 EXEMPT
- UNCLASSIFIED

ASME SECTION XI NOTES:

A. FLUID SYSTEMS OR PORTIONS OF SYSTEMS CLASSIFIED AS QUALITY GROUP A, B AND C PER (GENERAL NOTE CODE L24 ON THE FSAR AND COLOR CODED TO NUCLEAR PIPING DESIGN DRAWINGS) THE APPROPRIATE REQUIREMENTS OF ASME SECTION XI SHALL APPLY. REFER TO PECO'S INSERVICE INSPECTION, TEST, REPAIR/REPLACEMENT PROGRAMS FOR SPECIFIC REQUIREMENTS.

B. NOT APPLICABLE.

C. PIPING, VALVES AND EQUIPMENT SHOWN WITHIN THIS SYMBOL ⊕ NOTE CLASS 2(3) IS THEIR SUPPORTS SHALL BE REPAIRED, REPLACED OR MODIFIED IN ACCORDANCE WITH THE ORIGINAL DESIGN REQUIREMENTS AND ASME SECTION XI. THE REQUIREMENTS OF ASME SECTION XI IWA-4000 AND IWA-7000 SHALL APPLY IN ACCORDANCE WITH PECO'S REPAIR AND REPLACEMENT PROGRAM. PRESERVICE/INSERVICE INSPECTIONS ARE NOT REQUIRED.

D. FOR PIPING, VALVES AND TEST CONNECTIONS ON QUALITY GROUP A, B AND C PORTIONS THE ASME SECTION XI SUBSTANTIALLY DOES NOT ANALYZE THE SIMPLE AND CAP-TYPE DESIGN, FABRICATION, MATERIAL PROCUREMENT, ERECTION AND TESTING REQUIREMENTS. THEY CAN ONLY BE IN ACCORDANCE WITH THE REQUIREMENTS OF THE ORIGINAL CLASS DESIGNATION DESIGN CODE "D" WITH THE FOLLOWING EXCEPTIONS:

(1) CLEANING REQUIREMENTS SHALL BE FOR THE ORIGINAL CLASS DESIGNATION.

(2) WELDING PROCEDURES TO BE USED SHALL BE AS REQUIRED FOR THE ORIGINAL CLASS DESIGNATION.

(3) COMPONENT SUPPORTS SHALL MEET THE REQUIREMENTS OF NOTE L.

E. NOT APPLICABLE.

F. LINES FROM ASME CODE CLASS 1, 2 AND 3 (QUALITY GROUP A, B AND C) PROCESS FOR (3-2) PRESSURE INSTRUMENTATION ARE SHOWN BLACK. THE APPROPRIATE REQUIREMENTS OF ASME SECTION XI (1-2-3) ARE OF TO AND INCLUDING THE ISOLATION VALVE FOR CODE CLASS 1, AND THE ROOT VALVE FOR ASME CODE CLASS 2 AND 3. THE ASME CODE CLASS FROM THE PROCESS LINE THROUGH THE ROOT VALVE IS THE SAME AS THE PROCESS LINE. THE ASME CODE CLASS FROM THE ROOT VALVE TO THE CLASS FROM THE ROOT VALVE TO THE INSTRUMENT VALVE IS AS FOLLOWS: (REF. SPEC. 8031-M-836, (GOAL SA, 17)

(1) ASME CODE CLASS 3 EXEMPT FOR ASME CODE CLASS 1 PROCESS LINE.

(2) APPZ 8031-1 (QUALITY GROUP D) FOR ASME CODE CLASS 2 AND 3 PROCESS LINES WITH NOTE A APPLICABLE.

G. LINES FROM ASME CODE CLASS 1, 2 AND 3 (QUALITY GROUP A, B AND C) PROCESS FOR (3-2) ACTIVE INSTRUMENTATION ARE SHOWN WITH COLOR CODING. THE APPROPRIATE REQUIREMENTS OF ASME CODE CLASS FROM THE ROOT VALVE THROUGH THE INSTRUMENT VALVE. THE APPROPRIATE REQUIREMENTS OF ASME SECTION XI (1-2-3) ARE OF TO AND INCLUDING THE INSTRUMENT VALVE. THE ASME CODE CLASS FROM THE PROCESS LINE THROUGH THE ROOT VALVE IS THE SAME AS THE PROCESS LINE. THE ASME CODE CLASS FROM THE ROOT VALVE TO THE INSTRUMENT VALVE IS AS FOLLOWS: (REF. SPEC. 8031-M-836, (GOAL SA, 18)

(1) ASME CODE CLASS 2 EXEMPT FOR ASME CODE CLASS 1 PROCESS LINES.

(2) ASME CODE CLASS 3 EXEMPT FOR ASME CODE CLASS 2 AND 3 PROCESS LINES.

H. FOR PIPE TO TUBING ADAPTERS SEE DRAWING M-050-0003 SHEET 1 OF 2 IN SPECIFICATION 8031-M-836 FOR THE ADAPTER QUALITY GROUP CLASSIFICATION.

I. COMPONENT SUPPORTS LOCATED WITHIN THE SYMBOL ⊕ NOTE 2 AND THE FIRST DEFINED ANCHOR OR THE END OF CONTINUATION PERIODIC SUPPORTS DEFINED ANCHOR SHALL BE REPAIRED, REPLACED OR MODIFIED IN ACCORDANCE WITH THE ORIGINAL DESIGN REQUIREMENTS AND ASME SECTION XI WITH THE EXCEPTION THAT NDE-1/NDE-2 OWNER'S REPORTS AND PRESERVICE/INSERVICE INSPECTIONS ARE NOT REQUIRED. THE REQUIREMENTS OF ASME SECTION XI IWA-4000 AND IWA-7000 SHALL APPLY IN ACCORDANCE WITH PECO'S REPAIR AND REPLACEMENT PROGRAM. SEE THE APPLICABLE FABRICATION DRAWING/REPORT, DRAWING TO IDENTIFY THE SPECIFIC COMPONENT SUPPORTS.

K. NOT APPLICABLE.

L. NOT APPLICABLE.

M. NOT APPLICABLE.

N. NOT APPLICABLE.

O. REFER TO THE CRL FOR INSERVICE TEST PROGRAM/DESIGN QUALITY INFORMATION IN THE "ASME SECTION XI ISTP FIELD.

INFORMATION ONLY

REV.	DATE	DESCRIPTION	DRAWN	CHECKED	APPROVED
1		DCCOUP. ECR 94-11298 REV. 0 REVISED NOTE "D" AND REMOVE THE CRL FOR IST. CLTS.			

TABLE OF LOCATIONS & CHANGES
USE ONLY POINTS SHOWING LATEST DATE

MECHANICAL

ASME SECTION XI BOUNDARY PAID
CONTAINMENT HYDROGEN RECOMBINER "B"
(UNIT 1)

LIMERICK GENERATING STATION
EXELON NUCLEAR CORP.

SCALE	DRAWN	CODE	CHECKED	INSPECTED	APPROVED	DATE
NONE	JAN	JAN	DW		MJ	09/19/96

APPROVED SUBJECT TO NUMBER APPROVED

SHEET 2 OF 8031-ISI-M-58 REV 1

ISI-M-58 (SHT. 2)

8031-ISI-M-58 SH. 3 OF

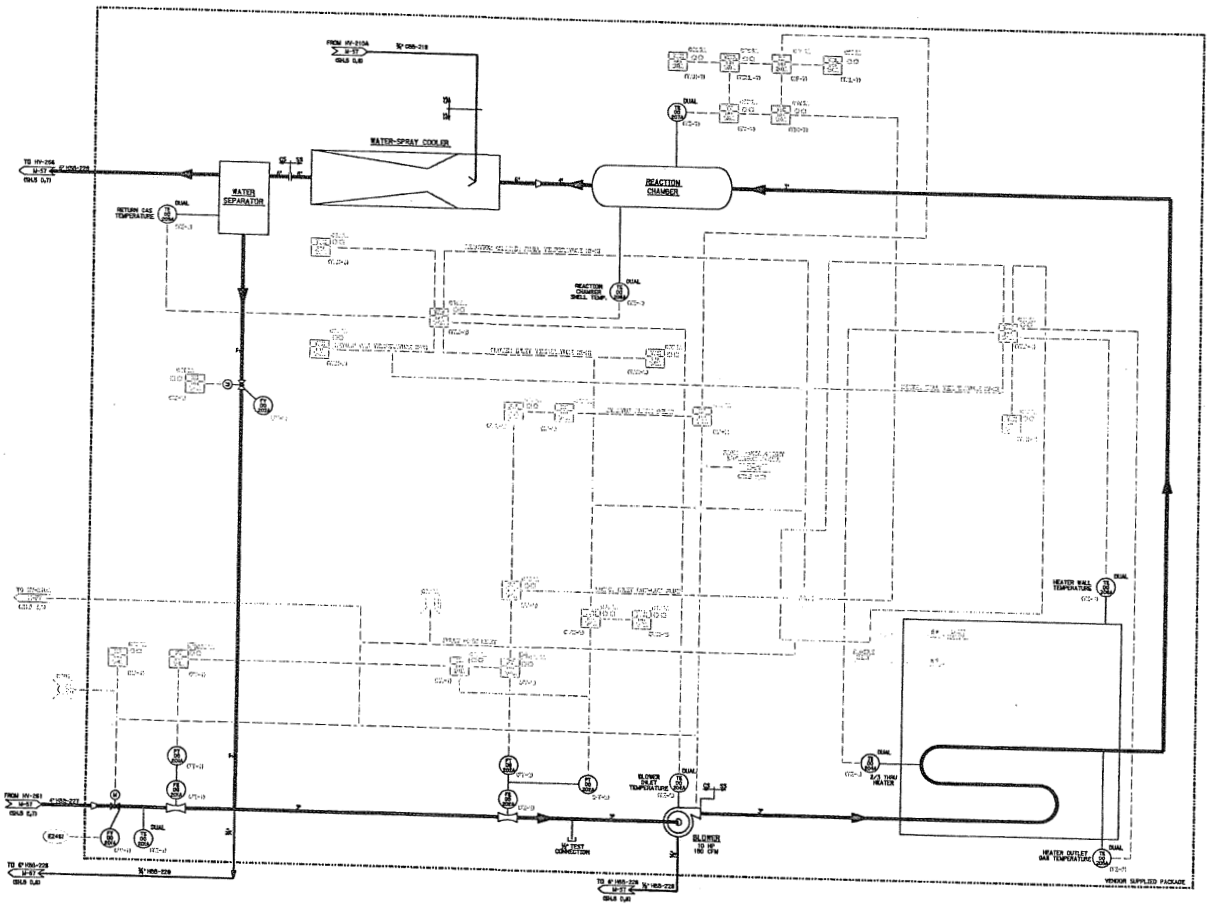

CONTAINMENT HYDROGEN RECOMBINER SKID 2AS403

CLASSIFICATION
CLASS 1
CLASS 1 EXEMPT
CLASS 2
CLASS 2 EXEMPT
CLASS 3
CLASS 3 EXEMPT
UNCLASSIFIED

ASME SECTION XI NOTES:

A. PIPING SYSTEMS OR PORTIONS OF SYSTEMS CLASSIFIED AS QUALITY GROUP A,B AND C PER DESIGNATED ASME CODE LINE OR THE FEAR ARE COLOR CODED TO REFLECT THOSE CLASSIFICATIONS. THEY SHALL MEET APPROPRIATE REQUIREMENTS OF ASME SECTION XI WITH RESPECT TO PSI/ISI INSERVICE INSPECTION, TESTING AND REPAIR/REPLACEMENT PROGRAMS FOR SPECIFIC REQUIREMENTS.

B. NOT APPLICABLE.

C. PIPING, VALVES AND COMPONENT SHOWN WITHIN THIS STYLE ←→ NOTE C.1.3 WELL AS THEIR SUPPORTS SHALL BE REPAIRED, REPLACED OR MODIFIED IN ACCORDANCE WITH THE ORIGINAL DESIGN REQUIREMENTS AND ASME SECTION III, THE REQUIREMENTS OF ASME SECTION III IWA-4000 AND IWA-7000 SHALL APPLY IN ACCORDANCE WITH PECO'S REPAIR AND REPLACEMENT PROGRAM. PRESERVICE/INSERVICE INSPECTIONS ARE NOT REQUIRED.

D. FOR VENT, DRAIN AND TEST CONNECTIONS ON QUALITY GROUP A, B AND C PIPING, THE ASME SECTION III BOUNDARY ISOLATION VALVE SHALL BE DESIGNED, FABRICATION DESIGN, FABRICATION/MATERIAL PROCUREMENT, INSPECTION AND TESTING FOR THE NIPPLE AND CAP MAY BE IN ACCORDANCE WITH REQUIREMENTS OF THE PIPING CLASS DESIGNATION DESIGN CODE 'D' WITH THE FOLLOWING EXCEPTIONS:

(1) CLEANING REQUIREMENTS SHALL BE PER THE ORIGINAL CLASS DESIGNATION.

(2) WELDING PROCEDURES TO BE USED SHALL BE AS REQUIRED PER THE ORIGINAL CLASS DESIGNATION.

(3) COMPONENT SUPPORTS SHALL MEET THE REQUIREMENTS OF NOTE A.

E. NOT APPLICABLE.

F. LINES FROM ASME CODE CLASS 1,2 AND 3 QUALITY GROUP A, B AND C(PROCESS PIPE TO 3 PASSIVE INSTRUMENTATION ARE SHOWN BLACK. THE APPROPRIATE REQUIREMENTS OF ASME SECTION XI APPLY UP TO AND INCLUDING THE INSTRUMENT VALVE FOR CODE CLASS 1, AND THE ROOT VALVE FOR ASME CODE CLASS 2 AND 3 PROCESS LINES. THE ASME CODE CLASS FOR PROCESS LINE THROUGH THE ROOT VALVE IS THE SAME AS THE PROCESS LINE, EXCEPT THAT IF IS EXEMPT THE ASME CODE CLASS FROM THE ROOT VALVE THROUGH THE INSTRUMENT VALVE IS AS FOLLOWS:(REF. SPEC. 8031-M-630, GOOD, SH. 13)

(1) ASME CODE CLASS 3 EXEMPT FOR ASME CODE CLASS 1 PROCESS LINE.

(2) ANSI B31.1 QUALITY GROUP D(FOR ASME CODE CLASS 2 AND 3 PROCESS LINES, WITH NOTE C APPLICABLE.

G. LINES FROM ASME CODE CLASS 1,2,AND 3 QUALITY GROUP A, B AND C(PROCESS PIPE TO 3 ACTIVE INSTRUMENTATION ARE SHOWN WITH COLOR CODING WITH THE COLOR REPRESENTING THE ASME CODE CLASS FROM THE ROOT VALVE THROUGH THE INSTRUMENT VALVE. THE APPROPRIATE REQUIREMENTS OF ASME SECTION XI APPLY UP TO AND INCLUDING THE INSTRUMENT VALVE FOR ASME CODE CLASS FROM THE PROCESS LINE THROUGH THE ROOT VALVE IS THE SAME AS THE PROCESS LINE EXCEPT THAT IT IS EXEMPT. THE ASME CODE CLASS FROM THE ROOT VALVE THROUGH THE INSTRUMENT VALVE IS AS FOLLOWS:(REF. SPEC. 8031-M-630, GOOD, SH. 13)

(1) ASME CODE CLASS 2 EXEMPT FOR ASME CODE CLASS 1 PROCESS LINES.

(2) ASME CODE CLASS 3 EXEMPT FOR ASME CODE CLASS 2 AND 3 PROCESS LINES.

H. FOR PIPE TO TUBING ADAPTERS SEE DRAWING M-630-0002 SHEET 1 OF 3 IN SPECIFICATION 8031-M-630 FOR THE ADAPTER QUALITY GROUP CLASSIFICATION.

J. COMPONENT SUPPORTS LOCATED BETWEEN THE STARTS ←→ NOTE J AND THE FIRST MEDIAN ANCHOR OR THE END OF THE CONTAMINATION PIPING,AS APPLICABLE,SHALL BE REPAIRED, REPLACED OR MODIFIED IN ACCORDANCE WITH THE ORIGINAL DESIGN REQUIREMENTS AND ASME SECTION III WITH THE EXCEPTION THAT THE ASME SECTION III BOUNDARY ISOLATION VALVE. INSERVICE INSPECTIONS ARE NOT REQUIRED. THE PRESERVICE REQUIREMENTS OF ASME SECTION XI IWA-4000 AND IWA-7000 SHALL APPLY IN ACCORDANCE WITH PECO'S REPAIR AND REPLACEMENT PROGRAM. SEE THE APPLICABLE FABRICATION ISOMETRIC DRAWING TO IDENTIFY THE SPECIFIC COMPONENT SUPPORTS.

K. NOT APPLICABLE.

L. NOT APPLICABLE.

M. NOT APPLICABLE.

N. NOT APPLICABLE.

O. REFER TO THE CRL FOR INSERVICE TEST PROGRAM,DESIGN QUALITY INFORMATION IN THE 'ASME SECTION XI ISTI' FIELD.

INFORMATION ONLY

NO	DATE	DESCRIPTION	DRAWN	CHECKED
1		DESIGN CCN 94-11786 REV.0. ADDED NOTE 'O' REFERENCING THE CRL FOR IST. DATA.		

TABLE OF ADDITIONS & CHANGES
USE ONLY PRINTS SHOWING LATEST DATE

MECHANICAL

ASME SECTION XI BOUNDARY P&ID
CONTAINMENT HYDROGEN RECOMBINER "A"
(UNIT 2)

LIMERICK GENERATING STATION
EXELON NUCLEAR CORP.

SCALE	DRAWN	DES	CHECKED	INSPECTED	APPROVED	DATE
NONE	JAN	JAN	DRF		MRJ	03/18/03

APPROVED MANAGER FOR SUBJECT APPROVED

SHEET 3 OF 8031-ISI-M-58 R1

ISI-M-58 (SHT. 3)

8031-ISI-M-58 SH. 4 OF

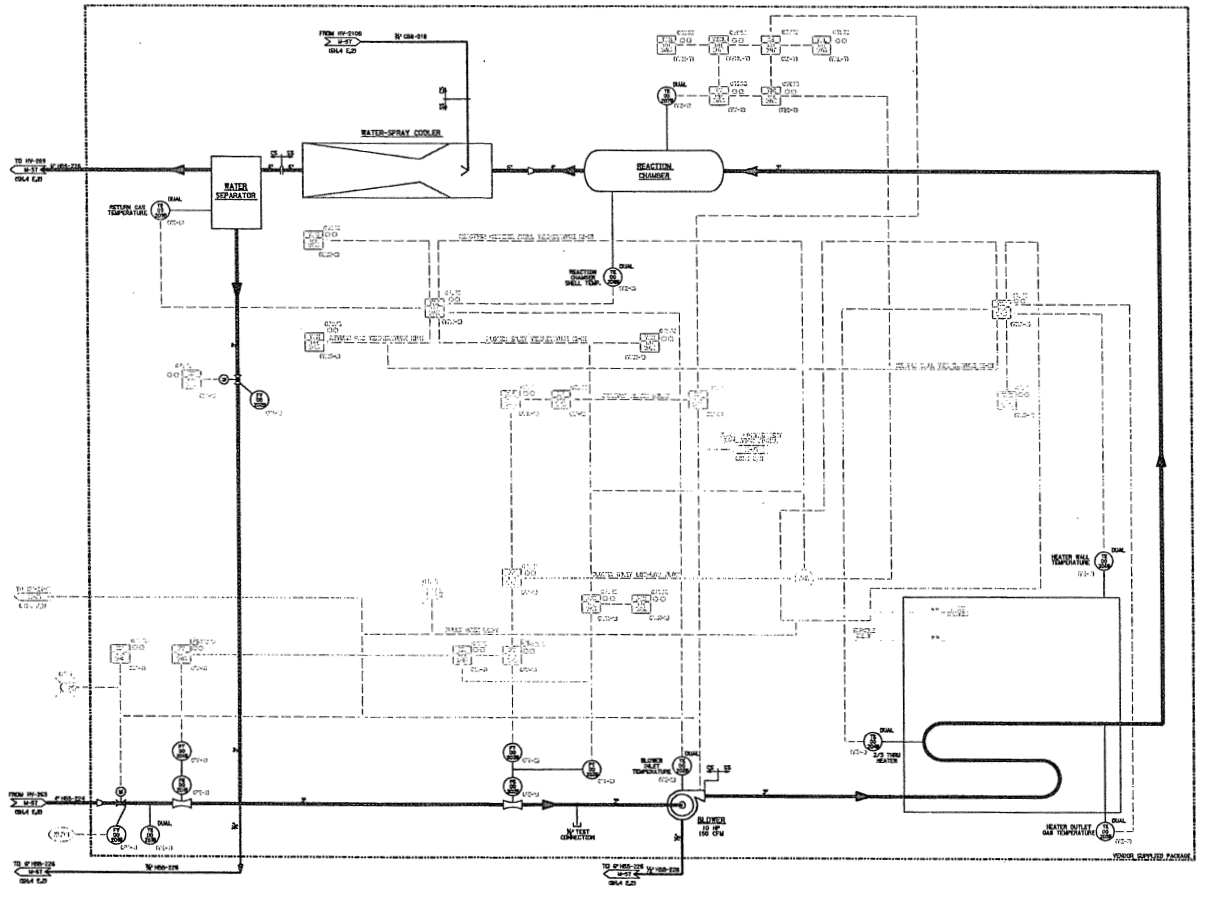

CONTAINMENT HYDROGEN RECOMBINER SKID 2815403

CLASSIFICATION

- CLASS 1
- CLASS 1 EXEMPT
- CLASS 2
- CLASS 2 EXEMPT
- CLASS 3
- CLASS 3 EXEMPT
- UNCLASSIFIED

ASME SECTION XI NOTES:

A. FLUID SYSTEMS OR PORTIONS OF SYSTEMS CLASSIFIED AS QUALITY GROUP A, B AND C PER REGULATORY GUIDE 1.26 OR THE FSAR ARE COLOR CODED TO REFLECT THOSE CLASSIFICATIONS. THE APPROPRIATE REQUIREMENTS OF ASME SECTION XI SHALL APPLY. REFER TO PECO'S INSERVICE INSPECTION, TESTING AND REPAIR/REPLACEMENT PROGRAMS FOR SPECIFIC REQUIREMENTS.

B. NOT APPLICABLE.

C. PIPING, VALVES AND EQUIPMENT SHOWN BEYOND THIS STAMPED ON THIS CLASS WELD OR THEIR SUPPORTS SHALL BE REPAIRED, REPLACED OR MODIFIED IN ACCORDANCE WITH THE ORIGINAL DESIGN REQUIREMENTS AND ASME SECTION XI. THE REQUIREMENTS OF ASME SECTION XI IWA-4000 AND IWA-7000 SHALL APPLY IN ACCORDANCE WITH PECO'S REPAIR AND REPLACEMENT PROGRAM. PRESERVICE/INSERVICE INSPECTIONS ARE NOT REQUIRED.

D. FOR VENTS, DRAINS AND TEST CONNECTIONS ON QUALITY GROUP A, B AND C PIPING, THE ASME SECTION XI BOUNDARY DOES NOT INCLUDE THE NOZZLE AND CAP. FOR DESIGN, FABRICATION, MATERIAL PROCUREMENT, INSPECTION AND TESTING FOR THE NOZZLE AND CAP MAY BE IN ACCORDANCE WITH THE REQUIREMENTS OF THE PIPING SYSTEM DESIGNATION DESIGN CODE "D" WITH THE FOLLOWING EXCEPTIONS:

(1) CLEANING REQUIREMENTS SHALL BE FOR THE ORIGINAL CLASS DESIGNATION.

(2) WELDING PROCEDURES TO BE USED SHALL BE AS REQUIRED FOR THE ORIGINAL CLASS DESIGNATION.

(3) COMPONENT SUPPORTS SHALL MEET THE REQUIREMENTS OF NOTE A.

E. NOT APPLICABLE.

F. LINES FROM ASME CODE CLASS 1, 2 AND 3 QUALITY GROUP A, B AND C PROCESS PIPE TO A NUCLEAR INSTRUMENTATION ARE SHOWN BLACK. THE APPROPRIATE REQUIREMENTS OF ASME SECTION XI APPLY UP TO AND INCLUDING THE INSTRUMENT VALVE FOR CODE CLASS 1, AND THE ROOT VALVE FOR ASME CODE CLASS 2 AND 3. THE ASME CODE CLASS FROM THE PROCESS LINE THROUGH THE ROOT VALVE IS THE SAME AS THE PROCESS LINE. THE ASME CODE CLASS FROM THE ROOT VALVE CLASS FROM THE ROOT VALVE THROUGH THE INSTRUMENT VALVE IS AS FOLLOWS: REF. SPEC. 8031-M-630, GOOD, SH. 13

(1) ASME CODE CLASS 3 EXEMPT FOR ASME CODE CLASS 1 PROCESS LINE.

(2) ANSI B31.1 QUALITY GROUP D FOR ASME CODE CLASS 2 AND 3 PROCESS LINES, WITH NOTE C APPLICABLE.

G. LINES FROM ASME CODE CLASS 1, 2, AND 3 QUALITY GROUP A, B AND C PROCESS PIPE TO A NUCLEAR INSTRUMENTATION ARE SHOWN WITH COLOR CODING WITH THE COLOR REPRESENTING THE ASME CODE CLASS FROM THE ROOT VALVE THROUGH THE INSTRUMENT VALVE. THE APPROPRIATE REQUIREMENTS OF ASME SECTION XI APPLY UP TO AND INCLUDING THE INSTRUMENT VALVE. THE ASME CODE CLASS FROM THE PROCESS LINE THROUGH THE ROOT VALVE IS THE SAME AS THE PROCESS LINE. THE ASME CODE CLASS EXEMPT. THE ASME CODE CLASS FROM THE ROOT VALVE THROUGH THE INSTRUMENT VALVE IS AS FOLLOWS: REF. SPEC. 8031-M-630, GOOD, SH. 16

(1) ASME CODE CLASS 3 EXEMPT FOR ASME CODE CLASS 1 PROCESS LINES.

(2) ASME CODE CLASS 3 EXEMPT FOR ASME CODE CLASS 2 AND 3 PROCESS LINES.

H. FOR STUB TO TUBING ADAPTERS SEE DRAWING M-630-0002 SHEET 1 OF 2 IN SPECIFICATION 8031-M-630 FOR THE ADAPTER QUALITY GROUP CLASSIFICATION.

I. COMPONENT SUPPORTS LOCATED BETWEEN THE STAMPED (NOTE A) AND THE FIRST SEISMIC ANCHOR OR THE END OF THE CONTINUATION PIPING AS APPLICABLE SHALL BE REPAIRED, REPLACED OR MODIFIED IN ACCORDANCE WITH THE ORIGINAL DESIGN REQUIREMENTS AND ASME SECTION XI WITH THE EXCEPTION THAT IWX-1-1400-2 OWNER'S REPORTS AND PRESERVICE/INSERVICE INSPECTIONS ARE NOT REQUIRED. THE REQUIREMENTS OF ASME SECTION XI IWA-4000 AND IWA-7000 SHALL APPLY IN ACCORDANCE WITH PECO'S REPAIR AND REPLACEMENT PROGRAM. SEE THE APPLICABLE FABRICATION ISOMETRIC DRAWING TO IDENTIFY THE SPECIFIC COMPONENT SUPPORTS.

J. NOT APPLICABLE.

K. NOT APPLICABLE.

L. NOT APPLICABLE.

M. NOT APPLICABLE.

N. REFER TO THE CPL FOR INSERVICE TEST PROGRAM. DESIGN QUALITY INFORMATION IN THE "ASME SECTION XI IST" FIELD.

INFORMATION ONLY

NO.	DATE	DESCRIPTION	REVISED BY	CHECKED BY	APPROVED BY
1	9/96	INCORP. ECR 96-11098 REV. 0. ADDED NOTE "O" REFERENCING THE CPL FOR IST. DATA.			

TABLE OF ADDITIONS & CHANGES
USE ONLY PRINTS SHOWING LATEST DATE

MECHANICAL

ASME SECTION XI BOUNDARY P&ID
CONTAINMENT HYDROGEN RECOMBINER "B"
(UNIT 2)

LIMERICK GENERATING STATION
EXELON NUCLEAR CORP.

SCALE	DRAWN	DATE	CHECKED	INSPECTED	APPROVED	DATE
NONE	JVN	JVN	DRF		MJ	10/11/96

APPROVED U.S. NUTRON FOR AA, NRTE, UPHOND

SHEET 4 OF | 8031-ISI-M-58 | 1

ISI-M-58 (SHT. 4)

8031-ISI-M-55 SH. 1 OF

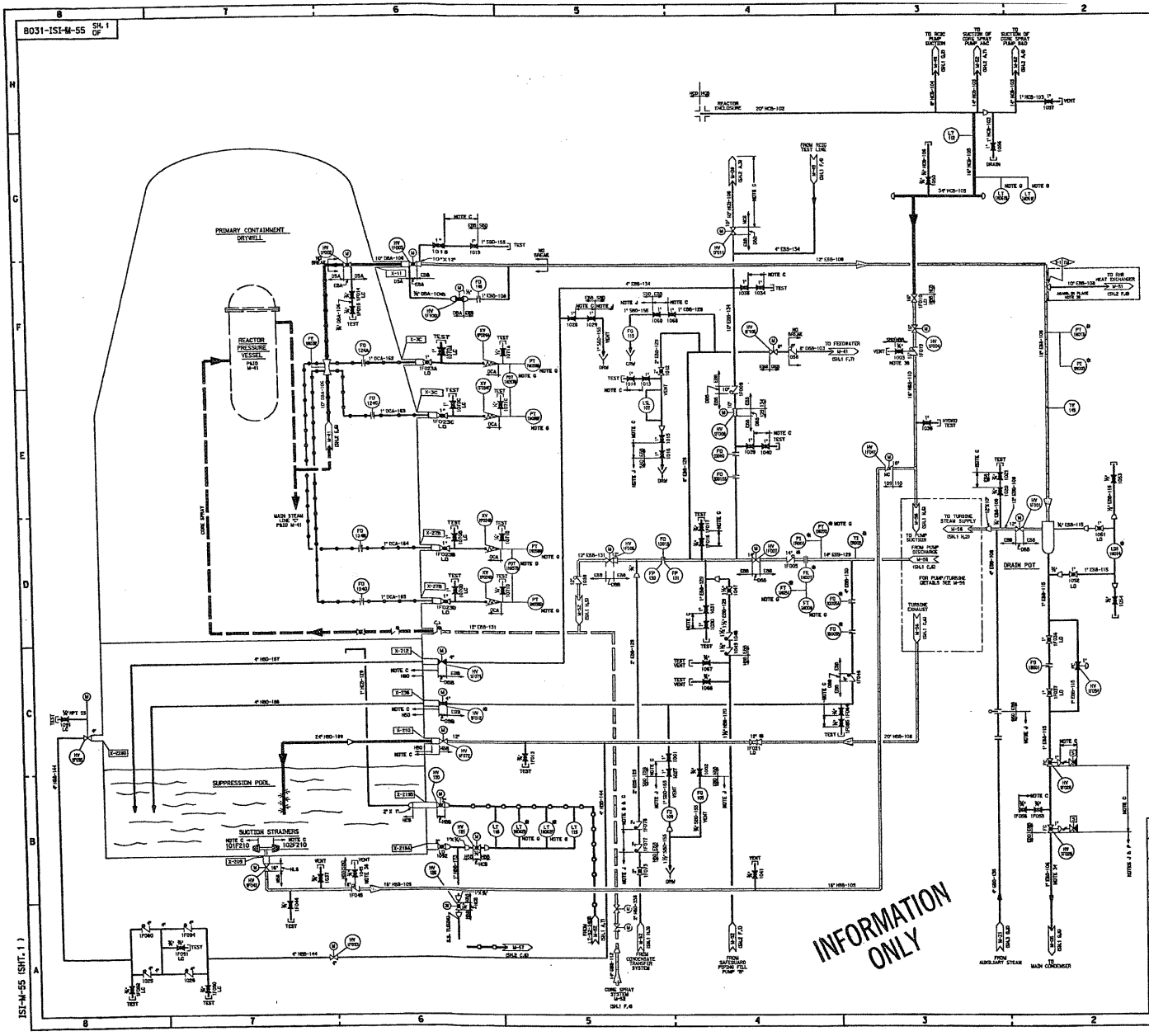

CLASSIFICATION

- CLASS 1
- CLASS 1 EXEMPT
- CLASS 2
- CLASS 2 EXEMPT
- CLASS 3
- CLASS 3 EXEMPT
- UNCLASSIFIED

ASME SECTION XI NOTES:

A. FLUID SYSTEMS OR PORTIONS OF SYSTEMS CLASSIFIED AS QUALITY GROUP A, B AND C PER 10CFR50.55a, REG. GUIDE 1.26 OR THE FSAR ARE COLOR CODED TO REFLECT THESE CLASSIFICATIONS. THE APPROPRIATE REQUIREMENTS OF ASME SECTION XI SHALL APPLY. REFER TO PSEG'S INSERVICE INSPECTION, TESTING AND REPAIR/REPLACEMENT PROGRAMS FOR SPECIFIC REQUIREMENTS.

B. NOT APPLICABLE.

C. PIPING, VALVES AND EQUIPMENT SHOWN WITHIN THIS SYMBOL ⊢—⊣ NOTE C, AS WELL AS THEIR SUPPORTS SHALL BE REPAIRED, REPLACED OR MODIFIED IN ACCORDANCE WITH THE ORIGINAL DESIGN REQUIREMENTS AND ASME SECTION XI, THE REQUIREMENTS OF ASME SECTION III NB-4000 AND NB-7000 SHALL APPLY OR IN ACCORDANCE WITH PSEG'S REPAIR AND REPLACEMENT PROGRAM. PRESERVICE/INSERVICE INSPECTIONS ARE NOT REQUIRED.

D. FOR VENTS, DRAINS AND TEST CONNECTIONS ON QUALITY GROUP A, B AND C PIPING, THE ASME SECTION XI BOUNDARY GOES NOT INCLUDE THE NEEDLE AND CAP. PIPING DESIGN, FABRICATION, INSPECTION AND TESTING BEYOND THE SECTION FOR THE NEEDLE AND CAP MAY BE IN ACCORDANCE WITH THE REQUIREMENTS OF THE PIPING CLASS DESIGNATION DESIGN CODE "B" WITH THE FOLLOWING EXCEPTIONS:

(1) CLEANING REQUIREMENTS SHALL BE PER THE ORIGINAL CLASS DESIGNATION.

(2) WELDING PROCEDURES TO BE USED SHALL BE AS REQUIRED PER THE ORIGINAL CLASS DESIGNATION.

(3) COMPONENT SUPPORTS SHALL MEET THE REQUIREMENTS OF NOTE J.

E. FOR Q ACTIVE/Q PASSIVE INSTRUMENTATION ATTACHED TO THE PROCESS PIPE, (A,B,C) ONLY THE PRESSURE RETAINING WELDS AND COMPONENTS ARE WITHIN THE ASME SECTION XI BOUNDARY. THE QUALITY GROUP CLASSIFICATION OF THE CODE CLASS OF THE HALF COUPLING AND WELDS IS THE SAME AS THE PROCESS PIPE, EXCEPT THAT IT IS EXEMPT. SEE NOTES F, G AND H FOR INSTRUMENTATION WITH ROOT VALVES.

F. LINES FROM ASME CODE CLASS 1, 2 AND 3 QUALITY GROUP A, B AND C PROCESS PIPE TO Q PASSIVE INSTRUMENTATION ARE SHOWN BLACK. THE APPROPRIATE REQUIREMENTS OF ASME SECTION XI APPLY UP TO AND INCLUDING THE INSTRUMENT VALVE FOR CODE CLASS 1, AND THE ROOT VALVE FOR ASME CODE CLASS 2 AND 3. THE ASME CODE CLASS FROM THE PROCESS LINE THROUGH THE ROOT VALVE IS THE SAME AS THE PROCESS LINE, EXCEPT THAT IT IS EXEMPT. THE ASME CODE CLASS FROM THE ROOT VALVE THROUGH THE INSTRUMENT VALVE IS AS FOLLOWS: REF. SPEC. 8031-M-630, GOOD, SH. 17)

(1) ASME CODE CLASS 3 EXEMPT FOR ASME CODE CLASS 1 PROCESS LINE.

(2) ANSI B31.1 (QUALITY GROUP D) FOR ASME CODE CLASS 2 AND 3 PROCESS LINES, WITH NOTE C APPLICABLE.

G. LINES FROM ASME CODE CLASS 1, 2, AND 3 (QUALITY GROUP A, B AND C) PROCESS PIPE TO Q ACTIVE INSTRUMENTATION ARE SHOWN WITH COLOR CODING, WITH THE COLOR REPRESENTING THE ASME CODE CLASS OF THE PROCESS PIPE. THE APPROPRIATE REQUIREMENTS OF ASME SECTION XI APPLY UP TO AND INCLUDING THE INSTRUMENT VALVE FOR ASME CODE CLASS FROM THE PROCESS LINE THROUGH THE ROOT VALVE IS THE SAME AS THE PROCESS LINE EXCEPT THAT IT IS EXEMPT. THE ASME CODE CLASS FROM THE ROOT VALVE THROUGH THE INSTRUMENT VALVE IS AS FOLLOWS: REF. SPEC. 8031-M-630, GOOD, SH. 17)

(1) ASME CODE CLASS 2 EXEMPT FOR ASME CODE CLASS 1 PROCESS LINES.

(2) ASME CODE CLASS 3 EXEMPT FOR ASME CODE CLASS 2 AND 3 PROCESS LINES.

H. FOR PIPE TO TURBINE ADAPTERS SEE DRAWING M-530-0002 SHEET 1 AND SPECIFICATION 8031-M-530 FOR THE ADAPTER QUALITY GROUP CLASSIFICATION.

J. COMPONENT SUPPORTS LOCATED BETWEEN THE SYMBOL ⊢—⊣ NOTE J AND THE FIRST SEISMIC ANCHOR OR THE END OF THE CONTINUATION PIPING, AS APPLICABLE, SHALL BE REPAIRED, REPLACED OR MODIFIED IN ACCORDANCE WITH THE ORIGINAL DESIGN REQUIREMENTS AND ASME SECTION III, SUBSUBSUBSECTION NF. PRESERVICE/INSERVICE INSPECTIONS ARE NOT REQUIRED. THE INSERVICE INSPECTIONS ARE NOT REQUIRED. THE REQUIREMENTS OF ASME SECTION XI IWA-4000 AND IWA-7000 SHALL APPLY OR ACCORDANCE WITH PSEG'S REPAIR AND REPLACEMENT PROGRAM. SEE THE APPLICABLE FABRICATION ISOMETRIC DRAWING TO IDENTIFY THE SPECIFIC COMPONENT SUPPORTS.

K. NOT APPLICABLE.

L. NOT APPLICABLE.

M. NOT APPLICABLE.

N. NOT APPLICABLE.

O. REFER TO THE CPR, FOR INSERVICE TEST PROGRAM, DESIGN QUALITY INFORMATION IN THE "ASME SECTION XI ISI" FIELD.

P. PIPING, VALVES AND EQUIPMENT SHOWN WITHIN THIS SYMBOL ⊢—⊣ NOTE P, AS WELL AS THEIR SUPPORTS SHALL BE REPAIRED, REPLACED OR MODIFIED IN ACCORDANCE WITH THE ORIGINAL DESIGN REQUIREMENTS AS MODIFIED BY SPECIFICATION NC-216 AND ASME SECTION III, THE REQUIREMENTS OF ASME SECTION XI, IWA-4000 AND IWA-7000 SHALL APPLY OR ACCORDANCE WITH PSEG'S REPAIR AND REPLACEMENT PROGRAM WITH THE FOLLOWING EXCEPTIONS:

- PRESERVICE/INSERVICE INSPECTIONS ARE NOT REQUIRED.
- RCS-2 FITTINGS ARE NOT REQUIRED.
- AMS INVOLVEMENT IS NOT REQUIRED.

NO	DATE	DESCRIPTION	REVIS	CHKD	APPD
7	3/96	DESIGN, EDR 94-00-RM REVIS. ADDED VENT AND VALVE 1003 TO BONNET OF 1F016, AND VENT AND VALVE 1045 TO BONNET OF 1F046, 1F015 AND 1F045.			
6	3/96	DESIGN, ECR LS 92-00277 REV. 0 PER WO 02202162. CHANGED 51-055-1000 TO FO-050-1000L.			
5	3/95	DESIGN, ECR 94-00763 REV. 0 ADDED REFERENCE TO NOTE P AT WA-1F025.			
4	10-25-93	DESIGN, MOD 90001T ECN A. ADDED NOTE P.			

TABLE OF ADDITIONS & CHANGES
USE ONLY POINTS SHOWING LATEST DATE

MECHANICAL

ASME SECTION XI BOUNDARY P&ID
HIGH PRESSURE COOLANT INJECTION
(UNIT 1)

LIMERICK GENERATING STATION
EXELON NUCLEAR CORP.

SCALE	DRAWN	DES	CHECKED	INSPECTED	APPROVED	DATE
NONE	MCNITEL	MCNITEL	MCNITEL	MCNITEL	MCN	04-05-93

APPROVED ENGINEER: APPROVED:

SHEET 1 OF 8031-ISI-M-55 R 7

ISI-M-55 (SHT. 1)