Enclosure 6

Selected Procedures

SEABROOK STATION

SEVERE ACCIDENT COMPUTATIONAL AID

COMPUTATIONAL AID USAGE
This document is a Computational Aid. This Aid should NOT be used unless entry to the SAMG has been directed from the EOPs. Verbatim compliance with this Aid is not required. This Computational Aid should be used by the SAMG evaluators and decision makers to aid in making the necessary decisions to combat a severe accident.

Prepared By:_____ Reviewed By:_____

APPROVED:

_____
Reliability & Safety Engineering Supervisor

Date Issued _____

Purpose

The purpose of CA-3 is:

- Define whether the hydrogen in the containment atmosphere is flammable, and
- Estimate the hydrogen concentration in the containment atmosphere based on an estimated oxidation percentage.

Assumptions

- This aid is valid for scenarios where the containment fans are on or off.
- Hydrogen released into containment is created with the reactor core through zirconium oxidation.
- 6% hydrogen concentration by volume is defined as the minimum concentration that will sustain a global burn.
- The hydrogen burn is based on a simplified adiabatic isochoric complete combustion for hydrogen.
- No hydrogen ignitors are considered and no previous burns are assumed to have occurred.
- All energy released from the burn is absorbed by the containment atmosphere as increased internal energy.
- The aid assumes the air, steam, and hydrogen within the containment atmosphere are thoroughly mixed at 100% humidity and all behave as ideal gases.
- The air volume is based on initial conditions, plus 10% to account for instrument air leakage, and remains constant throughout each scenario.
- During the core/concrete scenario, the core is assumed to be ex-vessel and the containment atmosphere is superheated.
- During the core/concrete scenario, no additional noncondensable, noncombustible gases are released while additional hydrogen is released.
- For the venting scenarios, the air, steam, and hydrogen are released in the same ratio as they exist in containment when venting takes place.
- When combustion occurs, all hydrogen is assumed to be consumed.
- Expected containment failure has been defined at the pressure at which there is a 5% probability of containment failure, minus 10 psi.

Additional Data

The figures displayed in this aid are for a wet hydrogen measurement only. Wet measurement is chosen because the post accident sampling is performed with steam in the sample. For sampling cases above 300 °F, or cases where heat tracing is lost, condensation in the analyzer will occur and conditions will approach that of a dry measurement where a higher concentration is read resulting in the appearance of a more limiting condition.

CAUTION

Whenever a containment atmosphere hydrogen measurement is taken, verify that the Heat Tracing System is operable and the hydrogen sample path is up to temperature. A sample path is not up to temperature, has the potential for an incorrect containment atmosphere hydrogen measurement since condensation can occur (containment steam) in portions of the unheated sample path. The Post Accident Sample System (PASS) hydrogen sample is also subject to this problem since PASS using a portion the hydrogen analyzer sample path.

IF the Heat Tracing System is inoperable, THEN estimate containment hydrogen concentrations using the following inputs:

- Containment Pressure
- Core Progression
    - IF the core has NOT been reflooded, THEN use "50% Zirc Reaction"

      -OR-

    - If the core has been reflooded, THEN use "75% Zirc Reaction"

      -OR-

    - If the core has relocated outside of the Reactor Vessel THEN use "100% Zirc Reaction"

Figure 3-1

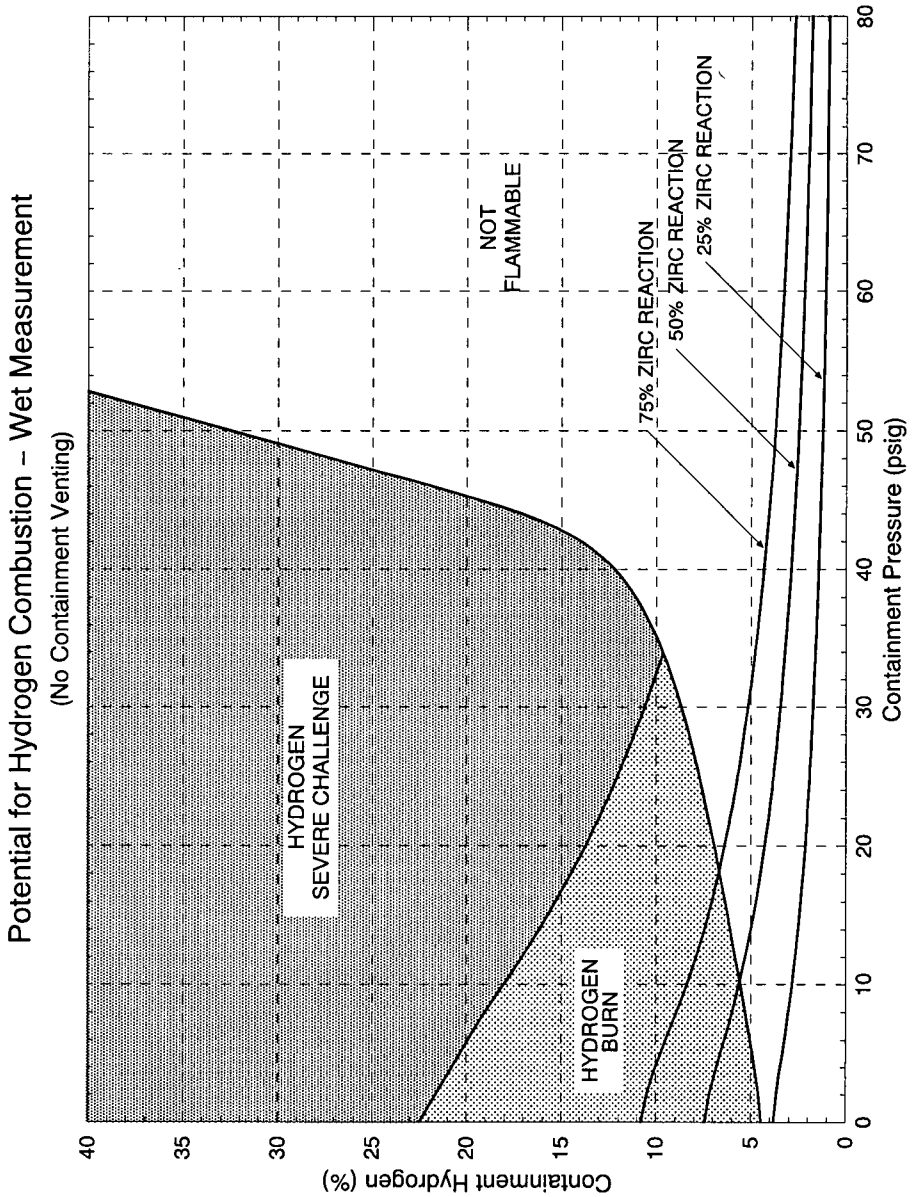
Potential for Hydrogen Combustion – Wet Measurement
(No Containment Venting)
HYDROGEN
SEVERE CHALLENGE
HYDROGEN
BURN
NOT
FLAMMABLE
75% ZIRC REACTION
50% ZIRC REACTION
25% ZIRC REACTION
Containment Hydrogen (%)
Containment Pressure (psig)
0
5
10
15
20
25
30
35
40
0
10
20
30
40
50
60
70
80

Figure 3-2

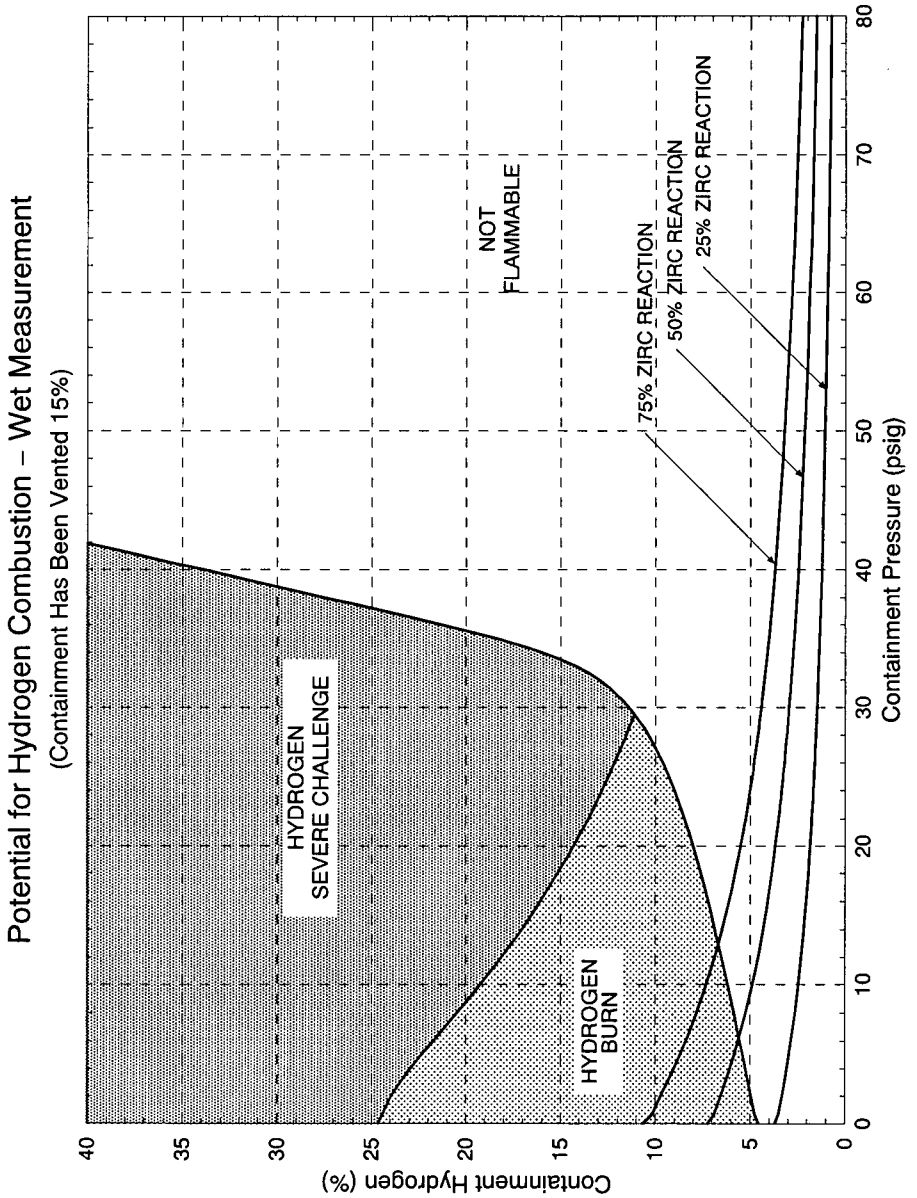
Potential for Hydrogen Combustion – Wet Measurement
(Containment Has Been Vented 15%)
HYDROGEN SEVERE CHALLENGE
HYDROGEN BURN
NOT FLAMMABLE
75% ZIRC REACTION
50% ZIRC REACTION
25% ZIRC REACTION
Containment Hydrogen (%)
Containment Pressure (psig)
0
5
10
15
20
25
30
35
40
0
10
20
30
40
50
60
70
80

Figure 3-3

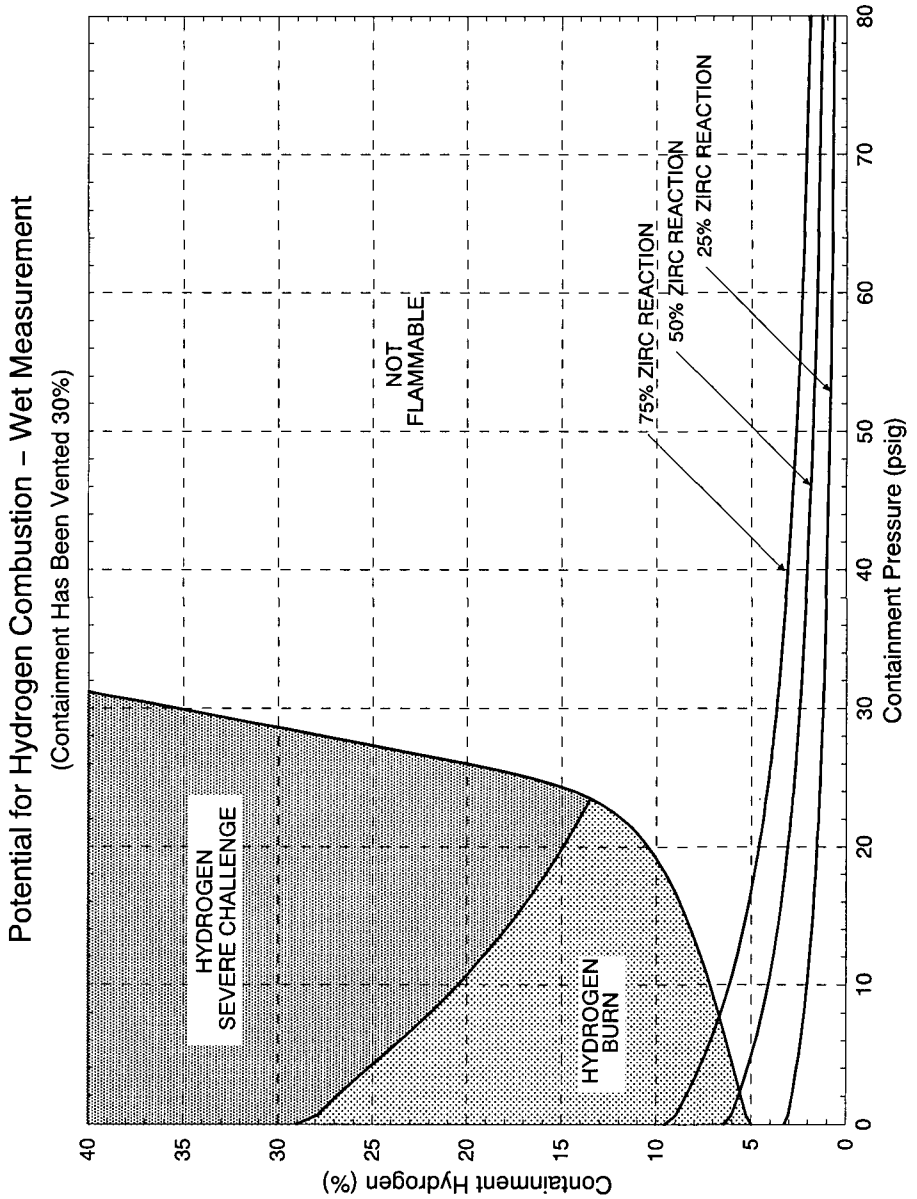
Potential for Hydrogen Combustion – Wet Measurement
(Containment Has Been Vented 30%)
HYDROGEN SEVERE CHALLENGE
NOT FLAMMABLE
HYDROGEN BURN
75% ZIRC REACTION
50% ZIRC REACTION
25% ZIRC REACTION
Containment Hydrogen (%)
Containment Pressure (psig)
0
5
10
15
20
25
30
35
40
0
10
20
30
40
50
60
70
80

Figure 3-4

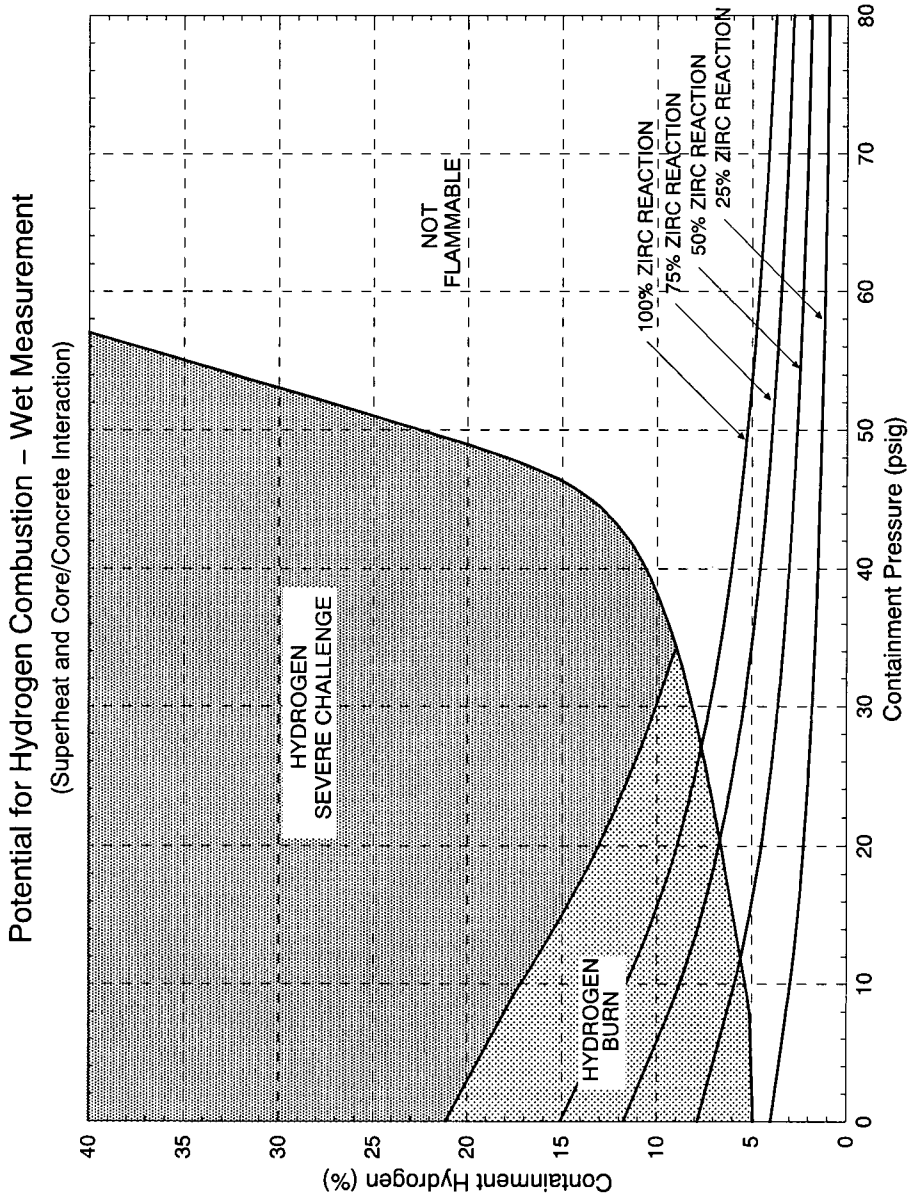
Potential for Hydrogen Combustion – Wet Measurement
(Superheat and Core/Concrete Interaction)
HYDROGEN SEVERE CHALLENGE
NOT FLAMMABLE
HYDROGEN BURN
100% ZIRC REACTION
75% ZIRC REACTION
50% ZIRC REACTION
25% ZIRC REACTION
Containment Hydrogen (%)
Containment Pressure (psig)
0
5
10
15
20
25
30
35
40
0
10
20
30
40
50
60
70
80

Figure 3-5

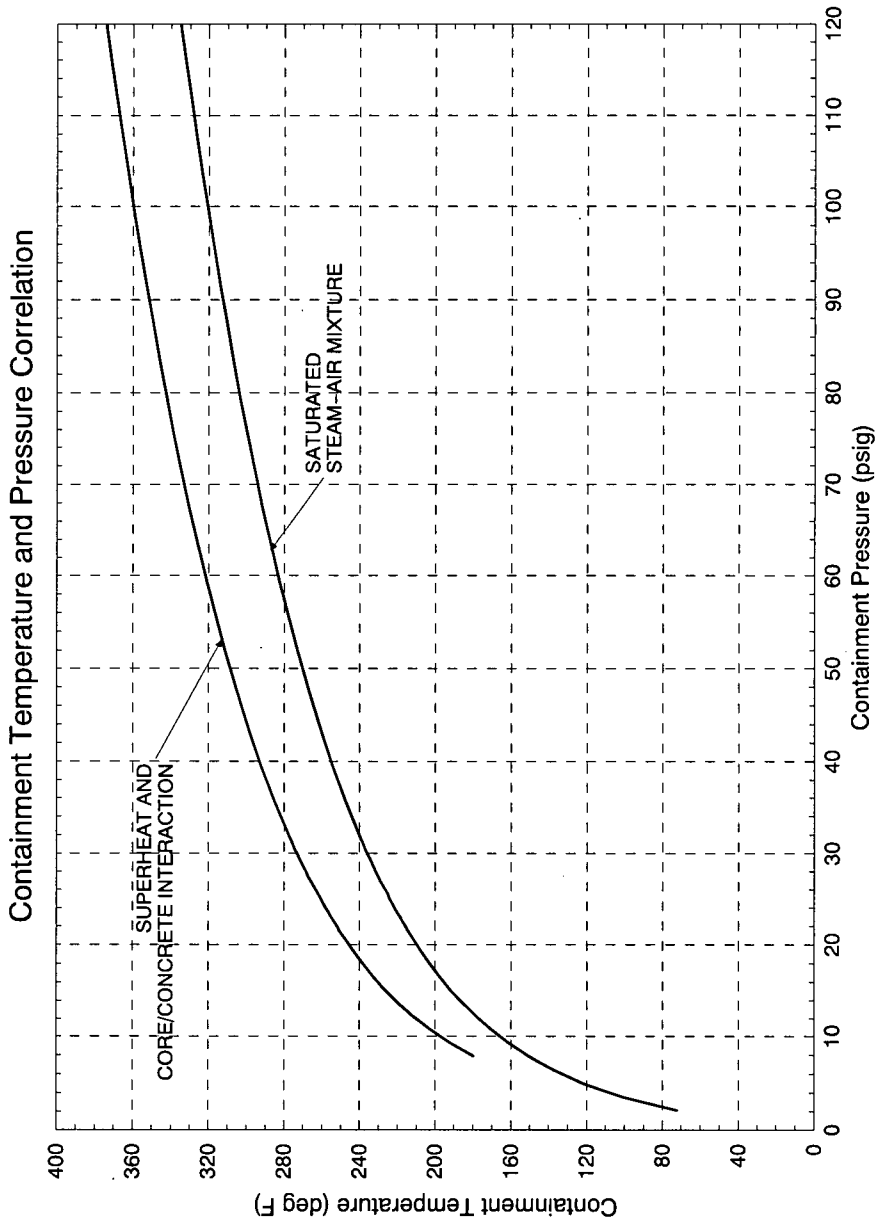
Containment Temperature and Pressure Correlation
SUPERHEAT AND
CORE/CONCRETE INTERACTION
SATURATED
STEAM-AIR MIXTURE
Containment Temperature (deg F)
400
360
320
280
240
200
160
120
80
40
0
Containment Pressure (psig)
0
10
20
30
40
50
60
70
80
90
100
110
120

A. PURPOSE

This procedure provides actions to verify proper response of the automatic protection systems following manual or automatic actuation of a reactor trip or safety injection, to assess plant conditions, and to identify the appropriate recovery procedure.

B. SYMPTOMS OR ENTRY CONDITIONS

1. Any symptom that requires a reactor trip listed in ATTACHMENT B, if one has not occurred.

2. The following are symptoms of a reactor trip:

   a. Any valid reactor trip annunciator lit.

   b. Rapid decrease in neutron level indicated by nuclear instrumentation.

   c. All shutdown and control rods are fully inserted. Rod bottom lights are lit.

3. Any symptom that requires a safety injection listed in ATTACHMENT C, if one has not occurred.

4. The following are symptoms of a reactor trip and safety injection:

   a. Any SI annunciator or the SI Actuation status lamp lit.

   b. ECCS pumps RUNNING IN SI MODE.

C. EXPIRATION DATE

10/13/08

STEP	ACTION/EXPECTED RESPONSE	RESPONSE NOT OBTAINED
	NOTE • *Steps 1 through 4 are IMMEDIATE ACTION steps.* • *Initiate monitoring of critical safety function status trees at step 17 OR if exiting from this procedure.* • *Review OPERATOR ACTION SUMMARY periodically.*	
1	**Verify Reactor Trip:** • Rod bottom lights - LIT • Reactor trip and bypass breakers - OPEN • Neutron flux - DECREASING	Manually trip reactor. IF reactor will NOT trip, THEN go to FR-S.1, RESPONSE TO NUCLEAR POWER GENERATION/ATWS, Step 1.
2	**Verify Turbine Trip:**	
	a. All turbine stop valves - CLOSED	a. Manually trip turbine. IF turbine will NOT trip, THEN close MSIVs. WHEN generator output is ZERO MWe, THEN open generator breaker.
	b. Generator breaker - OPEN	b. WHEN generator output is ZERO MWe, THEN manually open generator breaker.
3	* **Verify Power To AC Emergency Busses:**	
	a. AC emergency busses - AT LEAST ONE ENERGIZED	a. Initiate emergency start of BOTH diesel generators. IF power can NOT be restored to at least one AC emergency bus, THEN go to ECA-0.0, LOSS OF ALL AC POWER, Step 1.
	b. AC emergency busses – BOTH ENERGIZED	b. Try to restore power to other train from emergency diesel generator or offsite source as time permits. Do NOT use SEPS.

STEP	ACTION/EXPECTED RESPONSE	RESPONSE NOT OBTAINED
4	**Check If SI Is Actuated:**	
	a. Check SI annunciators lit • TRAIN A - OR - • TRAIN B	a. Check if SI is required: • RCS pressure - LESS THAN 1800 PSIG - OR - • Pressurizer level - LESS THAN 7% - OR - • Containment pressure - GREATER THAN 4 PSIG - OR - • RCS subcooling - LESS THAN 40°F - OR - • Any SG pressure - LESS THAN 585 PSIG IF SI is required, THEN manually actuate. IF SI is NOT required, THEN go to ES-0.1, REACTOR TRIP RESPONSE, Step 1
	b. Verify both trains of SI - ACTUATED	b. Manually actuate SI.
	NOTE *ATTACHMENT A should be performed in a timely manner as staffing resources permit.*	
5	* **Perform ESF Actuation Verification Per ATTACHMENT A**	

STEP	ACTION/EXPECTED RESPONSE	RESPONSE NOT OBTAINED
6 *	**Monitor RCS Temperature - STABLE AT OR TRENDING TO 557°F** • Tavg recorder - OR - • Wide range cold leg temperature recorders	IF temperature greater than 557°F, THEN: • Dump steam to condenser. - OR - • Dump steam using SG ASDVs. IF temperature less than 557°F and decreasing, THEN: a. Stop dumping steam to condenser and atmosphere. b. Check MS to MSRs isolated. c. IF cooldown continues, THEN open EFW pump mini-flow valves AND throttle total feed flow to maintain greater than 500 GPM. d. WHEN SG level is adequate based on: NORMAL CONTAINMENT • 65% wide range in at least two SGs - OR - • 6% narrow range in at least one SG ADVERSE CONTAINMENT • 15% narrow range in at least one SG THEN throttle feed flow to maintain SG narrow range level between 6% and 50% [15% and 50% FOR ADVERSE CONTAINMENT]. e. IF cooldown continues, THEN: • Close MSIVs • Close MSIV bypass valves • Close upstream drains

STEP	ACTION/EXPECTED RESPONSE	RESPONSE NOT OBTAINED
7	**Check RCS Isolated:**	
	a. Check letdown valve(s) - CLOSED • CS-V145 - OR - • RC-LCV-459 - OR - • RC-LCV-460	a. Manually isolate letdown by closing CS-V145.
	b. PORVs - CLOSED	b. IF PZR pressure less than 2385 PSIG AND LTOP setpoint per FIGURE E-0-1, THEN manually close PORVs. IF any valve can NOT be closed, THEN manually close its block valve. IF block valve can NOT be closed, THEN go to E-1, LOSS OF REACTOR OR SECONDARY COOLANT, Step 1.
	c. Normal PZR spray valves - CLOSED	c. IF PZR pressure less than 2260 PSIG, THEN verify PZR spray control is functioning properly. IF PZR spray control has failed, THEN: 1) Manually close spray valves. IF any valve can NOT be closed, THEN stop RCP supplying failed spray valve: • RC-PCV-455A RC-P-1C • RC-PCV-455B RC-P-1A 2) IF PZR pressure continues to decrease, THEN stop second RCP associated with normal spray valves. IF PZR pressure continues to decrease, THEN stop a third RCP, as necessary.

STEP	ACTION/EXPECTED RESPONSE	RESPONSE NOT OBTAINED
	NOTE *Seal injection flow should be maintained to all RCPs.*	
8	*** Check If RCPs Should Be Stopped:**	
	a. ECCS pumps - AT LEAST ONE RUNNING • CCP - OR - • SI Pump	a. Go to Step 9.
	b. RCS subcooling - LESS THAN 40°F	b. Go to Step 9.
	c. Stop all RCPs	
9	**Check If SG Pressure Boundary Is Faulted:**	
	a. Check pressures in all SGs • ANY SG PRESSURE DECREASING IN AN UNCONTROLLED MANNER - OR - • ANY SG COMPLETELY DEPRESSURIZED	c. Go to Step 10.
	b. Go to E-2, FAULTED STEAM GENERATOR ISOLATION, Step 1	

STEP	ACTION/EXPECTED RESPONSE	RESPONSE NOT OBTAINED
	NOTE *Abnormal main steam line radiation on all main steam lines may be an indication of radiation "shine" from the containment.*	
10	**Check If SG U-Tubes Are Intact:** • Main steamline radiation - NORMAL ON EACH LINE • Condenser air evacuation radiation - NORMAL • Steam generator blowdown radiation - NORMAL • SG narrow range level - NO UNCONTROLLED LEVEL INCREASE	Perform the following: a. IF narrow range level in ruptured SG(s) is greater than 6% [15% FOR ADVERSE CONTAINMENT], THEN open EFW pump mini-flow valves AND stop feed to ruptured SG(s). b. Go to E-3, STEAM GENERATOR TUBE RUPTURE, Step 1.
11	**Check If RCS Is Intact:** • Containment radiation - NORMAL • Containment pressure - NORMAL • Containment building level - NORMAL	Go to E-1, LOSS OF REACTOR OR SECONDARY COOLANT, Step 1.

STEP	ACTION/EXPECTED RESPONSE	RESPONSE NOT OBTAINED
	CAUTION *If offsite power is lost after SI reset, manual action may be required to restart safeguards equipment.*	
12	**Check If ECCS Flow Should Be Reduced:**	
	a. RCS subcooling - GREATER THAN 40°F	a. Go to Step 17.
	b. Secondary heat sink: • Total EFW flow to intact SGs - GREATER THAN 500 GPM - OR - • Wide range level in at least two intact SGs - GREATER THAN 65% - OR - • Narrow range level in at least one intact SG - GREATER THAN 6%	b. IF no condition satisfied, THEN go to Step 17.
	c. RCS pressure - STABLE OR INCREASING	c. Go to Step 17.
	d. PZR level - GREATER THAN 7%	d. Try to stabilize RCS pressure with normal spray. Return to Step 12a.
	e. Reset SI	
	f. Stop all but one CCP and place in standby	
	g. Check RCS pressure - STABLE OR INCREASING BY PRESSURE RECORDER	g. Go to ES-1.2, POST LOCA COOLDOWN AND DEPRESSURIZATION, Step 1

STEP	ACTION/EXPECTED RESPONSE	RESPONSE NOT OBTAINED
	CAUTION *A loss of seal injection may cause RCP seal and bearing temperatures to rise.*	
13*	**Check If All Charging Pumps Should be Stopped:**	
	a. Check PZR level – GREATER THAN 95%	a. Continue with Step 14. IF PZR level exceeds 95% in subsequent steps or procedures, THEN do Steps 13b, 13c, 13d, and 13e.
	b. Check thermal barrier cooling pump – AT LEAST ONE RUNNING	b. Do NOT stop charging pumps. Go to Step 14.
	c. Stop charging pumps as follows: 1) Close CS-V145 2) Stop ALL charging pumps.	
	d. Establish excess letdown per ATTACHMENT I	
	e. Check PZR level – LESS THAN 85%	e. Go to Step 7 of ES-1.1, SI TERMINATION, WHEN PZR level is less than 85%, THEN do Steps 13f, 13g, 13h, 13i, 13j, 13k, 13l, 13m, and 13n.
	f. Open charging mini-flow valves: • CS-V196 • CS-V197	
	g. Align normal charging path • OPEN CS-V142 • OPEN CS-V143	
	h. Isolate CCP to RCS cold legs: • CLOSE SI-V138 • CLOSE SI-V139	

Step continued on the next page.

STEP	ACTION/EXPECTED RESPONSE	RESPONSE NOT OBTAINED
	i. Place CS-FK-121 in manual and minimum output	
	j. Start one charging pump	
	k. Establish 60 GPM charging flow using CS-FK-121	
	l. Adjust seal injection flow between 6 GPM and 10 GPM using CS-HCV-182	
	m. Establish normal letdown per ATTACHMENT H	
	n. Return to procedure and step in effect.	

STEP	ACTION/EXPECTED RESPONSE	RESPONSE NOT OBTAINED
14	**Establish Normal Charging Flow:**	
	a. Align normal charging path: • OPEN CS-V142 • OPEN CS-V143	
	b. Isolate CCP to RCS cold legs: • CLOSE SI-V138 • CLOSE SI-V139	
	c. Establish 60 GPM charging flow using CS-FK-121	
	d. Adjust seal injection flow between 6 GPM and 10 GPM using CS-HCV-182	
	e. Control charging flow to maintain PZR level	e. <u>IF</u> PZR level continues to decrease, <u>THEN</u> perform the following: 1) Align charging path to cold legs: • OPEN SI-V138 • OPEN SI-V139 2) Isolate normal charging path: • CLOSE CS-V142 • CLOSE CS-V143 3) Go to ES-1.2, POST LOCA COOLDOWN AND DEPRESSURIZATION, Step 1

STEP	ACTION/EXPECTED RESPONSE	RESPONSE NOT OBTAINED
15	**Establish RCS Letdown Path:**	
	a. Check PZR level – GREATER THAN 30% [44% FOR ADVERSE CONTAINMENT]	a. Continue with Step 16. WHEN PZR level increases to greater than 30% [44% FOR ADVERSE CONTAINMENT], THEN do Step 15b.
	b. Establish normal letdown per ATTACHMENT H	b. Establish excess letdown per ATTACHMENT I
16	**Go to Step 7 of ES-1.1, SI TERMINATION**	

STEP	ACTION/EXPECTED RESPONSE	RESPONSE NOT OBTAINED
17	**Initiate Monitoring Of Critical Safety Function Status Trees**	
	CAUTION • *CST makeup should be commenced as soon as possible to avoid low inventory problems.* • *EFW pump mini-flow valves must be open before EFW is throttled.*	
18*	**Check SG Levels:**	
	a. Check SG level - GREATER THAN: • 65% WIDE RANGE IN AT LEAST TWO SGs - OR - • 6% NARROW RANGE IN AT LEAST ONE SGs	a. Maintain total feed flow greater than 500 GPM to intact SGs until wide range level greater than 65% in at least two SGs, OR until narrow range level greater than 6% in at least one SG.
	b. Open EFW pump mini-flow valves AND control feed flow to maintain narrow range level between 15% and 50%	b. IF narrow range level in any SG continues to increase in an uncontrolled manner, THEN go to E-3, STEAM GENERATOR TUBE RUPTURE, Step 1.

STEP	ACTION/EXPECTED RESPONSE	RESPONSE NOT OBTAINED
19	**Check Secondary Radiation:** • Main steamline radiation - NORMAL ON EACH LINE • Condenser air evacuation radiation - NORMAL • Steam generator blowdown radiation - NORMAL • SG narrow range level - NO UNCONTROLLED LEVEL INCREASE	Go to E-3, STEAM GENERATOR TUBE RUPTURE, Step 1.
20	**Check Auxiliary Building Radiation - NORMAL USING RDMS**	Evaluate cause of abnormal conditions. IF the cause is a loss of RCS inventory outside containment, THEN go to ECA-1.2, LOCA OUTSIDE CONTAINMENT, Step 1.
21	**Check PRT Conditions - NORMAL** • PORV or SAFETY valve discharge temperature - LESS THAN 140°F • Pressure - BETWEEN 2 and 6 PSIG • Level - BETWEEN 50% and 86% • Temperature - LESS THAN 120°F	Abnormal conditions may be caused by: • Pressurizer PORVs and safeties • RHR relief valves • Letdown relief valve • Seal return header relief valve • Reactor vessel head vent IF abnormal conditions are caused by a PZR Safety OR an unisolated PZR PORV, THEN go to E-1, LOSS OF REACTOR OR SECONDARY COOLANT, Step 1.

STEP	ACTION/EXPECTED RESPONSE	RESPONSE NOT OBTAINED

CAUTION *If additional EFW flow is required, the SUFP can be used on bus 5 if DG A is carrying less than 3600 KW*

22 Reset SI

23 Reset Containment Isolation Phase A And Phase B

- T signal reset
- P signal reset

STEP	ACTION/EXPECTED RESPONSE	RESPONSE NOT OBTAINED
	CAUTION • *The loads placed on the energized AC emergency bus should not exceed the capacity of the power source.* • *Maximum continuous diesel generator load - 6083 KW*	
24	**Check Instrument Air Supplies:**	
	a. Verify instrument air header pressure - NORMAL	a. Locally start service air compressors.
	b. Check PCCW containment isolation valve status: • Loop A - ALL FOUR VALVES OPEN • Loop B - ALL FOUR VALVES OPEN	b. Perform the following: 1) Open IA-V530 2) Open PCCW loop A containment isolation valves: a) CC-V168 b) CC-V57 c) CC-V121 d) CC-V122 3) Open PCCW loop B containment isolation valves: a) CC-V175 b) CC-V176 c) CC-V256 d) CC-V257 4) Start both containment air compressors: • SA-C-4A (Loop A Cooled) • SA-C-4B (Loop B Cooled) 5) <u>WHEN</u> either containment air compressor is started, <u>THEN</u> close IA-V530
	c. Verify containment instrument air header pressure – NORMAL	c. Start both containment air compressors: • SA-C-4A (Loop A Cooled) • SA-C-4B (Loop B Cooled) <u>IF</u> no containment air compressors can be started, <u>THEN</u> open IA-V530.

STEP	ACTION/EXPECTED RESPONSE	RESPONSE NOT OBTAINED

CAUTION *RCS pressure should be monitored. If RCS pressure decreases in an uncontrolled manner to less than 300 PSIG, the RHR pumps must be manually restarted to supply water to the RCS.*

25* Check If RHR Pumps Should Be Stopped:

a. Check RCS Pressure:

1) Pressure - GREATER THAN 300 PSIG	1) Go to E-1, LOSS OF REACTOR OR SECONDARY COOLANT, Step 1.
2) Pressure - STABLE <u>OR</u> INCREASING	2) Go to Step 26.

b. Stop RHR pumps and place in standby

STEP	ACTION/EXPECTED RESPONSE	RESPONSE NOT OBTAINED
26* Check If Diesel Generators Should Be Stopped:		
	a. Verify all AC busses - ENERGIZED BY OFFSITE POWER FROM UATs OR RATs	a. Perform the following: 1) IF any non-vital bus NOT energized from offsite, THEN disable bus equipment per ATTACHMENT K, as necessary. 2) Try to restore offsite power. WHEN offsite power is available, THEN perform the following: a) Restore power to busses E5 and E6 per ATTACHMENT L while continuing with this procedure. b) Restore power from UATs or RATs to bus 1, 2, 3, and 4 and energize loads as necessary.
	b. Stop unloaded emergency diesel generators and reset for auto start 1) Stop DG by depressing both emergency stop buttons 2) After the DG has stopped, reset DG for auto start 3) Isolate SW to the DG	
27	**Return To Step 6.**	

- END -

FIGURE E-0-1 PRESSURE TEMPERATURE LIMITS

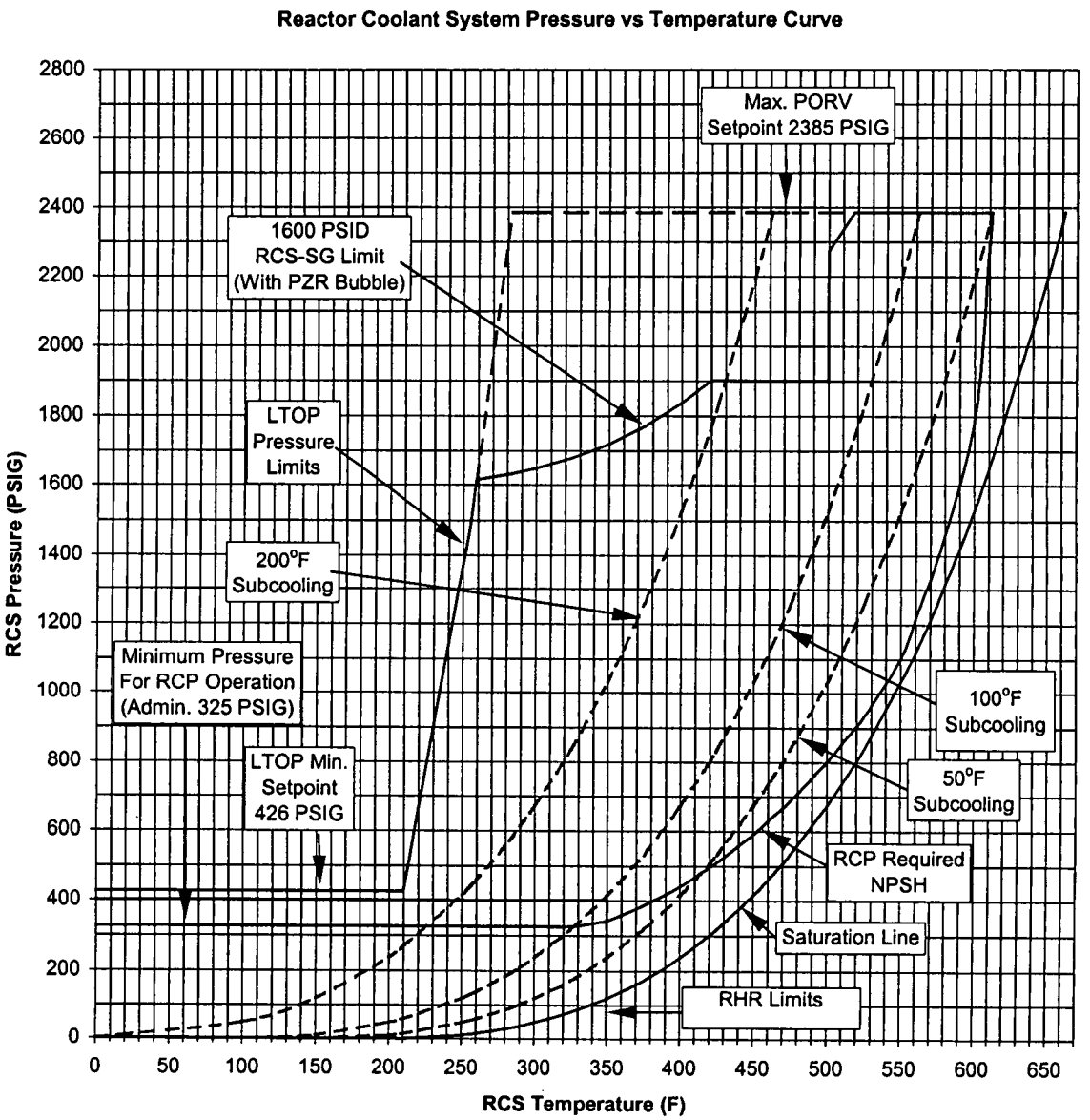

STEP	ACTION/EXPECTED RESPONSE	RESPONSE NOT OBTAINED

ATTACHMENT A

ESF ACTUATION VERIFICATION

Page 1 of 7

NOTE
- *At least one train of ESF components should be aligned before aligning the redundant train.*
- *Verbal communication of manual actions is not required.*

1	**Verify Containment Isolation Phase A Actuation - ALL STATUS PANEL LIGHTS LIT** • Train A • Train B	Perform the following: a. Manually actuate 'T' Signal for BOTH trains. b. Manually align at least ONE train of equipment by status panel. c. Manually align BOTH trains of equipment by status panel, as necessary, while continuing with this attachment.

ATTACHMENT A CONTINUED ON THE NEXT PAGE

STEP	ACTION/EXPECTED RESPONSE	RESPONSE NOT OBTAINED

ATTACHMENT A

ESF ACTUATION VERIFICATION

Page 2 of 7

2	**Verify Safeguard Equipment Alignment - PROPER ALIGNMENT BY STATUS PANEL** • TRAIN A - COLD LEG INJECTION • TRAIN B - COLD LEG INJECTION	Perform the following: a. IF EFW flow control valves are closed, THEN DO NOT open valves to a faulted or ruptured SG unless needed for a cooldown. b. Align at least ONE train of equipment as follows: 1) Manually align valves by status panel OR per ATTACHMENTS D, E, and F. 2) Reset RMO, as necessary. 3) Manually start pumps by status panel. 4) Manually start fans by status panel. c. Manually align BOTH trains of equipment, as necessary, while continuing with this attachment: 1) Manually align valves by status panel OR per ATTACHMENTS D, E, and F. 2) Reset RMO, as necessary. 3) Manually start pumps by status panel. 4) Manually start fans by status panel.

ATTACHMENT A CONTINUED ON NEXT PAGE

STEP	ACTION/EXPECTED RESPONSE	RESPONSE NOT OBTAINED

ATTACHMENT A

ESF ACTUATION VERIFICATION

Page 3 of 7

3	**Verify Feedwater Isolation - PROPER ALIGNMENT BY STATUS PANEL**	Manually align equipment as necessary by status panel: • FW isolation valves - CLOSED • FW regulation valves - CLOSED • FW regulation bypass valves – CLOSED • Main FW pump turbines – TRIPPED
4	**Verify PCCW Pumps Running:** a. Loop A – ONE PUMP RUNNING b. Loop B – ONE PUMP RUNNING c. Thermal barrier cooling pumps – AT LEAST ONE PUMP RUNNING	Perform the following: 1) Reset RMO, as necessary 2) Manually start pumps.

ATTACHMENT A CONTINUED ON NEXT PAGE

STEP	ACTION/EXPECTED RESPONSE	RESPONSE NOT OBTAINED

ATTACHMENT A

ESF ACTUATION VERIFICATION

Page 4 of 7

5	**Verify ECCS Flow:**	
	a. CCP flow indicator - CHECK FOR FLOW TO RCS COLD LEGS	a. Perform the following: 1) Reset RMO, as necessary. 2) Manually align valves and start pumps.
	b. RCS pressure - LESS THAN 1700 PSIG	b. Go to Step 6.
	c. SI pump flow indicators - CHECK FOR FLOW • TRAIN A • TRAIN B	c. Perform the following: 1) Reset RMO, as necessary. 2) Manually align valves and start pumps.
	d. RCS pressure - LESS THAN 300 PSIG	d. Go to Step 6.
	e. RHR pump flow indicators - CHECK FOR FLOW • TRAIN A • TRAIN B	e. Perform the following: 1) Reset RMO, as necessary. 2) Manually align valves and start pumps.

ATTACHMENT A CONTINUED ON NEXT PAGE

STEP	ACTION/EXPECTED RESPONSE	RESPONSE NOT OBTAINED

ATTACHMENT A

ESF ACTUATION VERIFICATION

Page 5 of 7

6	**Verify MS-V129 - OPEN**	Locally reset trip valve per OS1036.03, RESETTING THE STEAM DRIVEN EFW PUMP TRIP VALVE.
7	**Verify Service Water Pumps Running:** • Train A - ONE PUMP RUNNING • Train B - ONE PUMP RUNNING	Perform the following: a. Reset RMO, as necessary. b. Manually start SW pumps. IF service water ocean pumps NOT available, THEN actuate TA signal as necessary. Align equipment as necessary by status panels. IF CT pump is operating, THEN operate CT fan and spray as necessary per ATTACHMENT G.
8	**Verify SW Flow To Train A And Train B Diesels - GREATER THAN REQUIRED** • 900 GPM on OCEAN - OR - • 1800 GPM on cooling tower	Open diesel generator SW isolation valve(s) for running diesel(s): • SW-V16 for DG A • SW-V18 for DG B

ATTACHMENT A CONTINUED ON NEXT PAGE

STEP	ACTION/EXPECTED RESPONSE	RESPONSE NOT OBTAINED

ATTACHMENT A

ESF ACTUATION VERIFICATION

Page 6 of 7

9	**Check If Main Steamlines Should Be Isolated:**	
	a. Check Main Steam Isolation required: • Any SG pressure - LESS THAN 585 PSIG WITHOUT PRIOR P-11 BLOCK - OR - • Main steam line isolation annunciator - LIT - OR - • Containment pressure - GREATER THAN 4 PSIG - OR - • SG pressure rate high bistable - LIT WITH PRIOR P-11 BLOCK	a. Go to Step 10.
	b. Verify MSIV and MSIV bypass valves - CLOSED	b. Manually close valves.

STEP	ACTION/EXPECTED RESPONSE	RESPONSE NOT OBTAINED

ATTACHMENT A

ESF ACTUATION VERIFICATION

Page 7 of 7

10*	**Check Containment Pressure - HAS REMAINED LESS THAN 18 PSIG BY PRESSURE RECORDING**	Verify containment isolation Phase B ('P' signal) and containment spray actuated: a. All Phase B status lights - LIT • TRAIN A • TRAIN B b. IF NOT, THEN actuate BOTH CBS/P/CVI manual actuation switches for each train. c. Reset RMO, as necessary. d. Manually align valves and equipment as necessary by status panel. e. Stop all RCPs.
11	**Verify Total EFW Flow – GREATER THAN 500 GPM**	Perform the following: a. Reset RMO, as necessary. b. Manually start EFW pumps and align valves as necessary. IF EFW pumps are NOT available, THEN start the SUFP on an energized bus per ATTACHMENT J.
12*	**Reset RMO, as necessary**	
13	**Notify US Of Actuation Verification Status**	

- END -

ATTACHMENT B

The following are symptoms that require a reactor trip, if one has not occurred:

FUNCTIONAL UNIT	TRIP SETPOINT
A. POWER RANGE NEUTRON FLUX:	
1) LOW SETPOINT	25% OF RTP
2) HIGH SETPOINT	109% OF RTP
B. POWER RANGE, NEUTRON FLUX, HIGH POSITIVE RATE	5% OF RTP WITH A TIME CONSTANT OF 2 SECONDS
C. INTERMEDIATE RANGE NEUTRON FLUX	25% OF RTP
D. SOURCE RANGE, NEUTRON FLUX	10^5 CPS
E. OVERTEMPERATURE DELTA T	121.0%±PENALTIES
F. OVERPOWER DELTA T	111.6%-PENALTIES
G. PRESSURIZER PRESSURE LOW	1945 PSIG
H. PRESSURIZER PRESSURE HIGH	2385 PSIG
I. PRESSURIZER WATER LEVEL HIGH	92% OF SPAN
J. LOSS OF FLOW	90% OF LOOP DESIGN
K. STEAM GENERATOR WATER LEVEL LOW-LOW	20% OF NARROW RANGE SPAN
L. UNDERVOLTAGE - REACTOR COOLANT PUMPS	10,200 VOLTS
M. UNDERFREQUENCY - REACTOR COOLANT PUMPS	55.5 HZ
N. TURBINE TRIP	
1) LOW TRIP SYSTEM PRESSURE	700 PSIG
2) TURBINE STOP VALVE CLOSURE	NOT FULL OPEN
O. SAFETY INJECTION INPUT FROM ESF	NA
P. GENERAL WARNING	NA

ATTACHMENT C

The following are symptoms that require a reactor trip and safety injection, if one has not occurred:

AUTOMATIC ACTUATION

FUNCTIONAL UNIT	SI SETPOINT
A. PRESSURIZER PRESSURE LOW	1800 PSIG
B. CONTAINMENT PRESSURE HIGH.....	4 PSIG
C. STEAMLINE PRESSURE LOW	585 PSIG

MANUAL ACTUATION

PRESSURIZER LEVEL - CANNOT BE MAINTAINED GREATER THAN 7% USING THE NORMAL CHARGING LINEUP AND ONE CENTRIFUGAL CHARGING PUMP

ATTACHMENT D

ECCS VALVE ALIGNMENT

CCP TO RCS COLD LEGS - TRAIN A

VALVE	NOMENCLATURE	POSITION
CS-LCV-112D	RWST to Charging Pump Suction Header	OPEN
CS-LCV-112B	Charging Pump Suction from VCT	CLOSED
SI-V138	Charging Pump Supply to RCS Cold Legs	OPEN
CS-V142	Charging to Regenerative Heat Exchanger Isolation	CLOSED

CCP TO RCS COLD LEGS - TRAIN B

VALVE	NOMENCLATURE	POSITION
CS-LCV-112E	RWST to Charging Pump Suction Header	OPEN
CS-LCV-112C	Charging Pump Suction from VCT	CLOSED
SI-V139	Charging Pump Supply to RCS Cold Legs	OPEN
CS-V143	Charging to Regenerative Heat Exchanger Isolation	CLOSED

- END -

ATTACHMENT E

ECCS VALVE ALIGNMENT

SI PUMPS TO RCS COLD LEGS - TRAIN A

VALVE	NOMENCLATURE	POSITION
SI-V114	SI Pump Common Discharge Isolation to Cold Legs	OPEN
SI-V102	SI Train A Discharge to Hot Legs 1 and 4	CLOSED
SI-V112	SI Train A Discharge Cross Connect	OPEN
SI-V90	SI Pump A Minimum Flow Isolation to RWST	OPEN
SI-V89	SI Pump B Minimum Flow Isolation to RWST	OPEN
CBS-V49	SI Pump A Suction Isolation	OPEN
CS-V460	RHR Common Cross Connect to SI/Charging Pumps	CLOSED
CBS-V47	Train A Common Suction to SI Pump A/B from RWST	OPEN

SI PUMPS TO RCS COLD LEGS - TRAIN B

VALVE	NOMENCLATURE	POSITION
SI-V77	SI Train B Discharge to Hot Legs 2 and 3	CLOSED
SI-V111	SI Train B Discharge Cross Connect	OPEN
CS-V461	RHR Common Cross Connect to SI/Charging Pumps	CLOSED
CS-V475	RHR Common Cross Connect to SI/Charging Pumps	OPEN
CBS-V53	SI Pump B Suction Isolation	OPEN
SI-V93	SI Pump A/B Common Miniflow Isolation	OPEN
CBS-V51	Train B Common Suction to SI Pump A/B from RWST	OPEN

- END -

ATTACHMENT F
ECCS VALVE ALIGNMENT

RHR PUMPS TO RCS COLD LEGS - TRAIN A

VALVE	NOMENCLATURE	POSITION
RH-V14	RHR Train A to Cold Legs 1 and 2	OPEN
RH-V70	RHR Train A Common Supply to Hot Leg Recirculation	CLOSED
RH-V22	RHR Train A Discharge Cross Connect	OPEN
RH-V35	RHR Pump A Discharge Isolation to SI/Charging Pumps	CLOSED
CBS-V8	Recirculation Sump A Isolation	CLOSED
CBS-V2	RWST to RHR/CBS A Pumps	OPEN
RC-V23	RHR Pump A Suction Isolation from Loop 1 Hot Leg	CLOSED
RC-V88	RHR Pump B Suction Isolation from Loop 4 Hot Leg	CLOSED

RHR PUMPS TO RCS COLD LEGS - TRAIN B

VALVE	NOMENCLATURE	POSITION
RH-V26	RHR Train B to Cold Legs 3 and 4	OPEN
RH-V32	RHR Train B Common Supply to Hot Leg Recirculation	CLOSED
RH-V21	RHR Train B Discharge Cross Connect	OPEN
RH-V36	RHR Pump B Discharge Isolation to SI/Charging Pumps	CLOSED
RC-V22	RHR Pump A Suction Isolation from Loop 1 Hot Leg	CLOSED
RC-V87	RHR Pump B Suction Isolation from Loop 4 Hot Leg	CLOSED
CBS-V5	RWST to RHR/CBS B Pumps	OPEN
CBS-V14	Recirculation Sump B Isolation	CLOSED

- END -

ATTACHMENT G

COOLING TOWER FAN AND SPRAY OPERATION

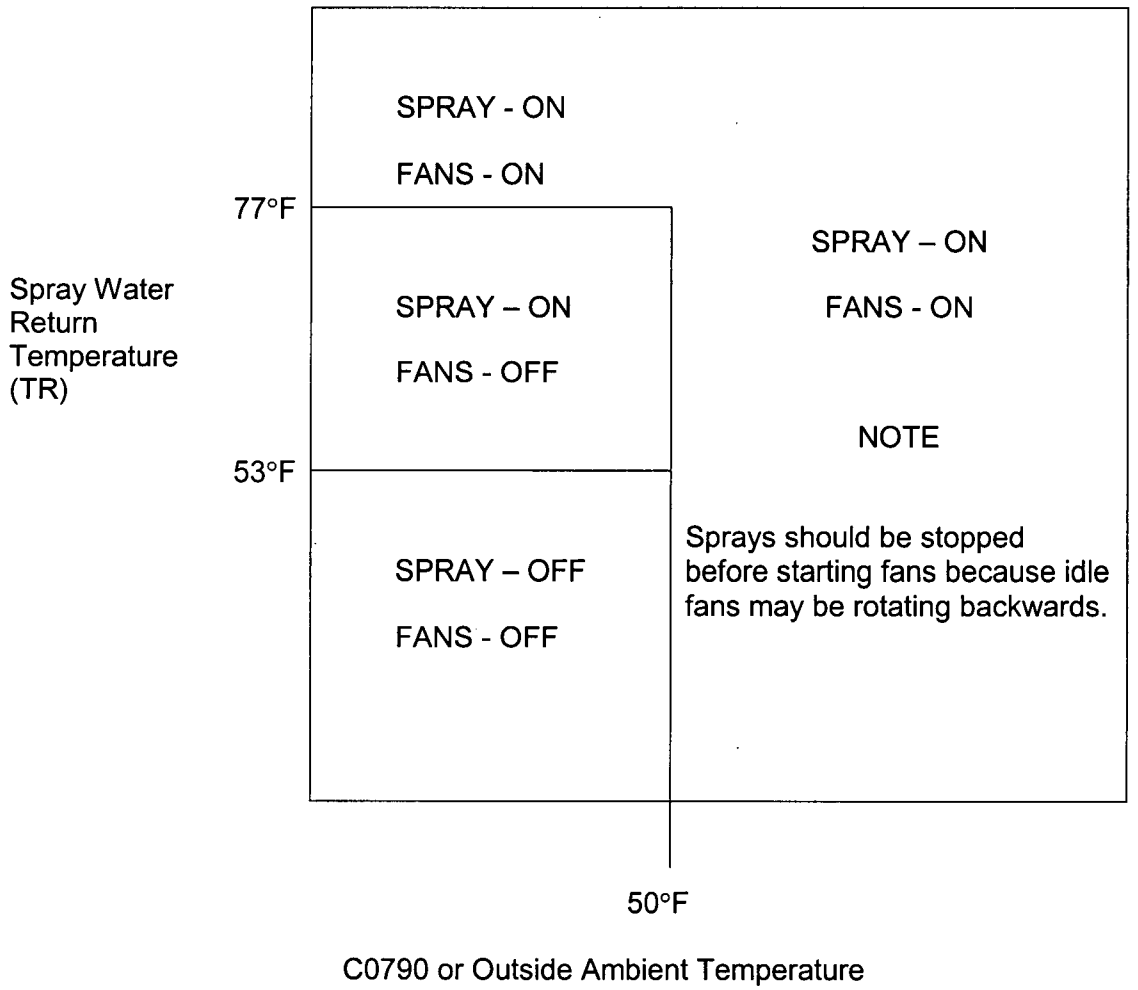

(TR) A1534 or SW-TI-6105 A Train

(TR) A1536 or SW-TI-6115 B Train

STEP	ACTION/EXPECTED RESPONSE	RESPONSE NOT OBTAINED

ATTACHMENT H

ESTABLISHING NORMAL LETDOWN

1	**Establish Normal Letdown:** a. Check PZR level - GREATER THAN 30% [44% FOR ADVERSE b. Reset T signal c. Open CC-V341, letdown HX cooling water outlet d. Close letdown flow control valves: • CS-HCV-189 • CS-HCV-190 e. Open letdown line Phase A isolation valves: • CS-V149 • CS-V150 f. Open letdown line isolation valves: 1) RC-V81 2) RC-LCV-459 3) RC-LCV-460 4) CS-V145 g. Establish 60 GPM charging flow using CS-FK-121 h. Control letdown pressure using CS-PK-131, as necessary. i. Throttle open letdown flow control valve.	Establish excess letdown per ATTACHMENT I

- END -

ATTACHMENT I

ESTABLISHING EXCESS LETDOWN

CAUTION
- *Excess letdown HX outlet temperature of 175°F should not be exceeded.*
- *Excess letdown HX outlet pressure of 150 PSIG should not be exceeded.*

1. Establish excess letdown:
   a. Reset T signal
   b. Open all four B PCCW loop containment isolation valves.
   c. Open CC-V434, excess letdown HX cooling water outlet.
   d. Open RCDT outlet isolation valves:
      - WLD-V81
      - WLD-V82
   e. Close CS-HCV-123
   f. Open excess letdown isolation valves:
      - CS-V175
      - CS-V176
   g. Align CS-V170 to RCDT
   h. Throttle open CS-HCV-123 to establish desired excess letdown pressure and temperature.
   i. IF a charging pump is running, THEN align excess letdown flow to seal return header as follows:
      1) Flush excess letdown line to RCDT for greater than 5 minutes.
      2) Close CS-HCV-123
      3) Open RCP seal return isolation valves:
         - CS-V167
         - CS-V168
      4) Align CS-V170 to seal return header.
      5) Throttle open CS-HCV-123 to establish desired excess letdown pressure and temperature.
      6) Adjust charging flow to control PZR level, as necessary.
   j. Adjust CS-HCV-123 to control PZR level.

- END -

ATTACHMENT J

ESTABLISHING SUFP FLOW

1	**Check power to SUFP and pre-lube pump - AVAILABLE**	Initiate switchover of SUFP breaker to available bus per OS1035.02, STARTUP FEED PUMP OPERATION, as necessary.
2	**Check CST level – GREATER THAN 250,000 gallons**	Dispatch operator to align SUFP suction to CST lower tap isolation valve: a. Open CO-V142, CST lower tap isolation valve. b. Place SUFP suction pressure trip switch (at SUFP) in BYPASS. c. WHEN CO-V142 is open, THEN do step 3.

CAUTION *If additional EFW flow is required, the SUFP can be used on bus E5 if DG A is carrying less than 3600 KW.*

3	**Reset RMO, as necessary**	
4	**Start the SUFP**	
5	**Open FW-V156**	
6	**Throttle open FW-V163 to minimize water hammer AND establish desired flow**	
7	**Open EFW pump mini-flow valves**	
8	**Check CO-V142, CST lower tap isolation valve - OPEN**	Dispatch operator to align SUFP suction to CST lower tap: a. Open CO-V142, CST lower tap isolation valve. b. Place SUFP suction pressure trip switch (at SUFP) in BYPASS.

- END -

ATTACHMENT K

LOCKING OUT DEENERGIZED BUS EQUIPMENT

Perform the following for the deenergized bus as necessary:

a. Place deenergized bus 1, 2, 3 or 4 UAT breakers in PULL TO LOCK

b. Place deenergized bus 1, 2, 3 or 4 RAT breakers in PULL TO LOCK

c. Place deenergized pumps in PULL TO LOCK:

- Circulating water pump(s)
- SCCW pump(s)
- Heater drain pump(s)
- Condensate pump(s)
- Mechanical vacuum pump(s)
- SUFP (bus 4)
- Positive displacement pump
- RCP(s)

- END -

ATTACHMENT L

OFFSITE POWER RESTORATION TO BUS E5 AND E6

CAUTION *Operators should obtain an assessment of grid stability from system dispatcher prior to restoring bus E5 or E6 to an offsite power source.*

1 **IF AC emergency bus is deenergized, THEN restore offsite power as follows:**

a. Close the UAT or RAT breaker while holding the RMO Bypass Switch in the Bypass position.

2 **IF AC emergency bus is powered by emergency diesels 1A/1B, THEN restore offsite power as follows:**

a. Raise DG frequency to 60.2 to 60.4 HZ.

b. Place DG sync. selector switch in the RAT or UAT position.

c. Reset RMO.

d. Adjust DG voltage to match INCOMING VOLTS with RUNNING VOLTS.

e. Adjust DG frequency so that the sync. meter is going slowly in the fast direction.

f. Close the RAT or UAT breaker when synchronized.

g. Place the sync. selector switch in OFF.

h. Shutdown DG by performing the following:

1) Over a 10 minute period lower KVARS to less than 200 lagging and lower load to 75 to 125 KW.

2) Open DG breaker.

3) Adjust DG voltage to 4160 volts.

4) After running DG unloaded for 10 minutes to cool the engine, shutdown the diesel by depressing both emergency stop buttons simultaneously.

5) After waiting two minutes to allow time for diesel to stop, reset the DG.

6) Close SW-V16 for DG A, or SW-V18 for DG B.

ATTACHMENT L CONTINUED ON THE NEXT PAGE

ATTACHMENT L

OFFSITE POWER RESTORATION TO BUS E5 AND E6

3 IF emergency bus 5 is powered by SEPS, THEN restore offsite power to emergency bus 5 as follows:

NOTE *If equipment can not be aligned on bus 6, the TSC should be consulted prior to proceeding with actions to restore offsite power to bus 5.*

a. Check both conditions below are satisfied prior to proceeding with Step 3b:

- Check offsite power is available to emergency bus 5.

- AND -

- Check emergency bus 6 is energized by offsite power.

b. Start one Train B SW pump:

- SW-P-41B

  - OR -

- SW-P-41D

  - OR -

- SW-P-110B (cooling tower actuation mode)

c. Start one Train B PCCW pump:

- CC-P-11B

  - OR -

- CC-P-11D

d. Align charging pump valves, as directed by Unit Supervisor:

- IF safety injection lineup is desired, THEN perform the following:
  1) Open CS-LCV-112E, RWST suction valve.
  2) Open SI-V139, Charging pump discharging to Cold Legs.

  - OR -

- IF normal lineup is desired, THEN perform the following:
  1) Open CS-LCV-112B, VCT suction valve.
  2) Open CS-LCV-112C, VCT suction valve.
  3) Open CS-V142, Charging line isolation valve.
  4) Open CS-V143, Charging line isolation valve.

e. Start CS-P-2B, Centrifugal charging pump.

ATTACHMENT L CONTINUED ON THE NEXT PAGE

ATTACHMENT L

OFFSITE POWER RESTORATION TO BUS E5 AND E6

(ATTACHMENT L high level Step 3 continued)

f. IF turbine driven EFW pump is NOT running, THEN:
   1) Open EFW pump mini-flow valves.
   2) Start FW-P-37B, motor driven EFW pump.

g. Start the following safeguard pumps, as directed by Unit Supervisor:
   1) IF RH-P-8A is running in the ECCS mode, THEN start RH-P-8B, as necessary.
   2) IF SI-P-6A is running in the ECCS mode, THEN start SI-P-6B, as necessary.
   3) IF CBS-P-9A is running in containment spray mode, THEN start CBS-P-9B, as necessary.

h. Align auxiliary equipment:
   - Start CC-P-322B, Thermal barrier cooling pump.
   - Start SA-C-137B, Sierra air compressor.
   - IF SA-C-4A, containment air compressor is running, THEN start SA-C-4B, containment air compressor OR open IA-V530, as necessary.
   - IF A PCCW loop containment structure cooling fans running, THEN start B PCCW loop containment structure cooling fans (maximum five fans):

     CAH-FN-1A
     CAH-FN-1B
     CAH-FN-1D
   - Start EAH-FN-5B, Containment enclosure cooling fan.

i. Stop CC-P-322A, Thermal barrier cooling pump.

j. Place the following pump control switches in the PULL TO LOCK position:
   - SI-P-6A, SI pump
   - RH-P-8A, RHR pump
   - CBS-P-9A, Containment spray pump
   - CS-P-2A, Charging pump
   - CC-P-11A, PCCW pump
   - CC-P-11C, PCCW pump
   - FW-P-113, SUFP (bus E5)

ATTACHMENT L CONTINUED ON THE NEXT PAGE

ATTACHMENT L

OFFSITE POWER RESTORATION TO BUS E5 AND E6

(ATTACHMENT L high level Step 3 continued)

k. Locally place the DG 1A generator breaker control selector switch in the MAINTENANCE position.

l. Deenergize bus 5 by placing the SEPS Bus 5 breaker in the PULL TO LOCK position.

m. Close the UAT or RAT breaker to the emergency bus 5 while holding the RMO Bypass switch in the bypass position.

n. Locally place the DG 1A generator breaker control selector switch in the REMOTE position, as directed by Unit Supervisor.

o. Start one A Train SW pump:

- SW-P-41A

  - OR -

- SW-P-41C

  - OR -

- SW-P-110A (cooling tower actuation mode)

p. Start one A Train PCCW pump:

- CC-P-11A

  - OR -

- CC-P-11C

q. Align auxiliary equipment:

- Start SA-C-137A, Sierra air compressor.
- IF SA-C-4B, containment air compressor is running, THEN start SA-C-4A, containment air compressor OR open IA-V530.
- IF B PCCW loop Containment structure cooling fans running, THEN start A PCCW loop containment structure cooling fans (maximum five fans):

  CAH-FN-1C
  CAH-FN-1E
  CAH-FN-1F

ATTACHMENT L CONTINUED ON THE NEXT PAGE

ATTACHMENT L

OFFSITE POWER RESTORATION TO BUS E5 AND E6

(ATTACHMENT L high level Step 3 continued)

r. Start the following safeguard pumps, as directed by Unit Supervisor:

1) IF RH-P-8B is running in the ECCS mode, THEN start RH-P-8A, as necessary.
2) IF SI-P-6B is running in the ECCS mode, THEN start SI-P-6A, as necessary.
3) IF CBS-P-9B is running in containment spray mode, THEN start CBS-P-9A, as necessary.

s. Place the following non-operating pump control switches on bus 5 to standby:

- SI pump
- RHR pump
- Containment spray pump
- PCCW pump
- Thermal barrier pump
- Charging pump

t. Shutdown SEPS diesels per ON1061.01, OPERATION OF SEPS.

u. Return to procedure and step in effect.

ATTACHMENT L CONTINUED ON THE NEXT PAGE

ATTACHMENT L

OFFSITE POWER RESTORATION TO BUS E5 AND E6

4 IF emergency bus 6 is powered by SEPS, THEN restore offsite power to emergency bus 6 as follows:

NOTE *If equipment can not be aligned on bus 5, the TSC should be consulted prior to proceeding with actions to restore offsite power to bus 6.*

a. Check both conditions below are satisfied prior to proceeding with Step 4b:

- Check offsite power is available to emergency bus 6.

  - AND -

- Check emergency bus 5 is energized by offsite power.

b. Start one Train A SW pump:

- SW-P-41A

  - OR -

- SW-P-41C

  - OR -

- SW-P-110A (cooling tower actuation mode)

c. Start one Train A PCCW pump:

- CC-P-11A

  - OR -

- CC-P-11C

d. Align charging pump valves, as directed by Unit Supervisor:

- IF safety injection lineup is desired, THEN perform the following:
  1) Open CS-LCV-112D, RWST suction valve.
  2) Open SI-V138, Charging pump discharging to Cold Legs.

  - OR -

- IF normal lineup is desired, THEN perform the following:
  1) Open CS-LCV-112B, VCT suction valve.
  2) Open CS-LCV-112C, VCT suction valve.
  3) Open CS-V142, Charging line isolation valve.
  4) Open CS-V143, Charging line isolation valve.

e. Start CS-P-2A, Centrifugal charging pump.

ATTACHMENT L CONTINUED ON THE NEXT PAGE

ATTACHMENT L

OFFSITE POWER RESTORATION TO BUS E5 AND E6

(ATTACHMENT L high level Step 4 continued)

f. IF turbine driven EFW pump is NOT running, THEN start the SUFP on an energized bus per ATTACHMENT J.

g. Start the following safeguard pumps, as directed by Unit Supervisor:

   1) IF RH-P-8B is running in the ECCS mode, THEN start RH-P-8A, as necessary.

   2) IF SI-P-6B is running in the ECCS mode, THEN start SI-P-6A, as necessary.

   3) IF CBS-P-9B is running in containment spray mode, THEN start CBS-P-9A, as necessary.

h. Align auxiliary equipment:

   - Start CC-P-322A, Thermal barrier cooling pump.
   - Start SA-C-137A, Sierra air compressor.
   - IF SA-C-4B, containment air compressor is running, THEN start SA-C-4A, containment air compressor OR open IA-V530.
   - IF B PCCW loop containment structure cooling fans running, THEN start A PCCW loop containment structure cooling fans (maximum five fans):

     CAH-FN-1C
     CAH-FN-1E
     CAH-FN-1F

   - Start EAH-FN-5A, Containment enclosure cooling fan.

i. Stop CC-P-322B, Thermal barrier cooling pump.

j. Place the following pump control switches in the PULL TO LOCK position:

   - SI-P-6B, SI pump
   - RH-P-8B, RHR pump
   - CBS-P-9B, Containment spray pump
   - CS-P-2B, Charging pump
   - CC-P-11B, PCCW pump
   - CC-P-11D, PCCW pump
   - FW-P-37B, motor driven EFW pump

ATTACHMENT L CONTINUED ON THE NEXT PAGE

ATTACHMENT L

OFFSITE POWER RESTORATION TO BUS E5 AND E6

(ATTACHMENT L high level Step 4 continued)

k. Locally place the DG 1B generator breaker control selector switch in the MAINTENANCE position.

l. Deenergize bus 6 by placing the SEPS Bus 6 breaker in the PULL TO LOCK position.

m. Close the UAT or RAT breaker to the emergency bus 6 while holding the RMO Bypass switch in the bypass position.

n. Locally place the DG 1B generator breaker control selector switch in the REMOTE position, as directed by Unit Supervisor.

o. Start one B Train SW pump:

- SW-P-41B

  - OR -

- SW-P-41D

  - OR -

- SW-P-110B (cooling tower actuation mode)

p. Start one B Train PCCW pump:

- CC-P-11B

  - OR -

- CC-P-11D

q. Align auxiliary equipment:

- Start SA-C-137B, Sierra air compressor.
- IF SA-C-4A, containment air compressor is running, THEN start SA-C-4B, containment air compressor OR open IA-V530.
- IF A PCCW loop containment structure cooling fans running, THEN start B PCCW loop containment structure cooling fans (maximum five fans):

  CAH-FN-1A
  CAH-FN-1B
  CAH-FN-1D

ATTACHMENT L CONTINUED ON THE NEXT PAGE

ATTACHMENT L

OFFSITE POWER RESTORATION TO BUS E5 AND E6

(ATTACHMENT L high level Step 4 continued)

r. Start the following safeguard pumps, as directed by Unit Supervisor:

1) IF RH-P-8A is running in the ECCS mode, THEN start RH-P-8B, as necessary.
2) IF SI-P-6A is running in the ECCS mode, THEN start SI-P-6B as necessary.
3) IF CBS-P-9A is running in containment spray mode, THEN start CBS-P-9B, as necessary.

s. Place the following non-operating pump control switches on bus 6 to standby:

- SI pump
- RHR pump
- Containment spray pump
- PCCW pump
- Thermal barrier pump
- Charging pump

t. Shutdown SEPS diesels per ON1061.01, OPERATION OF SEPS.

u. Return to procedure and step in effect.

- END -

A. PURPOSE

This procedure provides actions to terminate leakage of reactor coolant into the secondary system following a steam generator tube rupture.

B. SYMPTOMS OR ENTRY CONDITIONS

This procedure is entered from:

1) E-0, REACTOR TRIP OR SAFETY INJECTION, Step 10 when main steamline, condenser air evacuation, or SG blowdown radiation is abnormal, or when SG narrow range level increases in an uncontrolled manner.

2) E-0, REACTOR TRIP OR SAFETY INJECTION, Step 18,

   E-1, LOSS OF REACTOR OR SECONDARY COOLANT, Step 4,

   E-2, FAULTED STEAM GENERATOR ISOLATION, Step 6,

   ECA-2.1, UNCONTROLLED DEPRESSURIZATION OF ALL STEAM GENERATORS, Step 6

   FR-H.3, RESPONSE TO STEAM GENERATOR HIGH LEVEL, Step 8, when secondary radiation is abnormal.

3) E-0, REACTOR TRIP OR SAFETY INJECTION, Step 19,

   E-1, LOSS OF REACTOR OR SECONDARY COOLANT, Step 3,

   ES-1.2, POST LOCA COOLDOWN AND DEPRESSURIZATION, Step 7,

   ES-3.1, POST-SGTR COOLDOWN USING BACKFILL, Step 4,

   ES-3.2, POST-SGTR COOLDOWN USING BLOWDOWN, Step 3,

   ES-3.3, POST-SGTR COOLDOWN USING STEAM DUMP, Step 4,

   ECA-3.1, SGTR WITH LOSS OF REACTOR COOLANT – SUBCOOLED RECOVERY DESIRED, Step 11,

   ECA-3.2, SGTR WITH LOSS OF REACTOR COOLANT – SATURATED RECOVERY DESIRED, Step 5, and

   ECA-3.3, SGTR WITHOUT PRESSURIZER PRESSURE CONTROL, Step 5 when any intact SG narrow range level increases in an uncontrolled manner.

4) ECA-3.3, SGTR WITHOUT PRESSURIZER PRESSURE CONTROL, Steps 2,3, and 4, when pressurizer pressure control is restored.

5) E-1 Series Operator Action Summary, whenever any SG level increases in an uncontrolled manner or any SG steamline has abnormal radiation.

C. EXPIRATION DATE

07/27/08

STEP	ACTION/EXPECTED RESPONSE	RESPONSE NOT OBTAINED
	NOTE • *Personnel should be available for sampling during this procedure.* • *Review OPERATOR ACTION SUMMARY periodically.* • *Seal injection flow should be maintained to all RCPs.*	
1 *	**Check If RCPs Should Be Stopped:**	
	a. ECCS pumps - AT LEAST ONE RUNNING • CCP - OR - • SI pump	a. Go to Step 2.
	b. RCS subcooling - LESS THAN 40°F	b. Go to Step 2.
	c. Stop all RCPs	
2 *	**Identify Ruptured SGs:** • Uncontrolled increase in any SG narrow range level - OR - • High radiation from any SG steamline - OR - • High radiation from any SG sample - OR - • High radiation from any SG blowdown line	Continue with Steps 8 through 13. WHEN ruptured SG(s) identified, THEN do Steps 3 through 7.

STEP	ACTION/EXPECTED RESPONSE	RESPONSE NOT OBTAINED
	CAUTION • *If the turbine-driven EFW pump is the only available source of feed flow, steam supply to the turbine-driven EFW pump should be maintained from at least one SG.* • *At least one SG must be maintained available for RCS cooldown.*	
3	**Isolate Flow From Ruptured SG(s):**	
	a. Adjust ruptured SG(s) ASDV controller setpoint to 1125 PSIG	
	b. Check ruptured SG(s) ASDV - CLOSED	b. WHEN ruptured SG pressure less than 1125 PSIG, THEN verify SG ASDV closed. IF NOT closed, THEN manually close ASDV: • Place ASDV controller in MANUAL and close valve - OR - • Place ASDV mode selector in CLOSE IF ASDV can NOT be closed, THEN locally close the ASDV inlet isolation valve: SG A MS-V5 SG B MS-V21 SG C MS-V35 SG D MS-V49
	c. Isolate the ruptured SG(s) steam supply to turbine driven EFW pump by closing the applicable valve: SG A MS-V393 SG B MS-V394	c. Locally close ruptured SG steam supply to turbine driven EFW pump: SG A MS-V393 SG B MS-V394

Step continued on the next page.

STEP	ACTION/EXPECTED RESPONSE	RESPONSE NOT OBTAINED
	d. Verify blowdown isolation valve(s) from ruptured SG(s) - CLOSED SG A SB-V9 SG B SB-V10 SG C SB-V11 SG D SB-V12	d. Manually close valve(s).
	e. Close ruptured SG(s) upstream drain valves: SG A MSD-V44 SG B MSD-V45 SG C MSD-V46 SG D MSD-V47	e. Locally close valve(s).

Step continued on the next page.

STEP	ACTION/EXPECTED RESPONSE	RESPONSE NOT OBTAINED
	f. Close ruptured SG(s) MSIV and bypass valve(s)	f. Perform the following: 1) Close all remaining MSIVs and MSIV bypass valves. 2) Verify following valves closed: • Main turbine stop valves • MSR steam supply valves • Dispatch operator to locally close valves per ATTACHMENT A while continuing with this procedure. 3) Transfer RCS temperature control from steam dumps to intact SG ASDVs as follows: a. Use intact SG ASDVs to lower RCS temperature to 557°F. b. Verify condenser steam dumps are closed. 4) Disable condenser steam dumps by placing both steam dump interlock control switches to OFF. IF any ruptured SG can NOT be isolated from at least one intact SG, THEN go to ECA-3.1, SGTR WITH LOSS OF REACTOR COOLANT - SUBCOOLED RECOVERY DESIRED, Step 1

STEP	ACTION/EXPECTED RESPONSE	RESPONSE NOT OBTAINED
	CAUTION *If any ruptured SG is faulted, feed flow to that SG should remain isolated during subsequent recovery actions unless needed for RCS cooldown.*	
4 *	**Check Ruptured SG(s) Level:**	
	a. Narrow range level - GREATER THAN 6% [15% FOR ADVERSE CONTAINMENT]	a. Maintain feed flow to ruptured SG until level greater than 6% [15% FOR ADVERSE CONTAINMENT]. Continue with Step 5. WHEN ruptured SG level greater than 6% [15% FOR ADVERSE CONTAINMENT], THEN open EFW pump mini-flow valves AND stop feed flow to ruptured SG.
	b. Open EFW pump mini-flow valves AND stop feed flow to ruptured SG(s).	
5	**Check Ruptured SG(s) Isolated From Intact SG(s):** • Ruptured SG(s) MSIV and MSIV bypass valves - CLOSED - OR - • At least ONE intact SG MSIV and MSIV bypass valve - CLOSED	DO NOT continue to Step 6 until ruptured SG(s) is isolated from intact SG(s) unless a ruptured SG is needed for RCS cooldown.
6	**Check Ruptured SG(s) Pressure - GREATER THAN 350 PSIG**	Go to ECA-3.1, SGTR WITH LOSS OF REACTOR COOLANT - SUBCOOLED RECOVERY DESIRED, Step 1

STEP	ACTION/EXPECTED RESPONSE	RESPONSE NOT OBTAINED

CAUTION
- *RCP trip criteria does not apply after a controlled cooldown is initiated.*
- *If NO RCPs running, ECCS flow may cause the affected RCS loop cold leg temperature to indicate less than 250°F. If this occurs, FR-P.1, RESPONSE TO IMMINENT PRESSURIZED THERMAL SHOCK CONDITIONS should not be implemented until after performing Step 30.*

7 * Initiate RCS Cooldown:

a. Determine required core exit temperature based on pressure equal to or less than the lowest ruptured SG pressure:

LOWEST RUPTURED SG PRESSURE (PSIG)	CORE EXIT TEMP. (°F) NORMAL OR ADVERSE	LOWEST RUPTURED SG PRESSURE (PSIG)	CORE EXIT TEMP. (°F) NORMAL OR ADVERSE
1150	500	700	445
1100	495	650	435
1050	490	600	425
1000	485	550	420
950	480	500	410
900	470	450	400
850	465	400	385
800	460	350	375
750	450		

Step continued on the next page.

STEP	ACTION/EXPECTED RESPONSE	RESPONSE NOT OBTAINED
	b. Dump steam to condenser from intact SGs as follows: 1) Place the steam dump pressure controller in manual 2) Adjust steam dump pressure controller output to match steam dump demand 3) Transfer steam dump control mode selector to steam pressure 4) Bypass Low Low Tavg interlock as necessary to maintain steam dump operation during cooldown 5) Slowly open steam dumps to prevent a steamline isolation AND establish a maximum cooldown rate	b. Manually or locally dump steam at maximum rate using intact SG(s) ASDV(s). IF no intact SG is available, THEN go to ECA-3.1, SGTR WITH LOSS OF REACTOR COOLANT - SUBCOOLED RECOVERY DESIRED, Step 1
	c. Depressurize the RCS, as necessary and block P-11 per ATTACHMENT B	
	d. Core exit TCs - LESS THAN REQUIRED TEMPERATURE	d. CONTINUE with Steps 8 through 13. WHEN core exit TCs less than required temperature, THEN do Step 7e.
	e. Stop RCS cooldown and maintain temperature	

STEP	ACTION/EXPECTED RESPONSE	RESPONSE NOT OBTAINED

CAUTION
- *CST makeup should be commenced as soon as possible to avoid low inventory problems.*
- *EFW pump mini-flow valves must be open before EFW is throttled.*

8 * Check Intact SG Levels:

a. Check SG level - GREATER THAN:

NORMAL CONTAINMENT

- 65% WIDE RANGE IN AT LEAST TWO SGs

- OR -

- 6% NARROW RANGE IN AT LEAST ONE SG

ADVERSE CONTAINMENT

- 15% NARROW RANGE IN AT LEAST ONE SG

a. Maintain total feed flow greater than 500 GPM until SG level is adequate.

b. Open EFW pump mini-flow valves AND control feed flow to maintain narrow range level between 25% and 50%.

b. IF narrow range level in any SG continues to increase in an uncontrolled manner, THEN stop RCS cooldown and return to Step 1.

STEP	ACTION/EXPECTED RESPONSE	RESPONSE NOT OBTAINED
	CAUTION *If any PZR PORV opens because of high PZR pressure or LTOP, Step 9b should be repeated after pressure decreases to less than the PORV setpoint.*	
9 *	**Check PZR PORVs And Block Valves:**	
	a. Power to block valves - AVAILABLE	a. Restore power to block valves: • RC-V122 MCC-E521 • RC-V124 MCC-E621
	b. PORVs - CLOSED	b. IF PZR pressure less than 2385 PSIG AND LTOP setpoint per FIGURE E-3-1, THEN manually close PORVs. IF PORVs can NOT be closed, THEN close the block valve. IF block valve can NOT be closed, THEN go to ECA-3.1, SGTR WITH LOSS OF REACTOR COOLANT - SUBCOOLED RECOVERY DESIRED, Step 1.
	c. Block valves - AT LEAST ONE OPEN	c. Open one block valve unless it was closed to isolate an open PORV.
	CAUTION *If offsite power is lost after SI reset, manual action may be required to restart safeguards equipment.*	
10	**Reset SI**	
11	**Reset Containment Isolation Phase A And Phase B:** • T signal reset • P signal reset	

STEP	ACTION/EXPECTED RESPONSE	RESPONSE NOT OBTAINED
12	**Check Instrument Air Supplies:**	
	a. Verify instrument air header pressure - NORMAL	a. Locally start service air compressors.
	b. Check PCCW containment isolation valve status: • Loop A - ALL FOUR VALVES OPEN • Loop B - ALL FOUR VALVES OPEN	b. Perform the following: 1) Open IA-V530 2) Open PCCW loop A containment isolation valves: a) CC-V168 b) CC-V57 c) CC-V121 d) CC-V122 3) Open PCCW loop B containment isolation valves: a) CC-V175 b) CC-V176 c) CC-V256 d) CC-V257 4) Start both containment air compressors: • SA-C-4A (Loop A Cooled) • SA-C-4B (Loop B Cooled) 5) <u>WHEN</u> either containment air compressor is started, <u>THEN</u> close IA-V530.
	c. Verify containment instrument air header pressure - NORMAL	c. Start both containment air compressors: • SA-C-4A (Loop A Cooled) • SA-C-4B (Loop B Cooled) <u>IF</u> no containment air compressors can be started, <u>THEN</u> open IA-V530.

STEP	ACTION/EXPECTED RESPONSE	RESPONSE NOT OBTAINED
	CAUTION *RCS pressure should be monitored. If RCS pressure decreases in an uncontrolled manner to less than 300 PSIG, the RHR pumps must be manually restarted to supply water to the RCS.*	
13*	**Check If RHR Pumps Should Be Stopped:**	
	a. RHR pumps – ANY RUNNING WITH RWST SUCTION ALIGNED TO RWST	a. Go to Step 14.
	b. RCS pressure - GREATER THAN 300 PSIG	a. Go to Step 14.
	c. Stop RHR pumps and place in standby	
14	**Check If RCS Cooldown Should Be Stopped:**	
	a. Core exit TCs - LESS THAN REQUIRED TEMPERATURE	a. DO NOT proceed until core exit TCs less than required temperature.
	b. Stop RCS cooldown	
	c. Maintain core exit TCs - LESS THAN REQUIRED TEMPERATURE	
	NOTE *If the ruptured SG pressure decreases after RCS cooldown is stopped, isolation of the SG should be verified before transferring to ECA-3.1, SGTR WITH LOSS OF REACTOR COOLANT - SUBCOOLED RECOVERY DESIRED.*	
15	**Check Ruptured SG Pressure - STABLE OR INCREASING**	IF pressure continues to decrease to less than 250 PSIG above the pressure of the intact SGs used for cooldown, THEN go to ECA-3.1, SGTR WITH LOSS OF REACTOR COOLANT - SUBCOOLED RECOVERY DESIRED, Step 1.
16	**Check RCS Subcooling - GREATER THAN 60°F**	Go to ECA-3.1, SGTR WITH LOSS OF REACTOR COOLANT - SUBCOOLED RECOVERY DESIRED, Step 1.

STEP	ACTION/EXPECTED RESPONSE	RESPONSE NOT OBTAINED
17	**Depressurize RCS To Minimize Break Flow And Refill PZR:**	
	a. Normal PZR spray - AVAILABLE	a. Go to Step 18.
	b. Spray PZR with maximum available spray until ANY of the following conditions satisfied: • BOTH of the following: 1) RCS pressure - LESS THAN RUPTURED SG PRESSURE 2) PZR level - GREATER THAN 7% [28% FOR ADVERSE CONTAINMENT] - OR - • PZR level - GREATER THAN 75% [65% FOR ADVERSE CONTAINMENT] - OR - • RCS subcooling - LESS THAN 40°F	
	c. Stop RCS depressurization: • IF normal PZR spray valve(s) in use, THEN close normal spray valve(s) - OR - • IF auxiliary spray valve in use, THEN remove from service per ATTACHMENT C	c. IF PZR spray valves(s) failed, THEN perform the following: 1) Stop RCP supplying failed spray valve: • RC-PCV-455A RC-P-1C • RC-PCV-455B RC-P-1A 2) IF PZR pressure continues to decrease, THEN stop second RCP associated with normal spray valves. IF PZR pressure continues to decrease, THEN stop a third RCP, as necessary.
	d. Go to Step 20.	

STEP	ACTION/EXPECTED RESPONSE	RESPONSE NOT OBTAINED

CAUTION

- *The PRT may rupture if a PZR PORV is used to depressurize the RCS. This may result in abnormal containment conditions.*
- *Cycling of the PZR PORV should be minimized.*

NOTE *The upper head region may void during RCS depressurization if RCPs are not running. This will result in a rapidly increasing PZR level.*

18 Depressurize RCS Using PZR PORV To Minimize Break Flow And Refill PZR:

a. PZR PORV - AT LEAST ONE AVAILABLE	a. Perform the following to establish auxiliary spray: 1) Verify at least one SI pump running. IF no SI pump running, THEN go to ECA-3.3, SGTR WITHOUT PRESSURIZER PRESSURE CONTROL, Step 1. 2) Verify at least one CCP running. IF no CCP pump running, THEN go to ECA-3.3, SGTR WITHOUT PRESSURIZER PRESSURE CONTROL, Step 1. 3) Establish auxiliary spray flow per ATTACHMENT C and return to Step 17b. IF auxiliary spray flow can NOT be established, THEN go to ECA-3.3, SGTR WITHOUT PRESSURIZER PRESSURE CONTROL, Step 1.

Step continued on the next page.

STEP	ACTION/EXPECTED RESPONSE	RESPONSE NOT OBTAINED
	b. Open one PZR PORV until ANY of the following conditions satisfied: • BOTH of the following: 1) RCS pressure - LESS THAN RUPTURED SG PRESSURE 2) PZR level - GREATER THAN 7% [28% FOR ADVERSE CONTAINMENT] - OR - • PZR level - GREATER THAN 75% [65% FOR ADVERSE CONTAINMENT] - OR - • RCS subcooling - LESS THAN 40°F	
	c. Close PZR PORV	c. Close PORV block valve.
19	**Check RCS Pressure - INCREASING**	Close PZR PORV block valve. IF pressure continues to decrease, THEN perform the following: a. Monitor following conditions for indication of leakage from PZR PORV: • PRT level, temperature, and pressure • PORV discharge temperature b. Go to ECA-3.1, SGTR WITH LOSS OF REACTOR COOLANT - SUBCOOLED RECOVERY DESIRED, Step 1.

STEP	ACTION/EXPECTED RESPONSE	RESPONSE NOT OBTAINED
	CAUTION *ECCS MUST BE TERMINATED when termination criteria are satisfied to prevent overfilling the ruptured SG.*	
20	**Check If ECCS Flow Should Be Terminated:**	
	a. RCS subcooling - GREATER THAN 40°F	a. Go to ECA-3.1, SGTR WITH LOSS OF REACTOR COOLANT - SUBCOOLED RECOVERY DESIRED, Step 1.
	b. Secondary heat sink: • Total feed flow to SG(s) - GREATER THAN 500 GPM AVAILABLE - OR - • Wide range level in at least two intact SGs - GREATER THAN 65% [narrow range level in at least one intact SG - GREATER THAN 15% FOR ADVERSE CONTAINMENT] - OR - • Narrow range level in at least one intact SG - GREATER THAN 6% [15% FOR ADVERSE CONTAINMENT]	b. IF no condition satisfied, THEN go to ECA-3.1, SGTR WITH LOSS OF REACTOR COOLANT - SUBCOOLED RECOVERY DESIRED, Step 1.
	c. RCS pressure - STABLE OR INCREASING	c. Go to ECA-3.1, SGTR WITH LOSS OF REACTOR COOLANT - SUBCOOLED RECOVERY DESIRED, Step 1.
	d. PZR level - GREATER THAN 7% [28% FOR ADVERSE CONTAINMENT]	d. Return to Step 6.
21	**Stop ECCS Pumps And Place In Standby:** • All but one CCP • SI pumps	

STEP	ACTION/EXPECTED RESPONSE	RESPONSE NOT OBTAINED
22	**Restore Normal Charging Path:** • OPEN CS-V142 • OPEN CS-V143	
23	**Establish Normal Charging Flow:** a. Isolate CCP to RCS cold legs: • CLOSE SI-V138 • CLOSE SI-V139 b. Establish 60 GPM charging flow using CS-FCV-121 c. Adjust seal injection flow as necessary using CS-HCV-182	
24*	**Control Charging Flow To Maintain PZR Level**	
25	**Verify ECCS Flow Not Required:**	
	a. RCS subcooling - GREATER THAN 40°F	a. Manually start ECCS pumps as necessary. Go to ECA-3.1, SGTR WITH LOSS OF REACTOR COOLANT - SUBCOOLED RECOVERY DESIRED, Step 1.
	b. PZR level - GREATER THAN 7% [28% FOR ADVERSE CONTAINMENT]	b. Control charging flow to maintain PZR level. IF level can NOT be maintained, THEN manually start ECCS pumps as necessary. Go to ECA-3.1, SGTR WITH LOSS OF REACTOR COOLANT - SUBCOOLED RECOVERY DESIRED, Step 1.
26	**Check VCT Makeup Control System:** a. Makeup set for greater than RCS boron concentration b. Makeup set for automatic control	Adjust controls as necessary.

STEP	ACTION/EXPECTED RESPONSE	RESPONSE NOT OBTAINED
27*	**Check If Letdown Can Be Established:**	
	a. PZR level - GREATER THAN 30% [44% FOR ADVERSE CONTAINMENT]	a. Continue with Step 28. WHEN PZR level increases to greater than 30% [44% FOR ADVERSE CONTAINMENT], THEN do Step 27b.
	b. Establish Letdown: 1) Open CC-V341, letdown HX cooling water outlet 2) Close letdown flow control valves: • CS-HCV-189 • CS-HCV-190 3) Open letdown line Phase A isolation valves: • CS-V149 • CS-V150 4) Open letdown line isolation valves: a) RC-V81 b) RC-LCV-459 c) RC-LCV-460 d) CS-V145 5) Throttle open letdown flow control valve	b. Establish Excess Letdown per ATTACHMENT D.

STEP	ACTION/EXPECTED RESPONSE	RESPONSE NOT OBTAINED

28 Align Charging Pump Suction To VCT:

a. Open VCT outlet isolation valves:

- CS-LCV-112B
- CS-LCV-112C

b. Close RWST outlet isolation valves:

- CS-LCV-112D
- CS-LCV-112E

STEP	ACTION/EXPECTED RESPONSE	RESPONSE NOT OBTAINED
29*	**Check If SI Accumulators Should Be Isolated:**	
	a. Check RCS pressure – LESS THAN 700 PSIG	a. Continue with Step 30. WHEN RCS pressure less than 700 PSIG, THEN do Steps 29b 29c 29d and 29e.
	b. Check the following: • RCS subcooling - GREATER THAN 40°F • PZR level - GREATER THAN 7% [28% FOR ADVERSE CONTAINMENT]	b. Go to ECA-3.1, SGTR WITH LOSS OF REACTOR COOLANT – SUBCOOLED RECOVERY DESIRED, Step 1.
	c. Check power to isolation valves - AVAILABLE 1) Energize MCC-E522 and MCC-E622 2) Power available lights - LIT	c. Restore power to isolation valves: • MCC-E522 SI-V3 SI-V32 • MCC-E622 SI-V17 SI-V47
	d. Close all SI accumulator isolation valves	d. Vent any unisolated accumulators: 1) Open outboard vent valve. 2) Open inboard vent valve. 3) WHEN accumulator is depressurized, THEN close vent valves.
	e. Deenergize MCC-E522 and MCC-E622	

STEP	ACTION/EXPECTED RESPONSE	RESPONSE NOT OBTAINED

CAUTION *RCS and ruptured SG pressures must be maintained less than the ruptured SG ASDV setpoint (1125 PSIG).*

30* Control RCS Pressure And Charging Flow To Minimize RCS-To-Secondary Leakage:

a. Perform appropriate action(s) from table below:

PRESSURIZER LEVEL	RUPTURED STEAM GENERATOR LEVEL INCREASING	DECREASING	OFFSCALE HIGH
LESS THAN 30% [44% FOR ADVERSE CONTAINMENT]	• Increase Charging Flow • Depressurize RCS per Step 30b	Increase Charging Flow	• Increase Charging Flow • Maintain RCS And Ruptured SG Pressures Equal
BETWEEN 30% [44% FOR ADVERSE CONTAINMENT] AND 50%	Depressurize RCS per Step 30b	Turn On PZR Heaters	Maintain RCS And Ruptured SG Pressures Equal
BETWEEN 50% AND 75% [50% AND 65% FOR ADVERSE CONTAINMENT]	• Depressurize RCS per Step 30b • Decrease Charging Flow	Turn On PZR Heaters	Maintain RCS And Ruptured SG Pressures Equal
GREATER THAN 75% [65% FOR ADVERSE CONTAINMENT]	Decrease Charging Flow	Turn On PZR Heaters	Maintain RCS And Ruptured SG Pressures Equal

b. Use normal PZR spray to depressurize when directed by table in Step 30a

b. IF letdown in service, THEN use auxiliary spray per ATTACHMENT E. IF NOT, THEN use one PZR PORV.

STEP	ACTION/EXPECTED RESPONSE	RESPONSE NOT OBTAINED
	NOTE *FR-P.1, RESPONSE TO IMMINENT PRESSURIZED THERMAL SHOCK CONDITIONS may now be implemented as necessary.*	
31*	**Check If Containment Spray Should Be Stopped:**	
	a. Spray pumps - RUNNING	a. Go to Step 32.
	b. Containment pressure - LESS THAN 4.0 PSIG	b. Continue with Step 32. WHEN containment pressure is less than 4.0 PSIG, THEN do Steps 31c, 31d and 31e.
	c. Reset containment isolation Phase B • P signal reset	
	d. Reset containment spray signal • CBS signal reset	
	e. Stop containment spray pumps and place in standby	

STEP	ACTION/EXPECTED RESPONSE	RESPONSE NOT OBTAINED
32*	**Verify All AC Busses - ENERGIZED BY OFFSITE POWER FROM UATs OR RATs**	Perform the following: a. IF any non-vital bus NOT energized from offsite, THEN disable bus equipment per ATTACHMENT F, as necessary. b. Try to restore offsite power. WHEN offsite power is available, THEN perform the following: 1) Restore power to busses E5 and E6 per ATTACHMENT G while continuing with this procedure. 2) Restore power from the UATs or RATs to bus 1, 2, 3, and 4 and energize loads as necessary.
33	**Check If Diesel Generators Should be Stopped:**	
	a. Verify AC emergency busses - ENERGIZED BY UATs OR RATs	a. Go to Step 34.
	b. Stop emergency diesel generators and reset for auto start: 1) Stop DG by depressing both emergency stop buttons 2) After the DG has stopped, reset DG for auto start 3) Isolate SW to the DG	

STEP	ACTION/EXPECTED RESPONSE	RESPONSE NOT OBTAINED
34	**Minimize Secondary System Contamination:** • Ruptured SG(s) ASDV - CLOSED IF BELOW SETPOINT • Align mechanical vacuum pump to PAB • Start auxiliary boiler and transfer auxiliary and seal steam systems from main steam • Isolate hotwell to CST spill by locally closing CO-V67, hotwell spill valve outlet isolation	
35	**Turn On PZR Heaters As Necessary To Saturate PZR Water At Ruptured SG Pressure**	

STEP	ACTION/EXPECTED RESPONSE	RESPONSE NOT OBTAINED
36	**Check RCP Cooling - NORMAL**	
	a. PCCW pumps - RUNNING ONE PUMP PER LOOP	a. Start one pump in each loop.
	b. PCCW containment isolation valves to RCP motors - OPEN • Loop A – ALL FOUR VALVES OPEN • Loop B – ALL FOUR VALVES OPEN	b. Perform the following: 1) Open PCCW loop A containment isolation valves: a) CC-V168 b) CC-V57 c) CC-V121 d) CC-V122 2) Open PCCW loop B containment isolation valves: a) CC-V175 b) CC-V176 c) CC-V256 d) CC-V257
	c. One thermal barrier cooling water pump - RUNNING	c. Start one thermal barrier cooling water pump
	d. Seal injection - 6 GPM TO 10 GPM TO EACH RCP	d. Adjust as necessary using CS-HCV-182

STEP	ACTION/EXPECTED RESPONSE	RESPONSE NOT OBTAINED
37*	**Check If RCP Seal Return Flow Should Be Established:**	
	a. Check RCS pressure - GREATER THAN 200 PSIG	a. Go to Step 38.
	b. Check seal injection flow – GREATER THAN 6 GPM TO EACH RCP	b. Adjust seal injection flow. IF seal injection can NOT be established, THEN go to Step 38.
	c. Check RCS coolant activity – NORMAL	c. Consult TSC to determine if seal return flow should be established to the PAB while continuing with Step 38.
	d. Establish seal return flow: 1) Open RCP seal return header Phase A isolation valves: • CS-V167 • CS-V168 2) Check RCP seal leakoff valves - OPEN • RC-P-1A CS-V10 • RC-P-1B CS-V28 • RC-P-1C CS-V44 • RC-P-1D CS-V59	

STEP	ACTION/EXPECTED RESPONSE	RESPONSE NOT OBTAINED

CAUTION *If RCP seal cooling has previously been lost, the affected RCP should not be started prior to a status evaluation.*

NOTE
- *RCPs should be run in order of priority to provide normal PZR spray. RC-P-1C is best for spray, then RC-P-1A and all available non-spray RCPs.*
- *Starting an RCP while on natural circulation may cause SG safety valve actuation due to a rapid rise in SG level and pressure.*

38* Check RCP Status:

a. RCP 1C – RUNNING

b. Stop RCP(s) NOT required for normal spray

a. Try to start RCP(s) to provide normal PZR spray:

1) IF RVLIS full range level less than 92%, THEN perform the following:
   - Increase PZR level to greater than 65% [80% FOR ADVERSE CONTAINMENT].
   - Increase RCS subcooling to greater than 70°F.
   - Use PZR heaters, as necessary to saturate the PZR water.

2) Establish conditions for starting RCP(s) per ATTACHMENT I.

3) WHEN RCP support conditions established, THEN start RCP 1C. IF RCP 1C can NOT be started, THEN try to start all available RCPs to provide normal spray.

   IF an RCP can NOT be started, THEN refer to ATTACHMENT J to verify natural circulation. IF natural circulation NOT verified, THEN increase dumping steam.

STEP	ACTION/EXPECTED RESPONSE	RESPONSE NOT OBTAINED
39*	**Check If Source Range Detectors Should Be Energized:**	
	a. Check intermediate range flux - LESS THAN 10^{-10} AMPS	a. Continue with Step 40. WHEN flux less than 10^{-10} AMPS, THEN do Steps 39b and 39c.
	b. Verify source range detectors - ENERGIZED	b. Manually energize source range detectors.
	c. Transfer NR-45 to source range scale	
40	**Realign Plant Equipment In Accordance With Normal Operating Procedures:**	
	a. Place BTRS to OFF	
	b. Verify both heater drain pumps - TRIPPED	b. Trip both heater drain pumps.
	c. Stop ALL BUT ONE condensate pump	
	d. Shutdown non contributing equipment: • Evaporators • Degasifiers	
41	**Go To Appropriate Post-SGTR Cooldown Method Based On Available Plant Equipment:**	
	• Go to ES-3.1, POST-SGTR COOLDOWN USING BACKFILL, Step 1 - OR - • Go to ES-3.2, POST-SGTR COOLDOWN USING BLOWDOWN, Step 1 - OR - • Go to ES-3.3, POST-SGTR COOLDOWN USING STEAM DUMP, Step 1 - END -	

FIGURE E-3-1 PRESSURE TEMPERATURE LIMITS

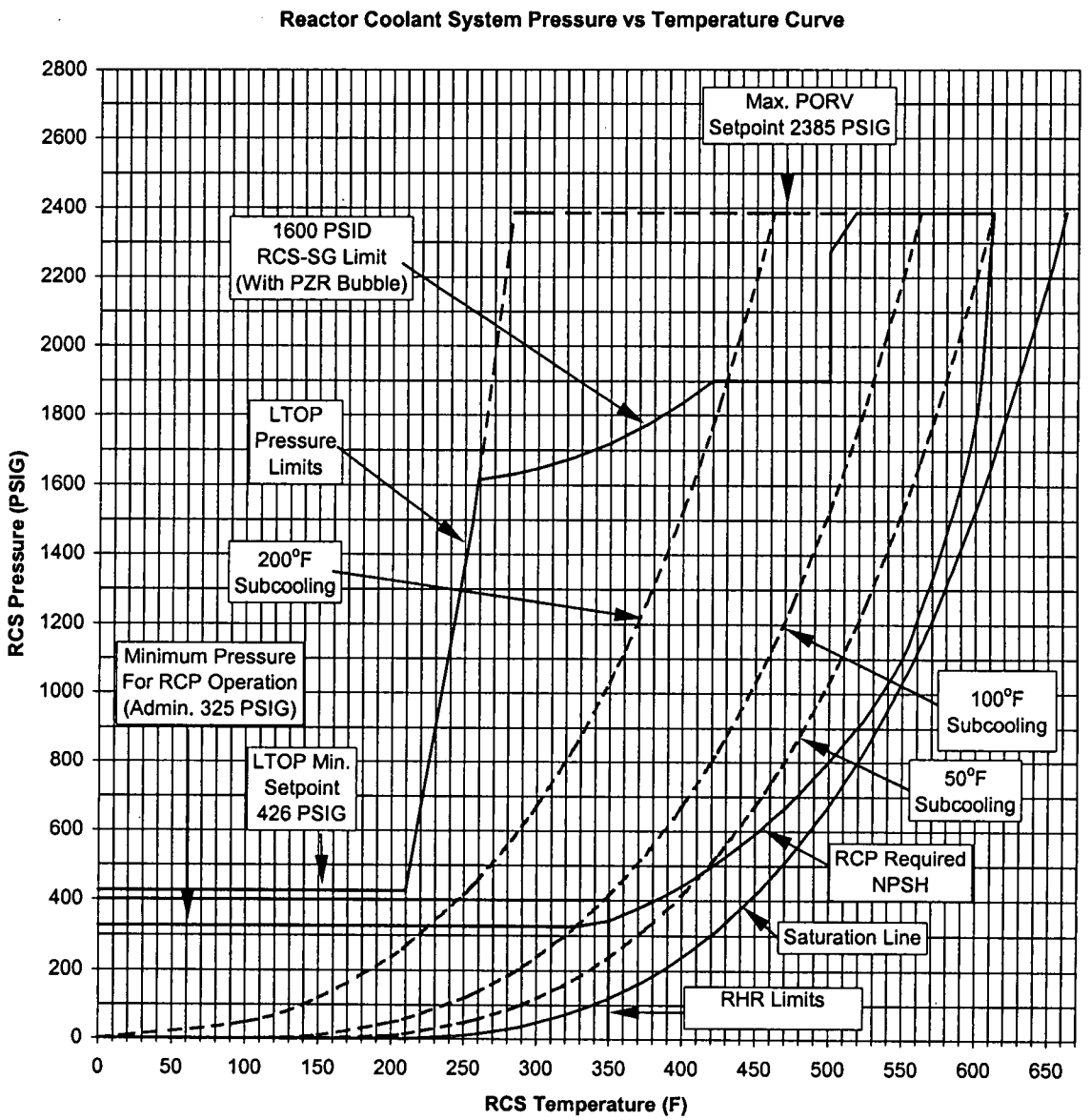

ATTACHMENT A

NOTE The following valves must be closed to isolate a ruptured SG upon failure of the ruptured SG MSIV or bypass valve to close.

GROUP A DRAINS at CP-66 (50' South Turbine Building)

MSD-V1	Turbine Stop Valve Upstream Drain
MSD-V2	Turbine Stop Valve Upstream Drain
MSD-V3	Turbine Stop Valve Upstream Drain
MSD-V4	Turbine Stop Valve Upstream Drain
MSD-V5	Turbine Stop Valve Above Seat Drain
MSD-V6	Turbine Stop Valve Above Seat Drain
MSD-V7	Turbine Stop Valve Above Seat Drain
MSD-V8	Turbine Stop Valve Above Seat Drain
MSD-V53	Main Steam Isolation Downsteam Drain
MSD-V55	Main Steam Isolation Downsteam Drain
MSD-V57	Main Steam Isolation Downsteam Drain
MSD-V59	Main Steam Isolation Downsteam Drain

ATTACHMENT A CONTINUED ON THE NEXT PAGE

ATTACHMENT A

TURBINE BUILDING 50'

MS-V381	Steam Dump Bypass Orifice 3270 Isolation
MS-V382	Steam Dump Bypass Orifice 3271 Isolation
MS-V383	Steam Dump Bypass Orifice 3272 Isolation
MS-V384	Steam Dump Bypass Orifice 3273 Isolation
MS-V385	Steam Dump Bypass Orifice 3274 Isolation
MS-V386	Steam Dump Bypass Orifice 3275 Isolation
MS-V387	Steam Dump Bypass Orifice 3276 Isolation
MS-V388	Steam Dump Bypass Orifice 3277 Isolation
MS-V389	Steam Dump Bypass Orifice 3278 Isolation
MS-V390	Steam Dump Bypass Orifice 3279 Isolation
MS-V391	Steam Dump Bypass Orifice 3280 Isolation
MS-V392	Steam Dump Bypass Orifice 3281 Isolation
MSD-V79	Auxiliary Steam Supply Line Drain (Aux Stm Reducer area)
MS-V15	Main Steam to Auxiliary Steam Isolation (Aux Stm Reducer area)
MS-V114	Main Steam to Seal Supply Isolation (60' Stop Valve #4 area)
MSD-V91	Main Steam to MSRs A & C Drain (Aux Stm Reducer area)
MS-V249	A MSR Bypass Isolation (in overhead 15' North of MCC 523)
MS-V250	C MSR Bypass Isolation (in overhead 15' North of MCC 523)
CAS-V59	Main Steam Header Sample Isolation (behind CAS-CP-148 sample panel)
CAS-V60	Main Steam Header Sample Isolation (behind CAS-CP-148 sample panel)
CAS-V62	Main Steam Header Sample Isolation (behind CAS-CP-148 sample panel)
CAS-V64	Main Steam Header Sample Isolation (behind CAS-CP-148 sample panel)

ATTACHMENT A CONTINUED ON THE NEXT PAGE

ATTACHMENT A

MAIN FEED PUMP TURBINES HP STEAM SUPPLY DRAINS (Feed pump rooms)

MVD-V141 MFP-A Steam Supply Line Drain Orifice Bypass (west side under grating)

MVD-V208 MFP-A Steam Supply Line Drain Orifice Isolation (west side under grating)

MVD-V142 MFP-A High Pressure Stop Valve Above Seat Drain (FW-CP-144)

MVD-V160 MFP-B Steam Supply Line Drain Orifice Bypass (west side under grating)

MVD-V210 MFP-B Steam Supply Line Drain Orifice Isolation (west side under grating)

MVD-V147 MFP-B High Pressure Stop Valve Above Seat Drain (FW-CP-145)

TURBINE BUILDING 75'

MS-V251 D MSR Bypass Isolation (East side of MSR)

MS-V252 B MSR Bypass Isolation (East side of MSR)

WEST PIPE CHASE

MSD-V63 A MSIV Body Drain

MSD-V66 D MSIV Body Drain

EAST PIPE CHASE

MSD-V64 B MSIV Body Drain

MSD-V65 C MSIV Body Drain

YARD DRAINS

MSD-V227 Loops 2 & 3 Steamline Yard Drain Header Isolation

MSD-V215 Loops 2 & 3 Steamline Yard Drain Header Isolation

MSD-V233 Loops 1 & 4 Steamline Yard Drain Header Isolation

MSD-V221 Loops 1 & 4 Steamline Yard Drain Header Isolation

- END -

STEP	ACTION/EXPECTED RESPONSE	RESPONSE NOT OBTAINED

ATTACHMENT B

BLOCKING LOW STEAMLINE PRESSURE SI

NOTE *After the low steamline pressure SI is blocked, a high steam pressure rate signal will cause a steamline isolation.*

1 Check PZR pressure – LESS THAN 1950 PSIG

Perform the following:

a. Depressurize PZR pressure to less than 1950 PSIG:

- Using normal PZR spray(s).

  - OR -

- IF normal PZR spray is NOT available, THEN use PORV(s).

b. WHEN PZR pressure is less than 1950 PSIG, THEN do step 2.

2 Block Low Steamline Pressure SI:

a. Verify high steam pressure rate bistables NOT lit on UL-1. Control steam flow as necessary to prevent high steam pressure rate MSI isolation.

b. WHEN P-11 Block Bistable light is lit on UL-1, THEN depress both Steamline Safety Injection Block switches

3 Maintain PZR pressure less than 1925 PSIG:

- Using normal PZR spray(s).

  - OR -

- IF normal PZR spray is NOT available, THEN use PORV(s).

4 Notify Unit Supervisor on Steamline Safety Injection Block status

- END -

ATTACHMENT C

OPERATION OF AUXILIARY SPRAY WITH SI IN SERVICE

1. Establishing Auxiliary Spray:

   a. Verify normal PZR spray valves closed.

   b. Open the following valves:

      - CS-V142, CHG TO REGEN ISO
      - CS-V143, CHG TO REGEN ISO
      - CS-V185, PZR AUX SPRAY

   c. Close CCP to RCS cold leg isolation valves:

      - SI-V138
      - SI-V139

   d. Close normal charging loop isolation valves:

      - CS-V177
      - CS-V180

   e. Place CS-FK-121 in manual and charge at maximum rate.

   f. Adjust seal injection flow as necessary using CS-HCV-182.

   g. Go to Step 17b.

ATTACHMENT C CONTINUED ON THE NEXT PAGE

ATTACHMENT C

OPERATION OF AUXILIARY SPRAY WITH SI IN SERVICE

2. Removing Auxiliary Spray From Service:

   a. Open CCP to RCS cold leg isolation valves:

      - SI-V138
      - SI-V139

   b. Close the following valves:

      - CS-V185, PZR AUX SPRAY
      - CS-V142, CHG TO REGEN ISO
      - CS-V143, CHG TO REGEN ISO

   c. Place CS-FK-121 in auto, as necessary.

   d. Open desired normal charging loop isolation valve:

      - CS-V177

        - OR -

      - CS-V180

- END -

ATTACHMENT D

ESTABLISHING EXCESS LETDOWN

CAUTION
- *Excess letdown HX outlet temperature of 175°F should not be exceeded.*
- *Excess letdown HX outlet pressure of 150 psig should not be exceeded.*

1. Establish excess letdown:

   a. Open all four B PCCW loop containment isolation valves.

   b. Open CC-V434, excess letdown HX cooling water outlet.

   c. Open RCP seal return isolation valves:

      - CS-V167
      - CS-V168

   d. Open RCDT outlet isolation valves:

      - WLD-V81
      - WLD-V82

   e. Close CS-HCV-123

   f. Open excess letdown isolation valves:

      - CS-V175
      - CS-V176

   g. Align CS-V170 to RCDT

   h. Throttle open CS-HCV-123 to establish desired excess letdown pressure and temperature.

   i. Flush excess letdown line to RCDT for greater than 5 minutes.

   j. Close CS-HCV-123

   k. Align CS-V170 to seal return header.

   l. Throttle open CS-HCV-123 to establish desired excess letdown pressure and temperature.

- END -

ATTACHMENT E

OPERATION OF AUXILIARY SPRAY WITHOUT SI IN SERVICE

1. Place normal PZR spray valve controller(s) in manual and open normal PZR spray valves.

2. Open the following valves:

   - CS-V142, CHG TO REGEN ISO
   - CS-V143, CHG TO REGEN ISO
   - CS-V185, PZR AUX SPRAY

3. Close normal charging loop isolation valves:

   - CS-V177
   - CS-V180

4. Perform the following to initiate auxiliary spray.

   a. Place CS-FK-121 in manual and charge at desired rate.

   b. Control RCS pressure as follows:

      - Throttle normal PZR spray valves, as necessary.
      - Adjust charging flow, as necessary.

5. Adjust seal injection flow as necessary using CS-HCV-182.

6. WHEN auxiliary spray is no longer required, THEN perform the following:

   a. Open desired normal charging loop isolation valve:

      - CS-V177

        - OR -

      - CS-V180

   b. Close CS-V185, PZR AUX SPRAY

   c. Place CS-FK-121 in auto, as necessary.

   d. Close normal PZR spray valve(s), as necessary.

- END –

ATTACHMENT F

LOCKING OUT DEENERGIZED BUS EQUIPMENT

Perform the following for the deenergized bus as necessary:

a. Place deenergized bus 1, 2, 3 or 4 UAT breakers in PULL TO LOCK

b. Place deenergized bus 1, 2, 3 or 4 RAT breakers in PULL TO LOCK

c. Place deenergized pumps in PULL TO LOCK:

- Circulating water pump(s)
- SCCW pump(s)
- Heater drain pump(s)
- Condensate pump(s)
- Mechanical vacuum pump(s)
- SUFP (bus 4)
- Positive displacement pump
- RCP(s)

- END -

ATTACHMENT G

OFFSITE POWER RESTORATION TO BUS E5 AND E6

CAUTION *Operators should obtain an assessment of grid stability from system dispatcher prior to restoring bus E5 or E6 to an offsite power source.*

1 **IF AC emergency bus is deenergized, THEN restore offsite power as follows:**

a. Close the UAT or RAT breaker while holding the RMO Bypass Switch in the Bypass position.

2 **IF AC emergency bus is powered by emergency diesels 1A/1B, THEN restore offsite power as follows:**

a. Raise DG frequency to 60.2 to 60.4 HZ.

b. Place DG sync. selector switch in the RAT or UAT position.

c. Reset RMO.

d. Adjust DG voltage to match INCOMING VOLTS with RUNNING VOLTS.

e. Adjust DG frequency so that the sync. meter is going slowly in the fast direction.

f. Close the RAT or UAT breaker when synchronized.

g. Place the sync. selector switch in OFF.

h. Shutdown DG by performing the following:

1) Over a 10 minute period lower KVARS to less than 200 lagging and lower load to 75 to 125 KW.

2) Open DG breaker.

3) Adjust DG voltage to 4160 volts.

4) After running DG unloaded for 10 minutes to cool the engine, shutdown the diesel by depressing both emergency stop buttons simultaneously.

5) After waiting two minutes to allow time for diesel to stop, reset the DG.

6) Close SW-V16 for DG A, or SW-V18 for DG B.

ATTACHMENT G CONTINUED ON THE NEXT PAGE

ATTACHMENT G

OFFSITE POWER RESTORATION TO BUS E5 AND E6

3 IF emergency bus 5 is powered by SEPS, THEN restore offsite power to emergency bus 5 as follows:

NOTE *If equipment can not be aligned on bus 6, the TSC should be consulted prior to proceeding with actions to restore offsite power to bus 5.*

a. Check both conditions below are satisfied prior to proceeding with Step 3b:

- Check offsite power is available to emergency bus 5.

- AND -

- Check emergency bus 6 is energized by offsite power.

b. Start one Train B SW pump:

- SW-P-41B

  - OR -

- SW-P-41D

  - OR -

- SW-P-110B (cooling tower actuation mode)

c. Start one Train B PCCW pump:

- CC-P-11B

  - OR -

- CC-P-11D

d. Align charging pump valves, as directed by Unit Supervisor:

- IF safety injection lineup is desired, THEN perform the following:
  1) Open CS-LCV-112E, RWST suction valve.
  2) Open SI-V139, Charging pump discharging to Cold Legs.

  - OR -

- IF normal lineup is desired, THEN perform the following:
  1) Open CS-LCV-112B, VCT suction valve.
  2) Open CS-LCV-112C, VCT suction valve.
  3) Open CS-V142, Charging line isolation valve.
  4) Open CS-V143, Charging line isolation valve.

e. Start CS-P-2B, Centrifugal charging pump.

ATTACHMENT G CONTINUED ON THE NEXT PAGE

ATTACHMENT G

OFFSITE POWER RESTORATION TO BUS E5 AND E6

(ATTACHMENT G high level Step 3 continued)

f. IF turbine driven EFW pump is NOT running, THEN:

1) Open EFW pump mini-flow valves.

2) Start FW-P-37B, motor driven EFW pump.

g. Start the following safeguard pumps, as directed by Unit Supervisor:

1) IF RH-P-8A is running in the ECCS mode, THEN start RH-P-8B, as necessary.

2) IF SI-P-6A is running in the ECCS mode, THEN start SI-P-6B, as necessary.

3) IF CBS-P-9A is running in containment spray mode, THEN start CBS-P-9B, as necessary.

h. Align auxiliary equipment:

- Start CC-P-322B, Thermal barrier cooling pump.
- Start SA-C-137B, Sierra air compressor.
- IF SA-C-4A, containment air compressor is running, THEN start SA-C-4B, containment air compressor OR open IA-V530, as necessary.
- IF A PCCW loop Containment structure cooling fans running, THEN start B PCCW loop containment structure cooling fans (maximum five fans):

  CAH-FN-1A
  CAH-FN-1B
  CAH-FN-1D

- Start EAH-FN-5B, Containment enclosure cooling fan.

i. Stop CC-P-322A, Thermal barrier cooling pump.

j. Place the following pump control switches in the PULL TO LOCK position:

- SI-P-6A, SI pump
- RH-P-8A, RHR pump
- CBS-P-9A, Containment spray pump
- CC-P-11A, PCCW pump
- CC-P-11C, PCCW pump
- CS-P-2A, Charging pump
- FW-P-113, SUFP (bus E5)

ATTACHMENT G CONTINUED ON THE NEXT PAGE

ATTACHMENT G

OFFSITE POWER RESTORATION TO BUS E5 AND E6

(ATTACHMENT G high level Step 3 continued)

k. Locally place the DG 1A generator breaker control selector switch in the MAINTENANCE position.

l. Deenergize bus 5 by placing the SEPS Bus 5 breaker in the PULL TO LOCK position.

m. Close the UAT or RAT breaker to the emergency bus 5 while holding the RMO Bypass switch in the bypass position.

n. Locally place the DG 1A generator breaker control selector switch in the REMOTE position, as directed by Unit Supervisor.

o. Start one A Train SW pump:

- SW-P-41A

  - OR -

- SW-P-41C

  - OR -

- SW-P-110A (cooling tower actuation mode)

p. Start one A Train PCCW pump:

- CC-P-11A

  - OR -

- CC-P-11C

q. Align auxiliary equipment:

- Start SA-C-137A, Sierra air compressor.
- IF SA-C-4B, containment air compressor is running, THEN start SA-C-4A, containment air compressor OR open IA-V530.
- IF B PCCW loop Containment structure cooling fans running, THEN start A PCCW loop containment structure cooling fans (maximum five fans):

  CAH-FN-1C
  CAH-FN-1E
  CAH-FN-1F

ATTACHMENT G CONTINUED ON THE NEXT PAGE

ATTACHMENT G

OFFSITE POWER RESTORATION TO BUS E5 AND E6

(ATTACHMENT G high level Step 3 continued)

r. Start the following safeguard pumps, as directed by Unit Supervisor:

1) IF RH-P-8B is running in the ECCS mode, THEN start RH-P-8A, as necessary.
2) IF SI-P-6B is running in the ECCS mode, THEN start SI-P-6A, as necessary.
3) IF CBS-P-9B is running in containment spray mode, THEN start CBS-P-9A, as necessary.

s. Place the following non-operating pump control switches on bus 5 to standby:

- SI pump
- RHR pump
- Containment spray pump
- PCCW pump
- Thermal barrier pump
- Charging pump

t. Shutdown SEPS diesels per ON1061.01, OPERATION OF SEPS.

u. Return to procedure and step in effect.

ATTACHMENT G CONTINUED ON THE NEXT PAGE

ATTACHMENT G

OFFSITE POWER RESTORATION TO BUS E5 AND E6

4 IF emergency bus 6 is powered by SEPS, THEN restore offsite power to emergency bus 6 as follows:

NOTE *If equipment can not be aligned on bus 5, the TSC should be consulted prior to proceeding with actions to restore offsite power to bus 6.*

a. Check both conditions below are satisfied prior to proceeding with Step 4b:

- Check offsite power is available to emergency bus 6.

- AND -

- Check emergency bus 5 is energized by offsite power.

b. Start one Train A SW pump:

- SW-P-41A

  - OR -

- SW-P-41C

  - OR -

- SW-P-110A (cooling tower actuation mode)

c. Start one Train A PCCW pump:

- CC-P-11A

  - OR -

- CC-P-11C

d. Align charging pump valves, as directed by Unit Supervisor:

- IF safety injection lineup is desired, THEN perform the following:
  1) Open CS-LCV-112D, RWST suction valve.
  2) Open SI-V138, Charging pump discharging to Cold Legs.

  - OR -

- IF normal lineup is desired, THEN perform the following:
  1) Open CS-LCV-112B, VCT suction valve.
  2) Open CS-LCV-112C, VCT suction valve.
  3) Open CS-V142, Charging line isolation valve.
  4) Open CS-V143, Charging line isolation valve.

e. Start CS-P-2A, Centrifugal charging pump.

ATTACHMENT G CONTINUED ON THE NEXT PAGE

ATTACHMENT G

OFFSITE POWER RESTORATION TO BUS E5 AND E6

(ATTACHMENT G high level Step 4 continued)

f. IF turbine driven EFW pump is NOT running, THEN start the SUFP on an energized bus per ATTACHMENT H.

g. Start the following safeguard pumps, as directed by Unit Supervisor:

   1) IF RH-P-8B is running in the ECCS mode, THEN start RH-P-8A, as necessary.

   2) IF SI-P-6B is running in the ECCS mode, THEN start SI-P-6A, as necessary.

   3) IF CBS-P-9B is running in containment spray mode, THEN start CBS-P-9A, as necessary.

h. Align auxiliary equipment:

   - Start CC-P-322A, Thermal barrier cooling pump.
   - Start SA-C-137A, Sierra air compressor.
   - IF SA-C-4B, containment air compressor is running, THEN start SA-C-4A, containment air compressor OR open IA-V530.
   - IF B PCCW loop Containment structure fans running, THEN start A PCCW loop containment structure cooling fans (maximum five fans):

     CAH-FN-1C
     CAH-FN-1E
     CAH-FN-1F

   - Start EAH-FN-5A, Containment enclosure cooling fan.

i. Stop CC-P-322B, Thermal barrier cooling pump.

j. Place the following pump control switches in the PULL TO LOCK position:

   - SI-P-6B, SI pump
   - RH-P-8B, RHR pump
   - CBS-P-9B, Containment spray pump
   - CC-P-11B, PCCW pump
   - CC-P-11D, PCCW pump
   - CS-P-2B, Charging pump
   - FW-P-37B, motor driven EFW pump

ATTACHMENT G CONTINUED ON THE NEXT PAGE

ATTACHMENT G

OFFSITE POWER RESTORATION TO BUS E5 AND E6

(ATTACHMENT G high level Step 4 continued)

k. Locally place the DG 1B generator breaker control selector switch in the MAINTENANCE position.

l. Deenergize bus 6 by placing the SEPS Bus 6 breaker in the PULL TO LOCK position.

m. Close the UAT or RAT breaker to the emergency bus 6 while holding the RMO Bypass switch in the bypass position.

n. Locally place the DG 1B generator breaker control selector switch in the REMOTE position, as directed by Unit Supervisor.

o. Start one B Train SW pump:

- SW-P-41B

  - OR -

- SW-P-41D

  - OR -

- SW-P-110B (cooling tower actuation mode)

p. Start one B Train PCCW pump:

- CC-P-11B

  - OR -

- CC-P-11D

q. Align auxiliary equipment:

- Start SA-C-137B, Sierra air compressor.
- IF SA-C-4A, containment air compressor is running, THEN start SA-C-4B, containment air compressor OR open IA-V530.
- IF A PCCW loop Containment structure cooling fans running, THEN start B PCCW loop containment structure cooling fans (maximum five fans):

  CAH-FN-1A
  CAH-FN-1B
  CAH-FN-1D

ATTACHMENT G CONTINUED ON THE NEXT PAGE

ATTACHMENT G

OFFSITE POWER RESTORATION TO BUS E5 AND E6

(ATTACHMENT G high level Step 4 continued)

r. Start the following safeguard pumps, as directed by Unit Supervisor:

1) IF RH-P-8A is running in the ECCS mode, THEN start RH-P-8B, as necessary.
2) IF SI-P-6A is running in the ECCS mode, THEN start SI-P-6B as necessary.
3) IF CBS-P-9A is running in containment spray mode, THEN start CBS-P-9B, as necessary.

s. Place the following non-operating pump control switches on bus 6 to standby:

- SI pump
- RHR pump
- Containment spray pump
- PCCW pump
- Thermal barrier pump
- Charging pump

t. Shutdown SEPS diesels per ON1061.01, OPERATION OF SEPS.

u. Return to procedure and step in effect.

- END -

STEP	ACTION/EXPECTED RESPONSE	RESPONSE NOT OBTAINED

ATTACHMENT H

ESTABLISHING SUFP FLOW

1	**Check power to SUFP and pre-lube pump - AVAILABLE**	Initiate switchover of SUFP breaker to available bus per OS1035.02, STARTUP FEED PUMP OPERATION, as necessary.
2	**Check CST level – GREATER THAN 250,000 gallons**	Dispatch operator to align SUFP suction to CST lower tap isolation valve: a. Open CO-V142, CST lower tap isolation valve. b. Place SUFP suction pressure trip switch (at SUFP) in BYPASS. c. WHEN CO-V142 is open, THEN do step 3.

CAUTION *If additional EFW flow is required, the SUFP can be used on bus E5 if DG A is carrying less than 3600 KW.*

3	**Reset RMO, as necessary**	
4	**Start the SUFP**	
5	**Open FW-V156**	
6	**Throttle open FW-V163 to minimize water hammer AND establish desired flow**	
7	**Open EFW pump mini-flow valves**	
8	**Check CST lower tap isolation valve - OPEN**	Dispatch operator to align SUFP suction to CST lower tap: a. Open CO-V142, CST lower tap isolation valve. b. Place SUFP suction pressure trip switch (at SUFP) in BYPASS.

- END -

ATTACHMENT I

ESTABLISH RCP SUPPORT CONDITIONS

1 **Establish conditions for starting RCP(s):** Try to establish support conditions.

a. 13.8 KV – ENERGIZED

b. PCCW pumps - ONE PUMP RUNNING PER LOOP

c. PCCW containment isolation valves to RCP motors - OPEN

- PCCW loop A valves:
  1) CC-V168
  2) CC-V57
  3) CC-V121
  4) CC-V122
- PCCW loop B valves:
  1) CC-V175
  2) CC-V176
  3) CC-V256
  4) CC-V257

d. One thermal barrier cooling water pump - RUNNING

e. Seal injection – GREATER THAN 6 GPM TO EACH RCP

f. Number 1 seal delta-P – GREATER THAN 220 PSID

g. Pressurizer spray valves - CLOSED

h. Selected RCP lift pump(s) - RUNNING

- END -

ATTACHMENT J

The following conditions support or indicate natural circulation flow:

- RCS subcooling - GREATER THAN 40°F
- SG pressures - STABLE OR DECREASING
- RCS hot leg temperatures - STABLE OR DECREASING
- Core exit TCs - STABLE OR DECREASING
- RCS cold leg temperatures - AT SATURATION TEMPERATURE FOR SG PRESSURE

- END -

A. PURPOSE

The purpose of this procedure is to provide actions to safely shutdown and cooldown the plant from the remote safe shutdown facility due to a fire.

B. SYMPTOMS OR ENTRY CONDITIONS

- The main control room environment becomes uninhabitable due to a fire.
- FIRE HAZARDS ANALYSIS FOR AFFECTED AREA/ZONE - APPENDIX A, RECOMMENDED PROCEDURE.

C. REFERENCES

1. Seabrook Station Fire Protection of Safe Shutdown Capability, 10CFR50, APPENDIX R - (Protected: Entire Procedure)
2. ECA 05/113093B (Protected: Entire Procedure)
3. ISEG Letter #R8608-002, ISEG Recommendations Concerning Inadvertent Rapid Cooldown And Depressurization During A Remote Shutdown Test.

D. EXPIRATION DATE

02/10/08

STEP	ACTION/EXPECTED RESPONSE	RESPONSE NOT OBTAINED

CAUTION
- *E-0 should not be implemented during performance of this procedure.*
- *If a safety injection condition occurs during performance of this procedure, go to E-0, REACTOR TRIP OR SAFETY INJECTION and consult the TSC.*

NOTE *Five Self-Contained Breathing Apparatus (SCBA), mounted to the south wall control room complex, are available for use by operators when control room atmosphere habitability is degraded by smoke.*

1 Establish Remote Safe Shutdown Conditions - PRIOR TO CONTROL ROOM EVACUATION:

a. Manually trip reactor AND verify reactor trip:
- Rod bottom lights - LIT
- Reactor trip and bypass breakers - OPEN
- Neutron flux - DECREASING

a. Perform the following:
- Locally trip the reactor:

RTA - OPEN
RTB - OPEN
BYA - OPEN
BYB - OPEN

- OR -

- Locally trip the rod drive MG sets:
  1) CP-MG-1A Generator output breaker - OPEN
  2) CP-MG-1B Generator output breaker - OPEN

b. Verify turbine trip:

1) All turbine stop valves - CLOSED

1) Manually trip turbine. IF turbine will NOT trip, THEN close MSIVs. WHEN generator output is ZERO MWe, THEN open generator breaker.

2) Generator breaker - OPEN

2) WHEN generator output is ZERO MWe, THEN manually open generator breaker.

Step continued on the next page.

STEP	ACTION/EXPECTED RESPONSE	RESPONSE NOT OBTAINED
	c. Close MSIVs and MSIV bypass valves	c. Close all MSIVs and MSIV bypass valves locally. IF one SG cannot be isolated, AND a cooldown greater than 50°F/HR occurs, THEN allow the affected SG to dryout.
	d. Verify all ASDV mode selector switches are in the closed position	d. Place all ASDV mode selector switches to the closed position.
	e. Close upstream steam drains:	e. Locally close valves: MSD -V44 MSD -V45 MSD -V46 MSD -V47
	f. Trip all RCPs	f. Locally trip RCPs: RCP — Bus RCP-1A — Bus 1 RCP-1B — Bus 1 RCP-1C — Bus 2 RCP-1D — Bus 2
	g. IF control room evacuation is due to a fire, THEN defeat SSPS output: 1) Place SSPS mode selector switches - TEST • Train A • Train B	g. IF control evacuation is due to reasons other than a fire, THEN SSPS will be defeated when cooldown commences. Go to Step 1h. 1) Locally defeat SSPS - OPEN CKT: • EDE-PP-1A CKT #11 • EDE-PP-1B CKT #11
	h. Obtain RSS keys from the security key locker	

Step continued on the next page.

STEP	ACTION/EXPECTED RESPONSE	RESPONSE NOT OBTAINED

i. Announce the following:

- Manning the remote safe shutdown panels for shutdown and cooldown

j. Refer to ER 1.1 Classification of Emergencies:

- EAL 16, Fire
- EAL 17, Control Room evacuation

2 Man The Remote Safe Shutdown Facilities:

Position	Assignment
Shift Manager	Coordinate onsite activities and offsite notifications. (use alternate TSC if necessary)
Unit Supervisor	Coordinate remote safe shutdown activities in the switchgear rooms.
Primary Control Room Operator	Train B, CP-108B remote safe shutdown operator.
BOP Control Room Operator	Train A, CP-108A remote safe shutdown operator.
Secondary RSS Operator - (Work Control Supervisor)	Report to US for assistance in performing local tasks.
Primary RSS Operator	Check emergency diesel generators. IF any diesel generator is running unloaded, THEN stop diesel by performing the following: 1. Place diesel in - LOCAL 2. Stop diesel by - DEPRESSING BOTH EMERGENCY STOP PUSHBUTTONS
Unassigned NSOs	Report to the Unit Supervisor

STEP	ACTION/EXPECTED RESPONSE	RESPONSE NOT OBTAINED

CAUTION • *A selector switch in local, defeats automatic controls, interlocks and removes control and light indication in the control room.*

• *When positioned to local, MS-V395 will open after a time delay with its control switch in the closed position at the RSS panel.*

NOTE • *Replacement control power fuses are available in the CP-108B cabinet for the following equipment:*

EAH-FN-31B, RC-V87, RH-V88, RH-P-8B, SI-V17 and SI-V47

3 Assume Control Of Plant At Remote Safe Shutdown Facilities:

a. Check AC emergency busses – BOTH ENERGIZED

- Bus 6 (Preferred power source)
- Bus 5

a. Perform ATTACHMENT C to restore power to affected emergency buses.

b. Complete remote safe shutdown system lineups:

- Train A:
  1) BOP Control Room Operator performs OS1200.02A Train A
  2) WCS performs CP-108A switch alignment checks, Step 3c.
- Train B
  1) Primary Control Room Operator performs OS1200.02B Train B
  2) US performs CP-108B switch alignment checks, Step 3c.

Step continued on the next page.

STEP	ACTION/EXPECTED RESPONSE	RESPONSE NOT OBTAINED

c. Check remote safe shutdown switch alignment:

CP-108A Switch Lineup - WCS	Position
MS V395 MS TO EFW PUMP	CLOSE
MS V393 SG-A MS TO EFW PUMP	OPEN
MS PV-3001 SG-A ASDV MODE SELECTOR	CLOSE
MS PV-3003 SG-C ASDV MODE SELECTOR	POS MAINT
SW V54 CLG TWR PUMP A DISCH ISO	NORMAL
CP-108B Switch Lineup - US	
MS-V395 MS TO EFW PUMP	CLOSE
MS-V394 SG-B MS TO EFW PUMP	OPEN
MS-PV-3002 SG-B ASDV MODE SELECTOR	CLOSE
MS-PV-3004 SG-D ASDV MODE SELECTOR	POS MAINT
SW-V25 CLG TWR PUMP B DISCH ISO	NORMAL

d. Place ALL selector switches on remote safe shutdown panels - TO LOCAL:

- CP-108A
- CP-108B

e. Control steam generator ASDVs in position maintained – MAINTAIN 1100 PSIG UNTIL COOLDOWN COMMENCES

CP-108A	CP-108B
SG A	SG B
SG C	SG D

d. IF ASDVs can NOT be controlled, THEN locally close ASDV(s).

STEP	ACTION/EXPECTED RESPONSE	RESPONSE NOT OBTAINED
4	**Check Excore Wide Range Neutron Flux:**	
	a. Neutron flux - DECREASING OR STABLE LESS THAN 1.0 E-3% REACTOR POWER CP-108A / CP-108B NI-6690 / NI-6691	a. Borate using a charging pump to RCS cold legs by performing the following: 1) Start at least one boric acid transfer pump: • CS-P-3A at MCC-512 - OR - • CS-P-3B at MCC-612 2) Open CS-V426 at MCC-612. IF valve can NOT be operated, THEN locally open valve. 3) Align charging pump suction to RWST: a) Open RWST suction supply: • CS-LCV-112D at CP-108A - OR - • CS-LCV-112E at CP-108B b) Close VCT suction supply: • CS-LCV-112B at CP-108A - OR - • CS-LCV-112C at CP-108B 4) Open cold leg injection valve: • SI-V138 at CP-108A - OR - • SI-V139 at CP-108B 5) WHEN neutron flux is decreasing, THEN stop boration: • Close SI-V138 • Close SI-V139 • Stop boric acid transfer pumps • Close CS-V426

STEP	ACTION/EXPECTED RESPONSE	RESPONSE NOT OBTAINED
5	**Check PRZ level:**	
	a. PRZ level – GREATER THAN 30% CP-108A: RC-LI-7334, RC-LR-7334 CP-108B: RC-LI-7333, RC-LR-7333	a. Align a charging pump to RCS cold legs by performing the following: 1) Start at least one boric acid transfer pump: • CS-P-3A at MCC-512 - OR - • CS-P-3B at MCC-612 2) Open CS-V426 at MCC-612. IF valve can NOT be operated, THEN locally open valve. Continue efforts to open CS-V426 while continuing with RNO steps below. 3) Align charging pump suction to RWST: a) Open RWST suction supply: • CS-LCV-112D at CP-108A - OR - • CS-LCV-112E at CP-108B b) Close VCT suction supply: • CS-LCV-112B at CP-108A - OR - • CS-LCV-112C at CP-108B 4) Open RCS cold leg injection valve: • SI-V138 at CP-108A - OR - • SI-V139 at CP-108B 5) WHEN PZR level is greater than 80%, THEN stop makeup: • Close SI-V138 • Close SI-V139 • Stop boric acid transfer pumps • Close CS-V426

STEP	ACTION/EXPECTED RESPONSE	RESPONSE NOT OBTAINED

CAUTION *EFW pump mini-flow valves must be open before closing EFW throttle valves.*

6 Check EFW System:

a. Verify EFW flow:

CP-108A	
SG A	FW-FI-4214-5
SG C	FW-FI-4234-5
CP-108B	
SG B	FW-FI-4224-5
SG D	FW-FI-4244-5

a. Perform the following:

1) If necessary, start an EFW pump. Refer to OS1200.02A <u>OR</u> OS1200.02B.

2) Check EFW valve alignment:

CP-108A		
SG A	FW-FV-4214A	- OPEN
SB B	FW-FV-4224A	- OPEN
SG C	FW-FV-4234A	- OPEN
SG D	FW-FV-4244A	- OPEN
CP-108B		
SG A	FW-FV-4214B	- OPEN
SG B	FW-FV-4224B	- OPEN
SG C	FW-FV-4234B	- OPEN
SG D	FW-FV-4244B	- OPEN

If necessary, open valves.

Step continued on the next page.

STEP	ACTION/EXPECTED RESPONSE	RESPONSE NOT OBTAINED
	b. IF either remote safe shutdown panel is NOT in use, perform the following for the NON-USEABLE RSS Train:	b. Locally close valves as necessary.

CP-108A NON-USEABLE
FW-FV-4214B - CP-108B CLOSE FW-FV-4234B - CP-108B CLOSE MS-PV-3001 (SG A) LOCALLY CLOSE MS-PV-3003 (SG C) LOCALLY CLOSE
CP-108B NON-USEABLE
FW-FV-4224A - CP-108A CLOSE FW-FV-4244A - CP-108A CLOSE MS-PV-3002 (SG B) LOCALLY CLOSE MS-PV-3004 (SG D) LOCALLY CLOSE

7 Check SG Pressures:

CP-108A	CP-108B
SG A MS-PI-3173	SG B MS-PI-3174
SG C MS-PI-3178	SG D MS-PI-3179

	a. Control steam generator ASDVs in position maintained – MAINTAIN 1100 PSIG UNTIL COOLDOWN COMMENCES	a. IF remote safe shutdown control is NOT effective, THEN take local control of affected ASDVs.

STEP	ACTION/EXPECTED RESPONSE	RESPONSE NOT OBTAINED

CAUTION *EFW pump mini-flow valves must be open before EFW is throttled.*

8 Check SG Wide Range Level:

CP-108A	CP-108B
SG A LI-4310 FW-LR-4310	SG B LI-4320 FW-LR-4320
SG C LI-4330 FW-LR-4310	SG D LI-4340 FW-LR-4320

a. Control EFW flow control valves to maintain SG wide range level - 65% TO 90%:

CP-108A	
SG A	FW-FV-4214A
SG C	FW-FV-4234A
CP-108B	
SG B	FW-FV-4224B
SG D	FW-FV-4244B

a. Perform the following:

- Use the opposite train remote safe shutdown panel:

CP-108A	
SG B	FW-FV-4224A
SG D	FW-FV-4244A
CP-108B	
SG A	FW-FV-4214B
SG C	FW-FV-4234B

- OR -

- Locally control valves.

STEP	ACTION/EXPECTED RESPONSE	RESPONSE NOT OBTAINED

NOTE • *PCCW temperature control valves fail to MAXIMUM cooling position upon loss of air.*

• *PCCW temperature controllers are initially set with a zero setpoint that corresponds to 100% controller output. This corresponds to a MINIMUM cooling position. INCREASING the setpoint which decreases output INCREASES PCCW cooling flow through the heat exchangers.*

9 Check PCCW Heat Exchanger Outlet Temperature:

CP-108A	CP-108B
Loop A CC-TI-2197	Loop B CC-TI-2297

a. Control PCCW heat exchanger outlet temperature - 65°F TO 75°F

CP-108A	CP-108B
Loop A CC-HIC-2171	Loop B CC-HIC-2271

a. IF PCCW temperature is greater than 75°F, THEN perform the following:

1) Verify SW pump running at associated switchgear.

2) Verify local SW valve alignment for associated train.

10 Verify RCP Thermal Barrier Cooling:

a. Thermal barrier cooling pump - ONE PUMP RUNNING:

• CP-108A - CC-P-322A

- OR -

• CP-108B - CC-P-322B

a. Perform the following:

• IF no pumps running, THEN start one pump.

- OR -

• IF both running, THEN stop one pump.

STEP	ACTION/EXPECTED RESPONSE	RESPONSE NOT OBTAINED
11	**Check RCS Pressure - 2100 PSIG TO 2250 PSIG** CP-108A: RC-PI-7336 CP-108B: RC-PI-7335	Perform the following using the associated remote safe shutdown panel: CP-108A Group A backup heaters A PORV - RC-PCV-456A A PORV Block valve - RC-V122 CP-108B Group B backup heaters B PORV - RC-PCV-456B B PORV Block valve - RC-V124 • IF pressure is low, THEN energize heaters AND verify PORVs OR associated block valve closed. - OR - • IF pressure is high, THEN deenergize heaters AND control PORV and PORV block valve as required. Verify PORV closure. IF PORV does NOT close, THEN close the associated block valve.
12	**Check PZR Level:** CP-108A: RC-LI-7334, RC-LR-7334 CP-108B: RC-LI-7333, RC-LR-7333	
	a. PZR level - 20% TO 80%	a. IF level is less than 20%, THEN go to Step 14. Perform Step 13 when level permits.

STEP	ACTION/EXPECTED RESPONSE	RESPONSE NOT OBTAINED
13	**Sample RCS For Boron Concentration:**	
	a. Align sample valves for loop 1 from CP-108A: 1) Close MCC-522 feeder breaker 2) Unlock and close breaker for loop 1 sample valve: • RC-FV-2894 at MCC-522 3) Align loop 1 RCS sample: • RC-FV-2832 – OPEN • RC-FV-2894 – OPEN 4) Notify Chemistry to sample the RCS for boron concentration	a. Align sample valves for loop 3 from CP-108B: 1) Close MCC-622 feeder breaker 2) Unlock and close breaker for loop 3 sample valve: • RC-FV-2896 at MCC-622 3) Align loop 3 RCS sample: • RC-FV-2833 – OPEN • RC-FV-2896 – OPEN
	b. Record boron concentration Boron PPM _____ Sample Time _____	b. IF sample can NOT be obtained, THEN record last RCS boron concentration: Boron PPM _____
	c. Close RCS sample valves: CP-108A RC-FV-2832 - CLOSE RC-FV-2894 - CLOSE CP-108B RC-FV-2833 - CLOSE RC-FV-2896 - CLOSE	
	d. Open feeder breaker: • CP-108A – MCC-522 • CP-108B – MCC-622	

STEP	ACTION/EXPECTED RESPONSE	RESPONSE NOT OBTAINED

14 Establish Plant Configuration For Reactivity And Inventory Control:

a. Record the Boric Acid Tank Levels:

TANK	INSTRUMENT	RSS CONTROL PANEL
BA-TK-4A	CS-LI-7446	CP-108A
BA-TK-4B	CS-LI-7464	CP-108B

BA TK-4A _____

BA-TK-4B _____

b. Locally isolate RMW to RCS makeup system:

1) Verify open RMW-V31, boric acid blender and charging pump suction isolation AND close RMW-V34 boric acid blender isolation

2) Close RMW-V31, boric acid blender and charging pump suction isolation

3) Close RMW-V36, charging pump suction isolation

c. Locally align the boric acid tank with the highest level to both boric acid transfer pump suctions:

BA-TK-4A	BA-TK-4B
CS-V410 - OPEN	CS-V416 - OPEN
CS-V437 - OPEN	CS-V437 - OPEN
CS-V1207 - OPEN	CS-V1207 - OPEN
CS-V416 - CLOSE	CS-V410 - CLOSE
CS-V431 - CLOSE	CS-V423 - CLOSE

Step continued on the next page.

STEP	ACTION/EXPECTED RESPONSE	RESPONSE NOT OBTAINED
	d. Align charging pump suction to RWST: 1) RWST suction supply - OPEN • CP-108A - CS-LCV-112D - OR - • CP-108B - CS-LCV-112E 2) VCT suction supply - CLOSED • CP-108A - CS-LCV-112B - OR - • CP-108B - CS-LCV-112C	d. Locally open valves. IF RWST can NOT be aligned, THEN refer to ATTACHMENT B for gravity feed lineup. Go to Step 14f.
	e. Align ON-LINE boric acid tank: 1) Start ON-LINE boric acid transfer pump: • CS-P-3A - MCC 512 - OR - • CS-P-3B - MCC-612	1) IF a boric acid transfer pump can NOT be started, THEN align gravity feed per ATTACHMENT B AND go to Step 14f.
	2) Establish boric acid flow: • CS-V426 MCC-612 - OPEN	2) IF valve cannot be operated, THEN open valve locally.
	f. Isolate normal letdown by opening the following circuits: • RC-LCV-459 - PP-122B CKT #17 • RC LCV-460 - PP-122B CKT #1	
	g. Isolate RCS charging header: • CP-108A - CS-V142 CLOSE • CP-108B - CS-V143 CLOSE	

Step continued on the next page.

STEP	ACTION/EXPECTED RESPONSE	RESPONSE NOT OBTAINED
	h. Establish minimum charging flow to RCP seals:	
	1) Charging pump - ONE RUNNING	1) Start one charging pump. If necessary, stop the positive displacement pump.
	2) Locally align alternate charging path and throttle flow as necessary to maintain pressurizer level:	

CS-P-2A	CS-P-2B
CS-V221-THROTTLED OPEN CS-V210-CLOSED	CS-V219-TROTTLED OPEN CS-V220-CLOSED

	i. Isolate excess letdown by opening the following circuits: • CS-V175 - PP-1111B CKT #2 • CS-V176 - PP-1111B CKT #4	i. IF PP-1111B is NOT accessible, THEN close CS-V175 by performing the following: • Place disable switch for CS-V175 on CP-450B in diesel generator room to - DISABLE

STEP	ACTION/EXPECTED RESPONSE	RESPONSE NOT OBTAINED

15 Check Plant Conditions:

a. Pressurizer level - 20% TO 80%

CP-108A	CP-108B
RC-LI-7334	RC-LI-7333
RC-LR-7334	RC-LR-7333

a. Perform the following:

- IF level is high:
  1) Increase steam dump.
  2) Decrease seal injection flow by locally adjusting applicable charging pump flow control bypass valve:

CS-P-2A	CS-P-2B
CS-V221	CS-V219

- OR -

- IF level is low:
  1) Decrease steam dump.
  2) Increase seal injection flow by locally adjusting applicable charging pump flow control bypass valve:

CS-P-2A	CS-P-2B
CS-V221	CS-V219

Step continued on the next page.

STEP	ACTION/EXPECTED RESPONSE	RESPONSE NOT OBTAINED
	b. Check RCS Pressure - 2100 PSIG TO 2250 PSIG CP-108A: RC-PI-7336 CP-108B: RC-PI-7335	b. Perform the following using the associated remote safe shutdown panel: CP-108A Group A backup heaters A PORV - RC-PCV-456A A PORV Block valve - RC-V122 CP-108B Group B backup heaters B PORV - RC-PCV-456B B PORV Block valve - RC-V124 • IF pressure is low, THEN energize heaters AND verify PORVs OR associated block valve closed. - OR - • IF pressure is high, THEN deenergize heaters AND control PORV and PORV block valve as required. Verify PORV closure. IF PORV does NOT close, THEN close the associated block valve.

Step continued on the next page.

STEP	ACTION/EXPECTED RESPONSE	RESPONSE NOT OBTAINED

c. Check SG Wide Range Level:

CP-108A	CP-108B
SG A FW-LI-4310 FW-LR-4310	SG B FW-LI-4320 FW-LR-4320
SG C FW-LI-4330 FW-LR-4310	SG D FW-LI-4340 FW-LR-4320

1) Control EFW flow control valves to maintain SG wide range level – BETWEEN 65% AND 90%:

CP-108A	
SG A	FW-FV-4214A
SG C	FW-FV-4234A
CP-108B	
SG B	FW-FV-4224B
SG D	FW-FV-4244B

1) Perform the following:

- Use the opposite train remote safe shutdown panel:

CP-108A	
SG B	FW-FV-4224A
SG D	FW-FV-4244A
CP-108B	
SG A	FW-FV-4214B
SG C	FW-FV-4234B

- OR -

- Locally control valves.

STEP	ACTION/EXPECTED RESPONSE	RESPONSE NOT OBTAINED
16	**Check HVAC Equipment Operation:**	
	a. Check FIVE containment structure cooling fans - RUNNING	a. Start five available cooling fans. IF fans will NOT start, THEN open PCCW containment isolation valves and start fans.

VALVE	RSS CONTROL PANEL
PCCW LOOP A	
CC-V57	CP-108A
CC-V121	CP-108A
CC-V168	CP-108B
CC-V122	CP-108B
PCCW LOOP B	
CC-V175	CP-108A
CC-V257	CP-108A
CC-V256	CP-108B
CC-V176	CP-108B

Run five fans as necessary to maintain containment habitability.

STEP	ACTION/EXPECTED RESPONSE	RESPONSE NOT OBTAINED

CAUTION • *A boric acid tank volume greater than RE-18 requirement must be injected into the RCS, during cool down, to ensure adequate shut down margin.*

• *Maintain PZR level between 50% to 80%.*

17 Commence RCS Cooldown:

a. Defeat SSPS Train A and Train B output by opening the following circuits:

- A Train SSPS - PP-1A CKT #11
- B Train SSPS - PP-1B CKT #11

b. Maintain RCS subcooling greater than 100°F per ATTACHMENT A, COOLDOWN LIMITATIONS CURVE

c. Adjust SG ASDVs to achieve a cooldown rate - LESS THAN OR EQUAL TO 50°F/HR BY COLD LEG INDICATION:

c. Locally adjust valves for cooldown.

RCS Cold Leg	Temperature Instrument
CP-108A	
LOOP 1	RC-TR-9406 RC-TI-9410
CP-108B	
LOOP 4	RC-TR-9407 RC-TI-9411

d. Maintain all SG pressures - EQUAL DURING COOLDOWN

e. Maintain SG wide range - 65% TO 90%:

e. Adjust EFW flow as necessary.

Step continued on the next page.

STEP	ACTION/EXPECTED RESPONSE	RESPONSE NOT OBTAINED

f. Maintain pressurizer level - 50% TO 80%:

1) Increase level:

- Decrease cooldown rate

- OR -

- Increase seal injection flow by locally adjusting applicable charging pump flow control bypass valve:

CS-P-2A	CS-P-2B
CS-V221	CS-V219

2) Decrease level:

- Increase cooldown rate to 50°F/HR

- OR -

- Decrease seal injection flow by locally adjusting applicable charging pump flow control bypass valve:

CS-P-2A	CS-P-2B
CS-V221	CS-V219

STEP	ACTION/EXPECTED RESPONSE	RESPONSE NOT OBTAINED
	CAUTION *CST makeup should commence as early as possible to avoid low inventory problems late in cooldown.*	
18	**Check CST Inventory:**	
	a. Monitor level: • Local - CO-LIS-4052	a. IF CO-LIS-4052 is NOT available, refer to ATTACHMENT D to determine level. IF CST makeup is required, THEN commence fill from available sources: • DM system • Water treatment • FP system per ATTACHMENT E • CST makeup per OS1016.07, COOLING TOWER PORTABLE MAKEUP PUMP OPERATION

STEP	ACTION/EXPECTED RESPONSE	RESPONSE NOT OBTAINED

CAUTION *A boric acid tank volume greater than RE-18 requirement must be injected into the RCS, during cool down, to ensure adequate shut down margin.*

19 Check Boric Acid Tank Level:

a. Tank level - GREATER THAN 4000 GALLONS

CP-108A	CP-108B
CS-LI-7446	CS-LI-7464

a. IF tank level is low, THEN:

1) Verify charging pump suction aligned from the RWST:

- CP-108A CS-LCV-112D - OPEN

- OR -

- CP-108B CS-LCV-112E - OPEN

2) Stop both boric acid transfer pumps:

- CS-P-3A - MCC 512
- CS-P-3B - MCC 612

3) CLOSE CS-V426 at MCC-612.

IF CS-V426 does NOT close, THEN locally close valve.

4) IF gravity feed to charging pump is in use, THEN locally close the following valves:

- CS-V442
- CS-V439

STEP	ACTION/EXPECTED RESPONSE	RESPONSE NOT OBTAINED
20	**Check RCS Hot Leg Temperature:**	
	a. Hot leg temperature - EQUAL TO or LESS THAN 430°F: CP-108A / CP-108B RC-TI-9406 / RC-TI-9407	a. Continue cooldown to less than 430°F before depressurizing the RCS per Step 21. Maintain less than or equal to 50°F/HR cooldown rate.

STEP	ACTION/EXPECTED RESPONSE	RESPONSE NOT OBTAINED

CAUTION *If pressurizer level increases or oscillates during RCS depressurization, stop the depressurizing AND repressurize RCS to collapse steam void under the reactor vessel head. Allow more time for upper head cooling.*

21 Depressurize RCS - TO 900 PSIG:

a. Open ONE pressurizer block valve and its associated PORV:

- CP-108A - RC-V122 and RC-PCV-456A

  - OR -

- CP-108B - RC-V124 and RC-PCV-456B

b. Close PORV when pressurizer pressure – LESS THAN 900 PSIG

CP-108A	CP-108B
RC-PI-7336	RC-PI-7335

b. IF PORV does NOT close, THEN close its block valve:

- A PORV - RC-V122
- B PORV - RC-V124

Step continued on the next page.

STEP	ACTION/EXPECTED RESPONSE	RESPONSE NOT OBTAINED

c. Maintain pressurizer level - 50% TO 80%:

1) Increase level:

- Decrease cooldown rate

- OR -

- Increase seal injection flow by locally adjusting applicable charging pump flow control bypass valve:

CS-P-2A	CS-P-2B
CS-V221	CS-V219

2) Decrease level:

- Increase cooldown rate to 50°F/HR

- OR -

- Decrease seal injection flow by locally adjusting applicable charging pump flow control bypass valve:

CS-P-2A	CS-P-2B
CS-V221	CS-V219

STEP	ACTION/EXPECTED RESPONSE	RESPONSE NOT OBTAINED

22 Isolate SI Accumulators:

a. Check power to isolation valves - AVAILABLE

1) Close feeder breakers:

- CP-108A - MCC-522
- CP-108B - MCC-622

a. Restore power to isolation valves.

b. Close SI accumulator isolation valves:

Accumulator	Isolation Valve
CP-108A	
SI-TK-9A	SI-V3
SI-TK-9C	SI-V32
CP-108B	
SI-TK-9B	SI-V17
SI-TK-9D	SI-V47

b. IF SI accumulator isolation valve can NOT be closed, THEN locally close the SI accumulator isolation valve. IF containment entry is not possible, THEN vent any unisolated accumulator:

Accumulator	Vent Valves
CP-108A	
SI-TK-9B	SI-V2482
	SI-V2483
SI-TK-9D	SI-V2495
	SI-V2496
CP-108B	
SI-TK-9A	SI-V2475
	SI-V2476
SI-TK-9C	SI-V2477
	SI-V2486

c. Open feeder breakers:

- CP-108A - MCC-522
- CP-108B - MCC-622

STEP	ACTION/EXPECTED RESPONSE	RESPONSE NOT OBTAINED

23 Check Plant Conditions:

a. PZR level - 20% TO 80%

CP-108A	CP-108B
RC-LI-7334 RC-LR-7334	RC-LI-7333 RC-LR-7333

a. Perform the following:

- IF level is high:
  1) Increase steam dump.
  2) Decrease seal injection by locally adjusting applicable charging pump flow control bypass valve:

CS-P-2A	CS-P-2B
CS-V221	CS-V219

- OR -

- IF level is low:
  1) Decrease steam dump.
  2) Increase seal injection flow by locally adjusting applicable charging pump flow control bypass valve:

CS-P-2A	CS-P-2B
CS-V221	CS-V219

b. PZR pressure -LESS THAN 900 PSIG

CP-108A	CP-108B
RC-PI-7336	RC-PI-7335

b. Control PZR heater groups:

CP-108A	CP-108B
Group A	Group B

c. Adjust SG wide range - 80% TO 90%:

- Control EFW flow as necessary

c. Locally adjust EFW flow as necessary.

STEP	ACTION/EXPECTED RESPONSE	RESPONSE NOT OBTAINED
24	**Sample RCS For Boron Concentration:**	
	a. Align sample valves for loop 1 from CP-108A: 1) Close MCC-522 feeder breaker 2) Unlock and close breaker for loop 1 sample valve: • RC-FV-2894 at MCC-522 3) Align loop 1 RCS sample: • RC-FV-2832 – OPEN • RC-FV-2894 – OPEN 4) Notify Chemistry to sample the RCS for boron concentration	a. Align sample valves for loop 3 from CP-108B: a) Close MCC-622 feeder breaker b) Unlock and close breaker for loop 3 sample valve: • RC-FV-2896 at MCC-622 c) Align loop 3 RCS sample: • RC-FV-2833 – OPEN • RC-FV-2896 – OPEN
	b. Record boron concentration Boron PPM _____ Sample Time _____	b. IF sample can NOT be obtained, THEN verify a boric acid tank volume greater than RE-18 requirement is injected into the RCS.
	c. Verify boron sample concentration is greater than RE-18 requirements.	c. Continue RCS makeup from the boric acid tank.
	d. Close RCS sample valves: CP-108A RC-FV-2832 - CLOSE RC-FV-2894 - CLOSE CP-108B RC-FV-2833 - CLOSE RC-FV-2896 - CLOSE	
	e. Open feeder breaker: • CP-108A – MCC-522 • CP-108B – MCC-622	

STEP	ACTION/EXPECTED RESPONSE	RESPONSE NOT OBTAINED
	CAUTION *IF the boric acid tank level is less than 4000 gallons, charging pump suction must be swapped to the RWST.*	
25	**Transfer Charging Pump Suction To RWST When On-Line BAT Level Is LESS THAN 4000 Gallons OR SDM Requirement Is Satisfied:**	Continue to Step 26. WHEN the boric acid tank level is less than 4000 gallons OR SDM requirement is satisfied per RE-18, THEN perform Step 25.
	a. Align RWST suction supply to charging pump: • CP-108A CS-LCV-112D - OPEN - OR - • CP-108B CS-LCV-112E - OPEN	a. Locally open valves.
	b. Stop RCS boration: • Emergency boration flowpath: 1) CS-V426 MCC-612- CLOSE 2) Boric acid transfer pump - OFF • CS-P-3A - MCC-512 • CS-P-3B - MCC-612 - OR - • Gravity feed flowpath: 1) CLOSE CS-V439 2) CLOSE CS-V442	1) Locally close valve.

STEP	ACTION/EXPECTED RESPONSE	RESPONSE NOT OBTAINED
26	**Check RCS Hot Leg Temperature:**	
	a. Hot leg temperature - EQUAL TO or LESS THAN 330°F: CP-108A / CP-108B RC-TI-9406 / RC-TI-9407	a. Continue cooldown to less than 330°F before depressurizing the RCS per Step 27. Maintain less than or equal to 50°F/HR cooldown rate.

STEP	ACTION/EXPECTED RESPONSE	RESPONSE NOT OBTAINED

CAUTION *If PZR level increases or oscillates during RCS depressurization, stop the depressurizing AND repressurize RCS to collapse steam void under the reactor vessel head. Allow more time for upper head cooling.*

27 Depressurize RCS - TO 360 PSIG:

a. Open ONE PZR block valve and its associated PORV:

- CP-108A - RC-V122 and RC-PCV-456A

- OR -

- CP-108B - RC-V124 and RC-PCV-456B

b. Close PORV when PZR pressure - LESS THAN 360 PSIG

CP-108A	CP-108B
RC-PI-7336	RC-PI-7335

b. IF PORV does NOT close, THEN close its block valve:

- A PORV - RC-V122
- B PORV - RC-V124

Step continued on the next page.

STEP	ACTION/EXPECTED RESPONSE	RESPONSE NOT OBTAINED

c. Maintain PZR level - 50% TO 80%:

1) Increase level:

- Decrease cooldown rate

- OR -

- Increase seal injection flow by locally adjusting applicable charging pump flow control bypass valve:

CS-P-2A	CS-P-2B
CS-V221	CS-V219

2) Decrease level:

- Increase cooldown rate to 50°F/HR

- OR -

- Decrease seal injection flow by locally adjusting applicable charging pump flow control bypass valve:

CS-P-2A	CS-P-2B
CS-V221	CS-V219

STEP	ACTION/EXPECTED RESPONSE	RESPONSE NOT OBTAINED
28	**Energize RHR Suction Valves For One RHR Train:**	
	a. Energize RHR suction valves from RCS: • Train A RHR RC-V22 MCC-621 RC-V23 MCC-521 - OR - • Train B RHR RC-V87 MCC-621 RC-V88 MCC-521	a. Perform the following: • IF a valve can NOT be powered, THEN connect temporary power per procedure LS0565.06, TEMPORARY POWER MODIFICATION FOR RHR LOOP ISOLATION VALVES. - OR - • Locally operate valves.

STEP	ACTION/EXPECTED RESPONSE	RESPONSE NOT OBTAINED

CAUTION *SDM should be monitored during initial RHR recirculation to RCS. Each RHR loop contains approximately 3100 gallons.*

29 Place One RHR Train In Operation:

a. Locally sample RHR train for boron concentration:

- A RHR - RH-V8

  - OR -

- B RHR - RH-V44

b. Align RHR flow valves to full flow cooling by opening breaker:

- RHR Train A flow control valves - PP-112A CKT #2

  - OR -

- RHR Train B flow control valves - PP-112B CKT #2

c. Locally align valves for RHR operation:

RHR Train	Valve	Position
A RHR	CBS-V2	CLOSED
	CC-V145	OPEN
	RH-FCV-610	OPEN
	RH-FCV-606	CLOSED
B RHR	CBS-V5	CLOSED
	CC-V272	OPEN
	RH-FCV-611	OPEN
	RH-FCV-607	CLOSED

Step continued on the next page.

STEP	ACTION/EXPECTED RESPONSE	RESPONSE NOT OBTAINED

d. Manually align suction valves for RHR operation:

RHR Train	Valve	Control	Position
A RHR	RC-V22	(CP-108B)	OPEN
	RC-V23	(CP-108A)	OPEN
B RHR	RC-V87	(CP-108B)	OPEN
	RC-V88	(CP-108A)	OPEN

e. Start RHR pump:

- RH-P-8A - BUS E-5

  - OR -

- RH-P-8B - BUS E-6

f. Locally establish RHR flow by slowly opening heat exchanger flow control valve:

- RH-HCV-606

  - OR -

- RH-HCV-607

STEP	ACTION/EXPECTED RESPONSE	RESPONSE NOT OBTAINED
30	**Maintain RCS Conditions:**	
	a. RCS cooldown rate - LESS THAN or EQUAL TO 50°F/HR:	a. Control SG ASDVs and EFW flow to maintain cooldown rate less than 50°F/HR.

RCS Cold Leg	Temperature Instrument
CP-108A RHR Train A LOOP 1	RC-TI-9410
CP-108B RHR Train B LOOP 4	RC-TI-9411

Step continued on the next page.

STEP	ACTION/EXPECTED RESPONSE	RESPONSE NOT OBTAINED
	b. PZR level - 50% TO 80%	b. Perform the following: • IF PZR level is high, THEN decrease seal injection flow by locally adjusting applicable charging pump flow control bypass valve: CS-P-2A / CS-P-2B CS-V221 / CS-V219 - OR - • IF PZR level is high, THEN shut down charging pump. - OR - • IF PZR level is low, THEN increase seal injection flow by locally adjusting applicable charging pump flow control bypass valve: CS-P-2A / CS-P-2B CS-V221 / CS-V219
	c. PZR pressure - LESS THAN or EQUAL TO 360 PSIG	c. USE one PORV to decrease PZR pressure AND maintain 100°F RCS subcooling requirement per ATTACHMENT A, COOLDOWN LIMITATIONS CURVE.
31	**Check SDM - ADEQUATE** a. Sample RHR locally b. Coordinate with reactor engineering to ensure adequate SDM is maintained during remainder of cooldown	Maintain current RCS temperature until SDM is adequate.

STEP	ACTION/EXPECTED RESPONSE	RESPONSE NOT OBTAINED
32	**Continue RCS Cooldown To Less Than 200°F With The RHR System**	
	CAUTION *Depressurizing the RCS before the entire RCS is below 200°F may result in void formation in the system. When on RHR, the coolant loops and SGs remain hot unless EFW flow and atmospheric venting continues.*	
33	**Check CST Inventory:**	
	a. IF CST inventory is adequate, continue EFW feed and SG steam venting to cooldown inactive portions of the RCS	a. IF CST inventory is low, stop the EFW pump AND stop dumping steam until CST inventory is adequate. Continue efforts to makeup to CST: • DM system • Water treatment • FP system per ATTACHMENT E • CST makeup per OS1016.07, COOLING TOWER PORTABLE MAKEUP PUMP OPERATION
	b. Do NOT continue until CST inventory is adequate	
34	**Continue Cooldown Of Inactive Portions Of RCS:**	
	a. Dump steam to atmosphere from all steam generators	
	b. Maintain steam generator level - 85% TO 90%	
	c. Cooldown rate - LESS THAN or EQUAL TO 50°F/HR	
	d. PZR level - 50% TO 80%	d. IF PZR level is high, THEN shut down charging pump.

STEP	ACTION/EXPECTED RESPONSE	RESPONSE NOT OBTAINED
35	**Check RCS Temperatures:**	
	a. Hot leg temperature in running RHR loop - LESS THAN 200°F CP-108A / CP-108B RC-TI-9406 / RC-TI-9407	a. Continue cooldown.
	b. Do NOT continue until all temperatures - LESS THAN 200°F	
36	**Maintain Cold Shutdown Conditions:**	
	a. All SGs have stopped steaming	a. Continue cooldown. Maintain level between 85% and 90%.
	b. Maintain RHR operation with a pressurizer steam bubble - LESS THAN 360 PSIG	
	c. Maintain pressurizer level - 50% TO 80%	
	d. Stop RCS makeup:	
	1) Stop running charging pump	
37	**Check Main Control Room Conditions - NORMAL**	Return to Step 36.
38	**Return Control From Each Remote Safe Shutdown Facility Back To The Main Control Room:**	
	a. Go to OX1400.02, REMOTE SAFE SHUTDOWN 18 MONTH OPERATING CHECK	

- END -

ATTACHMENT A

COOLDOWN LIMITATIONS CURVE

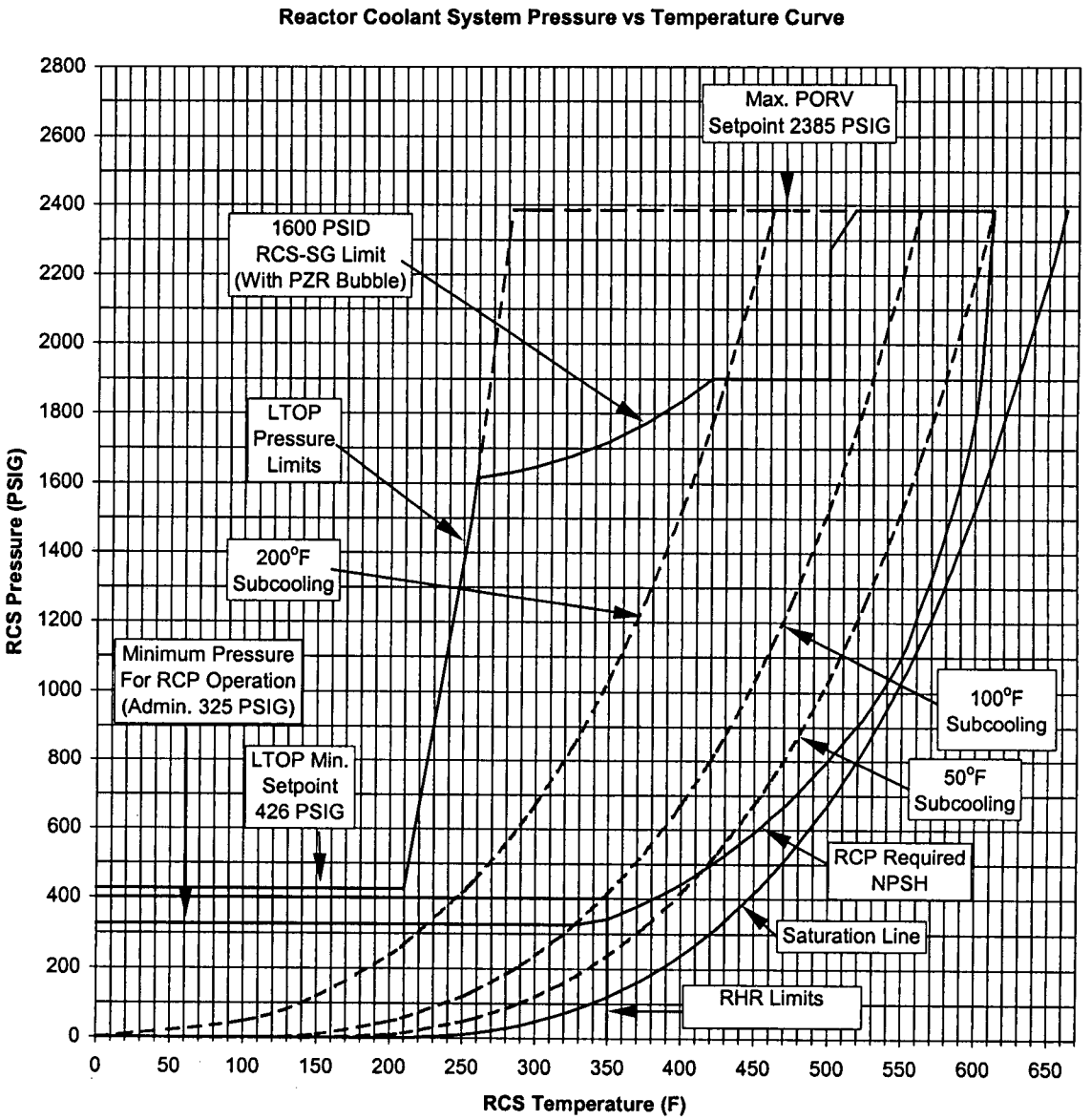

ATTACHMENT B

BORIC ACID TANK GRAVITY FEED LINEUP

1. Align charging pump suction to the RWST:

   a. Open RWST suction supply valves:

   - CS-LCV-112D - OPEN

     OR

   - CS-LCV-112E - OPEN

   b. Close VCT suction supply valves:

   - CS-LCV-112B

     OR

   - CS-LCV-112C

   NOTE *To align BOTH boric acid tanks at the same time, open all the valves listed. This will cross connect both tanks.*

2. Manually align a Boric Acid Tank for gravity feed to the charging pump suction:

BA TANK 4A		BA TANK 4B	
VALVE NUMBER	POSITION	VALVE NUMBER	POSITION
CS-V1207	CLOSED	CS-V437	CLOSED
CS-V410	OPEN	CS-V416	OPEN
CS-V437	OPEN	CS-V439	OPEN
CS-V439	OPEN	CS-V442	OPEN
CS-V442	OPEN	CS-V1207	OPEN

3. Adjust AND maintain charging flowrate - LESS THAN 120 GPM

4. Isolate RWST suction path - CLOSE VALVES

   - CS-LCV-112D
   - CS-LCV-112E

ATTACHMENT C

LOCAL RESTORATION OF EMERGENCY POWER

CAUTION • *With the diesel generator in LOCAL control, the diesel will auto start but the diesel generator breaker must be manually closed to initiate load sequencing.*

NOTE • *The maximum continuous load for the diesel generator is 6083 KW.*

1. Verify the affected emergency bus is deenergized prior to proceeding with this attachment.
2. Align switches to restore power to the deenergized emergency bus:
   a. At the local DG control panel, place the following switches to LOCAL position:
      - Generator breaker control selector
      - UAT breaker control selector
      - RAT breaker control selector

   b. At the local DG control panel, check the following breakers in OPEN position. IF NOT, THEN open breaker(s):
      - Generator breaker
      - UAT breaker
      - RAT breaker

   c. At the associated AC emergency bus, place the following pump selector switches to LOCAL:
      - SW pumps
      - RHR pump
      - PCCW pumps
      - Charging pump
      - EFW pump (bus 6)
      - Cooling Tower pump
3. At the local DG control panel, depress the diesel emergency start button. WHEN diesel generator is at rated speed, frequency and voltage, THEN locally close the diesel generator breaker.
4. At the associated AC emergency bus, start pumps as follows:
   a. Start one SW pump.
   b. IF no charging pump is running, THEN start one charging pump.
   c. Start one PCCW pump.
5. Check diesel support conditions:
   a. Check service water cooling local DG alarm – RESET
   b. Check diesel generator room ventilation -NORMAL
   c. Check generator parameters - NORMAL

- END -

ATTACHMENT D

CST LEVEL VS EFW PUMP SUCTION PRESSURE

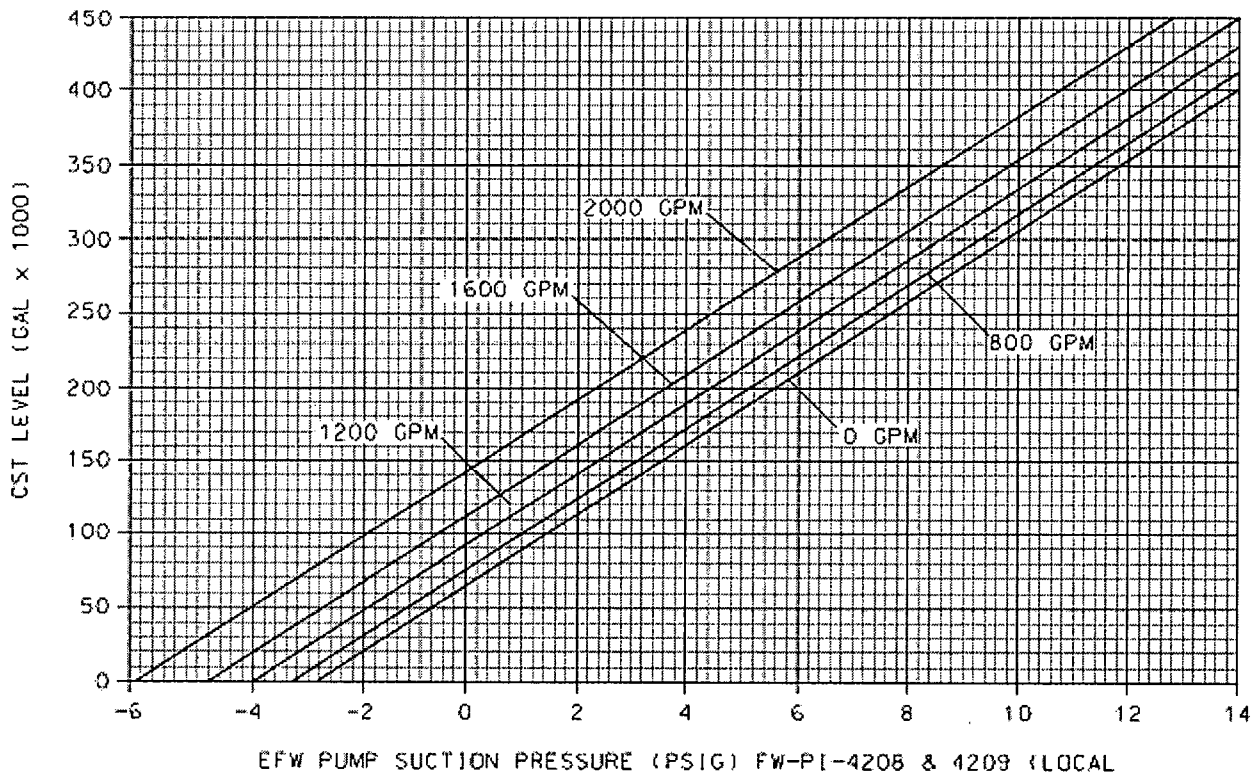

1. Flow values for the graph are based on TOTAL suction flow. This value includes pump recirc flow.

2. IF the turbine driven pump is the only pump running, THEN perform the following:

   a. Use FW-PI-4208, turbine driven EFW pump suction pressure as TOTAL SUCTION PRESSURE.

   b. Use FW-FI-4214, FW-FI-4224, FW-FI-4234, and FW-FI-4244 actual EFW TOTAL flow from the RSS panels, double that value to determine the gpm flow line on the graph.

3. IF the motor driven pump is the only EFW pump running, THEN perform the following:

   a. Use FW-PI-4209, motor driven EFW pump suction pressure as TOTAL SUCTION PRESSURE.

   b. Use FW-FI-4214, FW-FI-4224, FW-FI-4234, and FW-FI-4244 actual EFW TOTAL flow from the RSS panels, double that value to determine the gpm flow line on the graph.

ATTACHMENT E

CST EMERGENCY MAKEUP FROM FP SYSTEM

NOTE *All materials required for this task are stored in the emergency CST makeup box.*

1. Check closed CO-V146, Suction Header to Alternate Fuel Pool Makeup Isolation.

2. Remove blank flange at CO-V146 AND install flange hose adapter with flexitallic gasket (CID #54960201 located in box).

3. Install emergency makeup hose at EFW pump room hose station:

   a. Remove 1 ½" fire hose and 2 ½" to 1 ½" reducer from FP-V483, Hose Station #71 isolation.

   b. Install "Y" adapter at FP-V483, Hose Station #71 isolation.

   c. Install 1 ½" fire hose and 2 ½" to 1 ½" reducer at "Y" adapter outlet.

   d. Install emergency makeup hose (2 1/2") at "Y" adapter outlet.

4. Install the emergency makeup hose (2 1/2") to the flange at CO-V146.

5. Initiate CST fill from FP system:

   a. Open "Y" adapter outlet valve to emergency makeup hose (2 1/2").

   b. Open FP-V483, Hose Station #71 Isolation.

   c. Open CO-V146, Suction Header to Alternate Fuel Pool Makeup Isolation.

6. WHEN CST fill is complete, THEN close CO-V146

- END -

A. PURPOSE

This procedure provides actions to stabilize plant conditions due to a loss of a vital DC bus.

B. SYMPTOMS OR ENTRY CONDITIONS

- Computer VAS alarms:

  D6094 DC BUS 11A VOLT LO-LO

  D6096 DC BUS 11B VOLT LO-LO

  D6095 DC BUS 11C VOLT LO-LO

  D6097 DC BUS 11D VOLT LO-LO

  D6336 BUS E5 DC CONTROL POWER LOSS

  D6359 BUS E6 DC CONTROL POWER LOSS

- Zero voltage indicated on DC bus voltmeters.
- Loss of normal feedwater control.
- Hardwire alarms:

  UA-54: DC BUS 11A VOLTS LO / DC BUS 11C VOLTS LO
  UA-55: DC BUS 11B VOLTS LO / DC BUS 11D VOLTS LO

C. REFERENCES

1. OES R8405-021, Recommendations Concerning Loss of DC Power Supplies (SOER 81-15) (Entire Procedure)
2. IE Bulletin 79-27 (Entire Procedure)
3. Safety Evaluation Report, March 1983, Section 7.5.2.5 (Entire Procedure)

D. EXPIRATION DATE

03/16/08

STEP	ACTION/EXPECTED RESPONSE	RESPONSE NOT OBTAINED

CAUTION *Loss of DC bus 11A or 11B will result in the loss of the following functions:*

Loss of normal feedwater control
Loss of emergency diesel generator starting capability
Loss of safeguard equipment actuation on an ESFAS signal

1 Check Feedwater Status:

- Steam flow/feed flow signals - MATCHED
- SG narrow range levels - 45% TO 55%

Take manual control of SG feedwater control. IF feedwater control is not available, THEN trip the reactor and go to E-0, REACTOR TRIP or SAFETY INJECTION, Step 1.

2 Send An Operator To DC Switchgear To Perform The Following While Continuing With This Procedure:

a. Check DC breaker and alarm status:

- DC bus
- DC battery charger

b. Energize affected DC bus by performing the following:

- OS1048.13, VITAL BUS 11A OPERATION

  - OR -

- OS1048.14, VITAL BUS 11B OPERATION

  - OR -

- OS1048.15, VITAL BUS 11C OPERATION

  - OR -

- OS1048.16, VITAL BUS 11D OPERATION

STEP	ACTION/EXPECTED RESPONSE	RESPONSE NOT OBTAINED
3	**Monitor Plant Conditions:** a. Charging - IN SERVICE • Seal injection - 8 TO 13 GPM b. Letdown - IN SERVICE • Normal letdown - OR - • Excess letdown c. PZR pressure - 2205 to 2265 PSIG d. SG narrow range levels - 45% TO 55% e. PCCW system: 1) Flow - GREATER THAN 6000 GPM PER LOOP 2) Temperature: • Train A - 80°F TO 85°F • Train B - 65°F TO 78°F	Take manual control and align systems as necessary.
4	**Verify Technical Specification Compliance:** • T.S. 3.8.2.1., D.C. Sources, Operating • T.S. 3.8.2.2., D.C. Sources, Shutdown • T.S. 3.8.3.1., Onsite Power Distribution, Operating • T.S. 3.8.3.2., Onsite Power Distribution, Shutdown - END -	

SEABROOK STATION

Operations Procedure

Refueling Operation

OS1000.09

Rev. 07 Chg. 03

Level of Use
General

Procedure Owner:
AOM Support
System: MPE

TABLE OF CONTENTS

1. PURPOSE 3

2. PREREQUISITES 4

3. PRECAUTIONS 9

4. INSTRUCTIONS 12

4.1 Entering MODE 6 from MODE 5 in Preparation for Refueling 12

4.2 Performing CORE ALTERATIONS During Refueling 18

4.3 Entering MODE 6 from a Defueled Condition 22

4.4 Termination of Refueling and MODE 5 Entry 26

4.5 Final Conditions 31

5. REFERENCES 32

6. SUMMARY OF CHANGES 34

FIGURES AND FORMS

Figure 1: Limitations and Setpoints 37

Figure 2: Recommended Notifications and Actions for Foreign Objects Dropped in the Refueling Cavity or Spent Fuel Pit 38

Figure 3: Shutdown and Refueling Related Definitions 39

Figure 4: Monitoring RCS Inventory When in MODEs 5 or 6 40

Figure 5: Core Offload Completion Times Vs. Service Water Temp 42

Figure 6: SFP Temperature Vs. Time After Shutdown As A Function Of Cooling Tower Basin Temperature 43

Figure 7: Refueling Cavity Elevations 44

1. PURPOSE

1.1 Objective

The objective of this procedure is to provide a method for:

1.1.1 Entering MODE 6 from MODE 5 in preparation for refueling.

1.1.2 Performing CORE ALTERATIONS during refueling.

1.1.3 Entering MODE 6 from a defueled condition.

1.1.4 Termination of refueling and MODE 5 entry.

1.2 Applicability

1.2.1 The plant is in MODE 5 with RCS temperature between 68 and 140°F.

2. PREREQUISITES

2.1 Initial Conditions

_____/_____ 2.1.1 The plant is in MODE 5 with RCS temperature between 68 and 140°F. (Section 4.1)

2.2 General

_____/_____ 2.2.1 Verify an RWP for refueling evolutions has been issued.

> **NOTE**
>
> Cavity drain line flush connections were installed per DCR 99-0030. Verification of the flush connection pipe caps installed should be detailed on the SM Clearance Section for isolating the refueling pool canal drains.

2.2.2 Isolate the refueling pool and refueling canal drains as follows: (Ref. 5.18)

_____/_____ 2.2.2.1 Remove maintaining device, close and tag to SM the following valves:

SF-V-80, upper internals storage area drain

SF-V-81. portable filter pump suction

SF-V-83, lower internals storage area drain

SF-V-84, upender area drain

_____/_____ 2.2.2.2 Verify the blind flange is installed at SF-V-81, portable filter pump suction per 1-SF-V81-M11A, Installation of blind flange at SF-V-81.

_____/_____ 2.2.2.3 Verify pipe caps INSTALLED and TAGGED on the following refueling cavity drain flush connections:

- 1-SF-1750-03-DRN-CAP
- 1-SF-1749-02-DRN-CAP
- 1-SF-1746-03-DRN-CAP
- 1-SF-1751-03-DRN-CAP

_____/_____2.2.3 The following computer alarm points are on SCAN:

D5198 SPENT FUEL POOL LEVEL LOW

D5763 CONTM SUMP B LEVEL HIGH

D5762 CONTM SUMP A LEVEL HIGH

_____/_____2.2.4 Both RHR loops are OPERABLE and at least one RHR loop is RUNNING. (MODE 6 unless the water level in the reactor cavity is greater than or equal to 23 feet **and** the reactor vessel upper internals are removed).

_____/_____2.2.5 Both source range NIs are operable and in operation, including the Control Room and containment audible indications. (MODE 6)

_____/_____2.2.6 ODI.82K, MODE 5 to 6 MODE Change Checklist, has been completed. (Section 4.1)

_____/_____2.2.7 DELETED DIGITAL POINT SUMMARY has been reviewed and any refueling VAS alarms which were deleted for at power operation have been restored.

_____/_____2.2.8 The polar crane drip pans have been removed and properly stored in containment.

NOTE

The required boron concentration is determined by Reactor Engineering in accordance with RX 1712.

_____/_____2.2.9 The RCS is borated to the required concentration as determined by Reactor Engineering.

_____/_____2.2.10 If the OCC has determined that crediting the gap between the reactor vessel flange and head to meet the RCS overpressure protection is desired, ensure Maintenance is prepared to perform gap measurements when performing MS0504.08, Reactor Head Studs Detensioning And Removal. (Section 4.1)

_____/_____2.2.11 Contact the Outage Manager and identify RCS or S/G temperature requirements for sludge lancing. Maintain the RCS per the contracted agreement and at all times within the 68 to 140 degree band.

_____/_____2.2.12 If conditions permit, a hearing protection exemption for fuel handlers has been obtained. (Safety must evaluate fuel handling noise levels before granting this exemption).

_____/_____2.2.13 The following procedures the been REVIEWED with the operating shift and maintenance personnel prior to moving the reactor vessel upper internals: (Ref. 5.18) (Section 4.1, 4.4)

- OS1215.05, Loss of Refueling Cavity Water
- MS0504.11, Reactor Vessel Upper Internals Assembly Removal and Storage, as applicable.
- MS0504.15, Reactor Vessel Upper Internals Assembly Installation, as applicable.

NOTE

The Refueling Purge Mode of Operation will provide 40,000 cfm of air flow to containment versus 10,000 cfm from Pre-Entry Purge. The Refueling Purge Mode should be used to maximize containment cooling.

_____/_____2.2.14 The CAP system is in service as desired per OS1023.68.

_____/_____2.2.15 In addition to the Refueling Tech. Specs. and Tech. Requirements, the following are applicable in MODE 6, and have been reviewed to verify compliance:

TR29-3.1.2.1,	Boration Systems - Flowpaths Shutdown
TR29-3.1.2.3,	Boration Systems - Charging Pump Shutdown
TR29-3.1.2.5,	Boration Systems - Borated Water Sources Shutdown
TS 3.1.2.7,	Boron Systems - Isolation of Unborated Water Sources Shutdown
TS 3.3.3.1,	Monitoring Instrumentation - Radiation Monitoring for Plant Operations
ODCM/TRP 5.2 C.5.2,	Radioactive Gaseous Effluent Monitoring Instrumentation
TS 3.4.10,	Structural Integrity
TS 3.5.3.2	ECCS Subsystems – T_{avg} Equal To Or Less Than 200°F.
TS 3.7.6.1	Control Room Subsystems – Emergency Makeup Air And Filtration
TS 3.7.6.2	Control Room Subsystems – Air Conditioning
TS 3.7.7,	Snubbers
TR24-3.7.10,	Area Temperature Monitoring
TS 3.8.1.2,	A.C. Sources - Shutdown
TS 3.8.2.2,	D.C. Sources - Shutdown
TS 3.8.3.2,	Onsite Power Distribution
TS 3.8.3.3,	Onsite Power Distribution-Trip Circuit for Inverter I-2A
TS 3.8.4.2,	Electrical Equipment Protective Devices
TS 3.8.4.3,	Electrical Equipment Protective Devices

_____/_____2.2.16 The Refueling Machine Auxiliary Hoist preoperational checks have been completed using IX1641.903 within 100 hours prior to the start of CRDS unlatching. (Section 4.1)

_____/_____2.2.17 IF CAP or COP is to be in service during CORE ALTERATIONS, then the Containment Purge and Exhaust Isolation System is required to be OPERABLE and SSPS must be in OPERATE. (Section 4.2, 4.3, 4.4)

_____/_____2.2.18 Verify Complete/Complete OX1423.24 and OX1423.26, including remote position indication or VERIFY affected COP, CAP, and CAH penetrations meet the requirements of TS 3.9.4. (Section 4.2)

_____/_____2.2.19 If the containment purge and exhaust isolation system is needed for CAP or COP, then OX1423.13 has been performed within 10 days prior to the start of CORE ALTERATIONS. (PM Number 1-FAH-OT004-000)

_____/_____2.2.20 EX1808.015, Fuel Storage Building Emergency Air Cleaning System 18 Month Surveillance, has been performed within the preceding 18 months and will remain current through refueling activities. (Section 4.2 and 4.3) (Ref. 5.17)

NOTE

The fuel air handling system will be left in the Fuel Handling Mode following refueling operations to prevent exceeding plant vent dose projection due to the increase of Iodine. Chemistry will direct when the fuel air handling system can be realigned to normal mode based on sample results and dose projections. (CR 02-10806)

_____/_____2.2.21 The FSB ventilation system is in the FUEL HANDLING MODE per OS1023.63. (Section 4.2, 4.3) (Ref. 5.16)

_____/_____ 2.2.21.1 HANG Shift Manager caution tags on Train A and Train B Fuel Handling Mode Control Switch to indicate that FAH **shall not** be realigned to normal until chemistry approval is obtained. (CR 02-10808)

_____/_____2.2.22 OX1415.03, Refueling Containment Integrity Weekly Verification has been completed within 100 hours prior to the start of CORE ALTERATIONS. (Section 4.2, 4.3, 4.4)

_____/_____2.2.23 The following procedures the been REVIEWED with the operating shift and refueling shift personnel: (Ref. 5.18) (Section 4.2, 4.3)

- OS1215.05, Loss of Refueling Cavity Water
- OS1215.06, Fuel Handling Accident
- OS1215.07, Loss of SFP Cooling or Level
- Precautions, Limitations and Setpoints of this procedure, OS1000.09.

_____/_____2.2.24 OX1415.04 has been completed as necessary within 7 days prior to crane use. (Section 4.2, 4.3)

_____/_____2.2.25 IX1641.903 has been completed within 100 hours prior to the start of CORE ALTERATIONS. (Section 4.2, 4.3, 4.4)

_____/_____2.2.26 The spent fuel pool and fuel transfer area (in FSB) are filled to a level at least 23 feet above the top of fuel racks in the SFP. (Section 4.2, 4.3)

_____/_____2.2.27 Notify the Security Shift Supervisor (SSS) prior to moving fuel. (Section 4.2, 4.3)

_____/_____2.2.28 ODI.82O, Defueled to MODE 6 Mode Change Checklist, has been completed. (Section 4.3)

3. PRECAUTIONS

3.1 Care must be exercised in monitoring for radiation and contamination hazards in the handling of tools and equipment withdrawn from the refueling water.

3.2 Underwater refueling lights must **not** be energized unless submerged in water.

3.3 Avoid prolonged exposure to the underside of the reactor vessel closure head.

3.4 All mechanisms operated over the reactor vessel, transfer canal, and spent fuel pit must have small tools and loose parts secured to prevent their loss inside the vessel, transfer canal or spent fuel pit. This includes personal property such as glasses. (Ref. 5.23)

3.5 Refer to Figure 2 for recommended notifications and actions for foreign objects dropped into the refueling cavity or spent fuel pit.

3.6 CORE ALTERATIONS shall be directly supervised by a licensed Senior Reactor Operator who has **no** other concurrent responsibilities during the operation.

3.7 Any system which might cause a boron dilution will be **either** isolated **or** closely monitored during operation.

3.8 If an unexpected increase or decrease in count rate occurs on one or more neutron flux monitors, CORE ALTERATION will be suspended until the reason has been determined and evaluated. If CORE ALTERATIONS have been suspended due to an unexplained increase in subcritical multiplication, approval of the Operations Manager (no designee) is required to resume refueling. In the absence of the Operations Manager the Plant Manager shall approved resumption of refueling.

3.9 Suspension of CORE ALTERATIONS shall **not** preclude completion of movement of a component to a safe conservative position.

3.10 During all lifting operations, load cells or spring scales are to be monitored for abrupt changes which would indicate binding.

3.11 The movement of spent fuel within the spent fuel pool is prohibited whenever the cask pit and fuel transfer area (in the FSB) are dewatered. (Ref. 5.18)

3.12 Both of the following conditions are required prior to removing the fuel transfer tube blind flange: (Ref. 5.18)

1) Fuel transfer valve is CLOSED.

-AND-

2) The SFP gate is CLOSED. With the concurrence of the Operations Manager, the gate may be open for short durations if continuously manned.

3.13 One of the following conditions is required prior to opening the fuel transfer valve: (Ref. 5.18)

1) The fuel transfer tube blind flange on the containment end of the transfer tube is secured in place.

-OR-

2) The fuel transfer canal and refueling cavity are at the spent fuel pool level.

3.14 Whenever the fuel transfer tube gate valve is opened and the fuel transfer tube blind flange is removed, an operator must be stationed at the valve. (Ref. 5.18)

3.15 With an SI pump available per the provisions of T.S. 3.5.3.2, the incore thimble low pressure seals must **not** be installed with the reactor vessel head tensioned. (Ref. 5.22)

3.16 The bounding limit for Reactor Cavity Seal failure results in a cavity level decrease of 2 inches per minute with the refueling transfer valve closed and 1 inch per minute with it open. During movement of Upper and Lower Internals, there should be enough time to lower the component back into the vessel or to its respective storage stand. (Ref. 5.18)

3.17 Caution should be used when moving lights, cameras etc., in the area of the RHR hot leg suctions with RHR running as the equipment could be drawn into the loops.

3.18 Figure 4 can be referred to for monitoring RCS inventory when in MODEs 5 and 6.

3.19 The fuel air handling system will be left in the Fuel Handling Mode following refueling operations to prevent exceeding plant vent dose projections due to the increase of Iodine. Chemistry will direct when the fuel air handling system can be realigned to normal mode based on sample results and dose projections. (CR 02-10806)

3.20 The design basis temperature for the Spent Fuel Pool is 140°F. Due to diver's inspections in the SW fore bay, in most refueling outages, the cooling tower is in service during the core offload. Both ocean SW trains are tagged out.

Figure 5 shows the SW temperature required to maintain 140°F in the SFP with a full core offload vs. time after shutdown. Figure 6 shows spent fuel pool temperature vs. time after shutdown for various cooling tower temperatures. In both cases, the following was assumed.

- The core is fully offloaded.
- The spent fuel pool is full.
- Conservatism is built in due to normal design basis heat load assumptions and heat exchanger fouling assumptions.

Because of the Conservatism, the best estimate based on past experience, prior to the Stretch Power Uprate, is SFP temperatures will be about 20°F lower than shown in Figure 6 for a given cooling tower temperature.

To ensure we do not exceed SFP design basis temperature, the following precautions on SW will be taken:

- Both trains of SW may be tagged out for the diver's inspection, but the "protected train" SW will be tagged out for diver's inspection only. No other work will be allowed on that train, including no diver maintenance.
- If SFP temperature can not be maintained < 115°F, the WCS will have the divers removed, clear the tags on the protected SW train, and give control of the SW train to the Control Room for startup. It is expected the maximum time to accomplish this is 30 to 40 minutes. (Ref. 5.24 and 5.25)

3.21 If the core must be offloaded for reasons other than a normal refueling, it can not be started prior to 120 hours after shutdown. (Ref. 5.26)

3.22 While in MODE 6, an SI pump flowpath from the RWST to the RCS may be used as an alternate boron injection flowpath as long as the RWST is operable and the SI pump can be powered from an emergency power source.

3.23 In MODE 6 with the vessel upper internals installed, two trains of RHR **must** remain operable. With the upper internals installed, the water volume contained in the reactor cavity is unavailable for core cooling. (Refer to T.S. Bases for T.S. 3.9.8.1) (Protected: Ref.: 5.27)

3.24 Prior to changing MODEs the MPCS MODE Determination should be verified in AUTO. Failure to do so may result in suppression of required alarms for the correct MODE.

4. INSTRUCTIONS

4.1 Entering MODE 6 from MODE 5 in Preparation for Refueling

4.1.1 VERIFY completion of the following maintenance activities in preparation for reactor vessel head removal:

_____/_____ 4.1.1.1 The following Work Order have been completed:

- 1-RE-RCSP-REMV-M11B-000
- 1-RE-RFSP-REMV-M11B-000
- 1-RE-RVLS-REMV-M11B-000

_____/_____ 4.1.1.2 MS0504.06, Reactor Head Insulation Removal and Storage

_____/_____ 4.1.2 VERIFY the reactor cavity seal ring access hatch covers are installed per PM # 1-FH-RE-18-M11A-000.

_____/_____ 4.1.3 INSTALL refueling cavity underwater lighting.

_____/_____ 4.1.4 DRAIN the RCS to a level of minus 6 to minus 32 inches in accordance with OS1001.02.

4.1.5 REMOVE the fuel transfer tube blind flange by performing the following: (Ref. 5.18)

_____/_____ 4.1.5.1 VERIFY the fuel transfer tube gate valve is CLOSED.

_____/_____ 4.1.5.2 VERIFY the spent fuel pool gate is CLOSED.

_____/_____ 4.1.5.3 NOTIFY Maintenance to remove the fuel transfer tube blind flange per MS0535.05.

C A U T I O N

In MODE 6 with the vessel upper internals installed, two trains of RHR **must** remain operable. With the upper internals installed, the water volume contained in the reactor cavity is unavailable for core cooling. (Refer to T.S. Bases for T.S. 3.9.8.1) (Protected: Ref. 5.27)

_____/_____ 4.1.6 VERIFY both RHR trains OPERABLE.

CAUTION

If an SI pump is made available per the provisions and restrictions of T.S. 3.5.3.2, retracting of the incore thimbles and installation of the incore thimble low pressure seals must **not** take place until the reactor vessel head is completely detensioned. (Ref. 5.24)

NOTE

The RCS temperature range for reactor vessel head stud detensioning is 68°F to 140°F.

4.1.7 DETENSION the reactor vessel head studs by performing the following:

4.1.7.1 IF crediting the gap between the reactor vessel flange and head as a means of RCS overpressure protection is desired, THEN perform the following:

_____/_____ 4.1.7.1.1 NOTIFY Maintenance that an AS FOUND gap measurement must be taken BEFORE detensioning starts and an AS LEFT gap measurement must be taken when detensioning is completed.

_____/_____ 4.1.7.1.2 CONFIRM that the difference between AS FOUND and AS LEFT gap measurements was at least 0.125 inches.

_____/_____ 4.1.7.1.3 IF the difference between AS FOUND and AS LEFT gap measurement was less than 0.125 inches, THEN NOTIFY OCC Engineering to determine if the measured gap is acceptable.

_____/_____ 4.1.7.2 RECORD MODE 6 entry with detensioning of the first stud.

_____/_____ 4.1.7.3 Manually SELECT MODE 6 monitoring on the MPCS Management screen.

_____/_____ 4.1.7.4 VERIFY current MODE using MODE/EVENT screen.

_____/_____ 4.1.7.5 VERIFY that the reactor vessel head studs are completely detensioned per MS0504.08. This provides a reactor vessel vent path prior to retracting incore thimbles. (Ref. 5.24)

_____/_____ 4.1.7.6 NOTIFY I&C to retract the incore thimbles per IS1690.815, Fixed Incore Instrumentation Thimble Withdrawal.

4.1.8 REMOVE the reactor vessel head by performing the following:

NOTE

The intent of step 4.1.8.1 can be satisfied by different methods such as:

1. OX1415.03 is being maintained by the Control Room.

OR

2. OS1056.03 – Containment Penetrations is being maintained by the Control Room and any open penetrations are capable of being closed prior to the initiation of core boiling.

_____/_____ 4.1.8.1 ESTABLISH and MAINTAIN control of containment penetrations.

_____/_____ 4.1.8.2 VERIFY maintenance has completed installation of head lifting rig alignment pins and stud hole plugs and is ready for head removal.

_____/_____ 4.1.8.3 VERIFY tools and equipment are removed from the refueling cavity and fuel transfer areas.

_____/_____ 4.1.8.4 VERIFY the refueling cavity gate is OPEN.

_____/_____ 4.1.8.5 CLOSE RC-V-147, reactor vessel flange leakoff isolation valve.

NOTE

- The evaluation for CR 06-02259 determined that movement of the reactor vessel upper internals and the CRDM drive shafts is NOT a CORE ALTERATION. As a result, none of the activities in Section 4.1 of this procedure are CORE ALTERATIONS. Therefore, the manipulator crane radiation monitors are not required to be in service. The manipulator crane area radiation monitors should remain out-of-service through the completion of placing the reactor vessel upper internals in the storage stand.
- HD0955.15 removes rad monitors from service by changing Channel Item 16 from "001" to "000". Although the monitor will still indicate the true reading, **no** alarm functions **or** control functions will be active for that channel.

_____/_____ 4.1.8.6 NOTIFY RP to remove the manipulator crane area radiation monitors (RM-6535A/6535B) from service per HD0955.15.

NOTE

The water level will just cover the CRDS when RC-LI-9405 indicates approximately 170 inches. The tops of the CRDS will break the surface when they are unlatched at this level.

_____/_____ 4.1.8.7 NOTIFY Maintenance to remove the reactor vessel head per MS0504.10:

_____/_____ 4.1.8.7.1 COORDINATE filling the Refueling Cavity in accordance with OS1015.02 during the reactor vessel head lift.

_____/_____ 4.1.8.7.2 VERIFY the RCCA extension shafts are free during head removal.

_____/_____ 4.1.8.7.3 If the button height measuring tool will **not** be used, STOP the fill of the Refueling Cavity when the level just covers the CRDS.

_____/_____ 4.1.8.8 VERIFY completion of auxiliary hoist preoperational checks per IX1641.903. This verifies operability of the refueling machine auxiliary hoist and shall be performed within 100 hrs prior to the movement of RCCA drive shafts.

_____/_____ 4.1.8.9 VERIFY UNLATCHED or UNLATCH the RCCA drive shafts in accordance with OS1015.17.

_____/_____ 4.1.8.10 If cavity fill was stopped to verify CRDS unlatched, RESUME fill of the Refueling Cavity.

_____/_____ 4.1.8.11 When the refueling cavity and spent fuel pool levels are the same, OPEN the spent fuel pool gate.

4.1.9 If required, TRANSFER the RCCA drive shafts from the reactor vessel upper internals to the drive shaft storage racks (DSSRs) as follows:

_____/_____ 4.1.9.1 VERIFY the manipulator crane area radiation monitors (RM-6535A/6535B) are out-of-service.

_____/_____ 4.1.9.2 TRANSFER the RCCA drive shafts from the upper internals to the DSSRs per OS1015.17.

_____/_____4.1.10 VERIFY that the following procedures have been reviewed with the operating shift and maintenance personnel prior to removing the upper internals: (Ref. 5.18)

- OS1215.05, Loss of Refueling Cavity Water
- MS0504.11, Reactor Vessel Upper Internals Assembly Removal and Storage

_____/_____4.1.11 NOTIFY maintenance to remove the upper internals per MS0504.11, Reactor Vessel Upper Internals Assembly Removal and Storage.

NOTE

A full core offload requires 2 SF pumps aligned through 2 SF heat exchangers. If PCCW cross tie operation is anticipated, it must be done prior to full core offload. Realignment of PCCW for cross tie operation requires a temporary reduction in SF cooling flow, until the cross tie is established. Realignment of PCCW while fuel movement is in progress is acceptable, but 2 SF pumps and 2 SF heat exchangers must be in service before the final assembly is placed in the SF pool.

_____/_____4.1.12 VERIFY or PLACE two trains of SF cooling (i.e., 2 SF pumps and 2 SF heat exchangers) in service per OS1014.02, Operation Of SF Cooling And Purification System.

4.1.13 ESTABLISH refueling valve throttle positions by performing the following:

_____/_____ 4.1.13.1 UNLOCK and THROTTLE OPEN CC-V-173, SF-E-15A PCCW return and establish 3000 gpm (2800 – 3000 gpm) as-read on CC-FISL-206.

_____/_____ 4.1.13.2 UNLOCK and THROTTLE OPEN CC-V-172, SF-E-15B PCCW return and establish 3000gpm (2800 - 3000 gpm) as-read on CC-FISL-2176.

_____/_____ 4.1.14 COMPLETE / CHECK COMPLETED Form A.

NOTE

All CORE ALTERATIONS **shall** be observed and directly supervised by a licensed Senior Reactor Operator who has **no** other concurrent responsibilities during this operation.

4.2 Performing CORE ALTERATIONS During Refueling

_____/_____4.2.1 VERIFY Prerequisites are complete.

_____/_____4.2.2 ESTABLISH communications between the Control Room and refueling personnel in containment within one hour prior to the start of CORE ALTERATIONS. RECORD time of verification in Unit Journal.

CAUTION

If the core must be offloaded for reasons other than a normal refueling, it can **not** be started prior to 120 hours after shutdown. (Ref. 5.26)

_____/_____4.2.3 REVIEW the date and time of reactor shutdown. VERIFY the reactor has been shutdown for at least 80 hours prior to irradiated fuel movement and RECORD this verification in Unit Journal.

_____/_____4.2.4 VERIFY completion of the mast load test per IX1641.903 within 100 hrs prior to the start of CORE ALTERATIONS.

NOTE

HX0955.32, RDMS Setpoint determination for RP Monitors, provides guidance for expected background and setpoints. Due to the varying background on the manipulator crane radiation monitors the setpoints should be set for expected background and adjusted if radiological conditions are abnormal.

_____/_____4.2.5 NOTIFY RP to SET / VERIFY SET the manipulator crane area radiation monitor setpoints (RM-6535A/6535B) in accordance with T.S. 3.3.3.1, Table 3.3-6, Item 2.b.

_____/_____4.2.6 RP has SET / VERIFIED SET the manipulator crane area radiation monitor setpoints (RM-6535A/6535B) in accordance with T.S. 3.3.3.1, Table 3.3-6, Item 2.b.

_____/_____ 4.2.7 NOTIFY RP to restore the manipulator crane area radiation monitors (RM-6535A/6535B) to service per HD0955.15.

4.2.8 IF the Containment Purge And Exhaust Isolation is needed for COP or CAP, THEN PERFORM the following:

_____/_____ 4.2.8.1 NOTIFY I&C to verify absence of RPS/ESF actuation signals.

_____/_____ 4.2.8.2 PLACE both Trains of SSPS in OPERATE.

NOTE

These briefings may be held in conjunction with those required by RS0721, Refueling Administrative Control.

_____/_____ 4.2.9 VERIFY that the following procedures have been reviewed with the operating shift and refueling shift personnel. (Ref. 5.18)

- OS1215.05, Loss Of Refueling Cavity Water
- OS1215.06, Fuel Handling Accident
- OS1215.07, Loss Of SFP Cooling Or Level
- Precautions, Limitations and Setpoints of this Procedure, OS1000.09

4.2.10 PERFORM irradiated and new fuel movement as follows:

_____/_____ 4.2.10.1 Within 2 hours prior to the start of movement of fuel assemblies or control rods, VERIFY refueling cavity level is at least 23 feet above the reactor vessel flange. RECORD time of level verification in Unit Journal.

_____/_____ 4.2.10.2 Station refueling personnel and continuously man the fuel transfer area inside containment, spent fuel pool gate and fuel transfer valve during irradiated fuel movement. (Ref. 5.18)

_____/_____ 4.2.10.3 Within 1 hour prior to start of CORE ALTERATIONS, VERIFY direct communications established between Control Room and refueling personnel. RECORD time of verification in Unit Journal.

NOTE

1. With the fuel transfer gate valve open, changes in **either** FSB **or** containment ventilation could cause spent fuel pool and reactor cavity levels to change.
2. FH-RE-48 position is verified by lamp indication on 1-FH-CP-61, Pool Side Transfer Console. "Gate Valve Open" green lamp lit indicates transfer valve is open.

_____/_____ 4.2.10.4 VERIFY the reactor refueling cavity, fuel transfer areas and SFP level are between 25.25 feet and 25.5 feet.

_____/_____ 4.2.10.5 UNLOCK and OPEN FH-RE-48, fuel transfer tube gate valve. (Ref. 5.18)

_____/_____ 4.2.10.6 CHECK OPEN/OPEN the SFP and refueling cavity gates.

C A U T I O N

If Spent Fuel Pool temperature can **not** be maintained less than or equal to 115°F, restoration of the Protected Train SW Ocean pumps and train will be required as described in precaution 3.20.

_____/_____ 4.2.10.7 PERFORM refueling in accordance with Fuel Handling (FH) and Reactor Engineering (RE) procedures. RECORD time of start of CORE ALTERATIONS in Unit Journal.

NOTE

In order to minimize exposure to a loss of spent fuel **or** reactor cavity level event, the fuel transfer tube gate is closed whenever CORE ALTERATIONS are suspended **or** terminated for greater than **one** hour.

_____/_____ 4.2.10.8 If CORE ALTERATIONS, are to be terminated **or** suspended for greater than **one** hour, CLOSE and LOCK FH-RE-V48, fuel transfer tube gate valve. (Ref. 5.18)

_____/_____ 4.2.10.8.1 COMPLETE / CHECK COMPLETED Form B.

4.2.10.9 When CORE ALTERATIONS are complete:

_____/_____ 4.2.10.9.1 CLOSE and LOCK FH-RE-V48, fuel transfer tube gate valve. (Ref. 5.18)

_____/_____ 4.2.10.9.2 As directed by the US, PLACE both SSPS mode selector switches to TEST.

NOTE

HD0955.15 removes rad monitors from service by changing Channel Item 16 from "001" to "000". Although the monitor will still indicate the true reading, **no** alarm functions **or** control functions will be active for that channel.

_____/_____ 4.2.10.9.3 NOTIFY RP to remove the manipulator crane area radiation monitors (RM-6535A/6535B) from service per HD0955.15.

_____/_____ 4.2.10.9.4 COMPLETE / CHECK COMPLETED Form B.

_____/_____4.2.11 Refer to OS1000.13, Operation With The Reactor Defueled.

4.3 Entering MODE 6 from a Defueled Condition

_____/_____ 4.3.1 VERIFY Prerequisites are complete.

4.3.2 REMOVE the fuel transfer tube blind flange as follows. (Ref. 5.18)

_____/_____ 4.3.2.1 VERIFY FH-RE-48, fuel transfer tube gate valve is CLOSED.

_____/_____ 4.3.2.2 VERIFY the spent fuel pool gate is CLOSED.

_____/_____ 4.3.2.3 NOTIFY Maintenance to remove the fuel transfer tube blind flange per MS0535.05.

_____/_____ 4.3.3 NOTIFY Containment Coordinator to remove the lower cavity handrails.

_____/_____ 4.3.4 CHECK OPEN the refueling cavity gate.

_____/_____ 4.3.5 FILL the refueling cavity in accordance with OS1015.02, or an approved test procedure.

_____/_____ 4.3.6 When the refueling cavity and spent fuel pool levels are the same, OPEN the spent fuel pool gate.

_____/_____ 4.3.7 VERIFY I&C has PERFORMED required fuel transfer system checks per IX1641.903, Preoperational Checks Of Refueling Machine.

NOTE

HX0955.32, RDMS Setpoint determination for RP Monitors, provides guidance for expected background and setpoints. Due to the varying background on the manipulator crane radiation monitors the setpoints should be set for expected background and adjusted if radiological conditions are abnormal.

_____/_____ 4.3.8 NOTIFY RP to SET / VERIFY SET the manipulator crane area radiation monitor setpoints (RM-6535A/6535B) in accordance with T.S. 3.3.3.1, Table 3.3-6, Item 2.b.

_____/_____ 4.3.9 RP has SET / VERIFIED SET the manipulator crane area radiation monitor setpoints (RM-6535A/6535B) in accordance with T.S. 3.3.3.1, Table 3.3-6, Item 2.b.

_____/_____ 4.3.10 NOTIFY RP to restore the manipulator crane area radiation monitors (RM-6535A/6535B) to service per HD0955.15.

NOTE

All CORE ALTERATIONS **shall** be observed and directly supervised by a licensed Senior Operator who has **no** other concurrent responsibilities during this operation.

4.3.11 INITIATE CORE ALTERATIONS as follows:

_____/_____ 4.3.11.1 IF the Containment Purge And Exhaust Isolation is needed for COP or CAP, THEN PERFORM the following:

_____/_____ 4.3.11.1.1 NOTIFY I&C to verify absence of RPS/ESF actuation signals.

_____/_____ 4.3.11.1.2 PLACE both Trains of SSPS in OPERATE.

_____/_____ 4.3.11.2 ESTABLISH communications between the Control Room and refueling personnel in containment within one hour prior to the start of CORE ALTERATIONS. RECORD time of verification in Unit Journal.

_____/_____ 4.3.11.3 VERIFY completion of the mast load test per IX1641.903, within 100 hrs prior to the start of CORE ALTERATIONS

_____/_____ 4.3.11.4 VERIFY that the following procedures have been reviewed with the operating shift and refueling shift personnel. (Ref. 5.18)

- OS1215.05, Loss Of Refueling Cavity Water
- OS1215.06, Fuel Handling Accident
- OS1215.07, Loss Of SFP Cooling Or Level
- Precautions, Limitations and Setpoints of this Procedure, OS1000.09

_____/_____ 4.3.11.5 Within 2 hours prior to the start of movement of fuel assemblies or control rods, VERIFY refueling cavity level is at least 23 feet above the reactor vessel flange. RECORD time of level verification in Unit Journal.

_____/_____ 4.3.11.6 Station refueling personnel and continuously man the fuel transfer area inside containment, spent fuel pool gate and fuel transfer valve during irradiated fuel movement. (Ref. 5.18)

_____/_____ 4.3.11.7 Within 1 hour prior to start of CORE ALTERATIONS, VERIFY direct communications established between the control room and refueling personnel. RECORD time of verification in Unit Journal.

NOTE

1. FH-RE-48 position is verified by lamp indication on 1-FH-CP-61, Pool Side Transfer Console. "Gate Valve Open" green lamp lit indicates transfer valve is open.
2. Figure 7, Refueling Cavity Elevations, may be used as a backup to cavity level indicators.

_____/_____ 4.3.11.8 VERIFY the reactor refueling cavity, fuel transfer areas and SFP level are between 25.25 feet and 25.5 feet.

_____/_____ 4.3.11.9 UNLOCK and OPEN FH-RE-48 fuel transfer tube gate valve. (Ref. 5.18)

_____/_____ 4.3.11.10 OPEN/CHECK OPEN the SFP and refueling cavity gates.

_____/_____ 4.3.11.11 PERFORM refueling in accordance with Fuel Handling (FH) and Reactor Engineering (RE) procedures. RECORD time of start of CORE ALTERATIONS in Unit Journal.

_____/_____ 4.3.11.12 DECLARE MODE 6 when the first element enters the Reactor Refueling Cavity.

NOTE

In order to minimize exposure to a loss of spent fuel or reactor cavity level event, the fuel transfer tube gate is closed whenever CORE ALTERATIONS are suspended **or** terminated for greater than **one** hour.

_____/_____ 4.3.11.13 If CORE ALTERATIONS are to be terminated or suspended for greater than **one** hour, CLOSE and LOCK FH-RE-V48, fuel transfer tube gate valve. (Ref. 5.18)

_____/_____ 4.3.11.13.1 COMPLETE / CHECK COMPLETED Form B.

_____/_____ 4.3.11.14 When CORE ALTERATIONS are complete:

_____/_____ 4.3.11.14.1 CLOSE and LOCK FH-RE-V48, fuel transfer tube gate valve. (Ref. 5.18)

_____/_____ 4.3.11.14.2 As directed by the US, PLACE both SSPS mode selector switches to TEST.

NOTE

HD0955.15 removes rad monitors from service by changing Channel Item 16 from "001" to "000". Although the monitor will still indicate the true reading, **no** alarm functions **or** control functions will be active for that channel.

_____/_____ 4.3.11.14.3 NOTIFY RP to remove the manipulator crane area radiation monitors (RM-6535A/6535B) from service per HD0955.15.

_____/_____ 4.3.11.14.4 COMPLETE / CHECK COMPLETED Form B.

4.4 Termination of Refueling and MODE 5 Entry

_____/_____ 4.4.1 VERIFY Prerequisites are complete.

_____/_____ 4.4.2 VERIFY that the following procedures have been reviewed with the operating shift and maintenance personnel prior to removing the upper internals: (Ref. 5.18)

- OS1215.05, Loss Of Refueling Cavity Water
- MS0504.15, Reactor Vessel Upper Internals Assembly Installation

CAUTION

In MODE 6 with the vessel upper internals installed, two trains of RHR **must** remain operable. With the upper internals installed, the water volume contained in the reactor cavity is unavailable for core cooling. (Refer to T.S. Bases for T.S. 3.9.8.1) (Protected: Ref. 5.27)

_____/_____ 4.4.3 VERIFY both RHR trains OPERABLE

NOTE

The evaluation for Condition Report CR 06-02259 determined that movement of the reactor vessel upper internals and the CRDM drive shafts from the DSSRs is not a CORE ALTERATION.

_____/_____ 4.4.4 NOTIFY maintenance to install the upper internals per MS0504.15, Reactor Vessel Upper Internals Assembly Installation.

_____/_____ 4.4.4.1 VERIFY the manipulator crane area radiation monitors (RM-6535A/6535B) are out-of-service.

4.4.5 If required, TRANSFER the RCCA drive shafts from the DSSRs to the reactor vessel upper internals:

_____/_____ 4.4.5.1 VERIFY the manipulator crane area radiation monitors (RM-6535A/6535B) are out-of-service.

_____/_____ 4.4.5.2 TRANSFER the RCCA drive shafts from the DSSRs to the upper internals per OS1015.17.

CAUTION

All SG Level Hi-Hi and Level Lo-Lo Bistables were placed in BTI to prevent an inadvertent ESF actuation during SG filling, draining, or recirculation activities. SG levels must be >20% NR and <90.8% NR, prior to taking Bistables out of BTI, in order to prevent an ESF actuation.

NOTE

1. Latching CRDM drive shafts is a CORE ALTERATION.
2. Figure 7, Refueling Cavity Elevations, may be used as a backup to cavity level indicators.

_____/_____4.4.6 VERIFY/ESTABLISH all SG narrow range levels >20% NR and <90.8% NR.

_____/_____4.4.7 VERIFY completion of auxiliary hoist preoperational checks per IX1641.903. This verifies operability of the refueling machine auxiliary hoist and shall be performed within 100 hrs prior to the start of latching the RCCA drive shafts.

_____/_____4.4.8 Within 2 hours prior to the start of movement of fuel assemblies or control rods, VERIFY refueling cavity level is at least 23 feet above the reactor vessel flange. RECORD time of level verification in Unit Journal.

_____/_____4.4.9 VERIFY direct communications between the Control Room and personnel at the refueling station within 1 hour of starting CORE ALTERATIONS, per TR25-3.9.5.

NOTE

HX0955.32, RDMS Setpoint determination for RP Monitors, provides guidance for expected background and setpoints. Due to the varying background on the manipulator crane radiation monitors the setpoints should be set for expected background and adjusted if radiological conditions are abnormal.

_____/_____4.4.10 NOTIFY RP to SET / VERIFY SET the manipulator crane area radiation monitor setpoints (RM-6535A/6535B) in accordance with T.S. 3.3.3.1, Table 3.3-6, Item 2.b.

_____/_____ 4.4.11 RP has SET / VERIFIED SET the manipulator crane area radiation monitor setpoints (RM-6535A/6535B) in accordance with T.S. 3.3.3.1, Table 3.3-6, Item 2.b.

_____/_____ 4.4.12 NOTIFY RP to restore the manipulator crane area radiation monitors (RM-6535A/6535B) to service per HD0955.15.

4.4.13 IF the Containment Purge And Exhaust Isolation is needed for COP or CAP, THEN PERFORM the following:

_____/_____ 4.4.13.1 VERIFY there is no existing RPS / ESF actuation signals.

_____/_____ 4.4.13.2 PLACE both Trains of SSPS in OPERATE.

_____/_____ 4.4.14 LATCH the RCCA drive shafts per OS1015.17.

4.4.15 When all RCCA drive shafts are latched, PERFORM the following:

_____/_____ 4.4.15.1 CONFIRM J-slots have been concurrently verified by two refueling SROs using an underwater camera and monitor.

_____/_____ 4.4.15.2 VERIFY Form A of OS1015.17, RCCA Unlatching/Latching Checklist has been completed and reviewed.

NOTE

HD0955.15 removes rad monitors from service by changing Channel Item 16 from "001" to "000". Although the monitor will still indicate the true reading, **no** alarm functions **or** control functions will be active for that channel.

4.4.16. When CORE ALTERATIONS are complete:

_____/_____ 4.4.16.1 As directed by the US, PLACE both SSPS mode selector switches to TEST.

_____/_____ 4.4.16.2 NOTIFY RP to remove the manipulator crane area radiation monitors (RM-6535A/6535B) from service per HD0955.15.

_____/_____4.4.17 Prior to installation of the head, VERIFY compliance with the following Tech. Specs:

- TR29-3.1.2.3, Boration Systems - Charging Pump Shutdown (TR29-4.1.2.3.2)
- 3.4.9.3, Pressure/Temperature Limits - Overpressure Protection Systems
- 3.5.3.2, ECCS Subsystems - T_{avg} Equal to or less than 200°F

CAUTION

To prevent O-ring failure, the reactor vessel level should be maintained at 28 to 32 inches below vessel/head mating surfaces, until the first 6 bolts are tensioned.

NOTE

A Clearance Section release should be prepared for the SM tags hung for the components listed in Prerequisite 2.2.2.1 and 2.2.2.3. SF-V-80, SF-V-81, SF-V-83 and SF-V-84 will be maintained open after the cavity is drained per OS1015.10, Refueling Canal And Cavity Drain. (CR 00-13622)

_____/_____4.4.18 DRAIN the refueling cavity per OS1015.10 and INSTALL the reactor head per MS0504.16.

_____/_____4.4.19 REMOVE Refueling Cavity underwater lighting.

CAUTION

If an SI pump is made available per the provisions and restrictions of T.S. 3.5.3.2, the incore thimbles must be reinserted prior to tensioning the reactor vessel head. (Ref. 5.24)

_____/_____4.4.20 HAVE I&C reinsert the incore thimble tubes per IS1690.816.

_____/_____4.4.21 NOTIFY Maintenance to install the fuel transfer tube blind flange per MS0535.06.

_____/_____ 4.4.22 COMPLETE the MODE 6 to 5 Mode Change Checklist, Form ODI.82D.

4.4.23 VERIFY completion of the following maintenance activities:

_____/_____ 4.4.23.1 MS0504.17, Reactor Head Alignment Pin And Stud Hole Plug Removal.

_____/_____ 4.4.23.2 MS0504.18, Reactor Head Studs Installation And Tensioning. RECORD MODE 5 entry upon completion of the tensioning of all head studs.

_____/_____ 4.4.23.3 Manually SELECT MODE 5 monitoring on the MPCS Management screen. PLACE MODE determination to AUTO.

_____/_____ 4.4.23.4 VERIFY current MODE using MODE/EVENT screen.

_____/_____ 4.4.23.5 MS0504.20, Installation Of Reactor Head Insulation

_____/_____ 4.4.24 VERIFY Mechanical Maintenance has removed the reactor cavity seal ring access hatch covers per 1-FH-RE-18-M11B.

_____/_____ 4.4.25 NOTIFY Technical Support to perform leak check of the fuel transfer tube blind flange per EX1803.003.

4.4.26 ESTABLISH normal valve throttle positions by performing the following:

_____/_____ 4.4.26.1 UNLOCK the following valves:

CC-V-172, SF-E-15B PCCW return

CC-V-173, SF-E-15A PCCW return

_____/_____ 4.4.26.2 THROTTLE CLOSED on CC-V-172, SF-E-15B PCCW return, to obtain a new throttled position of 5 degrees OPEN.

_____/_____ 4.4.26.3 THROTTLE CLOSED on CC-V-173, SF-E-15A PCCW return, to obtain a new throttled position of 5 degrees OPEN.

_____/_____ 4.4.26.4 LOCK the following valves:

CC-V-172, SF-E-15B PCCW return

CC-V-173, SF-E-15A PCCW return

_____/_____ 4.4.27 COMPLETE Form C, Independent Verification Checklist.

_____/_____ 4.4.28 PROCEED to the applicable procedure per US:

☐ OS1000.14, Reactor Coolant System Evacuation and Fill

- OR -

☐ OS1001.01, Reactor Coolant System Fill and Vent.

4.5 Final Conditions

☐ 4.5.1 The plant is in MODE 5 with RCS temperature less than 140°F.

5. REFERENCES

5.1 T.S. 3/4.9, Refueling Operations

5.1.1 T.S. 3/4.9.1, Boron Concentration

5.1.2 T.S. 3/4.9.2, Instrumentation

5.1.3 T.S. 3/4.9.3, Decay Time

5.1.4 T.S. 3/4.9.4, Containment Building penetrations

5.1.5 TR 25-3.9.5, Refueling Communications

5.1.6 TR 26-3.9.6, Refueling Machine

5.1.7 TR 27-3.9.7, Crane Travel - Spent Fuel Storage Areas

5.1.8 T.S. 3/4.9.8, Residual Heat Removal and Coolant Circulation

5.1.9 T.S. 3/4.9.10, Water Level, Reactor Vessel

5.1.10 T.S. 3/4.9.11, Water Level, Storage Building

5.1.11 T.S. 3/4.9.12, Fuel Storage Building, Emergency Air Cleaning

5.1.12 T.S. 6.2.2, Station Staff

5.2 TR29-3.1.2.1, Boration Systems Path, Shutdown

5.3 TR29-3.1.2.3, Reactivity Control Systems Charging Pump, Shutdown

5.4 TR29-3.1.2.5, Reactivity Control Systems Borated Water Source, Shutdown

5.5 T.S. 3.1.2.7, Unborated Water Sources - Shutdown

5.6 T.S. 3.3.3.1, Instrumentation, Radiation Monitors Required for Plant Operations

5.7 T.S. 3.8.1.2, Electrical Power Systems A.C. Sources Shutdown

5.8 Fuel Transfer System Tech Manual W120-35, F.P. 55809

5.9 RCC Change Tool Tech Manual W120-38, F.P. 56124

5.10 New Fuel Elevator Tech Manual W120-44, F.P. 56727

5.11 Reactor Vessel Tech Manual C490-1, F.P. 53468

5.12 Refueling Machine Tech Manual W120-46 and W120-47, F.P. 56190 and F.P. 56950

5.13 Seabrook Station UFSAR, Section 9.1.4

5.14 P&IDs, BRS-D20853, SF-B20480, RC-B20840, CS-B20720

5.15 Loops & Logics 503881, 503882, 503883, 503884, 503885, 506771, 506772, 506772, 506773, 506774, 506775 and 506776

5.16 UFSAR Section 6.5.1.2.b

5.17 UFSAR Section 6.5.1.4.b

5.18 SSP #85-737

5.19 Westinghouse Technical Bulletin 87-02

5.20 INPO SER 90-17

5.21 NUREG 1410 Vogtle Loss of RHR

5.22 SSMA MA3.4 Foreign Material Exclusion

5.23 NYN-91110, 91096, Request for Additional Information Regarding Safety Injection Pump Operability in MODES 5 and 6

5.24 NFSB 03-0035 Framatome Procedural Guidance for core offloads

5.25 CR 02-13225-13 for LAR 02-06

5.26 CR 02-13225-16 for Emergency Core Offloads

5.27 CR 04-01490, MODE 6 Requirement for Two Operable RHR Trains with Vessel Upper Internals Installed (Refer to T.S. Bases for TS 3.9.8.1)

5.28 CR 06-02259 (support for OR11 Split-Pin Project)

6. SUMMARY OF CHANGES

6.1 Rev. 07: This procedure was revised in accordance with MNPR, PR 3.2. (August 2006)

- Capitalized MODE throughout procedure when applied to operating MODES as defined by Technical Specification.
- Capitalized CORE ALTERATION throughout procedure when applied as defined by Technical Specification.
- Replaced reference to OP11.4 for MODE change checklists with ODI.82 in Prerequisites 2.2.16, 2.2.19 and step 4.4.21.
- Reordered Prerequisites to group common topics.
- Updated Section applicability for Prerequisites.
- Added new Prerequisites 2.2.13 and 2.2.23 to prompt completion of required procedure reviews.
- Added missing Tech. Specs. to 2.2.15.
- Added reference to required surveillances to Prerequisites.
- Added Prerequisite 2.2.10 to ensure maintenance has pre-staged measurement of reactor pressure vessel flange and head gap, if required.
- Deleted note prior to section 4.1.7 concerning restrictions associated with measuring reactor pressure vessel flange and head gap.
- Added subsection 4.1.7.1 to provide for measurement of the reactor pressure vessel flange and head gap, when required.
- Added notes prior to new step 4.1.8.6 concerning the requirements for the status of the Manipulator Crane radiation monitors and the process of removing a radiation monitor from service.
- Replaced step 4.1.8.6 with instruction to remove the Manipulator Crane radiation monitors from service.
- Added new subsection 4.1.8.7 to clarify actions for vessel head removal. Incorporated chg 27 step 4.1.8.7 into subsection 4.1.8.7.
- Added new subsection 4.1.9 to support transfer of the RCCA drive shafts from the reactor vessel upper internals to storage racks, if required.

- Removed (and renumbered) steps 4.2.5, 4.3.8 and 4.4.10 as movement of the upper internals is no longer considered a CORE ALTERATION. Therefore, choosing between upper internals and fuel movement / CRDM latching is not required.

- Added steps 4.2.7, 4.3.10 and 4.4.12 with instruction to restore the Manipulator Crane radiation monitors to service.

- Added steps 4.2.8, 4.3.11.1 and 4.4.13 to ensure SSPS is placed in OPERATE if Containment Purge And Exhaust Isolation is needed for COP or CAP.

- Enhanced subsection addressing completion of CORE ALTERATIONS.

- Split old step 4.2.8.5 (new 4.2.10.7 and 4.2.10.8) and old step 4.3.11.8 (new 4.3.11.8 and 4.3.11.9) to avoid multiple tasks within one step.

- Steps 4.3.11.13 and 4.3.11.14 provide additional guidance / actions to be completed when CORE ALTERATIONS have been completed.

- Moved chg 27 step (of previous Rev.) 4.4.1 to section 4.3.11.14.

- Moved chg 27 CAUTION and step 4.4.2 to later in section when SSPS is placed in OPERATE.

- Added new step 4.4.1 to ensure completion of Prerequisites.

- Added note prior to renumbered step 4.4.2 concerning definition of CORE ALTERATIONS during reactor re-assembly.

- Enhanced guidance in step 4.4.3 for installation of the upper internals concerning status of Manipulator Crane radiation monitors.

- Added new step 4.4.5 to support reinstallation of the RCCA drive shafts.

- Added note prior to step 4.4.6 to remind operators that latching RCCA drive shafts is a CORE ALTERATION.

- Added new step 4.4.9 to ensure Technical Specification required communications has been established for CORE ALTERATIONS.

- Added new step 4.4.16 to provide guidance on actions to be taken when CORE ALTERATIONS have been completed.

- Added CAUTION concerning cavity / reactor vessel water level to prevent reactor head O-ring damage.

- Revised the required throttle position for PCCW return from Spent Fuel Heat Exchangers 15A and 15B per MSE 06MSE079.

- Added information from Engineering Evaluation 06-023 to allow an additional two fuel assemblies in the cavity and canal at any one time when performing Ultrasonic Fuel Cleaning during core off load or core reload operations.

- Reordered steps to move completion of Form C after alignment of components.

- Modified Form B to accommodate IV of FH-V-48 in sections 4.2 and 4.3

- Added new Form C accommodate required IVs of section 4.4.

6.2 Rev. 07 Chg. 01 (October 2006) typed field change

- Added a Note and changed step 4.2.10.8 to permit greater flexibility to leave the fuel transfer valve open for brief suspensions of CORE ALTERATIONS.

- Incorporated into Change 03.

6.3 Rev. 07 Chg. 02 (October 2006) typed field change

- Added a Note and changed step 4.3.11.13 to allow greater flexibility to leave the fuel transfer valve open for brief suspensions of CORE ALTERATIONS.

- Incorporated into Change 03.

6.4 Rev. 07 Chg. 03 (October 2006) typed field change

- Added Figure 7, Refueling Cavity Elevations for a backup to the cavity level indicators.

- Enhanced note prior to step 4.3.11.8 referring to Figure 7. (CR 06-12063)

- Incorporates Changes 01 and 02.

Figure 1: Limitations and Setpoints

1. Allow **no** more than two irradiated assemblies in the cavity and canal at any one time. Fuel in the transfer car is counted as if it were in the canal until it is latched by the spent fuel handling tool. Fuel in the core is counted as in the cavity as soon as it is latched with the manipulator crane. (Ref. 5.18)

   If fuel cleaning is being performed during core off-load or core reload, Engineering Evaluation EE-06-023 states that two additional fuel assemblies can be in the fuel cleaning chambers.

2. The minimum RHR flow in MODE 6 is 2,750 gpm.

3. Maintain at least 23 feet of water above the reactor vessel flange during CORE ALTERATIONS.

4. The water level in the vessel should **not** be raised closer than six inches to the vessel mating surface prior to tensioning the first six bolts.

5. When there is fuel in the reactor, maintain greater than 68°F in the RCS to ensure the RCS temperature is within its analyzed range for shutdown margin calculation. (Ref. 5.21)

6. The temperature range to detension the reactor vessel studs is 68°F to 140°F. (Ref. 5.21)

7. In MODE 6 with the vessel upper internals installed, two trains of RHR **must** remain operable. With the upper internals installed, the water volume contained in the reactor cavity is unavailable for core cooling. (Refer to T.S. Bases for T.S. 3.9.8.1) (Protected: Ref. 5.27)

Figure 2: Recommended Notifications and Actions for Foreign Objects Dropped in the Refueling Cavity or Spent Fuel Pit

1. Notify the Refueling SRO.

2. Notify the Shift Manager.

3. The Refueling SRO or the Shift Manager will evaluate if any component or fuel movements need to be stopped.

4. Depending on the specific circumstances, the following additional notifications should be considered:

   - Operations Manager
   - Plant Manager
   - Reactor Engineering
   - Engineering (for engineering and safety evaluations, if required)
   - Plant Engineering (for work requests, if required)
   - Outage Coordinator (for evaluation of scheduling impacts, if required)
   - I&C Department (for setup of underwater camera and retrieval tools, if required)

5. Institute corrective actions to search for and retrieve the foreign object.

Figure 3: Shutdown and Refueling Related Definitions

1. CORE ALTERATIONS

   A CORE ALTERATION is defined in Technical Specifications as definition 1.9.

2. RCS Loops Filled

   Technical Specifications T.S. 3.4.1.4.1 and T.S. 3.4.1.4.2 contain different restrictions in MODE 5 depending on RCS loops filled or RCS loops not filled. See Technical Specification Bases 3/4.4.1, Reactor Coolant Loops and Coolant Circulation for all conditions needed to declare the RCS "Loops filled."

3. Reactivity Additions

   Transferring water to the RCS, refueling cavity, refueling canal, transfer canal, or spent fuel pool that is lower in boron concentration is acceptable provided that the boron concentration is greater than the refueling boron concentration requirement. Likewise, transferring water to the RCS, refueling cavity, refueling canal, transfer canal, or spent fuel pool that is lower in temperature (down to 50°F) than the water contained in those volumes is also acceptable.

4. RCS Reduced Inventory Condition

   As discussed in NRC Generic Letter 88-17, an RCS reduced inventory condition exists whenever the RCS water level is lower than negative 36 inches (as measured from the reactor vessel flange).

5. RCS Midloop Condition

   As discussed in NRC Generic Letter 88-17, an RCS midloop condition exists whenever the RCS water level is lower than the top of the reactor vessel hot legs (minus 71 inches as measured from the reactor vessel flange).

6. Available

   As discussed in NRC Generic Letter 88-17, equipment that is available, is ready to use within a short enough time to meet the intended need, but not necessarily operable because physical manipulations may be needed to realize an operable status.

Figure 4: Monitoring RCS Inventory When in MODEs 5 or 6

(Sheet 1 of 2)

BACKGROUND:

This good practice resulted from the demineralized water contamination event of September 30, 1991 (SIR 91-33, DM System Contamination from Letdown). It was then identified that RCS inventory control was inadequate when in MODEs 5 and 6 (i.e., an RCS makeup was **not** immediately identified as being abnormal).

GUIDELINES:

1.0 Use of computer graphics and trending capacity is preferred over monitoring chart recorders or indicators. This allows all personnel in the Control Room to monitor trends, versus the board section watchstander alone.

2.0 Anytime makeup is initiated, the reason should be investigated.

3.0 See Technical Specification Bases 3/4.4.1, Reactor Coolant Loops and Coolant Circulation for all conditions needed to declare the RCS "Loops filled."

4.0 Operator Aid 91-09, Refueling Elevations can be used to determine the monitoring range difference between the different level instruments.

5.0 MODE 5 RCS inventory control.

5.1 With charging in service, inventory control is generally bounded by monitoring pressurizer level versus VCT level.

5.2 With charging **not** in service (RHR slipstream, **or no** letdown in service), monitoring pressurizer level alone should suffice.

5.3 An approximate rule of thumb for pressurizer level with the RCS at ambient temperature is 139.5 gallons of makeup for every % change in level (per A0390 **or** RC-LI-462).

6.0 MODE 6 RCS inventory control.

6.1 During refueling operations, evaporation of water in <u>both</u> the containment and fuel storage building can result in makeup operation. The rate of evaporation is highly dependent on a number of parameters, such as:

- Reactor coolant and spent fuel pool temperatures
- Containment and fuel storage building temperatures
- Containment and fuel storage building humidity levels
- Ventilation fans running in either **or** both buildings

Figure 4: Monitoring RCS Inventory When in MODEs 5 or 6

(Sheet 2 of 2)

6.2 Changes in any of the above should be noted, as well as any changes in makeup needs. This will enable the operator to detect abnormal makeup once steady state conditions are obtained.

6.3 Changes in containment **or** fuel storage building pressures can result in sluicing between the two buildings and subsequent level changes. An approximate rule of thumb to determine sluicing is a change of 11/16" in the spent fuel pool level for every 1" change in refueling cavity level (.690 gallons).

7.0 Preferred and alternate indications for monitoring primary system inventory are listed below.

PARAMETER	PREFERRED CHANNEL	ALTERNATE CHANNEL
Pressurizer level	A0390 (RC-LI-462)	A0332 (RC-LI-459)[1] A0333 (RC-LI-460)[1] A0334 (RC-LI-461)[1]
Reactor Vessel Level (Non-midloop)	A0382 (RC-LI-9405)	TYGON[2] RC-XX-7315-1 RC-XX-7315-4 RC-LI-1311 RC-LI-1321 SHUTDOWN COOLING COLOR GRAPHIC
Reactor Vessel Level (Mid-loop)	A0298 (ULTRASONIC) A0299 (ULTRASONIC)	A0382 (RC-LI-9405) TYGON[2] SHUTDOWN COOLING COLOR GRAPHIC
VCT Level	A0624 CS-LR-185	CS-LI-185 CS-LI-112[2]
Refueling Cavity Level (Cavity **not** full)	A0382 (RC-LI-9405)	A1186 (SF-LI-2629) A0390 (RC-LI-462)
Refueling Cavity Level (Cavity full)	A0928 (SF-LI-2629-1)	A1186 (SF-LI-2629) A0390 (RC-LI-462)
Spent Fuel Pool Level	A1185 (SF-LI-2607)	SF-LE-2607[3]

1 RC-LI-459, 460 and 461 are **not** cold calibrated. Level changes will appear greater than actual at cold shutdown temperatures.

2 Local indications.

3 Holes on SF-LE-2607 are 3" apart, with the top 1/2" hole (about 1' below floor level) at elevation 25' 10 1/2" (relative to reactor vessel flange). Holes are 3" apart, with 1/2" holes every 1', and 1/4" holes every 3".

Figure 5: Core Offload Completion Times Vs. Service Water Temp

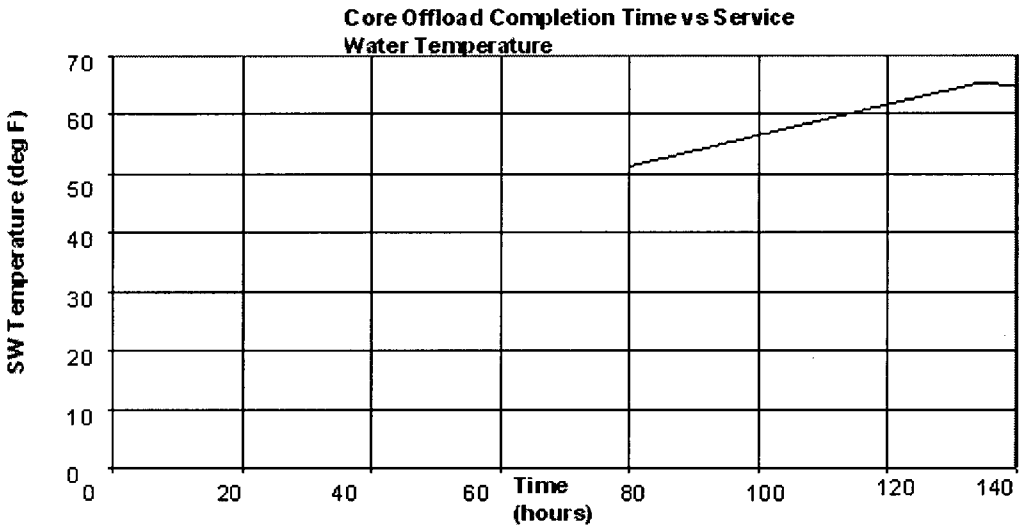

100013-2

Figure 6: SFP Temperature Vs. Time After Shutdown As A Function Of Cooling Tower Basin Temperature

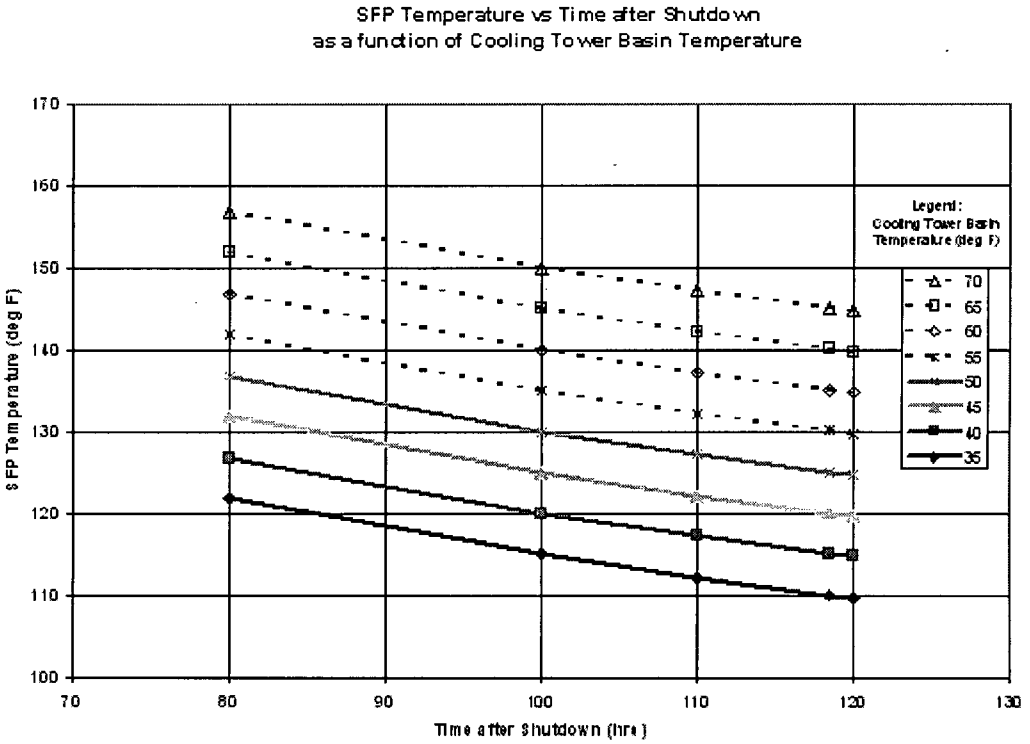

100013-3

Figure 7: Refueling Cavity Elevations

Containment Operating Deck Curb	Elevation 27 '-0 ½""
Containment Operating Deck	Elevation 26' –10 ½"
CAP Duct Invert	Elevation 25' -7 ½"
Skimmer Invert	Elevation 25' –1 19/32"
Center Line. Skimmer Water Level Balancing Hole	Elevation 24' –0 5/16"
Reactor Vessel Flange	Elevation 0' –0"

Form A: Independent Verification Checklist

(Sheet 1 of 1)

PROCEDURE PERFORMANCE

Procedure No.: OS1000.09 Procedure Section: 4.1

Performed By: _____ Date: _____ Time: _____
Name(s)

INDEPENDENT VERIFICATION

COMPONENT		POSITION	VERIFIED BY INITIALS
CC-V-172	SF-E-15B PCCW Return	LOCKED T/O 2800 - 3000 gpm **(Note 1)**	
CC-V-173	SF-E-15A PCCW Return	LOCKED T/O 2800 - 3000 gpm **(Note 1)**	

Note 1: Applicable only in MODE 6 or defueled

Verified By: _____ Date: _____ Time: _____
Name(s)

Form B: Independent Verification Checklist

(Sheet 1 of 1)

PROCEDURE PERFORMANCE

Procedure No.: OS1000.09 Procedure Section: 4.2 and 4.3

Performed By: _____ Date: _____ Time: _____
Name(s)

INDEPENDENT VERIFICATION

COMPONENT		POSITION	VERIFIED BY INITIALS
FH-RE-48	Fuel Transfer Tube Gate Valve	LOCKED CLOSED	

Note 1: Applicable in MODEs 1 to 5.

Verified By: _____ Date: _____ Time: _____
Name(s)

Form C: Independent Verification Checklist

(Sheet 1 of 1)

PROCEDURE PERFORMANCE

Procedure No.: OS1000.09 Procedure Section: 4.4

Performed By: _____ Date: _____ Time: _____
Name(s)

INDEPENDENT VERIFICATION

COMPONENT		POSITION	VERIFIED BY INITIALS
	Fuel Transfer Tube Blind Flange	INSTALLED	
CC-V-172	SF-E-15B PCCW RETURN	LOCKED T/O 5 degrees **(Note 1)**	
CC-V-173	SF-E-15A PCCW RETURN	LOCKED T/O 5 degrees **(Note 1)**	

Note 1: Applicable in MODEs 1 to 5.

Verified By: _____ Date: _____ Time: _____
Name(s)

PROCEDURE BASIS INFORMATION

Rev. 06 This procedure was revised in accordance with MNPR PR 3.2 (January 2003)

- Administratively revised procedure to incorporate all previous changes.
- Modified the procedure in accordance with DCR 00-19.

Rev. 06 Chg. 01 (February 2003)

- Procedure changed in accordance with DCR-019.

Rev. 06 Chg. 02 (April 2003)

- Added Note prior to step 4.2.7.1, to alert the operator that briefings may be consolidated with those required by RS0721 (CR 02-10341).

Rev. 06 Chg. 03 (August 2003)

- Changed Note step 2 prior to step 4.1.7.1 to reflect the cancellation of ODI.33 and its incorporation into OS1056.03.

Rev. 06 Chg. 04 (September 2003)

- Added additional administrative controls and guidance for full core offloads. (CR 02-13225-13, 02-13225-16 and LAR 02-06)

Rev. 06 Chg. 05 (October 2003)

- Incorporated changes reflecting the movement of T.S. 3.1.2.1, 3.1.2.3, 3.1.2.5 to TR29.
- Incorporated into change 06.

Rev. 06 Chg. 06 (October 2003)

- Removed a note prior to Step 2.2.23 describing PPE requirements for refueling personnel. PPE requirements are contained in the NASH.
- Clarified steps (4.1.7.7 and 4.1.7.10) on stopping the cavity fill for verifying CRDS unlatching. If a measuring height tool will be used to verify CRDS unlatched, there is no need to stop the cavity fill.
- Incorporates change 05.

Rev. 06 Chg. 07 (October 2003)

- To incorporate the 80 hour decay requirement of LAR 02-06.

Rev. 06 Chg. 08 (October 2003)

- Incorporated into Change 12.
- Changed step 2.2.8 to state that this prerequisite step is applicable to Section 4.2, Performing Core Alterations During Refueling.

Rev. 06 Chg. 09 (October 2003)

- Incorporated into Change 12.
- Removed requirements for performing SR ACOTs within 8 hours prior to core alterations. Note prior to step 4.1.7.6, steps 4.1.9 and Note, 4.2.3, 4.3.8 and Note, and 4.3.9.3.

Rev. 06 Chg. 10 (October 2003)

- Incorporated into Change 12.
- Enhanced Prerequisite step 2.2.8 to state that OX1423.24 and OX1423.26 must be complete or that the affected COP, CAP, and CAH penetrations meet the requirements of T.S. 3.9.4.

Rev. 06 Chg. 11 (October 2003)

- Incorporated into Change 12.
- Step 4.4.7 - Added steps to verify refueling SRO has performed an independent review of J-Slot Video and confirm Form A RCCA Unlatching/Latching Checklist has been completed/reviewed.

Rev. 06 Chg. 12 (October 2003)

- Incorporated changes 08, 09, 10, and 11.
- Tech clarification #162 has been incorporated into the bases of the Technical Specifications. Figure 3, step 2, and Figure 4 step 3.0.

Rev. 06 Chg. 13 (March 2004)

- Added cautions and steps requiring two trains of RHR to be operable in Mode 6 with the upper internals installed.
- Change written in response to CR 04-01490 and Duke Engineering & Services Report DE&S-NFSB-01-9137-1.

Rev. 06 Chg. 14 (April 2004)

- Enhanced precaution 3.8 to ensure consistency with NAP-402 Reactivity Management Expectations.

Rev. 06 Chg. 15 (July 2004)

- Corrected Step 5.26, typographical error.

Rev. 06 Chg. 16 (July 2004)

- Changed step 2.2.6 to verify EX1808.015 current and that it will remain current through refueling activities. (CR 03-08702)

Rev. 06 Chg. 17 (April 2005)

- Incorporated into Chg. 18
- Added a Note to inform operators about the limitation associated with using reactor vessel head for cold over pressure protection

Rev. 06 Chg. 18 (April 2005)

- Changed administrative requirements for verifying J-slots latched.
- Incorporates Chg. 17

Rev. 06 Chg. 19 (April 2005)

- Step 3.20: Due to the Stretch Power Uprate, the conservatism built into Figure 6 may be different than the stated 20°F.
- Figures 5 and 6: Curve replaced as a result of the Stretch Power Uprate initiated by DCR 03-012.

Rev. 06 Chg. 20 (April 2005)

- Incorporated into Change. 23.
- Enhanced Prerequisite 2.2.21 to notify the Security Shift Supervisor and remove reference to man the SFP. FSB has been upgraded as a Vital Area for security monitoring since October, 2001 per FPL/FPLE Physical Security Plan.

Rev. 06 Chg. 21 (April 2005)

- Added Note and Step 4.3.2 and Caution and Steps 4.4.2 and 4.4.3.
- Added new Figure 7.
- Changes made to allow placing SG level Bistables in BTI to prevent ESF Actuation.
- Incorporated into Change 23.

Rev. 06 Chg. 22 (April 2005)

- Added new Step 4.4.7 to verify communication with the refueling team per requirements of TR25-3.9.5.
- Incorporated in Change 23.

Rev. 06 Chg. 23 (April 2005)

- Changed Step 2.2.20 lines to read TR24-3.7.10 from TS 3.7.10 and ODCM/TRP 5.2 C.5.2 from TRP 5.2 C.5.2 per CR 05-04455.
- Incorporates Changes 20, 21 and 22.

Rev. 06 Chg. 24 (June 2005)

- Deleted Note and step 4.3.2 and renumbered.
- Deleted step 4.4.3 and renumbered.
- Deleted Figure 7.
- These steps and Figure will be moved to procedures OS1000.01, OS1000.04 and OS1000.15.

Rev. 06 Chg. 25 (September 2005)

- Incorporated into change 26.
- Added Note prior to Prerequisite 2.2.5 to remind Operator that the Refueling Purge Mode of CAP operation is preferred.

Rev. 06 Chg. 26 (September 2005)

- Incorporates change 25.
- Added Precaution 3.24 to remind Operators to look at Mode Determination status during mode change.
- Deleted [ITS] references.

Rev. 06 Chg. 27 (February 2006)

- Provided a new note to clarify how background is determined for the manipulator crane radiation monitors (movement of the refuel machine or irradiated components will vary background radiation levels). HP will determine expected background based on their procedure HX0955.32.
- Added steps to determine and verify the Manipulator Crane Radiation monitors are in service and set properly during core alterations Sections 4.2, 4.3, and 4.4.

Rev. 05: No changes made; converted from WordPerfect to Microsoft Word in the format specified in Rev. 00 of MNPR, PR 3.2. This procedure was converted on November 5, 1997.

Rev. 05 Chg. 01 (December 1997)

- Changed step 4.4.10.2 and Form B to position CC-V172 to the new lineup position of 5%. The lineup position changed in order to lower CC flow to its required flowrate of 1100 gpm.

Rev. 05 Chg. 02 (March 1998)

- Reworded steps 4.1.6.5 and 4.2.7 to include action words.
- Added appropriate I&C and Maintenance procedure titles to steps 4.1.6.5, 4.1.9, 4.2.7 and 4.3.8.
- Removed references to OR05 in steps 4.1.8, 4.1.9, 4.3.7, 4.3.8 and 4.4.9.
- Changes made per procedure conversion comments.

Rev. 05 Chg. 03 (March 1999)

- Added new steps 4.1.9 with associated note, and 4.4.10 to facilitate installation and removal of the refueling cavity exhaust plenum filters.
- Changes were made pursuant to MMOD 98-676, CAP System Refueling Cavity Exhaust Plenum Filters.

Rev. 05 Chg. 04 (March 1999)

- Canceled steps added per Chg. 03.
- Change made due to cancellation of MMOD 98-676, CAP System Refueling Cavity Exhaust Plenum Filters.

Rev. 05 Chg. 05 (April 1999)

- Incorporated into Change 06.
- Changed the MODE 6 and defueled position for CC-V172 to Locked Open 24%. In addition, the MODEs 1 through 5 position for this valve was changed to 10% open.

- Changed the Independent Verification Sheets to reflect the new throttled positions for CC-V172.
- This change was written in response to a request from Engineering and Tech Support. The supporting documentation for changing the positions of CC-V172 is the B Train PCCW flow balance performed by 86W004848.

Rev. 05 Chg. 06 (April 1999)

- Incorporated Change 05.
- Added activity numbers to steps 4.3.7 and 4.4.9 for installation and removal of the refueling cavity CAP duct assemblies.

Rev. 05 Chg. 07 (December 1999)

- Added note to describe indication for FH-RE-48 full open position.
- Added valve ID to steps 4.2.10.5 and 4.3.10.8.

Rev. 05 Chg. 08 (April 2000)

- Incorporated into Change 09
- Corrected T/S references that have been relocated to the new Technical Requirements Program 5.2.

Rev. 05 Chg. 09 (April 2000)

- Incorporated Change 08
- Changed level of use from continuous to general to comply with MNPR, PR 3.2, Figure 5.3.

Rev. 05 Chg. 10 (August 2000)

- Changed references from T.S. 3.9.5, 3.9.6, and 3.9.7 to TR 25-3.9.5, TR 26-3.9.6, and TR 27-3.9.7.
- Change written in response to License Amendment 72.

Rev. 05 Chg. 11 (October 2000)

- Added note prior to step 2.2.2 detailing the need to include the flush connection pipe caps in the SM clearance order.
- Added step 2.2.2.3 to ensure that all pipe caps are installed on drain flush connections installed per DCR 99-0030.

Rev. 05 Chg. 12 (October 2000)

- Added new steps 4.1.7.5 and 4.4.12 to close and open RC-V-147.

Rev. 05 Chg. 13 (November 2000)

- Incorporated in Chg. 14.
- Change written to relax the safety requirements for personnel directly involved in fuel handling.
- Safety Dept. was contacted for concurrence with this change.

Rev. 05 Chg. 14 (November 2000)

- Incorporates Change 13.
- Changed step 4.4.22 to direct proper transition to applicable procedure.

Rev. 05 Chg. 15 (December 2000)

- Deleted steps 4.4.18.6 and 4.4.18.7. (No longer exist with Simplified Head Package.)

Rev. 05 Chg. 16 (February 2001)

- Deleted step 4.4.12 (RC-V147 lineup position is closed and it will be opened by OS1001.06, Pressurizer Bubble Formation). CR 00-11756.

Rev. 05 Chg. 17 (March 2001)

- Added a Note prior to step 4.4.10 to control the release of SM tags that were previously hung. (CR 00-13622)
- Updated Form A and Form B, Independent Verification, for consistency with other Operations Department procedures.

Rev. 05 Chg. 18 (October 2001)

- Enhanced the Note prior to steps 2.2.2 and 4.4.10 to coincide with recent change to MA 4.2, per CR 01-05515.

Rev. 05 Chg. 19 (April 2002)

- Removed MS0504.01 and 1 RE MSSP REMV-M11B from procedure step 4.1.1. MS0504.01 was cancelled after installation of the simplified head package.

Rev. 05 Chg. 20 (May 2002)

- Removed the installation and removal of the CAP delay ducts. Per DCR 02-0004, these ducts are no longer required.
- Removed TS-033 definition of Core Alterations. TS-033 was cancelled on 5/1/02.

Rev. 05 Chg. 21 (June 2002)

- Added a step to place 2 SF pumps and 2 SF heat exchangers in service before starting fuel handling operations.
- Added steps to verify RM-6535A/B set points prior to core alteration.
- CR 02-06970 and CR 02-07154.

Rev. 05 Chg. 22 (October 2002)

- Added new Figure 4, Monitoring RCS Inventory When in MODES 5 to 6.

Rev. 05 Chg. 23 (November 2002)

SEABROOK STATION

Operations Procedure

"COMPLEX PROCEDURE"

Operation With RCS At Reduced Inventory/Midloop Conditions

OS1000.12

Rev. 04 Chg. 11

"COMPLEX PROCEDURE"

Level of Use
General

Procedure Owner:
AOM Support
System: MPE

Operation With RCS At Reduced Inventory/Midloop Conditions

TABLE OF CONTENTS

1. PURPOSE 4

2. REFERENCES 5

3. PREREQUISITES 7

4. SPECIAL PRECAUTIONS 10

5. INITIAL CONDITIONS 12

6. INSTRUCTIONS 13

6.1 Drain The RCS From Just Below Vessel Flange To The Hot Leg Midplane Using RHR Letdown 13

6.2 Operate The Plant With RCS At Reduced Inventory Or Midloop Conditions 29

6.3 Restore RCS Level To Between Minus 6 And Minus 30 To Inches 31

7. FINAL CONDITIONS 33

8. ACCEPTANCE CRITERIA 33

9. SUMMARY OF CHANGES 34

FIGURES AND FORMS

Figure 1: RC-LT-9405 Spool Piece Alignment For Vessel Head Removal....36

Figure 2: Primary Component Heights....37

Figure 3: Time To Boiling Vs. Time After Shutdown For RCS Water Level At Reduced Inventory (Minus 36 inches)....38

Figure 4: Time To Boiling Vs. Time After Shutdown For RCS Water Level At Midloop....39

Figure 5: Components That May Affect The RCS....40

Figure 6: Steam Generator Nozzle Hot Leg Elevations....47

Figure 7: RHR Pump Flow Vs. Level For The Onset Of Cavitation....48

Figure 8: Steam Generator Nozzle Dam....49

Figure 9: Monitoring RCS Inventory When in Modes 5 or 6....50

Form A: RCS Reduced Inventory/Midloop Operations Shift Checklist....52

Form B: RCS Reduced Inventory Water Level Log....54

Form C: Spool Piece Tracking Form....56

Form D: RC-LIT-9405/9467 Venting....57

ATTACHMENTS

Attachment 1: Operation With RCS At Reduced Inventory/Midloop Conditions Background Document....58

Attachment 2: Operation With RCS At Reduced Inventory/Midloop Conditions Pre-Test Briefing Document....67

Attachment 3: Operation With RCS At Reduced Inventory/Midloop Conditions Personnel List72

Attachment 4: Operation With RCS At Reduced Inventory/Midloop Conditions Chronological Log....73

Attachment 5: Briefing Handout....74

1. PURPOSE

1.1 Objective

Use this procedure to:

- Drain the RCS from just below the vessel flange to the hot leg midplane using RHR letdown (Section 6.1)
- Operate the plant with RCS at reduced inventory or midloop conditions (Section 6.2)
- Restore RCS level to between minus 6 inches and minus 30 inches (Section 6.3)

1.2 Definitions

1.2.1 The following levels define important reactor vessel elevations:

- Minus 59.25 inches is the height of the nozzle dam seat. (Protected: Ref. 2.23)
- Minus 71 inches equals the top of the hot leg nozzles.
- Minus 73.5 inches is the desired level for installing or removing the nozzle dams. (Protected: Ref. 2.23)
- Minus 81.5 inches is the minimum level for 3,500 gpm RHR flow. (Protected: Ref. 2.23)
- Minus 85.5 inches equals the hot leg midplane.
- Minus 95 inches is the lowest reliable level indicated by the sight glass, RC-LI-9405, and RC-LIT-9467. The reactor coolant pump weir interferes with their indication below this level.
- Minus 100 inches equals the bottom of the hot leg nozzles.

1.2.2 An RCS reduced inventory condition exists when reactor coolant system level is below minus 36 inches.

1.2.3 An RCS midloop condition exists when reactor coolant system level is below the top of the hot leg nozzles.

1.2.4 The RCS sightglass is the temporary tygon tube indicator installed between the top of the pressurizer and loop 3 flow sensing lines.

1.3 Discussion

Draining the reactor coolant system from reactor vessel flange to the hot leg midplane, including draining all steam generator channel heads, removes an estimated 30,000 gallons. Draining with nozzle dams installed in two SGs removes approximately 3,750 gallons.

During this procedure, the drain down rate is adjusted so the RCS sight glass, the ultrasonic level transmitters (when onscale) and RC-LIT-9467 agree within 15 inches. If RC-LIT-9467 is **not** available, RC-LI-9405 must agree within 15 inches of the RCS sight glass. If the level agreement **cannot** be maintained, the drain down is stopped and the reason determined for the level indication anomaly.

- RC-LI-9405, RX VESSEL LEVEL (+250 inches to -95 inches)
- RC-LIT-9467, RCS Narrow Range Level (+32 inches to -95 inches)
- RCS sight glass (+124 inches to -95 inches)
- RC-LM-9465, Loop 1 Ultrasonic Level (minus 71 to minus 92)
- RC-LM-9466, Loop 4 Ultrasonic Level (minus 71 to minus 92)

Figure 5, Components That May Effect The RCS, is for information only

1.4 Tools and Consumables

None

2. REFERENCES

2.1 T/S 3.1.1.2 Boration Control, Shutdown Margin - Tavg Less Than or Equal to 200°F

2.2 T/S 3.4.1.4.1 Reactor Coolant Loops and Coolant Circulation, Cold Shutdown - Loops Filled

2.3 T/S 3.4.1.4.2 Reactor Coolant Loops and Coolant Circulation, Cold Shutdown - Loops **Not** Filled

2.4 T/S 3.4.9.3 Reactor Coolant System, Pressure/Temperature Limits - Overpressure Protection Systems

2.5 T/S 3.9.8.2 Refueling Operations, Residual Heat Removal and Coolant Circulation - Low Water Level

2.6 OS1000.04, Plant Cooldown from Hot Standby to Cold Shutdown

2.7 OS1002.02, Operation of Letdown, Charging and Seal Injection

2.8 OS1013.03, Residual Heat Removal Train A Startup and Operation

2.9 OS1013.04, Residual Heat Removal Train B Startup and Operation

2.10 OS1020.02, Equipment Vent System Operation

2.11 OS1213.02, Loss of RHR During Reduced Inventory/Midloop Conditions

2.12 OS1401.12, Reduced Inventory Containment Integrity Verification

2.13 NRC Generic Letter 88-17, Loss of Decay Heat Removal

2.14 SER 26-89

2.15 MMOD 91-582

2.16 MMOD 92-506, RHR Temperature Control Valves Travel Restriction Device

2.17 STP-105, RHR/Reactor Coolant Midloop Operation Test

2.18 Westinghouse Letter NAH 95-804, Transmittal of Final Report for Determination of Decay Heat at RCS Pressure Less Than 35 psig, dated November 3, 1995

2.19 YAEC Analysis of Pressurizer Surge Line Flooding (Group #: TAG-SB-92-23)

2.20 F.P. 53468, Reactor Vessel Technical Manual

2.21 ISEG # R9201-I-04, ISEG Recommendations Concerning RHR Pump Cavitation During RCS Draindown, dated June 23, 1992

2.22 Engineering Evaluation 94-25, Reflux Cooling and Surge Line Flooding

2.23 Engineering Evaluation 95-10, Evaluation of Operation with Steam Generator Nozzle Dams

2.24 CR 02-08570-01-01, Calculation C-S-1-83910, RHR Heat Exchanger Capabilities During Refueling Outages.

2.25 CR 03-04392-01-03 PRA Assessment of Framatone Calculation SBC-1003.

3. PREREQUISITES

CAUTION

The RCS must contain an adequate hot leg vent path to limit RCS pressurization in the event of a loss of RHR cooling.

____/____3.1 If nozzle dams are **not** installed, only one pressurizer safety is required to be removed.

____/____3.2 If nozzle dams are installed or will be installed, one of the following conditions is satisfied: (Protected: Ref. 2.13, 2.18, and 2.23)

- The pressurizer manway is removed, or
- If shutdown for greater than two days, two or more pressurizer safety valves are removed, or
- If shutdown for greater than seven days, at least one pressurizer safety valve is removed.

____/____3.3 Refer to OS1001.11, Reactor Coolant System Shutdown Level Instrumentation. An RCS sightglass is in service. (Protected: Ref. 2.21)

____/____3.4 Refer to OS1001.11, Reactor Coolant System Shutdown Level Instrumentation. RC-LT-9405 & RC-LIT-9467 are in service. (Protected: Ref. 2.13 and 2.21)

____/____3.5 Refer to OS1001.11, Reactor Coolant System Shutdown Level Instrumentation. Midloop ultrasonic level measurement system is in service. (Protected: Ref. 2.13 and 2.21)

NOTE

If the RWST temperature is less than 70°F, the requirements of T/S 4.7.2 should be confirmed when filling the RCS.

____/____3.6 The RWST is available as a source of RCS makeup with the following conditions satisfied: (Protected: Ref. 2.13)

- RWST volume at least 360,000 gallons
- RWST boron concentration greater than the requirements of TR 29-3.1.2.5
- RWST temperature greater than 50°F

____/____3.7 A vent line is installed at the following locations and routed to a drain to allow for timely venting of RHR pumps:

- RC-V-473, A Train drop leg vent (-25′ penetration area)
- RC-V-474, B Train drop leg vent (-25′ penetration area)

____/____3.8 The MODE 5 to Reduced Inventory Checklist is complete. Refer to OP 11.4, MODE Change Checklist.

CAUTION

Only foreign material barriers such as screens or lint free dry rags are allowed for installation at these vent path locations to ensure an unrestricted RCS vent path.

____/____3.9 The reactor vent path to containment is unobstructed by **one** of the following methods:

- RC-V-322, Reactor Vessel Head Vent is open with a lint free rag over its flange.
- The reactor vessel head vent piping is installed and its alignment has been walked down to confirm a flow path to the pressurizer, (this could be the alignment if the vessel head was **not** removed).

____/____3.10 At least **two** core exit thermocouple in each Train is in service. (Protected: Ref. 2.13)

____/____3.11 Verify the Dispatcher has been notified of Mid loop Operations and the requirements to maintain two offsite power sources.

____/____3.12 Evaluate the forecasted weather conditions to ensure severe weather is not anticipated.

____/____3.13 Verify ODI.81, Posting for Mid loop, is complete.

____/____3.14 A responsible senior line manager who has authority and experience to provide necessary oversight during performance of this procedure has been designated by the Station Director.

NAME	TITLE

_____/_____3.15 The senior line manager has briefed operating and test personnel on management expectations concerning this procedure.

_____/_____3.16 The test coordinator has performed a pre-shift briefing. Refer to Attachment 2, Operation With RCS At Reduced Inventory/Midloop Conditions Pretest Briefing Document.

_____/_____3.17 The Station Director's approval has been obtained to take the plant to reduced inventory/midloop conditions.

4. SPECIAL PRECAUTIONS

NOTE

Abnormal procedures will be entered if the entry conditions warrant their use. The abnormal procedure in use will dictate the need to remain in or exit from this procedure.

____/____4.1 The Shift Manager may authorize continuing with this procedure if one of the three narrow range reactor vessel level instruments is out of service. The three narrow range level instruments are RC-LIT-9467, Rx Vessel Narrow Range Level, RC-LM-9465, Loop 1 Ultrasonic Level and RC-LM-9466, Loop 4 Ultrasonic Level.

____/____4.2 When operating at midloop, the RCS sight glass and level indication associated with an operating RHR Train may indicate 1.5 to 3.0 inches less than the actual level. RHR pump discharge into the cold leg via the SI accumulator discharge line creates a venturi effect that reduces the pressure seen by the associated level D/P cell or the sight glass.

____/____4.3 The RCS sightglass references the reactor vessel stud hole flange surface as the zero height elevation. The flange is at the minus 1 foot 10.5 inch mean sea level elevation. Refer to Figure 2, Primary Component Heights.

____/____4.4 During this procedure, the drain down rate is adjusted so the RCS sight glass, the ultrasonic level transmitters (when onscale) and RC-LIT-9467 agree within 15 inches. If RC-LIT-9467 is **not** available, RC-LI-9405 must agree within 15 inches of the RCS sight glass. If the level agreement **cannot** be maintained, the drain down is stopped and the reason determined for the level indication anomaly.

____/____4.5 Draining the reactor coolant system below the minus 71 inch height (minus 5 feet 11 inches) will result in draining the steam generator U tubes. Erratic level indication will occur as the U tubes break vacuum and water flows into the reactor vessel.

____/____4.6 Activities which could result in a RCS dilution below that required by RE-2 while in a reduced inventory conditions **shall** be avoided.

____/____4.7 Normal dilution tables should **not** be used during a reduced inventory condition.

____/____4.8 If instrument air is lost, the RHR heat exchanger outlet valves fail open. Maintaining RCS level above minus 78 inches will prevent pump vortexing due to high flow. (Protected: Ref. 2.14)

____/____4.9 The minimum allowable RCS temperature is 68°F. (Protected: Ref. 2.20)

____/____4.10 If the temperature of **either** the reactor **or** secondary coolant in the steam generators is less than 70°F, the pressure of both reactor and secondary coolants **shall** be verified to be less than 200 psig once per hour.

____/____4.11 The steam generator nozzle dam uses an inflatable seat. Air can leak from the cold leg nozzle dam and displace the water between the dam and the reactor coolant pump. When the cold leg nozzle dam is removed, reactor vessel level may lower by as much as 2.5 inches. The SG nozzle dam team will notify the Control Room prior to removing a cold leg nozzle dam.

____/____4.12 If this procedure is exited for an abnormal procedure and the abnormal procedure returns to this procedure upon its completion, **DO NOT** continue to decrease level until the issue that forced the use of the abnormal procedure is understood and corrected or evaluated by the Senior Line Manager.

____/____4.13 Per procedure MS0524.03, SG Primary Manway Cover Removal and Installation, and ES 99-1-20, Manual Installation and Removal of SG Primary Nozzle Dams, the following is required:

- Hot Leg Manways are removed first and installed last.
- Hot Leg Nozzle Dams are removed first and installed last.

____/____4.14 Changes to this procedure should receive an engineering review. (SOER 91-1)

5. INITIAL CONDITIONS

____/____5.1 The plant is in MODE 5 or 6 with irradiated fuel in the reactor vessel. (Protected: Ref. 2.23)

____/____5.2 The reactor coolant system water level is between minus 28 to minus 32 inches below reactor vessel flange. Refer to OS1001.02, Draining The Reactor Coolant System For Vessel Head Removal.

____/____5.3 The reactor coolant system temperature is maintained between 100°F and 140°F.

____/____5.4 Both trains of RHR are operable. (Protected: Ref. 2.13)

____/____5.5 Both emergency diesel generators are available.

____/____5.6 At least 2 offsite power sources are available.

____/____5.7 One charging pump is in service and supplying all coupled reactor coolant pump seals. The other pump is available with its breaker racked out and locked. Refer to OS1002.02, Operation Of Charging, Letdown, And Seal Injection.

____/____5.8 Refer to OS1002.02, Operation Of Letdown, Charging, And Seal Injection. RHR letdown is in service. Use of the letdown degasifier is desired for the drain down, (flow path will be aligned to the RWST to recover the water if the flow path is available).

____/____5.9 Containment integrity has been established. Refer to OS1401.12, Reduced Inventory Containment Integrity Verification. (Protected: Ref. 2.13)

____/____5.10 VCT makeup is aligned in automatic to supply makeup water at greater than or equal to RE-2.

____/____5.11 At least one of the following gravity feed flowpaths from the RWST to the RCS is available: (Protected: Ref. 2.13)

- CBS-V-2 through RC-V-22 and RC-V-23
- CBS-V-5 through RC-V-87 and RC-V-88

____/____5.12 An injection flowpath from RWST through a charging pump and SI-V-138 or SI-V-139 is available. (Protected: Ref. 2.13)

____/____5.13 The RCS sight glass and RC-LIT-9467 agree within 15 inches, (RC-LIT-9405 may be used in place of RC-LIT-9467). (Protected: Ref. 2.21)

6. INSTRUCTIONS

6.1 Drain The RCS From Just Below Vessel Flange To The Hot Leg Midplane Using RHR Letdown

_____/_____ 6.1.1 WALKDOWN the RCS sight glass checking for proper valve alignment, **no** sags, **no** kinks, **no** loop seals, and **no** air bubbles.

6.1.2 NOTIFY I&C to valve in the following:

_____/_____ • RH-PT-2585, RHR pump A suction pressure transmitter

_____/_____ • RH-PT-2586, RHR pump B suction pressure transmitter

C A U T I O N

One SI pump must be available to provide RCS makeup during midloop operation until Step 6.3.14. The preferred method is functional but inoperable by the control switch in PULL-TO-LOCK and a closed MOV.

_____/_____ 6.1.3 CHECK the RCS hot leg vent path and RECORD the vent path on Table 1:

TABLE 1 RCS VENT PATH	
Vent Path	

NOTE

The preferred final alignment is to have the same train RHR and charging pump running and the opposite train SI pump available.

6.1.4 If SI pump A is to be made available, PERFORM the following:

6.1.4.1 CHECK CLOSED/CLOSE the following valves:

_____/_____ • CS-V-460, RHR COMM XCON TO SI/CRG PUMPS

_____/_____ • CS-V-461, RHR COMM XCON TO SI/CRG PUMPS

_____/_____ • SI-V-102, SI TRAIN A ISO TO HL 1/4

_____/_____ • SI-V-114, SI PMP COMM OUTL ISO TO COLD LEGS

_____/_____ • SI-V-77, SI TRAIN B DISCH ISO TO HL 2/3

_____/_____ • SI-V-157, SI ACCUM FILL

6.1.4.2 CHECK OPENOPEN the following valves:

_____/_____ • CBS-V-47, TR A COMM SUCT TO SI PMPS A/B FRM RWST

_____/_____ • CBS-V-49, SI PUMP A SUCT ISO

_____/_____ • SI-V-90, SI PUMP A MIN FLOW ISO TO RWST

_____/_____ • SI-V-93, SI PUMP A/B COMM MIN FLOW ISO

_____/_____ 6.1.4.3 COMMENCE augmented surveillance for inoperable safety injection pumps. (Ref. T.S. 4.5.3.2) (Refer to Tech. Spec. Logs.)

_____/_____ 6.1.4.4 At bus 5, node A56, RACK IN SI pump A breaker. MAINTAIN the control switch in PULL-TO-LOCK per T.S. 4.5.3.2.

_____/_____ (IV) 6.1.4.5 Independently VERIFY SI pump A breaker at bus 5, node A56, racked in.

_____/_____ 6.1.4.6 COMPLETE SI Pump A Prestart Checklist.

_____/_____ 6.1.4.7 Go to step 6.1.6.

6.1.5 If SI pump B is to be made available, PERFORM the following:

6.1.5.1 CHECK CLOSED/CLOSE the following valves:

_____/_____ • CS-V-460, RHR COMM XCON TO SI/CRG PUMPS

_____/_____ • CS-V-461, RHR COMM XCON TO SI/CRG PUMPS

_____/_____ • SI-V-77, SI TRAIN B DISCH ISO TO HL 2/3

_____/_____ • SI-V-114, SI PMP COMM OUTL ISO TO COLD LEGS

_____/_____ • SI-V-102, SI TRAIN A ISO TO HL 1/4

_____/_____ • SI-V-157, SI ACCUM FILL

6.1.5.2 CHECK OPEN/OPEN the following valves:

_____/_____ • CBS-V-51, TR B COMM SUCT TO SI PMP A/B FRM RWST

_____/_____ • CBS-V-53, SI PUMP B SUCT ISO

_____/_____ • SI-V-89, SI PUMP B MIN FLOW ISO TO RWST

_____/_____ • SI-V-93, SI PUMP A/B COMM MIN FLOW ISO

_____ 6.1.5.3 COMMENCE augmented surveillance for inoperable safety injection pumps. (Ref. T.S. 4.5.3.2) (Refer to Tech. Spec. Logs.)

_____/_____ 6.1.5.4 At bus 6, node A76, RACK IN SI pump B breaker. MAINTAIN the control switch in PULL-TO-LOCK per T.S. 4.5.3.2.

_____/_____ (IV) 6.1.5.5 Independently VERIFY SI pump B breaker at bus 6, node A76, racked in.

_____/_____ 6.1.5.6 COMPLETE SI Pump B Prestart Checklist.

6.1.6 PLACE the following MPCS points on SCAN:

_____/_____ • A0213, RH PUMP 8A SUCTION PRESSURE

_____/_____ • A0214, RH PUMP 8B SUCTION PRESSURE

_____/_____ • B5889, RHR PUMP A SUCTION PRESSURE LOW

_____/_____ • B5890, RHR PUMP B SUCTION PRESSURE LOW

6.1.7 CHECK the following VAS alarm points are in RETURN:

_____/_____ • B5889, RHR PUMP A SUCTION PRESSURE LOW

_____/_____ • B5890, RHR PUMP B SUCTION PRESSURE LOW

6.1.8 MAKE the accumulators available for injection as follows:

6.1.8.1 At MCB, CHECK the following accumulator outlet valves closed:

_____/_____ • SI-V-3, ACCUM-A ISO

_____/_____ • SI-V-32, ACCUM-C ISO

_____/_____ • SI-V-17, ACCUM-B ISO

_____/_____ • SI-V-47, ACCUM-D ISO

6.1.8.2 PLACE the following accumulator valve breakers to ON:

_____/_____ • At MCC-522, node B35, SI-V-3, ACCUM TANK 9A OUTLET ISOL VALVE (2 breakers)

_____/_____ • At MCC-522, node B37, SI-V-32, ACCUM TANK 9C OUTLET ISOL VALVE (2 breakers)

_____/_____ • At MCC-622, node B36, SI-V-17, ACCUM TANK 9B OUTLET ISOL VALVE (2 breakers)

_____/_____ • At MCC-622, node B38, SI-V-47, ACCUM TANK 9D OUTLET ISOL VALVE (2 breakers)

NOTE

Steps 6.1.8.3 through 6.1.8.17 fill the accumulators to between 6,121 gal. and 6,596 gal., and adjust the N_2 pressure to between 80 psig and 90 psig. Steps for any accumulator that meets this criteria may be N/A'd.

_____/_____ 6.1.8.3 VERIFY check valve leak testing is **not** in progress.

_____/_____ 6.1.8.4 CHECK SI-V-62, TEST LINE HEADER ISO ORC, closed.

_____/_____ 6.1.8.5 OPEN SI-V-70, TEST LINE HEADER ISO IRC.

_____/_____ 6.1.8.6 OPEN SI-V-157, SI ACCUM FILL.

_____/_____ 6.1.8.7 As determined by US, PERFORM pump prestarts on the available SI pump.

_____/_____ 6.1.8.8 As directed by the US, START the available SI pump.

C A U T I O N

In order to satisfy T.S 3.5.1.2 requirements, the following two substeps **must** be performed together, as required to maintain accumulator pressure below 100 psig.

_____/_____ 6.1.8.9 OPEN the applicable valve for the accumulator to be filled and FILL to between 6,121 gallons and 6,596 gallons:

- SI-V-15, ACCUM-A DRAIN/FILL ISO
- SI-V-23, ACCUM-B DRAIN/FILL ISO
- SI-V-38, ACCUM-C DRAIN/FILL ISO
- SI-V-53, ACCUM-D DRAIN/FILL ISO

_____/_____ 6.1.8.10 If required to maintain accumulator pressure below 100 psig, VENT the accumulator being filled by cycling the applicable vent valves:

- SI-FV-2475 and SI-FV-2476, accumulator tank 9A vent valves
- SI-FV-2482 and SI-FV-2483, accumulator tank 9B vent valves
- SI-FV-2477 and SI-FV-2486, accumulator tank 9C vent valves
- SI-FV-2495 and SI-FV-2496, accumulator tank 9D vent valves

_____/_____ 6.1.8.11 When accumulator is at desired level, CLOSE the drain/fill valve:

- SI-V-15, ACCUM-A DRAIN/FILL ISO
- SI-V-23, ACCUM-B DRAIN/FILL ISO
- SI-V-38, ACCUM-C DRAIN/FILL ISO
- SI-V-53, ACCUM-D DRAIN/FILL ISO

_____/_____ 6.1.8.12 REPEAT steps 6.1.8.9 through 6.1.8.11 for any additional accumulator to be filled until all accumulators have between 6,121 gallons and 6,596 gallons.

_____/_____ 6.1.8.13 STOP the running SI pump and PLACE its control switch in PULL-TO-LOCK.

_____/_____ 6.1.8.14 BLEED OFF SI pump discharge pressure by opening then closing the fill valve for the accumulator just filled:

- SI-V-15, ACCUM-A DRAIN/FILL ISO
- SI-V-23, ACCUM-B DRAIN/FILL ISO
- SI-V-38, ACCUM-C DRAIN/FILL ISO
- SI-V-53, ACCUM-D DRAIN/FILL ISO

_____/_____ 6.1.8.15 CLOSE SI-V-157, SI ACCUM FILL.

_____/_____ 6.1.8.16 CLOSE SI-V-70, TEST LINE HEADER ISO IRC.

_____/_____	6.1.8.17	Refer to OS1005.05, Safety Injection System Operation. PRESSURIZE **all** accumulators to between 80 psig and 90 psig.
_____/_____	6.1.8.18	If the accumulator breakers are opened for other procedures, CLOSE, per step 6.1.8.2.

CAUTION

1. The Alarm LO LO setpoints on C6034 and C6035 must be set for -80.5 inches.

2. These setpoints input into the following alarms:

   - B8161, LP 1 MIDLOOP LVL LO LO FOR 3500 GPM
   - B8162, LP 4 MIDLOOP LVL LO LO FOR 3500 GPM

3. These are preset, you do **not** have to change them in step 6.1.9.

NOTE

1. The following setpoints are operator adjustable from the computer DATABASE MANAGER for points C6034, C6035, C6036 and A4237:

   - B8158, LP 4 MIDLOOP LEVEL LO (VARIABLE)
   - B8159, LP 1 MIDLOOP LEVEL LO (VARIABLE)
   - B8160, MID LOOP RCS TEMP HI (VARIABLE)
   - B8163, LP 1 MIDLOOP LEVEL HI (VARIABLE)
   - B8164, LP 4 MIDLOOP LEVEL HI (VARIABLE)
   - B8223, RX VESSEL NR LVL LOW (VARIABLE)

2. They are for operator convenience. Setpoints can be adjusted as often as desired.

_____/_____6.1.9 Per US direction, ADJUST the variable midloop temperature and level alarm setpoints from the following C points in the DATABASE MANAGER section of the main plant computer:

- C6034, LP 4 NARROW RANGE LEVEL
- C6035, LP 1 NARROW RANGE LEVEL
- C6036, RCS MAX THERMOCOUPLE TEMP
- B8223, RX VESSEL NR LVL LOW (VARIABLE)

CAUTION

RHR flow should be maintained at 2.900 gpm until level has been raised above reduced inventory. This will ensure ultrasonic level detectors maintain their lock.

_____/_____6.1.10 ADJUST in service RHR train flow to between 2800 and 2900 gpm.

_____/_____6.1.11 VERIFY other RHR train in standby.

NOTE

Aligning the letdown degasifier divert flow path to the RWST is desired so the drain water is recovered. If the flow path is **not** available normal letdown divert to the primary drain tank is an acceptable method.

6.1.12 IF the flow path is available align the letdown degasifier divert flow path to the RWST as follows:

_____/_____ 6.1.12.1 Place the Letdown Degasifier in service per OS1002.04, Operation Of The Letdown Degasifier, (section 4.2 is preferred but section 4.5 may be used).

_____/_____ 6.1.12.2 CHECK CLOSED 1-CS-V-446, Manual Makeup Isolation From Boric Acid Blender.

_____/_____ 6.1.12.3 OPEN 1-CS-V-444, RWST Makeup From Boric Acid Blender.

_____/_____ 6.1.12.4 OPEN 1-CS-V-499, BRS Makeup From Boric Acid Blender.

_____/_____ 6.1.12.5 CHECK AUTO/CLOSE 1-BRS-V-281, BRS-DM-13A/B ION EXCH BYPASS VLV.

_____/_____ 6.1.12.6 INFORM the waste watch that BOTH cesium removal ion exchanger inlet valves will remain closed for the drain down. This prevents processing the Primary Drain Tanks.

_____/_____ 6.1.12.7 CHECK CLOSED/CLOSE 1-BRS-V-1, BRS-DM-13A CRIE INLET VALVE.

_____/_____ 6.1.12.8 CHECK CLOSED/CLOSE 1-BRS-V-60, BRS-DM-13B CRIE INLET VALVE.

_____/_____ 6.1.12.9 CHECK OPEN/OPEN 1-BRS-V-468, BRS-CS-7992 DEGAS. RECIRC. BRS-V-468.

_____/_____ 6.1.12.10 CHECK CLOSED 1-BRS-V-407, DEGAS DISCH & RECIRC VLV V-407 POSITION. (1-BRS-V-407 is operated by the control switch for 1-BRS-V-468).

_____/_____ 6.1.13 CHECK the color graphic for shutdown cooling is displayed on MCB (1SDC1 is the turn on code).

_____/_____ 6.1.14 MONITOR and RECORD RCS levels every 15 minutes on Form B, RCS Reduced Inventory Water Level Log (Protected: Ref. 2.13)

CAUTION

1. The reactor coolant system level must **not** go below minus 81.5 inches, minimum level for 3,500 gpm RHR flow.
2. RHR pump operations should be monitored for signs of air entrainment during RCS draining.

_____/_____6.1.15 COMPLETE Form A, RCS Reduced Inventory/Midloop Operation Shift Checklist, once per shift.

NOTE

The following step will enable the MPCS software which updates the following points:

- B7720, MID LOOP RCS TEMP HIGH
- C0820, RCS MAX THERMOCOUPLE TEMP

_____/_____6.1.16 Using the MPCS turn on code MIDLOOP, ENABLE the midloop condition alarm.

_____/_____6.1.17 STATION an Operator, in communication with the Control Room, at the RCS sight glass to locally monitor level. MAINTAIN the Operator at the sight glass until level is stable and displayed in the Control Room.

_____/_____6.1.18 STATION an Operator in the running train RHR vault to listen for cavitation. MAINTAIN an Operator in the vault until RCS level is greater than minus 36 inches.

CAUTION

1. Excessive drain rates may cause a level disagreement between the level transmitters. Monitor the drain rate to ensure that all required level indicators agree within 15 inches. If level agreement exceeds 15 inches STOP the drain down. Do **not** resume draining until level agrees within 14 inches.

2. RC-PT-403 and RC-PT-405 will probably **not** be available during this phase of the outage.

NOTE

The Shift Manager may permit continuing with the procedure with one of the three narrow range level detectors out of service.

_____/_____6.1.19 INCREASE RHR letdown flow to drain the RCS to minus 71 inches, if level instruments do **not** agree within 15 inches, STOP draining.

_____/_____ 6.1.19.1 NOTIFY I&C that vessel level will be held at minus 70 inches so they may adjust the threshold value of the ultrasonic level detectors (about one hour and fifteen minutes from this point), if desired.

_____/_____6.1.20 MONITOR RCS sightglass level and RC-LI-9467 during draining.

NOTE

The following step is to be used as an additional aid for the operator. The data recorded is **not** quality data. It does **not** have to be recorded in this procedure.

6.1.21 If the RCS drain rate needs to be confirmed, PERFORM the following:

_____/_____ 6.1.21.1 ALLOW the VCT to fill to greater than 45% level.

_____/_____ 6.1.21.2 RECORD the following parameters:

- VCT level (A0624)
- PDT level (A0084) OR RWST level (A0913)
- Time

_____/_____ 6.1.21.3 PLACE CS-LK-185, VCT DIVERT CONTROL in MANUAL.

☐ 6.1.21.4 Slowly LOWER the CS-LK-185 output to 0%.

_____/_____ 6.1.21.5 When VCT level has lowered by 10%, RECORD the following parameters:

- VCT level (A0624)
- PDT level (A0084) OR RWST level (A0913)
- Time

☐ 6.1.21.6 Slowly ADJUST the CS-LK-185, VCT DIVERT CONTROL output to 100%.

☐ 6.1.21.7 PLACE CS-LK-185 in AUTO.

_____/_____ 6.1.21.8 PLACE the control switch for CS-LCV-112A and CS-LV-112A to the AUTO position.

_____/_____ 6.1.21.9 CALCULATE the RCS addition rate (in gallons per minute) as follows:

$$\frac{\text{Initial VCT level (\%) - Final VCT level (\%)}}{\text{Final time (min) - Initial time (min)}} \times \frac{\text{31.14 gallons}}{\text{1\%}}$$

_____/_____ 6.1.21.10 CALCULATE the RCS letdown rate (in gallons per minute) as follows:

$$\frac{\text{Final PDT level (ft) - Initial PDT level (ft)}}{\text{Final time (min) - Initial time (min)}} \times \frac{\text{706 gallons}}{\text{1 ft}}$$

OR

$$\frac{\text{Initial RWST level (gallons) - Final RWST level (gallons)}}{\text{Final time (min) - Initial time (min)}}.$$

_____/_____ 6.1.21.11 CALCULATE the RCS drain rate (in gallons per minute) as follows:

RCS letdown rate (gpm) - RCS addition rate (gpm)
(Step 6.1.22.7) (Step 6.1.22.6)

$$\frac{\text{Initial VCT level (\%) - Final VCT Level (\%)}}{\text{Final time (min) - Initial time (min)}} \times \frac{\text{31.14 gallons}}{\text{1\%}}$$

$$\frac{\text{Final PDT level (ft) – Initial PDT level (ft)}}{\text{Final time (min) – Initial time (min)}} \times \frac{\text{706 gallons}}{\text{1 ft}}$$

RCS letdown rate (gpm) _ RCS addition rate (gpm)
(Step6.1.21.7) (Step 6.1.21.6)

NOTE

1. Draining the Reactor Coolant System below the minus 71 inch height (minus 5 feet 11 inches) will result in the draining of the steam generator U tubes. Erratic level indication will occur as the U tubes break vacuum and water flows into the reactor vessel. RC-LIT-9467 and the sight glass may lower to -74 inches before the loop seal is broken and RC-LM-9465 and RC-LM-9466 show hot leg level lowering.

2. The following RCS level instruments are considered narrow range Midloop level detectors:

   - RC-LM-9465, RCS Loop 1 Ultrasonic Level Instrument
   - RC-LM-9466, RCS Loop 4 Ultrasonic Level Instrument
   - RC-LIT-9467, Rx Vessel Narrow Range Level

_____/_____ 6.1.22 NOTIFY I&C to adjust the threshold values on the ultrasonic level detectors if required.

_____/_____ 6.1.22.1 STABILIZE vessel level at minus 70 inches (-69 to -71).

_____/_____ 6.1.23 CONTINUE draining after I&C reports that any desired adjustment of the ultrasonic level detectors is complete.

_____/_____ 6.1.24 When less than minus 71 inches, MONITOR RCS level.

6.1.24.1 If narrow range Midloop level detectors do **not** agree within 15 inches, STOP draining. Do **not** resume draining until level agrees within 14 inches.

_____/_____ 6.1.25 CONTINUE reactor coolant system drain to minus 73.5 inches.

NOTE

RCS level may have to be lowered to less than minus 73.5 inches to break the loop seal with the steam generators.

All operable narrow range level indications **shall** be within the minus 72 to minus 78 inch band.

Opening the channel head drain for the steam generator to be entered may also permit air to enter and break the loop seal from the steam generator.

_____/_____ 6.1.26 STABILIZE RCS level at minus 73.5 inches, (minus 72.0 inches to minus 78.0 inches). (Protected: Ref. 2.22)

_____/_____ 6.1.27 The sight glass watch may be released if the sight glass level is displayed in the Control Room. MAINTAIN an Operator in the running train RHR vault.

_____/_____ 6.1.28 INFORM the OCC that the reactor vessel level has been lowered and maintenance may drain the channel heads, install or remove nozzle dams per the schedule.

6.1.29 IF the letdown divert path was aligned to the RWST for the drain down perform the following:

_____/_____ 6.1.29.1 OPEN 1-BRS-V-1, BRS-DM-13A CRIE INLET VALVE, OR OPEN 1-BRS-V-60, BRS-DM-13B CRIE INLET VALVE.

_____/_____ 6.1.29.2 CLOSE 1-CS-V-499, BRS Makeup From Boric Acid Blender.

_____/_____ 6.1.29.3 CLOSE 1-CS-V-444, RWST Makeup From Boric Acid Blender.

_____/_____ 6.1.29.4 INFORM the waste watch that the CRIE demins are available for use.

_____/_____ 6.1.29.5 SHUT DOWN the Letdown Degasifier per OS1002.04, Operations Of The Letdown Degasifier.

6.2 Operate The Plant With RCS At Reduced Inventory Or Midloop Conditions

CAUTION

If cavitation is indicated, RHR flow may be reduced to 2,750 gpm. If stable conditions are **not** obtained by flow reduction, the standby RHR pump must **not** be started.

_____/_____6.2.1 MAINTAIN RCS temperature between 100 to 140°F.

_____/_____6.2.2 VENT operating and non operating RHR pumps once per shift. DOCUMENT on Form A, RCS Reduced Inventory/Midloop Operations Shift Checklist.

_____/_____6.2.3 MAINTAIN RCS level at minus 73.5 inches, (minus 72 inches to minus 78 inches).

CAUTION

Charging and Letdown flow should be slowly adjusted to minimize RCS perturbations.

_____/_____6.2.4 CHECK OPEN/OPEN CS-V-142 and CS-V-143, charging to regenerative heat exchanger isolations.

_____/_____6.2.5 ADJUST charging and RHR letdown flow as necessary to maximize CVCS purification.

NOTE

Air entrainment is the initial step in a complete loss of RHR cooling due to cavitation. RHR air entrainment is identified by an increased level trend without any change in RCS inventory and/or noise at the RHR pump.

_____/_____6.2.6 If air entrainment occurs, INCREASE RCS inventory or REDUCE RHR flow rate to prevent a complete loss of RHR cooling as directed by the US.

_____/_____6.2.7 If loss of RHR flow occurs, go to OS1213.02, Loss Of RHR While Operating At Reduced Inventory/Midloop Conditions.

_____/_____6.2.8 Once per shift, COMPLETE Form A, RCS Reduced Inventory/Midloop Operation Shift Checklist.

6.3 Restore RCS Level To Between Minus 6 And Minus 30 To Inches

_____/_____ 6.3.1 CHECK with the OCC that any maintenance activity requiring midloop operation is complete and RCS integrity has been restored to allow filling the RCS to the vessel flange.

_____/_____ 6.3.2 ADJUST charging and RHR letdown as desired.

> **NOTE**
>
> Makeup may remain aligned to the VCT if we need to improve RCS water quality, (silica in the RWST, etc.)

6.3.3 ALIGN charging pump suction to the RWST as follows:

6.3.3.1 OPEN the following valves:

_____/_____ • CS-LCV-112D, RWST to charging pump suction header

_____/_____ • CS-LCV-112E, RWST to charging pump suction header

6.3.3.2 When RWST suction valves are full open, CLOSE the following valves:

_____/_____ • CS-LCV-112B, charging pump suction from VCT

_____/_____ • CS-LCV-112C, charging pump suction from VCT

_____/_____ 6.3.4 CLOSE CS-HCV-128, RHR letdown flow control valve.

_____/_____ 6.3.5 CHECK OPEN/OPEN CS-V-142 and CS-V-143, charging to regenerative heat exchanger isolations.

6.3.6 RAISE RCS level as follows:

_____/_____ • INCREASE charging flow as directed by the US

_____/_____ • MAINTAIN 6 to 13 gpm seal injection flow to all RCP seals.

NOTE

A rapid fill with the Reactor Vessel Head in place may trap air under the vessel head. This may result in a charging/letdown mismatch until the air slowly vents.

6.3.7 When RCS level approaches the desired level (between minus 6 to minus 30 inches), ALIGN the charging pump suction to the VCT as follows:

6.3.7.1 OPEN the following valves:

_____/_____ • CS-LCV-112B , charging pump suction from VCT

_____/_____ • CS-LCV-112C, charging pump suction from VCT

6.3.7.2 When VCT suction valves are full open, CLOSE the following valves:

_____/_____ • CS-LCV-112D, RWST to charging pump suction header

_____/_____ • CS-LCV-112E, RWST to charging pump suction header

6.3.8 Independently VERIFY the following valves are in their stated position:

_____/_____ (IV) • CS-LCV-112B, charging pump suction from VCT, open

_____/_____ (IV) • CS-LCV-112C, charging pump suction from VCT, open

_____/_____ (IV) • CS-LCV-112D, RWST to charging pump suction header, closed

_____/_____ (IV) • CS LCV-112E, RWST to charging pump suction header, closed

_____/_____ 6.3.9 ADJUST RHR letdown flow using CS-HCV-128, RHR letdown flow control valve, as needed to stabilize RCS level.

_____/_____ 6.3.10 RACK OUT and LOCK the following breakers:

- SI-P-6A, (bus 5, node A56)
- SI-P-6B, (bus 6, node A76)

_____/_____ 6.3.11 NOTIFY I&C to remove the following from service:

- RH-PT-2585, RHR pump A suction pressure transmitters
- RH-PT-2586, RHR pump B suction pressure transmitters

6.3.12 REMOVE the following MPCS point from SCAN:

_____/_____ • A0213, RH PUMP 8A SUCTION PRESSURE

_____/_____ • A0214, RH PUMP 8A SUCTION PRESSURE

_____/_____ • B5889, RHR PUMP A SUCTION PRESSURE LOW

_____/_____ • B5890, RHR PUMP B SUCTION PRESSURE LOW

_____/_____ 6.3.13 Using the MPCS turn on code MIDLOOP, DISABLE the midloop condition alarm.

7. FINAL CONDITIONS

7.1 The plant is in MODE 5 or 6 with:

- RCS temperature 100°F to 140°F
- RCS water level between minus 6 and minus 30 inches
- Charging and seal injection in service
- Normal RHR shutdown cooling flow

8. ACCEPTANCE CRITERIA

Not applicable to this procedure.

9. SUMMARY OF CHANGES

9.1 Rev. 04: This procedure was revised in accordance with MNPR, PR 3.2. (August 2003)

- Incorporated lessons learned from OS1000.14.

9.2 Rev. 04 Chg. 01 (September 2003)

- Added steps 4.1.22.3, 4.1.22.4, 4.1.22.6 and 4.1.22.7 to prevent water hammer and pressure transients in the letdown system during demineralizer flushes.

9.3 Rev. 04 Chg. 02 (September 2003)

- Removed the time to core uncovery graphs and incorporated comments from Oversight.
- Also added a new prerequisite for ODI.81.

9.4 Rev. 04 Chg. 03 (October 2003)

- Corrected the flow rate value that was missed during proof reading revision 04. Step 6.1.10.4 flow rate was changed from 3,500 gpm to 2,900 gpm.

9.5 Rev. 04 Chg. 04 (October 2003)

- Incorporated into change 06.
- Changed method to prevent pump vortexing due to high flow caused by loss of instrument air to RHR temperature control valve. HCV handjack method is being replaced with requirement to maintain level above minus 78 inches to prevent vortexing concern (intent change). In addition changed Tech. Spec. 3.1.2.5 to TR 29-3.1.2.5 in Prerequisite 3.6 (non-intent change).

9.6 Rev. 04 Chg. 05 (October 2003)

- Incorporated into change 06.
- Establish consistent level agreement requirements.

9.7 Rev. 04 Chg. 06 (October 2003)

- Added method to open normal charging discharge header valves to support RCS fill after nozzle dams are installed.
- Added method to increase RHR letdown to support RCS clean-up efforts.

9.8 Rev. 04 Chg. 07 (October 2003)

- Tech clarification #162 has been incorporated into the bases of the Technical Specifications, Figure 9 sheet 1 of 2 step 3.0.

9.9 Rev. 04 Chg. 08 (March 2004)

- Updated NSSS elevations/primary component heights Figure 2.

9.10 Rev. 04 Chg. 09 (July 2004)

- Updated drawing RHRFLOW3 (Figure 7) to show the unacceptable operating range of flow up to the minimum level with nozzle dams installed. Changed the minimum operating level with nozzle dams installed from 79 inches to 78 inches. Refer to CR's 03-08681 and 03-09094.

9.11 Rev. 04 Chg. 10 (April 2005)

- Figures 3 & 4: Revised to Stretch Power Uprate values per DCR 03-012.

9.12 Rev. 04 Chg. 11 (April 2005)

- Changed level agreement to latest change in OS1000.14 RCS Evacuation And Fill.
- Changed the required number of core exit thermocouples to two per train. This will ensure compliance with generic letter 88-17 if one of the thermocouples should fail.
- Added precaution 4.14 that any changes to this document should receive an engineering review. (Ref. SOER 9-1)
- Changed 5.7 to permit having reactor coolant pump(s) on it's back seat and not supply seal injection to the back seated pump.
- Added more specific guidance to the caution before step 6.1.19. STOP draining if level does not agree within 15 inches. Do not resume draining until level agrees with 14 inches. (CR 03-08775)
- Added Note prior to step 6.3.3 that makeup may remain aligned to the VCT if we need to improve RCS water quality, (silica in the RWST etc).
- Added Note before step 6.3.7 to capture lessons learned from OR09. (CR 03-08775)
- Added a column to Form B: RCS Reduced Inventory Water Level Log to document the maximum differnece in level for each reading. (CR 03-08775)
- Added Attachment 5, Briefing Handout at the request of past participants.

Figure 1: RC-LT-9405 Spool Piece Alignment For Vessel Head Removal

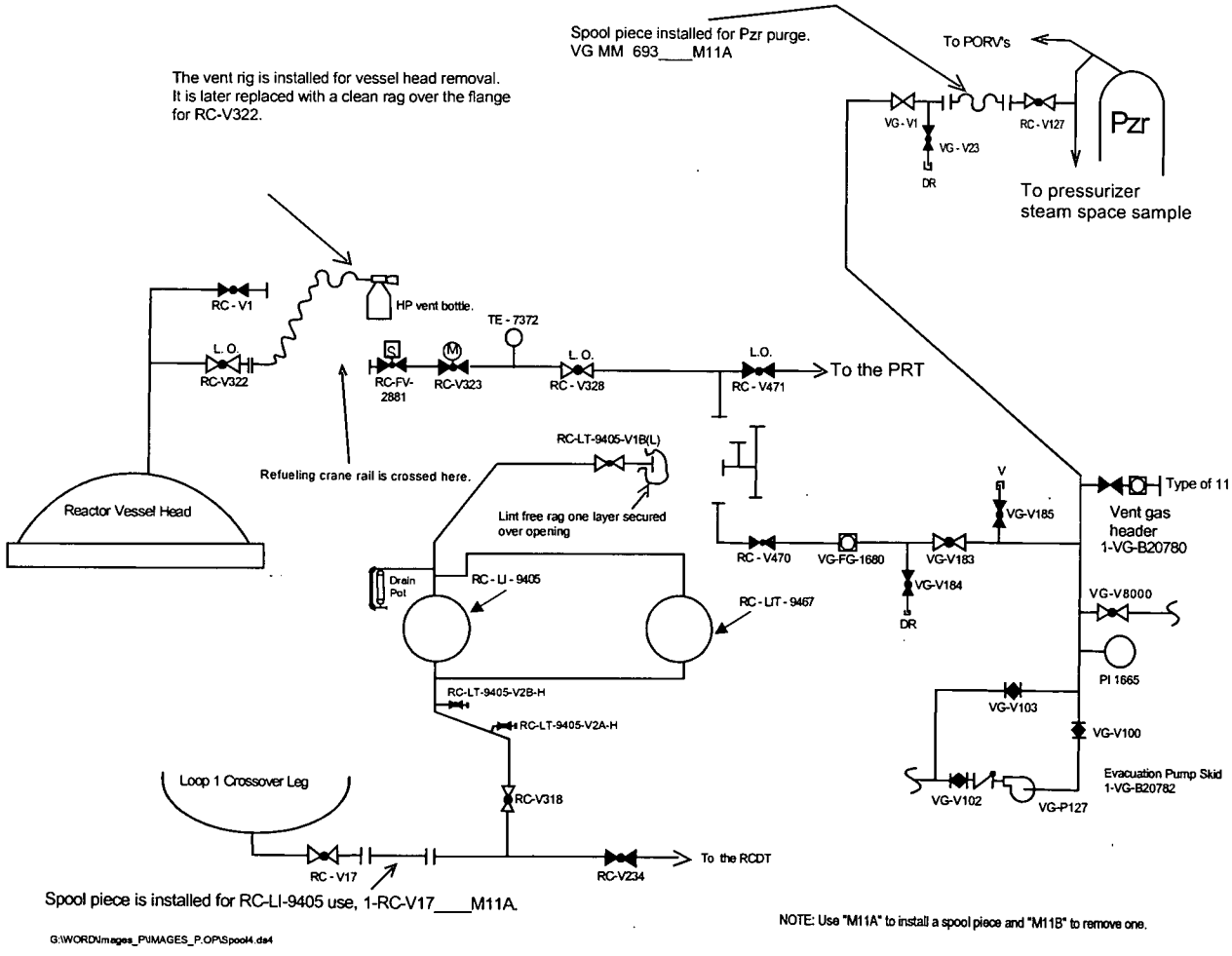

Figure 2: Primary Component Heights

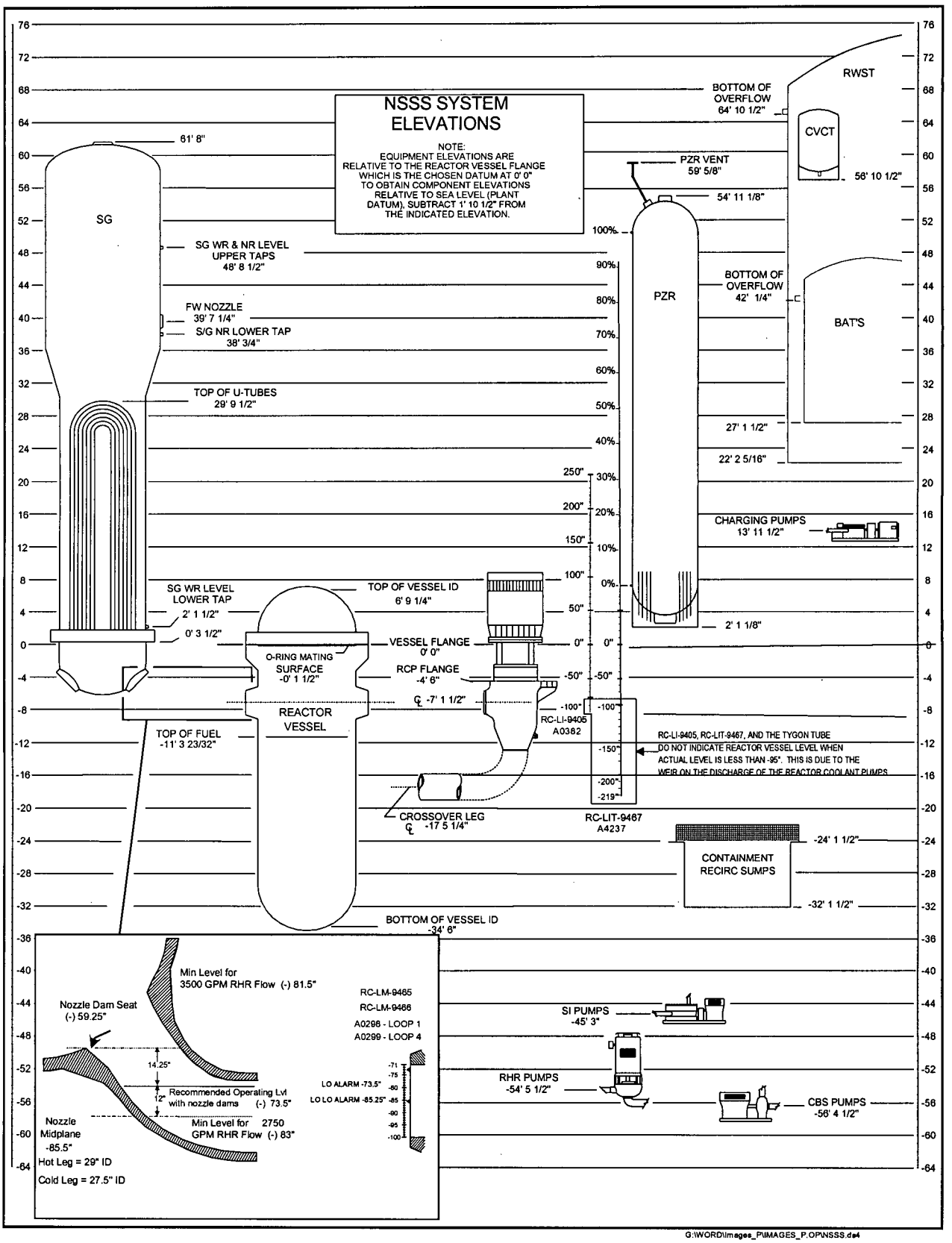

Figure 3: Time To Boiling Vs. Time After Shutdown For RCS Water Level At Reduced Inventory (Minus 36 inches)

C A U T I O N

The best estimate of time to boil is provided by Reliability and Safety Engineering (War Room). The graph below provides conservative time to boil values and should only be used if **no** other information is available.

NOTE

The temperatures (i.e. 100°F, 120°F, 140°F, etc.) for the different curves refer to initial RCS temperature at the time that loss of RHR cooling occurs. All curves assume atmospheric pressure at onset of boiling.

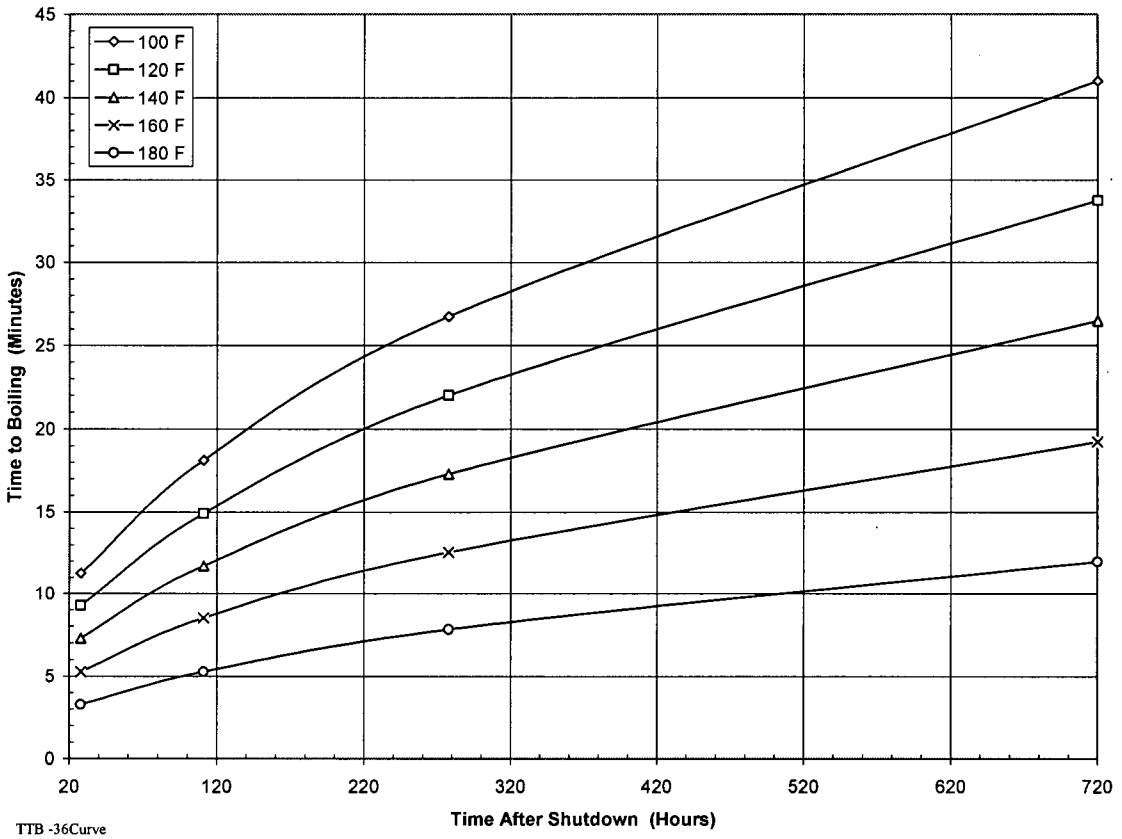

Figure 4: Time To Boiling Vs. Time After Shutdown For RCS Water Level At Midloop

CAUTION

The best estimate of time to boil is provided by Reliability and Safety Engineering (War Room). The graph below provides conservative time to boil values and should only be used if **no** other information is available.

NOTE

The temperatures (i.e., 100°F, 120°F, 140°F, etc.) for the different curves refer to initial RCS temperature at the time that loss of RHR cooling occurs. All curves assume atmospheric pressure at onset of boiling.

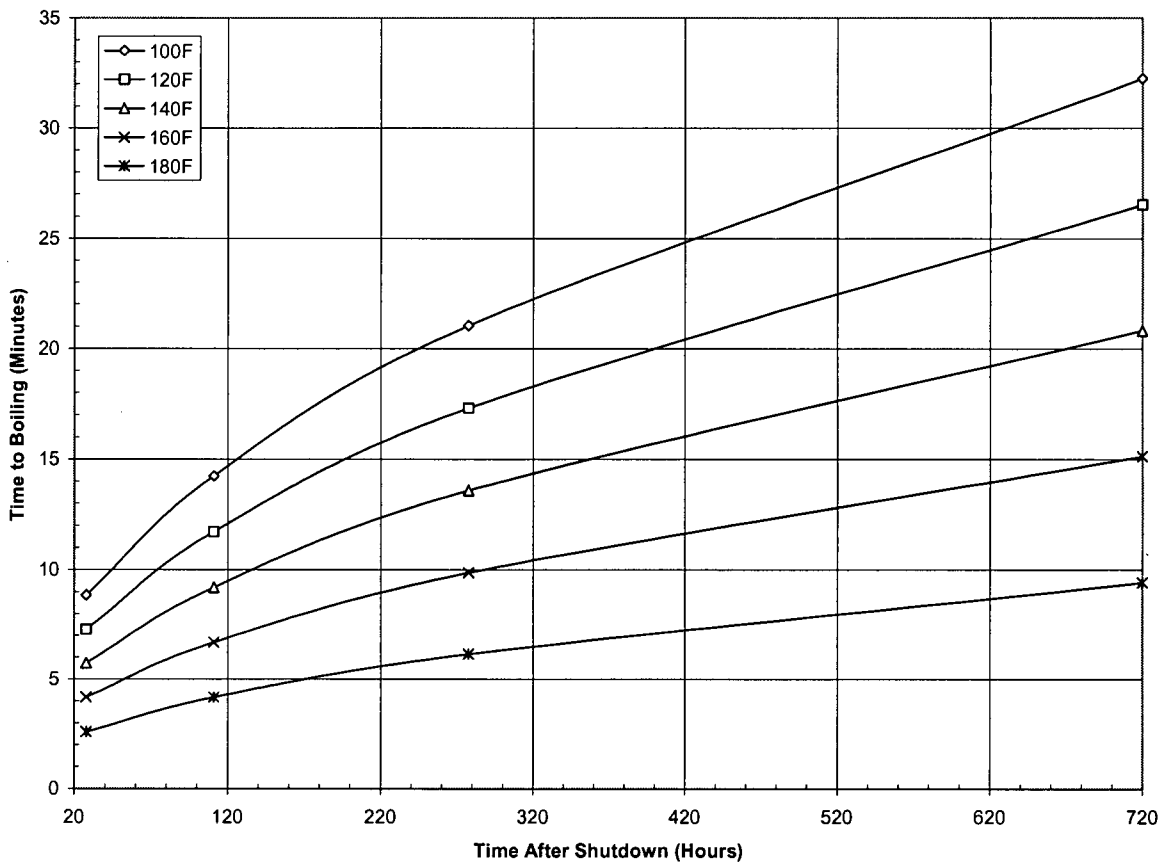

Figure 5: Components That May Affect The RCS

(Sheet 1 of 7)

Mechanical

CS-FCV-121	Charging Flow Control Valve
CS-FV-7456	Letdown Degassifier Divert Valve
CS-HCV-123	Excess Letdown Flow Control Valve
CS-HCV-182	Charging Flow Control Valve
CS-HCV-189	Letdown Drag Valve
CS-HCV-190	Letdown Drag Valve
CS-LCV-112A	VCT Divert Valve
CS-LCV-112B	VCT Isolation Valve
CS-LCV-112C	VCT Isolation Valve
CS-LV-112A	Letdown Degassifier Return Divert Valve
CS-PCV-131	Letdown Pressure Control Valve
CS-TCV-129	CS Demin Divert Valve
CS-TCV-381	Temperature Control Valve
CS-V-10	Seal Return Isolation Valve to RCP-1A
CS-V-28	Seal Return Isolation Valve to RCP-1B
CS-V-44	Seal Return Isolation Valve to RCP-1C
CS-V-59	Seal Return Isolation Valve to RCP-1D
CS-V-78	Reactor Coolant Filter Vent Valve
CS-V-109	Demin Pre-filter Vent Valve
CS-V-112	Demin Pre-filter Drain Valve
CS-V-121	Seal Injection Filter 4B Vent
CS-V-124	Seal Injection Filter 4B Drain
CS-V-125	Seal Injection Filter 4A Vent
CS-V-128	Seal Injection Filter 4A Drain
CS-V-131	Seal Return Filter F-3 Vent
CS-V-135	Seal Return Filter F-3 Drain
CS-V-138	Isolation Valve for CS-HCV-182
CS-V-140	Isolation Valve for CS-HCV-182
CS-V-141	Bypass Valve for CS-HCV-182
CS-V-142	Charging Isolation Valve
CS-V-143	Charging Isolation Valve
CS-V-145	Regenerative Heat Exchanger Isolation
CS-V-149	Inboard Isolation Valve
CS-V-150	Outboard Isolation Valve
CS-V-154	Seal Injection Isolation to RCP-1D
CS-V-158	Seal Injection Isolation to RCP-1C
CS-V-166	Seal Injection Isolation to RCP-1A
CS-V-168	Seal Return Inboard Isolation Valve
CS-V-175	Outboard Excess Letdown Isolation Valve
CS-V-176	Inboard Excess Letdown Isolation Valve
CS-V-177	Loop 4 Charging Valve
CS-V-180	Loop 1 Charging Valve
CS-V-185	Alternate Spray Valve
CS-V-189	VCT Drain Valve
CS-V-202	PDP Casing Drain

Figure 5: Components That May Affect The RCS

(Sheet 2 of 7)

Mechanical

CS-V-207	CP-P-2A Suction Isolation
CS-V-210	CS-P-2A Discharge Isolation
CS-V-215	PDP Discharge Isolation Valve
CS-V-217	CP-P-2B Suction Isolation
CS-V-220	CS-P-2B Discharge Isolation
CS-V-222	CS-FCV-121 Isolation Valve
CS-V-224	CS-FCV-121 Isolation Valve
CS-V-321	Letdown HX Isolation Valve
CS-V-325	Isolation for CS-PCV-131
CS-V-326	Isolation for CS-PCV-131
CS-V-328	Bypass Valve for CS-PCV-131
CS-V-330	Isolation Valve for CS-TCV-381
CS-V-346	Isolation Valve for CS-TCV-381
CS-V-362	Seal Injection Isolation to RCP-1B
CS-V-470	Bypass Valve for CS-TCV-381
CS-V-500	CS Vent/Test Connector
CS-V-502	CS to RH/SI Return Valve
CS-V-503	Isolation Valve for Letdown Degas Divert Valve
CS-V-507	CS Drain Valve
CS-V-509	CS Drain Valve
CS-V-513	CS Drain Valve
CS-V-516	CS Drain Valve
CS-V-548	CS Drain Valve/Test Connection
CS-V-553	CS Drain Valve/Test Connection
CS-V-555	CS Vent Valve/Test Connection
CS-V-556	CS Vent Valve/Test Connection
CS-V-565	Regenerative Heat Exchanger Drain Valve
CS-V-569	CS Drain Valve
CS-V-573	Excess Letdown HX Vent Valve
CS-V-574	Excess Letdown HX Drain Valve
CS-V-579	CS Drain Valve
CS-V-592	CS Drain Valve/Test Connection
CS-V-602	CP-P-2A Casing Drain
CS-V-609	CP-P-2B Casing Drain
CS-V-633	Isolation Valve for Letdown Degas Divert Valve
CS-V-690	CS Drain Valve
CS-V-694	CS Drain Valve
CS-V-700	Letdown Degassifier Return Isolation Valve
CS-V-760	CS Drain Valve
CS-V-805	CS Vent Valve
CS-V-815	CS Drain Valve
CS-V-819	CS Vent Valve
CS-V-836	CS Vent Valve
CS-V-837	CS Drain Valve
CS-V-856	CS Vent Valve

Figure 5: Components That May Affect The RCS

(Sheet 3 of 7)

Mechanical

CS-V-884	CS Vent Valve
CS-V-885	CS Vent Valve
CS-V-998	PDP Suction Stabilizer Vent
CS-V-999	PDP Suction Stabilizer Drain
CS-V-1159	CS Vent Valve
CS-V-1160	CS Vent Valve
CS-V-1161	CS Vent Valve
CS-V-1172	Excess Letdown Vent Valve
CS-V-1190	Reactor Coolant Filter Drain Valve
RC-V-2	Isolation Valve to Sample System
RC-V-14	Isolation Valve to RC-FT-416
RC-V-15	Isolation Valve to RC-FT-415
RC-V-16	Isolation Valve to RC-FT-414
RC-V-17	Isolation Valve to RCDT Pumps
RC-V-20	Isolation Valve to Common Reference Leg
RC-V-21	Vent Valve on RH Suction Line
RC-V-22	Loop Isolation Valve
RC-V-23	Loop Isolation Valve
RC-V-46	Isolation Valve to RC-FT-426
RC-V-47	Isolation Valve to RC-FT-425
RC-V-48	Isolation Valve to RC-FT-424
RC-V-49	Isolation Valve to Common Reference Leg
RC-V-51	Isolation Valve to RCDT Pumps
RC-V-56	Isolation Valve to Sample System
RC-V-59	Instrument Root Valve to RC-PI-404
RC-V-68	Isolation Valve to RC-FT-436
RC-V-69	Isolation Valve to RC-FT-435
RC-V-70	Isolation Valve to RC-FT-434
RC-V-71	Isolation Valve to Common Reference Leg
RC-V-80	Isolation Valve to RCDT Pumps
RC-V-86	Isolation Valve to RC-PI-402
RC-V-87	Loop Isolation Valve
RC-V-88	Loop Isolation Valve
RC-V-103	Isolation Valve to RC-FT-446
RC-V-104	Isolation Valve to RC-FT-445
RC-V-105	Isolation Valve to RC-FT-444
RC-V-106	Isolation Valve to Common Reference Leg
RC-V-140	RH Train A Drain
RC-V-141	RH Train B Drain
RC-V-153	Isolation Valve to PI-601, PI-2585
RC-V-154	Isolation Valve to PI-602, PT-2586
RC-LCV-459	Letdown Isolation
RC-LCV-460	Letdown Isolation
RC-V-463	Vent Valve on RH Suction Line
RC-V-465	Vent Valve on RVLIS Line

Figure 5: Components That May Affect The RCS

(Sheet 4 of 7)

Mechanical

RC-V-466	Vent Valve on RVLIS Line
RC-V-473	RH Train A High Point Vent
RC-V-474	High Point Vent
RH-V-7	Isolation Valve for PT-614
RH-V-8	RH Train A Sample Valve
RH-V-13	Isolation Valve for PT-615
RH-V-14	A Train RH Cold Leg Isolation
RH-V-26	B Train RH Cold Leg Isolation
RH-V-27	Test Line Header
RH-V-28	Valve Seat Leakage Test Header
RH-V-32	Hot Leg Injection Line Isolation
RH-V-33	RH Common Return Line
RH-V-36	SI Function Valve
RH-V-44	RH Sample Valve
RH-V-49	Test Isolation Valve
RH-V-54	Test Isolation Valve Loop 1
RH-V-55	Test Isolation Valve Loop 4
RH-V-70	Hot Leg Injection Line Isolation
RH-V-78	RH Heat Exchanger Drain Valve
RH-V-79	RH Heat Exchanger Drain Valve
RH-V-80	RH Heat Exchanger Drain Valve
RH-V-86	RH Heat Exchanger Drain Valve
RH-V-87	RH Heat Exchanger Drain Valve
RH-V-88	RH Heat Exchanger Drain Valve
RH-V-104	RH Drain Valve
RH-V-105	RH Drain Line
RH-V-106	RH Drain Valve
RH-V-107	RH Drain Valve
RH-V-113	RH Drain Valve
RH-V-115	RH Drain Line
RH-V-116	RH Drain Valve
RH-V-117	RH Drain Valve
RH-V-120	RH Drain Valve
RH-V-121	RH Drain Valve on Pump Discharge Line
RH-V-122	RH Drain Valve on Letdown Line
RH-V-128	RH Letdown Valve
RH-V-132	RH Vent Valve
RH-V-138	RH Vent Valve
RH-V-139	RH Drain Valve
RH-V-164	RH Vent Valve
RH-V-165	RH Drain Valve
RH-V-175	Seal Cooler Vent Valve
RH-V-176	Seal Cooler Vent Valve
RH-V-177	Seal Cooler Vent Valve
RH-V-178	Seal Cooler Vent Valve
SI-V-138	High Head Injection Valve
SI-V-139	High Head Injection Valve

Figure 5: Components That May Affect The RCS

(Sheet 5 of 7)

Electrical

Component	Breaker/Control Location	Description
CBS-V-2	E521	CBS-V2 BKR
CBS-V-5	E621	CBS-V5 BKR
CBS-V-8	E521	CBS-V8 BKR
CBS-V-14	E621	CBS-V14 BKR
CS-CV-1	CP-126	Degassifier control Panel
CS-FCV-110A	terminal box	node YB5
CS-FCV-110B	terminal box	node YB5
CS-FV-7456	CP-126	Degassifier control panel
CS-HCV-123	MM-1R-8	instrument rack
CS-HCV-128	MM-1R-18B	instrument rack
CS-HCV-182	MM-1R-17	instrument rack
CS-HCV-189	E531	CS-HCV-189 BKR
CS-HCV-190	E631	CS-HCV-190 BKR
CS-HCV-387	MM-1R-18B	instrument rack
CS-LCV-112A	MCB	VCT Divert Valve
CS-LCV-112B	E512	CS-LCV-112B BKR
CS-CV-112C	E612	CS-LCV-112C BKR
CS-LCV-112D	E512	CS-LCV-112D BKR
CS-LCV-112E	E612	CS-LCV-112E BKR
CS-TCV-129	MM-1R-19A	instrument rack
CS-TCV-381A	MM-1R-18A	RX aux relay rack - 3 NI-CP-11
CS-TCV-381B	MM-1R-18A	RX aux relay rack - 3 NI-CP-11
CS-V-10	MM-1R-1	instrument rack
CS-V-28	MM-1R-2	instrument rack
CS-V-44	MM-1R-3	instrument rack
CS-V-59	MM-1R-4	instrument rack
CS-V-142	E512	CS-V142 BKR
CS-V-143	E612	CS-V143 BKR
CS-V-145	MM-IR-4	instrument rack
CS-V-149	E512	CS-V149 BKR
CS-V-154	E512	CS-V154 BKR
CS-V-158	E512	CS-V158 BKR
CS-V-162	E512	CS-V162 BKR
CS-V-166	E512	CS-V166 BKR
CS-V-167	E512	CS-V167 BKR
CS-V-168	E612	CS-V168 BKR
CS-V-170	MM-1R-4	instrument rack
CS-V-175	MM-1R-4	instrument rack
CS-V-176	MM-R-4	instrument rack
CS-V-177	MM-R-4	instrument rack
CS-V-180	MM-IR-4	instrument rack
CS-V-185	MM-IR-4	instrument rack
CS-V-196	E512	CS-V196 BKR

Figure 5: Components That May Affect The RCS

(Sheet 6 of 7)

Electrical

Component	Breaker/Control Location	Description
CS-V-197	E612	CS-V197 BKR
CS-V-205	E122	CS-V205 BKR
CS-V-256	MM-IR-18A	instrument rack
CS-V-261	MM-IR-18A	instrument rack
CS-V-268	MM-IR-18A	instrument rack
CS-V-273	MM-IR-18A	instrument rack
CS-V-279	MM-IR-18A	instrument rack
CS-V-282	MCB	BTRS Bypass
CS-V-293	MM-IR-18A	RX aux relay rack 3 NI-CP-11
CS-V-294	MM-IR-18A	RX aux relay rack 3 NI-CP-11
CS-V-299	MM-IR-18A	RX aux relay rack 3 NI-CP-11
CS-V-301	MM-IR-18A	RX aux relay rack 3 NI-CP-11
CS-V-306	MM-IR-18A	RX aux relay rack 3 NI-CP-11
CS-V-310	MM-IR-18A	RX aux relay rack 3 NI-CP-11
CS-V-311	MM-IR-18A	RX aux relay rack 3 NI-CP-11
CS-V-312	MM-IR-18A	RX aux relay rack 3 NI-CP-11
CS-V-426	E612	BKR
CS-V-460	E512	BKR
CS-V-461	E612	BKR
CS-V-475	E612	BKR
CS-V-633	E631	BKR
CS-V-750	CP-126	Degassifier control panel
CS-V-838	CP-126	Degassifier control panel
RC-V-87	E621	V87 BKR
RC-V-22	E621	V22 BKR
RC-V-23	E521	V23 BKR
RC-V-88	E521	V88 BKR
RC-LCV-459	MM-1R-4	instrument rack
RC-LCV-460	MM-1R-3	instrument rack
RH-V-14	E522	V14 BKR
RH-V-21	E621	V21 BKR
RH-V-22	E521	V22 BKR
RH-V-26	E622	V26 BKR
RH-V-32	E622	V32 BKR
RH-V-35	E521	V35 BKR
RH-V-36	E621	V36 BKR
RH-V-70	E522	V70 BKR
SI-V-89	E521	V89 BKR
SI-V-90	E521	V90 BKR
SI-V-93	E621	V93 BKR
SI-V-102	E522	SI-V102 BKR
SI-V-138	E521	SI-V138 BKR
SI-V-139	E621	SI-V139 BKR
SW-V-2	E514	V2 BKR

Figure 5: Components That May Affect The RCS

(Sheet 7 of 7)

Electrical

Component	Breaker/Control Location	Description
SW-V-15	E512	V15 BKR
SW-V-7	E612	V17 BKR
SW-V-19	E612	V19 BKR
SW-V-20	E512	V20 BKR
SW-V-22	E514	V22 BKR
SW-V-25	E641	V25 BKR
SW-V-29	E614	V29 BKR
SW-V-31	E614	V31 BKR
SW-V-44	MCC 271	V44 BKR
SW-V-46	MCC 271	V46 BKR
SW-V-54	E513	V54 BKR
SW-V-56	E513	V56 BKR
SW-V-63	MCC 271	V63 BKR
SW-V-64	MCC 271	V64 BKR

Figure 6: Steam Generator Nozzle Hot Leg Elevations

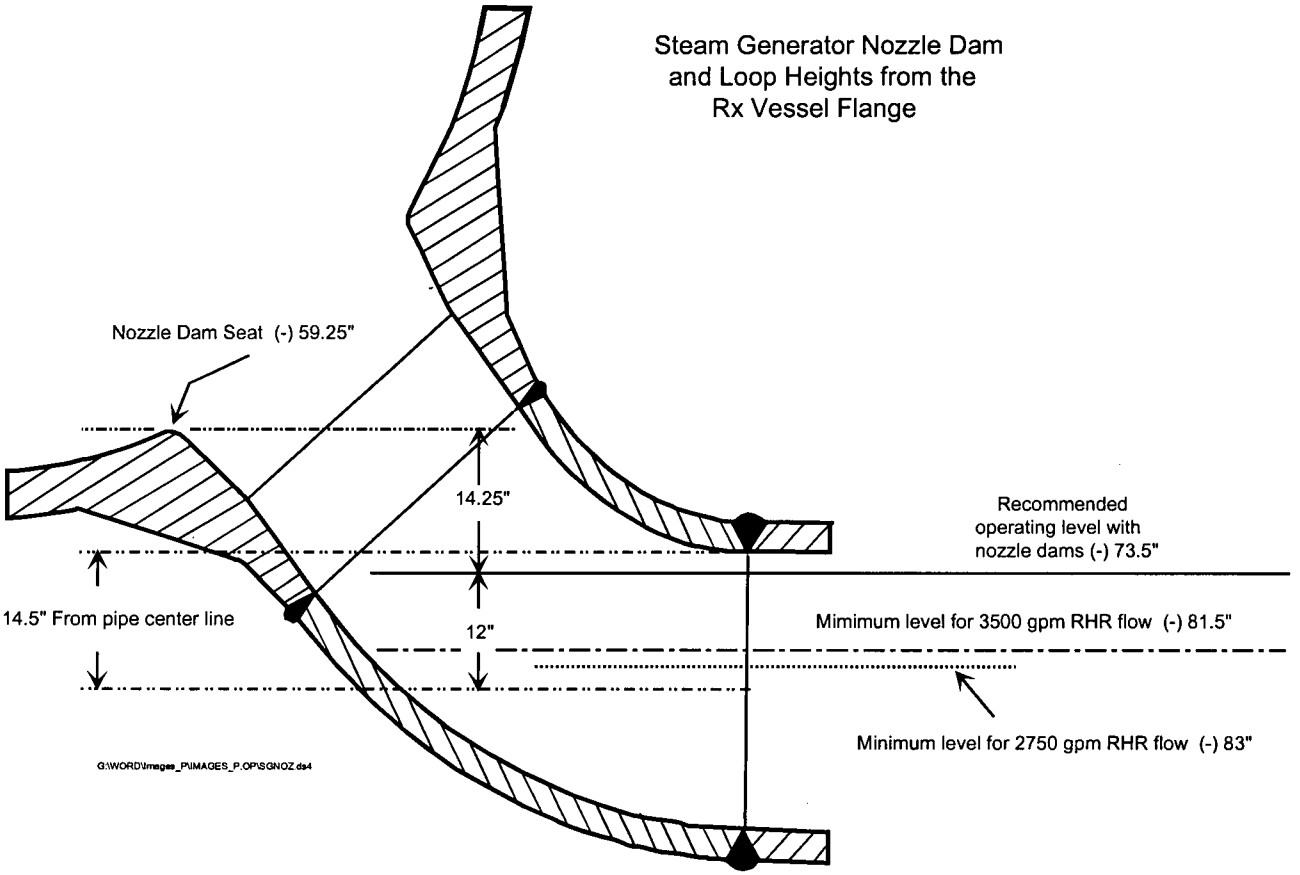

Figure 7: RHR Pump Flow Vs. Level For The Onset Of Cavitation

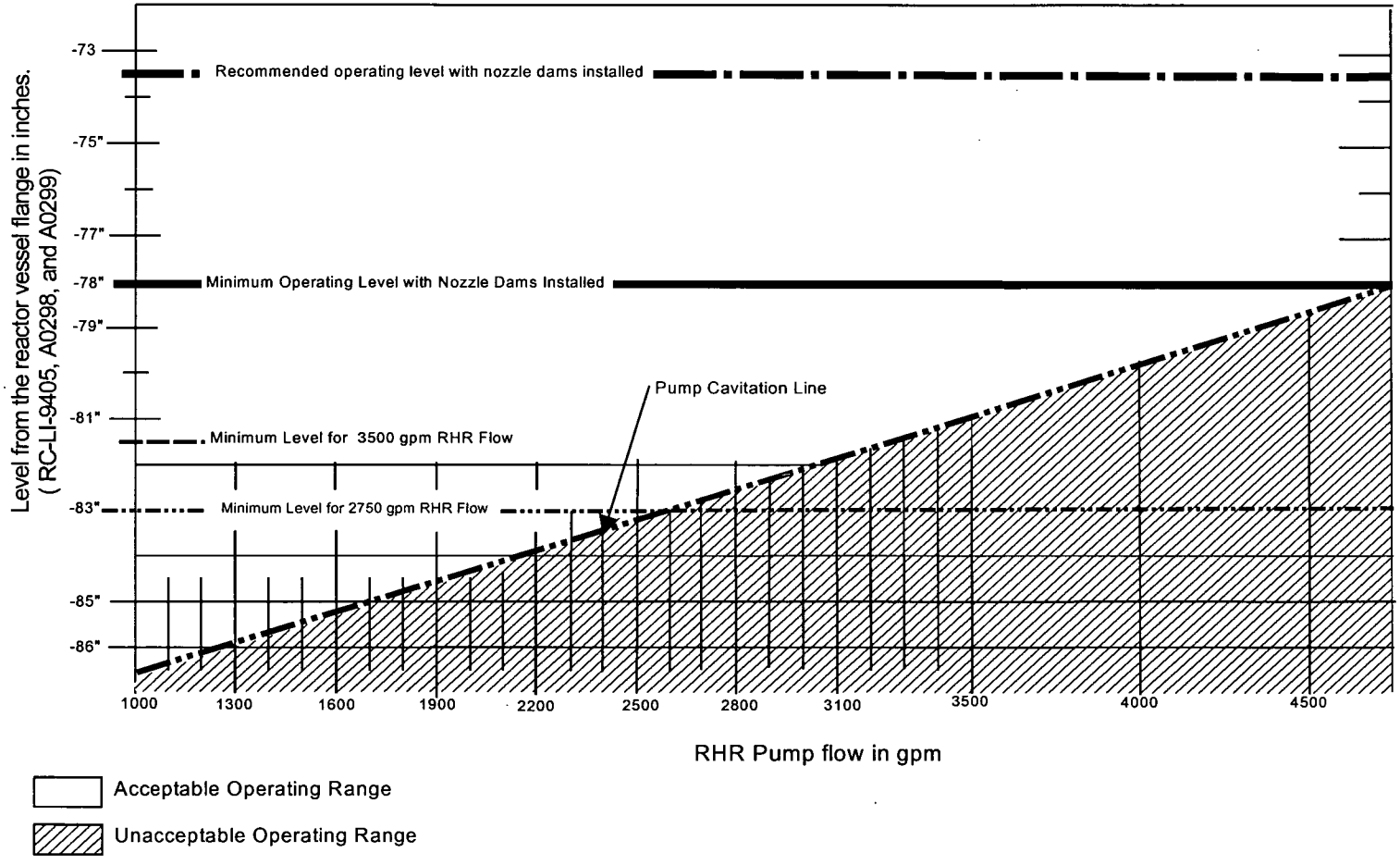

RHRFLOW3 7/12/04

Figure 8: Steam Generator Nozzle Dam

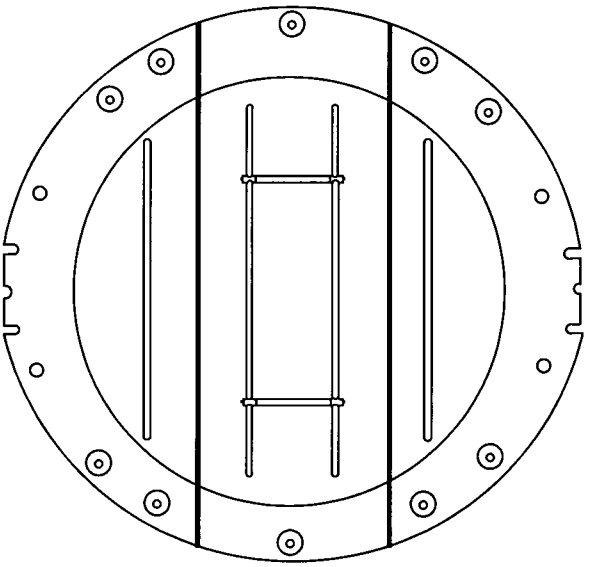

Steam Generator Nozzle Dam
(Seals are not shown)

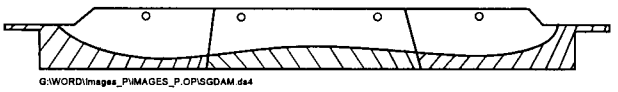

Steam Generator Nozzle Dam

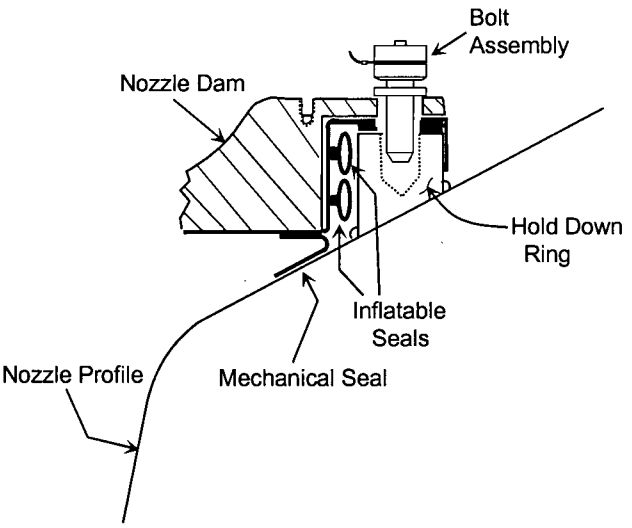

Figure 9: Monitoring RCS Inventory When in Modes 5 or 6

(Sheet 1 of 2)

BACKGROUND:

This good practice resulted from the demineralized water contamination event of September 30, 1991 (SIR 91-33, DM System Contamination from Letdown). It was then identified that RCS inventory control was inadequate when in MODEs 5 and 6 (i.e., an RCS makeup was **not** immediately identified as being abnormal).

GUIDELINES:

1.0 Use of computer graphics and trending capacity is preferred over monitoring chart recorders or indicators. This allows all personnel in the Control Room to monitor trends, versus the board section watchstander alone.

2.0 Anytime makeup is initiated, the reason should be investigated.

3.0 See Technical Specification Bases 3/4.4.1, Reactor Coolant and Coolant Circulation for all conditions needed to declare the RCS "Loops filled."

4.0 Operator Aid 91-09, Refueling Elevations can be used to determine the monitoring range difference between the different level instruments.

5.0 MODE 5 RCS inventory control.

5.1 With charging in service, inventory control is generally bounded by monitoring pressurizer level versus VCT level.

5.2 With charging **not** in service (RHR slipstream, **or no** letdown in service), monitoring pressurizer level alone should suffice.

5.3 An approximate rule of thumb for pressurizer level with the RCS at ambient temperature is 139.5 gallons of makeup for every % change in level (per A0390 **or** RC-LI-462).

6.0 MODE 6 RCS inventory control.

6.1 During refueling operations, evaporation of water in <u>both</u> the containment and fuel storage building can result in makeup operation. The rate of evaporation is highly dependent on a number of parameters, such as:

- Reactor coolant and spent fuel pool temperatures
- Containment and fuel storage building temperatures
- Containment and fuel storage building humidity levels
- Ventilation fans running in either **or** both buildings

Figure 9: Monitoring RCS Inventory When in Modes 5 or 6

(Sheet 2 of 2)

6.2 Changes in any of the above should be noted, as well as any changes in makeup needs. This will enable the operator to detect abnormal makeup once steady state conditions are obtained.

6.3 Changes in containment **or** fuel storage building pressures can result in sluicing between the two buildings and subsequent level changes. An approximate rule of thumb to determine sluicing is a change of 11/16" in the spent fuel pool level for every 1" change in refueling cavity level (.690 gallons).

7.0 Preferred and alternate indications for monitoring primary system inventory are listed below.

PARAMETER	PREFERRED CHANNEL	ALTERNATE CHANNEL
Pressuizer level	A0390 (RC-LI-462)	A0332 (RC-LI-459)[1] A0333 (RC-LI-460)[1] A0334 (RC-LI-461)[1]
Reactor Vessel Level (Non-midloop)	A0382 (RC-LI-9405)	TYGON[2] RC-XX-7315-1 RC-XX-7315-4 RC-LI-1311 RC-LI-1321 SHUTDOWN COOLING COLOR GRAPHIC
Reactor Vessel Level (Mid-loop)	A0298 (ULTRASONIC) A0299 (ULTRASONIC)	A0382 (RC-LI-9405) TYGON[2] SHUTDOWN COOLING COLOR GRAPHIC
VCT Level	A0624 CS-LR-185	CS-LI-185 CS-LI-112[2]
Refueling Cavity Level (Cavity **not** full)	A0382 (RC-LI-9405)	A1186 (SF-LI-2629) A0390 (RC-LI-462)
Refueling Cavity Level (Cavity full)	A0928 (SF-LI-2629-1)	A1186 (SF-LI-2629) A0390 (RC-LI-462)
Spent Fuel Pool Level	A1185 (SF-LI-2607)	SF-LE-2607[3]

1 RC-LI-459, 460 and 461 are **not** cold calibrated. Level changes will appear greater than actual at cold shutdown temperatures.

2 Local indications.

3 Holes on SF-LE-2607 are 3" apart, with the top 1/2" hole (about 1' below floor level) at elevation 25' 10 1/2" (relative to reactor vessel flange). Holes are 3" apart, with 1/2" holes every 1', and 1/4" holes every 3".

Form A: RCS Reduced Inventory/Midloop Operations Shift Checklist

(Sheet 1 of 2)

DATE: _____ TIME: _____ SHIFT _____

RCS TEMP (from core exit TCs) A&B _____ °F _____ °F

DESIRED RX VESSEL LEVEL Minus 73.5 inches (minus 72 inches to minus 79 inches)

RX VESSEL LEVEL (from RC-LI-9405) _____ in. below flange

RX VESSEL LEVEL (from A4237) _____ in. below flange

RX VESSEL LEVEL (from A0298) _____ in. below flange

RX VESSEL LEVEL (from A0299) _____ in. below flange

RX VESSEL LEVEL (RCS sightglass) _____ in. below flange

RHR PUMPS VENTED (enter time) A _____ time B _____ time

TIME SINCE SHUTDOWN _____ hours

TIME TO BOILING (from Figure 3 or 4) _____ min.

HOT LEG NOZZLE DAMS INSTALLED (circle if installed) A B C D

COLD LEG NOZZLE DAMS INSTALLED (circle if installed) A B C D

HOT LEG SG PRIMARY MANWAY REMOVED (circle if removed) A B C D

COLD LEG SG PRIMARY MANWAY REMOVED (circle if removed) A B C D

HOT SIDE VENT PATH AVAILABLE [specify path(s)]

WALK DOWN the RCS sightglass once per shift. Check for proper valve alignment, **no** sags or loop seals, and **no** air bubbles.

Time walked down _____

Identify any work in progress which has the potential of affecting containment integrity.

	WR NUMBER	ACTIVITY	RESPONSIBLE INDIVIDUAL	PENETRATION AFFECTED
1	N/A	N/A		Personnel Hatch
2				E-58 Eddy Current Penetration
3				
4				
5				
6				
7				
8				

Form A: RCS Reduced Inventory/Midloop Operations Shift Checklist

(Sheet 2 of 2)

Identify any work in progress which has the potential of affecting RCS stability.

	WR NUMBER	ACTIVITY	RESPONSIBLE INDIVIDUAL	POTENTIAL AFFECT
1				
2				
3				
4				
5				
6				
7				

Identify any work in progress which opens the RCS cold legs to containment.

	WR NUMBER	ACTIVITY	RESPONSIBLE INDIVIDUAL	EST. TIME TO CLOSE
1				
2				
3				
4				
5				
6				
7				

Form B: RCS Reduced Inventory Water Level Log

(Sheet 1 of 2)

RCS LEVEL **(Note 1)** DATE _____

Time	A0298 Loop 1	A0299 Loop 4	A4237 RC-LI -9467	RCS SIGHT-GLASS	Max Delta Level	Time	A0298 Loop 1	A0299 Loop 4	A4237 RC-LI -9467	RCS SIGHT-GLASS	Max Delta Level
0000						0600					
0015						0615					
0030						0630					
0045						0645					
0100						0700					
0115						0715					
0130						0730					
0145						0745					
0200						0800					
0215						0815					
0230						0830					
0245						0845					
0300						0900					
0315						0915					
0330						0930					
0345						0945					
0400						1000					
0415						1015					
0430						1030					
0445						1045					
0500						1100					
0515						1115					
0530						1130					
0545						1145					

Note 1: When RCS is drained below minus 3 feet, record RCS level every 15 minutes

MIDS	DAYS	SWINGS
_____	_____	_____
CRO	CRO	CRO
_____	_____	_____
US	US	US

Form B: RCS Reduced Inventory Water Level Log

(Sheet 2 of 2)

RCS LEVEL **(Note 1)** DATE _____

Time	A0298 Loop 1	A0299 Loop 4	A4237 RC-LI -9467	RCS SIGHT-GLASS	Max Delta Level	Time	A0298 Loop 1	A0299 Loop 4	A4237 RC-LI -9467	RCS SIGHT-GLASS	Max Delta Level
1200						1800					
1215						1815					
1230						1830					
1245						1845					
1300						1900					
1315						1915					
1330						1930					
1345						1945					
1400						2000					
1415						2015					
1430						2030					
1445						2045					
1500						2100					
1515						2115					
1530						2130					
1545						2145					
1600						2200					
1615						2215					
1630						2230					
1645						2245					
1700						2300					
1715						2315					
1730						2330					
1745						2345					

Note 1: When RCS is drained below minus 3 feet, record RCS level every 15 minutes

Form C: Spool Piece Tracking Form

ACTIVITY	ACTIVITY FOR USE IN	SPOOL PIECE			DATE
1-RE-RCSP-INST-M11A-000	Vessel Head Removal	Installed	☐	Date	_____
1-RE-RCSP-REMV- M11B-000		Removed	☐	Date	_____
1-RE-RFSP-INST-M11A-000	Vessel Head Removal	Installed	☐	Date	_____
1-RE-RFSP-EMV-M11B-000		Removed	☐	Date	_____
1-RE-RVLS- INST-M11A-000	Vessel Head Removal	Installed	☐	Date	_____
1-RE-RVLS-REMV-M11B-000		Removed	☐	Date	_____
1-RC-V-152-M11A-000	OS1001.08, Pressurizer Relief Tank	Installed	☐	Date	_____
1-RC-V-152-M11B-000	Operation, (PRT inert)	Removed	☐	Date	_____
1-VG-SKD-143-M11A-000	OS1001.09, Pre-refueling/Maintenance	Installed	☐	Date	_____
1-VG-SKD-143-M11B-000	Pressurizer Hydrogen Purge	Removed	☐	Date	_____
1-VG-MM-9500-M11A-000	OS1001.09, Pre-refueling/Maintenance	Installed	☐	Date	_____
1-VG-MM-9500-M11B-000	Pressurizer Hydrogen Purge	Removed	☐	Date	_____
1-RC-V-22-M11A-000	OS1000.04, Plant Cooldown From	Installed	☐	Date	_____
1-RC-V-222-M11B-000	Hot Standby to Cold Shutdown	Removed	☐	Date	_____
1-RC-V-225-M11A-000	OS1000.04, Plant Cooldown From Hot	Installed	☐	Date	_____
1-RC-V-225-M11B-000	Standby to Cold Shutdown	Removed	☐	Date	_____
1-RC-V-228-M11A-000	OS1000.04, Plant Cooldown From Hot	Installed	☐	Date	_____
1-RC-V-228-M11B-000	Standby to Cold Shutdown	Removed	☐	Date	_____
1-RC-V-231-M11A-000	OS1000.04, Plant Cooldown From Hot	Installed	☐	Date	_____
1-RC-V-231-M11B-000	Standby to Cold Shutdown	Removed	☐	Date	_____
1-RC-V-17-M11A-000	OS1001.02, Draining the Reactor Coolant	Installed	☐	Date	_____
1-RC-V-17-M11B-000	System for Reactor Vessel Head Removal	Removed	☐	Date	_____
1-SI-V-2-M11A-000	OS1090.08, System and Component Flush	Installed	☐	Date	_____
1-SI-V-2-M11B-000		Removed	☐	Date	_____
1-SI-V-46-M11A-000	OS1090.08, System and Component Flush	Installed	☐	Date	_____
1-SI-V-46-M11B-000		Removed	☐	Date	_____

Form D: RC-LIT-9405/9467 Venting

CAUTION

Venting of LT-9405 and LIT-9467 should only be performed on the high side of both instruments. If low side venting is necessary, care should be taken **not** to operate manifold valve V6 in order to prevent filling the dry reference leg with water.

NOTE

When RC-LT-9405 and RC-LIT-9467 are placed in service, I&C must vent the high side of the instruments. In addition, venting using the following high point vents is required to verify entrapped air in process leg high side is fully vented. Thorough venting is necessary to ensure accurate RCS level indication. A small step ladder will be needed to reach RC-LT-9405-V-2A-H and RC-LT-9405-V-2B-H. A 1/4 inch Swagelock union is also necessary. Pictures showing RC-LT-9405, vent RC-LT-9405-V-2A-H and RC-LT-9405-V-2B-H are located in directory P:\PLANTPIC\RC\OS1001.11\Section 4.2.

VENT at the following locations: (suggested order)

☐ • RC-LT-9405-V-2A-H, RC-LT-9405 high side high point vent, (located about 10′ above floor, -26′ containment under speaker behind loop 1 crossover leg, a step ladder is needed)

☐ • RC-LT-9405-V-2B-H, RC-LT-9405 high side high point vent (located 10 feet above the floor, -26′ containment, between bioshield and the ladder down to the containment sump B, a step ladder is needed)

☐ • RC-LT-9405 high side (inside missile barrier behind SI accumulator C)

☐ • RC-LIT-9467 high side (inside missile barrier behind SI accumulator C)

Attachment 1: Operation With RCS At Reduced Inventory/Midloop Conditions Background Document

(Sheet 1 of 9)

Specific RCS midloop testing has been performed at Seabrook Station to determine acceptable RHR system operating limits while at midloop conditions. This testing, performed by STP-105, RHR/Reactor Coolant Midloop Operation, was completed in April 1988. The test results provided RHR system operational information that has been incorporated into OS1000.12, Operation With RCS At Reduced Inventory/Midloop Conditions. Since the performance of STP-105, additional loop level detectors have been installed. These indicators are mounted on loop 1 and 4 hot legs, between the RHR suction connection and the vessel, so RCS level can be monitored in the Control Room by remote indication. These and existing level indicators provide level indication which is redundant and diverse. These additional indications sense level through ultrasonic signal generation. The ultrasonic level detectors, RC-LT-9405 and RC-LIT-9467 level indications are available to the Control Room operators for monitoring RCS level during all phases of RCS drain down. The ultrasonic level transmitters will give erratic indication until the actual level is below the top of the loops. Below minus 92 inches, the ultrasonic level transmitters will **not** provide accurate hot leg level indication. The level transmitter has an operating range between minus 71 and minus 92 and analog points will appear magenta below 92 inches. RCS sightglass is also connected from a loop 3 crossover leg flow transmitter connection to a pressurizer vent connection. This sightglass provides a backup indication to those previously mentioned and will be monitored during any level change and routinely during reduced inventory condition.

During the initial drain down process, the ultrasonic level transmitters are operational, but do **not** provide accurate level indication above the loop penetrations. The only level indicators that actually indicate level are RC-LT-9405, RC-LIT-9467 and the RCS level sightglass. Once RCS level is within the loop penetration elevation, the ultrasonic level indicators will begin to provide accurate RCS level indication. If during the drain down process, level indicators do **not** agree within specified limits, the drain down will be terminated and a determination made to identify and correct level inconsistencies.

The RCS level will initially be between minus 28 and minus 32 inches below the reactor vessel flange. At this RCS level, RHR pump flow rate restrictions are **not** imposed. RCS vessel level will be lowered by using RHR letdown to the CS system and then to the Primary Drain Tank. This draining method allows for a controlled drain rate and transfer of RCS coolant to the Primary Drain Tank.

Attachment 1: Operation With RCS At Reduced Inventory/Midloop Conditions Background Document

(Sheet 2 of 9)

1. PROCEDURE PERFORMANCE

Primary side Steam Generator and Reactor Coolant Pump maintenance activities may require that reactor coolant level be lowered to the mid plane of the reactor coolant piping. Lowering reactor vessel level to the midloop level is required to gain access to the SG hot and cold leg primary channel heads, and may be necessary during RCP seal replacement. Performance of this evolution is provided by procedure OS1000.12, Operation With RCS At Reduced Inventory/Midloop Conditions.

Routine SG U tube inspection is described in the Updated Final Safety Analysis Report (UFSAR) Chapter 5, Section 5.4.3.2 Design Description, All piping connections from auxiliary systems are made above the horizontal centerline of the reactor coolant piping, with the exception of the following:

a. Residual heat removal pump suction lines, which are 45 degrees down from the horizontal centerline. This enables the water level in the RCS to be lowered in the reactor coolant pipe while continuing to operate the Residual Heat Removal System, should this be required for maintenance.

2. METHODOLOGY

Prior to lowering level to reduced inventory conditions, Technical Specification 3.4.1.4.2 Reactor Coolant Loops and Coolant Circulation Cold Shutdown - Loops **Not** Filled, requires that two Trains of RHR be operable.

Technical Specification 3.9.8.2 Refueling Operations, Residual Heat Removal and Coolant Circulation Low Water Level, surveillance requirement requires that RCS circulation be maintained greater than 2,750 gpm when refueling cavity level is less than 23 feet. This administrative requirement, therefore, limits the resultant RCS level within the loop penetrations. The minimum level that would be allowed for 3,000 gpm, would be three inches above loop midplane. In order to allow for additional operating margin, RCS level should be maintained at eight to ten inches above loop midplane elevation. At this level variations in **either** RHR flow **or** RCS level are well bounded. An increase in RHR flow would be bounded by a margin of 1,000 to 1,500 gpm before the onset of air entrainment.

3. EXPECTED PLANT RESPONSES

Draining of the Reactor Coolant System to midplane elevation or midloop, is specifically covered by procedure OS1000.12, Operation With RCS At Reduced Inventory/Midloop Conditions.

a. Drain Down

The RCS drain down process will use RHR letdown. The drain process will transfer approximately 30,000 gallons of coolant to the Primary Drain Tank or the RWST. The drain process with nozzle dams in two steam generators will transfer approximately 3,750 gallons of coolant to the Primary Drain Tank or the RWST. The drain rate will be based upon level indication between RC-LT-9467 and the RCS sightglass. Initially, while performing the drain down from the reactor vessel flange to the top of loop piping, the SG tubes are filled with reactor coolant. As the level is lowered to the top of the loop penetrations, the SG tubes will begin to empty. During this period of the drain down, the level instrumentation indication will vary as the SG tubes empty. RCS inventory will be removed without the level indicators showing a downward trend. Once the SG tubes have emptied, the level indicators will begin to show a downward trend.

b. Drain Down Rate

Based on previous midloop testing (STP-105), a drain rate of 50 gpm to 75 gpm can be supported while maintaining level indication within a five inch level agreement. If during the initial vessel drain down the level indicators do **not** agree within the five inch level span, the drain down **shall** be terminated until the level indications are within the specified level span. Changes in drain down rate will cause differences between RC-LT-9467 and the RCS sightglass level indications due to their RCS connection points, loop 1 and loop 3, respectively. If any 2 narrow range level indicators disagree by more than 15 inches, stop RCS draining until the level indicators agree within 14 inches.

c. System Operation While at Midloop

RHR pump operation **shall** be governed by OS1000.12, Operation With RCS At Reduced Inventory/Midloop Conditions.

4. ABNORMAL CONDITIONS

The major categories of events that could effect RHR cooling during midloop operation are RHR flow, RCS level, or loss of electrical power. Each of these abnormal conditions are discussed below.

a. RHR Flow/Cooling

RHR flow can be effected by air entrainment, loss of instrument air, and operator misadjustment of RHR flow control valves. RHR suction air entrainment is a function of RHR flow and RCS loop level. RHR flow rate guidance, provided in OS1000.12, results in safe operation. This RHR flow rate information is supported by Seabrook specific testing provided by STP-105, RHR/Reactor Coolant Midloop Operation Test. When RHR operation is bounded by this flow vs. level curve, RHR air entrainment will **not** occur.

b. RCS Level

There are four level indicators providing redundant and diverse RCS level indication. Two of these level indications indicate and alarm in the Control Room.

1) RC-LT-9405 provides RCS level indication from a loop 1 crossover leg reference leg connection and a reference leg connection to containment. During plant conditions where the reactor vessel head is **not** being removed, the RCS head vent piping is connected via spool connections to the pressurizer steam space vent gas connection. Vent gas spool connections at the reactor vessel head vent piping, pressurizer steam space connection, and RC-LT-9405 reference leg, provide the necessary interconnections for accurate RCS level indications. When the RCS head vent piping is removed (as would be for refueling conditions) the pressurizer, RC-LT-9405, and RCS head connection vent paths are verified open to the containment atmosphere.

2) RC-LIT-9467 is connected to RC-LI-9405 process and reference legs. It provides local indication and feeds A4237. This is a narrow range level instrument with a level range of +32 inches to -95 inches.

3) Loop 1 and 4 hot legs are provided with ultrasonic level transmitters. These transmitters are physically mounted to the bottom of the pipe and sense RCS level through the transmission of ultrasonic signals through the pipe and RCS loop fluid. These two transmitters are specifically designed and installed for the purposes of monitoring RCS level while in a reduced inventory condition. When level is below the top of the RCS pipe, Loop 1 and 4 ultrasonic level transmitters provide level indication via analog points A0298 and A0299, respectively. VAS alarms alert the operators to RCS level approaching midloop, level below midloop, and RCS high temperature.

4) The RCS sightglass is a tygon hose connected to a loop 3 crossover leg flow transmitter sensing line low point drain connection and to the pressurizer spray supply line vent connection. These connection points provide a closed loop level indicating system so that effects of drain down are sensed by the indicator. Permanent reference level elevation marks are provided on the containment building south stairwell. The RCS sightglass is routed along these elevation marks so that RCS level can be monitored in a low radiation area. These elevation marks are referenced to the vessel bolt hole flange and are annotated with the significant RCS levels, e.g., vessel flange, top of loop, midloop, and bottom of loop indications.

c. Loss of Electrical Power

The loss of electrical power will create a situation where the only core cooling method is through gravity feed from the RWST. This method should be started before reaching saturation conditions in the core. This can be identified from the curves for time to boil. Loss of non-vital power will result in the RHR flow control valves going to their full open position. However, maintaining RCS level above minus 78 inches will prevent pump vortexing due to high flow.

5. UNEXPECTED RESPONSES

a. Air Entrainment

While at midloop, air entrainment can be observed by monitoring RC-LT-9467 (A4237). Air entrainment can be identified by an actual increase in RCS level trend and restabilization without any change in RCS inventory.

RHR air entrainment is a function of RHR flow rate and RCS level. Air entrainment can occur for low RCS level, with high RHR flow and for high RCS level and higher RHR flow. The mechanism for this phenomenon is the swirling effect caused by the RHR suction tap off the RCS loop piping. This swirling flow will cause air to be entrained and carried into the RHR piping and pump. This air then displaces fluid that would normally be in the RHR system but is now in the RCS system. This fluid displacement to the RCS from the RHR system causes the upward trend in indicated level. The main plant computer trending can display this effect more directly since the level indicator is graphically displayed for a given time period and level span.

b. RHR Pump Operation With Entrained Air

Characteristics of air entrainment other than upward level trending are: increased RHR pump flow noise, lowering RHR suction pressure, and increased piping movement. RHR pump amps will **not** change significantly until actual loss of RHR flow caused by air gulping or by complete voiding of the pump.

c. Restoration of Normal RHR Flow (Recovery from Air Entrainment)

Recovery from air entrainment can be performed by either of two methods, each effecting the air entrainment process. RHR pump flow can be lowered or RCS level can be increased.

d. **RCS Level and Flow Adjustments**

RCS level is the dominating factor with RHR flow air entrainment and has the most effect in restoration of flow. Lowering RHR flow is **not** as effective since lowering RHR flow below 1000 gpm can result in opening the RHR miniflow valve and thus delaying the removal of the entrained air from the RHR system. The most effective method in restoring normal RHR flow is to increase RCS level while maintaining RHR flow at or slightly below 3,500 gpm. Competing factors will influence RCS level indication. First, RCS level increased with air entrainment, therefore, level will tend to decrease when air entrainment is eliminated. Second, the level change may be masked by the addition of makeup water. On the other hand, decreasing RHR flow following air entrainment without adding makeup water would cause a detectable level drop. Other factors are introduced into determining which action to implement. Reducing RHR flow rate can be performed much more quickly than increasing RCS level, and if the SG manways are removed, increasing level may **not** be an option. In these cases, reducing RHR flow rate will be the most effective method in reducing air entrainment.

Westinghouse letter, NAH-92-3954, addresses plant conditions which effect the operation of the ultrasonic level instrumentation. This information is based on operating experience from approximately 30 power plant installations. The following is a condensed version of the problems described in the Westinghouse letter.

The following plant conditions will cause a loss of hot leg level indication or will cause the level indication to cycle in discrete steps between actual level and bottom of hot leg level indication.

1) Steam Generator Burping: The steam generators remain partially filled due to the vacuum created in the steam generators when lowering the RCS level. When the RCS level is lowered to a level just below the top of the hot leg pipe, the steam generators begin to drain in a burping fashion until the steam generators are empty.

2) After installing nozzle dams: The RCS level is increased above the hot leg pipe without reflooding the steam generators. When the RCS level is increased above the top of the hot leg, small air pocket/bubbles remain trapped at the top of the pipe. Once the RCS level is lowered approximately 1/2 inch below the top of pipe where the bubbles are **no** longer trapped in the top of pipe, the ultrasonic level indicators will lockon and the associated MPCS analog points will indicate actual RCS level in the hot leg.

3) RHR Flow Rate: Plants that operate with RHR flow rates in excess of 3,000 gpm may experience a loss of lockon and main plant computer indication.

4) Evacuation Fill: During refilling of the RCS, some plants perform an evacuation. During the evacuation process, masses of water and air pass through the hot legs.

5) Signal Noise: The ultrasonic level indication can be degraded due to external noise created by lighting fixtures, welding machines, or extension cords running within two feet of the equipment and signal cable. Such practices should be avoided.

e. Loss of RHR Cooling Requiring RWST Gravity Feed or SI Pumped Injection

If during the drain down evolution or while operating at midloop core cooling is lost and the pressurizer contains a hot leg vent path (such as the safeties removed), attention should be paid to the restoration of RCS inventory to preclude the potential for pressurizer surge line flooding. An engineering evaluation has been performed (SBP 92-0345) that identifies that should core cooling be lost, inventory loss will occur through the pressurizer vents. Without continued makeup, core uncovery will occur and core damage may result.

If RCS makeup is possible, the timing of the makeup process is very important in order to prevent possible pressurizer surge line flooding. Surge line flooding would provide additional resistance to gravity feed from the RWST to the RCS. Depending on the resistance within the surge line, gravity feed from the RWST to the RCS may **not** occur. In this case, RH or SI pump operation would be required to ensure adequate core cooling. If there is a complete loss of power, then the potential for RCS makeup would **not** be available and core damage may result. Surge line flooding also may result in the removal of coolant from the vessel and surge line due to the venting steam flow through the surge line. This entrained liquid would be held up in the pressurizer and **not** available to cool the core. Therefore, it is particularly important to restore core cooling early in the event to prevent boiling and the potential for surge line flooding.

Attachment 2: Operation With RCS At Reduced Inventory/Midloop Conditions Pre-Test Briefing Document

(Sheet 1 of 5)

Prior to conducting the brief the Senior Line Manager should review PR 3.2 section 4.5 Senior Line Management Briefings. The Test Coordinator should review PR 3.2 section 4.6 Test Coordinator Briefings.

The risk assessment personnel will probably provide some industry events for the brief. If **not**, they can be found on the LAN in a bulletin board.

Recommended Attendees

- Senior Line Manager (1)
- Shift Supervisor (1)
- Unit Supervisor (1)
- Two Control Room Operators (1)
- Test Coordinator (1)
- Nuclear System Operators
- Quality Assurance Personnel
- Containment Coordinator
- Nozzle Dam Installation Team
- Health Physics

(1) Attendance Mandatory

System Operation While At Midloop

Discussion items should include the below listed phenomena that can occur during midloop:

Cavitation is the formation of vapor bubbles in any flow that is subjected to an ambient pressure equal to or less than the vapor pressure of the liquid pressure being pumped (i.e., flashing at or across the pump impeller.) Cavitation will reduce both the total head (NPSH) and pump output capacity.

Air entrainment different from cavitation, may enter the impeller inlet from several sources (i.e., gasses that may be released from solution or enter through leaks in the suction piping) also referred to as "Air Ingestion". Its immediate effect usually will be a drop in capacity at power, followed by loss of prime, if more gas is present than the impeller can handle, or worst case, create an air bound impeller casing also referred to in industry terms as "Air Binding".

Vortexing is strongly influenced by high velocity suction flow conditions either at the pump inlet or at the suction source (inlet nozzle) having a non-uniformed suction approach (i.e., sharp entrance, pump inlet geometry, poorly designed pump intake configuration, etc.). Vortexing and/or swirl at the pump suction could induce air bubbles to be drawn into the pump inlet, which could cause large inlet losses, lower pump efficiency, and cause unsteady loading on a pump impeller. Vortexes, combined with swirling flow, have high rotational velocity and can create a large enough bubble that can sufficiently reduce local pressure at the pump inlet. This condition has the potential to induce air entrainment and/or effect available NPSH.

Air Entrainment

While at midloop, air entrainment can be observed by monitoring RC-LIT-9467 (A4237). Air entrainment can be identified by an actual increase in RCS level trend and restabilization without any change in RCS inventory.

RHR air entrainment is a function of RHR flow rate and RCS level. Air entrainment can occur for low RCS level, with high RHR flow and for high RCS level and higher RHR flow. The mechanism for this phenomenon is the swirling effect caused by the RHR suction tap off the RCS loop piping. This swirling flow will cause air to be entrained and carried into the RHR piping and pump. This air then displaces fluid that would normally be in the RHR system but is now in the RCS system. This fluid displacement to the RCS system from the RHR system causes the upward trend in indicated level. The main plant computer trending can display this effect more directly since the level indicator is graphically displayed for a given time period and level span.

RHR Pump Operation With Entrained Air

Characteristics of air entrainment other than upward level trending are; increased RHR pump flow noise, lowering RHR suction pressure, and increased piping movement. RHR pump amps will **not** change until actual loss of RHR flow caused by air gulping or by complete voiding of the pump.

Attachment 2: Operation With RCS At Reduced Inventory/Midloop Conditions Pre-Test Briefing Document

(Sheet 3 of 5)

Restoration of Normal RHR Flow (Recovery from Air Entrainment)

Recovery from air entrainment can be performed by either of two methods, each effecting the air entrainment process. RHR pump flow can be lowered or RCS level can be increased. RCS level is the dominating factor with RHR flow air entrainment and has the most effect in restoration of flow. Lowering RHR flow is **not** as effective since lowering RHR flow below 1000 gpm can result in opening the RHR miniflow valve and thus delaying the removal of the entrained air from the RHR system to the RCS system. The most effective method in restoring normal RHR flow is by increasing RCS level while maintaining RHR flow.

Other factors are introduced into determining which action to perform. Reducing RHR flow rate can be performed much more quickly than increasing RCS level, and if the SG manways are removed, increasing level may **not** be an option. In these cases, reducing RHR flow rate will be the most effective method in reducing air entrainment.

SPECIAL PRECAUTIONS/LIMITATIONS

Until the nozzle dams are removed, RCS level should be maintained greater than minus 79.0 inches. Leakage from the inflatable seal could cause an air pocket under the cold leg dam. RCS level could drop by as much as 2.5 inches when the cold leg dam is removed.

This procedure requires that additional focus is placed on all activities that could effect RCS vessel level and core cooling. During the performance of this procedure, all work activities that could affect RHR operation, RCS boundary, or impact available electrical power supplies will be evaluated by the test personnel and operations staff to ensure that **no** impact will occur during drain down and midloop operation.

DATA RECORDING

Specific midloop data taking is required as soon as RCS level is lowered below minus 36 inches. **No** other procedural data recording is required. Addition system responses may be logger trended at the direction of the US or the Test Coordinator.

THE FLOW OF THE PROCEDURE IS AS FOLLOWS:

Section 5 INITIAL CONDITIONS

Vessel level will be minus 28 inches to minus 32 inches, (level required to set the vessel head).

Both trains of RHR will be operable.

Charging will be in service supplying the loops and all coupled reactor coolant pumps.

RHR letdown will be in service.

The letdown degassifier is desired but **not** required.

Attachment 2: Operation With RCS At Reduced Inventory/Midloop Conditions Pre-Test Briefing Document

(Sheet 4 of 5)

Section 6.1 Drain The RCS From Just Below Vessel Flange To The Hot Leg Midplane Using RHR Letdown

The low range RHR suction pressure transmitters are placed in service.

One SI pump is made available for injection if needed. The preferred pump is opposite from the charging pump.

All 4 accumulators are filled and pressurized to between 80 to 90 psig.

RCS level is maintained above minus 78 inches. This will prevent pump vortexing due to high flow in the event that air is lost to the RHR temp control valves.

One train of RHR is placed in standby. This prevents both trains of RHR becoming air bound at the same time. It is preferred to keep the same train charging and RHR pumps in service.

RHR flow is maintained at 2,900 gpm until level has been raised above reduced inventory. This will aid the ultrasonic level detectors maintain their lock.

STATION an Operator, in communication with the Control Room, at the RCS sightglass to locally monitor level. MAINTAIN the Operator at the sightglass until level is stable and displayed in the Control Room.

STATION an Operator in the running train RHR vault to listen for cavitation. MAINTAIN an Operator in the vault until RCS level is greater than minus 36 inches.

The drain rate is monitored to prevent the level indicators from exceeding the agreement criteria. Water will be sent to the RWST OR cold transferred to the BWST from the PDT.

Level will be maintained at minus 73.5 inches, (minus 72.0 inches to minus 78.0 inches), while the nozzle dams are removed.

The sightglass watch may be released if the sightglass level is displayed in the Control Room.

MAINTAIN an Operator in the running train RHR vault.

Attachment 2: Operation With RCS At Reduced Inventory/Midloop Conditions Pre-Test Briefing Document

(Sheet 5 of 5)

6.2 Restore RCS Level to Between Minus 6 And Minus 30 Inches.

The charging pump suction is aligned to the RWST and level is raised to just below the vessel flange.

The operator in the vaults may be released once level is greater than –36 inches.

Attachment 3: Operation With RCS At Reduced Inventory/Midloop Conditions Personnel List

Procedure: OS1000.12 Rev.: 04 Sheet _____ of _____

I understand my responsibilities and duties regarding the performance of this procedure.

NAME (PRINT)	INITIALS	POSITION

Attachment 4: Operation With RCS At Reduced Inventory/Midloop Conditions Chronological Log

Procedure: OS1000.12 Rev.: 04 Sheet _____ of _____

DATE	TIME	

Attachment 5: Briefing Handout

Charging will be in service with seal injection to all coupled RCP's. RHR letdown will be in service. At least one SI pump and all accumulators will be available. Both DG's will be available. Adjust the operating RHR flow to 2,900 gpm. Station the RHR Vault watch and the sight glass watch. Drain to –73.5" (-72.0" to –78.0"). Install nozzle dams. Fill to vessel flange, between minus 6 inches and minus 30 inches. The RHR watch is released when greater than minus 36 inches.

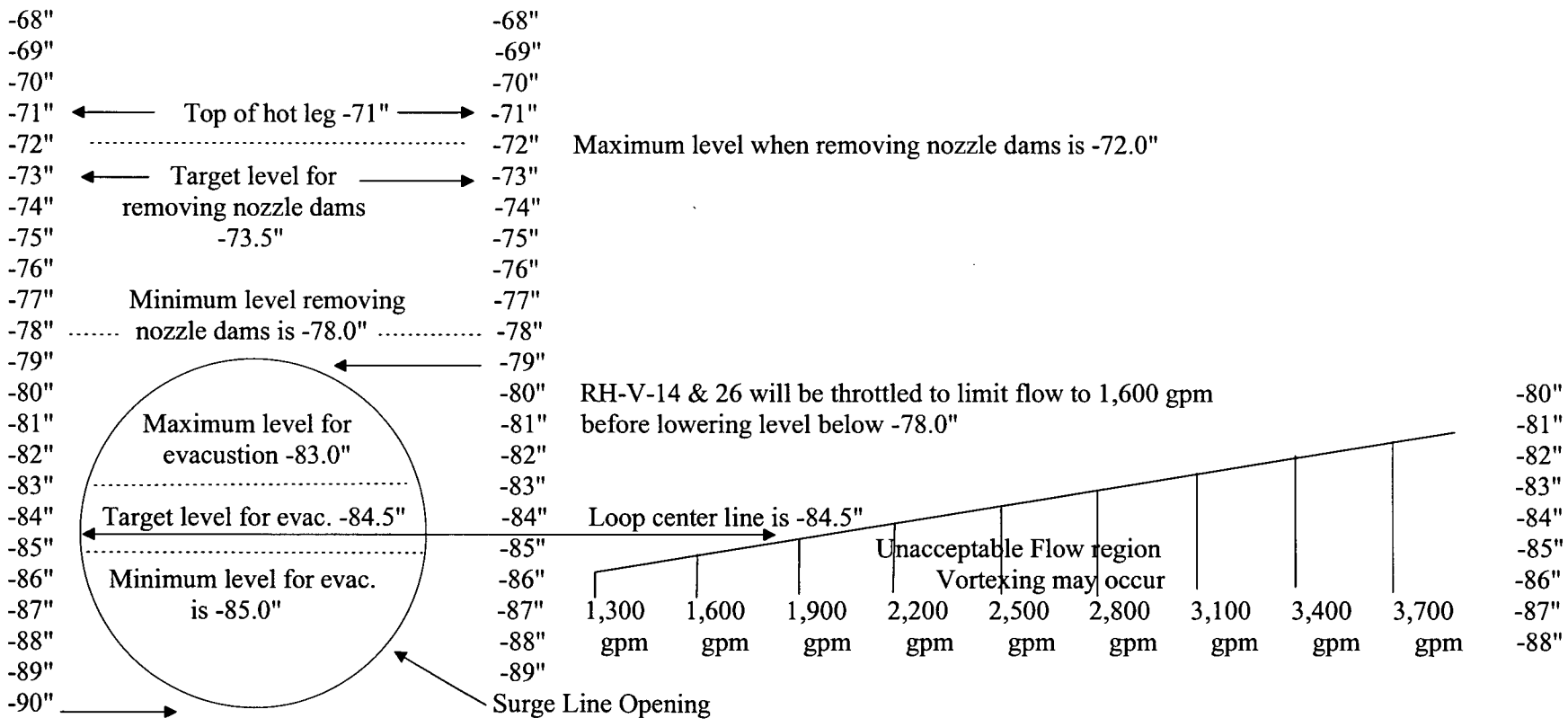

OS100012and14

PROCEDURE BASIS INFORMATION

Rev. 04: This procedure was revised in accordance with MNPR, PR 3.2. (August 2003)

- Incorporated lessons learned from OS1000.14.

Rev. 03: **No** changes made; converted to format specified in MNPR, PR 3.2. This procedure was converted on (date of conversion).

Rev. 03 Chg. 01 (December 1998)

- Added step 4.10 and a Note prior to step 6.1.20.3 to inform operators that whenever CS-LCV-112A is open, the MPCS will disregard RCS leak rate data.
- Change written in response to MMOD 98–0638 implementation.

Rev. 03 Chg. 02 (December 1998)

- Deleted Change 01. MMOD 98–0638 and its associated software changes could **not** be implemented as planned.

Rev. 03 Chg. 03 (February 1999)

- Added items on the Spool piece Tracking Form to allow tracking of items **not** covered in procedure steps. Deleted items which **no** longer need to be tracked because they are **no** longer used.

Rev. 03 Chg. 04 (April 1999)

- Corrected Attachment 1, Operation With RCS At Reduced Inventory/Midloop Conditions Background Document, to match the Engineering Department's version.
- Incorporated in Chg. 05.

Rev. 03 Chg. 05 (April 1999)

- Incorporates Chg. 04.
- Changed the estimated drain down value in the discussion section to 30,000 gallons based on operating experience.

Rev. 03 Chg. 06 (May 1999)

- Added definitions of cavitation, air entrainment, and vortexing to pretest briefing document in response to NRC Generic Letter 87-12.
- SPCR 98-014.

Rev. 03 Chg. 07 (September 1999)

- Deleted reference to the SCRO due to organizational change.

Rev. 03 Chg. 08 (April 2000)

- Added electronic limited use notice, procedure on management hold.

Rev. 03 Chg. 09 (November 2000)

- Corrected typo on Figure 7, "Let" to "Leg."

Rev. 03 Chg. 10 (April 2002)

- Deleted activities 1-RE-MSSP-INST-M11A and 1-RE-MSSP-REMV-M11B in Form C due to simplified reactor head package.

Rev. 03 Chg. 11 (June 2002)

- Added step 6.1.1 to walkdown the RCS sight glass prior to draining. (CR 02-08148)

Rev. 03 Chg. 12 (October 2002)

- Added new Figure 11, Monitoring RCS Inventory When in MODES 5 or 6.

Rev. 03 Chg. 13 (May 2003)

- Changed Figure 6 to reflect the cancellation of EX1804.36. The contents of EX1804.36 have been transferred to OX1413.07.
- Added OX1413.07 and OX1413.08 (RH Pump Comprehensive Tests) to Figure 6, Operating Procedures That May Affect the RCS.

SEABROOK STATION

Operations Procedure

Containment Penetrations

OS1056.03

Rev. 01 Chg. 11

Level of Use
Information

Procedure Owner:
AOM Support
System: ECCS

TABLE OF CONTENTS

1. PURPOSE 3

2. PREREQUISITES 3

3. PRECAUTIONS 4

4. INSTRUCTIONS 7

5. REFERENCES 8

6. SUMMARY OF CHANGES 8

FIGURES AND FORMS

Figure 1: Deleted 10

Figure 2: Deleted 11

Figure 3: Penetration Index 12

Figure 4: Containment Penetration Locations 14

Figure 5: Containment Penetration Integrity Criteria 55

Figure 6: Valves Associated With Penetrations 69

Form A: Tracking Work Affecting Containment Integrity 73

1. PURPOSE

1.1 Objective

Use this procedure as a common reference for tracking containment penetrations.

1.2 Discussion

This procedure provides:

- a numerical listing of containment penetrations
- illustrations of each penetration
- a brief description of penetration criteria to determine if a penetration is isolated
- an alphabetical listing of valves associated with penetrations.

This procedure will be used to track work being performed on containment penetrations and as a common tracking tool for the following procedures:

- OS1401.12, RCS Reduce Inventory Containment Integrity Verification. This is the controlling document which contains the administrative requirements for work done in this plant condition.
- OX1415.03, Refueling Containment Integrity Weekly Verification. This is the controlling document which contains the administrative requirements for work done in this plant condition.
- NAWM Chapter 7, Outage Risk Management Program.

  The Work Control Supervisor is the person expected to be in charge of maintaining the active copy of this procedure and its associated worksheets.

2. PREREQUISITES

2.1 Definitions

2.1.1 System in Service - Any penetration marked as "System in Service" shall be evaluated as to its adequacy in providing containment atmospheric integrity. If **no** direct path exits between the containment and outside atmosphere, integrity shall be satisfied and the acceptance criteria met.

2.1.2 Work Affecting Containment Closure – any activity which establishes the ability for containment atmosphere to communicate directly with the environment outside containment.

2.1.3 RCS Intact – The RCS is considered intact whenever the reactor vessel head is in place with the vessel head closure bolts not fully detensioned and no openings larger than the Tech Spec vent exist between the RCS and containment atmosphere.

2.1.4 When fuel is in the vessel and the RCS is not intact, maintain the ability to isolate containment within the time to boil.

3. PRECAUTIONS

3.1 Fire Protection must be notified prior to opening any penetration to determine if it is a Technical Requirements fire barrier.

3.2 Temporary closures may be utilized to accomplish the containment closure function. In each case the temporary closure must be controlled by a work request, a procedure **or** a temporary modification to ensure that the temporary measures are controlled and that the containment penetration is restored to its operable condition prior to entering MODE 4, as required by technical specification 3.6.1.1.

Temporary closures may include blind covers fabricated from 10 gauge (**or** thicker) metal material, standard pipe fittings, such as pipe caps and plugs, fabricated assemblies that attach to containment penetrations and include an isolation valve **or** a welded closure. Temporary blind covers **shall** be installed such that there are **no** gaps in the sealing surface; pressure testing is **not** required. Gasket material should be compatible with the application to ensure that there are **no** gaps in the sealing surface. Silicone sealant may be used in lieu of **or** in addition to gasket material based on material compatibility.

Unacceptable closure materials include wood covers, plastic covers, visquine, tape, etc. Ref: CR 02-07833.

3.3 All containment penetrations (mechanical and electrical) must be considered when evaluating containment closure capability. UFSAR Table 6.2-92 provides a list of all containment liner penetrations while the Figures of this procedure list only mechanical penetrations.

3.4 When the Containment Outage Door is installed and being used for Containment closure during the movement of non-recently irradiated fuel assemblies, the following T.S. 3.9.4 bases requirements apply:

- The reactor vessel upperinternals have been removed, and
- The water level above the top of the reactor vessel flange is greater than or equal to 23 feet.
- The containment outage door is installed and capable of being closed within **1** hour.
- Hoses and cables being run through the Containment Outage Door will employ a means to allow safe, quick disconnection or severance
- A designated individual is available and in direct communication with the control room with the responsibility for the expeditious closure (within 1 **hour**) of the Containment Outage Door in the event of a fuel handling accident.

3.5 There are multiple restrictions for maintaining the capability to establish containment closure and how containment closure is defined. These restrictions are used to meet requirements of Technical Specifications, NRC commitments to Generic Letter 88-17 and PRA risk assessment for given plant conditions. IF the requirement is in question a conservative approach should be taken with the capability to establish containment closure until all questions are resolved. The most conservative approach is a combination of the listed restrictions, utilizing the most restrictive direction for the establishment of containment closure.

3.5.1 When the RCS is intact and RCS level is greater than RCS at reduced inventory, containment closure is restricted by Technical Specifications for the Applicable Mode or specified condition and are the limiting minimum requirements for containment closure.

3.5.2 When the RCS is at reduced inventory the restrictions of OS1401.12, RCS Reduced Inventory Containment Integrity Verification is applicable, and are the minimum requirements for containment closure.

3.5.3 During Refueling Operations the restrictions of OX1415.03, Refueling Containment Integrity Verification is applicable, and are the minimum requirements for containment closure. Refueling Operations are encompassed by the Fuel handling accident and do not account for a loss of the RHR system that still requires containment closure within 4 hours by closing all penetrations. The requirements are less stringent once refueling operations conditions are established, Reactor Cavity is greater than or equal to 23 feet and the upper internals are removed. Tracking of the penetrations, but not manning, will need to be maintained to meet the 4-hour Technical Specification requirements if a loss of RHR would occur.

3.5.4 During Refueling Operations, the PRA requirements for containment closure may be more restrictive than Technical Specifications. Refer to Chapter 7 of the Work Management Manual (NAWM) OUTAGE SAFETY GUIDELINES for specific penetration manning and closure requirements (i.e. closure within the time to boiling).

3.6 Containment closure can be maintained by the MSIVs and/or FWIVs with an actuator(s) removed and the valve(s) closed. Refer to Engineering Evaluation 91-25 (Ref. 5.6) for further details.

4. INSTRUCTIONS

4.1 Establishing a Baseline Status of Containment Penetrations.

☐ 4.1.1 LOCATE containment penetrations using Figure 3, Penetration Index.

4.1.2 VERIFY containment penetrations using the following:

☐ • Figure 4, Containment Penetration Locations.

☐ • Figure 5, Containment Penetration Integrity Criteria.

☐ • Figure 6, Valves Associated With Penetrations.

☐ 4.1.3 DOCUMENT any exceptions of Containment Integrity on Form A.

☐ 4.1.4 REVIEW all applicable work orders, clearance orders, and TMODs for impact on containment integrity.

☐ 4.1.5 If a work activity affects containment integrity, enter the required information on Form A. Mark up the work sheets from Figure 4 referencing the Item Number from Form A.

☐ 4.1.6 MAINTAIN the Form A tracking and the Figure 4 markups current by evaluating and adding new work activities and deleting completed work activities.

☐ 4.1.7 If a work activity affects containment closure:

- CONTACT the supervisor of the work activity and determine if the work activity will allow containment closure to be established within the RCS time to boil. If not, then notify Shift Manager that the work activity conflicts with the containment closure requirements.
- Record the appropriate information on Form A.

☐ 4.1.8 REFER to OX1415.03 – Refueling Containment Integrity Weekly Verification, for restrictions when refueling is in progress.

☐ 4.1.9 REFER to OS1401.12 – RCS Reduced Inventory Containment Integrity Verification, for restrictions during RCS reduced inventory conditions.

☐ 4.1.10 No restrictions are imposed on work affecting containment closure when the reactor is defueled. If directed by the Operations Manager, tracking of work affecting containment closure may be terminated in this condition, but will need to be reestablished prior to entering a refueling condition.

5. REFERENCES

5.1 UFSAR, Table 6.2-83, (Rev. 3)

5.2 TS 3.9.4, Containment Building Penetrations

5.3 Generic Letter 88-17, (10/17/88)

5.4 UFSAR, Table 6.2-92

5.5 NAWM, Chapter 7

5.6 CR 06-02240, Engineering Evaluation 91-25

6. SUMMARY OF CHANGES

6.1 Rev. 01: No changes made; converted to format specified in MNPR, PR 3.2. This procedure was converted on August 31, 1998.

6.2 Rev. 01 Chg. 01 (April 2002)

- Added MS-V-127 to Figure 4.
- Added Note to Figure 4 to state that the equipment in this table is also included in the Master Equipment List..

6.3 Rev. 01 Chg. 02 (June 2002)

- Added Precaution 3.2 regarding temporary closures as recommended by CR 02-07833.

6.4 Rev. 01 Chg. 03 (December 2002)

- License amendment 85 deleted (Rev. 00) in step 5.2. License amendment 85.

6.5 Rev. 01 Chg. 04 (January 2003)

- Corrected error on penetration graphic for X-52A and X-52B.

6.6 Rev. 01 Chg. 05 (May 2003)

- Editorial changes per CR 02-10806-12.
- Consolidation of ODI.33 into this procedure.

6.7 Rev. 01 Chg. 06 (October 2003)

- DCR 02-21.

6.8 Rev. 01 Chg. 07 (October 2003)

- Incorporate LAR 02-07, which allows use of a Containment Outage Door in place of the Equipment Hatch during Refueling.

6.9 Rev. 01 Chg. 08 (October 2003)

- Removed administrative requirements for containment closure this procedure. The requirements for containment closure are contained in T. S. 3.9.4, 3.9.8.1, and 3.9.8.2. OX1415.03 and OS1401.12 contain the surveillance requirements for ensuring that both the TS and the requirements of Generic Letter 88-17 are complied with.

6.10 Rev. 01 Chg. 09 (March 2005)

- Corrected a typo in Figure 3.

- Removed ITS references.

6.11 Rev. 01 Chg. 10 (June 2006)

- Added new Precaution 3.7 and Reference 5.6 to describe Containment closure with MSIV/FWIV actuator(s) removed and associated valve(s) closed. This enhancement is per CR 06-02240 and Engineering Evaluation 91-25.

6.12 Rev. 01 Chg. 11 (September 2006) typed field change

- Removed precaution pertaining to containment closure requirements during reactor head removal and installation.

- Changed precaution 3.5.4 to state that the PRA requirements for containment closure may be more restrictive than plant Technical Specifications. (CR 06-06861)

Figure 1: Deleted

(THIS PAGE LEFT BLANK)

Figure 2: Deleted

(THIS PAGE LEFT BLANK)

Figure 3: Penetration Index

(Sheet 1 of 2)

Number	Description	Figure 4, Sheet No.
X-1	SG A	1 of 41
X-2	SG B	2 of 41
X-3	SG C	3 of 41
X-4	SG D	4 of 41
X-5	SG A	1 of 41
X-6	SG B	2 of 41
X-7	SG C	3 of 41
X-8	SG D	4 of 41
X-9	Reactor Coolant	5 of 41
X-10	Reactor Coolant	5 of 41
X-11	RHR	6 of 41
X-12	RHR	6 of 41
X-13	RHR	6 of 41
X-14	CBS Spray Train A	7 of 41
X-15	CBS Spray Train B	7 of 41
X-16	COP Return	8 of 41
X-17	Containment Vent Header	9 of 41
X-18	COP Supply	10 of 41
X-19	Post Accident Sample	11 of 41
X-20	PCCW Supply Train A	12 of 41
X-21	PCCW Return Train A	13 of 41
X-22	PCCW Return Train B	13 of 41
X-23	PCCW Supply Train B	12 of 41
X-24	High Head Injection	14 of 41
X-25	Safety Injection	15 of 41
X-26	Safety Injection	15 of 41
X-27	Safety Injection	15 of 41
X-28	RCP A Seal Injection	16 of 41
X-29	RCP B Seal Injection	17 of 41
X-30	RCP C Seal Injection	18 of 41
X-31	RCP D Seal Injection	19 of 41
X-32	RCDT Discharge	20 of 41
X-33	Charging	21 of 41
X-34	Cntmt. Sump Discharge	22 of 41
X-35A	SI Accum Fill & Test Line	23 of 41
X-35B	PZR Sample	23 of 41
X-35C	RCS Loop 1 Sample	23 of 41
X-35D	RCS Loop 3 Sample	23 of 41
X-36A	DM Supply to Containment	24 of 41
X-36B	Accumulator Nitrogen	24 of 41

(Continued)

Figure 3: Penetration Index

(Sheet 2 of 2)

Number	Description	Figure 4, Sheet No.
X-36C	RMW	24 of 41
X-37A	Normal Letdown	25 of 41
X-37B	Seal Water Ret/Ex Letdown	25 of 41
X-38A	Fire Protection	26 of 41
X-38B	CGC Backup Purge	26 of 41
X-39	Skimmer Pump Discharge	27 of 41
X-40A	N2 Supply to PRT and SG	28 of 41
X-40B	PRT Sample	28 of 41
X-48A	Thermal Barrier Supply	29 of 41
X-48B	Thermal Barrier Return	29 of 41
X-49A	Thermal Barrier Supply	29 of 41
X-49B	Thermal Barrier Return	29 of 41
X-52A	Containment Pig Supply	30 of 41
X-52B	Containment Pig Return	30 of 41
E-58	Sludge Lance	31 of 41
E-59	Sludge Lance	32 of 41
X-60	Containment Recirc Sump	33 of 41
X-61	Containment Recirc Sump	33 of 41
X-62	Fuel Transfer Tube	34 of 41
X-63	'A' SG Blowdown	35 of 41
X-64	'B' SG Blowdown	35 of 41
X-65	'C' SG Blowdown	35 of 41
X-66	'D' SG Blowdown	35 of 41
X-67	Service Air	36 of 41
X-68	Instrument Air	37 of 41
X-71A	H2 Analyzer Inlet- Train B	38 of 41
X-71B	H2 Analyzer Return - Train B	38 of 41
X-71C	CGC Backup Purge Return	38 of 41
X-71D	CGC Instrumentation	38 of 41
X-72A	H2 Analyzer Inlet - Train A	38 of 41
X-72B	H2 Analyzer Return- Train A	38 of 41
X-72C	CGC Backup Purge Return	38 of 41
X-74A	H2 Analyzer Inlet - Train B	38 of 41
X-74B	H2 Analyzer Return - Train B	38 of 41
X-74C	CGC Backup Purge Return	38 of 41
X-74D	CGC Instrumentation	38 of 41
X-75A	H2 Analyzer Inlet - Train A	38 of 41
X-75B	H2 Analyzer Return - Train A	38 of 41
X-75C	CGC Backup Purge Return	38 of 41
X-76A	Fire Protection	26 of 41
X-76B	CGC Backup Purge	26 of 41
X-HVAC-1	CAP Supply	39 of 41
X-HVAC-2	CAP Return	39 of 41
	Equip Hatch Emerg. Exit	40 of 41
	Personnel Hatch	41 of 41

Figure 4: Containment Penetration Locations

(Sheet 1 of 41)

Penetrations: X-1 and X-5

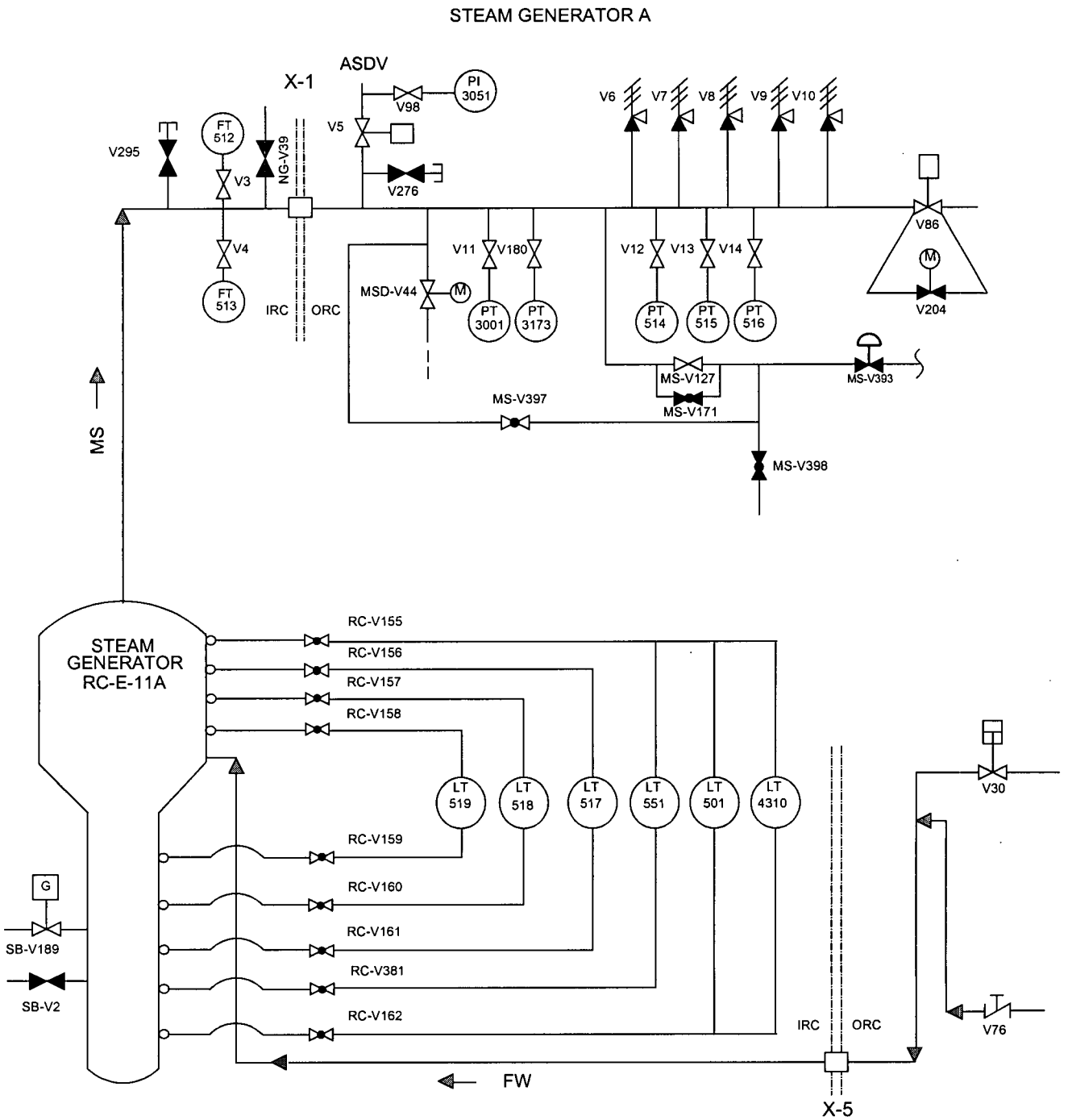

G:\Word\Images\Images_P.OP\ODI33P14.ds4

Figure 4: Containment Penetration Locations

(Sheet 2 of 41)

Penetrations: X-2 and X-6

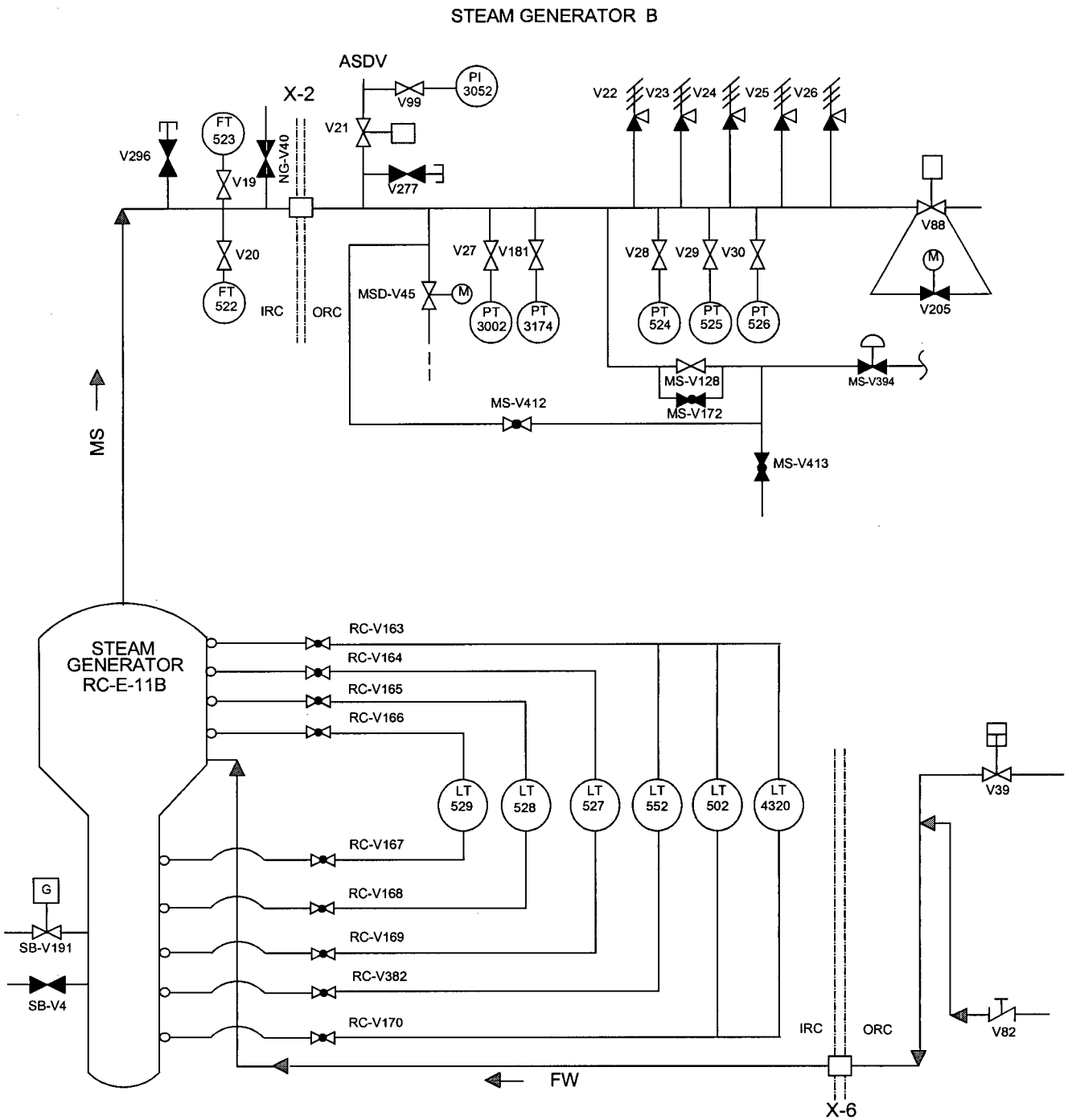

G:\Word\Images\Images_P.OP\ODI33P15.ds4

Figure 4: Containment Penetration Locations

(Sheet 3 of 41)

Penetrations: X-3 and X-7

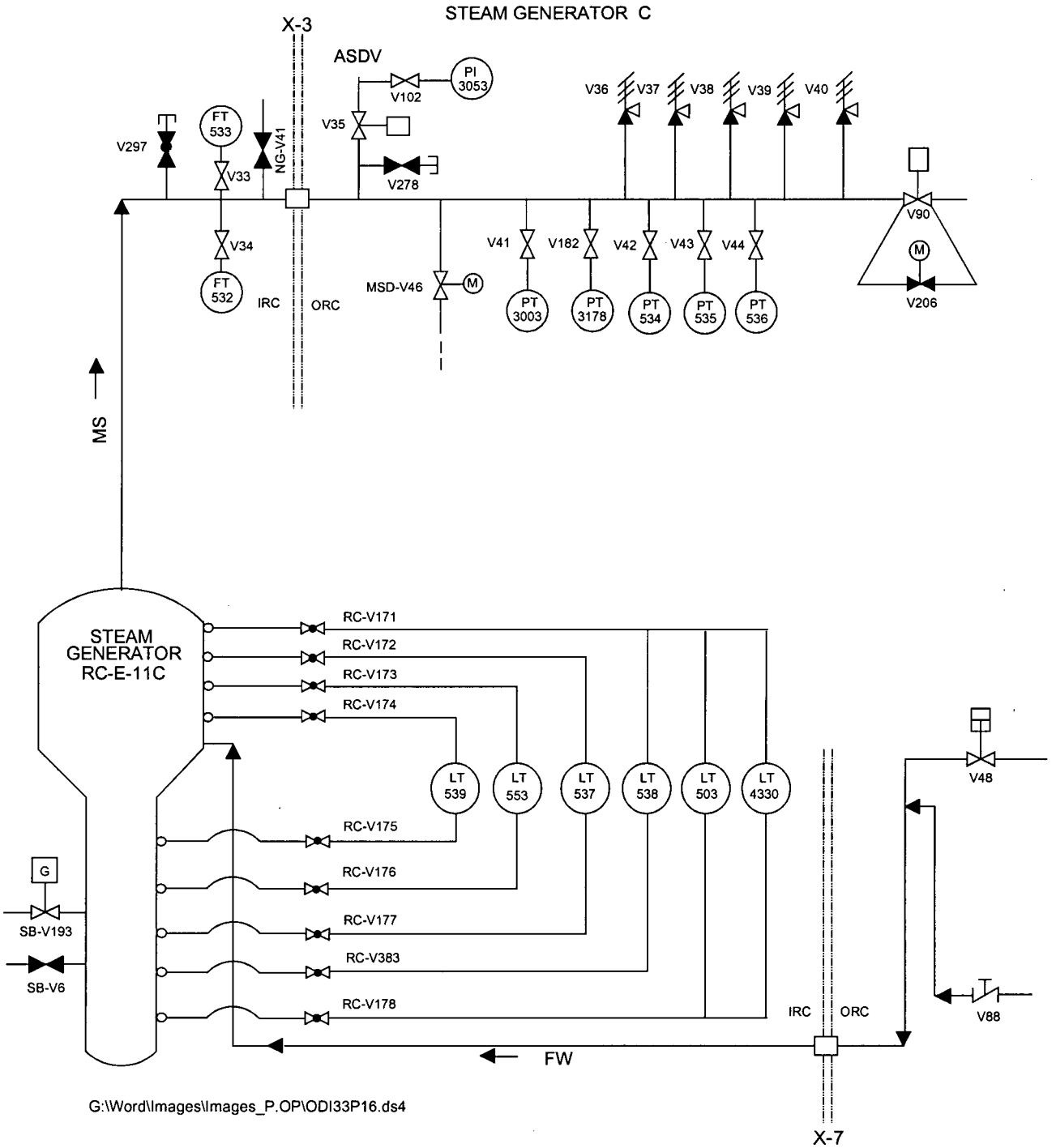

G:\Word\Images\Images_P.OP\ODI33P16.ds4

Figure 4: Containment Penetration Locations

(Sheet 4 of 41)

Penetrations: X-4 and X-8

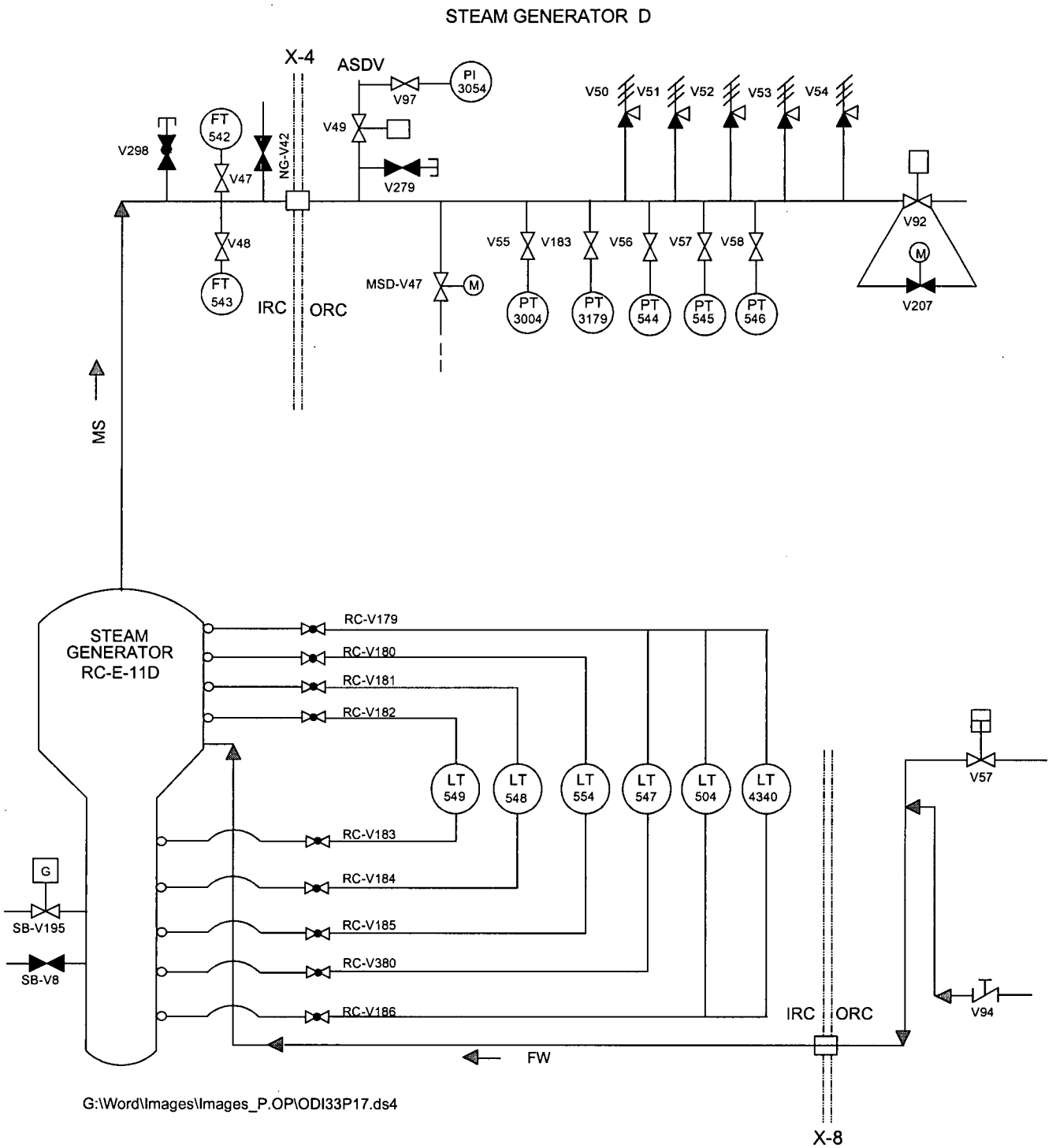

G:\Word\Images\Images_P.OP\ODI33P17.ds4

Figure 4: Containment Penetration Locations

(Sheet 5 of 41)

Penetrations: X-9 and X-10

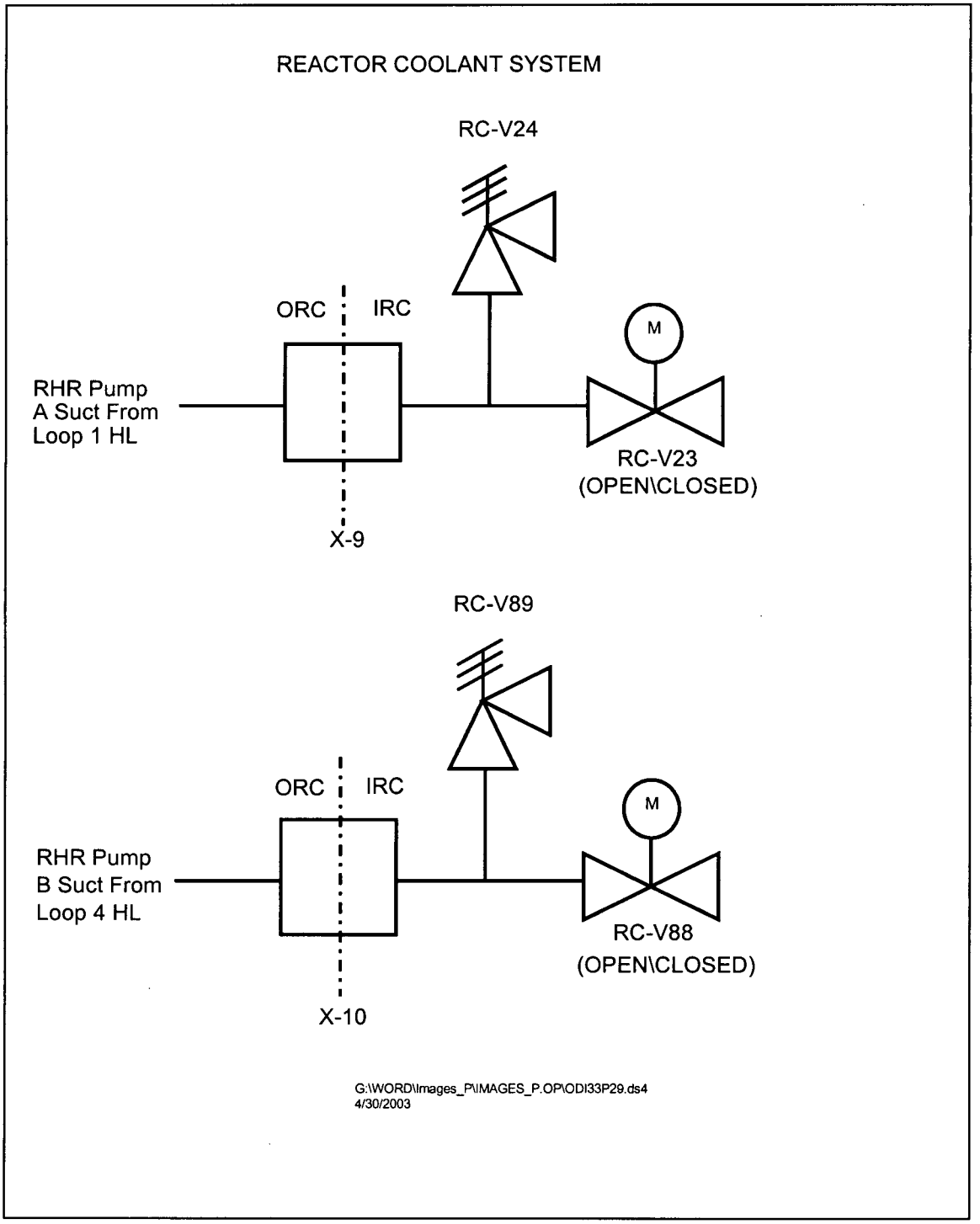

Figure 4: Containment Penetration Locations

(Sheet 6 of 41)

Penetrations: X-11, X-12 and X-13

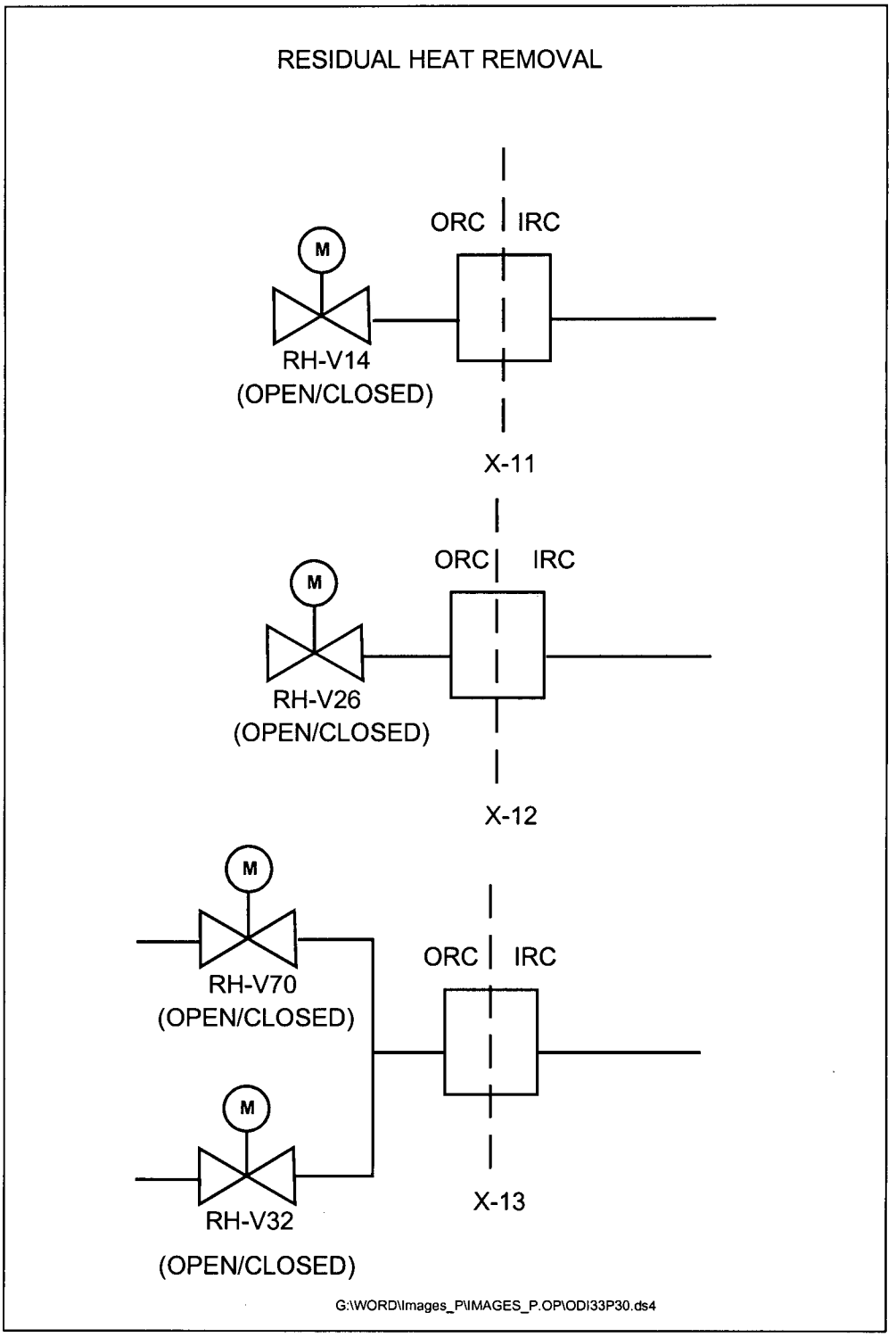

Figure 4: Containment Penetration Locations

(Sheet 7 of 41)

Penetrations: X-14 and X-15

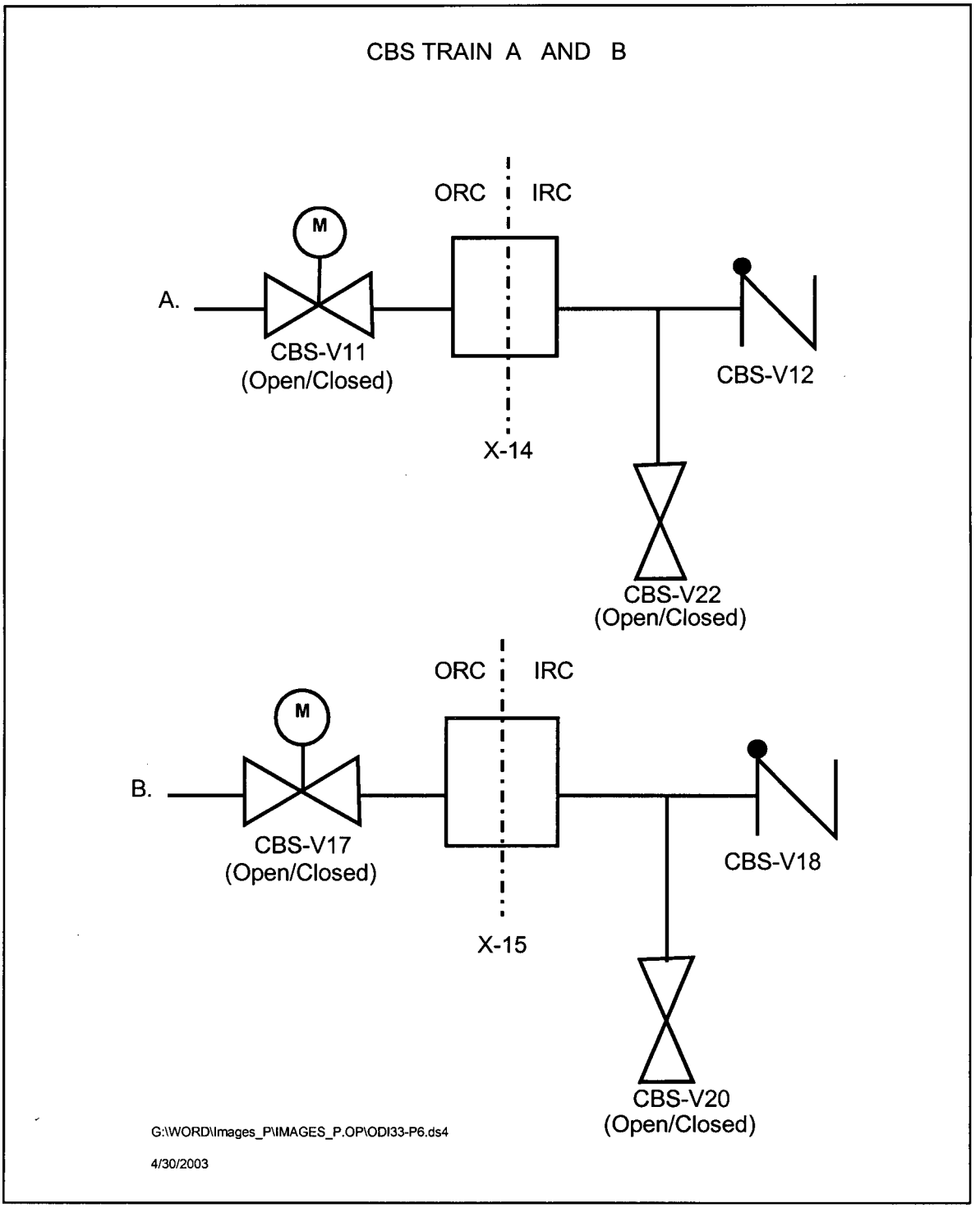

Figure 4: Containment Penetration Locations

(Sheet 8 of 41)

Penetration: X-16

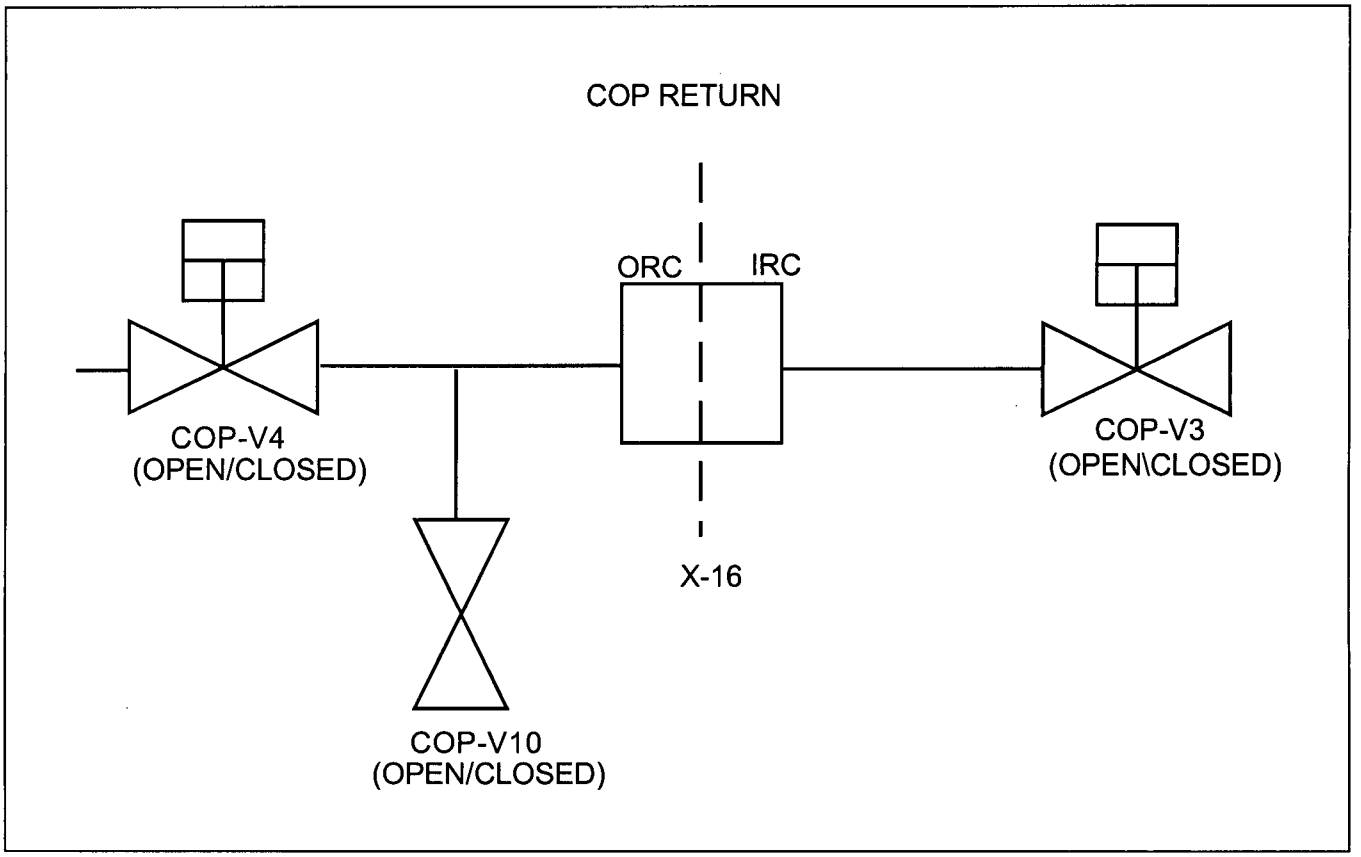

G:\WORD\Images P\IMAGES P.OP\ODI33P56.ds4

Figure 4: Containment Penetration Locations

(Sheet 9 of 41)

Penetration: X-17

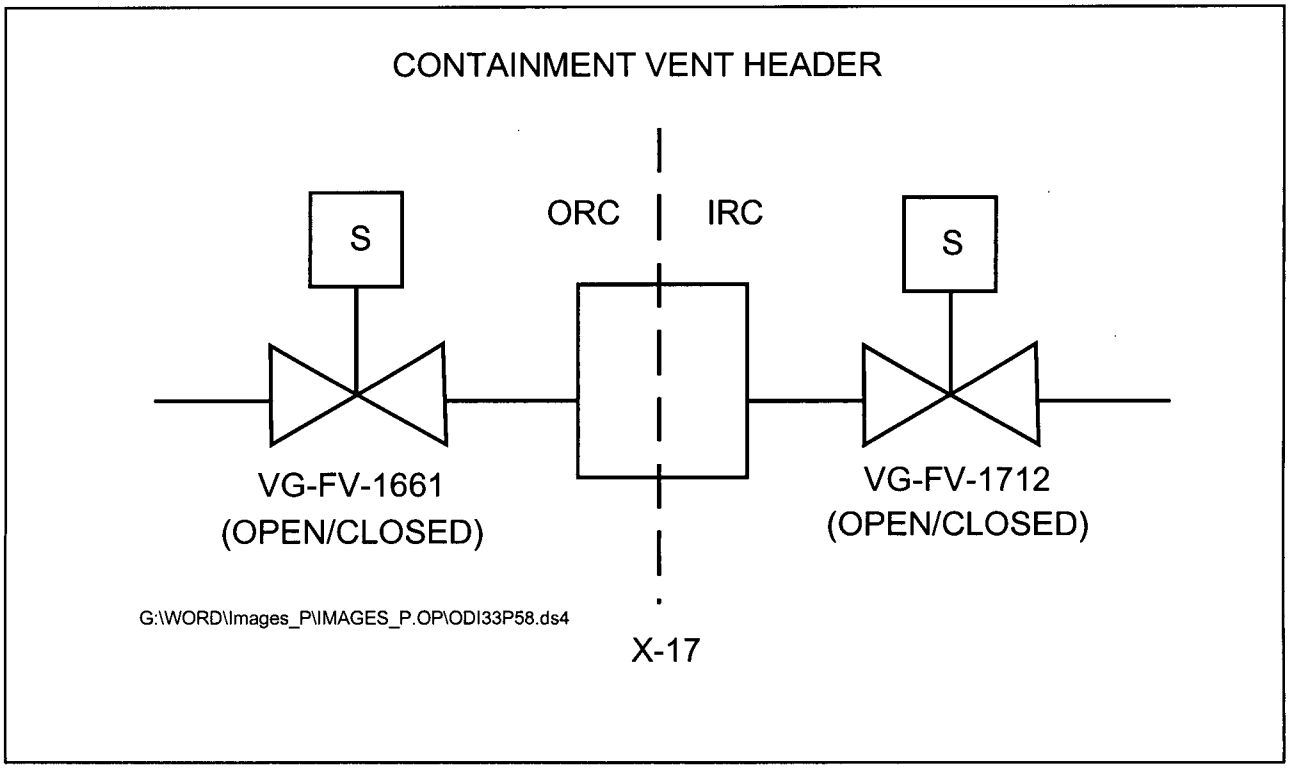

Figure 4: Containment Penetration Locations

(Sheet 10 of 41)

Penetration: X-18

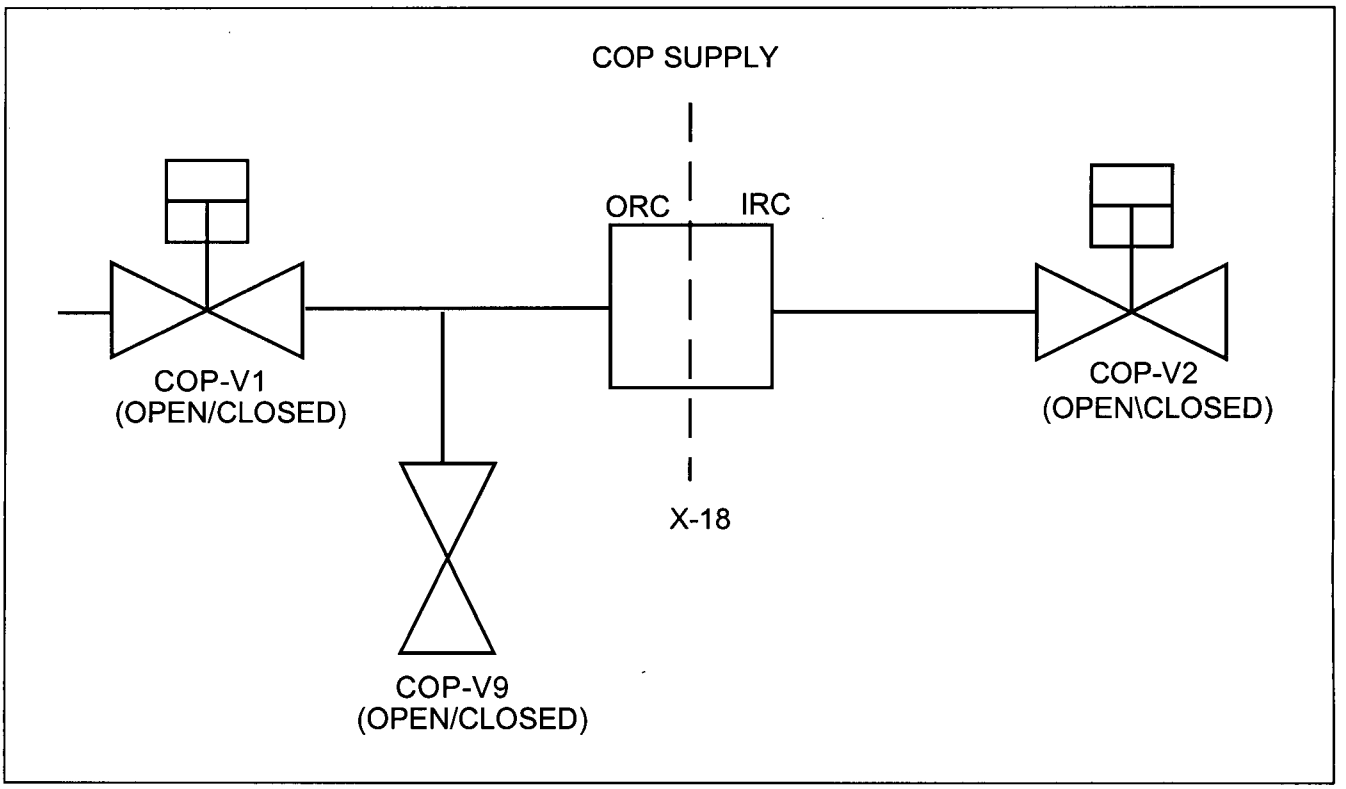

G:\WORD\Images_P\IMAGES_P.OP\ODI33P57.ds4

Figure 4: Containment Penetration Locations

(Sheet 11 of 41)

Penetration: X-19

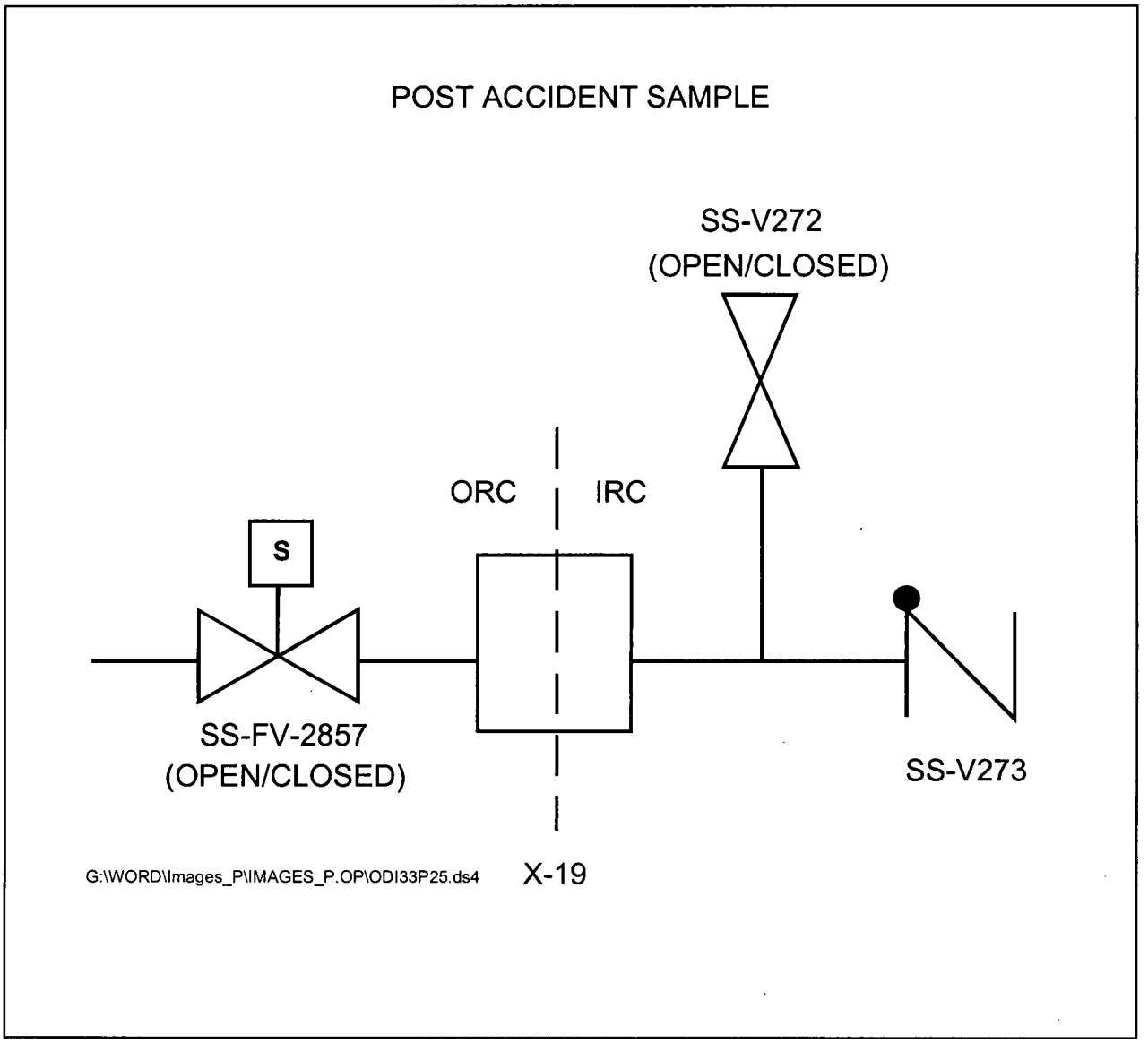

Figure 4: Containment Penetration Locations

(Sheet 12 of 41)

Penetrations: X-20 and X-23

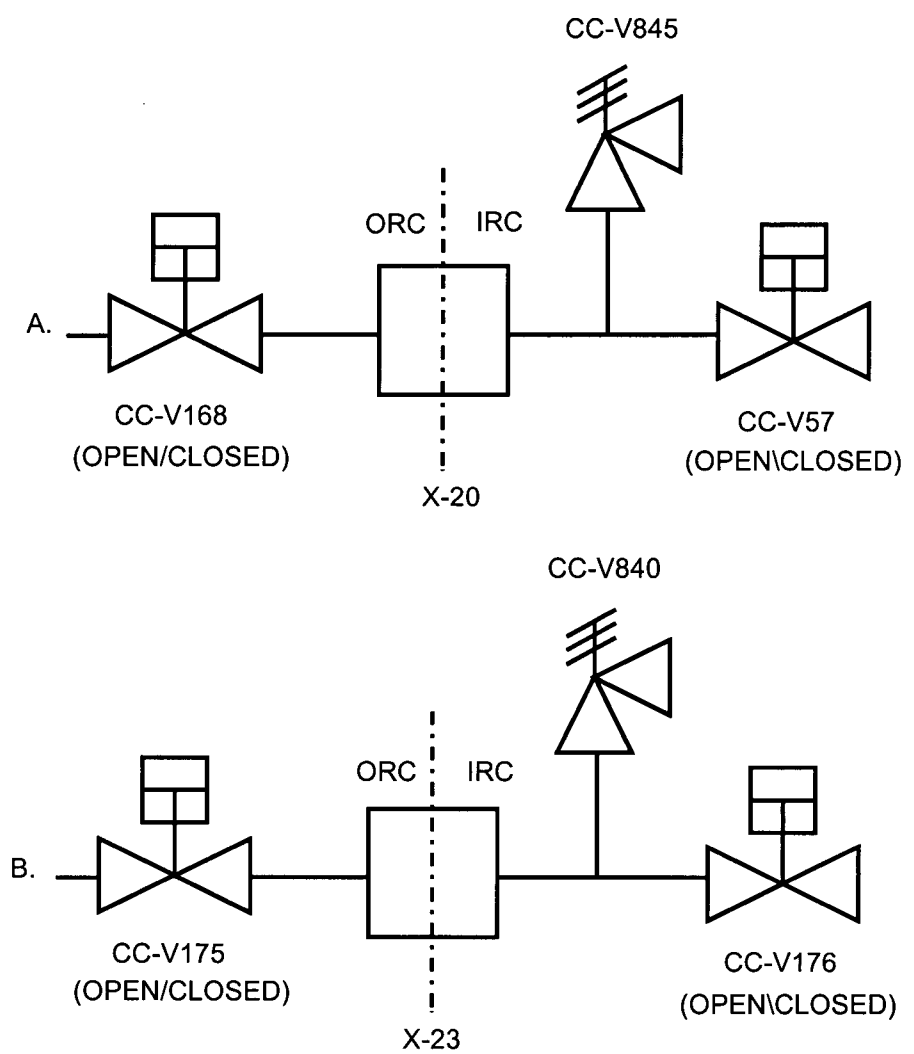

G:\WORD\Images_P\IMAGES_P.OP\ODI33P46.ds4
4/30/2003

Figure 4: Containment Penetration Locations

(Sheet 13 of 41)

Penetrations: X-21 and X-22

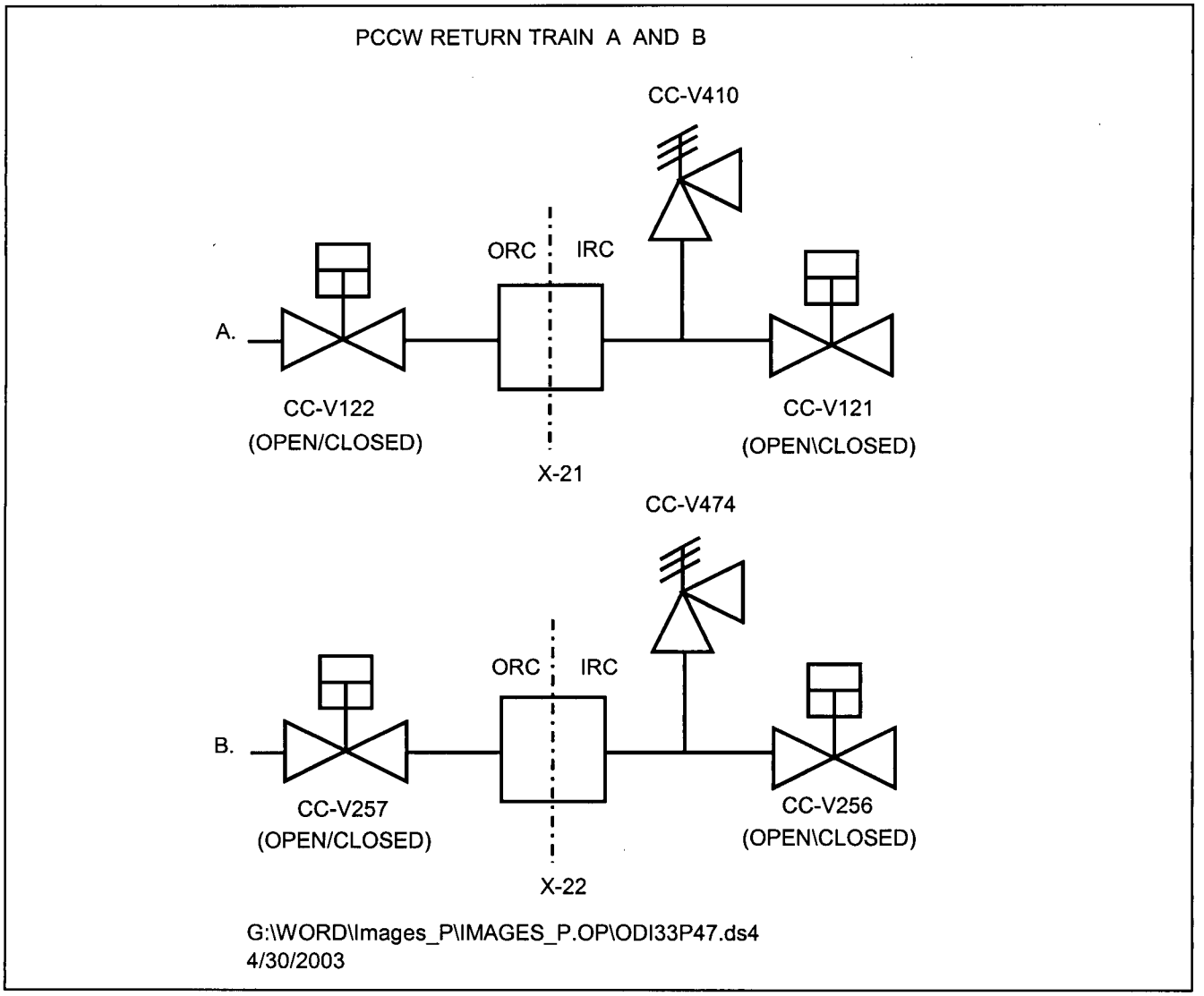

Figure 4: Containment Penetration Locations

(Sheet 14 of 41)

Penetration: X-24

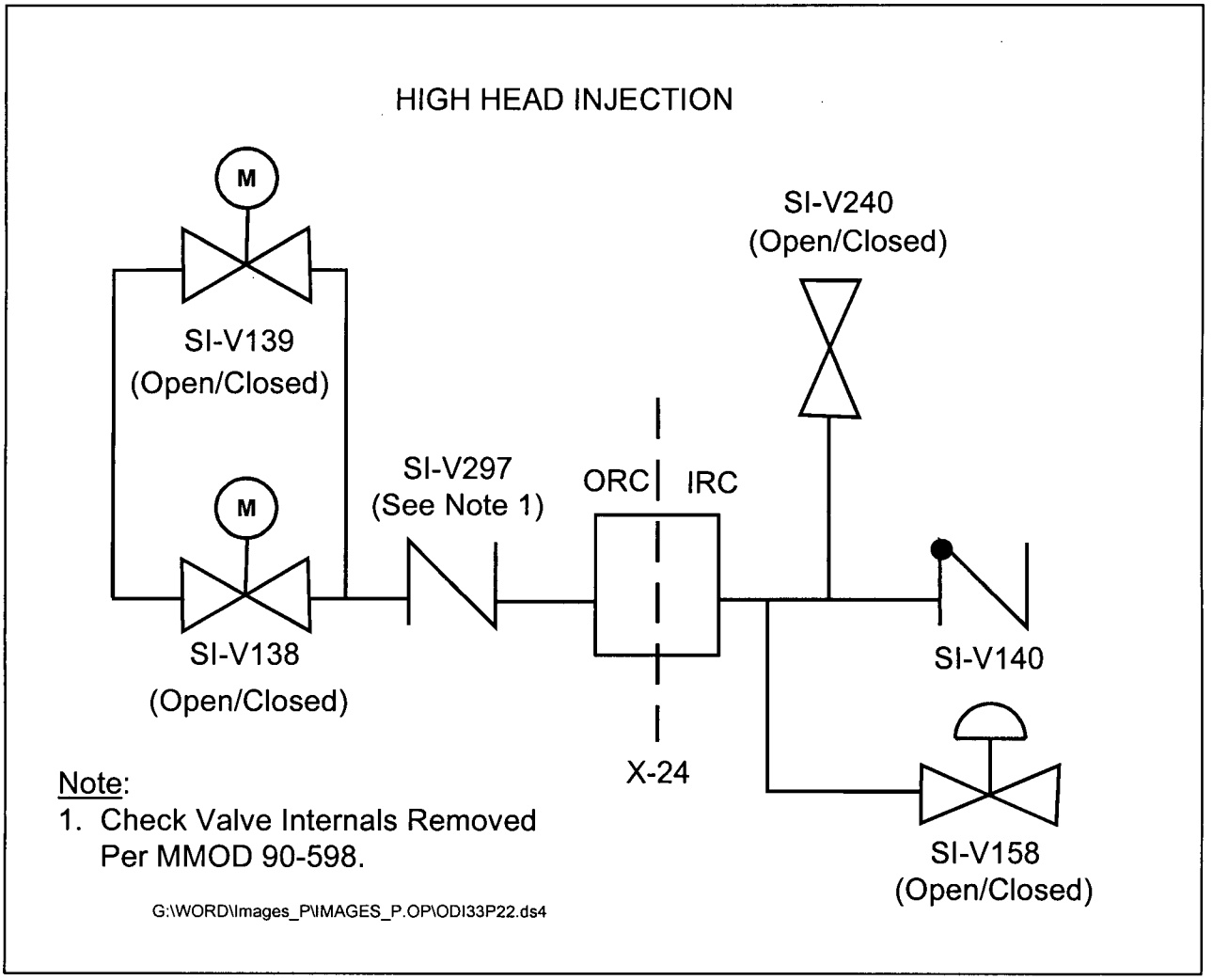

Figure 4: Containment Penetration Locations

(Sheet 15 of 41)

Penetrations: X-25, X-26 and X-27

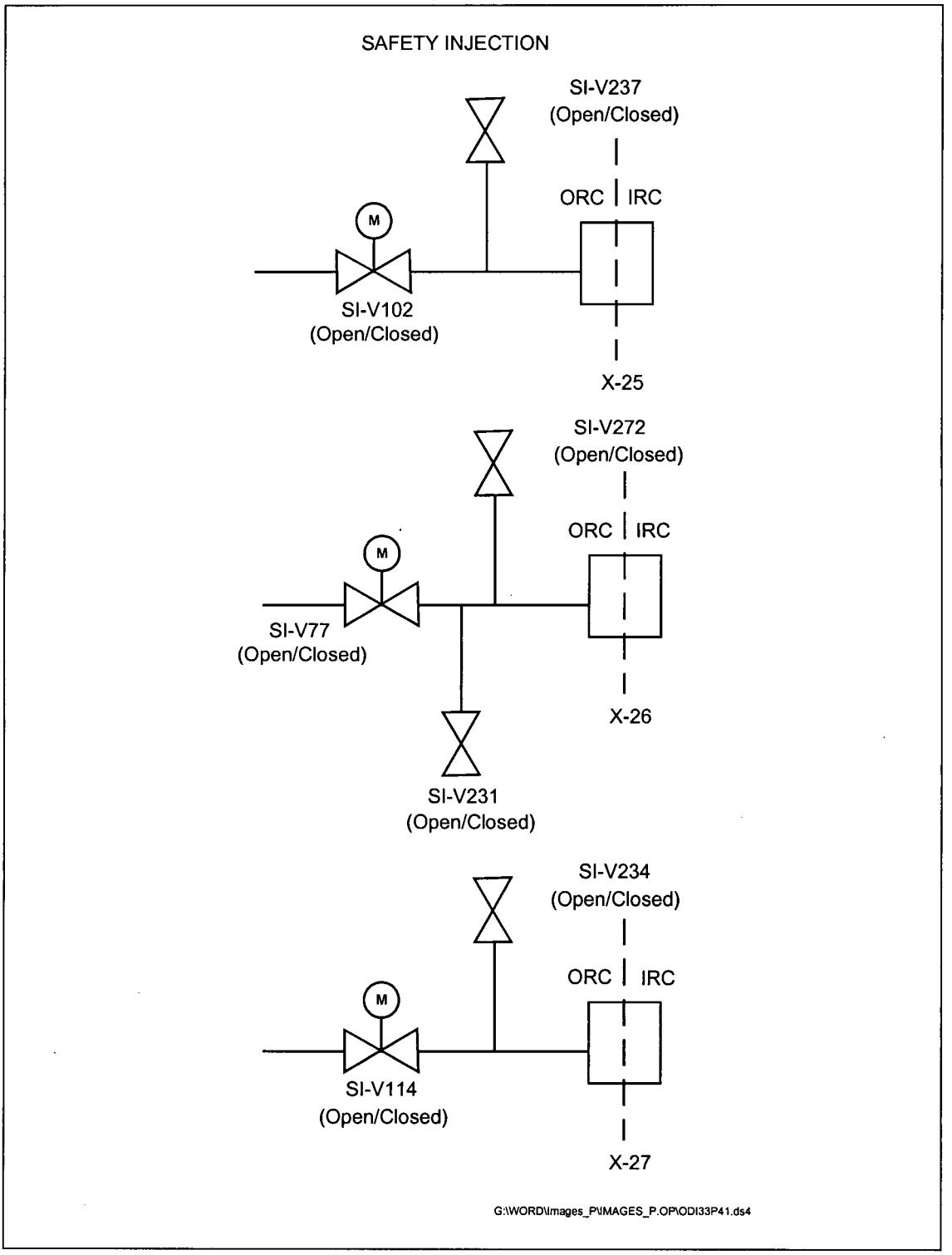

Figure 4: Containment Penetration Locations

(Sheet 16 of 41)

Penetration: X-28

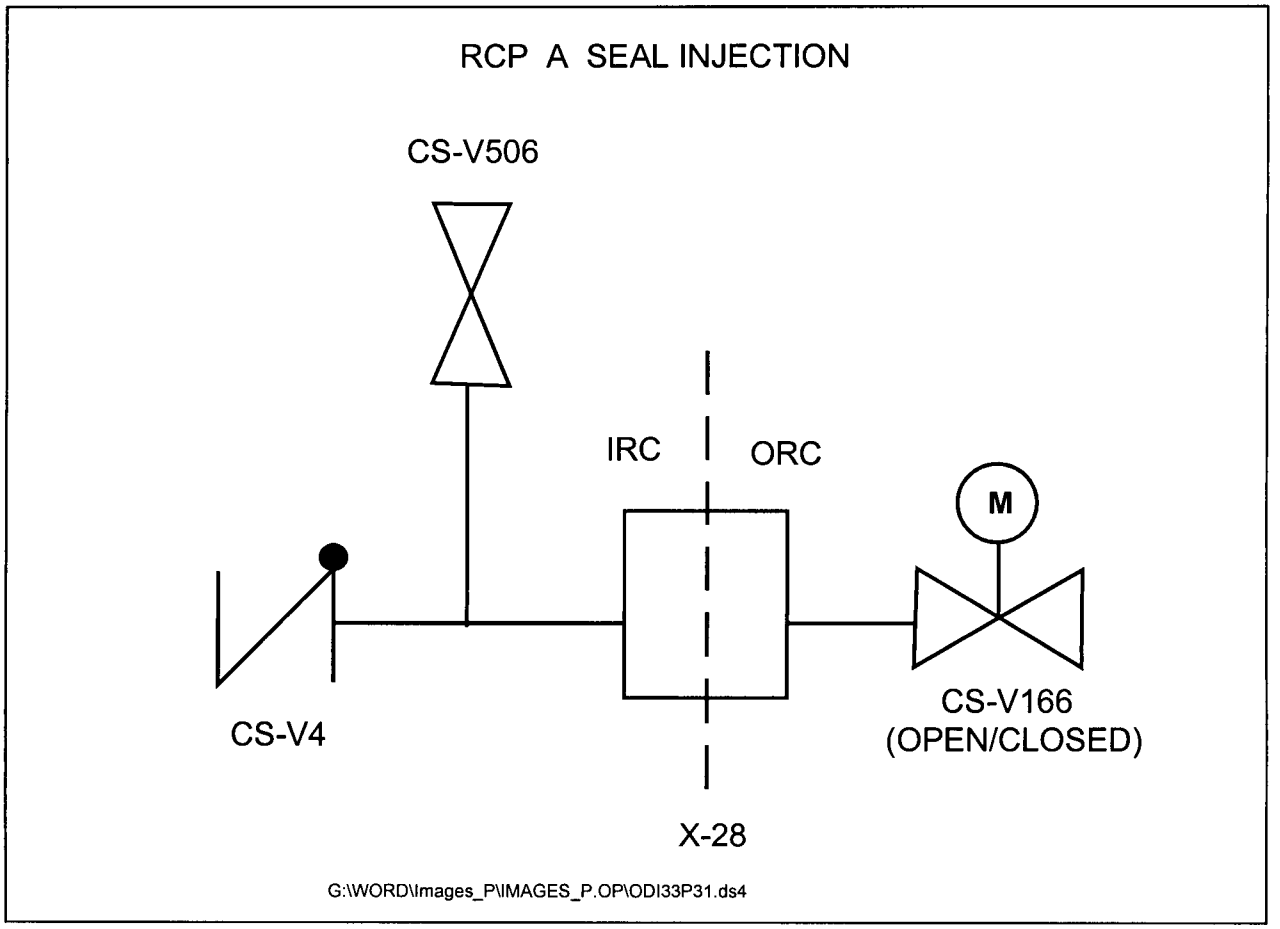

Figure 4: Containment Penetration Locations

(Sheet 17 of 41)

Penetration: X-29

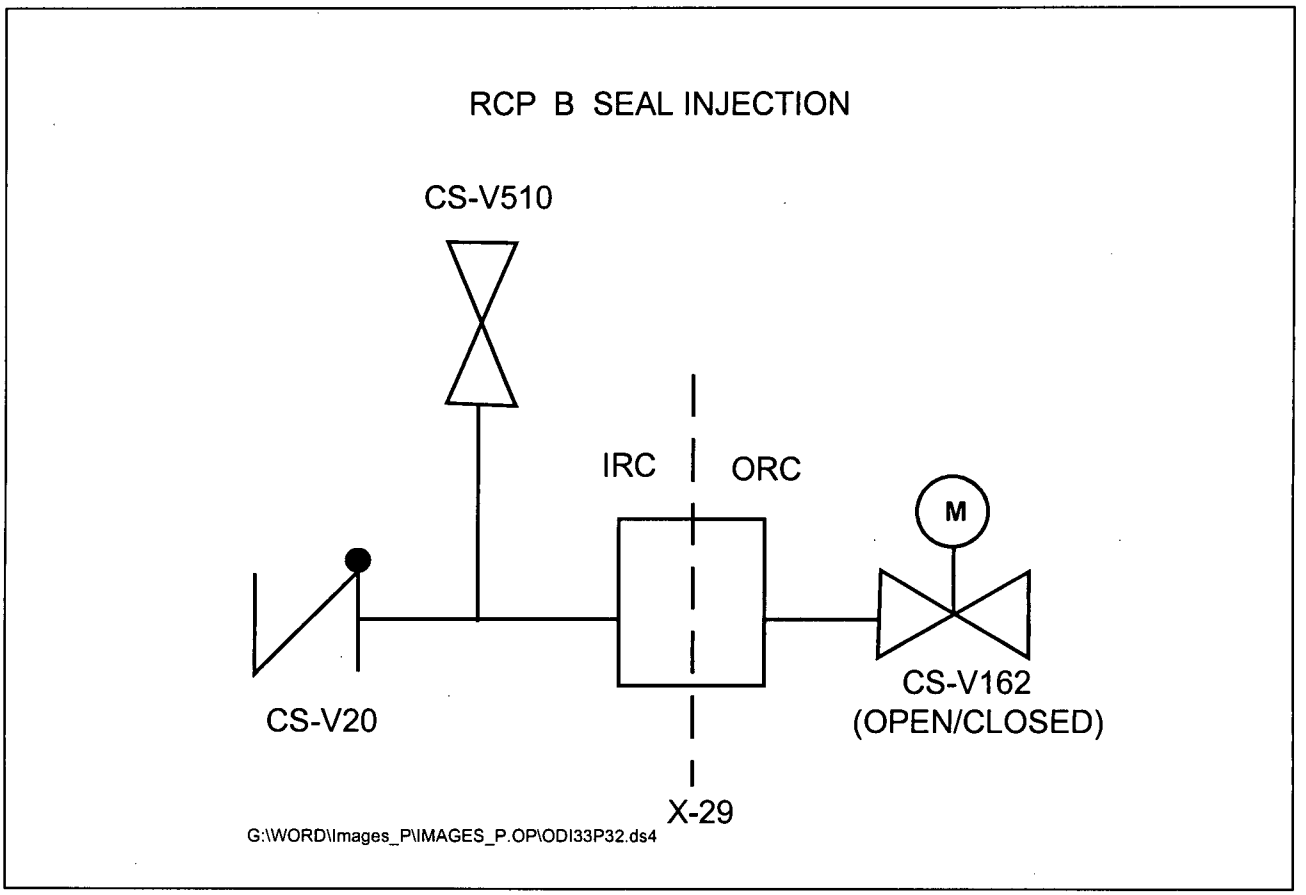

Figure 4: Containment Penetration Locations

(Sheet 18 of 41)

Penetration: X-30

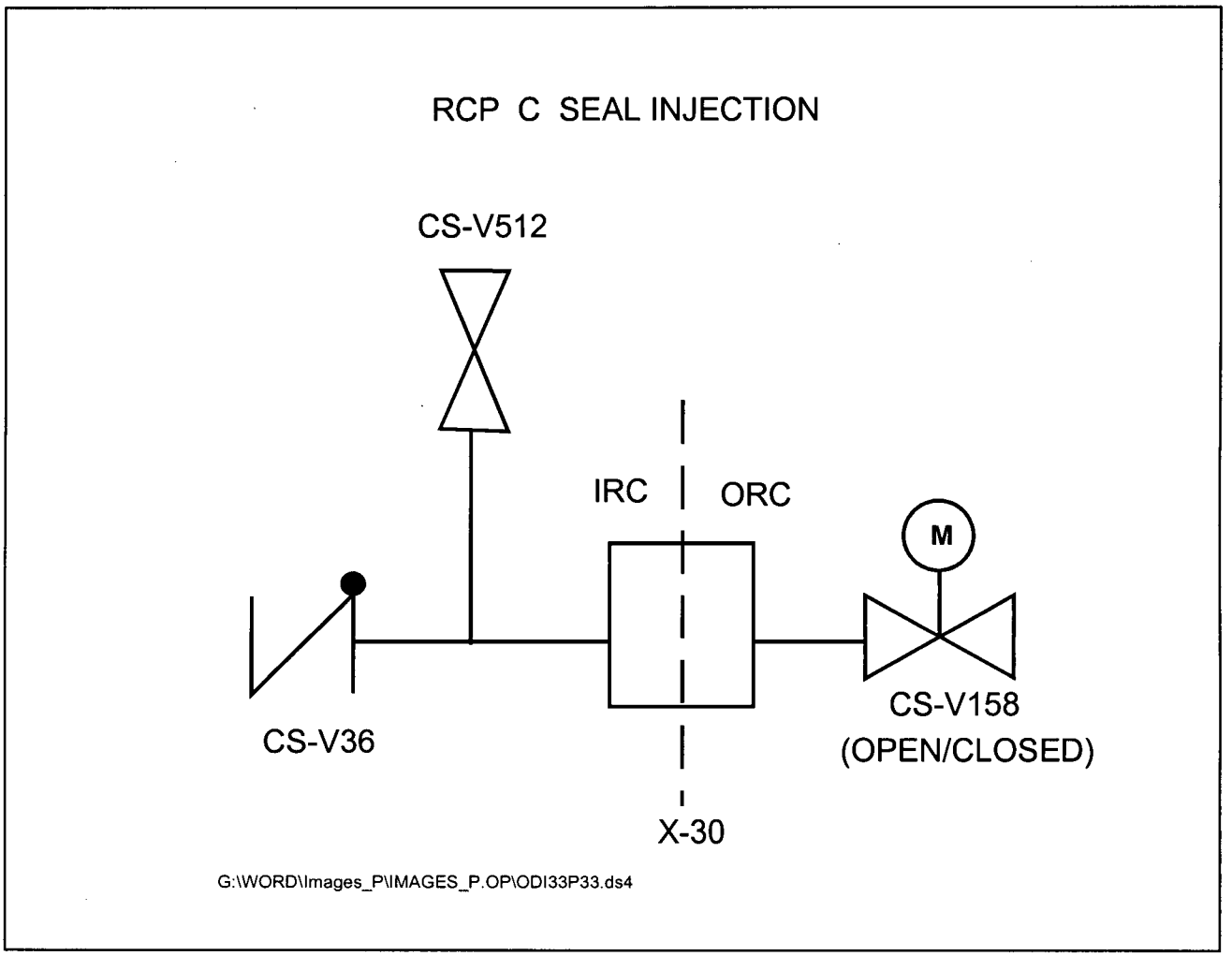

Figure 4: Containment Penetration Locations

(Sheet 19 of 41)

Penetration: X-31

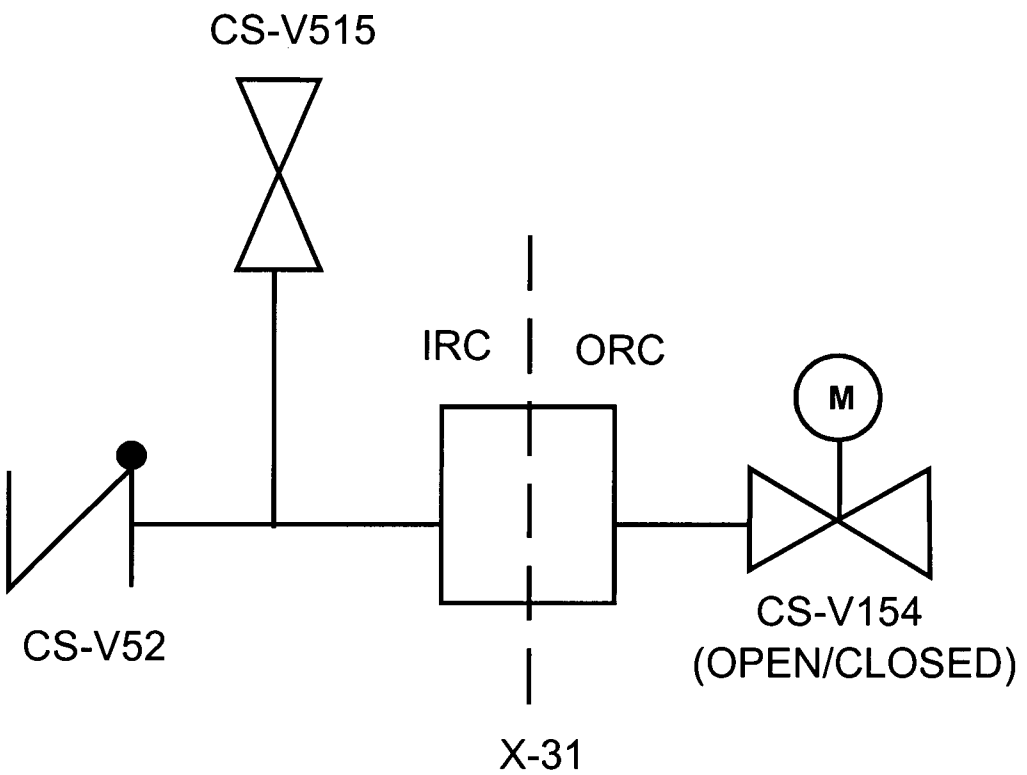

G:\WORD\Images_P\IMAGES_P.OP\ODI33P34.ds4

Figure 4: Containment Penetration Locations

(Sheet 20 of 41)

Penetration: X-32

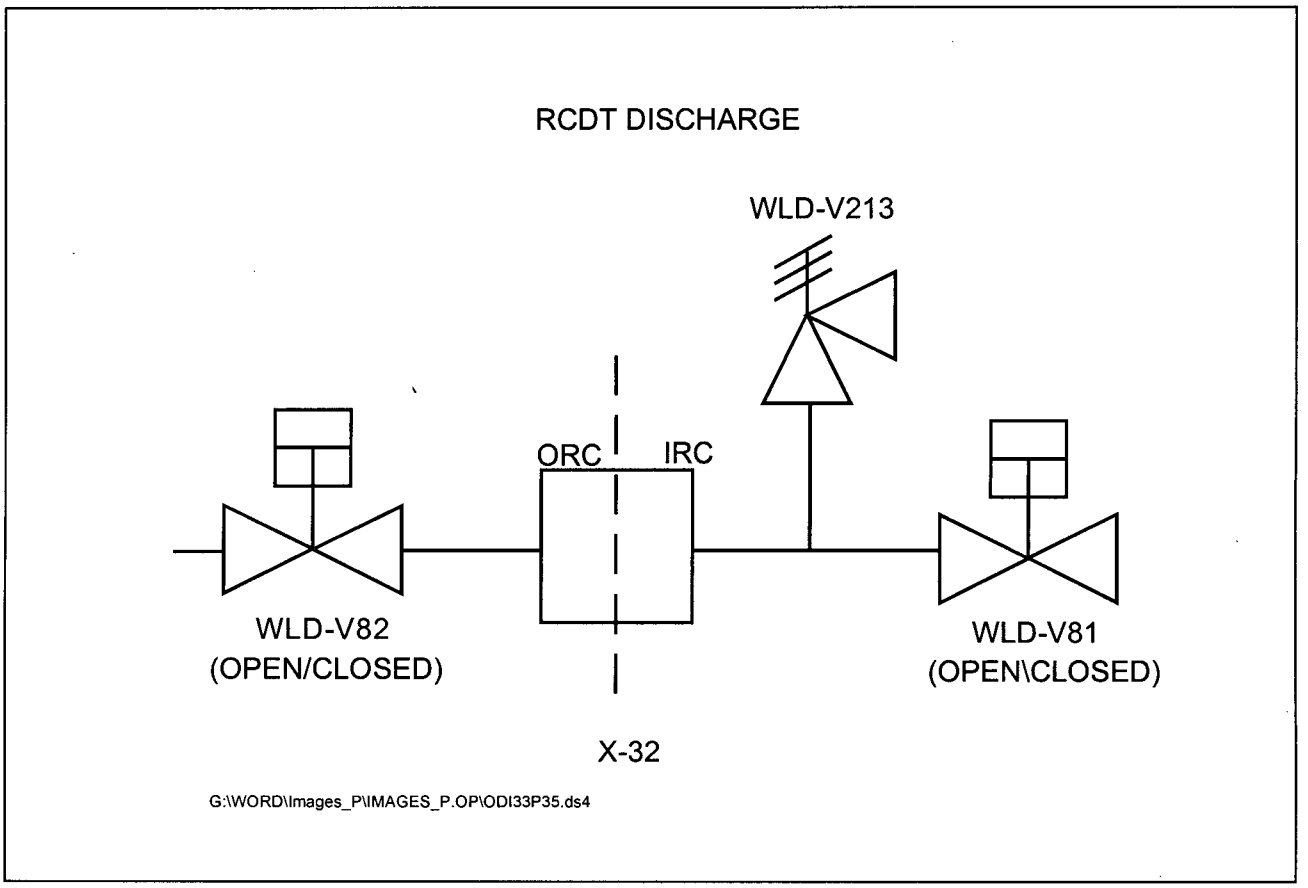

Figure 4: Containment Penetration Locations

(Sheet 21 of 41)

Penetration: X-33

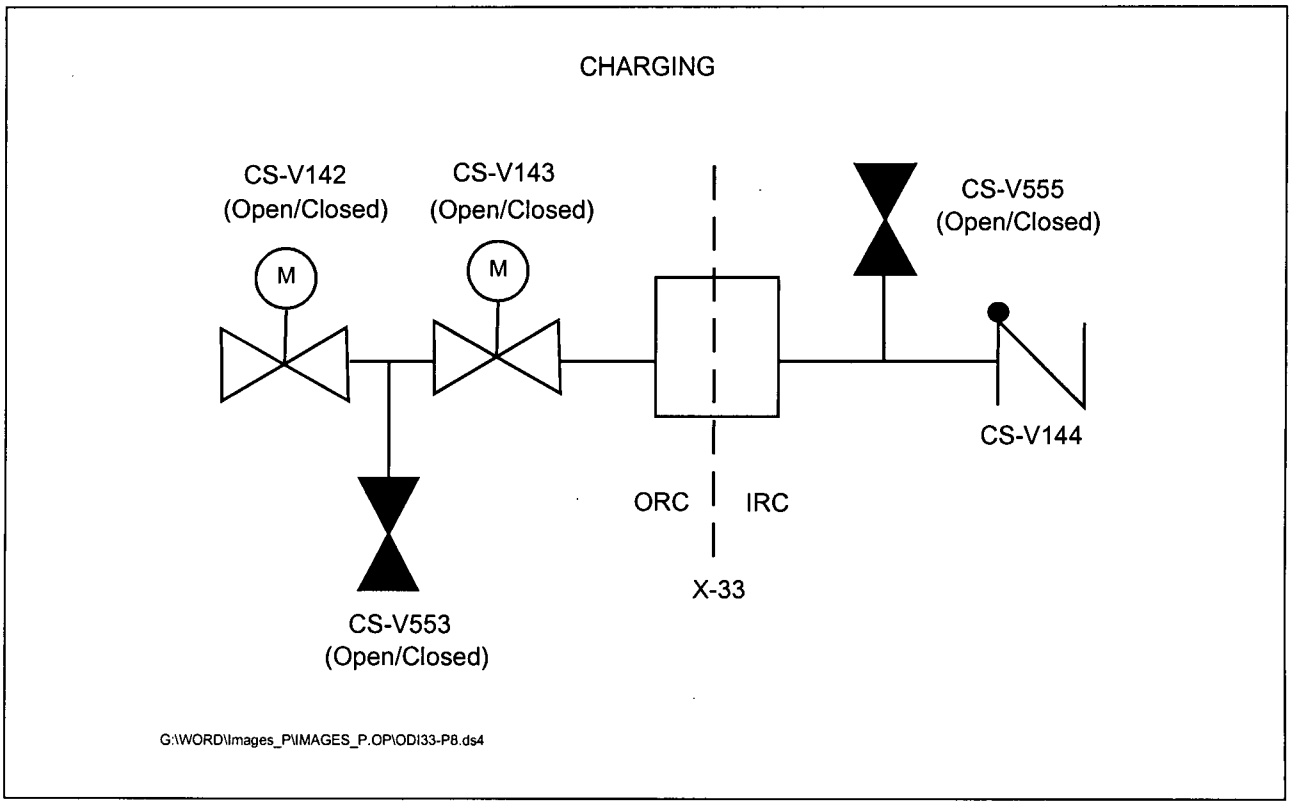

Figure 4: Containment Penetration Locations

(Sheet 22 of 41)

Penetration: X-34

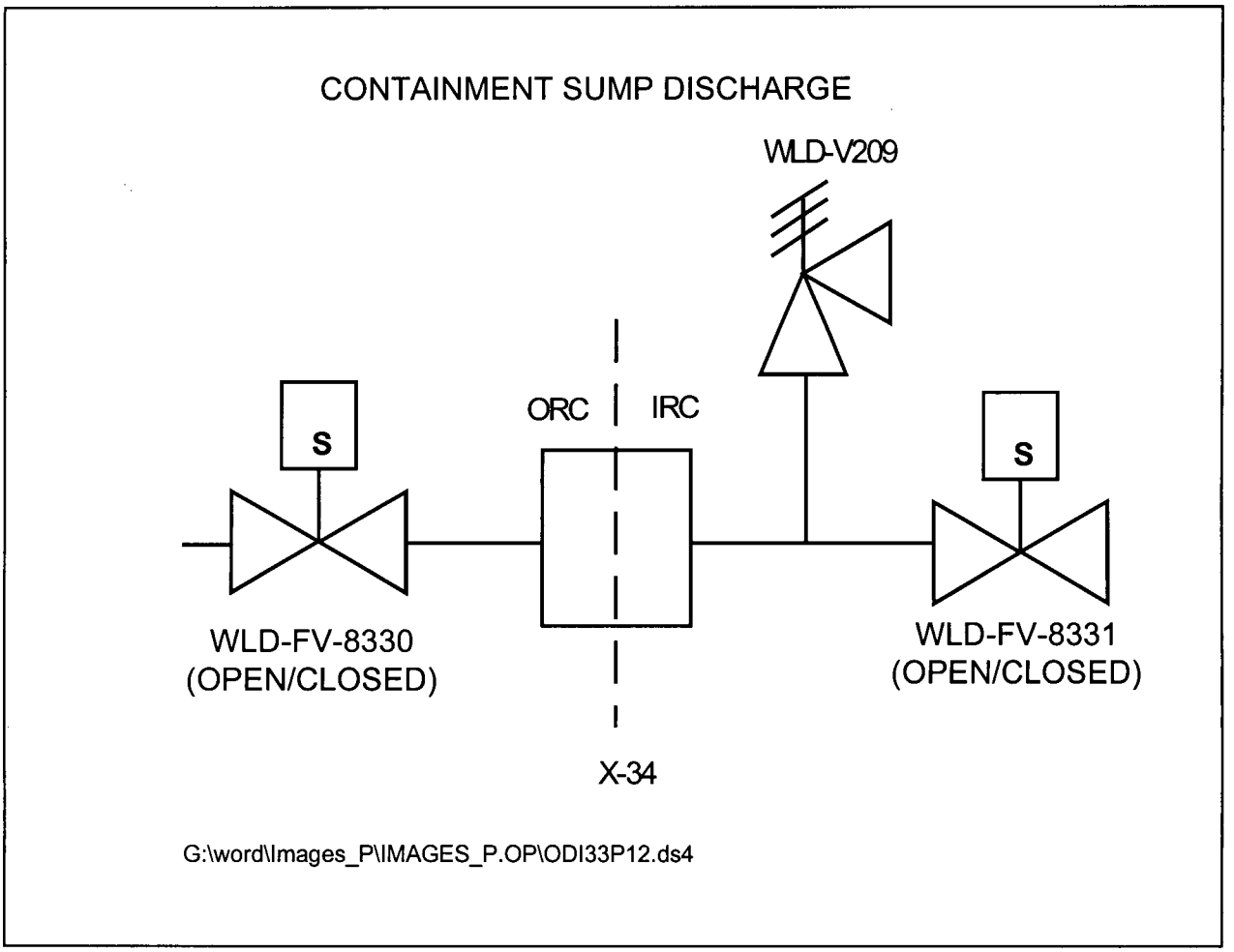

Figure 4: Containment Penetration Locations

(Sheet 23 of 41)

Penetrations: X-35A, X-35B, X-35C and X-35D

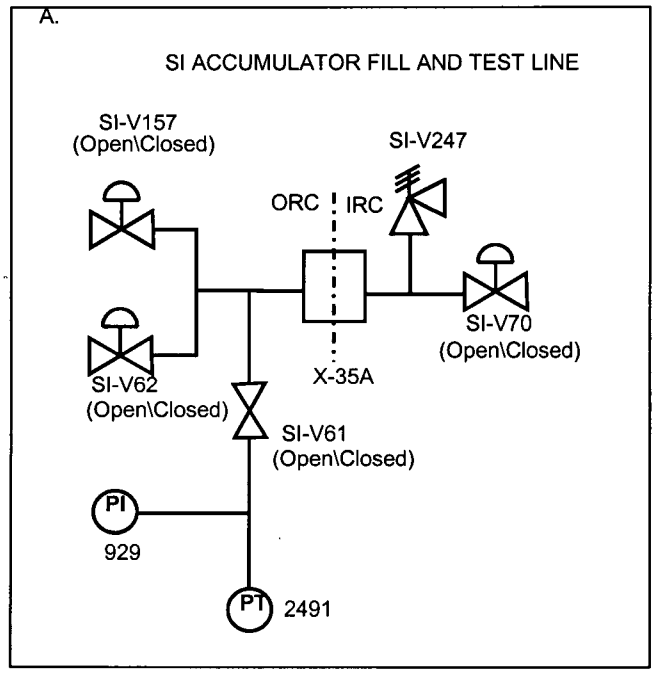

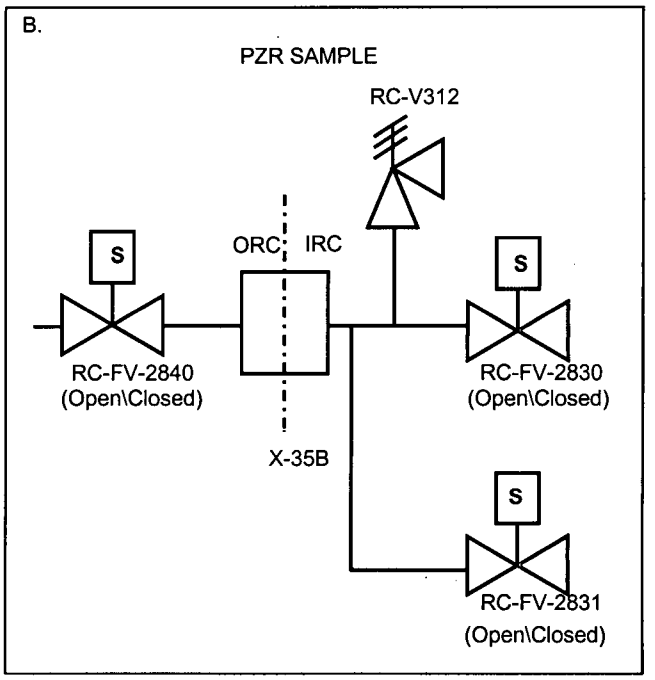

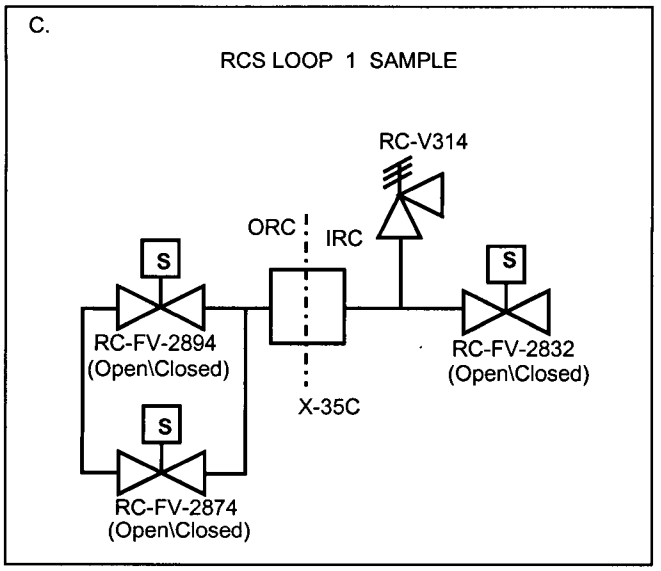

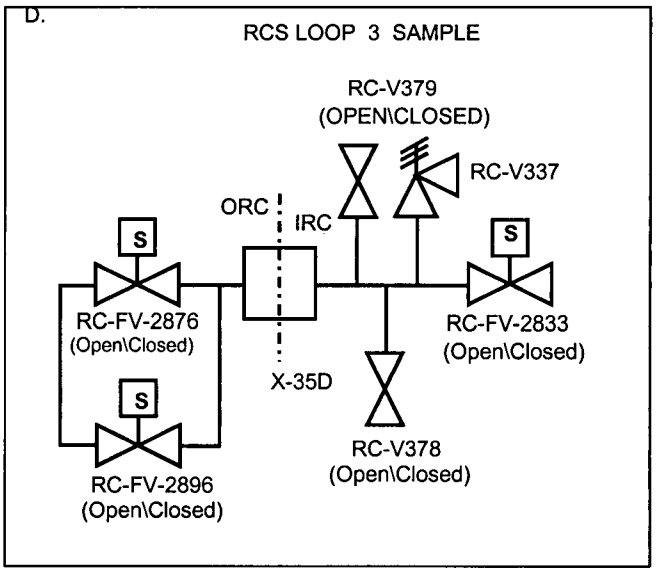

G:\WORD\IMAGES_P\IMAGES_P.OP\PG-23.DS4
4/30/2003

Figure 4: Containment Penetration Locations

(Sheet 24 of 41)

Penetrations: X-36A, X-36B and X-36C

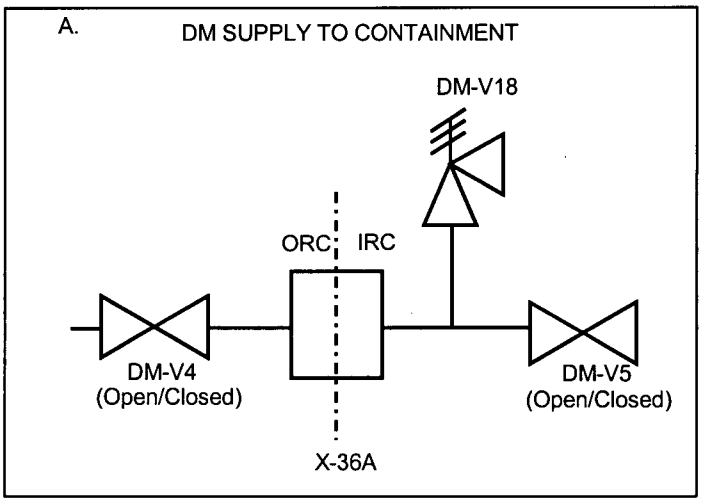

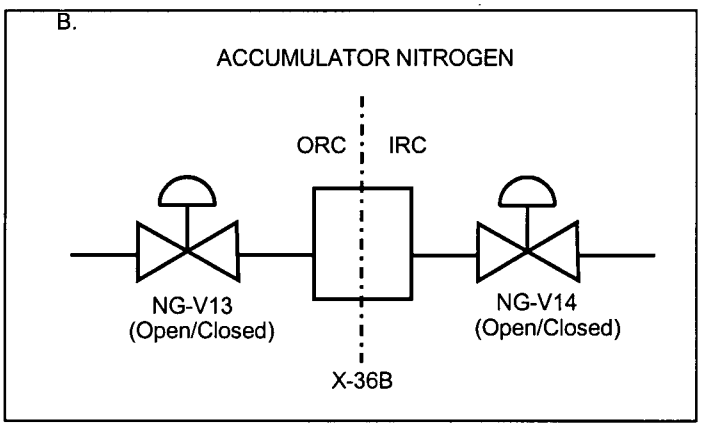

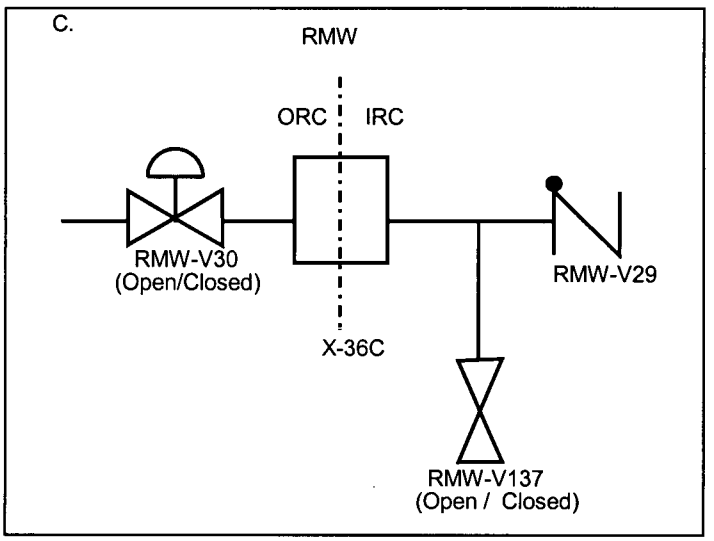

G:\WORD\Images_P\IMAGES_P.OP\PG-24.ds4
4/30/2003

Figure 4: Containment Penetration Locations

(Sheet 25 of 41)

Penetrations: X-37A and X-37B

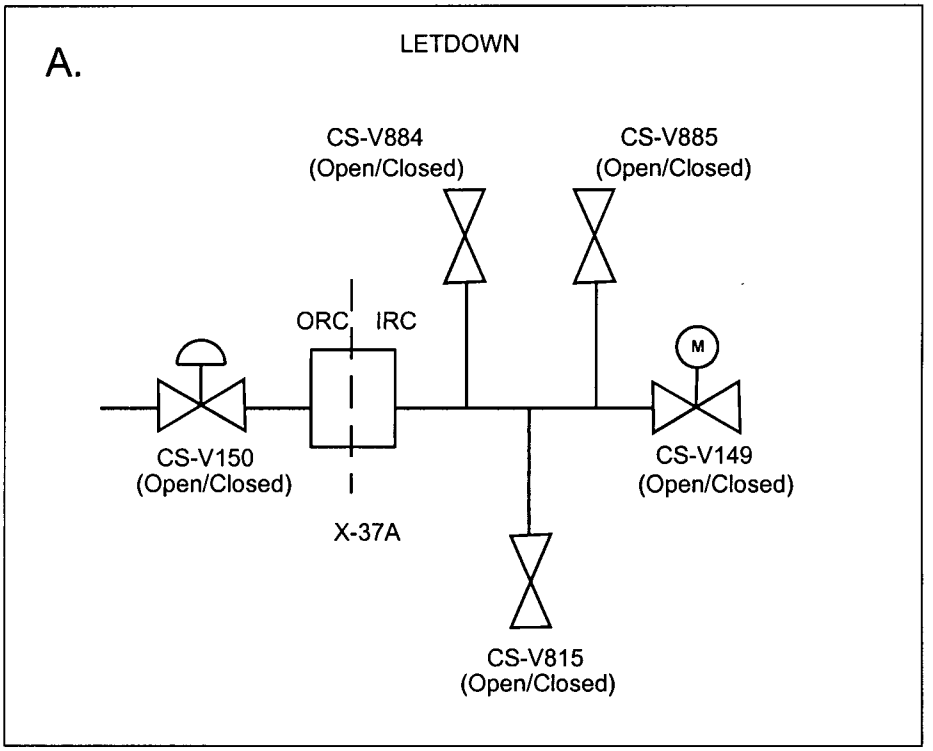

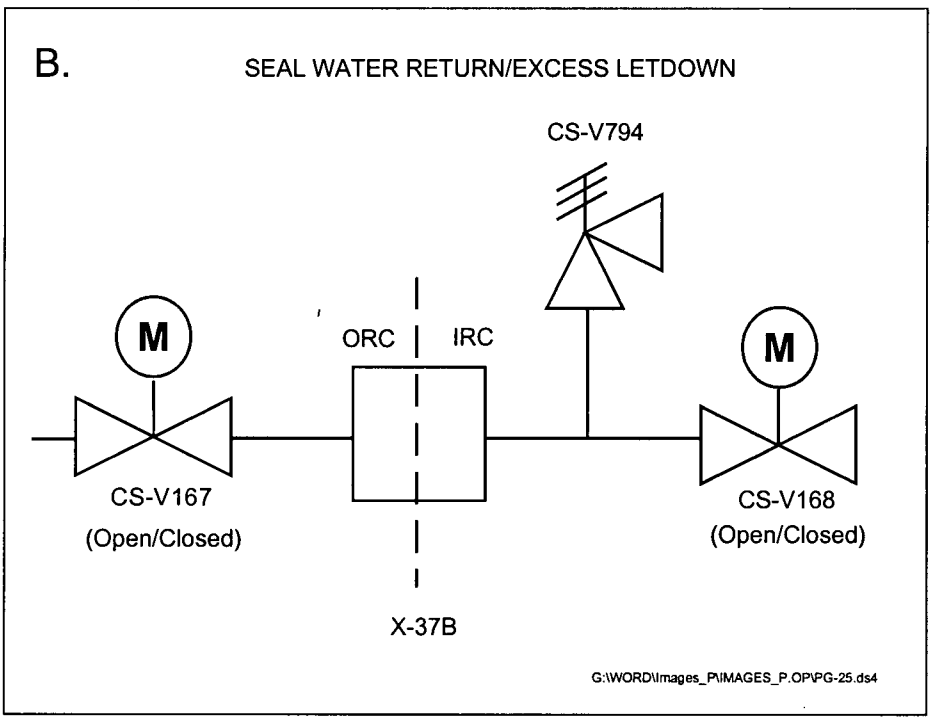

Figure 4: Containment Penetration Locations

(Sheet 26 of 41)

Penetrations: X-38A, X-38B, X-76A and X-76B

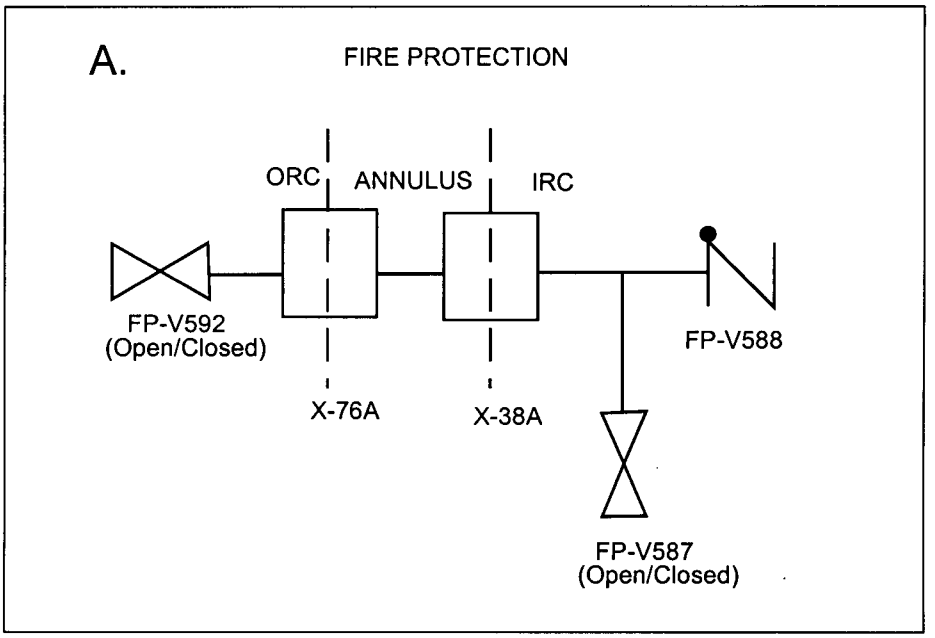

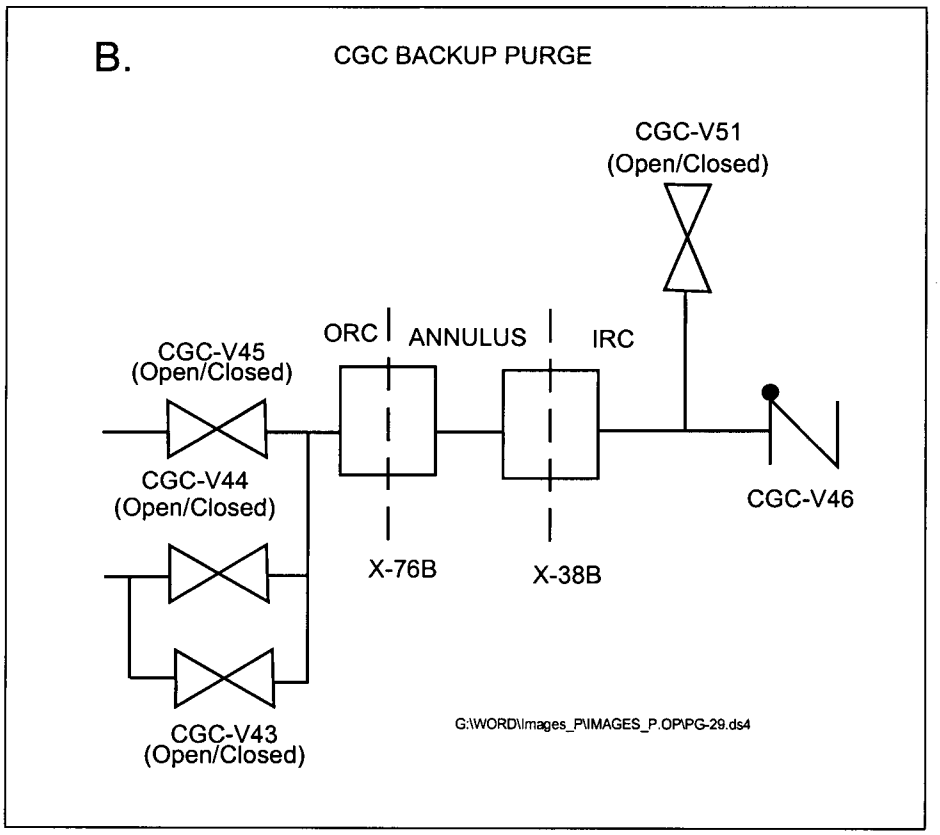

Figure 4: Containment Penetration Locations

(Sheet 27 of 41)

Penetration: X-39

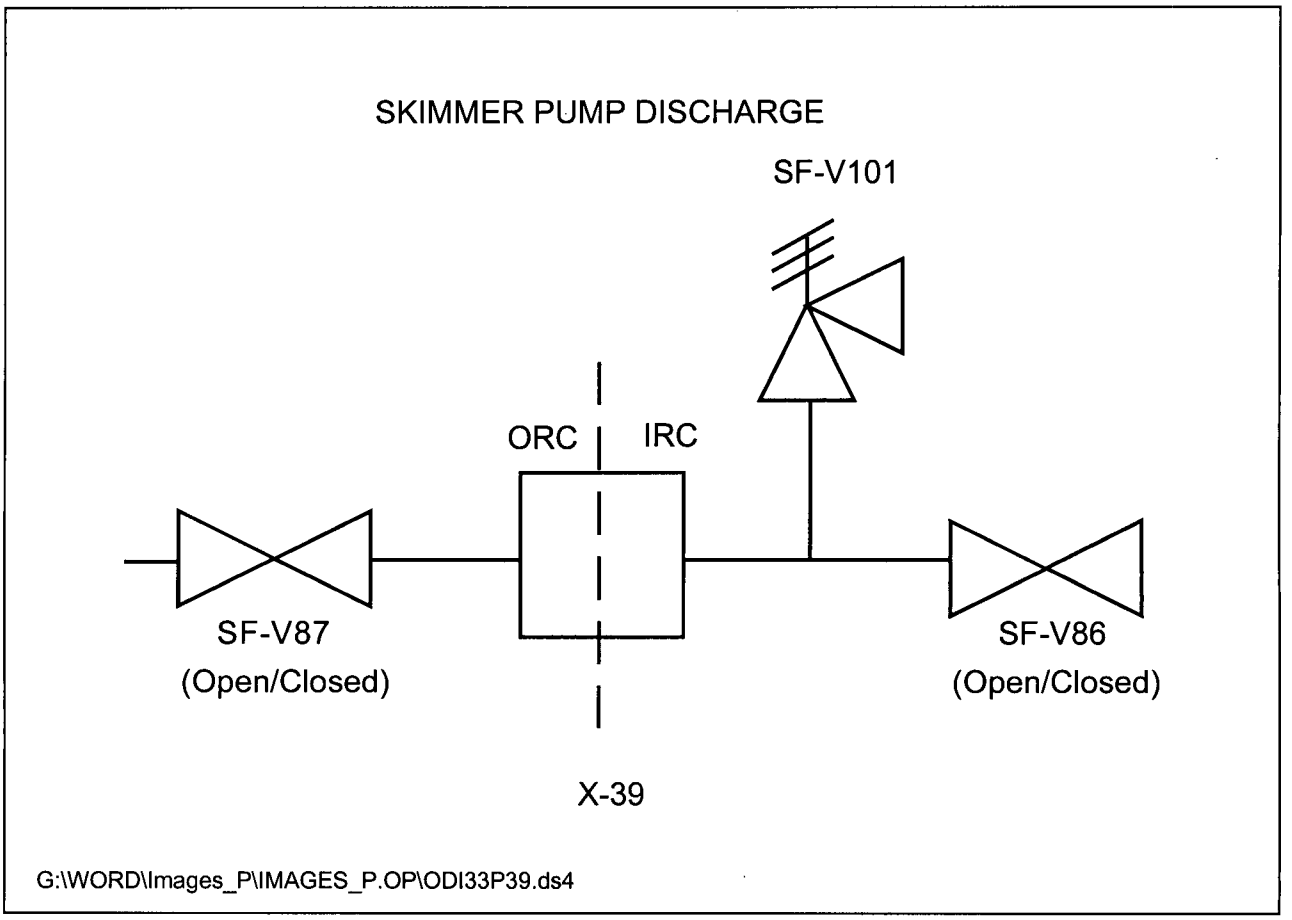

Figure 4: Containment Penetration Locations

(Sheet 28 of 41)

Penetrations: X-40A and X-40B

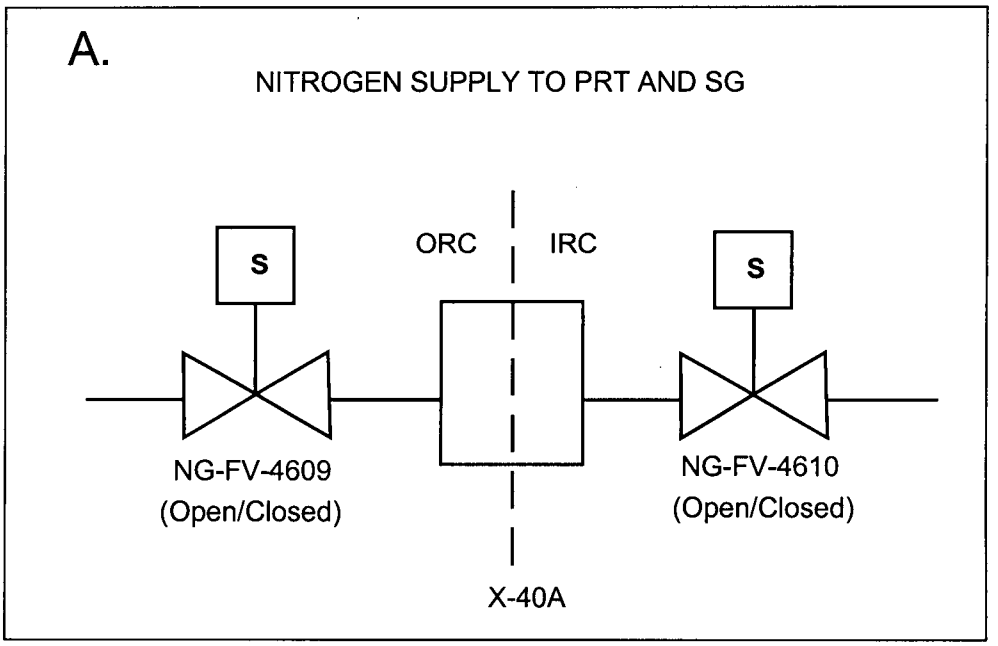

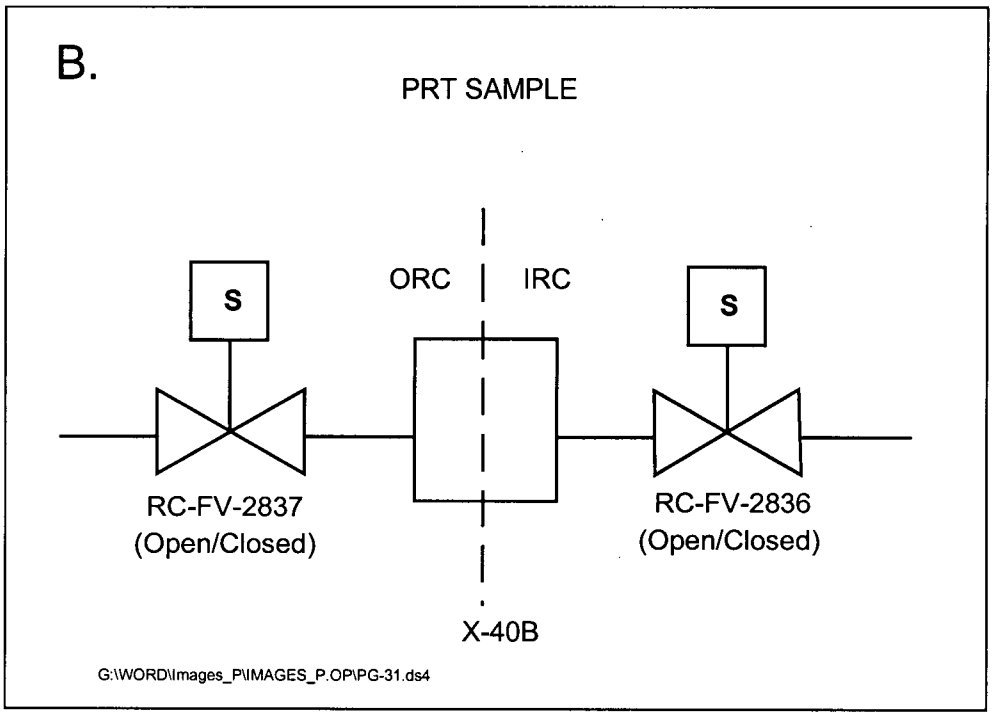

Figure 4: Containment Penetration Locations

(Sheet 29 of 41)

Penetrations: X-48A, X-48B, X-49A and X-49B

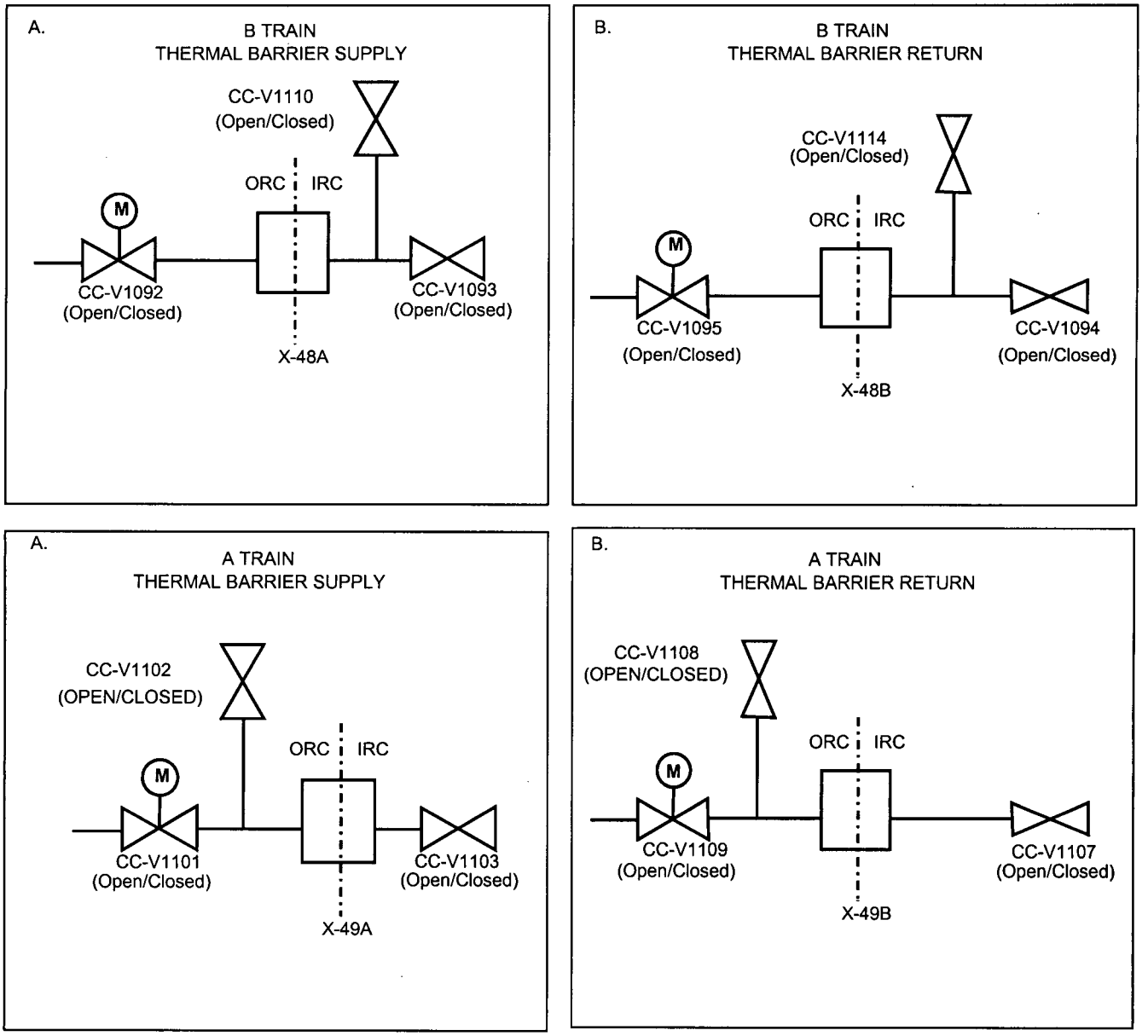

G:\WORD\Images_P\IMAGES_P.OP\Pg-32.ds4
4/30/2003

Figure 4: Containment Penetration Locations

(Sheet 30 of 41)

Penetrations: X-52A and X-52B

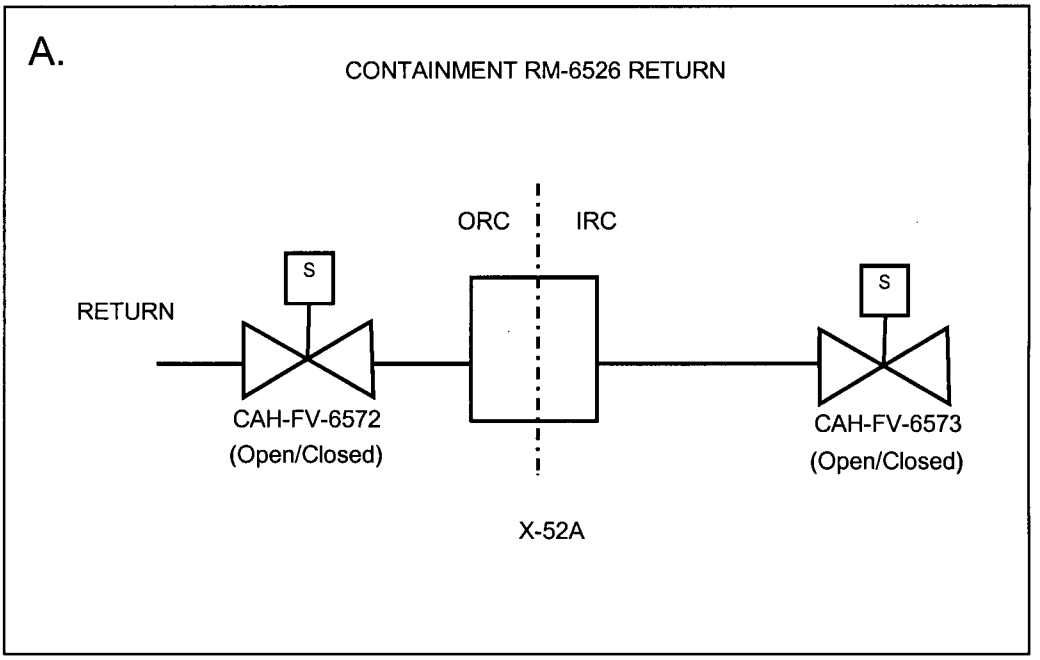

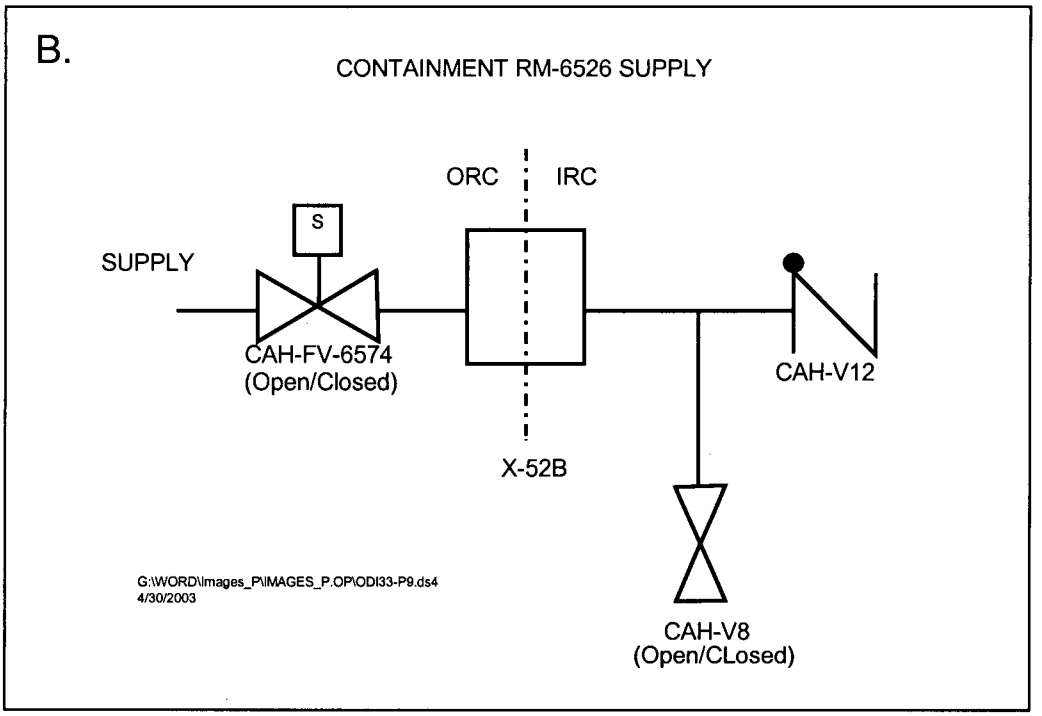

Figure 4: Containment Penetration Locations

(Sheet 31 of 41)

Penetration: E-58

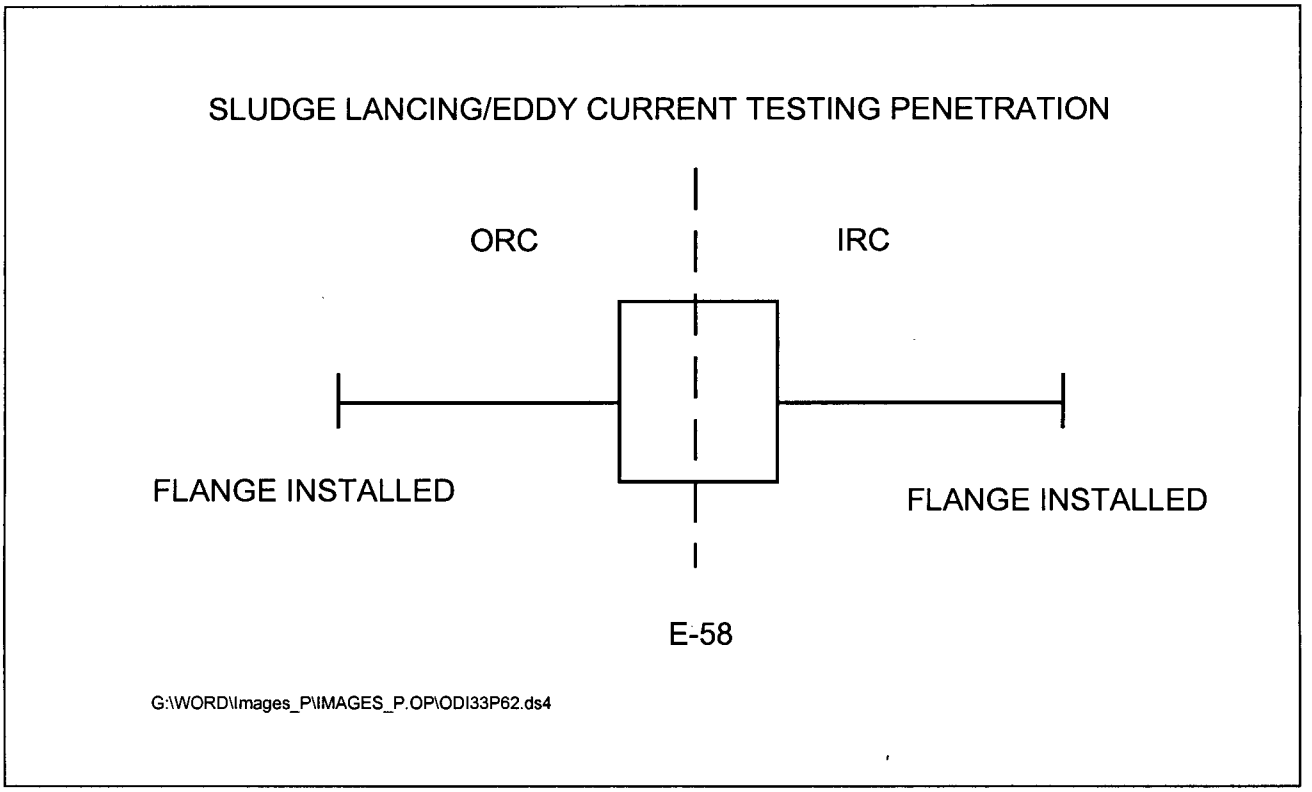

TECHNICAL REQUIREMENTS FIRE BARRIER

NOTIFY FIRE PROTECTION

Figure 4: Containment Penetration Locations

(Sheet 32 of 41)

Penetration: E-59

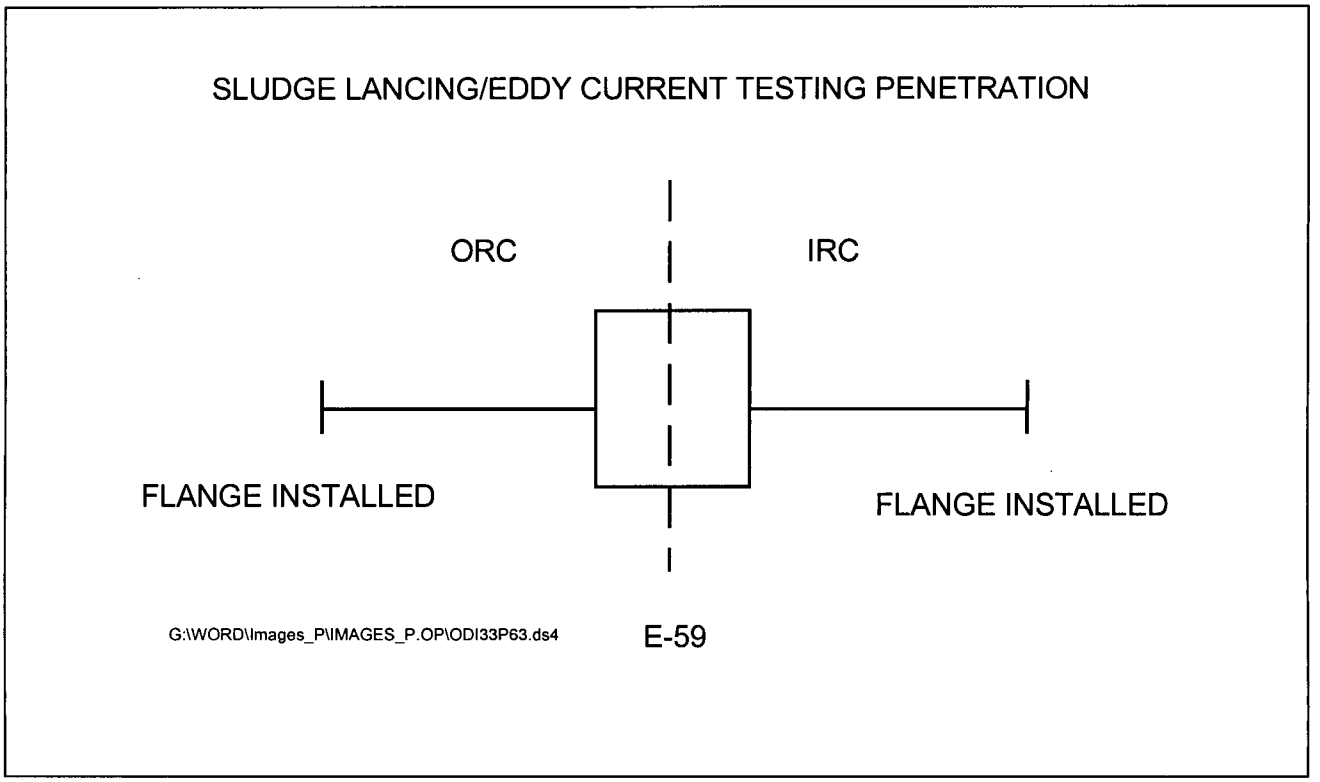

TECHNICAL REQUIREMENTS FIRE BARRIER

NOTIFY FIRE PROTECTION

Figure 4: Containment Penetration Locations

(Sheet 33 of 41)

Penetrations: X-60 and X-61

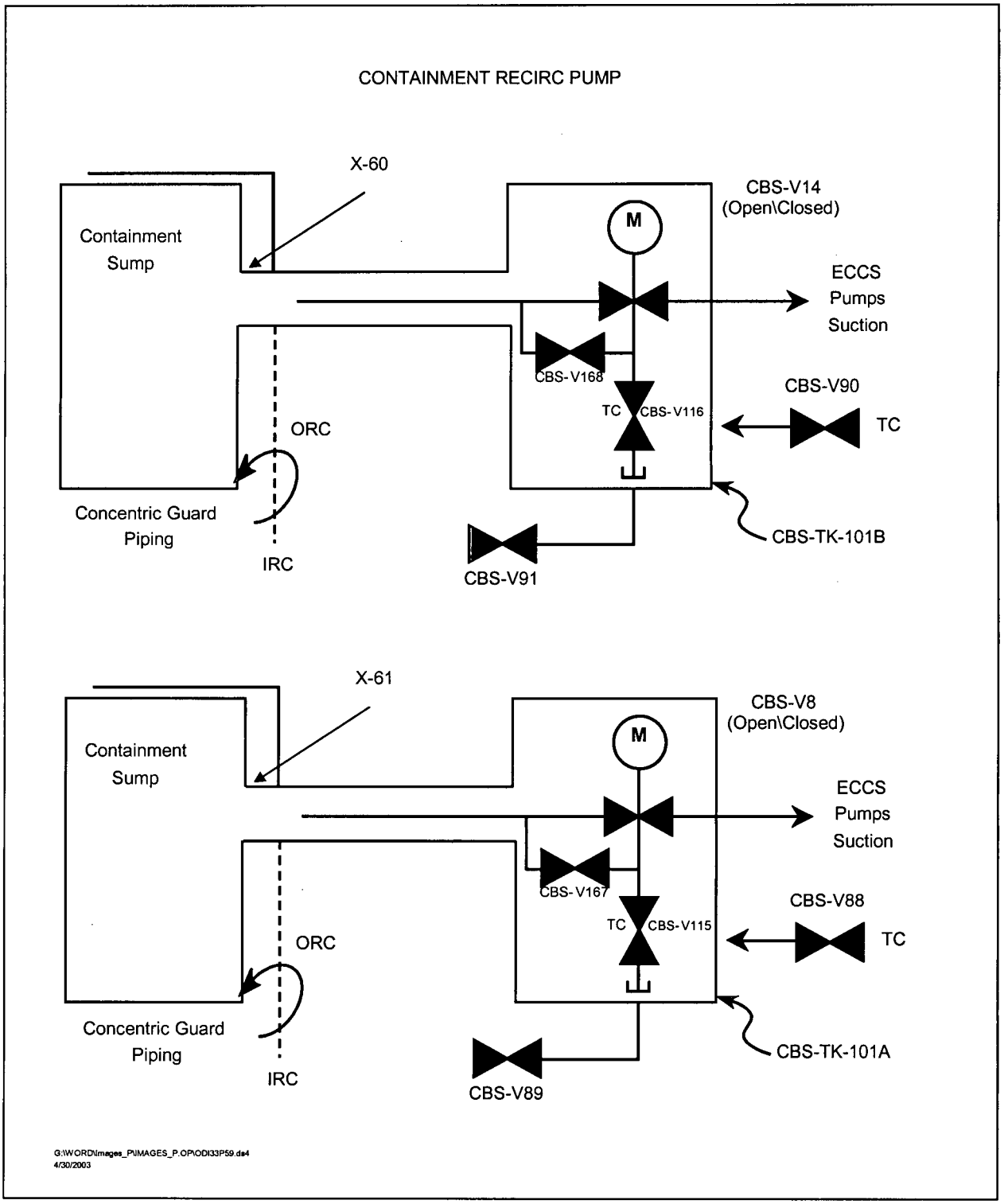

Figure 4: Containment Penetration Locations

(Sheet 34 of 41)

Penetrations: X-62

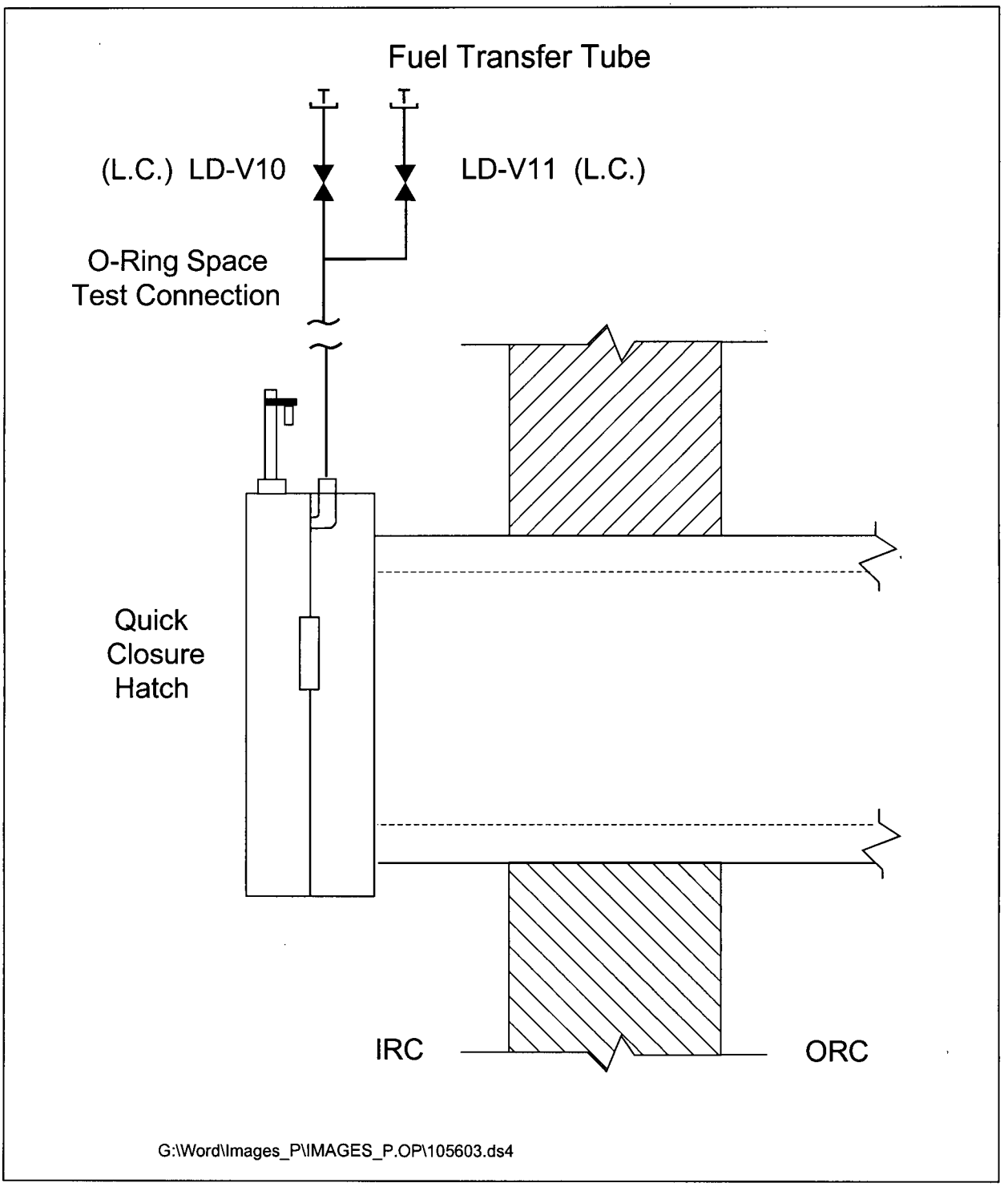

Figure 4: Containment Penetration Locations

(Sheet 35 of 41)

Penetrations: X-63, X-64, X-65 and X-66

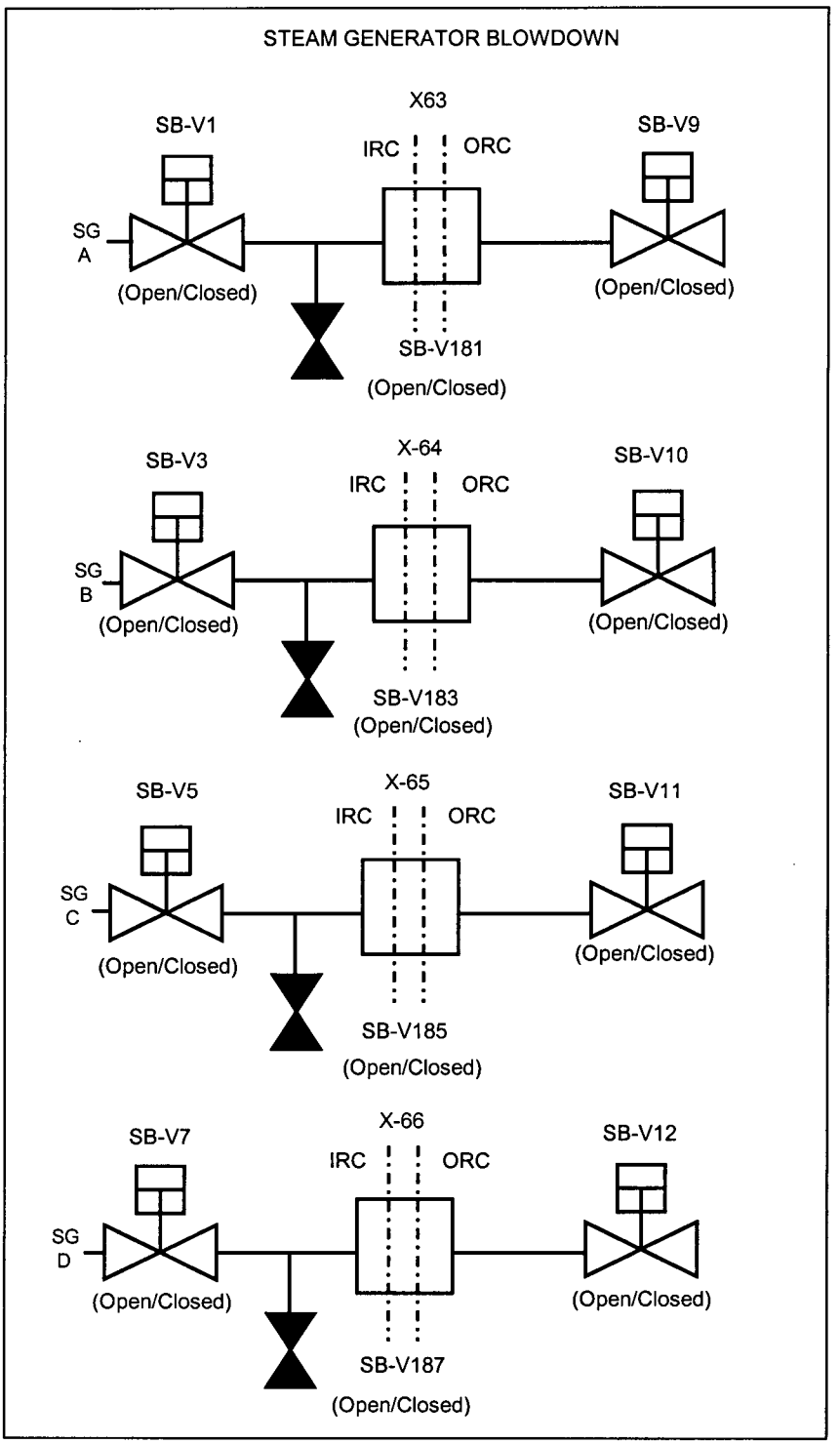

G:\WORD\Images_P\IMAGES_P.OP\ODI33P43.ds4
4/30/2003

Figure 4: Containment Penetration Locations

(Sheet 36 of 41)

Penetration: X-67

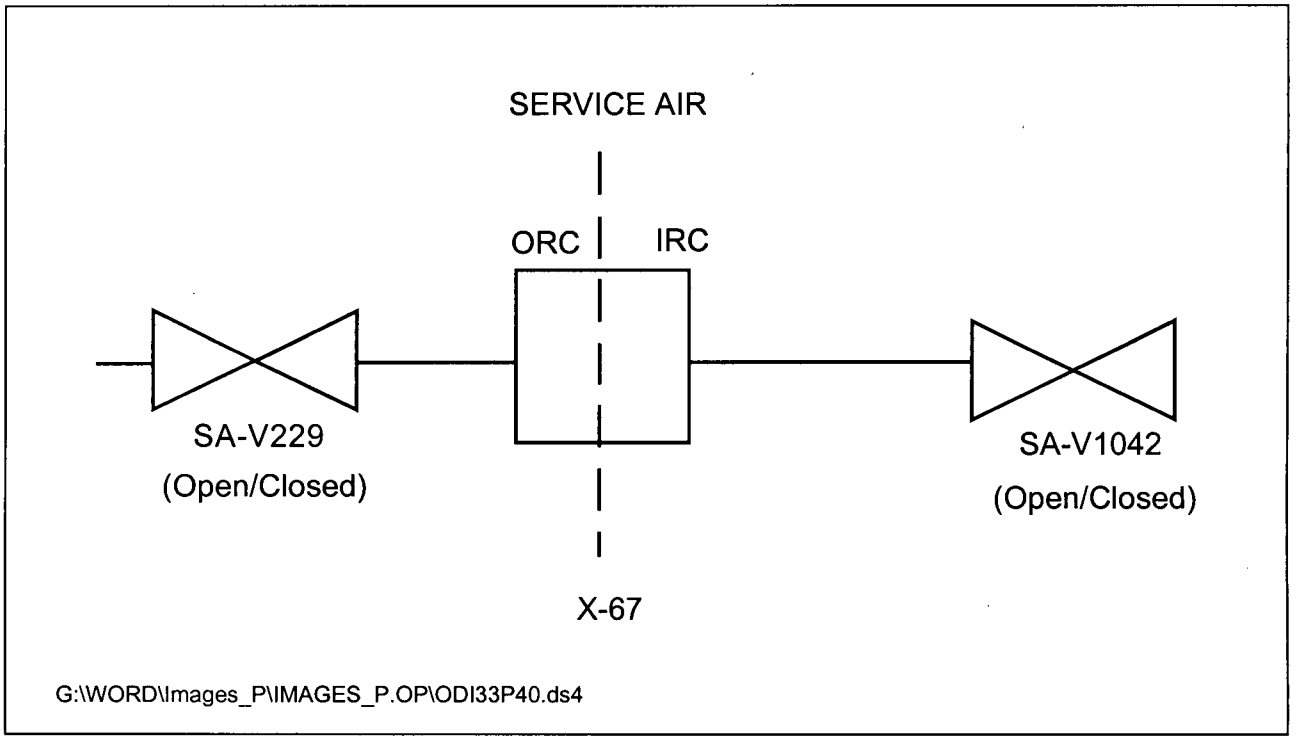

Figure 4: Containment Penetration Locations

(Sheet 37 of 41)

Penetration: X-68

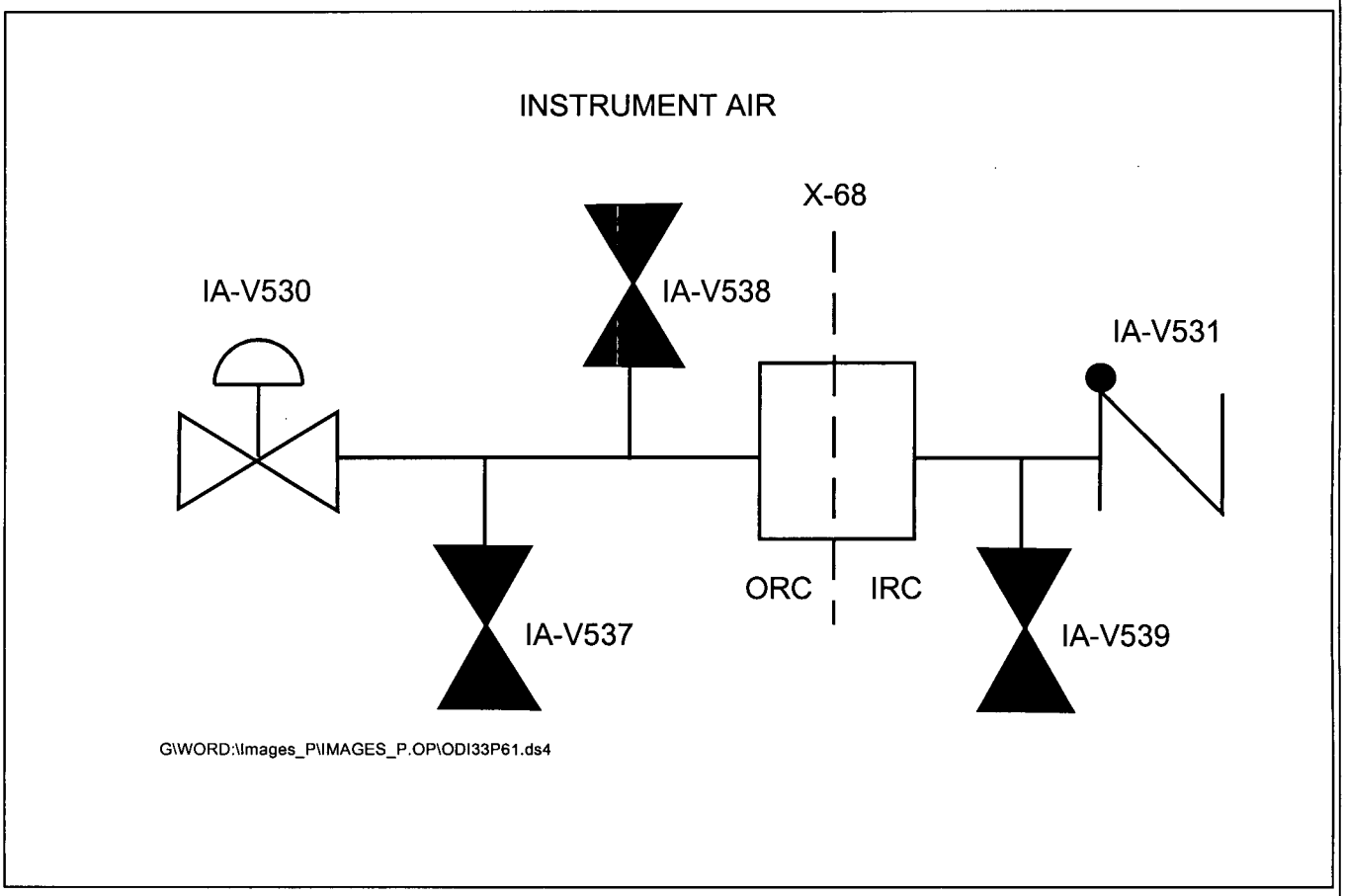

Figure 4: Containment Penetration Locations

(Sheet 38 of 41)

Penetrations: X-71A, B, C, D, X-72A, B, C, X-74A, B, C, D and X-75A, B, C

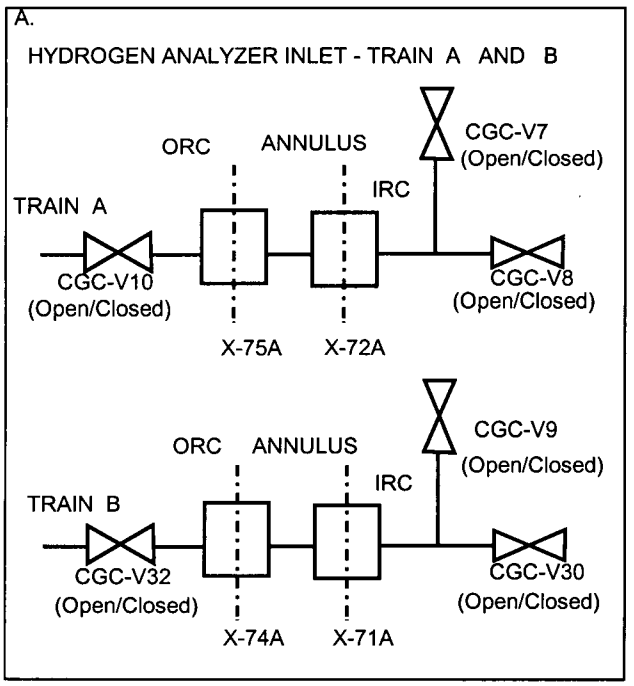

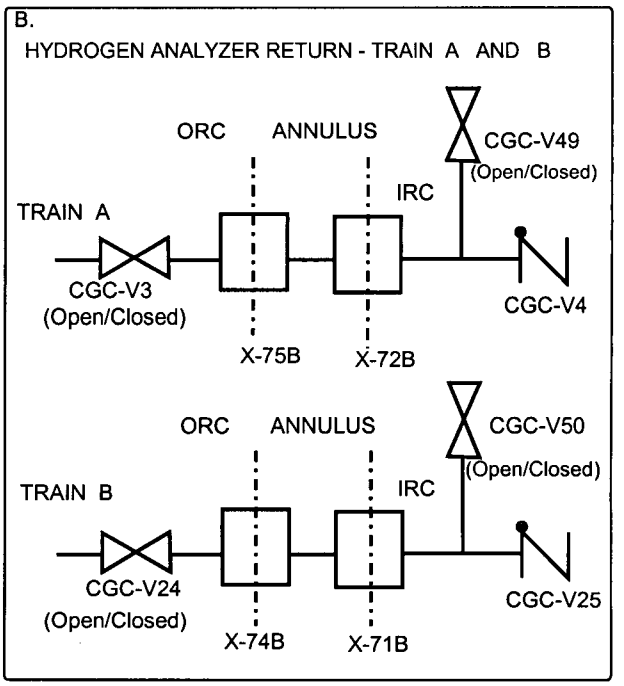

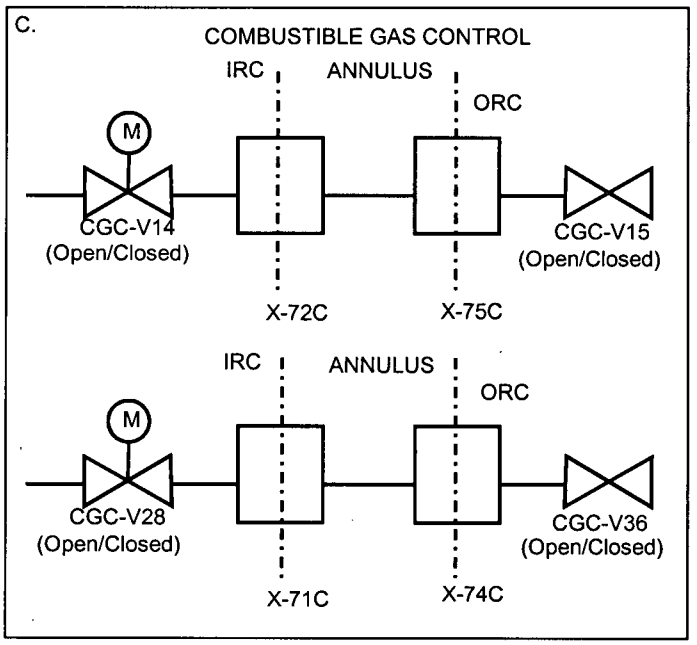

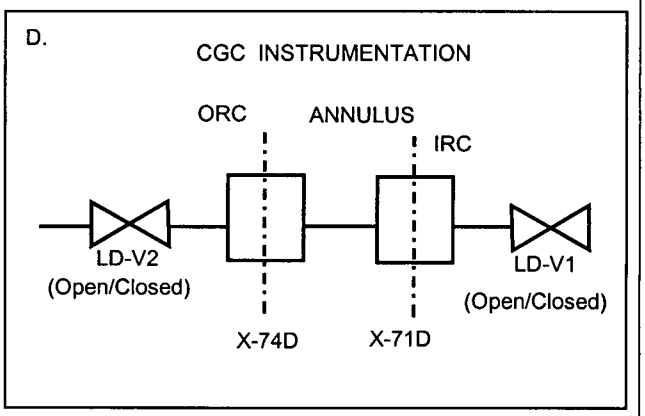

G:\WORD\Images_P\IMAGES_P.OP\PG-38.ds4
4/30/2003

Figure 4: Containment Penetration Locations

(Sheet 39 of 41)

Penetrations: X-HVAC-1 and X-HVAC-2

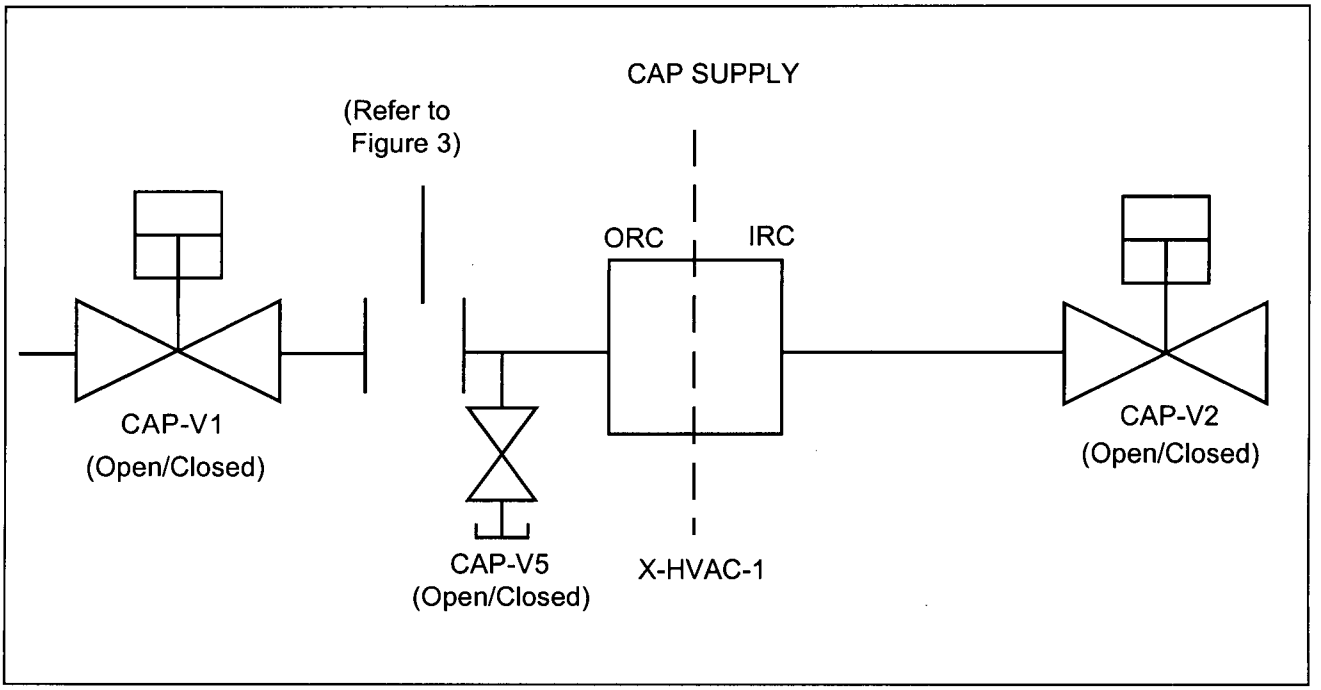

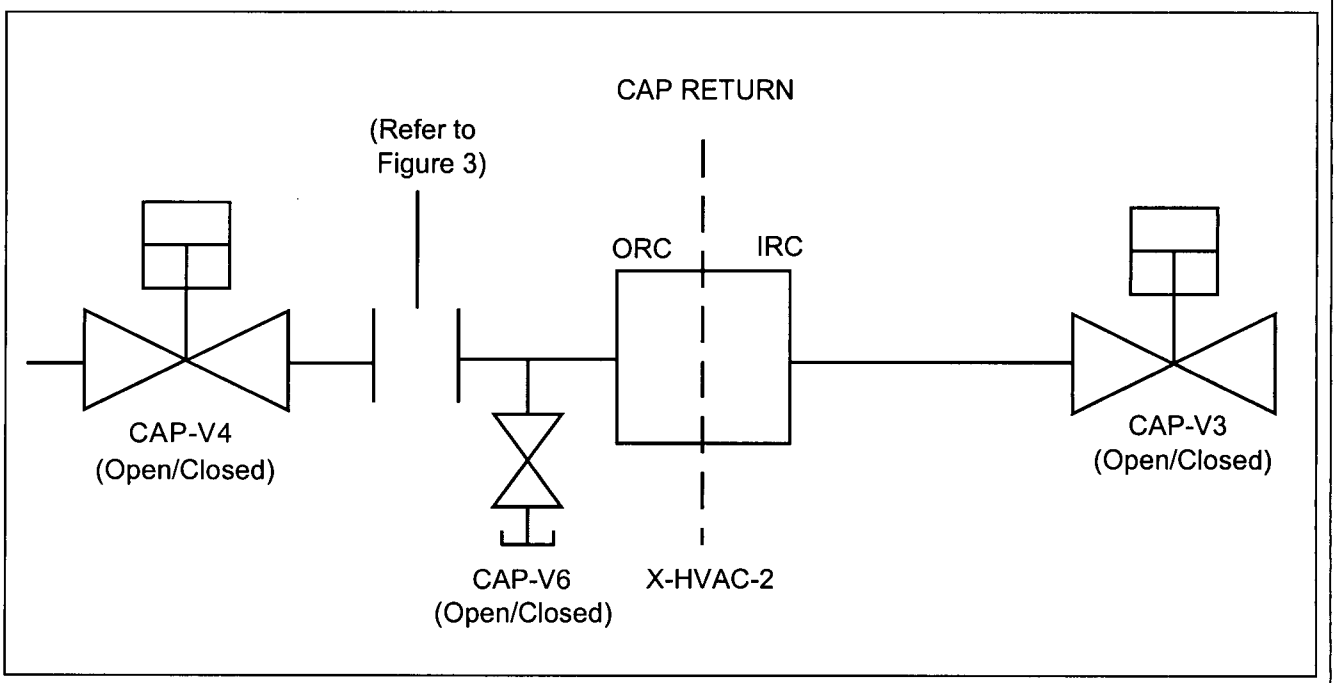

G:\WORD\Images P\IMAGES P.OP\PG-42.ds4

Figure 4: Containment Penetration Locations

(Sheet 40 of 41)

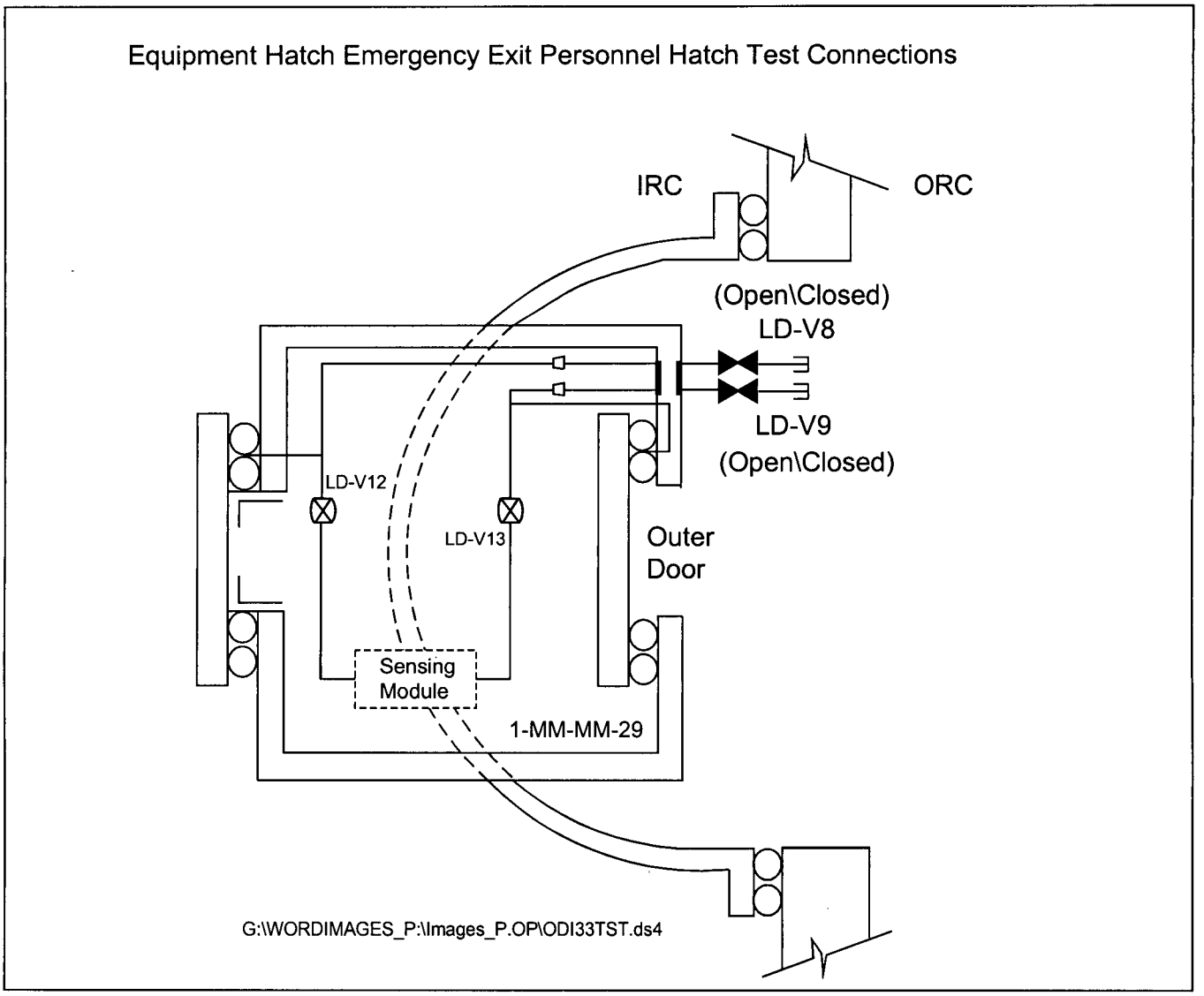

Figure 4: Containment Penetration Locations

(Sheet 41 of 41)

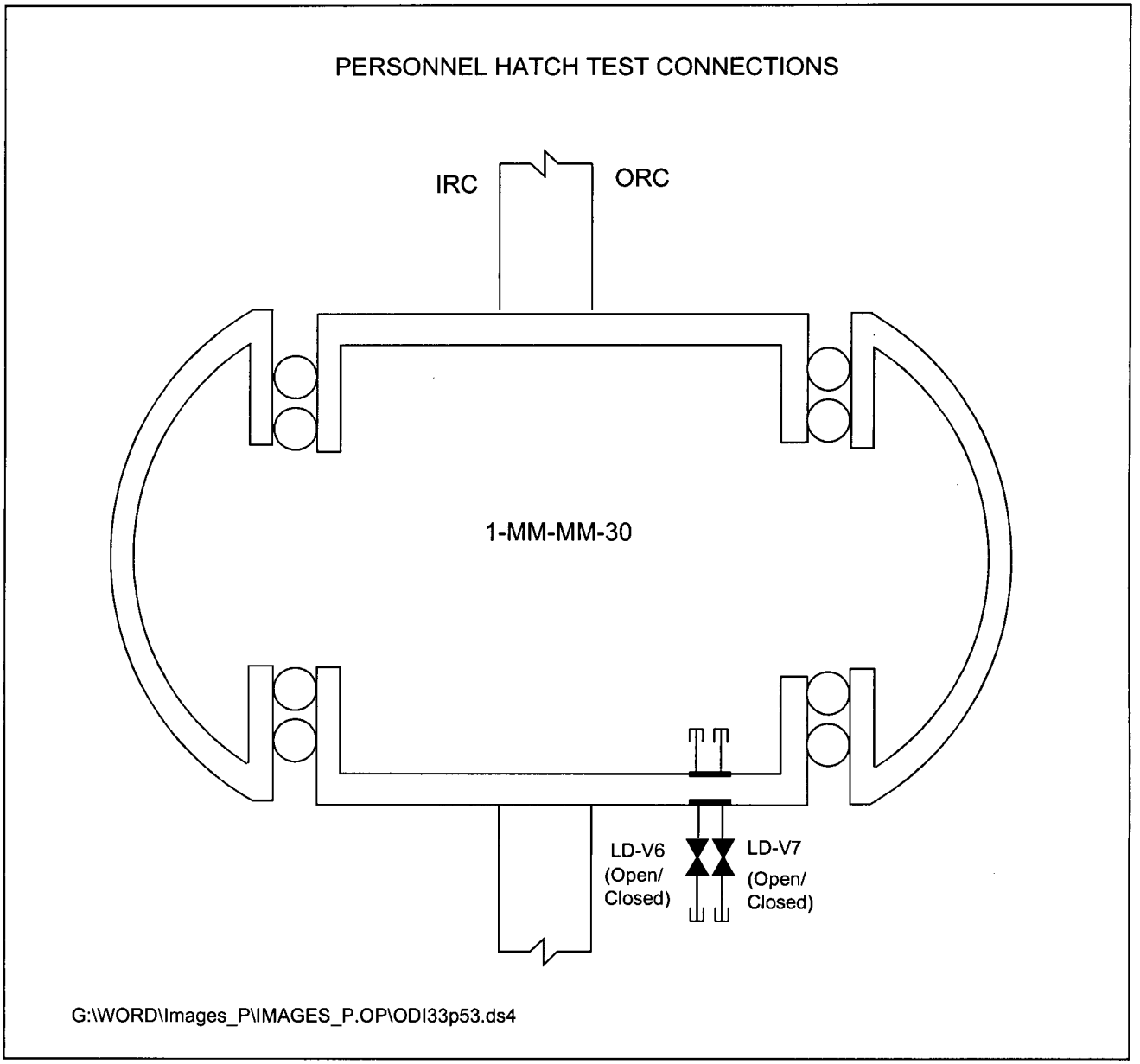

Figure 5: Containment Penetration Integrity Criteria

(Sheet 1 of 14)

PENETRATION NUMBER	PENETRATION CRITERIA
X-1 Figure 5, (Sheet 1 of 41)	**IRC** ☐ SG Secondary Handholes and Manways installed ☐ MS-V295 closed ☐ Flow Transmitters 512 and 513 installed or associated valves, MS-V3 and MS-V4 closed ☐ NG-V39 closed or Nitrogen on the Steam Generator ☐ LT 519, 518, 517, 501, 551, 4310 installed or associated valves RC-V155, 156, 157, 158, 159, 160, 161, 162 and 381 closed ☐ SB-V2 ,189 installed and closed **(Note)** **or** **ORC** ☐ Steam Generator Safety Valves MS-V6, 7, 8, 9, and 10 installed ☐ Pressure Transmitters 514, 515, 516, 3001, 3051 and 3173 installed or associated isolation valves MS-V11, 12, 13, 14, 98 and 180 closed ☐ ASDV installed and closed or MS-V5 Block Valve closed ☐ MS-V276, 127, 171, 393, 396, 398, and 397 closed ☐ Valves closed - MSD-V44, MS-V204 and 86 ☐ FW-V30, 76 closed **(Note)** **NOTE**: SB-V189 and FW-V76 are **not** required to be closed if SG A is in wet layup.
X-2 Figure 5, (Sheet 2 of 41)	**IRC** ☐ SG Secondary Handholes and Manways installed ☐ MS-V296 closed ☐ Flow Transmitters 523 and 522 installed or associated valves MS-V19 and 20 closed ☐ NG-V40 closed or Nitrogen on the Steam Generator ☐ LT 529, 528, 527, 502, 552, 4320 installed or associated valves RC-V163, 164, 165, 166, 167, 168, 169, 170 and 382 closed ☐ SB-V4,191 installed and closed **(Note)** **or** **ORC** ☐ Steam Generator Safety Valves MS-V22, 23, 24, 25, 26 installed ☐ Pressure Transmitters 3002, 3174, 524, 525, 3052 and 526 installed or associated isolation valves MS-V27, 28, 29, 30, 99 and 181 closed ☐ ASDV installed and closed or MS-V21 Block Valve closed ☐ MS-V277, 394, 411, 413, 128, 172, and 412 closed ☐ Valves closed - MSD-V45, MS-V88 and 205 ☐ FW-V39, 82 closed **(Note)** **NOTE**: SB-V191 and FW-V82 are **not** required to be closed if SG B is in wet layup.

Figure 5: Containment Penetration Integrity Criteria

(Sheet 2 of 14)

X-3 Figure 5, (Sheet 3 of 41)	**IRC** ☐ SG Secondary Handholes and Manways installed ☐ MS-V297 closed ☐ Flow Transmitters 532 and 533 installed or associated valves MS-V33 and 34 closed ☐ NG-V41 closed or Nitrogen on the Steam Generator ☐ LT 539, 538, 537, 503, 553, 4330 installed or associated valves RC-V171, 172, 173, 174, 175, 176, 177, 178 and 383 closed ☐ SB-V6,193 installed and closed **(Note)** **or** **ORC** ☐ Steam Generator Safety Valves MS-V36, 37, 38, 39, and 40 installed ☐ Pressure Transmitters 3003, 3178, 534, 535, 3053 and 536 installed or associated Isolation Valves MS-V41, 42, 43, 44, 102 and 182 closed ☐ ASDV installed and closed or MS-V35 Block Valve closed ☐ MS-V278 closed ☐ Valves closed - MSD-V-46, MS-V90, and 206 ☐ FW-V48, 88 closed **(Note)** **NOTE**: SB-V193 and FW-V88 are **not** required to be closed if SG C is in wet layup.
X-4 Figure 5, (Sheet 4 of 41)	**IRC** ☐ SG Secondary Handholes and Manways installed ☐ MS-V298 closed ☐ Flow Transmitters 542 and 543 installed or associated valves MS-V47 and 48 closed ☐ NG-V42 closed or Nitrogen on the Steam Generator ☐ LT 549, 548, 547, 504, 554, 4340 installed or associated valves RC-V179, 180, 181, 182, 183, 184, 185, 186 and 380 closed ☐ SB-V8,195 Installed and closed **(Note)** **or** **ORC** ☐ Steam Generator Safety Valves MS-V50, 51, 52, 53, and 54 installed ☐ Pressure Transmitters 3004, 3179, 544, 545, 3054 and 546 installed or Associated Isolation Valves MS-V55, 56, 57, 58, 97 and 183 closed ☐ ASDV Installed and closed or MS-V49 Block Valve closed ☐ MS-V279 closed ☐ Valves closed- MSD-V47, MS-V92, and 207 ☐ FW-V57, 94 closed **(Note)** **NOTE**: SB-V195 and FW-V94 are **not** required to be closed if SG D is in wet layup.

Figure 5: Containment Penetration Integrity Criteria

(Sheet 3 of 14)

X-5 Figure 5, (Sheet 1 of 41)	**IRC** ☐ SG Secondary Handholes and Manways installed ☐ MS-V295 closed ☐ Flow Transmitters 512 and 513 installed or associated valves, MS-V3 and MS-V4 closed ☐ NG-V39 closed or Nitrogen on the Steam Generator ☐ LT 519, 518, 517, 501, 551, 4310 installed or associated valves RC-V155, 156, 157, 158, 159, 160, 161, 162 and 381 closed ☐ SB-V2,189 installed and closed **(Note)** **or** **ORC** ☐ Steam Generator Safety Valves MS-V6, 7, 8, 9, and 10 installed ☐ Pressure Transmitters 514, 515, 516, 3001 and 3173 installed or associated isolation valves MS-V11, 12, 13, 14 and 180 closed ☐ ASDV installed and closed or MS-V5 Block Valve closed ☐ MS-V276, 127, 171, 393, 396, 398, and 397 closed ☐ Valves closed - MSD-V44, MS-V204 and 86 ☐ FW-V30, 76 closed **(Note)** **NOTE**: SB-V189 and FW-V76 are **not** required to be closed if SG A is in wet layup.
X-6 Figure 5, (Sheet 2 of 41)	**IRC** ☐ SG Secondary Handholes and Manways installed ☐ MS-V296 closed ☐ Flow Transmitters 523 and 522 installed or associated valves MS-V19 and 20 closed ☐ NG-V40 closed or Nitrogen on the Steam Generator ☐ LT 529, 528, 527, 502, 552, 4320 installed or associated valves RC-V163, 164, 165, 166, 167, 168, 169, 170 and 382 closed ☐ SB-V4,191 installed and closed **(Note)** **or** **ORC** ☐ Steam Generator Safety Valves MS-V22, 23, 24, 25, 26 installed ☐ Pressure Transmitters 3002, 3174, 524, 525, and 526 installed or associated isolation valves MS-V27, 28, 29, 30 and 181 closed ☐ ASDV installed and closed or MS-V21 Block Valve closed ☐ MS-V277, 394, 411, 413, 128, 172, and 412 closed ☐ Valves closed - MSD-V45, MS-V88 and 205 ☐ FW-V39, 82 closed **(Note)** **NOTE**: SB-V191 and FW-V82 are **not** required to be closed if SG B is in wet layup.

Figure 5: Containment Penetration Integrity Criteria

(Sheet 4 of 14)

X-7 Figure 5, (Sheet 3 of 41)	**IRC** ☐ SG Secondary Handholes and Manways installed ☐ MS-V297 closed ☐ Flow Transmitters 532 and 533 installed or associated valves MS-V33 and 34 closed ☐ NG-V41 closed or Nitrogen on the Steam Generator ☐ LT 539, 538, 537, 503, 553, 4330 installed or associated valves RC-V171, 172, 173, 174, 175, 176, 177, 178 and 383 closed ☐ SB-V6,193 installed and closed **(Note)** **or** **ORC** ☐ Steam Generator Safety Valves MS-V36, 37, 38, 39, and 40 installed ☐ Pressure Transmitters 3003, 3178, 534, 535, and 536 installed or associated Isolation Valves MS-V41, 42, 43, 44, and 182 closed ☐ ASDV installed and closed or MS-V35 Block Valve closed ☐ MS-V278 closed ☐ Valves closed - MSD-V-46, MS-V90, and 206 ☐ FW-V48, 88 closed **(Note)** **NOTE**: SB-V193 and FW-V88 are **not** required to be closed if SG C is in wet layup.
X-8 Figure 5, (Sheet 4 of 41)	**IRC** ☐ SG Secondary Handholes and Manways installed ☐ MS-V298 closed ☐ Flow Transmitters 542 and 543 installed or associated valves MS-V47 and 48 closed ☐ NG-V42 closed or Nitrogen on the Steam Generator ☐ LT 549, 548, 547, 504, 554, 4340 installed or associated valves RC-V179, 180, 181, 182, 183, 184, 185, 186 and 380 closed ☐ SB-V8,195 Installed and closed **(Note)** **or** **ORC** ☐ Steam Generator Safety Valves MS-V50, 51, 52, 53, and 54 installed ☐ Pressure Transmitters 3004, 3179, 544, 545 and 546 installed or Associated Isolation Valves MS-V55, 56, 57, 58, and 183 closed ☐ ASDV Installed and closed or MS-V49 Block Valve closed ☐ MS-V279 closed ☐ Valves closed- MSD-V47, MS-V92, and 207 ☐ FW-V57, 94 closed **(Note)** **NOTE**: SB-V195 and FW-V94 are **not** required to be closed if SG D is in wet layup.
X-9 Figure 5, (Sheet 5 of 41)	☐ IRC Valves Closed, RC-V-23 and (relief valve RC-V-24 installed) **or** ☐ System in Service

Figure 5: Containment Penetration Integrity Criteria

(Sheet 5 of 14)

X-10 Figure 5, (Sheet 5 of 41)	☐ IRC Valves Closed, RC-V-88 and (relief valve RC-V-89 installed) **or** ☐ System in Service
X-11 Figure 5, (Sheet 6 of 41)	☐ ORC Valves Closed, RH-V-14 **or** ☐ System in Service
X-12 Figure 5, (Sheet 6 of 41)	☐ ORC Valves Closed, RH-V-26 **or** ☐ System in Service
X-13 Figure 5, (Sheet 6 of 41)	☐ ORC Valves Closed, RH-V-70 and RH-V-32 **or** ☐ System in Service
X-14 Figure 5, (Sheet 7 of 41)	☐ ORC Valves Closed, CBS-V-11 **or** ☐ IRC Valves Closed, CBS-V-22, (check valve CBS V-12 installed)
X-15 Figure 5, (Sheet 7 of 41)	☐ ORC Valves Closed, CBS-V-17 **or** ☐ IRC Valves Closed, CBS-V-20 and (check valve CBS-V-18 installed)
X-16 Figure 5, (Sheet 8 of 41)	☐ COP-V10 Closed and IRC **or** ORC valves closed or capable of being closed by an operable automatic closure device. (ORC - COP-V-4, COP-V-10, IRC-COP-V-3)
X-17 Figure 5, (Sheet 9 of 41)	☐ ORC Valves Closed, VG-FV-1661 **or** ☐ IRC Valves Closed, VG-FV-1712 **or** ☐ System in Service
X-18 Figure 5, (Sheet 10 of 41)	☐ COP-V9 Closed and IRC **or** ORC valves closed or capable of being closed by an operable automatic closure device. (ORC - COP-V-1 and COP-V-9, IRC - COP-V-2)
X-19 Figure 5, (Sheet 11 of 41)	☐ ORC Valves Closed, SS-FV-2857 **or** ☐ IRC Valves Closed, SS-V-272, (check valve SS-V-273 installed) **or** ☐ System in Service

Figure 5: Containment Penetration Integrity Criteria

(Sheet 6 of 14)

X-20 Figure 5, (Sheet 12 of 41)	☐ ORC Valves Closed, CC-V-168 **or** ☐ IRC Valves Closed, CC-V-57, (relief valve CC-V-845 installed) **or** ☐ System in Service
X-21 Figure 5, (Sheet 13 of 41)	☐ ORC Valves Closed, CC-V-122 **or** ☐ IRC Valves Closed, CC-V-121, (relief valve CC-V-410 installed) **or** ☐ System in Service
X-22 Figure 5, (Sheet 13 of 41)	☐ ORC Valves Closed, CC-V-257 **or** ☐ IRC Valves Closed, CC-V-256 and (relief valve CC-V-474 installed) **or** ☐ System in Service
X-23 Figure 5, (Sheet 12 of 41)	☐ ORC Valves Closed, CC-V-175 **or** ☐ IRC Valves Closed, CC-V-176, (relief valve CC-V-840 installed) **or** ☐ System in Service
X-24 Figure 5, (Sheet 14 of 41)	☐ ORC Valves Closed, SI-V-139, SI-V-138 and (check valve SI-V-297 pipe tight) **or** ☐ IRC Valves Closed, SI-V-240, SI-V-158 and (check valve SI-V-140 installed) **or** ☐ System in Service
X-25 Figure 5, (Sheet 15 of 41)	☐ ORC Valves Closed, SI-V-102, SI-V-237 **or** ☐ System in Service
X-26 Figure 5, (Sheet 15 of 41)	☐ ORC Valves Closed, SI-V-272, SI-V-231, and SI-V-77 **or** ☐ System in Service
X-27 Figure 5, (Sheet 15 of 41)	☐ ORC Valves Closed, SI-V-114, SI-V-234 **or** ☐ System in Service

Figure 5: Containment Penetration Integrity Criteria

(Sheet 7 of 14)

X-28 Figure 5, (Sheet 16 of 41)	☐ ORC Valves Closed, CS-V-166 **or** ☐ IRC Valves Closed, CS-V-506 and (check valve CS-V-4 installed) **or** ☐ System in Service
X-29 Figure 5, (Sheet 17 of 41)	☐ ORC Valves Closed, CS-V-162 **or** ☐ IRC Valves Closed, CS-V-510 and (check valve CS-V-20 installed) **or** ☐ System in Service
X-30 Figure 5, (Sheet 18 of 41)	☐ ORC Valves Closed, CS-V-158 **or** ☐ IRC Valves Closed, CS-V-512 and (check valve CS-V-36 installed) **or** ☐ System in Service
X-31 Figure 5, (Sheet 19 of 41)	☐ ORC Valves Closed, CS-V-154 **or** ☐ IRC Valves Closed, CS-V-515 and (check valve CS-V-52 installed) **or** ☐ System in Service
X-32 Figure 5, (Sheet 20 of 41)	☐ ORC Valves Closed, WLD-V-82 **or** ☐ IRC Valves Closed, WLD-V-81 and (relief valve WLD-V213 installed) **or** ☐ System in Service
X-33 Figure 5, (Sheet 21 of 41)	☐ ORC Valves Closed, CS-V-143 closed or CS-V-142 and CS-V-553 closed **or** ☐ IRC Valves Closed, CS-V-555 and (check valve CS-V-144 installed) **or** ☐ System in Service
X-34 Figure 5, (Sheet 22 of 41)	☐ ORC Valves Closed, WLD-FV-8330 **or** ☐ IRC Valves Closed, WLD-FV-8331 and (relief valve WLD-V-209 installed) **or** ☐ System in Service

Figure 5: Containment Penetration Integrity Criteria

(Sheet 8 of 14)

X-35A Figure 5, (Sheet 23 of 41)	☐ ORC - SI-V157,62 closed **and** either PI-929 and 2491 installed or SI-V61 closed **or** ☐ IRC Valves Closed, SI-V-70 and (relief valve SI-V-247 installed) **or** ☐ System in Service
X-35B Figure 5, (Sheet 23 of 41)	☐ ORC Valves Closed, RC-FV-2840 **or** ☐ IRC Valves Closed, RC-FV-2830, RC-FV-2831, (relief valve RC-V-312 installed) **or** ☐ System in Service
X-35C Figure 5, (Sheet 23 of 41)	☐ ORC Valves Closed, RC-FV-2894, RC-FV-2874 **or** ☐ IRC Valves Closed, RC-FV-2832, (relief valve RC-V-314 installed) **or** ☐ System in Service
X-35D Figure 5, (Sheet 23 of 41)	☐ ORC Valves Closed, RC-FV-2876, RC-FV-2896 **or** ☐ IRC Valves Closed, RC-V-379, RC-V-378, RC-FV-2833 and (relief valve RC-V-337 installed) **or** ☐ System in Service
X-36A Figure 5, (Sheet 24 of 41)	☐ ORC Valves Closed, DM-V-4 **or** ☐ IRC Valves Closed, DM-V-5 and (relief valve DM-V-18 installed) **or** ☐ System in Service
X-36B Figure 5, (Sheet 24 of 41)	☐ ORC Valves Closed, NG-V-13 **or** ☐ IRC Valves Closed, NG-V-14 **or** ☐ System in Service

Figure 5: Containment Penetration Integrity Criteria

(Sheet 9 of 14)

X-36C Figure 5, (Sheet 24 of 41)	☐ ORC Valves Closed, RMW-V-30 **or** ☐ IRC Valves Closed, RMW-V-137 and (check valve RMW-V-29 installed) 0**or** ☐ System in Service
X-37A Figure 5, (Sheet 25 of 41)	☐ ORC Valves Closed, CS-V-150 **or** ☐ IRC Valves Closed, CS-V-884, CS-V-885, CS-V-815 and CS-V149 **or** ☐ System in Service
X-37B Figure 5, (Sheet 25 of 41)	☐ ORC Valves Closed, CS-V-167 **or** ☐ IRC Valves Closed. CS-V-168 and (relief valve CS-V-794 installed) **or** ☐ System in Service
X-38A Figure 5, (Sheet 26 of 41)	☐ ORC Valves Closed, FP-V-592 **or** ☐ IRC Valves Closed, FP-V-587 and (check valve FP-V-588 installed) **or** ☐ System in Service
X-38B Figure 5, (Sheet 26 of 41)	☐ ORC Valves Closed, CGC-V-45, CGC-V-44, CGC-V-43 **or** ☐ IRC Valves Closed, CGC-V-51 and (check valve CGC-V-46 installed)
X-39 Figure 5, (Sheet 27 of 41)	☐ ORC Valves Closed, SF-V-87 **or** ☐ IRC Valves Closed, SF-V-86 and (relief valve SF-V-101 installed) **or** ☐ System in Service
X-40A Figure 5, (Sheet 28 of 41)	☐ ORC Valves Closed, NG-FV-4609 **or** ☐ IRC Valves Closed, NG-FV-4610 **or** ☐ System in Service

Figure 5: Containment Penetration Integrity Criteria

(Sheet 10 of 14)

X-40B Figure 5, (Sheet 28 of 41)	☐ ORC Valves Closed, RC-FV-2837 **or** ☐ IRC Valves Closed, RC-FV-2836 **or** ☐ System in Service
X-48A Figure 5, (Sheet 29 of 41)	☐ ORC Valves Closed, CC-V-1092 **or** ☐ IRC Valves Closed, CC-V-1110, CC-V-1093 **or** ☐ System in Service
X-48B Figure 5, (Sheet 29 of 41)	☐ ORC Valves Closed, CC-V-1095 **or** ☐ IRC Valves Closed, CC-V-1114, CC-V-1094 **or** ☐ System in Service
X-49A Figure 5, (Sheet 29 of 41)	☐ ORC Valves Closed, CC-V-1101, CC-V-1102 **or** ☐ IRC Valves Closed, CC-V-1103 **or** ☐ System in Service
X-49B Figure 5, (Sheet 29 of 41)	☐ ORC Valves Closed, CC-V-1108, CC-V-1109 **or** ☐ IRC Valves Closed, CC-V-1107 **or** ☐ System in Service
X-52A Figure 5, (Sheet 30 of 41)	☐ ORC Valves Closed, CAH-FV-6572 **or** ☐ IRC Valves Closed, CAH-FV-6573 **or** ☐ System in Service
X-52B Figure 5, (Sheet 30 of 41)	☐ ORC Valves Closed, CAH-FV-6574 **or** ☐ IRC Valves Closed, CAH-V-8 and (check valve CAH-V-12 installed) **or** ☐ System in Service

Figure 5: Containment Penetration Integrity Criteria

(Sheet 11 of 14)

E-58 Figure 5, (Sheet 31 of 41)	IRC or ORC Flange Installed
E-59 Figure 5, (Sheet 32 of 41)	IRC or ORC Flange Installed
X-60 Figure 5, (Sheet 33 of 41)	CBS-V14 closed, CBS-V116 closed
X-61 Figure 5, (Sheet 33 of 41)	CBS-V8 closed, CBS-V115 closed
X-62 Figure 5, (Sheet 34 of 41)	Flange installed, LD-V-10 closed, LD-V-11 closed
X-63 Figure 5, (Sheet 35 of 41)	☐ ORC Valves Closed, SB-V-9 **or** ☐ IRC Valves Closed, SB-V-181, SB-V-1 **or** ☐ System in Service
X-64 Figure 5, (Sheet 35 of 41)	☐ ORC Valves Closed, SB-V-10 **or** ☐ IRC Valves Closed, SB-V-183, SB-V-3 **or** ☐ System in Service
X-65 Figure 5, (Sheet 35 of 41)	☐ ORC Valves Closed, SB-V-11 **or** ☐ IRC Valves Closed, SB-V-185, SB-V-5 **or** ☐ System in Service
X-66 Figure 5, (Sheet 35 of 41)	☐ ORC Valves Closed, SB-V-12 **or** ☐ IRC Valves Closed, SB-V-187, SB-V-7 **or** ☐ System in Service

Figure 5: Containment Penetration Integrity Criteria

(Sheet 12 of 14)

X-67 Figure 5, (Sheet 36 of 41)	☐ ORC Valves Closed, SA-V-229 **or** ☐ IRC Valves Closed, SA-V-1042
X-68 Figure 5, (Sheet 37 of 41)	☐ ORC Valves Closed, IA-V-530, IA-V-538, and IA-V-537 **or** ☐ IRC Valves Closed, IA-V-539 and (check valve IA-V-531 installed) **or** ☐ System in Service
X-71A Figure 5, (Sheet 38 of 41)	☐ ORC Valves Closed, CGC-V-32 **or** ☐ IRC Valves Closed, CGC-V-9 and CGC-V-30 **or** ☐ System in Service
X-71B Figure 5, (Sheet 38 of 41)	☐ ORC Valves Closed, CGC-V-24 **or** ☐ IRC Valves Closed, CGC-V-50 and (check valve CGC-V-25 installed) **or** ☐ System in Service
X-71C Figure 5, (Sheet 38 of 41)	☐ ORC Valves Closed, CGC-V-36 **or** ☐ IRC Valves Closed, CGC-V-28
X-71D Figure 5, (Sheet 38 of 41)	☐ ORC Valves Closed, LD-V-2 **or** ☐ IRC Valves Closed, LD-V-1
X-72A Figure 5, (Sheet 38 of 41)	☐ ORC Valves Closed, CGC-V-10 **or** ☐ IRC Valves Closed, CGC-V-7 and CGC-V-8 **or** ☐ System in Service
X-72B Figure 5, (Sheet 38 of 41)	☐ ORC Valves Closed, CGC-V-3 **or** ☐ IRC Valves Closed, CGC-V-49 and (check valve CGC-V-4 installed) **or** ☐ System in Service

Figure 5: Containment Penetration Integrity Criteria

(Sheet 13 of 14)

X-72C Figure 5, (Sheet 38 of 41)	☐ ORC Valves Closed, CGC-V-15 **or** ☐ IRC Valves Closed, CGC-V-14
X-74A Figure 5, (Sheet 38 of 41)	☐ ORC Valves Closed, CGC-V-32 **or** ☐ IRC Valves Closed, CGC-V-9 and CGC-V-30 **or** ☐ System in Service
X-74B Figure 5, (Sheet 38 of 41)	☐ ORC Valves Closed, CGC-V-24 **or** ☐ IRC Valves Closed, CGC-V-50 and (check valve CGC-V-25 installed) **or** ☐ System in Service
X-74C Figure 5, (Sheet 38 of 41)	☐ ORC Valves Closed, CGC-V-36 **or** ☐ IRC Valves Closed, CGC-V-28
X-74D Figure 5, (Sheet 38 of 41)	☐ ORC Valves Closed, LD-V-2 **or** ☐ IRC Valves Closed. LD-V-1
X-75A Figure 5, (Sheet 38 of 41)	☐ ORC Valves Closed, CGC-V-10 **or** ☐ IRC Valves Closed, CGC-V-7 and CGC-V-8 **or** ☐ System in Service
X-75B Figure 5, (Sheet 38 of 41)	☐ ORC Valves Closed, CGC-V-3 **or** ☐ IRC Valves Closed, CGC-V-49 and (check valve CGC-V4 installed) **or** ☐ System in Service

Figure 5: Containment Penetration Integrity Criteria

(Sheet 14 of 14)

X-75C Figure 5, (Sheet 38 of 41)	☐ ORC Valves Closed, CGC-V-15 **or** ☐IRC Valves Closed, CGC-V-14
X-76A Figure 5, (Sheet 26 of 41)	☐ ORC Valves Closed, FP-V-592 **or** ☐ IRC Valves Closed, FP-V-587 and (check valve FP-V-588 installed) **or** ☐System in Service
X-76B Figure 5, (Sheet 26 of 41)	☐ ORC Valves Closed, CGC-V-45, CGC-V-44, CGC-V-43 **or** ☐IRC Valves Closed, CGC-V-51 and (check valve CGC-V-46 installed)
X-HVAC-1 Figure 5, (Sheet 39 of 41)	**NOTE**: MODEs 1,2,3 and 4 blind flange installed. ☐MODEs 5 and 6 spool piece installed IRC CAP-V2 or ORC CAP-V1 closed or capable of being closed by an operable automatic closure device and CAP-V5 closed. **or** ☐Blind flange installed and CAP-V5 closed.
X-HVAC-2 Figure 5, (Sheet 39 of 41)	**NOTE**: MODEs 1,2,3 and 4 blind flange installed. ☐ MODEs 5 and 6 spool piece installed IRC CAP-V3 or ORC CAP-V4 closed or capable of being closed by an operable automatic closure device and CAP-V6 closed. **or** ☐Blind flange installed and CAP-V6 closed.
Equip Hatch Emergency Exit Figure 5, (Sheet 40 of 41)	☐Both Valves LD-V8 and LD-V9 closed and outside door closed. **or** ☐IRC Personnel Hatch closed.
Personnel Hatch Figure 5, (Sheet 41 of 41)	☐Both Valves LD-V6 and LD-V7 closed and outside door closed. **or** ☐IRC Personnel Hatch closed.

Figure 6: Valves Associated With Penetrations

(Sheet 1 of 4)

NOTE

The information in this table is included in the Master Equipment List (Engineering Database and MAXIMO). Any changes to this table **must** be reflected in the Master Equipment List (Engineering Database and MAXIMO).

CAH-FV6572	(X-52A)
CAH-FV6573	(X-52A)
CAH-FV6574	(X-52B)
CAH-V8	(X-52B)
CAH-V12	(X-52B)
CAP-V1	(X-1 HVAC)
CAP-V2	(X-1 HVAC)
CAP-V3	(X-2 HVAC)
CAP-V4	(X-2 HVAC)
CAP-V5	(X-1 HVAC)
CAP-V6	(X-2 HVAC)
CBS-V8	(X-61)
CBS-V11	(X-14)
CBS-V12	(X-14)
CBS-V14	(X-60)
CBS-V17	(X-15)
CBS-V18	(X-15)
CBS-V20	(X-15)
CBS-V22	(X-14)
CBS-V88	(X-61)
CBS-V89	(X-61)
CBS-V90	(X-60)
CBS-V91	(X-60)
CBS-V115	(X-61)
CBS-V116	(X-60)
CBS-V167	(X-61)
CBS-V168	(X-60)
CC-V57	(X-20)
CC-V121	(X-21)
CC-V122	(X-21)
CC-V168	(X-20)
CC-V175	(X-23)
CC-V176	(X-23)
CC-V256	(X-22)
CC-V257	(X-22)
CC-V410	(X-21)
CC-V474	(X-22)
CC-V840	(X-23)
CC-V845	(X-20)
CC-V1092	(X-48A)
CC-V1093	(X-48A)
CC-V1094	(X-48B)
CC-V1095	(X-48B)
CC-V1101	(X-49A)
CC-V1102	(X-49A)
CC-V1103	(X-49A)
CC-V1107	(X-49B)
CC-V1108	(X-49B)
CC-V1109	(X-49B)
CC-V1110	(X-48A)
CC-V1114	(X-48B)
CGC-V3	(X-75B)
CGC-V4	(X-72B)
CGC-V7	(X-72A)
CGC-V8	(X-72A)
CGC-V9	(X-71A)
CGC-V10	(X-75A)
CGC-V14	(X-72C)
CGC-V15	(X-75C)
CGC-V24	(X-74B)
CGC-V25	(X-71B)
CGC-V28	(X-71C)
CGC-V30	(X-71A)
CGC-V32	(X-74A)
CGC-V36	(X-74C)
CGC-V43	(X-76B)
CGC-V44	(X-76B)
CGC-V45	(X-76B)
CGC-V46	(X-38B)
CGC-V49	(X-72B)
CGC-V50	(X-71B)
CGC-V51	(X-38B)
COP-V1	(X-18)
COP-V2	(X-18)
COP-V3	(X-16)
COP-V4	(X-16)
COP-V9	(X-18)
COP-V10	(X-16)
CS-V4	(X-28)
CS-V20	(X-29)
CS-V36	(X-30)
CS-V52	(X-31)
CS-V142	(X-33)
CS-V143	(X-33)
CS-V144	(X-33)
CS-V149	(X-37A)
CS-V150	(X-37A)
CS-V154	(X-31)
CS-V158	(X-30)
CS-V162	(X-29)
CS-V166	(X-28)
CS-V167	(X-37B)
CS-V168	(X-37B)
CS-V506	(X-28)
CS-V510	(X-29)
CS-V512	(X-30)
CS-V515	(X-31)
CS-V553	(X-33)
CS-V555	(X-33)
CS-V794	(X-37B)
CS-V815	(X-37A)
CS-V884	(X-37A)

Figure 6: Valves Associated With Penetrations

(Sheet 2 of 4)

NOTE

The information in this table is included in the Master Equipment List (Engineering Database and MAXIMO). Any changes to this table **must** be reflected in the Master Equipment List (Engineering Database and MAXIMO).

CS-V885	(X-37A)	MS-V5	(X-1)	MS-V48	(X-4)
		MS-V6	(X-1)	MS-V49	(X-4)
DM-V4	(X-36A)	MS-V7	(X-1)	MS-V50	(X-4)
DM-V5	(X-36A)	MS-V8	(X-1)	MS-V51	(X-4)
DM-V18	(X-36A)	MS-V9	(X-1)	MS-V52	(X-4)
		MS-V10	(X-1)	MS-V53	(X-4)
FP-V587	(X-38A)	MS-V11	(X-1)	MS-V54	(X-4)
FP-V588	(X-38A)	MS-V12	(X-1)	MS-V55	(X-4)
FP-V592	(X-76A)	MS-V13	(X-1)	MS-V56	(X-4)
		MS-V14	(X-1)	MS-V57	(X-4)
FW-V30	(X-5)	MS-V19	(X-2)	MS-V58	(X-4)
FW-V39	(X-6)	MS-V20	(X-2)	MS-V86	(X-1)
FW-V48	(X-7)	MS-V21	(X-2)	MS-V88	(X-2)
FW-V57	(X-8)	MS-V22	(X-2)	MS-V90	(X-3)
FW-V76	(X-5)	MS-V23	(X-2)	MS-V92	(X-4)
FW-V82	(X-6)	MS-V24	(X-2)	MS-V97	(X-4)
FW-V88	(X-7)	MS-V25	(X-2)	MS-V98	(X-1)
FW-V94	(X-8)	MS-V26	(X-2)	MS-V99	(X-2)
		MS-V27	(X-2)	MS-V102	(X-3)
IA-V530	(X-68)	MS-V28	(X-2)	MS-V127	(X-1)
IA-V531	(X-68)	MS-V29	(X-2)	MS-V128	(X-2)
IA-V537	(X-68)	MS-V30	(X-2)	MS-V171	(X-1)
IA-V538	(X-68)	MS-V33	(X-3)	MS-V172	(X-2)
IA-V539	(X-68)	MS-V34	(X-3)	MS-V180	(X-1)
		MS-V35	(X-3)	MS-V181	(X-2)
LD-V1	(X-71D)	MS-V36	(X-3)	MS-V182	(X-3)
LD-V2	(X-74D)	MS-V37	(X-3)	MS-V183	(X-4)
LD-V6	(Pers. Htch)	MS-V38	(X-3)	MS-V204	(X-1)
LD-V7	(Pers. Htch)	MS-V39	(X-3)	MS-V205	(X-2)
LD-V8	(Eqip. Htch)			MS-V206	(X-3)
LD-V9	(Eqip. Htch)	MS-V40	(X-3)	MS-V207	(X-4)
LD-V10	(X-62)	MS-V41	(X-3)	MS-V276	(X-1)
LD-V11	(X-62)	MS-V42	(X-3)	MS-V277	(X-2)
		MS-V43	(X-3)	MS-V278	(X-3)
MS-V3	(X-1)	MS-V44	(X-3)	MS-V279	(X-4)
MS-V4	(X-1)	MS-V47	(X-4)	MS-V295	(X-1)

Figure 6: Valves Associated With Penetrations

(Sheet 3 of 4)

NOTE

The information in this table is included in the Master Equipment List (Engineering Database and MAXIMO). Any changes to this table **must** be reflected in the Master Equipment List (Engineering Database and MAXIMO).

MS-V296	(X-2)
MS-V297	(X-3)
MS-V298	(X-4)
MS-V393	(X-1)
MS-V394	(X-2)
MS-V397	(X-1)
MS-V398	(X-1)
MS-V412	(X-2)
MS-V413	(X-2)
MSD-V44	(X-1)
MSD-V45	(X-2)
MSD-V46	(X-3)
MSD-V47	(X-4)
NG-FV4609	(X-40A)
NG-FV4610	(X-40A)
NG-V13	(X-36B)
NG-V14	(X-36B)
NG-V39	(X-1)
NG-V40	(X-2)
NG-V41	(X-3)
NG-V42	(X-4)
RC-FV2830	(X-35B)
RC-FV2831	(X-35B)
RC-FV2832	(X-35C)
RC-FV2833	(X-35D)
RC-FV2836	(X-40B)
RC-FV2837	(X-40B)
RC-FV2840	(X-35B)
RC-FV2874	(X-35C)
RC-FV2876	(X-35D)
RC-FV2894	(X-35C)
RC-FV2896	(X-35D)
RC-V23	(X-9)
RC-V24	(X-9)
RC-V88	(X-10)
RC-V89	(X-10)
RC-V155	(X-5)
RC-V156	(X-5)
RC-V157	(X-5)
RC-V158	(X-5)
RC-V159	(X-5)
RC-V160	(X-5)
RC-V161	(X-5)
RC-V162	(X-5)
RC-V163	(X-6)
RC-V164	(X-6)
RC-V165	(X-6)
RC-V166	(X-6)
RC-V167	(X-6)
RC-V168	(X-6)
RC-V169	(X-6)
RC-V170	(X-6)
RC-V171	(X-7)
RC-V172	(X-7)
RC-V173	(X-7)
RC-V174	(X-7)
RC-V175	(X-7)
RC-V176	(X-7)
RC-V177	(X-7)
RC-V178	(X-7)
RC-V179	(X-8)
RC-V180	(X-8)
RC-V181	(X-8)
RC-V182	(X-8)
RC-V183	(X-8)
RC-V184	(X-8)
RC-V185	(X-8)
RC-V186	(X-8)
RC-V312	(X-35B)
RC-V314	(X-35C)
RC-V337	(X-35D)
RC-V378	(X-35D)
RC-V379	(X-35D)
RC-V380	(X-8)
RC-V381	(X-5)
RC-V382	(X-6)
RC-V383	(X-7)
RH-V14	(X-11)
RH-V26	(X-12)
RH-V32	(X-13)
RH-V70	(X-13)
RMW-V29	(X-36C)
RMW-V30	(X-36C)
RMW-V137	(X-36C)
SA-V1042	(X-67)
SA-V229	(X-67)
SB-V1	(X-63)
SB-V2	(SG A)
SB-V3	(X-64)
SB-V4	(SG B)
SB-V5	(X-65)
SB-V6	(SG C)
SB-V7	(X-66)
SB-V8	(SG D)
SB-V9	(X-63)
SB-V10	(X-64)

Figure 6: Valves Associated With Penetrations

(Sheet 4 of 4)

NOTE

The information in this table is included in the Master Equipment List (Engineering Database and MAXIMO). Any changes to this table **must** be reflected in the Master Equipment List (Engineering Database and MAXIMO).

SB-V11	(X-65)
SB-V12	(X-66)
SB-V181	(X-63)
SB-V183	(X-64)
SB-V185	(X-65)
SB-V187	(X-66)
SB-V189	(SG A)
SB-V191	(SG B)
SB-V193	(SG C)
SB-V195	(SG D)
SF-V86	(X-39)
SF-V87	(X-39)
SF-V101	(X-39)
SI-V61	(X-35A)
SI-V62	(X-35A)
SI-V70	(X-35A)
SI-V77	(X-26)
SI-V102	(X-25)
SI-V114	(X-27)
SI-V138	(X-24)
SI-V139	(X-24)
SI-V140	(X-24)
SI-V157	(X-35A)
SI-V158	(X-24)
SI-V231	(X-26)
SI-V234	(X-27)
SI-V237	(X-25)
SI-V240	(X-24)
SI-V247	(X-35A)
SI-V272	(X-26)
SI-V297	(X-24)
SS-FV2857	(X-19)

SS-V272	(X-19)
SS-V273	(X-19)
VG-FV1661	(X-17)
VG-FV1712	(X-17)
WLD-FV8330	(X-34)
WLD-FV8331	(X-34)
WLD-V81	(X-32)
WLD-V82	(X-32)
WLD-V209	(X-34)
WLD-V213	(X-32)

Form A: Tracking Work Affecting Containment Integrity

(Sheet 1 of 2)

Section 1: Equipment Hatch Removal

SUPERVISOR	INDIVIDUAL DESIGNATED FOR CLOSURE	METHOD OF CONTACT FOR RESPONSIBLE INDIVIDUAL	ACTIONS REQUIRED AND ESTIMATED TIME TO CLOSURE	WORK ORDER NUMBER	COMMENTS

Section 2: All other penetrations except for the Equipment Hatch

ITEM NUMBER	PAGE # FROM OS1056.03 FIGURE 4	PENE NUMBER	SUPERVISOR	DESCRIPTION OF ACTIVITY	REMARKS i.e. isolation time, special instructions	WORK ORDER NUMBER

Form A: Tracking Work Affecting Containment Integrity

(Sheet 2 of 2)

ITEM NUMBER	PAGE # FROM OS1056.03 FIGURE 4	PENE NUMBER	SUPERVISOR	DESCRIPTION OF ACTIVITY	REMARKS i.e. isolation time, special instructions	WORK ORDER NUMBER

PROCEDURE BASIS INFORMATION

Archived information located in the Basis Section, such as revision, change status, table and step references are not updated as the procedure is changed or revised.

Rev. 01: No changes made; converted to format specified in MNPR, PR 3.2. This procedure was converted on August 31, 1998.

Rev. 00: Original Issue.

Rev. 00, Chg. 01:

- Changed the identification of penetrations X-58 and X-59 to E-58 and E-59.

Rev. 00, Chg. 02:

- Added the valves CBS-V167 and CBS-V115 associated with X-61 per MMOD 95-509.

Rev. 00, Chg. 03:

- Added MS-PI-3051, 3052, 3053, 3054 and valves MS-V97, 98, 99, 102 associated with X-1, X-2, X-3 and X-4.

Rev. 00, Chg. 04:

- Added valves CBS-V168 and CBS-V116 associated with X-60 per MMOD 95-509. Corrected error on X-36A drawing.

Rev. 00, Chg. 05:

- Removed FW-V173, 174, 175 and 176 associated with X-1, X-2, X-3, X-4, X-5, X-6, X-7 and X-8. (95-DCR-042)

Rev. 00, Chg. 06:

- To incorporate changes per 95-MMOD-508 which reinstalled CAP penetration piping test connections, CAP-V5 and CAP-V6. (X-1 HVAC and X-2 HVAC)

Rev. 00, Chg. 07:

- Corrected errors on Attachment 2, Sheets 3, 14 and 30 of 40; Attachment 3, Sheets 5, 6 and 10 of 144; Attachment 4, Sheet 1 of 3.

Rev. 00, Chg. 08:

- Updated Attachment 2, Sheet 39 of 40, to incorporate changes from 97 MMOD 522.

Rev. 00, Chg. 09:

- Added figure for penetration X-62, Fuel Transfer Tube, to Attachment 2.

Rev. 00, Chg. 10:

- Added step 3.1 and footnotes to E-58 and E-59 drawings in Attachment 2 to highlight Technical Requirements fire barrier concerns.

Rev. 00, Chg. 11: (July 1998)

- Removed approval and effective date from cover (no longer required per MNPR).
- Modified figures on Attachment 2, pages 1, 2, 3, and 4. MOV's for 1-SB-V189, V191, V193 and V195 closed to gear operators.

SETPOINT: MULTIPLE

INITIATING DEVICE: SM-UQ-6700

ASSOCIATED AUTO ACTIONS: NONE

REVISION: 04

1.0 RECOMMENDED ACTIONS:

1.1 CHECK THE EVENT LIGHT (YELLOW) OR THE OBE LIGHT (RED) IS LIT AT SM-CP-58.

1.2 CONTACT I&C TO PERFORM IX1670.905, "SEISMIC MONITORING RETURN TO OPERABLE STATUS FOLLOWING A SEISMIC EVENT".

1.3 CHECK THE MCB AND PLANT CONDITIONS FOR ANY ABNORMALITIES.

1.4 CONTACT TECH SUPPORT TO PERFORM ES1802.001, "EARTHQUAKE RESPONSE".

1.5 REFER TO ER-1.1, CLASSIFICATION OF EMERGENCIES.

1.6 REFER TO TR21-4.3.3.3.2, SEISMIC INSTRUMENTATION.

1.7 REPORT THE SEISMIC EVENT TO THE NATIONAL EARTHQUAKE INFORMATION CENTER AT 1-303-273-8500.

2.0 SOURCES OF ADDITIONAL INFORMATION:

2.1 UFSAR SECTION 3.7(B).4.3

2.2 SCHEMATIC 310957, SH.4

□

SETPOINT: NONE

INITIATING DEVICE: D6094, D6095, D6096, D6097 ALL IN ALARM

ASSOCIATED AUTO ACTIONS: NONE

REVISION: 02

1.0 RECOMMENDED ACTIONS:

1.1 IF VERIFICATION ON MCB REAR SHOWS DC BUSSES' VOLTAGES LESS THAN 90 VDC - TRIP RX AND GO TO E-0, REACTOR TRIP AND SAFETY INJECTION, AS APPLICABLE.

1.2 REFER TO ABNORMAL PROCEDURE OS1248.01, LOSS OF A VITAL 125 VDC BUS.

1.3 REFER TO TECHNICAL SPECIFIACTIONS, A.C. SOURCES.

1.4 REFER TO ER1.1, CLASSIFICATION OF EMERGENCIES, SECTION 6D.

1.5 ATTEMPT TO RESTORE VITAL DC POWER AND/OR SHED LESS VITAL DC LOADS.

1.6 INSTALL PORTABLE BATTERY CHARGERS AS DIRECTED PER OS1048.13, VITAL BUS 11A OPERATION, OS1048.14, VITAL BUS 11B OPERATION, OS1048.15, VITAL BUS 11C OPERATION, OS1048.16, VITAL BUS 11D OPERATION.

NOTE

VITAL DC BUSSES 11A AND 11B SHOULD PREFERENTIALLY BE RESTORED BEFORE DC BUSSES 11C AND 11D.

2.0 SOURCES OF ADDITIONAL INFORMATION:

2.1 VAS LOGIC BY COMPUTER LBC 1-EDE-040396

2.2 UFSAR CHAPTER 8,SECTION 8.3.2, DC POWER SYSTEM

2.3 BUS FAILURE ANALYSIS, VITAL 125 VOLT D.C.

2.4 T.S. 3.8.2.1, D.C. SOURCES

2.5 T.S. 3.8.2.2, D.C. SOURCES

2.6 ONE LINE DIAGRAM, 1-NHY-310042, SHEET 1 AND 2

Enclosure 6

Calculations

Containment Barrier Potential Loss - Containment Radiation Monitor Reading

NEI 99-01, Rev. 4, Basis: Unless there is a (site-specific) analysis justifying a higher value, it is recommended that a radiation monitor reading corresponding to 20% fuel clad damage be specified here.
Calculation Basis: SBC-1023, Update of METPAC Data Affected by Power Uprate and AST Implementation.
The calculation was performed using an assumed value of 20% fuel clad failure.

Decay Time (hrs)	Core NG (Ci) (Note 1)	Fraction Core NG to Cnmt (Note 2)	Cnmt NG Conc (uCi/cc) (Note 3)	J(t) uCi-hr / cc-R (Note 4)	Cnmt Mon R/hr (Note 5)
0.5	4.33E+08	1.00E-02	5.66E+01	3.30E-02	1,715
1	3.90E+08	1.00E-02	5.10E+01	3.91E-02	1,305
2	3.62E+08	1.00E-02	4.73E+01	4.71E-02	1,003
5	3.27E+08	1.00E-02	4.26E+01	6.93E-02	615
10	2.96E+08	1.00E-02	3.86E+01	1.05E-01	369
20	2.53E+08	1.00E-02	3.31E+01	1.56E-01	212

Gap fraction of core NG inventory (assumed)	5 %	Reg Guide 1.183, Table 2
Assumed gap release/ fuel clad damage for EAL	20 %	NEI 99-01, Rev. 4
Assumed % of core NG inventory to containment	1 %	[0.05 * 0.20]

Free volume of containment	2.70E+06	ft^3	per UFSAR Sec. 15B.2.II.A
Free volume of containment	7.66E+10	ml	[2.7E+06 * 28316.846592 ml/ft3]
Free volume of containment	7.66E+10	cc	per UFSAR Sec. 15B.2.II.A
Free volume of containment	7.66E+04	m^3	per UFSAR Sec. 15B.2.II.A

Note 1 - Values taken from SBC-1023, Table 3.10
Note 2 - 5% * 20% = 1%
Note 3 - [(Core NG * 1E+6 uCi/Ci) * .01]/7.66E+10 cc
Note 4 - Values taken from SBC-1023, Tables 4.5 and 4.6
Note 5 - Cont NG Conc/J(t)

RCS Barrier Loss - Containment Radiation Monitor Reading

NEI 99-01, Rev. 4, Basis: The reading should be calculated assuming the instantaneous release and dispersal of the reactor coolant noble gas and iodine inventory associated with normal operating concentrations (i.e., within T/S) into the containment atmosphere.
Calculation Basis: SBC-1023, Update of METPAC Data Affected by Power Uprate and AST Implementation.
The calculation was performed using RCS activity values at Technical Specification limits.

Decay Time (hrs) (Note 1)	RCS NG Conc (uCi/gm) (Note 1)	RCS NG (uCi) (Note 2)	Cnmt NG Conc uCi/cc (Note 3)	J(t) uCi-hr / cc-R (Note 4)	Cnmt Mon R/hr (Note 5)
0.5	1.51E+02	4.95E+10	6.47E-01	3.30E-02	20
1	1.46E+02	4.78E+10	6.24E-01	3.91E-02	16
2	1.39E+02	4.55E+10	5.94E-01	4.71E-02	13
5	1.26E+02	4.13E+10	5.39E-01	6.93E-02	8
10	1.15E+02	3.76E+10	4.91E-01	1.05E-01	5
20	1.03E+02	3.38E+10	4.42E-01	1.56E-01	3

Volume of water in RCS	1.15E+04	ft^3	UFSAR Table 5.1-1
Gallons of watter in RCS	8.62E+04	gal	[12100 ft3 * 7.48 gal/ft3]
lbs of water in RCS	7.19E+05	lbs	[90508 gal * 8.345 lbs/gal]
gms or cc of water in RCS	3.27E+08	gm	[755289 lbs * 454 gms/lb]
Free volume of containment	2.70E+06	ft^3	per UFSAR Sec. 15B.2.II.A
Free volume of containment	7.66E+10	ml	[2.7E+06 * 28316.846592 ml/ft3]
Free volume of containment	7.66E+10	cc	
Free volume of containment	7.66E+04	m^3	per UFSAR Sec. 15B.2.II.A

Note 1 - Values from SBC-1023, Table 3.2 and 3.9
Also see UFSAR Table 15C-2
Note 2 - ((uCi/gm)*3.27E+8 gm)
Note 3 - (uCi)/7.66E+10 cc
Note 4 - Values taken from SBC-1023, Tables 4.5 and 4.6
Note 5 - Cont NG Conc/J(t)

Fuel Clad Barrier Loss - Containment Radiation Monitor Reading

NEI 99-01, Rev. 4, Basis: The reading should be calculated assuming the instantaneous release and dispersal of the reactor coolant noble gas and iodine inventory associated with a concentration of 300 uCi/gm dose equivalent I-131 into the containment atmosphere.

Calculation Basis: SBC-1023, Update of METPAC Data Affected by Power Uprate and AST Implementation. The calculation was performed using RCS activity values associated with a concentration of 300 uCi/gm dose equivalent I-131.

Total Ci of DEI-131 in RCS =
[300 uCi/cc * 3.27E+8 gm]/1E+6 uCi/Ci = 9.81E+4 Ci

Decay Time (hrs)	DEI-131 in RCS (Ci) (Note 1)	NG in Core (Ci) (Note 2)	DEI-131 in Core (Ci) (Note 3)	NG in Cont (Ci) (Note 4)	NG conc in Cont (uCi/cc) (Note 5)	J(t) uCi-hr / cc-R (Note 6)	Cnmt Post-LOCA (R/hr) (Note 7)
0.5	9.81E+04	4.33E+08	1.32E+08	3.21E+05	4.19E+00	3.30E-02	127
1	9.81E+04	3.90E+08	1.32E+08	2.91E+05	3.79E+00	3.91E-02	97
2	9.81E+04	3.62E+08	1.30E+08	2.73E+05	3.56E+00	4.71E-02	76
5	9.81E+04	3.27E+08	1.25E+08	2.56E+05	3.34E+00	6.93E-02	48
10	9.81E+04	2.96E+08	1.18E+08	2.45E+05	3.20E+00	1.05E-01	31
20	9.81E+04	2.53E+08	1.08E+08	2.31E+05	3.01E+00	1.56E-01	19

Note 1 - See calculation above
Note 2 - Values taken from SBC-1023, Table 3.10
Note 3 - Values taken from SBC-1023, Table 5.5
Note 4 - 9.81E+4 * (NG in core/DEI-131 in core)
Note 5 - (NG in Cont Ci/7.66E+10 cc) * 1E+6 uCi/Ci
Note 6 - Values taken from SBC-1023, Tables 4.5 and 4.6
Note 7 - NG conc in Cont/J(t)

Free volume of containment	7.66E+10 cc
Volume of RCS	3.27E+08 gm

Prepared by: _____ _____
David Young — Date
Senior Nuclear Analyst

Reviewed by: _____ _____
Bill Cash — Date
Radiation Protection Manager

Approved by: _____ _____
Sue Perkins-Grew — Date
Emergency Preparedness Manager

Plant Vent Effluent Calculation for a Site Area Emergency

Isotope (Note 1)	DFB_I mrem-m^3 / pCi-yr	DFB_I mrem-m^3 / uCi-yr (Note 2)		Avg Disp Factor sec/m^3 (Note 3)	DF'_I mrem-sec / uCi-yr
Xe-138	8.83E-03	8.83E+03	*	8.50E-07	7.51E-03
Kr-87	5.92E-03	5.92E+03	*	8.50E-07	5.03E-03
Kr-88	1.47E-02	1.47E+04	*	8.50E-07	1.25E-02
Kr-85m	1.17E-03	1.17E+03	*	8.50E-07	9.95E-04
Xe-135	1.81E-03	1.81E+03	*	8.50E-07	1.54E-03
Xe-133	2.94E-04	2.94E+02	*	8.50E-07	2.50E-04
Kr-85	1.61E-05	1.61E+01	*	8.50E-07	1.37E-05
Xe-131m	9.15E-05	9.15E+01	*	8.50E-07	7.78E-05
Xe-133m	2.51E-04	2.51E+02	*	8.50E-07	2.13E-04
Xe-135m	3.12E-03	3.12E+03	*	8.50E-07	2.65E-03
					3.08E-02 mrem-sec / uCi-yr

DF'_I (per year)

3.08E-02 mrem-sec / uCi-yr * 1.14E-04 yr / hr (Note 4) = **DF'_I (per hour)** 3.51E-06 mrem-sec / uCi-hr

1/(DF'I (per hour))

2.85E+05 uCi-hr / mrem-sec (Note 5) * 1.00E+02 mrem / hr (Note 6) = **WRGM release rate** 2.85E+07 uCi / sec

Note 1 - from ODCM, Appendix B, Section 5.2.1.2
Note 2 - DFBi * 1E+06 pCi/uCi
Note 3 - From ODCM, Appendix B, Table B.7-4
Note 4 - 1/(365*24) or 1/hours in a year
Note 5 - 1/(3.51E-06)
Note 6 - Dose rate for 1 hour needed to equal 100 mR

Plant Vent Effluent Calculation for a General Emergency

Isotope (Note 1)	DFB_I mrem-m^3 / pCi-yr	DFB_I mrem-m^3 / uCi-yr (Note 2)		Avg Disp Factor sec/m^3 (Note 3)	DF'_I mrem-sec / uCi-yr
Xe-138	8.83E-03	8.83E+03	*	8.50E-07	7.51E-03
Kr-87	5.92E-03	5.92E+03	*	8.50E-07	5.03E-03
Kr-88	1.47E-02	1.47E+04	*	8.50E-07	1.25E-02
Kr-85m	1.17E-03	1.17E+03	*	8.50E-07	9.95E-04
Xe-135	1.81E-03	1.81E+03	*	8.50E-07	1.54E-03
Xe-133	2.94E-04	2.94E+02	*	8.50E-07	2.50E-04
Kr-85	1.61E-05	1.61E+01	*	8.50E-07	1.37E-05
Xe-131m	9.15E-05	9.15E+01	*	8.50E-07	7.78E-05
Xe-133m	2.51E-04	2.51E+02	*	8.50E-07	2.13E-04
Xe-135m	3.12E-03	3.12E+03	*	8.50E-07	2.65E-03
					3.08E-02 mrem-sec / uCi-yr

DF'_I (per year) 3.08E-02 mrem-sec / uCi-yr * 1.14E-04 yr / hr (Note 4) = **DF'_I (per hour)** 3.51E-06 mrem-sec / uCi-hr

1/(DF'_I (per hour)) 2.85E+05 uCi-hr / mrem-sec (Note 5) * 1.00E+03 mrem / hr (Note 6) = **WRGM release rate** 2.85E+08 uCi / sec

Note 1 - from ODCM, Appendix B, Section 5.2.1.2
Note 2 - DFBi * 1E+06 pCi/uCi
Note 3 - From ODCM, Appendix B, Table B.7-4
Note 4 - 1/(365*24) or 1/hours in a year
Note 5 - 1/(3.51E-06)
Note 6 - Dose rate for 1 hour needed to equal 1 R

Main Steam Line Effluent Calculation for an Unusual Event

Isotope (Note 1)	DFB_I mrem-m^3 / pCi-yr	DFB_I mrem-m^3 / uCi-yr (Note 2)		Avg Disp Factor sec/m^3 (Note 3)	DF'_I mrem-sec / uCi-yr
Xe-138	8.83E-03	8.83E+03	*	3.40E-06	3.00E-02
Kr-87	5.92E-03	5.92E+03	*	3.40E-06	2.01E-02
Kr-88	1.47E-02	1.47E+04	*	3.40E-06	5.00E-02
Kr-85m	1.17E-03	1.17E+03	*	3.40E-06	3.98E-03
Xe-135	1.81E-03	1.81E+03	*	3.40E-06	6.15E-03
Xe-133	2.94E-04	2.94E+02	*	3.40E-06	1.00E-03
Kr-85	1.61E-05	1.61E+01	*	3.40E-06	5.47E-05
Xe-131m	9.15E-05	9.15E+01	*	3.40E-06	3.11E-04
Xe-133m	2.51E-04	2.51E+02	*	3.40E-06	8.53E-04
Xe-135m	3.12E-03	3.12E+03	*	3.40E-06	1.06E-02
					1.23E-01 mrem-sec / uCi-yr

DF'_I (per year)

1.23E-01 mrem-sec / uCi-yr * 1.14E-04 yr / hr (Note 4) = **DF'_I (per hour)** 1.41E-05 mrem-sec / uCi-hr

1/(DF'_I (per hour))

7.12E+04 uCi-hr / mrem-sec (Note 5) * 5.70E-02 mrem / hr (Note 6) = **S.L. release rate** 4.06E+03 uCi / sec

S.L. release rate 4.06E+03 uCi / sec / **S.L. Flowrate** 2.50E+06 cc / sec (Note 7) = **Release concentration** 1.62E-03 uCi / cc

This table converts a release concentration to a main steam line monitor dose rate.

Decay Time (hrs)	MS $J_{(t)}$ uCi-hr / cc-mR		Rel Conc uCi / cc		Inverse Dose Rate hr/mR	Dose Rate mR/hr	Rounded Dose Rate mR/hr
0.5	1.92E-02	/	1.62E-03	=	1.18E+01	0	0
1	2.16E-02	/	1.62E-03	=	1.33E+01	0	0
2	2.67E-02	/	1.62E-03	=	1.65E+01	0	0
5	4.93E-02	/	1.62E-03	=	3.04E+01	0	0
10	1.27E-01	/	1.62E-03	=	7.83E+01	0	0
20	4.97E-01	/	1.62E-03	=	3.06E+02	0	0
	(Note 8)					(Note 9)	

Note 1 - from ODCM, Appendix B, Section 5.2.1.2
Note 2 - DFBi * 1E+06 pCi/uCi
Note 3 - From ODCM, Appendix B, Table B.7-6
Note 4 - 1/(365*24) or 1/hours in a year
Note 5 - 1/(1.41E-5)
Note 6 - Dose rate for 1 hour needed to equal ODCM total body dose rate of 500 mR/yr
Note 7 - from SBC-709, page 20 - Used SRV flow as bounding (I.e., larger than ASDV).
Note 8 - from SBC-709, page 19
Note 9 - 1/Inverse Dose Rate

Main Steam Line Effluent Calculation for an Alert

Isotope (Note 1)	DFB_I mrem-m^3 / pCi-yr	DFB_I mrem-m^3 / uCi-yr (Note 2)		Avg Disp Factor sec/m^3 (Note 3)	DF'_I mrem-sec / uCi-yr
Xe-138	8.83E-03	8.83E+03	*	3.40E-06	3.00E-02
Kr-87	5.92E-03	5.92E+03	*	3.40E-06	2.01E-02
Kr-88	1.47E-02	1.47E+04	*	3.40E-06	5.00E-02
Kr-85m	1.17E-03	1.17E+03	*	3.40E-06	3.98E-03
Xe-135	1.81E-03	1.81E+03	*	3.40E-06	6.15E-03
Xe-133	2.94E-04	2.94E+02	*	3.40E-06	1.00E-03
Kr-85	1.61E-05	1.61E+01	*	3.40E-06	5.47E-05
Xe-131m	9.15E-05	9.15E+01	*	3.40E-06	3.11E-04
Xe-133m	2.51E-04	2.51E+02	*	3.40E-06	8.53E-04
Xe-135m	3.12E-03	3.12E+03	*	3.40E-06	1.06E-02
					1.23E-01 mrem-sec / uCi-yr

DF'_I (per year): 1.23E-01 mrem-sec / uCi-yr * 1.14E-04 yr / hr (Note 4) = **DF'_I (per hour)**: 1.41E-05 mrem-sec / uCi-hr

1/(DF'_I (per hour)): 7.12E+04 uCi-hr / mrem-sec (Note 5) * 1.14E+01 mrem / hr (Note 6) = **S.L. release rate**: 8.11E+05 uCi / sec

S.L. release rate: 8.11E+05 uCi / sec / **S.L. Flowrate**: 2.50E+06 cc / sec (Note 7) = **Release concentration**: 3.25E-01 uCi / cc

This table converts a release concentration to a main steam line monitor dose rate.

Decay Time (hrs)	MS $J_{(t)}$ uCi-hr / cc-mR		Rel Conc uCi / cc		Inverse Dose Rate hr/mR	Dose Rate mR/hr	Rounded Dose Rate mR/hr
0.5	1.92E-02	/	3.25E-01	=	5.92E-02	17	10
1	2.16E-02	/	3.25E-01	=	6.66E-02	15	10
2	2.67E-02	/	3.25E-01	=	8.23E-02	12	10
5	4.93E-02	/	3.25E-01	=	1.52E-01	7	0
10	1.27E-01	/	3.25E-01	=	3.91E-01	3	0
20	4.97E-01	/	3.25E-01	=	1.53E+00	1	0
	(Note 8)					(Note 9)	

Note 1 - from ODCM, Appendix B, Section 5.2.1.2
Note 2 - DFBi * 1E+06 pCi/uCi
Note 3 - From ODCM, Appendix B, Table B.7-6
Note 4 - 1/(365*24) or 1/hours in a year
Note 5 - 1/(1.41E-5)
Note 6 - Dose rate for 1 hour needed to equal 200X ODCM total body dose rate of 500 mR/yr
Note 7 - from SBC-709, page 20 - Used SRV flow as bounding (I.e., larger than ASDV).
Note 8 - from SBC-709, page 19
Note 9 - 1/Inverse Dose Rate

Main Steam Line Effluent Calculation for a Site Area Emergency

Isotope (Note 1)	DFB_i mrem-m^3 / pCi-yr	DFB_i mrem-m^3 / uCi-yr (Note 2)		Avg Disp Factor sec/m^3 (Note 3)	DF'_i mrem-sec / uCi-yr
Xe-138	8.83E-03	8.83E+03	*	3.40E-06	3.00E-02
Kr-87	5.92E-03	5.92E+03	*	3.40E-06	2.01E-02
Kr-88	1.47E-02	1.47E+04	*	3.40E-06	5.00E-02
Kr-85m	1.17E-03	1.17E+03	*	3.40E-06	3.98E-03
Xe-135	1.81E-03	1.81E+03	*	3.40E-06	6.15E-03
Xe-133	2.94E-04	2.94E+02	*	3.40E-06	1.00E-03
Kr-85	1.61E-05	1.61E+01	*	3.40E-06	5.47E-05
Xe-131m	9.15E-05	9.15E+01	*	3.40E-06	3.11E-04
Xe-133m	2.51E-04	2.51E+02	*	3.40E-06	8.53E-04
Xe-135m	3.12E-03	3.12E+03	*	3.40E-06	1.06E-02
					1.23E-01 mrem-sec / uCi-yr

DF'_i (per year)				DF'_i (per hour)
1.23E-01 mrem-sec / uCi-yr	*	1.14E-04 yr / hr (Note 4)	=	1.41E-05 mrem-sec / uCi-hr

1/(DF'_i (per hour))				S.L. release rate
7.12E+04 uCi-hr / mrem-sec (Note 5)	*	1.00E+02 mrem / hr (Note 6)	=	7.12E+06 uCi / sec

S.L. release rate		S.L. Flowrate		Release concentration
7.12E+06 uCi / sec	/	2.50E+06 cc / sec (Note 7)	=	2.85E+00 uCi / cc

This table converts a release concentration to a main steam line monitor dose rate.

Decay Time (hrs)	MS $J_{(t)}$ uCi-hr / cc-mR		Rel Conc uCi / cc		Inverse Dose Rate hr/mR	Dose Rate mR/hr	Rounded Dose Rate mR/hr
0.5	1.92E-02	/	2.85E+00	=	6.74E-03	148	140
1	2.16E-02	/	2.85E+00	=	7.59E-03	132	130
2	2.67E-02	/	2.85E+00	=	9.38E-03	107	100
5	4.93E-02	/	2.85E+00	=	1.73E-02	58	50
10	1.27E-01	/	2.85E+00	=	4.46E-02	22	20
20	4.97E-01	/	2.85E+00	=	1.75E-01	6	0
	(Note 8)					(Note 9)	

Note 1 - from ODCM, Appendix B, Section 5.2.1.2
Note 2 - DFBi * 1E+06 pCi/uCi
Note 3 - From ODCM, Appendix B, Table B.7-6
Note 4 - 1/(365*24) or 1/hours in a year
Note 5 - 1/(1.41E-5)
Note 6 - Dose rate for 1 hour needed to equal 100 mR (per NEI 99-01 IC basis discussion)
Note 7 - from SBC-709, page 20 - Used SRV flow as bounding (I.e., larger than ASDV).
Note 8 - from SBC-709, page 19
Note 9 - 1/Inverse Dose Rate

Main Steam Line Effluent Calculation for a General Emergency

Isotope (Note 1)	DFB_I mrem-m^3 / pCi-yr		DFB_I mrem-m^3 / uCi-yr (Note 2)		Avg Disp Factor sec/m^3 (Note 3)	DF'_I mrem-sec / uCi-yr
Xe-138	8.83E-03		8.83E+03	*	3.40E-06	3.00E-02
Kr-87	5.92E-03		5.92E+03	*	3.40E-06	2.01E-02
Kr-88	1.47E-02		1.47E+04	*	3.40E-06	5.00E-02
Kr-85m	1.17E-03		1.17E+03	*	3.40E-06	3.98E-03
Xe-135	1.81E-03		1.81E+03	*	3.40E-06	6.15E-03
Xe-133	2.94E-04		2.94E+02	*	3.40E-06	1.00E-03
Kr-85	1.61E-05		1.61E+01	*	3.40E-06	5.47E-05
Xe-131m	9.15E-05		9.15E+01	*	3.40E-06	3.11E-04
Xe-133m	2.51E-04		2.51E+02	*	3.40E-06	8.53E-04
Xe-135m	3.12E-03		3.12E+03	*	3.40E-06	1.06E-02
						1.23E-01 mrem-sec / uCi-yr

DF'_I (per year): 1.23E-01 mrem-sec / uCi-yr * 1.14E-04 yr / hr (Note 4) = **DF'_I (per hour)**: 1.41E-05 mrem-sec / uCi-hr

1/(DF'_I (per hour)): 7.12E+04 uCi-hr / mrem-sec (Note 5) * 1.00E+03 mrem / hr (Note 6) = **S.L. release rate**: 7.12E+07 uCi / sec

S.L. release rate: 7.12E+07 uCi / sec / **S.L. Flowrate**: 2.50E+06 cc / sec (Note 7) = **Release concentration**: 2.85E+01 uCi / cc

This table converts a release concentration to a main steam line monitor dose rate.

Decay Time (hrs)	MS $J_{(t)}$ uCi-hr / cc-mR		Rel Conc uCi / cc		Inverse Dose Rate hr/mR	Dose Rate mR/hr	Rounded Dose Rate mR/hr
0.5	1.92E-02	/	2.85E+01	=	6.74E-04	1483	1,480
1	2.16E-02	/	2.85E+01	=	7.59E-04	1318	1,310
2	2.67E-02	/	2.85E+01	=	9.38E-04	1066	1,060
5	4.93E-02	/	2.85E+01	=	1.73E-03	577	570
10	1.27E-01	/	2.85E+01	=	4.46E-03	224	220
20	4.97E-01	/	2.85E+01	=	1.75E-02	57	50
	(Note 8)					(Note 9)	

Note 1 - from ODCM, Appendix B, Section 5.2.1.2
Note 2 - DFBi * 1E+06 pCi/uCi
Note 3 - From ODCM, Appendix B, Table B.7-6
Note 4 - 1/(365*24) or 1/hours in a year
Note 5 - 1/(1.41E-5)
Note 6 - Dose rate for 1 hour needed to equal 1000 mR (per NEI 99-01 IC basis discussion)
Note 7 - from SBC-709, page 20 - Used SRV flow as bounding (I.e., larger than ASDV).
Note 8 - from SBC-709, page 19
Note 9 - 1/Inverse Dose Rate

Prepared by: _____ _____

David Young
Senior Nuclear Analyst

Date

Reviewed by: _____ _____

David Robinson
Chemistry Supervisor

Date

Approved by: _____ _____

Sue Perkins-Grew
EP Manager

Date

FPL Energy
Seabrook Station

SEP# 2006012

SUBJECT: Calculation of Containment Dose Rate Values Used in FPB EALs

FROM: D. L. Young **DATE:** March 28, 2006

TO: File

Attached are the calculations for the containment dose rate values used in the Fission Product Barrier (FPB) Emergency Action Levels (EALs). The calculation number is EPCALC-06-01.

David L. Young
Senior Nuclear Analyst

DLY/dly

cc: W. Cash

FPL Energy
Seabrook Station

SEP# 2006013

SUBJECT: Calculation of Effluent Release Values Used in NEI EALs

FROM: D. L. Young **DATE:** March 28, 2006

TO: File

Attached are the calculations for the effluent release values used in the NEI Emergency Action Levels (EALs). The calculation number is EPCALC-06-02.

David L. Young
Senior Nuclear Analyst

DLY/dly

cc: D. Robinson

FPL Energy
Seabrook Station

SEP# 2006020

SUBJECT: Calculation of Value for Initiating Condition SU4, EAL #1

FROM: D. L. Young **DATE:** April 17, 2006

TO: File

Initiating Condition SU4, EAL #1 addresses a letdown radiation monitor reading that provides indication of fuel clad degradation greater than Technical Specification allowable limits. This value was calculated as follows.

- The equipment tag identifier for the Letdown Monitor is 1-RM-6520-1
- RCS noble gas activity at $100/E_{bar}$ = 1.887E+2 uCi/gm (per SBC-1023, Table 3.2)
- Noble gas activity will govern the monitor reading, not iodine
- Letdown Monitor Conversion Factor = 14.148 mR/hr/uCi/ml (per ER 4.3, Figure 12)

therefore,

The 1-RM-6520-1 reading at the Technical Specification allowable limit = 1.887E+2 ~~uCi/gm~~ * 14.148 mR/hr/~~uCi/ml~~ = 2,669.73 mR/hr or 2,670 mR/hr

The above calculation is EPCALC-06-03.

Prepared by: _____
David L. Young
Senior Nuclear Analyst

Approved by: _____
William T. Cash
Radiation Protection Manager

DLY/dly

cc:

FPL Energy
Seabrook Station

SEP# 2006021

SUBJECT: Calculation of RVLIS Values for Emergency Action Levels

FROM: D. L. Young **DATE:** May 8, 2006

TO: File

Emergency Initiating Conditions CA1, CS1 and CG1 use Reactor Vessel Level Instrumentation System (RVLIS) readings in their associated Emergency Action Levels (EALs). These RVLIS values were calculated as follows.

Assumptions and Bases

1. These Initiating Conditions are evaluated in Mode 5. It was assumed that the accident was initiated in Mode 5, and that no prior accident had occurred in a higher Mode (i.e., there is no adverse containment).

2. Since containment conditions are normal, a RVLIS value without uncertainties was utilized.

3. Per Westinghouse Electric Corporation transmittal to Public Service Company of New Hampshire, Seabrook Station Units 1 and 2, Incore Thermocouples, NAH-3203 S.O. No. NAH-4755/NAH-2.2.389, dated 01/07/87 (film location, roll #715, frame #1081)
   - From Attachment 2, a RVLIS full range indication of 66%, without uncertainties, is the middle of the hot legs.
   - From Attachment 2, a RVLIS full range indication of 55%, without uncertainties, is the top of the core.
   - From Attachment 2, a RVLIS full range value of 35% equals 3.5 feet above the bottom of the core while a RVLIS full range value of 45% equals 8.5 feet above the bottom of the core. Therefore the relationship between RVLIS full range scaling and height in the reactor vessel is 2% per foot.

4. Per Procedure OS1000.12, Operation With RCS At Reduced Inventory/Midloop Conditions
   - The radius of the hot legs (i.e., center to top/bottom) is 14.5".
   - -71 inches equals the top of the hot leg nozzles.
   - -85.5 inches equals the hot leg midplane
   - -100 inches equals the bottom of the hot leg nozzles.

Calculations

1. The RVLIS full range value at the bottom of the hot legs is 66% - (14.5"/12"/ft) * 2%/ft = 63.6%. This value is rounded to 64%.

2. The RVLIS full range value at 6" below the bottom of the hot legs is 66% - ((14.5" + 6")/12"/ft) * 2%/ft = 62.6%. This value is rounded to 63%.

3. As stated previously, the RVLIS full range value at the top of the core is 55%.

The above calculation is EPCALC-06-04.

Prepared by: _____
David L. Young
Senior Nuclear Analyst

Approved by: _____
Robert L. Couture
Principal Engineer - Nuclear

DLY/dly

cc:

Enclosure 6

Critical Safety Function Status Trees

CSF STATUS TREE WORKSHEET

TIME _____

		RED	ORANGE	YELLOW	GREEN
1.	SUBCRITICALITY (S)	FR-S.1	FR-S.1	FR-S.2	SAT
2.	CORE COOLING (C)	FR-C.1	FR-C.2	FR-C.3	SAT
3.	HEAT SINK (H)	FR-H.1		FR-H.2 FR-H.3 FR-H.4 FR-H.5	SAT
4.	INTEGRITY (P)	FR-P.1	FR-P.1	FR-P.2	SAT
5.	CONTAINMENT (Z)	FR-Z.1	FR-Z.1 FR-Z.2	FR-Z.1 FR-Z.3	SAT *NOTE*
6.	INVENTORY (I)			FR-I.1 FR-I.2 FR-I.3	SAT
7.	EMERGENCY RECIRCULATION (F)		ECA-1.2	ES-1.3	SAT
8.	RDMS (R)			SELECT HI-RAD ABNORMAL	SAT

NOTE: ***The Phase A Status Panel Lights shall be used to verify containment penetrations are isolated.***

EXPIRATION DATE 07/27/08

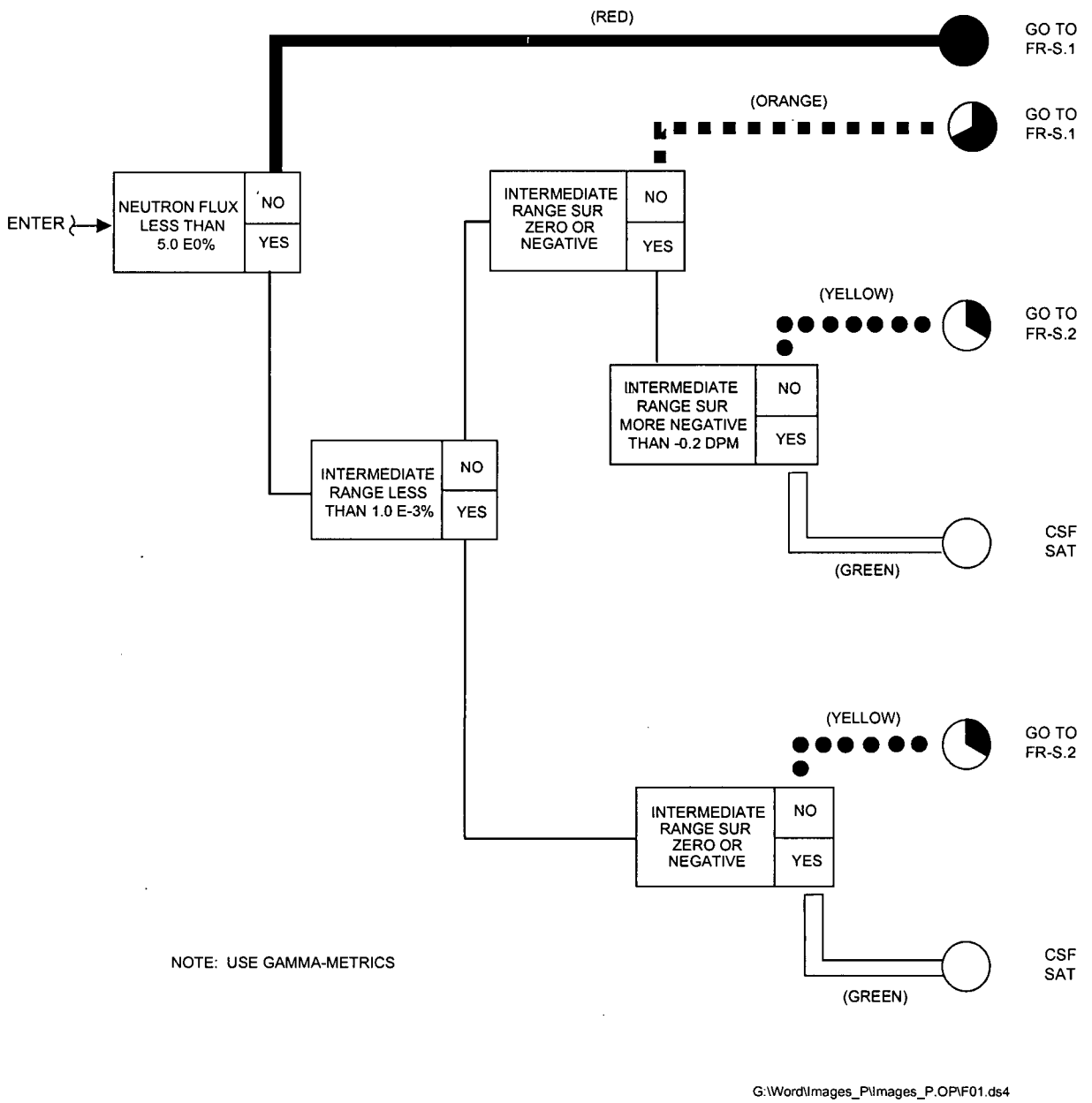

EXPIRATION DATE 07/27/08

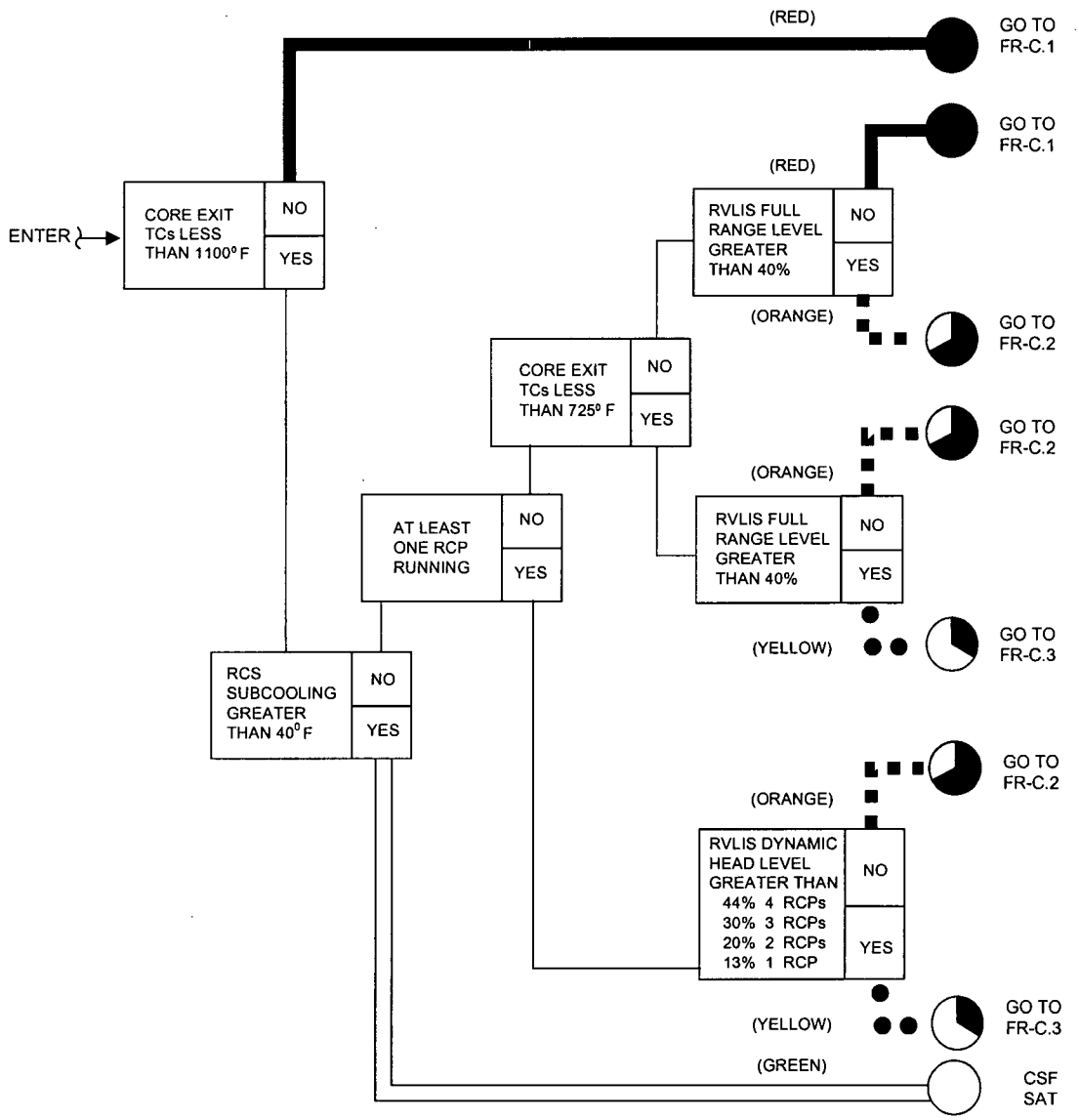

G:\Word\Images_P\Images_P.OP\F02.ds4

Number	Title	Rev./Date
F-0.3	HEAT SINK (H)	19 07/27/06

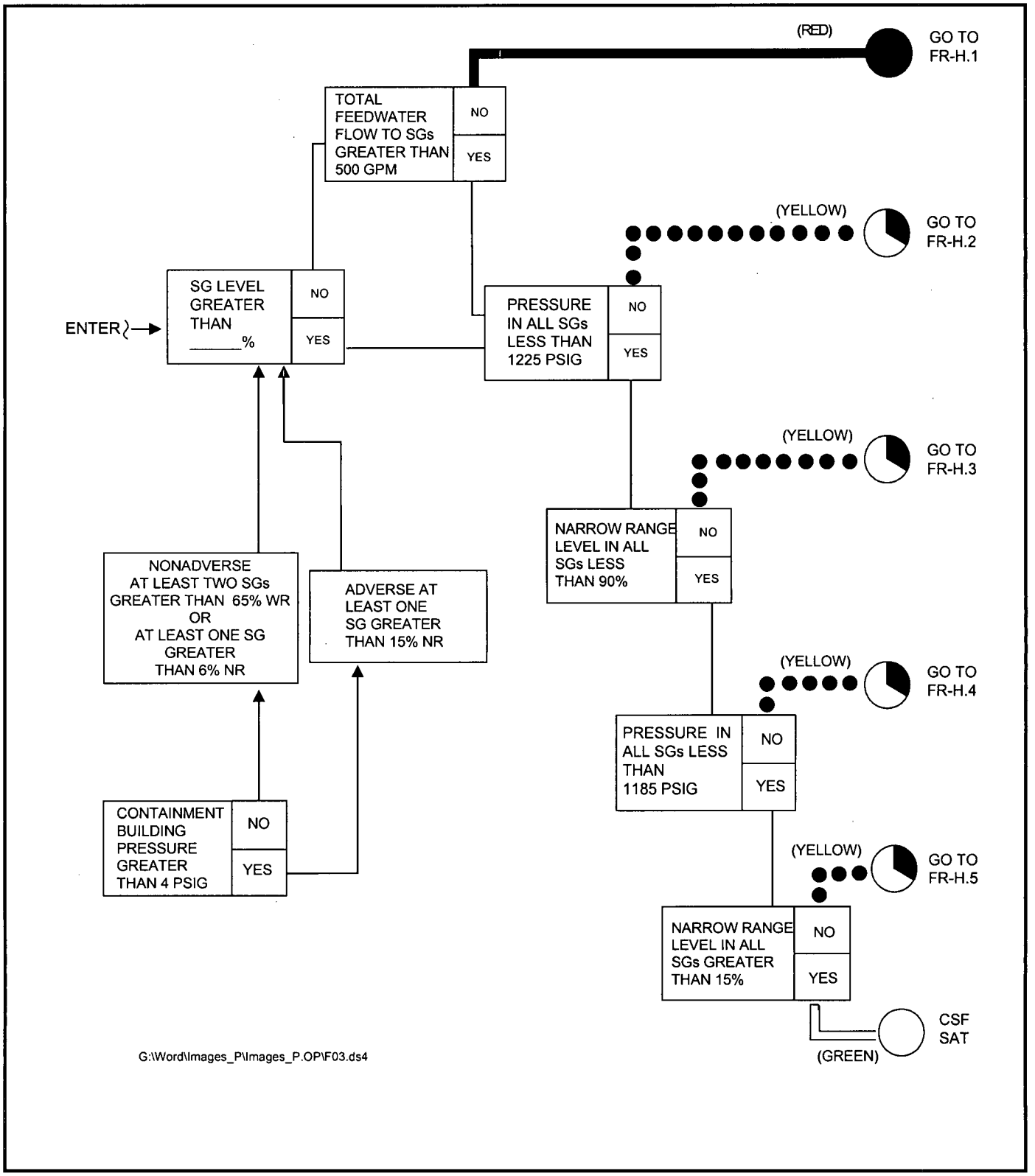

EXPIRATION DATE 07/27/08

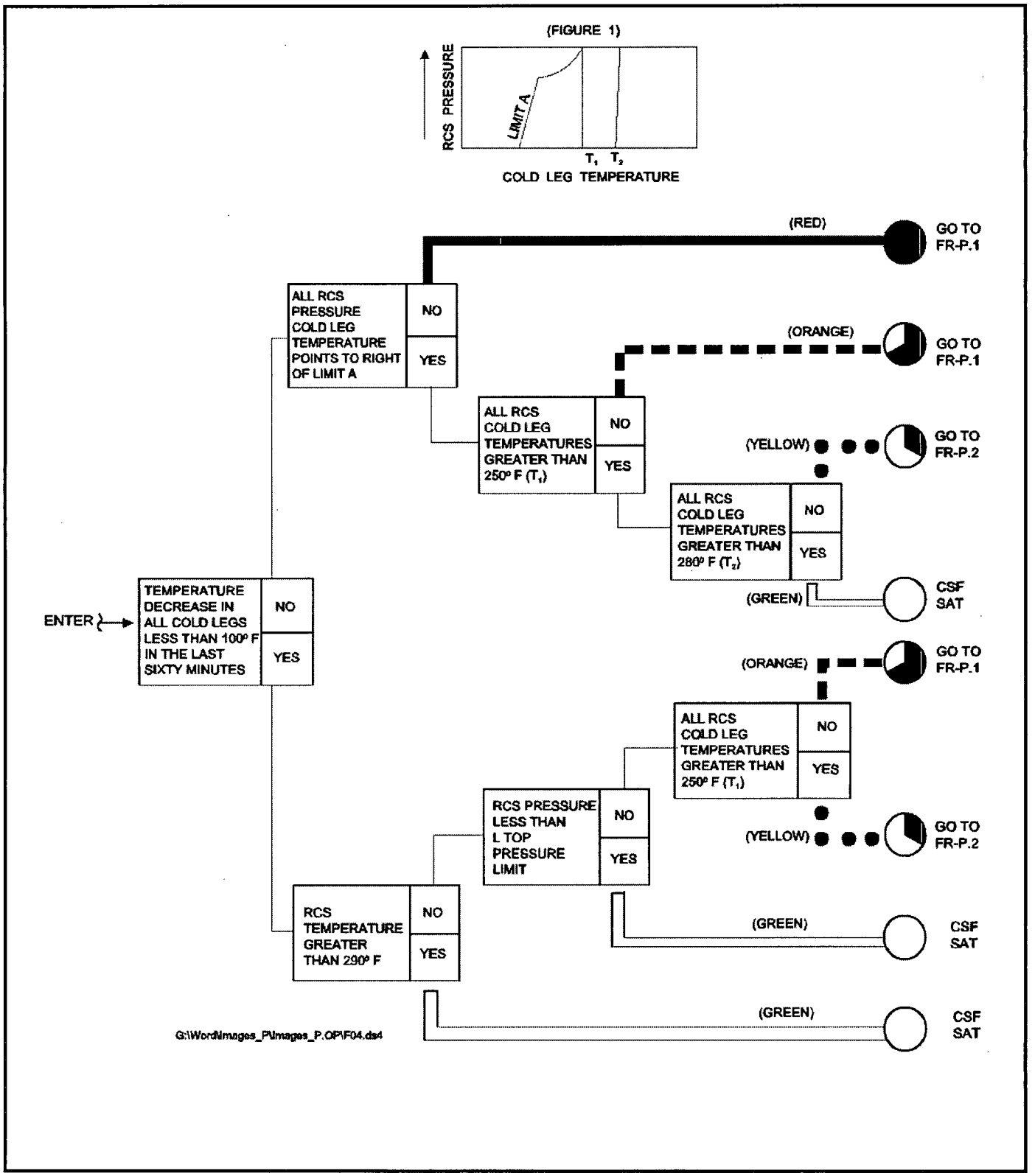

EXPIRATION DATE 07/27/08

FIGURE 1

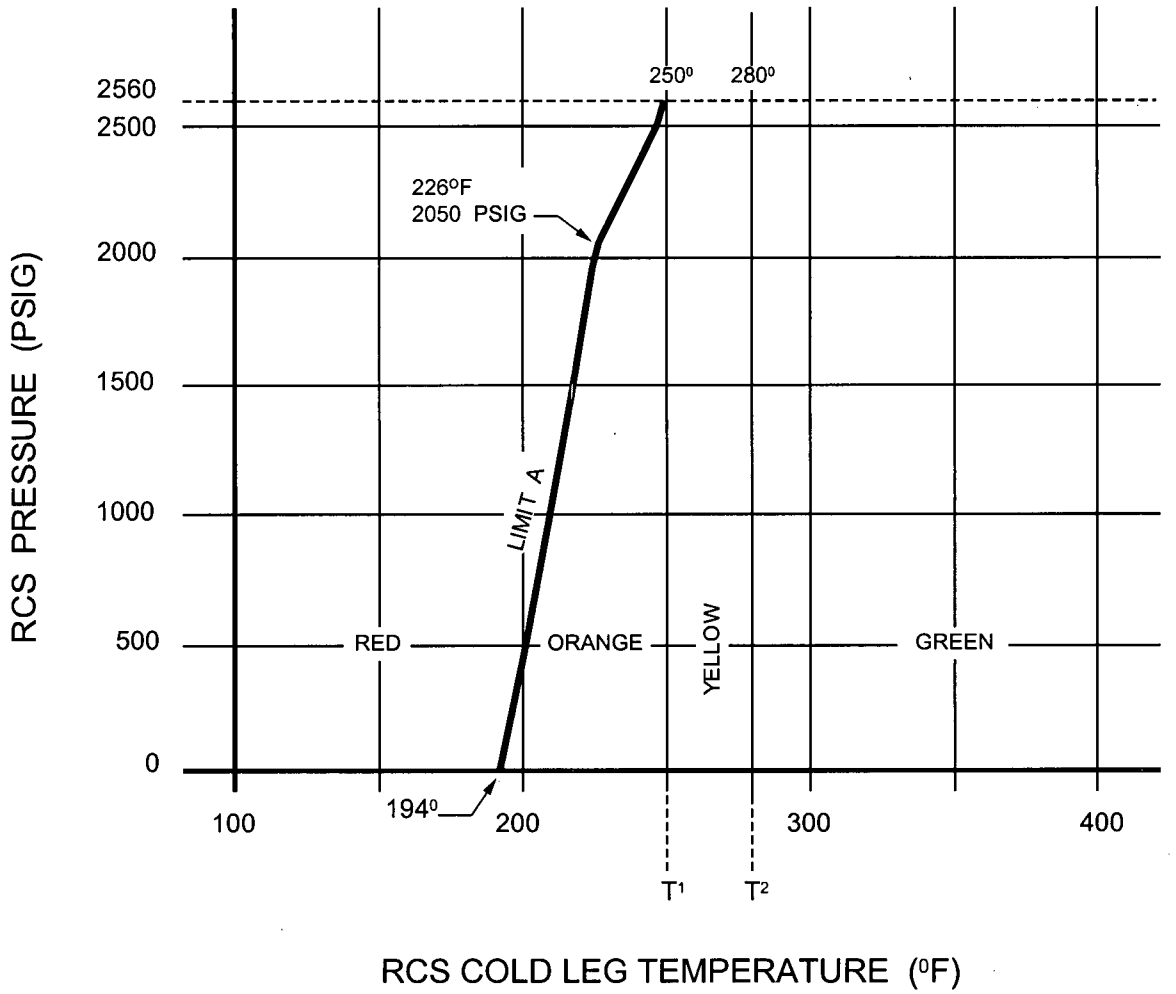

F04-1

EXPIRATION DATE 07/27/08

FIGURE 2 LTOP PRESSURE LIMITS

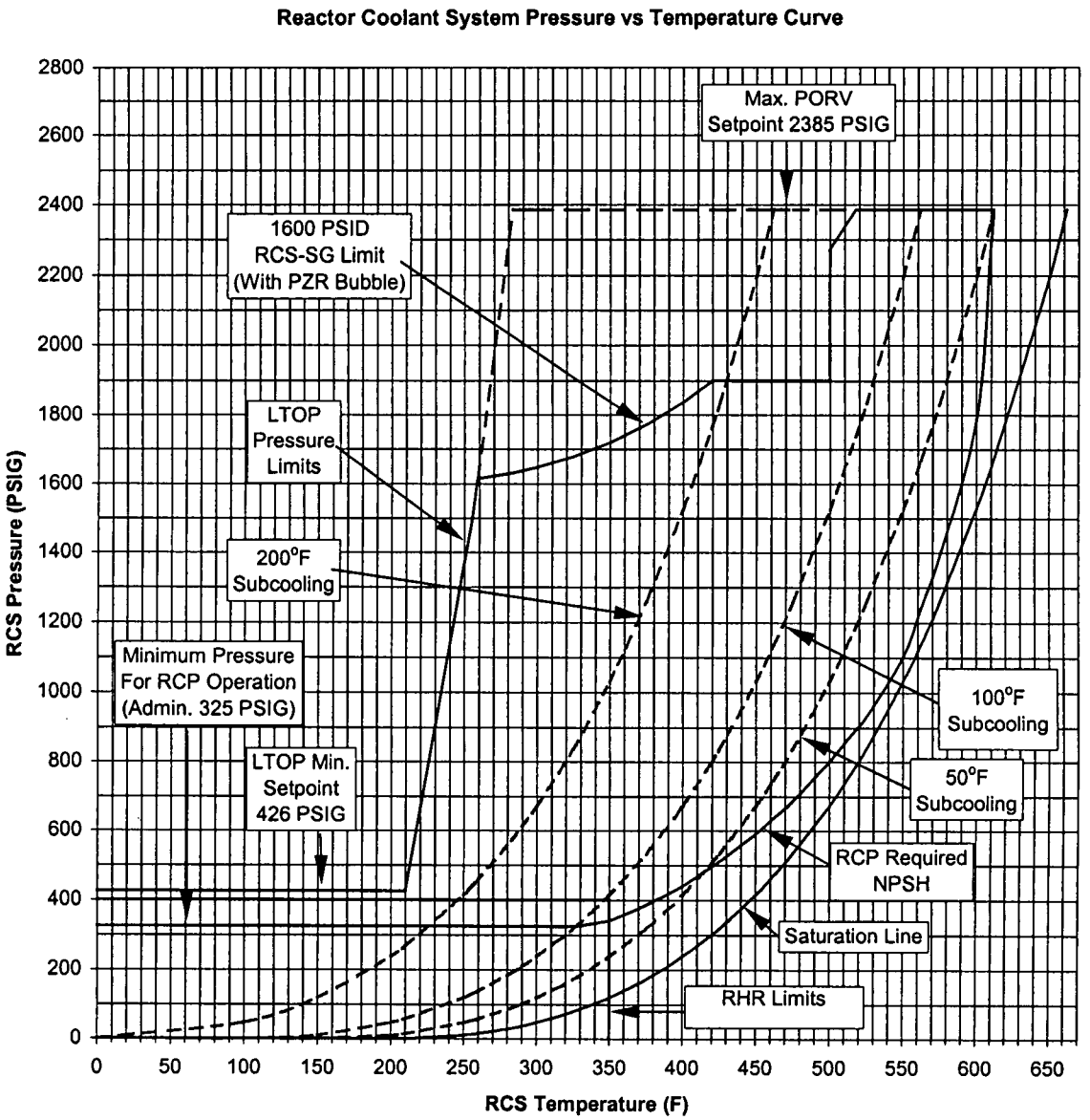

EXPIRATION DATE 07/27/08

Number	Title	Rev./Date
F-0.5	**CONTAINMENT (Z)**	**18** **07/27/06**

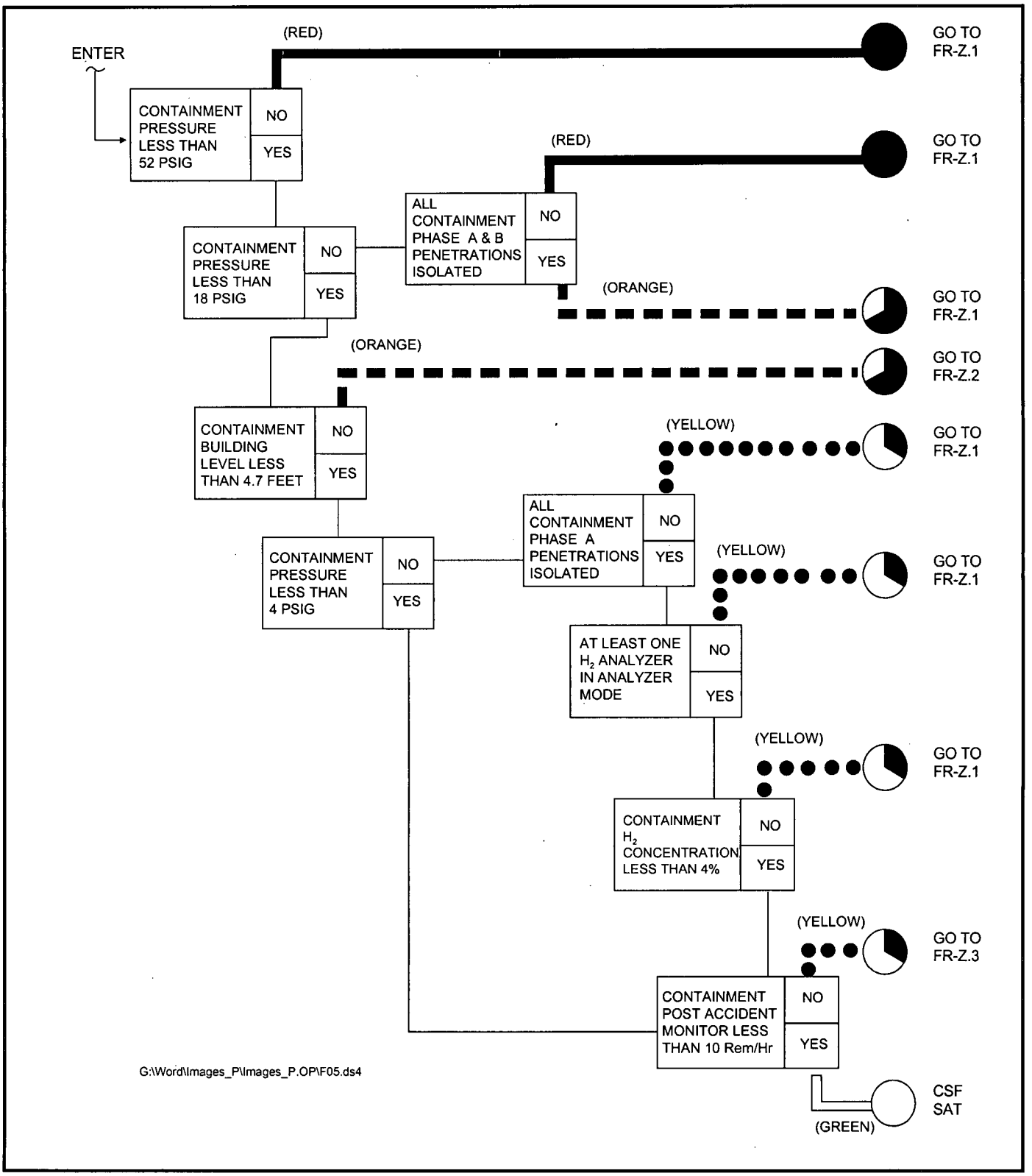

EXPIRATION DATE 07/27/08

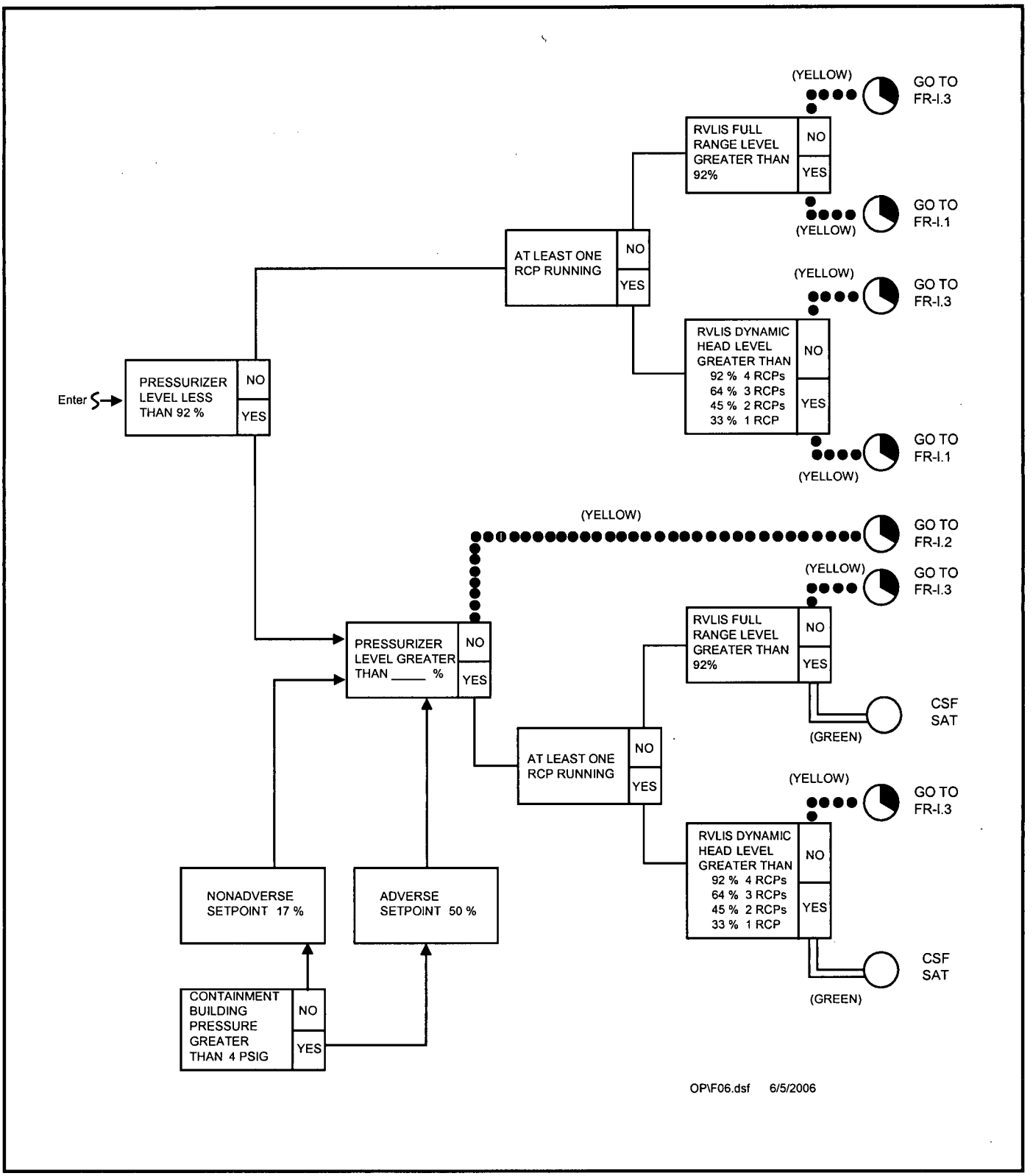

EXPIRATION DATE 07/27/08

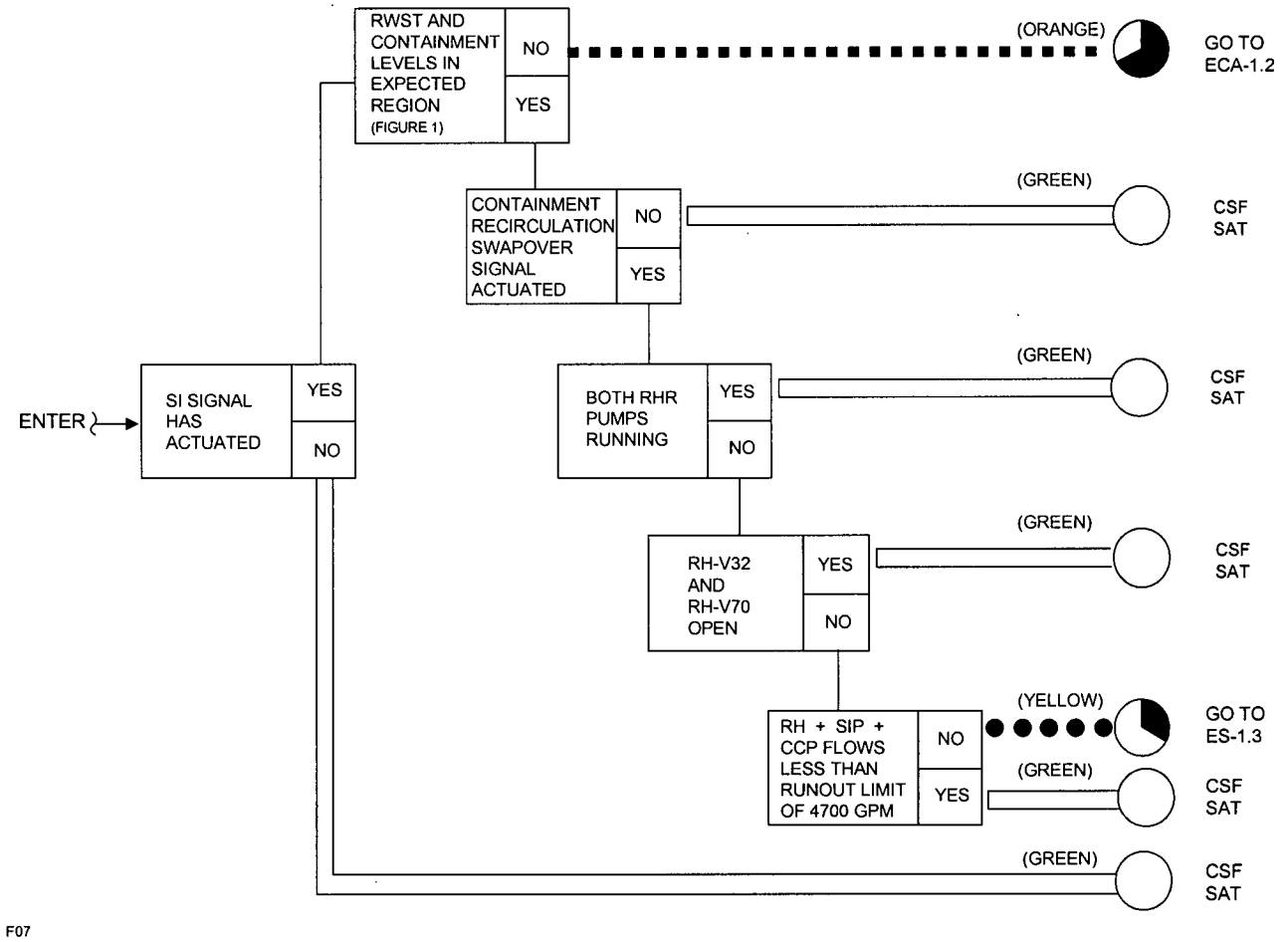

EXPIRATION DATE 07/27/08

FIGURE 1

CONTAINMENT BUILDING LEVEL vs. RWST LEVEL

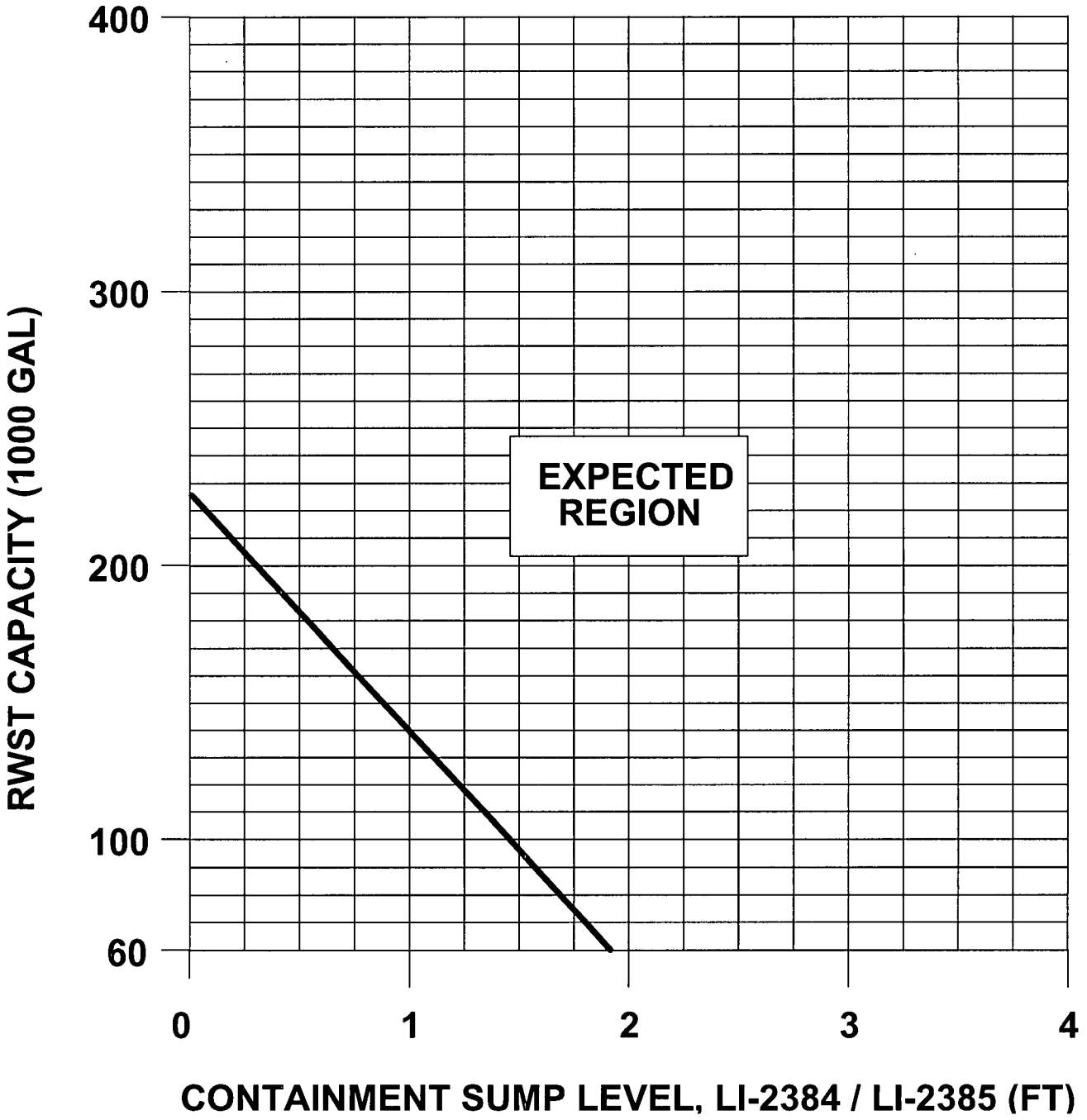

EXPIRATION DATE 07/27/08

ANY MONITOR IN HIGH ALARM (RED)

STEAM GENERATOR BLOWDOWN RADIATION

1 LM 216	S/G A	UC/ML	YES / NO
1 LM 212	S/G B	UC/ML	YES / NO
1 LM 213	S/G C	UC/ML	YES / NO
1 LM 214	S/G D	UC/ML	YES / NO

MAIN STEAM LINE RADIATION

1 GM 801	S/G A	MR/HR	YES / NO
1 GM 803	S/G B	MR/HR	YES / NO
1 GM 804	S/G C	MR/HR	YES / NO
1 GM 802	S/G D	MR/HR	YES / NO

CONDENSER RADIATION

1 GM 810 AIR EVAC CPM YES / NO

CONTAINMENT RADIATION

1 NG 110 CONTAINMENT GAS BACKUP UC/ML YES / NO

PLANT VENT DISCHARGE RATE

1 CC 225 WRGM UC/SEC YES / NO

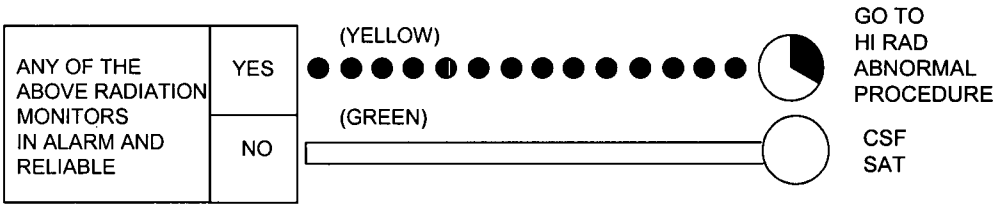

OP\F08 3/15/06

EXPIRATION DATE 07/27/08

Enclosure 6

Offsite Dose Calculation Manual (ODCM)

RMD Controlled Copy _____

PROGRAM MANUAL

Offsite Dose Calculation Manual

SORC Review: N/A (Admin. Mod.) Date: N/A

Effective Date: 4-17-07

ODCM
Rev. 31

Manual Owner:
D. A. Robinson

ABSTRACT

The Offsite Dose Calculation Manual (ODCM) contains details to implement the requirements of Technical Specifications 6.7.6g and 6.7.6h.

The Offsite Dose Calculation Manual (ODCM) is divided into two parts: (1) the Radioactive Effluent Controls Program for both in-plant radiological effluent monitoring of liquids and gases, along with the Radiological Environmental Monitoring Program (REMP) (Part A); and (2) approved methods to determine effluent monitor setpoint values and estimates of doses and radionuclide concentrations occurring beyond the boundaries of Seabrook Station resulting from normal Station operation (Part B).

The sampling and analysis requirements of the Radioactive Effluent Controls Program, specified in Part A, provide the inputs for the models of Part B in order to calculate offsite doses and radionuclide concentrations necessary to determine compliance with the dose and concentration requirements of the Station Technical Specification 6.7.6g. The REMP required by Technical Specification 6.7.6h, and as specified within this manual, provides the means to determine that measurable concentrations of radioactive materials released as a result of the operation of Seabrook Station are not significantly higher than expected.

Revisions to the ODCM require an interdisciplinary review documented on the following page as well as a SORC review prior to implementing the change. An interdisciplinary review includes as a minimum the potential impact the change has on the respective departments' programs and procedures. The interdisciplinary review shall involve the following departments: Chemistry, Radiation Protection, I&C, and Operations. The Originator shall ensure the interdisciplinary reviews are completed prior to the SORC meeting.

Interdisciplinary Review

ODCM Rev. No. _____

Sheet ____ of ____

Review Organization	Reviewed By/Date:
Originator	Date
Chemistry Manager	Date

OFFSITE DOSE CALCULATION MANUAL
(ODCM)

TABLE OF CONTENTS

CONTENT		PAGE
PART A: RADIOLOGICAL EFFLUENT CONTROL AND ENVIRONMENTAL MONITORING PROGRAMS		
1.0	INTRODUCTION	A.1-1
2.0	RESPONSIBILITIES (PART A)	A.2-1
3.0	DEFINITIONS	A.3-1
4.0	CONTROL AND APPLICABILITY	A.4-1
5.0	RADIOACTIVE EFFLUENT MONITORING INSTRUMENTATION	A.5-1
5.1	Liquids	A.5-1
5.2	Radioactive Gaseous Effluent Monitoring Instrumentation	A.5-11
6.0	RADIOACTIVE LIQUID EFFLUENTS	A.6-1
6.1	Concentration	A.6-1
6.2	Dose	A.6-9
6.3	Liquid Radwaste Treatment System	A.6-11
7.0	RADIOACTIVE GASEOUS EFFLUENTS	A.7-1
7.1	Dose Rate	A.7-1
7.2	Dose - Noble Gases	A.7-7
7.3	Dose - Iodine-131, Iodine-133, Tritium, and Radioactive Material in Particulate Form	A.7-9
7.4	Gaseous Radwaste Treatment System	A.7-11
8.0	TOTAL DOSE	A.8-1
9.0	RADIOLOGICAL ENVIRONMENTAL MONITORING	A.9-1
9.1	Monitoring Program	A.9-1
9.2	Land Use Census	A.9-11

CONTENT PAGE

9.3 Interlaboratory Comparison Program A.9-13

10.0 REPORTS A.10-1

10.1 Annual Radiological Environmental Operating Report A.10-1

10.2 Annual Radioactive Effluent Release Report A.10-2

PART B: RADIOLOGICAL CALCULATIONAL METHODS AND PARAMETERS

1.0 INTRODUCTION B.1-1

1.1 Responsibilities for Part B B.1-1

1.2 Summary of Methods, Dose Factors, Limits, Constants, Variables and Definitions B.1-2

2.0 METHOD TO CALCULATE OFF-SITE LIQUID CONCENTRATIONS B.2-1

2.1 Method to Determine F_1^{ENG} and C_1^{NG} B.2-1

2.2 Method to Determine Radionuclide Concentration for Each Liquid Effluent Source B.2-2

2.2.1 Waste Test Tanks B.2-2
2.2.2 Turbine Building Sump B.2-3
2.2.3 Steam Generator Blowdown Flash Tank B.2-3
2.2.4 Primary Component Cooling Water (PCCW) System B.2-3
2.2.5 Water Treatment System (Condensate Polishing System) B.2-3

3.0 OFF-SITE DOSE CALCULATION METHODS B.3-1

3.1 Introductory Concepts B.3-2

3.2 Method to Calculate the Total Body Dose from Liquid Releases B.3-4

3.2.1 Method I B.3-4
3.2.2 Method II B.3-5

3.3 Method to Calculate Maximum Organ Dose from Liquid Releases B.3-6

3.3.1 Method I B.3-6
3.3.2 Method II B.3-7

3.4 Method to Calculate the Total Body Dose Rate from Noble Gases B.3-8

3.4.1 Method I B.3-8
3.4.2 Method II B.3-10

CONTENT PAGE

3.5 Method to Calculate the Skin Dose Rate from Noble Gases B.3-11

3.5.1 Method I B.3-11
3.5.2 Method II B.3-14

3.6 Method to Calculate the Critical Organ Dose Rate from Iodines, Tritium and Particulates with $T_{1/2}$ Greater than 8 Days B.3-15

3.6.1 Method I B.3-15
3.6.2 Method II B.3-18

3.7 Method to Calculate the Gamma Air Dose from Noble Gases B.3-19

3.7.1 Method I B.3-19
3.7.2 Method II B.3-21

3.8 Method to Calculate the Beta Air Dose from Noble Gases B.3-22

3.8.1 Method I B.3-22
3.8.2 Method II B.3-24

3.9 Method to Calculate the Critical Organ Dose from Iodines, Tritium and Particulates B.3-25

3.9.1 Method I B.3-25
3.9.2 Method II B.3-27

3.10 Method to Calculate Direct Dose from Plant Operation B.3-28

3.10.1 Method B.3-28

3.11 Dose Projections B.3-29

3.11.1 Liquid Dose Projections B.3-29
3.11.2 Gaseous Dose Projections B.3-30

3.12 Method to Calculate Total Dose from Plant Operations B.3-34

3.12.1 Method B.3-34

4.0 RADIOLOGICAL ENVIRONMENTAL MONITORING PROGRAM B.4-1

5.0 SETPOINT DETERMINATIONS B.5-1

5.1 Liquid Effluent Instrumentation Setpoints B.5-1

5.1.1 Liquid Waste Test Tank Monitor (RM-6509) B.5-1

CONTENT PAGE

5.1.1.1 Method to Determine the Setpoint of the Liquid Waste Test Tank Monitor (RM-6509) B.5-1

5.1.1.2 Liquid Waste Test Tank Monitor Setpoint Example B.5-5

5.1.2 Turbine Building Drains Liquid Effluent Monitor (RM-6521) B.5-6
5.1.3 Steam Generator Blowdown Liquid Sample Monitor (RM-6519) B.5-7
5.1.4 PCCW Head Tank Rate-of-Change Alarm Setpoint B.5-8
5.1.5 PCCW Radiation Monitor B.5-9
5.1.6 Water Treatment Liquid Effluent (CPS Rad Monitor RM-6473) B.5-9

5.2 Gaseous Effluent Instrumentation Setpoints B.5-10

5.2.1 Plant Vent Wide-Range Gas Monitors (RM-6528-1, 2 and 3) B.5-10

5.2.1.1 Method to Determine the Setpoint of the Plant Vent Wide Range Gas Monitors (RM-6528-1, 2 and 3) B.5-10

5.2.1.2 Plant Vent Wide Range Gas Monitor Setpoint Example for Limiting Case B.5-12

5.2.2 Waste Gas System Monitors (RM-6504 and RM-6503) B.5-15
5.2.3 Main Condenser Air Evacuation Monitor (RM-6505) B.5-15

6.0 LIQUID AND GASEOUS EFFLUENT STREAMS, RADIATION MONITORS AND RADWASTE TREATMENT SYSTEMS B.6-1

7.0 BASES FOR DOSE CALCULATION METHODS B.7-1

7.1 Liquid Release Dose Calculations B.7-1

7.1.1 Dose to the Total Body B.7-4
7.1.2 Dose to the Critical Organ B.7-4

7.2 Gaseous Release Dose Calculations B.7-7

7.2.1 Total Body Dose Rate from Noble Gases B.7-7
7.2.2 Skin Dose Rate from Noble Gases B.7-8
7.2.3 Critical Organ Dose Rate from Iodines, Tritium and Particulates with Half-Lives Greater Than Eight Days B.7-11
7.2.4 Gamma Dose to Air from Noble Gases B.7-13
7.2.5 Beta Dose to Air from Noble Gases B.7-14
7.2.6 Dose to Critical Organ from Iodines, Tritium and Particulates with Half-Lives Greater Than Eight Days B.7-16
7.2.7 Special Receptor Gaseous Release Dose Calculations B.7-18

7.2.7.1 Total Body Dose Rate from Noble Gases B.7-18

7.2.7.2 Skin Dose Rate from Noble Gases B.7-20

CONTENT PAGE

7.2.7.3 Critical Organ Dose Rate from Iodines, Tritium and Particulates with Half-Lives Greater Than Eight Days B.7-21

7.2.7.4 Gamma Dose to Air from Noble Gases B.7-22

7.2.7.5 Beta Dose to Air from Noble Gases B.7-23

7.2.7.6 Critical Organ Dose from Iodines, Tritium and Particulates with Half-Lives Greater Than Eight Days B.7-25

7.3 Receptor Points and Average Atmospheric Dispersion Factors for Important Exposure Pathways B.7-30

7.3.1 Receptor Locations B.7-30
7.3.2 Seabrook Station Atmospheric Dispersion Model B.7-30
7.3.3 Average Atmospheric Dispersion Factors for Receptors B.7-31

8.0 BASES FOR LIQUID AND GASEOUS MONITOR SETPOINTS B.8-1

8.1 Basis for the Liquid Waste Test Tank Monitor Setpoint B.8-1

8.2 Basis for the Plant Vent Wide Range Gas Monitor Setpoints B.8-5

8.3 Basis for PCCW Head Tank Rate-of-Change Alarm Setpoint B.8-10

8.4 Basis for Waste Gas Processing System Monitors (RM-6504 and RM-6503) B.8-11

8.5 Basis for the Main Condenser Air Evacuation Monitor Setpoint (RM-6505) B.8-13

8.5.1 Limiting Example for the Air Evacuation Monitor Setpoint During Normal Operations B.8-13

8.5.2 Example for the Air Evacuation Monitor Setpoint During Start Up (Hogging Mode) B.8-15

References R-1

Appendix A: Dose Conversion Factors A-1

Appendix B: Annual Average Effluent Concentration Limits Taken From 10 CFR 20, Appendix B B-1

Appendix C: EMS Software Documentation C-1

LIST OF TABLES AND FIGURES

PART A TABLES

A.5.1-1	Radioactive Liquid Effluent Monitoring Instrumentation	A.5-5
A.5.1-2	Radioactive Liquid Effluent Monitoring Instrumentation Surveillance Requirements	A.5-8
A.5.2-1	Radioactive Gaseous Effluent Monitoring Instrumentation	A.5-17
A.5.2-2	Radioactive Gaseous Effluent Monitoring Instrumentation Surveillance Requirements	A.5-19
A.6.1-1	Radioactive Liquid Waste Sampling and Analysis Program	A.6-3
A.7.1-1	Radioactive Gaseous Waste Sampling and Analysis Program	A.7-3
A.9.1-1	Radiological Environmental Monitoring Program	A.9-3
A.9.1-2	Detection Capabilities for Environmental Sample Analysis	A.9-7
A.9.1-3	Reporting Levels for Radioactivity Concentrations in Environmental Samples	A.9-10

PART B TABLES

B.1-1	Summary of Radiological Effluent Part A Controls and Implementing Equations	B.1-3
B.1-2	Summary of Method I Equations to Calculate Unrestricted Area Liquid Concentrations	B.1-6
B.1-3	Summary of Method I Equations to Calculate Off-Site Doses from Liquid Releases	B.1-7
B.1-4	Summary of Method I Equations to Calculate Dose Rates	B.1-8
B.1-5	Summary of Method I Equations to Calculate Doses to Air from Noble Gases	B.1-11
B.1-6	Summary of Method I Equations to Calculate Dose to an Individual from Tritium, Iodine and Particulates	B.1-13
B.1-7	Summary of Methods for Setpoint Determinations	B.1-14
B.1-8	Summary of Variables	B.1-15
B.1-9	Definition of Terms	B.1-22

CONTENT PAGE

B.1-10	Dose Factors Specific for Seabrook Station for Noble Gas Releases	B.1-23
B.1-11	Dose Factors Specific for Seabrook Station for Liquid Releases	B.1-24
B.1-12	Dose and Dose Rate Factors Specific for Seabrook Station for Iodines, Tritium and Particulate Releases	B.1-25
B.1-13	Combined Skin Dose Rate Factors Specific for Seabrook Station Special Receptors for Noble Gas Release	B.1-26
B.1-14	Dose and Dose Rate Factors Specific for the Science and Nature Center for Iodine, Tritium, and Particulate Releases	B.1-27
B.1-15	Dose and Dose Rate Factors Specific for the "Rocks" for Iodine, Tritium, and Particulate Releases	B.1-28
B.4-1	Radiological Environmental Monitoring Stations	B.4-2
B.7-1	Usage Factors for Various Liquid Pathways at Seabrook Station	B.7-6
B.7-2	Environmental Parameters for Gaseous Effluents at Seabrook Station	B.7-27
B.7-3	Usage Factors for Various Gaseous Pathways at Seabrook Station	B.7-29
B.7-4	Seabrook Station Long-Term Average Dispersion Factors* Primary Vent Stack	B.7-33
B.7-5	Seabrook Station Long-Term Average Dispersion Factors for Special (On-Site) Receptors Primary Vent Stack	B.7-34
B.7-6	Seabrook Station Long-Term Atmospheric Diffusion and Deposition Factors Ground-Level Release Pathway	B.7-35

PART B FIGURES

B.4-1	Radiological Environmental Monitoring Locations within 4 Kilometers of Seabrook Station	B.4-6
B.4-2	Radiological Environmental Monitoring Locations Between 4 Kilometers and 12 Kilometers from Seabrook Station	B.4-7
B.4-3	Radiological Environmental Monitoring Locations Outside 12 Kilometers of Seabrook Station	B.4-8
B.4-4	Direct Radiation Monitoring Locations within 4 Kilometers of Seabrook Station	B.4-9
B.4-5	Direct Radiation Monitoring Locations Between 4 Kilometers and 12 Kilometers from Seabrook Station	B.4-10

CONTENT PAGE

B.4-6	Direct Radiation Monitoring Locations Outside 12 Kilometers of Seabrook Station	B.4-11
B.6-1	Liquid Effluent Streams, Radiation Monitors, and Radwaste Treatment System at Seabrook Station	B.6-2
B.6-2	Gaseous Effluent Streams, Radiation Monitors, and Radwaste Treatment System at Seabrook Station	B.6-3

LIST OF EFFECTIVE PAGES

PAGE	REV.	PAGE	REV.	PAGE	REV.
Cover	31	R-1	21		
Abstract 1&2	30	A-1 thur A-15	21		
TOC 1 - 8	31	B-1 thru B-52	25		
LOEP 1	31				
		C-1	22		
A.1-1	29	C-2	22		
		C-3	16		
A.2-1	24	C-4	16		
		C-5	16		
A.3-1	24	C-6	22		
A.4-1 thru A.4-4	25				
A.5-1 thru A.5-20	31				
A.6-1 thru A.6-12	28				
A.7-1 thru A.7-12	25				
A.8-1	24				
A.8-2	24				
A.9-1 thru A.9-13	30				
A.10-1 thru A.10-3	29				
B.1-0 thru B.1-28	28				
B.2-1 thru B.2-3	28				
B.3-1 thru B.3-34	25				
B.4-1 thru B.4-11	30				
B.5-1 thru B.5-18	28				
B.6-1 thru B.6-3	28				
B.7-1 thru B.7-35	24				
B.8-1 thru B.8-18	28				

PART A

RADIOLOGICAL EFFLUENT CONTROL AND ENVIRONMENTAL MONITORING PROGRAMS

1.0 INTRODUCTION

The Offsite Dose Calculation Manual (ODCM) contains details to implement the Radioactive Effluent Controls and Environmental Monitoring Programs" of Technical Specifications 6.7.6g and 6.7.6h.

The purpose of this manual is to contain details for the implementation of the Radioactive Effluent Technical Requirement Program (RETRP) and the Radiological Environmental Monitoring Program (REMP). These programs are required by Technical Specifications 6.7.6g and 6.7.6h.

Part A of this manual defines specific concentrations, sampling regimes and frequencies for both the RETRP and the REMP. These activities are the defined surveillances for radiological releases. Part A also defines specific sampling locations for the RETRP. The information contained in Part A is used as input into the models that are used in Part B. The Part B models identify the calculational methods for determining radiation monitor setpoints, offsite doses and effluent concentrations of radionuclides. Part B also defines sampling locations for the REMP. The data resulting from the surveillance and monitoring programs described in Part A provide a means to confirm that concentrations of radioactive material released, as a result of routine Seabrook Station operations, do not contribute to effluent dose significantly different than as postulated in Part B.

The ODCM Parts A and B containing guidance for handling (sampling and monitoring) Condensate Polisher System Effluent discharges (Neutralization Tank, Low Conductivity Tank, and Resin Megarinses) do not apply until the Polisher is declared operable and processing of Condensate through the demineralizer resin occurs.

An ODCM Surveillance Requirement may be considered met if surveillance is performed within 1.25 times the stated surveillance interval. This 25% extension facilitates surveillance scheduling and considers plant operating conditions that may not be suitable for conducting the surveillance test. This provision is not intended to be used repeatedly merely as an operational convenience to extend surveillance intervals beyond those specified.

2.0 RESPONSIBILITIES (PART A)

All changes to the ODCM shall be reviewed by the Station Operation Review Committee (SORC), approved by the Station Director, and documented per Administrative Control 6.13 of the Technical Specifications. The change process is controlled by the Applicability Determination Process as controlled by the 10 CFR 50.59 Resource Manual (5059RM). Changes made to Part A shall be submitted to the NRC for its information in the Annual Radioactive Effluent Release Report for the period in which the change(s) was made effective, pursuant to T.S. 6.13.

It shall be the responsibility of the Station Director to ensure that the ODCM is used in the performance of the Radioactive Effluent Control and Environmental Monitoring Program implementation requirements, as identified under Administrative Controls 6.7.6g and 6.7.6h of the Technical Specifications.

3.0 DEFINITIONS

The defined terms of this section appear in capitalized type and are applicable throughout these Controls. Terms used in these Controls and not defined herein have the same definition as listed in the Technical Specifications.

4.0 CONTROL AND APPLICABILITY

This section provides a summary listing of the Controls and Applicability requirements of the ODCM.

The RECP conforms with 10 CFR 50.36a for the control of radioactive effluents and for maintaining the doses to MEMBERS OF THE PUBLIC from radioactive effluents as low as reasonably achievable. The REMP provides for monitoring the radiation and radionuclides in the environs of the plant.

The specific implementation details for the RECP and REMP are located in the OFFSITE DOSE CALCULATION MANUAL (ODCM). Contained within the ODCM are the following CONTROLS:

C.5.1 - RADIOACTIVE EFFLUENT MONITORING INSTRUMENTATION – LIQUIDS

CONTROL - At All Times

The radioactive liquid effluent monitoring instrumentation channels shown in Table A.5.1-1 shall be OPERABLE with their Alarm/Trip Setpoints set to ensure that the limits of Control C.6.1.1 are not exceeded. The Alarm/Trip Setpoints of these channels shall be determined and adjusted in accordance with the methodology and parameters in the OFFSITE DOSE CALCULATION MANUAL (ODCM), Part B.

C.5.2 - RADIOACTIVE GASEOUS EFFLUENT MONITORING INSTRUMENTATION

CONTROL- As Shown on ODCM Table A.5.2-1

The radioactive gaseous effluent monitoring instrumentation channels shown in Table A.5.2-1 shall be OPERABLE with their Alarm/Trip Setpoints set to ensure that the limits of Control C.7.1.1 are not exceeded. The Alarm/Trip Setpoints of these channels meeting Control C.7.1.1 shall be determined and adjusted in accordance with the methodology and parameters in the ODCM (Part B).

C.6.1.1 - RADIOACTIVE LIQUID EFFLUENTS – CONCENTRATION

CONTROL - At All Times

The concentration of radioactive material released in liquid effluents at the point of discharge from the multiport diffuser (see Technical Specifications Figure 5.1-3) shall be limited to the concentrations specified in 10 CFR Part 20, Appendix B, Table 2, Column 2, for radionuclides other than dissolved or entrained noble gases. For dissolved or entrained noble gases, the concentration shall be limited to 2×10^{-4} microCurie/ml total activity.

C.6.2.1 – DOSE

CONTROL – At All Times

The dose or dose commitment to a MEMBER OF THE PUBLIC from radioactive materials in liquid effluents released, from each unit, to UNRESTRICTED AREAS (see Technical Specification Figure 5.1-3) shall be limited

- During any calendar quarter to less than or equal to 1.5 mrems to the whole body and to less than or equal to 5 mrems to any organ, and
- During any calendar year to less than or equal to 3 mrems to the whole body and to less than or equal to 10 mrems to any organ.

C.6.3.1 – LIQUID RADWASTE TREATMENT SYSTEM

CONTROL – At All Times

The Liquid Radwaste Treatment System shall be OPERABLE and appropriate portions of the system shall be used to reduce releases of radioactivity when the projected doses due to the liquid effluent to UNRESTRICTED AREAS (see Technical Specification Figure 5.1-3) would exceed 0.06 mrem to the whole body or 0.2 mrem to any organ in a 31-day period.

C.7.1.1 – RADIOACTIVE GASEOUS EFFLUENTS – DOSE RATE

CONTROL - At All Times

The dose rate due to radioactive materials released in gaseous effluents from the site to areas at and beyond the SITE BOUNDARY (see Technical Specification Figure 5.1-1) shall be limited to the following:

- For noble gases: Less than or equal to 500 mrems/yr to the whole body and less than or equal to 3000 mrems/yr to the skin, and
- For Iodine-131, for Iodine-133, for tritium, and for all radionuclides in particulate form with half-lives greater than 8 days: Less than or equal to 1500 mrems/yr to any organ.

C.7.2.1 – DOSE – NOBLE GASES

CONTROL - At All Times

The air dose due to noble gases released in gaseous effluents to areas at and beyond the SITE BOUNDARY (see Technical Specification Figure 5.1-1) shall be limited to the following:

- During any calendar quarter: Less than or equal to 5 mrads for gamma radiation and less than or equal to 10 mrads for beta radiation, and
- During any calendar year: Less than or equal to 10 mrads for gamma radiation and less than or equal to 20 mrads for beta radiation.

C.7.3.1 – DOSE – IODINE-131, TRITIUM, AND RADIOACTIVE MATERIAL IN PARTICULATE FORM

CONTROL- At All Times

The dose to a MEMBER OF THE PUBLIC from Iodine-131, Iodine-133, tritium, and all radionuclides in particulate form with half-lives greater than 8 days in gaseous effluents released to areas at and beyond the SITE BOUNDARY (see Technical Specification Figure 5.1-1) shall be limited to the following:

- During any calendar quarter: Less than or equal to 7.5 mrems to any organ, and
- During any calendar year: Less than or equal to 15 mrems to any organ.

C.7.4.1 - GASEOUS RADWASTE TREATMENT SYSTEM

CONTROL – At All Times

The VENTILATION EXHAUST TREATMENT SYSTEM and the GASEOUS RADWASTE TREATMENT SYSTEM shall be OPERABLE and appropriate portions of these system shall be used to reduce releases of radioactivity when the projected doses in 31 days due to gaseous effluent releases to areas at and beyond the SITE BOUNDARY (see Technical Specification Figure 5.1-1) would exceed

- 0.2 mrad to air from gamma radiation, or
- 0.4 mrad to air from beta radiation, or
- 0.3 mrem to any organ of a MEMBER OF THE PUBLIC.

C.8.1.1 - TOTAL DOSE

CONTROL- At All Times

The annual (calendar year) dose or dose commitment to any MEMBER OF THE PUBLIC due to releases of radioactivity and to radiation from uranium fuel cycle sources shall be limited to less than or equal to 25 mrems to the whole body or any organ, except the thyroid, which shall be limited to less than or equal to 75 mrems.

C.9.1.1 - RADIOLOGICAL ENVIRONMENTAL MONITORING – MONITORING PROGRAM

CONTROL – At All Times

The Radiological Environmental Monitoring Program (REMP) shall be conducted as specified in Table A.9.1-1.

C.9.2.1 – LAND USE CENSUS

CONTROL - At All Times

A Land Use Census shall be conducted and shall identify within a distance of 8 km (5 miles) the location in each of the 16 meteorological sectors of the nearest milk animal, the nearest residence, and the nearest garden** of greater than 50 m^2 (500 ft^2) producing broad leaf vegetation.

C.9.3.1 – INTERLABORATORY COMPARISON PROGRAM

CONTROL - At All Times

In accordance with Technical Specification 6.7.6.h.3, analyses shall be performed on all radioactive materials supplied as part of an Interlaboratory Comparison Program, that has been approved by the Commission, that correspond to samples required by REMP.

**Broad leaf vegetation sampling of at least three different kinds of vegetation may be performed at the SITE BOUNDARY in each of two different direction sectors with the highest predicted relative deposition values (D/Qs) in lieu of the garden census. Specifications for broad leaf vegetation sampling in the REMP shall be followed, including analysis of control samples.

5.0 RADIOACTIVE EFFLUENT MONITORING INSTRUMENTATION

5.1 Liquids

CONTROLS

C.5.1 The radioactive liquid effluent monitoring instrumentation channels shown in Table A.5.1-1 shall be OPERABLE with their Alarm/Trip Setpoints set to ensure that the limits of Control C.6.1.1 are not exceeded. The Alarm/Trip Setpoints of these channels shall be determined and adjusted in accordance with the methodology and parameters in the OFFSITE DOSE CALCULATION MANUAL (ODCM), Part B.

APPLICABILITY: At all times.

ACTION:

a. With a radioactive liquid effluent monitoring instrumentation channel Alarm/Trip Setpoint less conservative than required by the above specification, immediately suspend the release of radioactive liquid effluents monitored by the affected channel, or declare the channel inoperable.

b. With less than the minimum number of radioactive liquid effluent monitoring instrumentation channels OPERABLE, take the ACTION shown in Table A.5.1-1. Restore the inoperable instrumentation to OPERABLE status within a time period determined by an evaluation conducted in accordance with the requirements of the Corrective Action Program. An evaluation is not required if the noncompliance is a consequence of surveillance testing or planned maintenance.

SURVEILLANCE REQUIREMENTS

S.5.1 Each radioactive liquid effluent monitoring instrumentation channel shall be demonstrated OPERABLE by performance of the CHANNEL CHECK, SOURCE CHECK, CHANNEL CALIBRATION, and CHANNEL OPERATIONAL TEST at the frequencies shown in Table A.5.1-2.

BASES

The radioactive liquid effluent instrumentation is provided to monitor and control, as applicable, the releases of radioactive materials in liquid effluents during actual or potential releases of liquid effluents. The Alarm/Trip Setpoints for these instruments shall be calculated and adjusted in accordance with the methodology and parameters in the ODCM to ensure that the alarm/trip will occur prior to exceeding the limits of 10 CFR Part 20. The OPERABILITY and use of this instrumentation is consistent with the requirements of General Design Criteria 60, 63, and 64 of Appendix A to 10 CFR Part 50.

Table A.5.1-2 Item 3a of Control C.5.1 requires that a Channel Operational Test be performed on the radioactivity monitors (RM-R-6515 and RM-R-6516) for the PCCW System. This channel operational test is a digital channel operational test and requires that it shall demonstrate automatic isolation of the pathway and control room alarm annunciation.

For Seabrook Station, these two radioactivity monitoring channels provide control room annunciation, but do not provide automatic isolation of the release pathway. This particular item was discussed in detail with the NRC staff reviewers. For this particular reason, the words "But Not Termination of Release" were added to Item 3 of Table A.5.1-2. The purpose of adding the above words to Item 3 was to preclude the addition of another Table Notation to Table A.5.1-2. Therefore, the channel operational test for these monitors only requires that they provide control room alarm annunciation.

The CHANNEL CHECK for Flow Rate Measurement Devices (Table A.5.1-2, items 2.a., 2.b. and 2.d.) is required "at least once per 24 hours on **days when continuous, periodic, or batch releases are made.**" Additionally, ACTION 31 of Table A.5.1-1 is only applicable during actual releases.

Based on the above requirements, these instruments are only required to be OPERABLE during actual releases. Therefore, the CHANNEL CHECK is only required during periods when continuous, periodic, or batch releases are being made.

The Primary Component Cooling Water (PCCW) System is monitored by radiation monitors, which are required by Technical Specifications 3.3.3.1 and ODCM C.5.1 to be OPERABLE, or sampling of the PCCW and Service Water (SW) Systems is required. Clarification of this requirement needs to be made for certain PCCW System conditions. Below is a list of 3 conditions and their corresponding requirements.

1) If the PCCW System is shut down but not drained, grab samples shall be taken of PCCW and SW, as required in Technical Specification Table 3.3-6, Items 6a and 6b (Action 28).

2) During transition times when the PCCW system is in the process of being drained, grab samples, as required by Technical Specification Table 3.3-6 and ODCM C.5.1, shall be taken until such time as sampling of PCCW is no longer possible. At this time neither PCCW nor SW need to be sampled. During transition times when the PCCW system is being filled, the taking of grab samples shall commence as soon as physically possible and continue in accordance with the requirements of Technical Specifications 3.3.3.1 and ODCM C.5.1 until PCCW is in service, the pumps are operating, and monitors are operable.

3) When PCCW is drained, there are no sampling requirements.

The above statements are consistent with the Technical Specification definition of OPERABILITY and with the Bases for Technical Specification 3.3.3.1.

The following actions are required when the Service Water side of the Primary Component Cooling Water (PCCW) Heat Exchanger is drained and grab samples of the Service Water System are required:

a. Grab samples from the Service Water System will be obtained at the frequencies specified in Technical Specification 3.3.3.1 and ODCM C.5.1 as the Service Water System is being drained until obtaining these samples is not physically possible.

b. Grab samples are not required once the Service Water System is drained such that it is not physically possible to obtain the samples.

c. When refilling the Service Water System, grab samples shall resume as soon as physically possible, at the intervals specified in the aforementioned sources, and continue until the PCCW radiation monitors (1-RM-6515 and 1-RM-6516) are OPERABLE.

Sampling of the PCCW system with the Service Water system drained and the PCCW system in operation shall continue per the requirements of Technical Specification 3.3.3.1 and this Control.

The purpose of the plant radiation monitors is to sense radiation levels in selected plant systems and locations and determine whether or not predetermined limits are being exceeded. In the case of the Primary Component Cooling Water (PCCW) loops, the radiation monitors (1-RM-6515 and 1-RM-6516) sense radiation in the PCCW system which could leak into the Service Water System and be discharged to the environment via the multiport diffuser. Per Control C.6.1.1, the concentration of radioactive material released in liquid effluents at the point of discharge from the multiport diffuser must be within specified limits. This limitation provides assurance that the levels of radioactive materials in unrestricted areas will not pose a threat to the health and safety of the public.

Based on the importance of maintaining radioactive effluent releases within limits that guarantee the health and safety of the public will not be at risk, the PCCW radiation monitors are required to be in operation at all times. When a radiation monitor is inoperable, grab samples from the PCCW and Service Water systems must be obtained and analyzed as a compensatory measure in accordance with Technical Specification 3.3.3.1, Table 3.3-6 Action 28 and this Control. If the service water system is drained, there is no potential for inadvertent radioactive liquid effluent release through the service water system to the environment via the multiport diffuser. Thus, when the system is drained there is no need to obtain the grab sample. However, when the system is being filled, grab samples must be obtained as soon as possible to ensure that the water discharged to the environment is in compliance with Control C.6.1.1.

The purpose of the PCCW monitors is to detect radioactivity indicative of a leak from the Reactor Coolant System or from one of the other radioactive systems which exchange with the PCCW System. These monitors are required to be operable at all times. Grab samples of PCCW are required when the PCCW monitors are not operable. Since the purpose of obtaining the PCCW samples is to provide an indication of a leak of radioactive liquid into the PCCW system, draining of the Service Water system does not remove the reason for obtaining the PCCW grab samples. These samples shall be obtained as specified in Technical Specification 3.3.3.1 and this Control. This determination is consistent with the Bases for Technical Specification 3.3.3.1.

The temporary lowering of an RDMS channel setpoint, by RDMS data base manipulation to verify alarm/trip functions, does not prevent the channel from continuously monitoring radiation levels (except WRGM). Additionally, when the setpoint is lowered below background radiation levels the associated trip functions will actuate equipment in their required operating mode as if a high radiation condition exists. The channel remains OPERABLE because monitoring and associated trip functions are not inhibited. Refer to TS-142 for further details.

When the SGBD demineralizers are being rinsed to the ocean using SGBD water, the SGBD flash tank radiation monitor (RM-6519) may become inoperable in this alignment from decreased backpressure to run the monitor sample pump. If this happens, the sampling requirements of Table A.5.1-1 ACTION 30 must be performed.

RM-6509, although in the flowpath of the SGBD demineralizer rinse, cannot perform the function of RM-6519 because it cannot achieve the same sensitivity to radiation. However, RM-6509 shall have its setpoints established per plant procedures since the discharge flow path is through the SGBD demineralizers (where a potential to acquire radioactivity exists), but after RM-6519.

If RM-6509 is inoperable, then in addition to the periodic sampling requirements of Table A.5.1-1 ACTION 30 for RM-6519, the batch sample and lineup verification of ACTION 29 would also have to be complied with, for RM-6509.

It should be noted that, during a SGBD demineralizer rinse to the discharge transition structure with SB liquid, SB-FE-1918 is not in the flow path. It is acceptable to use a flow monitoring device in the final flow path (such as WL-FIT-1458) so that Table A.5.1-1 ACTION 31 does **NOT** have to be entered.

The Note which corresponds to Table A.5.1-1 "**" states that pump performance curves generated in place "should" be used to estimate flow. Hence, there is no requirement to use the pump curves as described in these tables.

TABLE A.5.1-1

RADIOACTIVE LIQUID EFFLUENT MONITORING INSTRUMENTATION

INSTRUMENT	MINIMUM CHANNELS OPERABLE	ACTION
1. Radioactivity Monitors Providing Alarm and Automatic Termination of Release		
a. Liquid Radwaste Test Tank Discharge	1	29
b. Steam Generator Blowdown Flash Tank Drain	1*	30
c. Turbine Building Sump Effluent Line	1	30
d. Water Treatment Liquid Effluent Discharge	1	29
2. Flow Rate Measurement Devices		
a. Liquid Radwaste Test Tank Discharge	1	31
b. Steam Generator Blowdown Flash Tank Drain	1*	31
c. Circulating Water Discharge	1**	N.A.
d. Water Treatment Liquid Effluent Discharge	1	31

*Only applicable when steam generator blowdown is directed to the discharge transition structure without intermediate collection. The required radiation monitoring channel is RM-6519. The flow path must include a flow indicator which can be used to provide total flow discharged during period of interest.
**Pump performance curves generated in place should be used to estimate flow.

TABLE A.5.1-1

RADIOACTIVE LIQUID EFFLUENT MONITORING INSTRUMENTATION
(Continued)

INSTRUMENT	MINIMUM CHANNELS OPERABLE	ACTION
3. Radioactivity Monitors Providing Alarm but Not Termination of Release		
a. Primary Component Cooling Water System (in lieu of service water monitors)	1	32
4. Rate of Change Monitor		
a. Primary Component Cooling Water System Head Tank (in lieu of service water monitors)	1	33

TABLE A.5.1-1

(Continued)

ACTION STATEMENTS

ACTION 29 - With the number of channels OPERABLE less than the Minimum Channels OPERABLE requirement, effluent releases via this pathway may continue provided that prior to initiating a release

a. At least two independent samples are analyzed in accordance with Surveillance S.6.1.1, and

b. At least two technically qualified members of the station staff independently verify the release rate calculations and discharge line valving.

Otherwise, suspend release of radioactive effluents via this pathway.

ACTION 30 - With the number of channels OPERABLE less than the Minimum Channels OPERABLE requirement, effluent releases via this pathway may continue provided grab samples are analyzed for radioactivity at a lower limit of detection of no more than 10^{-7} microCurie/ml

a. At least once per 12 hours when the specific activity of the secondary coolant is greater than 0.01 microCurie/gram DOSE EQUIVALENT I-131, or

b. At least once per 24 hours when the specific activity of the secondary coolant is less than or equal to 0.01 microCurie/gram DOSE EQUIVALENT I-131.

ACTION 31 - With the number of channels OPERABLE less than the Minimum Channels OPERABLE requirement, effluent releases via this pathway may continue provided the flow rate is estimated at least once per 4 hours during actual releases. Pump performance curves generated in place may be used to estimate flow.

ACTION 32 - With the number of channels OPERABLE less than required by the Minimum Channels OPERABLE requirement, collect grab samples daily from the Primary Component Cooling Water System and the Service Water System and analyze the radioactivity until the inoperable channel(s) is restored to OPERABLE status.

ACTION 33 - With the number of channels OPERABLE less than required by the Minimum Channels OPERABLE requirement, effluent releases via this pathway may continue provided the radioactivity level is determined at least once per 12 hours during actual releases.

TABLE A.5.1-2

RADIOACTIVE LIQUID EFFLUENT MONITORING INSTRUMENTATION SURVEILLANCE REQUIREMENTS

INSTRUMENT	CHANNEL CHECK	SOURCE CHECK	CHANNEL CALIBRATION	CHANNEL OPERATIONAL TEST
1. Radioactivity Monitors Providing Alarm and Automatic Termination of Release				
a. Liquid Radwaste Test Tank Discharge	D	P	R(2)	P(1)
b. Steam Generator Blowdown Flash Tank Drain	D	M	R(2)	Q(1)
c. Turbine Building Sumps Effluent Line	D	M	R(2)	Q(1)
d. Water Treatment Liquid Effluent Discharge	D	P	R(2)	P(1)
2. Flow Rate Measurement Devices				
a. Liquid Radwaste Test Tank Discharge*	D(3)	N.A.	R	N.A.
b. Steam Generator Blowdown Flash Tank Drain***	D(3)	N.A.	R	N.A.
c. Circulating Water Discharge	**	N.A.	N.A.	N.A.
d. Water Treatment Liquid Effluent Discharge	D(3)	N.A.	R	N.A.

*Isolation of the flow path is accomplished by the Waste Test Tank Discharge Pump Trip Circuitry.
**Pump curves may be used to estimate flow.
***Applies to the flow indicator used in the discharge path when steam generator blowdown is directed to the discharge transition structure without intermediate collection.

TABLE A.5.1-2

RADIOACTIVE LIQUID EFFLUENT MONITORING INSTRUMENTATION SURVEILLANCE REQUIREMENTS

(Continued)

INSTRUMENT	CHANNEL CHECK	SOURCE CHECK	CHANNEL CALIBRATION	CHANNEL OPERATIONAL TEST
3. Radioactivity Monitor Providing Alarm but Not Termination of Release				
a. Primary Component Cooling Water System (in lieu of service water monitors)	D	M	R(2)	Q(1)
4. Rate of Change Monitor				
a. Primary Component Cooling Water System (in lieu of service water monitors)	D(4)	N.A.	R	N.A

TABLE A.5.1-2
(Continued)

TABLE NOTATIONS

(1) The DIGITAL CHANNEL OPERATIONAL TEST shall also demonstrate that automatic isolation of this pathway and Control Room alarm annunciation occurs if the instrument indicates measured levels above the normal or Surveillance test Alarm/Trip Setpoint.

(2) The initial channel calibration for radioactivity measurement instrumentation shall include the use of a known (traceable to National Institute for Standards and Technology) liquid radioactive source positioned in a reproducible geometry with respect to the sensor. These standards shall permit calibrating the system over its normal operating range of energy and rate. For subsequent channel calibrations, sources that have been related to the initial calibration shall be used.

(3) CHANNEL CHECK shall consist of verifying indication of flow during periods of release. CHANNEL CHECK shall be made at least once per 24 hours on days on which continuous, periodic, or batch releases are made.

(4) CHANNEL CHECK shall consist of verifying indication of tank level during periods of release. CHANNEL CHECK shall be made at least once per 24 hours.

5.2 Radioactive Gaseous Effluent Monitoring Instrumentation

CONTROLS

C.5.2 The radioactive gaseous effluent monitoring instrumentation channels shown in Table A.5.2-1 shall be OPERABLE with their Alarm/Trip Setpoints set to ensure that the limits of Control C.7.1.1 are not exceeded. The Alarm/Trip Setpoints of these channels meeting Control C.7.1.1 shall be determined and adjusted in accordance with the methodology and parameters in the ODCM (Part B).

APPLICABILITY: As shown in Table A.5.2-1.

ACTION:

a. With a radioactive gaseous effluent monitoring instrumentation channel Alarm/Trip Setpoint less conservative than required by the above specification, immediately suspend the release of radioactive gaseous effluents monitored by the affected channel, or declare the channel inoperable.

b. With the number of OPERABLE radioactive gaseous effluent monitoring instrumentation channels less than the Minimum Channels OPERABLE, take the ACTION shown in Table A.5.2-1. Restore the inoperable instrumentation to OPERABLE status within a time period determined by an evaluation conducted in accordance with the requirements of the Corrective Action Program. An evaluation is not required if the noncompliance is a consequence of surveillance testing or planned maintenance.

SURVEILLANCE REQUIREMENTS

S.5.2 Each radioactive gaseous effluent monitoring instrumentation channel shall be demonstrated OPERABLE by performance of the CHANNEL CHECK, SOURCE CHECK, CHANNEL CALIBRATION and CHANNEL OPERATIONAL TEST at the frequencies shown in Table A.5.2-2.

BASES

The radioactive gaseous effluent instrumentation is provided to monitor and control, as applicable, the releases of radioactive materials in gaseous effluents during actual or potential releases of gaseous effluents. The Alarm/Trip Setpoints for these instruments shall be calculated and adjusted in accordance with the methodology and parameters in the ODCM (Part B) to ensure that the alarm/trip will occur prior to exceeding the limits of 10 CFR Part 20. The OPERABILITY and use of this instrumentation is consistent with the requirements of General Design Criteria 60, 63, and 64 of Appendix A to 10 CFR Part 50. The sensitivity of any noble gas activity monitors used to show compliance with the gaseous effluent release requirements of Control C.7.2.1 shall be such that concentrations as low as 1×10^{-6} μCi/cc are measurable.

The main condenser air evacuation radiation monitor, RM-6505, is included with the Turbine Gland Seal Condenser Exhaust in Tables A.5.2-1 and A.5.2-2. Table A.5.2-1 defines the minimum channels operable and the required actions for the radioactive gaseous effluent monitoring instrumentation. Table A.5.2-2 lists the surveillance requirements for this instrumentation.

It is recommended that the out-of-service time for RM-6505 be tracked for reporting per C.5.2. (Reference ACR 96-197).

The Plant Vent Wide Range Gas Monitor (WRGM) design includes three ranges of noble gas monitors and two ranges of iodine and particulate sampling filters. The noble gas monitor, the equipment necessary to provide flow through three ranges of the noble gas monitors, and the iodine and particulate sample filters all affect the operability of the WRGM. The various combinations of out-of-service components are addressed in this clarification.

The WRGM noble gas activity monitor has three overlapping detector ranges: low, mid, and high.

UFSAR Table 12.3-15 lists the following ranges for the WRGM:

Low Range 10^{-7} - 10^{-1} μCi/cc
Mid Range 10^{-3} - 10^{3}
High Range 10^{-1} - 10^{5}

The minimum number of operable channels for the noble gas activity monitor, the flow rate monitors and the iodine sampler and particulate sampler is one, respectively .

The Controls do not list the specific WRGM noble gas activity monitor, the iodine/particulate sampler or the flow rate monitor channels separately by an instrumentation identification tag number.

Heat tracing of the sample lines, from the plant vent to the WRGM, is not listed as a specific requirement for WRGM operability. However, these circuits are necessary to ensure that the particulate and iodine concentration of the sample reaching the WRGM is representative of the effluent. The purpose of heat tracing is to ensure that the sample lines are free of moisture due to condensation. The low temperature alarm setpoint is variable based on outside ambient air temperature, and ensures that the sample line tubing metal temperature is high enough to prevent the moisture in the air from condensing inside of the sample line. The ability to detect of noble gases is not affected by the operational status of the heat tracing circuits.

The heat tracing on the sample lines within the PAB (CP 433, circuit 55) is not required for WRGM operation. (Engineering Evaluation, SS-EV-960017 and MMOD 02-0531)

The following equipment normally defines an operational WRGM:

<u>During routine releases,</u>

-Sample flow through one of the particulate and iodine (P&I) filters F-156-1,2,3 and channel 1 (low range) noble gas (NG) detectors using pump P-240-2, and

-Sample flow through P&I filters F-156-7,8 using pump RM-P-391.

or in the event the noble gas activity is in the mid/high range,

-Sample flow through one of the particulate/iodine (P&I) filters F-156-4,5,6 and channels 2 or 3 (mid/high range) NG detectors using pump P-240-1, and

-Sample flow bypassing P&I filters F-156-7,8 using pump RM-P-391.

At all times,

-Heat tracing (HT) on the sample lines from the plant vent to the WRGM.

Note: Dewpoint measurements may be used if heat tracing is out of service. (See the following table)

-Vent stack flow rate monitor.

-WRGM sample flow rate for the channel(s) in service.

The table below lists the action required in the event that a WRGM component is out of service.

Out of Service Component	Action
Low range NG detector	Enter Action 33. Perform grab sampling as required.
High range NG detector	Enter Action 33. The actions required by Action 33 are satisfied provided the Low range NG detector provides continuous indication of the effluent concentrations, grab sampling not required. In the unlikely event that elevated effluent concentrations above the capability of the low range detector are present, then grab sampling or backup monitoring will/may be required.
Mid range NG detector	No action required, detection capability met by the overlapping ranges of the low and high NG detectors. (May need to ensure that the high range pump [RM-P-240-1] starts on increasing activity.)
RM-P-391	Enter Action 35. The mid and high range particulate and iodine sampling capability is lost. If a low range P&I filter F-156-1,2 or 3 is in service then no further action is required. If the low range P&I filters are out of service then comply with Action 35 within one hour.
P-240-1 (High range pump)	Enter Action 33 and 35. Action 33 is satisfied provided the low range NG detector provides continuous indication of the effluent concentrations, grab sampling is not required. Action 35 is satisfied if P-240-2 , and filters F-156-1,-2, or -3 are in service. If these P&I filters are out of service and the NG activity is in the low range, then ensure compliance with Action 35 within one hour of identifying the out of service condition. In the unlikely event that elevated effluent concentrations above the capability of the low range detector are present, then, with P-391 operating, install a portable sample pump across valves V28 and V29 to facilitate P&I grab sampling using filters F-156-4,-5, or -6, and noble gas sampling using the medium and high range detectors.
P-240-2 (Low range pump)	Enter Action 33 and 35. Action 33 is satisfied by performing grab samples. Action 35 is satisfied by ensuring the operation of P-391 with filters F-156-7 & 8 in service within one hour of identifying the out-of-service condition.

HT circuit: CP-434 Ckt 28. (Sample line temperature less than 20°F above ambient as indicated by computer points B5946 / B5948.)	Enter Action 36. Action 36 is satisfied and the WRGM may remain OPERABLE with CP-434 Ckt 28 out of service provided that CP-426 Ckt 46 is energized within 1 hr of the out-of-service condition.
Flow rate monitor and/or sampler flow rate monitor.	Comply with Action 32.

Action Statement 35 provides no guidance with regard to time required to initiate auxiliary sampling upon failure of a monitor. A finite time is required to take the appropriate actions to initiate auxiliary sampling. An interval of 60 minutes is a reasonable period of time in which to accomplish these actions provided that no activity occurs during this period which could result in an increase in radiation release levels.

Since the intent of Action 35 is to allow continued release of gaseous effluents provided an alternate means of continuous monitoring/collection capability is on-going during the release of radioactive gaseous effluents, the 60 minute time frame for auxiliary sampling to be established is still a reasonable period of time to complete the necessary manual actions to establish auxiliary sampling. If auxiliary sampling cannot be established within 60 minutes then the initial action of immediately suspending the release of radioactive gaseous effluents should be done, as specified in Action a. of C.5.2. It should be noted that for lack of specified criteria the 60-minute time period is solely based on prudent engineering judgment for completion of manual actions in order to satisfy the intent of Action 35. Operation beyond 60 minutes without auxiliary sampling service would need to be justified by engineering calculation to ensure continued compliance with 10 CFR Part 20 limits.

On those occasions when a radiation monitor or any system/component must be rendered inoperable to perform a surveillance test, the Station Management Manual (SSMM) policy regarding "the use of ACTION requirements to perform maintenance or a test" applies.

When a surveillance test must be performed on the WRGM, rendering it inoperable, Action 35 cannot be fully satisfied because of the nature of testing is incompatible with the Action 35 required installation of auxiliary sampling equipment. However, because the performance of the WRGM surveillance renders it inoperable for only a short period of time (e.g., less than one hour), it is reasonable to allow the surveillance test to be performed without the installation of the auxiliary sampling equipment. It should be noted that neither C.5.2 Action a. nor Action b. requires the immediate establishment of auxiliary sampling. However, if there is concern that the results of surveillance testing activities will identify the instrumentation as inoperable then it would be prudent to set up the auxiliary sampling equipment prior to surveillance testing. The prudent action would prevent the potential situation of continued release of gaseous effluents beyond 60 minutes without continuous monitoring/collection capability.

The current procedural method of collecting the grab sample from the plant vent release pathway requires the shutdown of the compensatory sampling equipment pump (for pressure equilibrium purposes) whenever a grab sample is to be withdrawn into the sample bottle. Shutting down the pump raises the question as to whether this action contradicts the "continuous collection" requirement of Action 35.

Action 35 allow effluent release to continue provided samples are continuously collected (as required in Table A.7.1-1) with auxiliary equipment whenever the number of channels OPERABLE is less than the Minimum Channels OPERABLE requirement. Table A.7.1-1 requires that the sampling frequency be continuous for iodine and particulate and a monthly grab sample for noble gasses (Kr and Xe). The ODCM also requires that the ratio of the sample flow rate to the sampled stream flow rate be known/determined for the time period covered by each dose or dose rate calculation made in accordance with C.7.1.1, C.7.2.1, and C.7.3.1 (i.e., weekly and/or monthly).

It must be noted that Action 35 pertains to the iodine and particulate samplers. For noble gas collection, Action 33 is applicable which requires grab samples be taken once per 12 hours and analyzed for radioactivity within 24 hours. Action 33 does not specify that auxiliary sampling for noble gas must be continuous; therefore, the concern for "continuous" monitoring/collection is not applicable for auxiliary sampling of noble gas.

Whenever the station is operating under the auspices of Action 35 the process of collecting grab samples by the auxiliary sampling method necessitates, on occasions, the temporary disablement of permanent and/or temporary equipment (e.g., installation, and disconnection of auxiliary sampling equipment, pressure equalization, etc.) in order to achieve and comply with the requirements of Action 35. Therefore, actions required (e.g. temporarily shutting down the sample pump in order to install / remove / equalize sample bottles, thus interrupting continuous flow) to obtain a grab sample are not considered actions that are contrary in meeting the intent of Action 35.

The temporary lowering of an RDMS channel setpoint, by RDMS data base manipulation to verify alarm/trip functions, does not prevent the channel from continuously monitoring radiation levels (except WRGM). Additionally, when the setpoint is lowered below background radiation levels the associated trip functions will actuate equipment in their required operating mode as if a high radiation condition exists. The channel remains OPERABLE because monitoring and associated trip functions are not inhibited. Refer to TS-142 for further details. Therefore, during performance of a RDMS channel DCOT, the LCO remains satisfied. Entering an ACTION statement is not appropriate nor required (except for WRGM DCOT). However, because the channel is in alarm status, increased operator vigilance is required to note any increase in radiation levels during the DCOT surveillance period and to take remedial actions if required.

C.5.2 ACTION Statement #33 is applied if RM-6504 is inoperable. The intent of the last sentence is that RM-6503 may be used instead of taking a grab sample. It is not intended that RM-6503 be used in place of RM-6504 and ACTION Statement #33 not entered.

RM-6504 monitors the radiation level of the gas stream at the outlet of the waste gas compressors. If a high radiation level is detected, RM-6504 automatically closes WG-FV-1602. The closing of WG-FV-1602 isolates a potential radiological release path to the environment. RM-6503, located at the inlet to the waste gas compressor, provides alarm and monitoring functions only. It does not have the ability to terminate a radiological release. Therefore, it cannot be used as a substitute for RM-6504.

C.5.2 ACTION b. permits operations to continue for up to 30 days with an inoperable instrument channel. If the inoperable instrument is not returned to OPERABLE status within this time, a report must be submitted explaining why the inoperability was not corrected in a timely manner. If RM-6503 were considered a alternate for RM-6504 then operations could continue indefinitely without the ability to automatically terminate a radiological release. This is clearly not the intent of C.5.2 ACTION Statement #33.

Table A.5.2-1, Radioactive Gaseous Effluent Monitoring Instrumentation, specifically lists RM-6504 as the instrument required to satisfy the Limiting Condition for operation. This table also states that the monitor provide the functions of alarm and automatic termination of release.

TABLE A.5.2-1

RADIOACTIVE GASEOUS EFFLUENT MONITORING INSTRUMENTATION

INSTRUMENT		MINIMUM CHANNELS OPERABLE	APPLICABILITY	ACTION
1.	(Not Used)			
2.	PLANT VENT-WIDE RANGE GAS MONITOR			
	a. Noble Gas Activity Monitor	1	*	33
	b. Iodine Sampler	1	*	35
	c. Particulate Sampler	1	*	35
	d. Flow Rate Monitor	1	*	32
	e. Sampler Flow Rate Monitor	1	*	32, 35
	f. Sample Line Temperature	1	*	36
3.	GASEOUS WASTE PROCESSING SYSTEM (Providing Alarm and Automatic Termination of Release - RM-6504)			
	a. Noble Gas Activity Monitor (Process)	1	*	33
4.	TURBINE GLAND SEAL CONDENSER EXHAUST			
	a. Iodine Sampler	1	***	35
	b. Particulate Sampler	1	***	35
	c. Sampler Flow Rate Indicator	1	***	32, 35
	d. Noble Gas Activity Monitor (RM 6505)	1	***	34

* At all times.

** (Not Used.)

*** When the gland seal exhauster is in operation.

TABLE A.5.2-1
(Continued)

ACTION STATEMENTS

ACTION 32 - With the number of channels OPERABLE less than the Minimum Channels OPERABLE requirement, effluent releases via this pathway may continue provided the flow rate is estimated at least once per 4 hours.

ACTION 33 - With the number of channels OPERABLE less than the Minimum Channels OPERABLE requirement, effluent releases via this pathway may continue provided grab samples are taken at least once per 12 hours and these samples are analyzed for radioactivity within 24 hours. For RM-6504, RM-6503 may be used instead of taking grab samples (see Bases for reporting requirements).

ACTION 34 - With RM-6505 INOPERABLE and the gland seal exhauster in operation, effluent releases via the turbine gland seal condenser exhaust may continue provided grab samples from condenser air evacuation pump effluent are taken at least once per 12 hours, and analyzed for radioactivity within 24 hours.

ACTION 35 - With the number of channels OPERABLE less than the Minimum Channels OPERABLE requirement, effluent releases via the affected pathway may continue provided samples are continuously collected with auxiliary sampling equipment as required in this document.

Auxiliary sampling must be initiated within 60 minutes. Additionally, the auxiliary sampling equipment need not be installed during surveillance activities provided the surveillance testing is completed in less than one hour. Actions required (e.g., temporarily shutting down the sample pump in order to install / remove / equalize sample bottles, thus interrupting continuous flow) to obtain a grab sample are not considered actions that are contrary in meeting the intent of this Action.

Auxiliary sample equipment includes sample flow monitoring to provide information used in the sample analysis.

ACTION 36 - If, for any reason, the sample line temperature cannot be maintained greater than 20° above outside ambient air temperature, the WRGM may remain OPERABLE provided dewpoint measurements are obtained every 12 hours verifying that conditions do not exist for condensation in the sample line with the inservice operating sample pump. (CX0901.38)

TABLE A.5.2-2

RADIOACTIVE GASEOUS EFFLUENT MONITORING INSTRUMENTATION SURVEILLANCE REQUIREMENTS

INSTRUMENT	CHANNEL CHECK	SOURCE CHECK	CHANNEL CALIBRATION	CHANNEL OPERATIONAL TEST	MODES FOR WHICH SURVEILLANCE IS REQUIRED
1 (Not Used)					
2. PLANT VENT-WIDE RANGE GAS MONITOR					
a. Noble Gas Activity Monitor	D	M	R(3)	Q(2)	*
b. Iodine Sampler	W	N.A	N.A.	N.A.	*
c. Particulate Sampler	W	N.A.	N.A.	N.A.	*
d. Flow Rate Monitor	D	N.A.	R	Q****	*
e. Sampler Flow Rate Monitor	D	N.A.	R	Q****	*
f. Sample Line Temperature	N.A.	N.A.	240W	N.A.	*
3. GASEOUS WASTE PROCESSING SYSTEM (Providing Alarm and Automatic Termination of Release)					
a. Noble Gas Activity Monitor (Process)	D	N.A.	R(5)	Q(1)	*
4. TURBINE GLAND SEAL CONDENSER EXHAUST					
a. Iodine Sampler	W	N.A.	N.A.	N.A.	***
b. Particulate Sampler	W	N.A.	N.A.	N.A.	***
c. Sampler Flow Rate Indicator	D	N.A.	N.A.	N.A.	***
d. Noble Gas Activity Monitor (RM 6505)	D	M	R(3)	Q(2)	***

TABLE A.5.2-2
(Continued)

TABLE NOTATIONS

* At all times.

** (Not Used.)

*** When the gland seal exhauster is in operation.

**** The CHANNEL OPERATIONAL TEST for the flow rate monitor shall consist of a verification that the Radiation Data Management System (RDMS) indicated flow is consistent with the operational status of the plant.

(1) The DIGITAL CHANNEL OPERATIONAL TEST shall also demonstrate that automatic isolation of this pathway and Control Room alarm annunciation occurs if the instrument indicates measured levels above the normal or Surveillance test Alarm/Trip Setpoint.

(2) The DIGITAL CHANNEL OPERATIONAL TEST shall also demonstrate that Control Room alarm annunciation occurs if the instrument indicates measured levels above the normal or Surveillance test Alarm Setpoint.

(3) The initial channel calibration for radioactivity measurement instrumentation shall include the use of a known (traceable to National Institute for Standards and Technology) radioactive source positioned in a reproducible geometry with respect to the sensor. These standards should permit calibrating the system over its normal operating range of rate capabilities. For subsequent channel calibrations, sources that have been related to the initial calibration shall be used.

(4) (Not Used).

(5) The CHANNEL CALIBRATION shall be performed using sources of various activities covering the measurement range of the monitor to verify that the response is linear. Sources shall be used to verify the monitor response only for the intended energy range.

6.0 RADIOACTIVE LIQUID EFFLUENTS

6.1 Concentration

CONTROLS

C.6.1.1 The concentration of radioactive material released in liquid effluents at the point of discharge from the multiport diffuser (see Technical Specifications Figure 5.1-3) shall be limited to not more than ten times the concentrations specified in 10 CFR Part 20, Appendix B, Table 2, Column 2, for radionuclides other than dissolved or entrained noble gases. For dissolved or entrained noble gases, the concentration shall be limited to 2×10^{-4} μCi/ml total activity.

APPLICABILITY: At all times.

ACTION:

With the concentration of radioactive material released in liquid effluents at the point of discharge from the multiport diffuser exceeding the above limits, restore the concentration to within the above limits within 15 minutes.

SURVEILLANCE REQUIREMENTS

S.6.1.1 Radioactive liquid wastes shall be sampled and analyzed according to the sampling and analysis program specified in Table A.6.1-1.

S.6.1.2 The results of the radioactivity analyses shall be used in accordance with the methodology and parameters in Part B of the ODCM to assure that the concentrations at the point of release are maintained within the limits of Control C.6.1.1.

BASES

This Control is provided to ensure that the concentration of radioactive materials released in liquid waste effluents at the point of discharge from the multiport diffuser will be less than the concentration levels specified in 10 CFR Part 20, Appendix B to 20, Table 2, Column 2 (most restrictive). This limitation provides additional assurance that the levels of radioactive materials in bodies of water in UNRESTRICTED AREAS will result in exposures within (1) the Section II.A design objectives of Appendix I, 10 CFR Part 50, to a MEMBER OF THE PUBLIC, and (2) the limits of Appendix I, 10 CFR 20.1301 and 20.1302 to the population. Those values assure a continuous discharge at those concentrations (8760 hours per year). Pursuant to the requirements of 10 CFR 50.36a to maintain effluent concentrations as low as reasonably achievable (ALARA), Appendix I to10 CFR 50 specifies dose values that are a small percentage of the dose limits in 10 CFR 20.1301. Consistent with Appendix I to10 CFR 50, to allow operational flexibility, this specification in conjunction with the dose specification in Section C-6.2 permits an instantaneous concentration release rate up to a factor of ten times greater than specified in 10 CFR 20, Appendix B, Table 2, Column 2 while continuing to limit the total annual discharge to a small fraction of the allowable annual dose as specified in Appendix I.

The concentration limit for dissolved or entrained noble gases is based upon the assumption that Xe-135 is the controlling radioisotope and its MPC in air (submersion) was converted to an equivalent concentration in water using the methods described in International Commission on Radiological Protection (ICRP) Publication 2. For technical requirements associated with the release of liquid effluent, the method currently in use for controlling releases of dissolved and entrained noble gases is suitable for demonstrating conformance to the requirements of the "new" 10 CFR 20, Appendix B ECL concentration limits because the $2X10^{-4}\mu Ci/ml$ criterion is based on the "old" MPC value for Xe-135 as the driving radionuclide. Controlling liquid effluent to within the MPC values based on an instantaneous release rate (i.e., no time averaging of effluent concentrations) is considered more conservative than the requirements of the new Part 20 which have limits stated as effluent concentrations averaged over a year. In other words, if discharged dissolved and entrained noble gas concentrations remain within the instantaneous concentration limit of $2X10^{-4}\mu Ci/ml$ during the times that discharges actually take place, then there is reasonable confidence that the annual average limits established by the ECL values will also be met. This position is based on a June 30, 1993 letter from Thomas E. Murley (then Director, Office of Nuclear Reactor Regulation) to Thomas E. Tipton of NEI, in which the NRC responded to an industry inquiry on promulgation of a new Part 20.

Controls C.6.1.1 and C.5.1 provide controls to ensure that the concentration of radioactive materials released in liquid waste effluents at the point of discharge from the multiport diffuser will be less than the concentration levels specified in 10 CFR 20, Appendix B, Table 2, Column 2. As no LLD is specified for the compensatory samples taken for an inoperable PCCW Head Tank Rate of Change Monitor, the LLD for these samples must ensure that these limits are met.

Although the periodic Service Water System sample is counted to an LLD of $5x10^{-7}\mu Ci/cc$, the compensatory samples for inoperable SGBD Flash Tank and Turbine Building Sump Monitors are required to be counted to an LLD of $1x10^{-7}\mu Ci/cc$. This more restrictive limit will ensure that the limits of 10 CFR 20 are met during periods of PCCW Head Tank Rate of Change Monitor inoperability, thereby ensuring compliance with the requirements of the respective Controls.

Counting the required grab samples to an LLD of $1x10^{-7}\mu Ci/cc$ is therefore an acceptable method of complying with these requirements; it is not necessary to meet the LLD of $1x10^{-8}\mu Ci/cc$ specified as the equivalent sensitivity of the PCCW Head Tank Rate of Change Monitor.

TABLE A.6.1-1

RADIOACTIVE LIQUID WASTE SAMPLING AND ANALYSIS PROGRAM

Liquid Release Type	Sampling Frequency	Minimum Analysis Frequency	Type of Activity Analysis	Lower Limit of Detection (LLD) [1] (μCi/ml)
A. 1. Liquid Radwaste Test Tanks (WL-TK-63A+B) (BRS-TK58A+B) SGBD Waste Holdup Sump	P Each Batch	P Each Batch	Principal Gamma Emitters[3]	$5x10^{-7}$
2. Neutralization Tank (TK-32)			I-131	$1x10^{-6}$
3. Low Conductivity Tank (TK-274)	P One Batch/M	M	Dissolved and Entrained Gases (Gamma Emitters)	$1x10^{-5}$
(Batch Release)[2]	P Each Batch	M[4] Composite	H-3	$1x10^{-5}$
			Gross Alpha	$1x10^{-7}$
	P Each Batch	Q[4] Composite	Sr-89, Sr-90	$5x10^{-8}$
			Fe-55	$1x10^{-6}$
B. 1. Turbine Building Sump Effluent[8]	W Grab Sample	W	Principal Gamma Emitters[3]	$5x10^{-7}$
2. Steam Generator Blowdown [6][8]				
3. Condensate Polishing / Steam Generator Blowdown Demineralizer Megarinse [8][12]			I-131	$1x10^{-6}$
(Continuous Release) [5]	W Grab Sample	M	Dissolved and Entrained Gases (Gamma Emitters)	$1x10^{-5}$

TABLE A.6.1-1
RADIOACTIVE LIQUID WASTE SAMPLING AND ANALYSIS PROGRAM
(Continued)

Liquid Release Type	Sampling Frequency	Minimum Analysis Frequency	Type of Activity Analysis	Lower Limit of Detection (LLD) [1] (μCi/ml)
B. (Continued)	W Grab Sample	M	H-3	$1x10^{-5}$
			Gross Alpha	$1x10^{-7}$
	W Grab Sample	Q (9)	Sr-89, Sr-90	$5x10^{-8}$
			Fe-55	$1X10^{-6}$
C. Service Water[7] [10]	W Grab Sample	W	Principal Gamma Emitters[3]	$5x10^{-7}$
			I-131	$1x10^{-6}$
	W Grab Sample	M	Dissolved and Entrained Gases (Gamma Emitters)	$1x10^{-5}$
	W Grab Sample	M	H-3	$1x10^{-5}$
			Gross Alpha	$1x10^{-7}$
	W Grab Sample	Q	Sr-89, Sr-90	$5x10^{-8}$
			Fe-55	$1x10^{-6}$

TABLE A.6.1-1
RADIOACTIVE LIQUID WASTE SAMPLING AND ANALYSIS PROGRAM
(Continued)

Liquid Release Type	Sampling Frequency	Minimum Analysis Frequency	Type of Activity Analysis	Lower Limit of Detection (LLD) [1] (µCi/ml)
D. Subsurface Dewatering [11]	M Grab Sample	M	Principal Gamma Emitters [3]	$5x10^{-7}$
			H-3	$2x10^{-6}$
	M Grab Sample	M	Gross Alpha	$1x10^{-7}$
	M Grab Sample	Q	Sr-89, Sr-90	$5x10^{-8}$
			Fe-55	$1x10^{-6}$

P - Prior to Discharge
W - Weekly
M - Monthly
Q - Quarterly

TABLE A.6.1-1
RADIOACTIVE LIQUID WASTE SAMPLING AND ANALYSIS PROGRAM
(Continued)

Notations

(1) The LLD is defined, for purposes of these specifications, as the smallest concentration of radioactive material in a sample that will yield a net count, above system background, that will be detected with 95 percent probability with only 5 percent probability of falsely concluding that a blank observation represents a "real" signal.

For a particular measurement system, which may include radiochemical separation:

$$LLD = \frac{4.66\, S_b}{E \times V \times 2.22 \times 10^6 \times Y \times \exp(-\lambda \Delta t)}$$

Where:

LLD = the "a priori" lower limit of detection (microcurie per unit mass or volume),

4.66 = a constant derived from the K_{alpha} and K_{beta} values for the 95% confidence level;

S_b = the standard deviation of the background counting rate or of the counting rate of a blank sample as appropriate (counts per minute),

E = the counting efficiency (counts per disintegration),

V = the sample size (units of mass or volume),

2.22×10^6 = the number of disintegrations per minute per microcurie,

Y = the fractional radiochemical yield, when applicable,

λ = the radioactive decay constant for the particular radionuclide (s^{-1}), and

Δt = the elapsed time between the midpoint of sample collection and the time of counting(s).

Typical values of E, V, Y, and Δt should be used in the calculation.

It should be recognized that the LLD is defined as an a priori (before the fact) limit representing the capability of a measurement system and not as an a posteriori (after the fact) limit for a particular measurement.

(2) A batch release is the discharge of liquid wastes of a discrete volume. Prior to sampling for analyses, each batch shall be isolated, and then thoroughly mixed to assure representative sampling.

TABLE A.6.1-1
RADIOACTIVE LIQUID WASTE SAMPLING AND ANALYSIS PROGRAM
(Continued)

Notations
(Continued)

(3) The principal gamma emitters for which the LLD specification applies include the following radionuclides: Mn-54, Fe-59, Co-58, Co-60, Zn-65, Mo-99, Cs-134, Cs-137, Ce-141, and Ce-144. This list does not mean that only these nuclides are to be considered. Other gamma peaks that are identifiable, together with those of the above nuclides, shall also be analyzed and reported in the Annual Radioactive Effluent Release Report in accordance with Technical Specification 6.8.1.4. Isotopes which are not detected should be reported as "not detected." Values determined to be below detectable levels are not used in dose calculations.

(4) A composite sample is one in which the quantity of liquid sampled is proportional to the quantity of liquid waste discharged and in which the method of sampling employed results in a specimen that is representative of the liquids released.

(5) A continuous release is the discharge of liquid wastes of a nondiscrete volume, e.g., from a volume of a system that has an input flow during the continuous release.

(6) Sampling and analysis is only required when Steam Generator Blowdown is directed to the discharge transition structure.

(7) Principal gamma emitters shall be analyzed weekly in Service Water. Sample and analysis requirements for dissolved and entrained gases, tritium, gross alpha, strontium 89 and 90, and Iron 55 shall only be required when analysis for principal gamma emitters exceeds the LLD.

The following are additional sampling and analysis requirements:

a. PCCW sampled and analyzed weekly for principal gamma emitters.

b. Sample Service Water System (SWS) daily for principal gamma emitters whenever primary component cooling water (PCCW) activity exceeds $1x10^{-3}$ μC/cc.

c. With the PCCW System radiation monitor inoperable, sample PCCW and SWS daily for principal gamma emitters.

d. With a confirmed PCCW/SWS leak and PCCW activity in excess of $1x10^{-4}$ μC/cc, sample SWS every 12 hours for principal gamma emitters.

e. The setpoint on the PCCW head tank liquid rate-of-change alarm will be set to ensure that its sensitivity to detect a PCCW/SWS leak is equal to or greater than that of an SWS radiation monitor, located in the unit's combined SWS discharge, with an LLD of $1x10^{-8}$ μC/cc. If this sensitivity cannot be achieved, the SWS will be sampled once every 12 hours.

TABLE A.6.1-1
RADIOACTIVE LIQUID WASTE SAMPLING AND ANALYSIS PROGRAM
(Continued)

Notations
(Continued)

(8) If the Turbine Building Sump, Steam Generator Blowdown Flash Tank, Steam Generator Blowdown Demineralizer Megarinse, or Condensate Polishing Demineralizer Megarinse isolate due to high concentration of radioactivity, that liquid stream will be sampled and analyzed for Iodine-131 and principal gamma emitters prior to release.

(9) Quarterly composite analysis requirements shall only be required when analysis for principal gamma emitters indicate positive radioactivity.

(10) A grab sample can be considered as a combination of aliquots taken from each SW train during the same collection cycle or as individual samples taken from each train in service.

(11) Principal gamma emitters and tritium shall be analyzed monthly in subsurface dewatering samples. Sample analysis requirements for gross alpha, strontium 89 and 90, and Iron 55 shall only be required when analysis for principal gamma emitters exceeds the LLD.

(12) Condensate Polishing Demineralizer or Steam Generator Blowdown Megarinse water shall be sampled and analyzed for principal gamma emitters and I-131 prior to initiation of the megarinse discharge to the circulating water system

6.2 Dose

CONTROLS

C.6.2.1 The dose or dose commitment to a MEMBER OF THE PUBLIC from radioactive materials in liquid effluents released, from each unit, to UNRESTRICTED AREAS (see Technical Specification Figure 5.1-3) shall be limited

a. During any calendar quarter to less than or equal to 1.5 mrems to the whole body and to less than or equal to 5 mrems to any organ, and

b. During any calendar year to less than or equal to 3 mrems to the whole body and to less than or equal to 10 mrems to any organ.

APPLICABILITY: At all times.

ACTION:

With the calculated dose from the release of radioactive materials in liquid effluents exceeding any of the above limits, prepare and submit to the Commission within 30 days, pursuant to Technical Specification 6.8.2, a Special Report that identifies the cause(s) for exceeding the limit(s) and defines the corrective actions that have been taken to reduce the releases and the proposed corrective actions to be taken to assure that subsequent releases will be in compliance with the above limits.

SURVEILLANCE REQUIREMENTS

S.6.2.1 Cumulative dose contributions from liquid effluents for the current calendar quarter and the current calendar year shall be determined in accordance with the methodology and parameters in Part B of the ODCM at least once per 31 days.

This Control is provided to implement the requirements of Sections II.A, III.A, and IV.A of Appendix I to 10 CFR Part 50. The Control implements the guides set forth in Section II.A of Appendix I. The ACTION statements provide the required operating flexibility and at the same time implement the guides set forth in Section IV.A of Appendix I to assure that the releases of radioactive material in liquid effluents to UNRESTRICTED AREAS will be kept as low as is reasonably achievable. The dose calculation methodology and parameters in the ODCM implement the requirements in Section III.A of Appendix I that conformance with the guides of Appendix I be shown by calculational procedures based on models and data, such that the actual exposure of a MEMBER OF THE PUBLIC through appropriate pathways is unlikely to be substantially underestimated. The equations specified in the ODCM for calculating the doses due to the actual release rates of radioactive materials in liquid effluents are consistent with the methodology provided in Regulatory Guide 1.109, "Calculation of Annual Doses to Man from Routine Releases of Reactor Effluents for the Purpose of Evaluating Compliance with 10 CFR Part 50, Appendix I," Revision 1, October 1977 and Regulatory Guide 1.113, "Estimating Aquatic Dispersion of Effluents from Accidental and Routine Reactor Releases for the Purpose of Implementing Appendix I," April 1977.

6.3 Liquid Radwaste Treatment System

CONTROLS

C.6.3.1 The Liquid Radwaste Treatment System shall be OPERABLE and appropriate portions of the system shall be used to reduce releases of radioactivity when the projected doses due to the liquid effluent to UNRESTRICTED AREAS (see Technical Specification Figure 5.1-3) would exceed 0.06 mrem to the whole body or 0.2 mrem to any organ in a 31-day period.

APPLICABILITY: At all times.

ACTION:

With radioactive liquid waste being discharged without treatment and in excess of the above limits and any portion of the Liquid Radwaste Treatment System which could reduce the radioactive liquid waste discharged not in operation, prepare and submit to the Commission within 30 days, pursuant to Specification 6.8.2, a Special Report that includes the following information:

a. Explanation of why liquid radwaste was being discharged without treatment, identification of any inoperable equipment or subsystems, and the reason for the inoperability,

b. Action(s) taken to restore the inoperable equipment to OPERABLE status, and

c. Summary description of action(s) taken to prevent a recurrence.

SURVEILLANCE REQUIREMENTS

S.6.3.1 Doses due to liquid releases from each unit to UNRESTRICTED AREAS shall be projected at least once per 31 days in accordance with the methodology and parameters in Part B of the ODCM when Liquid Radwaste Treatment Systems are not being fully utilized.

S.6.3.2 The installed Liquid Radwaste Treatment System shall be considered OPERABLE by meeting Controls C.6.1.1 and C.6.2.1.

The OPERABILITY of the Liquid Radwaste Treatment System ensures that this system will be available for use whenever liquid effluents require treatment prior to release to the environment. The requirement that the appropriate portions of this system be used when specified provides assurance that the releases of radioactive materials in liquid effluents will be kept as low as is reasonably achievable. This specification implements the requirements of 10 CFR 50.36a, General Design Criterion 60 of Appendix A to 10 CFR Part 50, and the design objective given in Section II.D of Appendix I to 10 CFR Part 50. The specified limits governing the use of appropriate portions of the Liquid Radwaste Treatment System were specified as a suitable fraction of the dose design objectives set forth in Section II.A of Appendix A to 10 CFR Part 50 for liquid effluents.

7.0 RADIOACTIVE GASEOUS EFFLUENTS

7.1 Dose Rate

CONTROLS

C.7.1.1 The dose rate due to radioactive materials released in gaseous effluents from the site to areas at and beyond the SITE BOUNDARY (see Technical Specification Figure 5.1-1) shall be limited to the following:

a. For noble gases: Less than or equal to 500 mrems/yr to the whole body and less than or equal to 3000 mrems/yr to the skin, and

b. For Iodine-131, for Iodine-133, for tritium, and for all radionuclides in particulate form with half-lives greater than 8 days: Less than or equal to 1500 mrems/yr to any organ.

APPLICABILITY: At all times.

ACTION:

With the dose rate(s) exceeding the above limits, decrease the release rate within 15 minutes to within the above limit(s).

SURVEILLANCE REQUIREMENTS

S.7.1.1 The dose rate due to noble gases in gaseous effluents shall be determined to be within the above limits in accordance with the methodology and parameters in Part B of the ODCM.

S.7.1.2 The dose rate due to Iodine-131, Iodine-133, tritium, and all radionuclides in particulate form with half-lives greater than 8 days in gaseous effluents shall be determined to be within the above limits in accordance with the methodology and parameters in the ODCM by obtaining representative samples and performing analyses in accordance with the sampling and analysis program specified in Table A.7.1-1.

This Control is provided to ensure that the dose at any time at and beyond the SITE BOUNDARY from gaseous effluents from all units on the site will be within the annual dose limits of 10 CFR Part 20 to UNRESTRICTED AREAS. The annual dose limits are the doses associated with the concentrations of 10 CFR Part 20, Appendix B, Table 2, Column 1. These limits provide reasonable assurance that radioactive material discharged in gaseous effluents will not result in the exposure of a MEMBER OF THE PUBLIC in an UNRESTRICTED AREA, either within or outside the SITE BOUNDARY, to annual average concentrations exceeding the limits specified in Appendix B, Table 2 of 10 CFR Part 20 (10 CFR Part 20.1302[c]). For MEMBERS OF THE PUBLIC who may at times be within the SITE BOUNDARY, the occupancy of the MEMBER OF THE PUBLIC will usually be sufficiently low to compensate for any increase in the atmospheric diffusion factor above that for the SITE BOUNDARY. Examples of calculations for such MEMBERS OF THE PUBLIC, with the appropriate occupancy factors, shall be given in the ODCM. The specified release rate limits restrict, at all times, the corresponding gamma and beta dose rates above background to a MEMBER OF THE PUBLIC at or beyond the SITE BOUNDARY to less than or equal to 500 mrems/year to the whole body or to less than or equal to 3000 mrems/year to the skin. These release rate limits also restrict, at all times, the corresponding thyroid dose rate above background to a child via the inhalation pathway to less than or equal to 1500 mrems/year.

TABLE A.7.1-1
RADIOACTIVE GASEOUS WASTE SAMPLING
AND ANALYSIS PROGRAM

Gaseous Release Type	Sampling Frequency	Minimum Analysis Frequency	Type of Activity Analysis	Lower Limit of Detection[1] (LLD) (μCi/cc)
1. Plant Vent	M[3][4] Grab Sample	M	Principal Gamma Emitters[2]	$1x10^{-4}$
			H-3	$1x10^{-6}$
	Continuous[5]	W[6] Charcoal Sample	I-131	$1x10^{-12}$
	Continuous[5]	W[6] Particulate Sample	Principal Gamma Emitters[2]	$1x10^{-11}$
	Continuous[5]	M Composite Particulate Sample	Gross Alpha	$1x10^{-11}$
	Continuous[5]	Q Composite Particulate Sample	Sr-89, Sr-90	$1x10^{-11}$
2. Condenser Air Removal Exhaust	M[7] Grab Sample	M[7] Noble Gases	Principal Gamma Emitters[2]	$1x10^{-4}$
			H-3	$1x10^{-6}$

TABLE A.7.1-1
RADIOACTIVE GASEOUS WASTE SAMPLING
AND ANALYSIS PROGRAM
(Continued)

Gaseous Release Type	Sampling Frequency	Minimum Analysis Frequency	Type of Activity Analysis	Lower Limit of Detection[1] (LLD) (μCi/cc)
3. Gland Steam Packing Exhauster	Continuous	W Particulate Sample	Principal Gamma Emitters[2]	$1x10^{-11}$
	Continuous	W Charcoal Sample	I-131	$1x10^{-12}$
	Continuous	M Composite Particulate Sample	Gross Alpha	$1x10^{-11}$
	Continuous	Q Composite Particulate Sample[8]	Sr-89, Sr-90	$1x10^{-11}$
4. Containment Purge	P[3] Each Purge Grab Sample	P Each Purge	Principal Gamma Emitters[2]	$1x10^{-4}$
			H-3 (oxide)	$1x10^{-6}$

TABLE A.7.1-1
RADIOACTIVE GASEOUS WASTE SAMPLING
AND ANALYSIS PROGRAM
(Continued)

Notations

(1) The LLD is defined, for purposes of these specifications, as the smallest concentration of radioactive material in a sample that will yield a net count, above system background, that will be detected with 95 percent probability with only 5 percent probability of falsely concluding that a blank observation represents a "real" signal.

For a particular measurement system, which may include radiochemical separation:

$$LLD = \frac{4.66\, S_b}{E \times V \times 2.22 \times 10^6 \times Y \times \exp(-\lambda \Delta t)}$$

Where:

LLD = the "a priori" lower limit of detection (microcurie per unit mass or volume),

4.66 = a constant derived from the K_{alpha} and K_{beta} values for the 95% confidence level;

S_b = the standard deviation of the background counting rate or of the counting rate of a blank sample as appropriate (counts per minute),

E = the counting efficiency (counts per disintegration),

V = the sample size (units of mass or volume),

2.22×10^6 = the number of disintegrations per minute per microcurie,

Y = the fractional radiochemical yield, when applicable,

λ = the radioactive decay constant for the particular radionuclide (s^{-1}), and

Δt = the elapsed time between the midpoint of sample collection and the time of counting(s).

Typical values of E, V, Y, and Δt should be used in the calculation.

It should be recognized that the LLD is defined as an a priori (before the fact) limit representing the capability of a measurement system and not as an a posteriori (after the fact) limit for a particular measurement.

TABLE A.7.1-1
RADIOACTIVE GASEOUS WASTE SAMPLING
AND ANALYSIS PROGRAM
(Continued)

Notations
(Continued)

(2) The principal gamma emitters for which the LLD specification applies include the following radionuclides: Kr-87, Kr-88, Xe-133, Xe-133m, Xe-135, and Xe-138 in noble gas releases and Mn-54, Fe-59, Co-58, Co-60, Zn-65, Mo-99, I-131, Cs-134, Cs-137, Ce-141 and Ce-144 in iodine and particulate releases. This list does not mean that only these nuclides are to be considered. Other gamma peaks that are identifiable, together with those of the above nuclides, shall also be analyzed and reported in the Annual Radioactive Effluent Release Report in accordance with Technical Specification 6.8.1.4 and Part A, Section 10.2 of the ODCM. Isotopes which are not detected should be reported as "not detected." Values determined to be below detectable levels are not used in dose calculations.

(3) Sampling and analysis shall also be performed following shutdown, startup, or a THERMAL POWER change exceeding 15 percent of RATED THERMAL POWER within a one hour period unless; 1) analysis shows that the DOSE EQUIVALENT I-131 concentrations in the primary coolant has not increased more than a factor of 3; 2) the noble gas activity monitor for the plant vent has not increased by more than a factor of 3. For containment purge, requirements apply only when purge is in operation.

(4) Tritium grab samples shall be taken at least once per 24 hours when the refueling canal is flooded.

(5) The ratio of the sample flow rate to the sampled stream flow rate shall be known for the time period covered by each dose or dose rate calculation made in accordance with Controls C.7.1.1, C.7.2.1, and C.7.3.1.

(6) Samples shall be changed at least once per seven (7) days and analyses shall be completed within 48 hours after changing, or after removal from sampler. Sampling shall also be performed at least once per 24 hours for at least seven (7) days following each shutdown, startup, or THERMAL POWER change exceeding 15 percent of RATED THERMAL POWER within a one-hour period and analyses shall be completed within 48 hours of changing. When samples collected for 24 hours are analyzed, the corresponding LLDs may be increased by a factor of 10. This requirement does not apply if 1) analysis shows that the DOSE EQUIVALENT I-131 concentration in the reactor coolant has not increased more than a factor of 3; and 2) the noble gas monitor shows that effluent activity has not increased more than a factor of 3.

(7) Samples shall be taken prior to start-up of condenser air removal system when there have been indications of a primary to secondary leak.

(8) Quarterly composite analysis requirements shall only be required when analysis for principal gamma emitters indicate positive radioactivity.

7.2 Dose - Noble Gases

CONTROLS

C.7.2.1 The air dose due to noble gases released in gaseous effluents to areas at and beyond the SITE BOUNDARY (see Technical Specification Figure 5.1-1) shall be limited to the following:

a. During any calendar quarter: Less than or equal to 5 mrads for gamma radiation and less than or equal to 10 mrads for beta radiation, and

b. During any calendar year: Less than or equal to 10 mrads for gamma radiation and less than or equal to 20 mrads for beta radiation.

APPLICABILITY: At all times.

ACTION:

With the calculated air dose from radioactive noble gases in gaseous effluents exceeding any of the above limits, prepare and submit to the Commission within 30 days, pursuant to Technical Specification 6.8.2, a Special Report that identifies the cause(s) for exceeding the limit(s) and defines the corrective actions that have been taken to reduce the releases and the proposed corrective actions to be taken to assure that subsequent releases will be in compliance with the above limits.

SURVEILLANCE REQUIREMENTS

S.7.2.1 Cumulative dose contributions for the current calendar quarter and current calendar year for noble gases shall be determined in accordance with the methodology and parameters in Part B of the ODCM at least once per 31 days.

This Control is provided to implement the requirements of Sections II.B, III.A, and IV.A of Appendix I to 10 CFR Part 50. The Control implements the guides set forth in Section I.B of Appendix I. The ACTION statements provide the required operating flexibility and at the same time implement the guides set forth in Section IV.A of Appendix I at the SITE BOUNDARY that the releases of radioactive material in gaseous effluents to UNRESTRICTED AREAS will be kept as low as reasonably achievable. The Surveillance Requirements implement the requirements in Section III.A of Appendix I that conformance with the guides of Appendix I be shown by calculational procedures based on models and data such that the actual exposure of a MEMBER OF THE PUBLIC through appropriate pathways is unlikely to be substantially underestimated. The dose calculation methodology and parameters established in the ODCM for calculating the doses due to the actual release rates of radioactive noble gases in gaseous effluents are consistent with the methodology provided in Regulatory Guide 1.109, "Calculation of Annual Doses to Man from Routine Releases of Reactor Effluents for the Purpose of Evaluating Compliance with 10 CFR Part 50, Appendix I," Revision 1, October 1977, and Regulatory Guide 1.111, "Methods for Estimating Atmospheric Transport and Dispersion of Gaseous Effluents in Routine Releases from Light-Water Cooled Reactors," Revision 1, July 1977. The ODCM equations provided for determining the air doses at and beyond the SITE BOUNDARY are based upon the historical average atmospheric conditions.

7.3 Dose - Iodine-131, Iodine-133, Tritium, and Radioactive Material in Particulate Form

CONTROLS

C.7.3.1 The dose to a MEMBER OF THE PUBLIC from Iodine-131, Iodine-133, tritium, and all radionuclides in particulate form with half-lives greater than 8 days in gaseous effluents released to areas at and beyond the SITE BOUNDARY (see Technical Specification Figure 5.1-1) shall be limited to the following:

a. During any calendar quarter: Less than or equal to 7.5 mrems to any organ, and

b. During any calendar year: Less than or equal to 15 mrems to any organ.

APPLICABILITY: At all times.

ACTION:

With the calculated dose from the release of Iodine-131, Iodine-133, tritium, and radionuclides in particulate form with half-lives greater than 8 days, in gaseous effluents exceeding any of the above limits, prepare and submit to the Commission within 30 days, pursuant to Technical Specification 6.8.2, a Special Report that identifies the cause(s) for exceeding the limit(s) and defines the corrective actions that have been taken to reduce the releases and the proposed corrective actions to be taken to assure that subsequent releases will be in compliance with the above limits.

SURVEILLANCE REQUIREMENTS

S.7.3.1 Cumulative dose contributions for the current calendar quarter and current calendar year for Iodine-131, Iodine-133, tritium, and radionuclides in particulate form with half-lives greater than 8 days shall be determined in accordance with the methodology and parameters in Part B of the ODCM at least once per 31 days.

This Control is provided to implement the requirements of Sections II.C, III.A, and IV.A of Appendix I to 10 CFR Part 50. The Controls are the guides set forth in Section II.C of Appendix I. The ACTION statements provide the required operating flexibility and at the same time implement the guides set forth in Section IV.A of Appendix I to assure that the releases of radioactive materials in gaseous effluents at the SITE BOUNDARY will be kept as low as reasonably achievable. The ODCM calculation methods specified in the Surveillance Requirements implement the requirements in Section III.A of Appendix I that conformance with the guides of Appendix I be shown by calculational procedures based on models and data such that the actual exposure of a MEMBER OF THE PUBLIC through appropriate pathways is unlikely to be substantially underestimated. The ODCM calculational methodology and parameters for calculating the doses due to the actual release rates of the subject materials are consistent with the methodology provided in Regulatory Guide 1.109, "Calculation of Annual Doses to Man from Routine Releases of Reactor Effluents for the Purpose of Evaluating Compliance with 10 CFR Part 50, Appendix I," Revision 1, October 1977, and Regulatory Guide 1.111, "Methods for Estimating Atmospheric Transport and Dispersion of Gaseous Effluents in Routine Releases from Light-Water Cooled Reactors," Revision 1, July 1977. These equations also provide for determining the actual doses based upon the historical Iodine-133, tritium, and radionuclides in particulate form with half-lives greater than 8 days are dependent upon the existing radionuclide pathways to man in the areas at and beyond the SITE BOUNDARY. The pathways that were examined in the development of the calculations were

(1) individual inhalation of airborne radionuclides,

(2) deposition of radionuclides onto green leafy vegetation with subsequent consumption by man,

(3) deposition of radionuclides onto grassy areas where milk animals and meat-producing animals graze followed by human consumption of that milk and meat, and

(4) deposition of radionuclides on the ground followed by subsequent human exposure.

7.4 Gaseous Radwaste Treatment System

CONTROLS

C.7.4.1 The VENTILATION EXHAUST TREATMENT SYSTEM and the GASEOUS RADWASTE TREATMENT SYSTEM shall be OPERABLE and appropriate portions of these system shall be used to reduce releases of radioactivity when the projected doses in 31 days due to gaseous effluent releases to areas at and beyond the SITE BOUNDARY (see Technical Specification Figure 5.1-1) would exceed

a. 0.2 mrad to air from gamma radiation, or

b. 0.4 mrad to air from beta radiation, or

c. 0.3 mrem to any organ of a MEMBER OF THE PUBLIC.

APPLICABILITY: At all times.

ACTION:

With radioactive gaseous waste being discharged without treatment and in excess of the above limits, prepare and submit to the Commission within 30 days, pursuant to Specification 6.8.2, a Special Report that includes the following information:

a. Identification of any inoperable equipment or subsystems, and the reason for the inoperability,

b. Action(s) taken to restore the inoperable equipment to OPERABLE status, and

c. Summary description of action(s) taken to prevent a recurrence.

SURVEILLANCE REQUIREMENTS

S.7.4.1 Doses due to gaseous releases from each unit to areas at and beyond the SITE BOUNDARY shall be projected at least once per 31 days in accordance with the methodology and parameters in Part B of the ODCM when Gaseous Radwaste Treatment Systems are not being fully utilized.

S.7.4.2 The installed VENTILATION EXHAUST TREATMENT SYSTEM and GASEOUS RADWASTE TREATMENT SYSTEM shall be considered OPERABLE by meeting Controls C.7.1.1, and C.7.2.1, or C.7.3.1.

The OPERABILITY of the GASEOUS RADWASTE TREATMENT SYSTEM and the VENTILATION EXHAUST TREATMENT SYSTEM ensures that the systems will be available for use whenever gaseous effluents require treatment prior to release to the environment. The requirement that the appropriate portions of these systems be used, when specified, provides reasonable assurance that the releases of radioactive materials in gaseous effluents will be kept as low as is reasonably achievable. This Control implements the requirements of 10 CFR 50.36a, General Design Criterion 60 of Appendix A to 10 CFR Part 50, and the design objectives given in Section II.D of Appendix I to 10 CFR Part 50. The specified limits governing the use of appropriate portions of the systems were specified as a suitable fraction of the dose design objectives set forth in Sections II.B and II.C of Appendix I to 10 CFR Part 50, for gaseous effluents.

8.0 TOTAL DOSE

CONTROL

C.8.1.1 The annual (calendar year) dose or dose commitment to any MEMBER OF THE PUBLIC due to releases of radioactivity and to radiation from uranium fuel cycle sources shall be limited to less than or equal to 25 mrems to the whole body or any organ, except the thyroid, which shall be limited to less than or equal to 75 mrems.

APPLICABILITY: At all times.

ACTION:

With the calculated doses from the release of radioactive materials in liquid or gaseous effluents exceeding twice the limits of Controls C.6.2.1.a, C.6.2.1.b, C.7.2.1.a, C.7.2.1.b, C.7.3.1.a, or C.7.3.1.b, calculations shall be made including direct radiation contributions from the units and from outside storage tanks to determine whether the above limits of Control C.8.1.1 have been exceeded. If such is the case, prepare and submit to the Commission within 30 days, pursuant to Technical Specification 6.8.2, a Special Report that defines the corrective action to be taken to reduce subsequent releases to prevent recurrence of exceeding the above limits and includes the schedule for achieving conformance with the above limits. This Special Report, as defined in 10 CFR 20.405(c), shall include an analysis that estimates the radiation exposure (dose) to a MEMBER OF THE PUBLIC from uranium fuel cycle sources, including all effluent pathways and direct radiation, for the calendar year that includes the release(s) covered by this report. It shall also describe levels of radiation and concentrations of radioactive material involved, and the cause of the exposure levels or concentrations. If the estimated dose(s) exceeds the above limits, and if the release condition resulting in violation of 40 CFR Part 190 has not already been corrected, the Special Report shall include a request for a variance in accordance with the provisions of 40 CFR Part 190. Submittal of the report is considered a timely request, and a variance is granted until staff action on the request is complete.

SURVEILLANCE REQUIREMENTS

S.8.1.1 Cumulative dose contributions from liquid and gaseous effluents shall be determined in accordance with Surveillance Requirement S.6.2.1, S.7.2.1, and S.7.3.1, and in accordance with the methodology and parameters in Part B of the ODCM.

S.8.1.2 Cumulative dose contributions from direct radiation from the units and from radwaste storage tanks shall be determined in accordance with the methodology and parameters in Part B of the ODCM. This requirement is applicable only under conditions set forth in ACTION a. of Control C.8.1.1.

This Control is provided to meet the dose limitations of 40 CFR Part 190 that have been incorporated into 10 CFR Part 20 by 46FR18525. The specification requires the preparation and submittal of a Special Report whenever the calculated doses due to releases of radioactivity and to radiation from uranium fuel cycle sources exceed 25 mrems to the whole body or any organ, except the thyroid, which shall be limited to less than or equal to 75 mrems. For sites containing up to four reactors, it is highly unlikely that the resultant dose to a MEMBER OF THE PUBLIC will exceed the dose limits of 40 CFR Part 190 if the individual reactors remain within twice the dose design objectives of Appendix I, and if direct radiation doses from the units (including outside storage tanks, etc.) are kept small. The Special Report will describe a course of action that should result in the limitation of the annual dose to a MEMBER OF THE PUBLIC to within the 40 CFR Part 190 limits. For the purposes of the Special Report, it may be assumed that the dose commitment to the MEMBER OF THE PUBLIC from other uranium fuel cycle sources is negligible, with the exception that dose contributions from other nuclear fuel cycle facilities at the same site are within a radius of 8 km must be considered. If the dose to any MEMBER OF THE PUBLIC is estimated to exceed the requirements of 40 CFR Part 190, the Special Report with a request for a variance (provided the release conditions resulting in violation of 40 CFR Part 190 have not already been corrected), in accordance with the provisions of 40 CFR 190.11 and 10 CFR 20.405c, is considered to be a timely request and fulfills the requirements of 40 CFR Part 190 until NRC staff action is completed. The variance only relates to the limits of 40 CFR Part 190, and does not apply in any way to the other requirements for dose limitation of 10 CFR Part 20, as addressed in Controls C.6.1.1 and C.7.1.1. An individual is not considered a MEMBER OF THE PUBLIC during any period in which he/she is engaged in carrying out any operation that is part of the nuclear fuel cycle.

9.0 RADIOLOGICAL ENVIRONMENTAL MONITORING

9.1 Monitoring Program

CONTROL

C.9.1.1 The Radiological Environmental Monitoring Program (REMP) shall be conducted as specified in Table A.9.1-1.

APPLICABILITY: At all times.

ACTION:

a. With the REMP not being conducted as specified in Table A.9.1-1, prepare and submit to the Commission, in the Annual Radiological Environmental Operating Report required by Technical Specification 6.8.1.3 and Part A, Section 10.1 of the ODCM, a description of the reasons for not conducting the program as required and the plans for preventing a recurrence.

b. With the level of radioactivity as the result of plant effluents in an environmental sampling medium at a specified location exceeding the reporting levels of Table A.9.1-3 when averaged over any calendar quarter, prepare and submit to the Commission within 30 days from receipt of the laboratory analyses, pursuant to Technical Specification 6.8.2, a Special Report that identifies the cause(s) for exceeding the limit(s) and defines the corrective actions to be taken to reduce radioactive effluents so that the potential annual dose* to a MEMBER OF THE PUBLIC is less than the calendar year limits of Control C.6.2.1, C.7.2.1, or C.7.3.1. When more than one of the radionuclides in the REMP are detected in the sampling medium, this report shall be submitted if

$$\frac{\text{concentration (1)}}{\text{reporting level (1)}} + \frac{\text{concentration (2)}}{\text{reporting level (2)}} + \ldots \geq 1.0$$

When radionuclides other than those listed in the REMP are detected and are the result of plant effluents, this report shall be submitted if the potential annual dose* to a MEMBER OF THE PUBLIC from all radionuclides is equal to or greater than the calendar year limits of Control C.6.2.1, C.7.2.1, or C.7.3.1. This report is not required if the measured level of radioactivity was not the result of plant effluents; however, in such an event, the condition shall be reported and described in the Annual Radiological Environmental Operating Report required by Technical Specification 6.8.1.3 and Part A, Section 10.1 of the ODCM.

---

*The methodology and parameters used to estimate the potential annual dose to a MEMBER OF THE PUBLIC shall be indicated in this report.

ACTION: (Continued)

With milk or fresh leafy vegetable samples unavailable from one or more of the sample locations required by the REMP, identify specific locations for obtaining replacement samples and add them within 30 days to the REMP given in the ODCM. The specific locations from which samples were unavailable may then be deleted from the monitoring program. Pursuant to Technical Specification 6.13, and Part A, Section 10.2, of the ODCM, submit in the next Annual Radioactive Effluent Release Report documentation for a change in the ODCM including a revised figure(s) and table for the ODCM reflecting the new location(s) with supporting information identifying the cause of the unavailability of samples and justifying the selection of the new locations(s) for obtaining samples.

SURVEILLANCE REQUIREMENTS

S.9.1.1 The radiological environmental monitoring samples shall be collected pursuant to Table A.9.1-1 from the specific locations given in the table and figure(s) in Part B of the ODCM, and shall be analyzed pursuant to the requirements of Table A.9.1-1 and the detection capabilities required by Table A.9.1-2.

BASES

The REMP required by this Control provides representative measurements of radiation and of radioactive materials in those exposure pathways and for those radionuclides that lead to the highest potential radiation exposures of MEMBERS OF THE PUBLIC resulting from the plant operation. This monitoring program implements Section IV.B.2 of Appendix I to 10 CFR Part 50, and thereby supplements the REMP by verifying that the measurable concentrations of radioactive materials and levels of radiation are not higher than expected on the basis of the effluent measurements and the modeling of the environmental exposure pathways. Guidance for this monitoring program is provided by the Radiological Assessment Branch Technical Position on Environmental Monitoring, Revision 1, November 1979. The initially specified monitoring program will be effective for at least the first 3 years of commercial operation. Following this period, program changes may be initiated based on operational experience.

Detailed discussion of the LLD and other detection limits can be found in Currie, L.A., "Lower Limit of Detection: Definition and Elaboration of a Proposed Position for Radiological Effluent and Environmental Measurements," NUREG/CR-4007 (September 1984).

TABLE A.9.1-1
RADIOLOGICAL ENVIRONMENTAL MONITORING PROGRAM

Exposure Pathway and/or Sample	Number of Representative Samples and Sample Locations[a]	Sampling and Collection Frequency	Type and Frequency of Analysis
1. DIRECT RADIATION[b]	40 routine monitoring stations with two or more dosimeters placed as follows: An inner ring of stations, one in each meteorological sector in the general area of the SITE BOUNDARY; An outer ring of stations, one in each meteorological sector, generally in the 6 to 8-km range from the site; The balance of the stations to be placed in special interest areas such as population centers, nearby residences, schools, and control locations.	Quarterly.	Gamma dose quarterly.
2. AIRBORNE Radioiodine and Particulates	Samples from five locations[d]: Three samples from close to the three SITE BOUNDARY locations, in different sectors, of high calculated long-term average ground-level D/Q. One sample from the vicinity of a community having the highest calculated long-term average ground-level D/Q.	Continuous sampler operation with sample collection biweekly (approx. 14 days), or more frequently if required by dust loading.	Radioiodine Canister: I-131 analysis biweekly (approx. 14 days). Particulate Sampler: Gross beta radioactivity analysis following filter change[c]; Gamma isotopic analysis[e] of composite (by location) quarterly.

TABLE A.9.1-1
RADIOLOGICAL ENVIRONMENTAL MONITORING PROGRAM
(Continued)

Exposure Pathway and/or Sample	Number of Representative Samples and Sample Locations[a]	Sampling and Collection Frequency	Type and Frequency of Analysis
2. (Continued)	One sample from a control location, as for example 15-30 km distant and in the least prevalent wind direction.		
3. WATERBORNE			
a. Surface	One sample in the discharge area. One sample from a control location.	Monthly grab sample.	Gamma isotopic analysis[e] monthly. Composite for tritium analysis quarterly.
b. Sediment from shoreline	One sample from area with existing or potential recreational value.	Semiannually.	Gamma isotopic analysis[e] semiannually.
4. INGESTION			
a. Milk	Samples from milking animals in three locations within 5 km distance having the highest dose potential. If there are none, then, one sample from milking animals in each of three areas between 5 to 8 km distant where doses are calculated to be greater than 1 mrem per yr.[f] One sample from milking animals at a control location, as for example, 15-30 km distant and in the least prevalent wind direction.	Semimonthly when milking animals are on pasture, monthly at other times.	Gamma isotopic[e] and I-131 analysis on each sample.

TABLE A.9.1-1
RADIOLOGICAL ENVIRONMENTAL MONITORING PROGRAM
(Continued)

Exposure Pathway and/or Sample	Number of Representative Samples and Sample Locations[a]	Sampling and Collection Frequency	Type and Frequency of Analysis
4. (Continued)			
b. Fish and Invertebrates	One sample of each of three commercially and recreationally important species in vicinity of plant discharge area.	Sample in season, or semiannually if they are not seasonal.	Gamma isotopic analysis[e] on edible portions.
	One sample of similar species in areas not influenced by plant discharge.		
c. Food Products	Samples of three (if practical) different kinds of broad leaf vegetation[g] grown nearest each of two different off-site locations of highest predicted long-term average ground-level D/Q if milk sampling is not performed. [h]	Monthly, when available.	Gamma isotopic[e] and I-131 analysis.
	One sample of each of the similar broad leaf vegetation[g] grown at a control location, as for example 15-30 km distant in the least prevalent wind direction, if milk sampling is not performed. [h]	Monthly, when available.	Gamma isotopic[e] and I-131 analysis.

TABLE A.9.1-1
RADIOLOGICAL ENVIRONMENTAL MONITORING PROGRAM
(Continued)

Table Notations

a. Specific parameters of distance and direction sector from the centerline of the Unit 1 reactor, and additional description where pertinent, shall be provided for each and every sample location in Table B.4-1 in the ODCM, Part B. Deviations are permitted from the required sampling schedule if specimens are unobtainable due to circumstances such as hazardous conditions, seasonal unavailability and malfunction of automatic sampling equipment. If specimens are unobtainable due to sampling equipment malfunction, effort shall be made to complete corrective action prior to the end of the next sampling period. All deviations from the sampling schedule shall be documented in the Annual Radiological Environmental Operating Report as specified in Part A, Section 10.1. It is recognized that, at times, it may not be possible or practicable to continue to obtain samples of the media of choice at the most desired location or time. In these instances suitable alternative media and locations may be chosen for the particular pathway in question and appropriate substitutions made within 30 days in the Radiological Environmental Monitoring Program. Identify the cause of the unavailability of samples for that pathway and identify the new location(s), if available, for obtaining replacement samples in the next Semiannual Radioactive Effluent Release Report as specified in Part A, Section 10.2 and also include in the report a revised figure(s) and table for the ODCM reflecting the new location(s).

b. A thermoluminescent dosimeter (TLD) is considered to be one phosphor; two or more phosphors in a packet are considered as two or more dosimeters.

c. Airborne particulate sample filters shall be analyzed for gross beta radioactivity 24 hours or more after sampling to allow for radon and thoron daughter decay. If gross beta activity in air particulate samples is greater than ten times the yearly mean of control samples, gamma isotopic analysis shall be performed on the individual samples.

d. Optimal air sampling locations are based not only on D/Q but on factors such as population in the area, year-round access to the site, and availability of power.

e. Gamma isotopic analysis means the identification and quantification of gamma-emitting radionuclides that may be attributable to the effluents from the facility.

f. The dose shall be calculated for the maximum organ and age group, using the methodology and parameters in the ODCM, Part B.

g. If broad leaf vegetation is unavailable, other vegetation will be sampled.

h. Vegetation samples may be taken in the general vicinity of the designated sample location, due to availability.

TABLE A.9.1-2

DETECTION CAPABILITIES FOR ENVIRONMENTAL SAMPLE ANALYSIS[a,f,g]

Lower Limit of Detection (LLD)[b]

Analysis	Water (pCi/kg)	Airborne Particulate or Gas (pCi/kg, wet)	Fish and Invertebrates (pCi/kg, wet)	Milk (pCi/kg)	Food Products (pCi/kg, wet)	Sediment (pCi/kg, dry)
Gross Beta	4	0.01				
H-3	3,000					
Mn-54	15		130			
Fe-59	30		260			
Co-58, 60	15		130			
Zn-65	30		260			
Zr-Nb-95	15[c]					
I-131	15	0.07		1	60[e]	
Cs-134	15	0.05	130	15	60	150
Cs-137	18	0.06	150	18	80	180
Ba-La-140	15[c,d]			15[c,d]		

TABLE A.9.1-2
DETECTION CAPABILITIES FOR ENVIRONMENTAL SAMPLE ANALYSIS
(Continued)

Table Notations

a. This list does not mean that only these nuclides are to be considered. Other peaks that are identifiable, together with those of the above nuclides, shall also be analyzed and reported in the Annual Radiological Environmental Operating Report.

b. The LLD is defined, for purposes of these specifications, as the smallest concentration of radioactive material in a sample that will yield a net count, above system background, that will be detected with 95% probability with only 5% probability of falsely concluding that a blank observation represents a "real" signal.

For a particular measurement system, which may include radiochemical separation:

$$LLD = \frac{4.66\,Sb}{E\,x\,V\,x\,2.22\,x10^{6}\;x\;Y\,x\exp(-\lambda\Delta t)}$$

Where:

LLD is the "a priori" lower limit of detection as defined above, as picocuries per unit mass or volume;

4.66 is a constant derived from the K_{alpha} and K_{beta} values for the 95% confidence level;

s_b is the standard deviation of the background counting rate or of the counting rate of a blank sample as appropriate, as counts per minute;

E is the counting efficiency, as counts per disintegration;

V is the sample size in units of mass or volume;

2.22 is the number of disintegrations per minute per picocurie;

Y is the fractional radiochemical yield, when applicable;

λ is the radioactive decay constant for the particular radionuclide as per second; and

Δ t for environmental samples is the elapsed time between sample collection and time of counting, as seconds.

Typical values of E, V, Y, and Δ t should be used in the calculation.

In calculating the LLD for a radionuclide determined by gamma ray spectrometry, the background shall include the typical contributions of other radionuclides normally present in the samples (e.g., Potassium-40 in milk samples).

TABLE A.9.1-2
DETECTION CAPABILITIES FOR ENVIRONMENTAL SAMPLE ANALYSIS
(Continued)

Table Notations
(Continued)

It should be recognized that the LLD is defined as an a priori (before the fact) limit representing the capability of a measurement system and not as an a posteriori (after the fact) limit for a particular measurement. This does not preclude the calculation of an a posteriori LLD for a particular measurement based upon the actual parameters for the sample in question and appropriate decay correction parameters such as decay while sampling and during analysis. Analyses shall be performed in such a manner that the stated LLDs will be achieved under routine conditions. Occasionally background fluctuations, unavoidable small sample sizes, the presence of interfering nuclides, or other uncontrollable circumstances may render these LLDs unachievable. In such cases, the contributing factors shall be identified and described in the Annual Radiological Environmental Operating Report per Part A, Section 10.1.

c. Parent only.

d. The Ba-140 LLD and concentration can be determined by the analysis of its short-lived daughter product La-140 subsequent to an eight-day period following collection. The calculation shall be predicated on the normal ingrowth equations for a parent-daughter situation and the assumption that any unsupported La-140 in the sample would have decayed to an insignificant amount (at least 3.6% of its original value). The ingrowth equations will assume that the supported La-140 activity at the time of collection is zero.

e. Broad leaf vegetation only.

f. If the measured concentration minus the three standard deviation uncertainty is found to exceed the specified LLD, the sample does not have to be analyzed to meet the specified LLD.

g. Required detection capabilities for thermoluminescent dosimeters used for environmental measurements shall be in accordance with recommendations of Regulatory Guide 4.13, Revision 1, July 1977.

TABLE A.9.1-3

REPORTING LEVELS FOR RADIOACTIVITY CONCENTRATIONS IN ENVIRONMENTAL SAMPLES

Analysis	Water (pCi/kg)	Airborne Particulate or Gas (pCi/kg, wet)	Fish and Invertebrates (pCi/kg, wet)	Milk (pCi/kg)	Food Products (pCi/kg, wet)
H-3	30,000***				
Mn-54	1,000		30,000		
Fe-59	400		10,000		
Co-58	1,000		30,000		
Co-60	300		10,000		
Zn-65	300		20,000		
Zr-Nb-95	400*				
I-131	100	0.9		3	100**
Cs-134	30	10	1,000	60	1,000
Cs-137	50	20	2,000	70	2,000
Ba-La-140	200*			300*	

* Parent only.
** Broad leaf vegetation only.
***Plant dewatering reporting level = 20,000 pCi/kg (2E-05 μCi/ml)

9.2 Land Use Census

CONTROL

C.9.2.1 A Land Use Census shall be conducted and shall identify within a distance of 8 km (5 miles) the location in each of the 16 meteorological sectors of the nearest milk animal, the nearest residence, and the nearest garden** of greater than 50 m^2 (500 ft^2) producing broad leaf vegetation.

APPLICABILITY: At all times.

ACTION

a. With a Land Use Census identifying a location(s) that yields a calculated dose or dose commitment greater than the values currently being calculated in Surveillance S.7.3.1 pursuant to Technical Specification 6.8.1.4 and Part A, Section 10.2, of the ODCM, identify the new location(s) in the next Annual Radioactive Effluent Release Report.

b. With a Land Use Census identifying a location(s) that yields a calculated dose or dose commitment (via the same exposure pathway) 20% greater than at a location from which samples are currently being obtained in accordance with Control C.9.1.1, add the new location(s) within 30 days to the REMP given in the ODCM, if permission from the owner to collect samples can be obtained and sufficient sample volume is available. The sampling location(s), excluding the Control station location, having the lowest calculated dose or dose commitment(s), via the same exposure pathway, may be deleted from this monitoring program after October 31 of the year in which this Land Use Census was conducted. Pursuant to Technical Specification 6.13 and Part A, Section 10.2 of the ODCM, submit in the next Annual Radioactive Effluent Release Report documentation for a change in the ODCM including a revised figure(s) and table(s) for the ODCM reflecting the new location(s) with information supporting the change in sampling locations.

SURVEILLANCE REQUIREMENTS

S.9.2.1 The Land Use Census shall be conducted during the growing season at least once per 12 months using a method such as by a door-to-door survey, aerial survey, or by consulting local agriculture authorities, as described in the ODCM. The results of the Land Use Census shall be included in the Annual Radiological Environmental Operating Report pursuant to Part A, Section 10.1 of the ODCM.

**Broad leaf vegetation sampling of at least three different kinds of vegetation may be performed at the SITE BOUNDARY in each of two different direction sectors with the highest predicted relative deposition values (D/Qs) in lieu of the garden census. Specifications for broad leaf vegetation sampling in the REMP shall be followed, including analysis of control samples.

This specification is provided to ensure that changes in the use of areas at and beyond the SITE BOUNDARY are identified and that modifications to the REMP given in the ODCM are made if required by the results of this census. Information from methods such as the door-to-door survey, from aerial survey, of from consulting with local agricultural authorities shall be used. This census satisfies the requirements of Section IV.B.3 of Appendix I to 10 CFR Part 50. Restricting the census to gardens of greater than 50 m^2 provides assurance that significant exposure pathways via leafy vegetables will be identified and monitored, since a garden of this size is the minimum required to produce the quantity (26 kg/year) of leafy vegetables assumed in Regulatory Guide 1.109 for consumption by a child. To determine this minimum garden size, the following assumptions were made: (1) 20% of the garden was used for growing broad-leaf vegetation (i.e., similar to lettuce and cabbage), and (2) there was a vegetation yield of 2 kg/m^2.

9.3 Interlaboratory Comparison Program

CONTROL

C.9.3.1 In accordance with Technical Specification 6.7.6h.3, analyses shall be performed on all radioactive materials supplied as part of an Interlaboratory Comparison Program, that has been approved by the Commission, that correspond to samples required by REMP.

APPLICABILITY: At all times.

ACTION:

With analyses not being performed as required above, report the corrective actions taken to prevent a recurrence to the Commission in the Annual Radiological Environmental Operating Report pursuant to Part A, Section 10.1 of the ODCM.

SURVEILLANCE REQUIREMENTS

S.9.3.1 The Interlaboratory Comparison Program shall be identified in Part B of the ODCM. A summary of the results obtained as part of the above required Interlaboratory Comparison Program shall be included in the Annual Radiological Environmental Operating Report pursuant to Part A, Section 10.1 of the ODCM.

BASES

The requirement for participation in an approved Interlaboratory Comparison Program is provided to ensure that independent checks on the precision and accuracy of the measurements of radioactive material in environmental sample matrices are performed as part of the Quality Assurance Program for environmental monitoring in order to demonstrate that the results are valid for the purposes of Section IV.B.2 of Appendix I to 10 CFR Part 50.

10.0 REPORTS

10.1 Annual Radiological Environmental Operating Report

Routine Annual Radiological Environmental Operating Reports covering the operation of the station during the previous calendar year shall be submitted prior to May 1 of each year pursuant to Technical Specification 6.8.1.3.

The Annual Radiological Environmental Operating Reports shall include summaries, interpretations, and an analysis of trends of the results of the radiological environmental Surveillance activities for the report period, including a comparison with preoperational studies, with operational Controls, as appropriate, and with previous environmental Surveillance reports, and an assessment of the observed impacts of the plant operation on the environment. The reports shall also include the results of the Land Use Census required by Control C.9.2.1.

The Annual Radiological Environmental Operating Reports shall include the results of analysis of all radiological environmental samples and of all environmental radiation measurements taken during the period pursuant to the locations specified in the table and figures in Part B of the ODCM, as well as summarized and tabulated results of these analyses and measurements in the format of the table in the Radiological Assessment Branch Technical Position, Revision 1, November 1979. In the event that some individual results are not available for inclusion with the report, the report shall be submitted noting and explaining the reasons for the missing results. The missing data shall be submitted as soon as possible in a supplementary report.

The reports shall also include the following: a summary description of the Radiological Environmental Monitoring Program; at least two legible maps**** covering all sampling locations keyed to a table giving distances and directions from the centerline of one reactor; the results of licensee participation in the Interlaboratory Comparison Program and the corrective action taken if the specified program is not being performed as required by Control C.9.3.1; reason for not conducting the Radiological Environmental Monitoring Program as required by Control C.9.1.1, and discussion of all deviations from the sampling schedule; discussion of environmental sample measurements that exceed the reporting levels but are not the result of plant effluents, pursuant to ACTION b. of Control C.9.1.1; and discussion of all analyses in which the LLD required was not achievable.

****One map shall cover locations near the SITE BOUNDARY; the more distant locations shall be covered by one or more additional maps.

10.2 Annual Radioactive Effluent Release Report

A routine Annual Radioactive Effluent Release Report covering the operation of the station during the previous calendar year of operation shall be submitted by May 1 of each year, pursuant to Technical Specification 6.8.1.4.

The Annual Radioactive Effluent Release Reports shall include a summary of the quantities of radioactive liquid and gaseous effluents and solid waste released from the station as outlined in Regulatory Guide 1.21, "Measuring, Evaluating, and Reporting Radioactivity in Solid Wastes and Releases of Radioactive Materials in Liquid and Gaseous Effluents from Light-Water-Cooled Nuclear Power Plants," Revision 1, June 1974, with data summarized on a quarterly basis following the format of Appendix B thereof. For solid wastes, the format for Table 3 in Appendix B shall be supplemented with three additional categories: class of solid wastes (as defined by 10 CFR Part 61), type of container (e.g., LSA, Type A, Type B, Large Quantity) and SOLIDIFICATION agent or absorbent (e.g., cement).

The Annual Radioactive Effluent Release Report shall include an annual summary of hourly meteorological data collected over the previous year. This annual summary may be either in the form of an hour-by-hour listing on magnetic tape of wind speed, wind direction, atmospheric stability, and precipitation (if measured), or in the form of joint frequency distributions of wind speed, wind direction, and atmospheric stability.***** This same report shall include an assessment of the radiation doses due to the radioactive liquid and gaseous effluents released from the unit or station during the previous calendar year. This same report shall also include an assessment of the radiation doses from radioactive liquid and gaseous effluents to MEMBERS OF THE PUBLIC due to their activities inside the SITE BOUNDARY Technical Specification (Figure 5.1-3) during the report period. All assumptions used in making these assessments, i.e., specific activity, exposure time, and location, shall be included in these reports. The meteorological conditions concurrent with the time of release of radioactive materials in gaseous effluents, as determined by sampling frequency and measurement, shall be used for determining the gaseous pathway doses. The assessment of radiation doses shall be performed in accordance with the methodology and parameters in the OFFSITE DOSE CALCULATION MANUAL (ODCM).

The Annual Radioactive Effluent Release Report shall also include an assessment of radiation doses to the likely most exposed MEMBER OF THE PUBLIC from reactor releases and other nearby uranium fuel cycle sources, including doses from primary effluent pathways and direct radiation, for the previous calendar year to show conformance with 40 CFR Part 190, "Environmental Radiation Protection Standards for Nuclear Power Operation." Acceptable methods for calculating the dose contribution from liquid and gaseous effluents are given in Regulatory Guide 1.109, Rev. 1, October 1977.

*****In lieu of submission with the Annual Radioactive Effluent Release Report, the licensee has the option of retaining this summary of required meteorological data on site in a file that shall be provided to the NRC upon request.

The Annual Radioactive Effluent Release Report shall include a list and description of unplanned releases from the site to UNRESTRICTED AREAS of radioactive materials in gaseous and liquid effluents made during the reporting period.

The Annual Radioactive Effluent Release Report shall include any changes made during the reporting period to the PROCESS CONTROL PROGRAM and the ODCM, pursuant to Technical Specifications 6.12 and 6.13, respectively, as well as any major change to Liquid, Gaseous, or Solid Radwaste Treatment Systems pursuant to Control 11.0. It shall also include a listing of new locations for dose calculations and/or environmental monitoring identified by the Land Use Census pursuant to Control C.9.2.

The Annual Radioactive Effluent Release Report shall also include a description of the events leading to liquid holdup tanks or gas storage tanks exceeding the limits of Technical Specification 3.11.1.4.

SEABROOK STATION ODCM

PART B

RADIOLOGICAL CALCULATIONAL METHODS AND PARAMETERS

1.0 INTRODUCTION

The Offsite Dose Calculation Manual (ODCM) contains details to implement Radioactive Effluent Controls and Environmental Monitoring Program as required by Technical Specifications 6.7.6g and 6.7.6h.

Part B of the ODCM provides formal and approved methods for the calculation of off-site concentration, off-site doses and effluent monitor setpoints, and indicates the locations of environmental monitoring stations in order to comply with the Seabrook Station Radioactive Effluent Controls Program (RECP), and Radiological Environmental Monitoring Program (REMP) detailed in Part A of the manual. The ODCM forms the basis for station procedures which document the off-site doses due to station operation which are used to show compliance with the numerical guides for design objectives of Section II of Appendix I to 10CFR Part 50. The methods contained herein follow accepted NRC guidance, unless otherwise noted in the text.

The references to 10 CFR Part 20 in Part B of the ODCM refer to revisions of 10 CFR Part 20 published prior to 1 January 1993. The decision to continue the use of the "old" version of 10 CFR Part 20 is based on an NRC letter dated June 30, 1993, from Thomas E. Murley to Thomas E. Tipton. For the convenience of the plant staff a copy of 10 CFR Part 20 (Rev. 1, January 1992) has been included in Appendix B.

1.1 Responsibilities for Part B

All changes to the ODCM shall be reviewed by the Station Operation Review Committee (SORC), approved by the Station Director, and documented in accordance with Technical Specification 6.13. The change process is controlled by the Applicability Determination Process as controlled by the 10 CFR 50.59 Resource Manual (5059RM). Changes made to Part B shall be submitted to the Commission for their information in the Annual Radioactive Effluent Release Report for the period in which the change(s) was made effective.

It shall be the responsibility of the Station Director to ensure that the ODCM is used in the performance of surveillance requirements and administrative controls in accordance with Technical Specifications 6.7.6g and 6.7.6h, and Effluent Control Program and Radiological Environmental Monitoring Program detailed in Part A of the manual.

In addition to off-site dose calculations for the demonstration of compliance with Technical Specification dose limits at and beyond the site boundary, 10 CFR 20.1302 requires that compliance with the dose limits for individual members of the public (100 mrem/yr total effective dose equivalent) be demonstrated in controlled areas on-site. Demonstration of compliance with the dose limits to members of the public in controlled areas is implemented per Health Physics Department Procedures, and is outside the scope of the ODCM. However, calculations performed in accordance with the ODCM can be used as one indicator of the need to perform an assessment of exposure to members of the public within the site boundary. Since external direct exposure pathways are already subject to routine exposure rate surveys and measurements, only the inhalation pathway need be assessed. The accumulated critical organ dose at the site boundary, as calculated per ODCM Part B Sections 3.9 and 3.11, can be used as an indicator of when additional assessments of on-site exposure to members of the public is advisable (see Section 3.11.2). Off-site critical organ doses from station effluents should not, however, be the only indicator of potential on-site doses.

1.2 Summary of Methods, Dose Factors, Limits, Constants, Variables and Definitions

This section summarizes the Method I dose equations which are used as the primary means of demonstrating compliance with RECP. The concentration and setpoint methods are identified in Table B.1-2 through Table B.1-7. Appendix C provides documentation for an alternate computerized option, designated as Method IA in the ODCM, for calculating doses necessary to demonstrate compliance with RECP. The Effluent Management System (EMS) software package used for this purpose is provided by Canberra Industries, Inc. Where more refined dose calculations are needed, the use of Method II dose determinations are described in Sections 3.2 through 3.9 and 3.11. The dose factors used in the equations are in Tables B.1-10 through B.1-14 and the Regulatory Limits are summarized in Table B.1-1.

The variables and special definitions used in this ODCM, Part B, are in Tables B.1-8 and B.1-9.

TABLE B.1-1

SUMMARY OF RADIOLOGICAL EFFLUENT PART A CONTROLS AND IMPLEMENTING EQUATIONS

Part A Control		Category	Method I[1]	Limit
C.6.1.1	Liquid Effluent Concentration	Total Fraction of ECL Excluding Noble Gases	Eq. 2-1	≤ 1.0
		Total Noble Gas Concentration	Eq. 2-2	$\leq 2 \times 10^{-4}$ µCi/ml
C.6.2.1	Liquid Effluent Dose	Total Body Dose	Eq. 3-1	≤ 1.5 mrem in a qtr.
				≤ 3.0 mrem in a yr.
		Organ Dose	Eq. 3-2	≤ 5 mrem in a qtr.
				≤ 10 mrem in a yr.
C.6.3.1	Liquid Radwaste Treatment Operability	Total Body Dose	Eq. 3-1	≤ 0.06 mrem in a mo.
		Organ Dose	Eq. 3-2	≤ 0.2 mrem in a mo.
C.7.1.1	Gaseous Effluents Dose Rate	Total Body Dose Rate from Noble Gases	Eq. 3-3	≤ 500 mrem/yr.
		Skin Dose Rate from Noble Gases	Eq. 3-4	≤ 3000 mrem/yr.
		Organ Dose Rate from I-131, I-133, Tritium and Particulates with $T_{1/2} > 8$ Days	Eq. 3-5	≤ 1500 mrem/yr.

TABLE B.1-1
SUMMARY OF RADIOLOGICAL EFFLUENT PART A CONTROLS AND IMPLEMENTING EQUATIONS
(Continued)

Part A Control		Category	Method I[1]	Limit
C.7.2.1	Gaseous Effluents Dose from Noble Gases	Gamma Air Dose from Noble Gases	Eq. 3-6	≤ 5 mrad in a qtr. ≤ 10 mrad in a yr.
		Beta Air Dose from Noble Gases	Eq. 3-7	≤ 10 mrad in a qtr. ≤ 20 mrad in a yr.
C.7.3.1	Gaseous Effluents Dose from I-131, I-133, Tritium, and Particulates	Organ Dose from Iodines, Tritium and Particulates with $T_{1/2}$ > 8 Days	Eq. 3-8	≤ 7.5 mrem in a qtr. ≤ 15 mrem in a yr.
C.7.4.1	Ventilation Exhaust Treatment	Organ Dose	Eq. 3-8	≤ 0.3 mrem in a mo.
C.8.1.1	Total Dose (from All Sources)	Total Body Dose	Footnote (2).	≤ 25 mrem in a yr.
		Organ Dose		≤ 25 mrem in a yr.
		Thyroid Dose		≤ 75 mrem in a yr.
C.5.1	Liquid Effluent Monitor Setpoint			
	Liquid Waste Test Tank Monitor	Alarm Setpoint	Eq. 5-1	Control C.6.1.1

TABLE B.1-1
SUMMARY OF RADIOLOGICAL EFFLUENT PART A CONTROLS AND IMPLEMENTING EQUATIONS
(Continued)

Part A Controls		Category	Method I[1]	Limit
C.5.2	Gaseous Effluent Monitor Setpoint			
	Plant Vent Wide Range Gas Monitors	Alarm/Trip Setpoint For Total Body Dose Rate	Eq. 5-9	Control C.7.1.1a (Total Body)
		Alarm/Trip Setpoint for Skin Dose Rate	Eq. 5-10	Control C.7.1.1a (Skin)

(1) More accurate methods may be available (see subsequent chapters).

(2) Part A Control C.8.1.1a requires this evaluation only if twice the limit of equations 3-1, 3-2, 3-12, 3-15 or 3-18 is reached. If this occurs a Method II calculation, using actual release point parameters with annual average or concurrent meteorology and identified pathways for a real individual, shall be made.

TABLE B.1-2
SUMMARY OF METHOD I EQUATIONS TO CALCULATE
UNRESTRICTED AREA LIQUID CONCENTRATIONS

Equation Number	Category	Equation
2-1	Total Fraction of ECL in Liquids, Except Noble Gases	$F_i^{ENG} = \sum_p \sum_i \frac{C_{pi}}{ECL_i} \leq 10$
2-2	Total Activity of Dissolved and Entrained Noble Gases from all Station Sources	$C_i^{NG}\left(\frac{\mu Ci}{ml}\right) = \sum_i C_i^{NG} \leq 2E\text{-}04$

TABLE B.1-3

SUMMARY OF METHOD I EQUATIONS TO CALCULATE OFF-SITE DOSES FROM LIQUID RELEASES

Equation Number	Category	Equation
3-1	Total Body Dose	$D_{tb}(\text{mrem}) = k \sum_i Q_i DFL_{itb}$
3-2	Maximum Organ Dose	$D_{mo}(\text{mrem}) = k \sum_i Q_i DFL_{imo}$

TABLE B.1-4

SUMMARY OF METHOD I EQUATIONS TO CALCULATE DOSE RATES

Category	Equation Number	Receptor Location[a]	Release Height[b]	Equation
Total Body Dose Rate From Noble Gases	3-3a	OS	E	$\dot{D}_{tb(e)} = 0.85 * \sum_i (\dot{Q}_i * DFB_i)$
	3-3b	OS	G	$\dot{D}_{tb(g)} = 3.4 * \sum_i (\dot{Q}_i * DFB_i)$
	3-3c	EC	E	$\dot{D}_{tbE(e)} = 0.0015 * \sum_i (\dot{Q}_i * DFB_i)$
	3-3d	EC	G	$\dot{D}_{tbE(g)} = 0.0074 * \sum_i (\dot{Q}_i * DFB_i)$
	3-3e	R	E	$\dot{D}_{tbR(e)} = 0.038 * \sum_i (\dot{Q}_i * DFB_i)$
	3-3f	R	G	$\dot{D}_{tbR(g)} = 0.2 * \sum_i (\dot{Q}_i * DFB_i)$

[a]OS = Off-Site, EC = Science & Nature Center, formerly the Education Center, R = The "Rocks"
[b]E = Elevated, G = Ground

TABLE B.1-4
SUMMARY OF METHOD I EQUATIONS TO CALCULATE DOSE RATES
(Continued)

Category	Equation Number	Receptor Location[a]	Release Height[b]	Equation
Skin Dose Rate From Noble Gases	3-4a	OS	E	$\dot{D}_{skin(e)} = \sum_i (\dot{Q}_i * DF'_{i(e)})$
	3-4b	OS	G	$\dot{D}_{skin(g)} = \sum_i (\dot{Q}_i * DF'_{i(g)})$
	3-4c	EC	E	$\dot{D}_{skinE(e)} = 0.0014 * \sum_i (\dot{Q}_i * DF'_{iE(e)})$
	3-4d	EC	G	$\dot{D}_{skinE(g)} = 0.0014 * \sum_i (\dot{Q}_i * DF'_{iE(g)})$
	3-4e	R	E	$\dot{D}_{skinR(e)} = 0.0076 * \sum_i (\dot{Q}_i * DF'_{iR(e)})$
	3-4f	R	G	$\dot{D}_{skinR(g)} = 0.0076 * \sum_i (\dot{Q}_i * DF'_{iR(g)})$

[a]OS = Off-Site, EC = Science & Nature Center, formerly the Education Center, R = The "Rocks"
[b]E = Elevated, G = Ground

TABLE B.1-4
SUMMARY OF METHOD I EQUATIONS TO CALCULATE DOSE RATES
(Continued)

Category	Equation Number	Receptor Location[a]	Release Height[b]	Equation
Critical Organ Dose Rate From I-131, I-133, H-3, and Particulate With $T_{1/2}$ >8 Days	3-5a	OS	E	$\dot{D}_{co(e)} = \sum_i (\dot{Q}_i * DFG'_{ico(e)})$
	3-5b	OS	G	$\dot{D}_{co(g)} = \sum_i (\dot{Q}_i * DFG'_{ico(g)})$
	3-5c	EC	E	$\dot{D}_{coE(e)} = 0.0014 * \sum_i (\dot{Q}_i * DFG'_{icoE(e)})$
	3-5d	EC	G	$\dot{D}_{coE(g)} = 0.0014 * \sum_i (\dot{Q}_i * DFG'_{icoE(g)})$
	3-5e	R	E	$\dot{D}_{coR(e)} = 0.0076 * \sum_i (\dot{Q}_i * DFG'_{icoR(e)})$
	3-5f	R	G	$\dot{D}_{coR(g)} = 0.0076 * \sum_i (\dot{Q}_i * DFG'_{icoR(g)})$

[a]OS = Off-Site, EC = Science & Nature Center, formerly the Education Center, R = The "Rocks"
[b]E = Elevated, G = Ground

TABLE B.1-5

SUMMARY OF METHOD I EQUATIONS TO CALCULATE DOSES TO AIR FROM NOBLE GASES

Category	Equation Number	Receptor Location[a]	Release Height[b]	Equation
Gamma Dose to Air From Noble Gases	3-6a	OS	E	$D^{\gamma}_{air(e)} = 3.2E\text{-}07 * t^{-0.275} * \sum_i (Q_i * DF^{\gamma}_i)$
	3-6b	OS	G	$D^{\gamma}_{air(g)} = 1.6E\text{-}06 * t^{-0.293} * \sum_i (Q_i * DF^{\gamma}_i)$
	3-6c	EC	E	$D^{\gamma}_{airE(e)} = 4.9E\text{-}10 * t^{-0.252} * \sum_i (Q_i * DF^{\gamma}_i)$
	3-6d	EC	G	$D^{\gamma}_{airE(g)} = 4.4E\text{-}09 * t^{-0.321} * \sum_i (Q_i * DF^{\gamma}_i)$
	3-6e	R	E	$D^{\gamma}_{airR(e)} = 5.1E\text{-}09 * t^{-0.155} * \sum_i (Q_i * DF^{\gamma}_i)$
	3-6f	R	G	$D^{\gamma}_{airR(g)} = 4.1E\text{-}08 * t^{-0.204} * \sum_i (Q_i * DF^{\gamma}_i)$

[a]OS = Off-Site, EC = Science & Nature Center, formerly the Education Center, R = The "Rocks"
[b]E = Elevated, G = Ground

TABLE B.1-5

SUMMARY OF METHOD I EQUATIONS TO CALCULATE DOSES TO AIR FROM NOBLE GASES

(Continued)

Category	Equation Number	Receptor Location[a]	Release Height[b]	Equation
Beta Dose to Air From Noble Gases	3-7a	OS	E	$D^{\beta}_{air(e)} = 4.1E\text{-}07 * t^{-0.3} * \sum_i (Q_i * DF^{\beta}_i)$
	3-7b	OS	G	$D^{\beta}_{air(g)} = 6.0E\text{-}06 * t^{-0.319} * \sum_i (Q_i * DF^{\beta}_i)$
	3-7c	EC	E	$D^{\beta}_{airE(e)} = 1.8E\text{-}09 * t^{-0.35} * \sum_i (Q_i * DF^{\beta}_i)$
	3-7d	EC	G	$D^{\beta}_{airE(g)} = 2.4E\text{-}08 * t^{-0.347} * \sum_i (Q_i * DF^{\beta}_i)$
	3-7e	R	E	$D^{\beta}_{airR(e)} = 3.9E\text{-}08 * t^{-0.249} * \sum_i (Q_i * DF^{\beta}_i)$
	3-7f	R	G	$D^{\beta}_{airR(g)} = 4.6E\text{-}07 * t^{-0.267} * \sum_i (Q_i * DF^{\beta}_i)$

[a]OS = Off-Site, EC = Science & Nature Center, formerly the Education Center, R = The "Rocks"
[b]E = Elevated, G = Ground

TABLE B.1-6
SUMMARY OF METHOD I EQUATIONS TO CALCULATE
DOSE TO AN INDIVIDUAL FROM TRITIUM, IODINE AND PARTICULATES

Category	Equation Number	Receptor Location[a]	Release Height[b]	Equation
Dose to Critical Organ From Iodines, Tritium, and Particulates	3-8a	OS	E	$D_{co(e)} = 14.8 * t^{-0.297} * \Sigma(Q_i * DFG_{ico(e)})$
	3-8b	OS	G	$D_{co(g)} = 17.7 * t^{-0.316} * \Sigma(Q_i * DFG_{ico(g)})$
	3-8c	EC	E	$D_{co\,E(e)} = 3.3\,E\text{-}02 * t^{-0.349} * \Sigma(Q_i * DFG_{ico\,E(e)})$
	3-8d	EC	G	$D_{co\,E(g)} = 3.3\,E\text{-}02 * t^{-0.347} * \Sigma(Q_i * DFG_{ico\,E(g)})$
	3-8e	R	E	$D_{co\,R(e)} = 7.3\,E\text{-}02 * t^{-0.248} * \Sigma(Q_i * DFG_{ico\,R(e)})$
	3-8f	R	G	$D_{co\,R(g)} = 8.6\,E\text{-}02 * t^{-0.267} * \Sigma(Q_i * DFG_{ico\,R(g)})$

[a]OS = Off-Site, EC = Science & Nature Center, formerly the Education Center, R = The "Rocks"
[b]E = Elevated, G = Ground

TABLE B.1-7
SUMMARY OF METHODS FOR
SETPOINT DETERMINATIONS

Equation Number	Category	Equation
5-1	Liquid Effluents: Liquid Waste Test Tank Monitor (RM-6509) (1)	$R_{setpoint}\left(\frac{\mu Ci}{ml}\right) = f_1 \frac{F_d}{F_m \times DF_{min_\gamma}} \Sigma C\gamma i$
5-23	PCCW Rate-of-Change Alarm	$RC_{set}(gph) = 1x10^{-8} \cdot SWF \cdot \frac{1}{PCC}$
	Gaseous Effluents:	
	Plant Vent Wide Range Gas Monitors (RM-6528-1, 2, 3)	
5-5	Total Body	$R_{tb}\ (\mu Ci/sec) = 588 \frac{1}{DFB_c} f_v$
5-6	Skin	$R_{skin}(\mu Ci/sec) = 3000 \frac{1}{DF_c'} f_v$

(1) This equation maybe used for other effluent radiation monitors, such as the CPS Rad Monitor (RM-6473) where the fraction of total FCL (f,) is administratively adjusted for the particular pathway.

TABLE B.1-8
SUMMARY OF VARIABLES

Variable		Definition	Units
C_{li}^{NG}	=	Concentration at point of discharge and entrained noble gas "i" in liquid pathways from all station sources	µCi/ml
C_{l}^{NG}	=	Total activity of all dissolved and entrained noble gases in liquid pathways from all station sources	µCi/ml
C_{di}	=	Concentration of radionuclide "i" at the point of liquid discharge	µCi/ml
C_i	=	Concentration of radionuclide "i"	µCi/ml
C_{pi}	=	Concentration, exclusive of noble gases, of radionuclide "i" from tank "p" at point of discharge	µCi/ml
$C_{\gamma i}$	=	Concentration of radionuclide "i" in mixture at the monitor	µCi/ml
$D_{air(e)}^{\beta}$	=	Off-site beta dose to air due to noble gases in elevated release	mrad
$D_{air(g)}^{\beta}$	=	Off-site beta dose to air due to noble gas in ground level release	mrad
$D_{airE(e)}^{\beta}$	=	Beta dose to air at Science & Nature Center due to noble gases in elevated release	mrad
$D_{airE(g)}^{\beta}$	=	Beta dose to air at Science & Nature Center due to noble gases in ground level release	mrad
$D_{airR(e)}^{\beta}$	=	Beta dosè to air at "Rocks" due to noble gases in elevated release	mrad
$D_{airR(g)}^{\beta}$	=	Beta dose to air at "Rocks" due to noble gases in ground level release	mrad
$D_{air(e)}^{\gamma}$	=	Off-site gamma dose to air due to noble gases in elevated release	mrad
$D_{air(g)}^{\gamma}$	=	Off-site gamma dose to air due to noble gases in ground level release	mrad
$D_{airE(e)}^{\gamma}$	=	Gamma dose to air at Science & Nature Center due to noble gases in elevated release	mrad
$D_{airE(g)}^{\gamma}$	=	Gamma dose to air at Science & Nature Center due to noble gases in ground level release	mrad
$D_{airR(e)}^{\gamma}$	=	Gamma dose to air at "Rocks" due to noble gases in elevated release	mrad

TABLE B.1-8
SUMMARY OF VARIABLES
(Continued)

Variable		Definition	Units
$D^{\gamma}_{airR(g)}$	=	Gamma dose to air at "Rocks" due to noble gases in ground level release	mrad
$D_{co(e)}$	=	Critical organ dose from an elevated release to an off-site receptor	mrem
$D_{co(g)}$	=	Critical organ dose from a ground level release to an off-site receptor	mrem
$D_{coE(e)}$	=	Critical organ dose from an elevated release to a receptor at the Science & Nature Center	mrem
$D_{coE(g)}$	=	Critical organ dose from a ground level release to a receptor at the Science & Nature Center	mrem
$D_{coR(e)}$	=	Critical organ dose from an elevated release to a receptor at the "Rocks"	mrem
$D_{coR(g)}$	=	Critical organ dose from a ground level release to a receptor at the "Rocks"	mrem
D_d	=	Direct dose	mrem
D^{γ}_{finite}	=	Gamma dose to air, corrected for finite cloud	mrad
D_{mo}	=	Dose to the maximum organ	mrem
D^S	=	Dose to skin from beta and gamma	mrem
D_{tb}	=	Dose to the total body	mrem
DF_{min}	=	Minimum required dilution factor based on all (beta – emitting and gamma – emitting) radionuclides	ratio
$DF_{min\gamma}$	=	Minimum required dilution factor necessary to ensure that the sum of the ratios for the concentration of each gamma-emitting radionuclide to the respective ECL value is not greater than 1 (dimensionless).	
DF'_i	=	Composite skin dose factor for off-site receptor	mrem-sec/μCi-yr
DF'_{iE}	=	Composite skin dose factor for Science & Nature Center	mrem-sec/μCi-yr
DF'_{iR}	=	Composite skin dose factor for the "Rocks"	mrem-sec/μCi-yr
DFB_i	=	Total body gamma dose factor for nuclide "i" (Table B.1-10)	$\frac{mrem^3}{pCi\text{-}yr}$

TABLE B.1-8
SUMMARY OF VARIABLES
(Continued)

Variable		Definition	Units
DFB_c	=	Composite total body dose factor	$\frac{mrem^3}{pCi\text{-}yr}$
DFL_{itb}	=	Site-specific, total body dose factor for a liquid release of nuclide "i" (Table B.1-11)	mrem/µCi1
DFL_{imo}	=	Site-specific, maximum organ dose factor for a liquid release of nuclide "i" (Table B.1-11)	mrem/µCi
$DFB_{ico(e)}$	=	Site-specific, critical organ dose factor for an elevated gaseous release of nuclide "i" (Table B.1-12)	mrem/µCi
$DFG_{ico(g)}$	=	Site-specific critical organ dose factor for a ground level release of nuclide "i" (Table B.1-12)	mrem/µCi
$DFG_{icoE(e)}$	=	Science & Nature Center-specific critical organ dose factor for an elevated release of nuclide "i" (Table B.1-14)	mrem/µCi
$DFG_{icoE(g)}$	=	Science & Nature Center-specific critical organ dose factor for a ground level release of nuclide "i" (Table B.1-14)	mrem/µCi
$DFG_{icoR(e)}$	=	The "Rocks"-specific critical organ dose factor for an elevated release of nuclide "i" (Table B.1-15)	mrem/µCi
$DFG_{icoR(g)}$	=	The "Rocks"-specific critical dose factor for a ground level release of nuclide "i" (Table B.1-15)	mrem/µCi
$DFG'_{ico(e)}$	=	Site-specific critical organ dose rate factor for an elevated gaseous release of nuclide "i" (Table B.1-12)	mrem-sec/µCi-yr
$DFG'_{ico(g)}$	=	Site-specific critical organ dose rate factor for a ground level release of nuclide "i" (Table B.1-12)	mrem-sec/µCi-yr
$DFG'_{icoE(e)}$	=	Science & Nature Center-specific critical organ dose rate factor for an elevated release of nuclide "i" (Table B.1-14)	mrem-sec/µCi-yr
$DFG'_{icoE(g)}$	=	Science & Nature Center-specific critical organ dose rate factor for a ground level release of nuclide "i" (Table B.1-14)	mrem-sec/µCi-yr
$DFG'_{icoR(e)}$	=	The "Rocks"-specific critical organ dose rate factor for an elevated release of nuclide "i" (Table B.1-15)	mrem-sec/µCi-yr
$DFG'_{icoR(g)}$	=	The "Rocks"-specific critical organ dose rate factor for a ground level release of nuclide "i" (Table B.1-15)	mrem-sec/µCi-yr

TABLE B.1-8
SUMMARY OF VARIABLES
(Continued)

Variable		Definition	Units
DFS_i	=	Beta skin dose factor for nuclide "i" (Table B.1-10)	$\frac{mrem\text{-}m^3}{pCi\text{-}yr}$
DF'_i	=	Combined skin dose factor for nuclide "i" (Table B.1-10)	mrem- sec/μCi-yr
DF_i^{γ}	=	Gamma air dose factor for nuclide "i" (Table B.1-10)	$\frac{mrad\text{-}m^3}{pCi\text{-}yr}$
DF_i^{β}	=	Beta air dose factor for nuclide "i" (Table B.1-10)	$\frac{mrad\text{-}m^3}{pCi\text{-}yr}$
$\dot{D}_{co(e)}$	=	Critical organ dose rate to an off-site receptor due to elevated release of iodines, tritium, and particulates	$\frac{mrem}{yr}$
$\dot{D}_{co(g)}$	=	Critical organ dose rate to an off-site receptor due to ground level release of iodines, tritium, and particulates	$\frac{mrem}{yr}$
$\dot{D}_{coE(e)}$	=	Critical organ dose rate to a receptor at the Science & Nature Center due to an elevated release of iodines, tritium, and particulates	$\frac{mrem}{yr}$
$\dot{D}_{coE(g)}$	=	Critical organ dose rate to a receptor at the Science & Nature Center due to a ground level release of iodines, tritium, and particulates	$\frac{mrem}{yr}$
$\dot{D}_{coR(e)}$	=	Critical organ dose rate to a receptor at the "Rocks" due to an elevated release of iodines, tritium, and particulates	$\frac{mrem}{yr}$
$\dot{D}_{coR(g)}$	=	Critical organ dose rate to a receptor at the "Rocks" due to a ground level release of iodines, tritium, and particulates	$\frac{mrem}{yr}$
$\dot{D}_{skin(e)}$	=	Skin dose rate to an off-site receptor due to noble gases in an elevated release	$\frac{mrem}{yr}$
$\dot{D}_{skin(g)}$	=	Skin dose rate to an off-site receptor due to noble gases in a ground level release	$\frac{mrem}{yr}$
$\dot{D}_{skinE(e)}$	=	Skin dose rate to a receptor at the Science & Nature Center due to noble gases in an elevated release	$\frac{mrem}{yr}$
$\dot{D}_{skinE(g)}$	=	Skin dose rate to a receptor at the Science & Nature Center due to noble gases in a ground level release	$\frac{mrem}{yr}$

TABLE B.1-8
SUMMARY OF VARIABLES
(Continued)

Variable		Definition	Units
$\dot{D}_{skinR(e)}$	=	Skin dose rate to a receptor at the "Rocks" due to noble gases in an elevated release	$\frac{mrem}{yr}$
$\dot{D}_{skinR(g)}$	=	Skin dose rate to a receptor at the "Rocks" due to noble gases in a ground level release	$\frac{mrem}{yr}$
$\dot{D}_{tb(e)}$	=	Total body dose rate to an off-site receptor due to noble gases in an elevated release	$\frac{mrem}{yr}$
$\dot{D}_{tb(g)}$	=	Total body dose rate to an off-site receptor due to noble gases in a ground level release	$\frac{mrem}{yr}$
$\dot{D}_{tbE(e)}$	=	Total body dose rate to a receptor at the Science & Nature Center due to noble gases in an elevated release	$\frac{mrem}{yr}$
$\dot{D}_{tbE(g)}$	=	Total body dose rate to a receptor at the Science & Nature Center due to noble gases in a ground level release	$\frac{mrem}{yr}$
$\dot{D}_{tbR(e)}$	=	Total body dose rate to a receptor at the "Rocks" due to noble gases in an elevated release	$\frac{mrem}{yr}$
$\dot{D}_{tbR(g)}$	=	Total body dose rate to a receptor at the "Rocks" due to noble gases in a ground level release	$\frac{mrem}{yr}$
D/Q	=	Deposition factor for dry deposition of elemental radioiodines and other particulates	$\frac{1}{m^2}$
ECL_i	=	Effluent concentration limit (ECL) for radionuclide "i" (excluding dissolved and entrained noble gas) as specified in 10 CFR 20, Appendix B, Table 2.	μCi/ml
f_v	=	The fraction of the offsite limiting total body dose rate administratively assigned to the plant vent release	Dimensionless
F_d	=	Actual or estimated flow rate out of discharge tunnel	gpm or ft^3/sec
F_m	=	Flow rate past liquid waste test tank monitor	gpm
F_{max}	=	Maximum allowable discharge flow rate from liquid test tanks based on all (beta – emitting and gamma – emitting) radionuclides	gpm
$F_{max\gamma}$	=	Maximum allowable discharge flow rate from the test tank past the monitor which would equate to the control concentration limit for the gamma radioactivity mixture determined to be in the test tank	gpm

TABLE B.1-8
SUMMARY OF VARIABLES
(Continued)

Variable		Definition	Units
f_g	=	The fraction of the offsite limiting total body dose rate administratively assigned to monitored ground level release	Dimensionless
F	=	Flow rate past plant vent monitor	$\frac{cc}{sec}$
f_{gland}	=	Release reduction factor to be administratively assigned to account for potential unmonitored contributions from the Turbine Gland Seal Exhaust	Dimensionless
f_1; f_2; f_3; f_4; f_5	=	Fraction of total ECL associated with Paths 1, 2, 3, 4, and 5, the sum of which is ≤ 1.	Dimensionless
F_1^{ENG}	=	Total fraction of ECL in liquid pathways (excluding noble gases)	Dimensionless
MPC_i	=	Maximum permissible concentration for radionuclide "i" ("old" 10 CFR 20, Appendix B, Table II, Column 2)	μCi/cc
Q_i	=	Release to the environment for radionuclide "i"	curies, or μ curies
$\dot{Q}_i$	=	Release rate to the environment for radionuclide "i"	μCi/sec
$R_{setpoint}$	=	Liquid monitor response for the limiting concentration at the point of discharge	μCi/ml
R_{skin}	=	Response of the noble gas monitor to limiting total body dose rate	cpm, or μCi/sec
R_{tb}	=	Response of the noble gas monitor to limiting total body dose rate	cpm, or μCi/sec
S_F	=	Shielding factor	Dimensionless
S_g	=	Detector counting efficiency from the gas monitor calibration	$\frac{cpm}{\mu Ci\text{-}cc}$ or $\frac{mR/hr}{\mu Ci/cc}$
S_{gi}	=	Detector counting efficiency for noble gas "i"	$\frac{cpm}{\mu Ci\text{-}cc}$ or $\frac{mR/hr}{\mu Ci/cc}$
S_l	=	Detector counting efficiency from the liquid monitor calibration	cps/μCi/ml
S_{li}	=	Detector counting efficiency for radionuclide "i"	cps/μCi/ml
X/Q	=	Average long-term undepleted atmospheric dispersion factor (Tables B.7-4, B.7-5, and B.7-6)	$\frac{sec}{m^3}$

TABLE B.1-8
SUMMARY OF VARIABLES
(Continued)

Variable		Definition	Units
$[X/Q]\gamma$	=	Effective long-term average gamma atmospheric dispersion factor (Tables B.7-4, B.7-5, and B.7-6)	$\frac{sec}{m^3}$
SWF	=	Service Water System flow rate	gph
PCC	=	Primary component cooling water measured (decay corrected) gross radioactivity concentration	μCi/ml
t^{-a}	=	Unitless factor which adjusts the value of atmospheric dispersion factors for elevated or ground-level releases with a total release duration of t hours	Dimensionless

TABLE B.1-9
DEFINITION OF TERMS

Critical Receptor - A hypothetical or real individual whose location and behavior cause him or her to receive a dose greater than any other possible real individual.

Dose - As used in Regulatory Guide 1.109, the term "dose," when applied to individuals, is used instead of the more precise term "dose equivalent," as defined by the International Commission on Radiological Units and Measurements (ICRU). When applied to the evaluation of internal deposition or radioactivity, the term "dose," as used here, includes the prospective dose component arising from retention in the body beyond the period of environmental exposure, i.e., the dose commitment. The dose commitment is evaluated over a period of 50 years. The dose is measured in mrem to tissue or mrad to air.

Dose Rate - The rate for a specific averaging time (i.e., exposure period) of dose accumulation.

Liquid Radwaste Treatment System - The components or subsystems which comprise the available treatment system as shown in Figure B.6-1.

TABLE B.1-10

DOSE FACTORS SPECIFIC FOR SEABROOK STATION FOR NOBLE GAS RELEASES

Radio-nuclide	Gamma Total Body Dose Factor DFB_i $(\frac{mrem\text{-}m^3}{pCi\text{-}yr})$	Beta Skin Dose Factor DFS_i $(\frac{mrem\text{-}m^3}{pCi\text{-}yr})$	Combined Skin Dose Factor for Elevated Release Points $DF'_{i(e)}$ $(\frac{mrem\text{-}sec}{\mu Ci\text{-}yr})$	Combined Skin Dose Factor for Ground Level Release Points $DF'_{i(g)}$ $(\frac{mrem\text{-}sec}{\mu Ci\text{-}yr})$	Beta Air Dose Factor DF_i^{β} $(\frac{mrad\text{-}m^3}{pCi\text{-}yr})$	Gamma Air Dose Factor DF_i^{γ} $(\frac{mrad\text{-}m^3}{pCi\text{-}yr})$
Ar-41	8.84E-03	2.69E-03	1.09E-02	6.20E-02	3.28E-03	9.30E-03
Kr-83m	7.56E-08	-----	1.81E-05	7.28E-05	2.88E-04	1.93E-05
Kr-85m	1.17E-03	1.46E-03	2.35E-03	1.92E-02	1.97E-03	1.23E-03
Kr-85	1.61E-05	1.34E-03	1.11E-03	1.35E-02	1.95E-03	1.72E-05
Kr-87	5.92E-03	9.73E-03	1.38E-02	1.21E-01	1.03E-02	6.17E-03
Kr-88	1.47E-02	2.37E-03	1.62E-02	8.10E-02	2.93E-03	1.52E-02
Kr-89	1.66E-02	1.01E-02	2.45E-02	1.66E-01	1.06E-02	1.73E-02
Kr-90	1.56E-02	7.29E-03	2.13E-02	1.34E-01	7.83E-03	1.63E-02
Xe-131m	9.15E-05	4.76E-04	5.37E-04	5.35E-03	1.11E-03	1.56E-04
Xe-133m	2.51E-04	9.94E-04	1.12E-03	1.12E-02	1.48E-03	3.27E-04
Xe-133	2.94E-04	3.06E-04	5.83E-04	4.39E-03	1.05E-03	3.53E-04
Xe-135m	3.12E-03	7.11E-04	3.74E-03	1.98E-02	7.39E-04	3.36E-03
Xe-135	1.81E-03	1.86E-03	3.33E-03	2.58E-02	2.46E-03	1.92E-03
Xe-137	1.42E-03	1.22E-02	1.14E-02	1.28E-01	1.27E-02	1.51E-03
Xe-138	8.83E-03	4.13E-03	1.20E-02	7.60E-02	4.75E-03	9.21E-03

8.84E-03 = 8.84×10^{-3}

TABLE B.1-11
DOSE FACTORS SPECIFIC FOR SEABROOK STATION
FOR
LIQUID RELEASES

Radionuclide	Total Body Dose Factor DFL_{itb} $(\frac{mrem}{\mu Ci})$	Maximum Organ Dose Factor DFL_{imo} $(\frac{mrem}{\mu Ci})$
H-3	3.02E-13	3.02E-13
Na-24	1.38E-10	1.42E-10
Cr-51	1.83E-11	1.48E-09
Mn-54	5.15E-09	2.68E-08
Fe-55	1.26E-08	7.67E-08
Fe-59	8.74E-08	6.66E-07
Co-58	2.46E-09	1.40E-08
Co-60	6.15E-08	9.22E-08
Zn-65	2.73E-07	5.49E-07
Br-83	1.30E-14	1.89E-14
Rb-86	4.18E-10	6.96E-10
Sr-89	2.17E-10	7.59E-09
Sr-90	3.22E-08	1.31E-07
Nb-95	5.25E-10	1.58E-06
Mo-99	3.72E-11	2.67E-10
Tc-99m	5.22E-13	1.95E-12
Ag-110m	1.01E-08	6.40E-07
Sb-124	1.71E-09	9.89E-09
Sb-125	6.28E-09	8.31E-09
Te-127m	7.07E-08	1.81E-06
Te-127	3.53E-10	9.54E-08
Te-129m	1.54E-07	3.46E-06
Te-129	7.02E-14	1.05E-13
Te-131m	3.16E-08	2.94E-06
Te-132	9.06E-08	3.80E-06
I-130	2.75E-11	3.17E-09
I-131	2.30E-10	1.00E-07
I-132	6.28E-11	6.36E-11
I-133	3.85E-11	1.15E-08
I-134	1.19E-12	1.41E-12
I-135	5.33E-11	4.69E-10
Cs-134	3.24E-08	3.56E-08
Cs-136	2.47E-09	3.27E-09
Cs-137	3.58E-08	4.03E-08
Ba-140	1.70E-10	3.49E-09
La-140	1.07E-10	4.14E-08
Ce-141	3.85E-11	9.31E-09
Ce-144	1.96E-10	6.46E-08
Other*	3.12E-08*	1.58E-06*

* Dose factors to be used in Method I calculation for any "other" detected gamma emitting radionuclide which is not included in the above list.

TABLE B.1-12

DOSE AND DOSE RATE FACTORS SPECIFIC FOR SEABROOK STATION FOR IODINES, TRITIUM AND PARTICULATE RELEASES

Radio-nuclide	Critical Organ Dose Factor for Elevated Release Point $DFG_{ico(e)}$ $(\frac{mrem}{\mu Ci})$	Critical Organ Dose Factor for Ground Level Release Point $DFG_{ico(g)}$ $(\frac{mrem}{\mu Ci})$	Critical Organ Dose Rate Factor for Elevated Release Point $DFG'_{ico(e)}$ $(\frac{mrem\text{-}sec}{yr\text{-}\mu Ci})$	Critical Organ Dose Rate Factor for Ground Level Release Point $DFG'_{ico(g)}$ $(\frac{mrem\text{-}sec}{yr\text{-}\mu Ci})$
H-3	3.08E-10	3.76E-09	9.71E-03	1.19E-01
Cr-51	8.28E-09	2.89E-08	2.91E-01	1.01E+00
Mn-54	1.11E-06	3.79E-06	4.38E+01	1.50E+02
Fe-59	1.06E-06	3.65E-06	3.53E+01	1.21E+02
Co-58	5.56E-07	1.91E-06	2.00E+01	6.88E+01
Co-60	1.21E-05	4.12E-05	5.42E+02	1.85E+03
Zn-65	2.33E-06	7.93E-06	7.82E+01	2.66E+02
Sr-89	1.98E-05	6.73E-05	6.24E+02	2.12E+03
Sr-90	7.21E-04	2.47E-03	2.27E+04	7.79E+04
Zr-95	1.10E-06	3.77E-06	3.63E+01	1.24E+02
Nb-95	2.01E-06	6.86E-06	6.40E+01	2.20E+02
Mo-99	1.63E-08	1.10E-07	5.39E-01	3.56E+00
Ru-103	3.03E-06	1.04E-05	9.62E+01	3.31E+02
Ag-110m	5.02E-06	1.72E-05	1.80E+02	6.15E+02
Sb-124	1.83E-06	6.28E-06	6.15E+01	2.11E+02
I-131	1.47E-04	5.04E-04	4.64E+03	1.59E+04
I-133	1.45E-06	5.72E-06	4.57E+01	1.80E+02
Cs-134	5.62E-05	1.91E-04	1.81E+03	6.18E+03
Cs-137	5.47E-05	1.86E-04	1.79E+03	6.09E+03
Ba-140	1.55E-07	6.39E-07	5.01E+00	2.06E+01
Ce-141	2.65E-07	9.28E-07	8.45E+00	2.96E+01
Ce-144	6.09E-06	2.09E-05	1.93E+02	6.62E+02
Other*	4.09E-06	1.39E-05	1.29E+02	4.38E+02

* Dose factors to be used in Method I calculations for any "other" detected gamma emitting radionuclide which is not included in the above list.

TABLE B.1-13

COMBINED SKIN DOSE RATE FACTORS SPECIFIC FOR SEABROOK STATION SPECIAL RECEPTORS[1] FOR NOBLE GAS RELEASE

Radio-nuclide	Science & Nature Center Combined Skin Dose Rate Factor for Elevated Release Point $DF'_{iE(e)}$ $(\frac{mrem\text{-}sec}{\mu Ci\text{-}yr})$	Science & Nature Center Combined Skin Dose Rate Factor for Ground Level Release Point $DF'_{iE(g)}$ $(\frac{mrem\text{-}sec}{\mu Ci\text{-}yr})$	The "Rocks" Combined Skin Dose Rate Factor for Elevated Release Point $DF'_{iR(e)}$ $(\frac{mrem\text{-}sec}{\mu Ci\text{-}yr})$	The "Rocks" Combined Skin Dose Rate Factor for Ground Level Release Point $DF'_{iR(g)}$ $(\frac{mrem\text{-}sec}{\mu Ci\text{-}yr})$
Ar-41	1.57E-02	1.17E-01	9.73E-02	6.99E-01
Kr-83m	2.35E-05	1.13E-04	1.07E-04	5.57E-04
Kr-85m	3.84E-03	4.08E-02	3.16E-02	2.69E-01
Kr-85	2.16E-03	3.09E-02	2.29E-02	2.15E-01
Kr-87	2.31E-02	2.60E-01	2.00E-01	1.73E+00
Kr-88	2.23E-02	1.44E-01	1.25E-01	8.18E-01
Kr-89	3.73E-02	3.34E-01	2.68E-01	2.12E+00
Kr-90	3.15E-02	2.64E-01	2.14E-01	1.64E+00
Xe-131m	9.52E-04	1.19E-02	8.96E-03	8.07E-02
Xe-133m	1.99E-03	2.48E-02	1.87E-02	1.68E-01
Xe-133	9.20E-04	9.11E-03	7.16E-03	5.91E-02
Xe-135m	5.24E-03	3.61E-02	3.07E-02	2.11E-01
Xe-135	5.32E-03	5.41E-02	4.23E-02	3.53E-01
Xe-137	2.14E-02	2.89E-01	2.16E-01	2.00E+00
Xe-138	1.78E-02	1.49E-01	1.21E-01	9.27E-01

[1] See Seabrook Station Technical Specification Figure 5.1-1.

TABLE B.1-14

DOSE AND DOSE RATE FACTORS SPECIFIC FOR THE SCIENCE & NATURE CENTER FOR IODINE, TRITIUM, AND PARTICULATE RELEASES

Radio-nuclide	Critical Organ Dose Factor for Elevated Release Point $DFG_{icoE(e)}$ $(\frac{mrem}{\mu Ci})$	Critical Organ Dose Factor for Ground Level Release Point $DFG_{icoE(g)}$ $(\frac{mrem}{\mu Ci})$	Critical Organ Dose Rate Factor for Elevated Release Point $DFG'_{icoE(e)}$ $(\frac{mrem\text{-}sec}{\mu Ci\text{-}yr})$	Critical Organ Dose Rate Factor for Ground Level Release Point $DFG'_{icoE(g)}$ $(\frac{mrem\text{-}sec}{\mu Ci\text{-}yr})$
H-3	6.45E-11	9.27E-10	2.03E-03	2.92E-02
Cr-51	4.98E-09	2.88E-08	2.12E-01	1.11E+00
Mn-54	1.39E-06	5.71E-06	6.24E+01	2.39E+02
Fe-59	3.09E-07	1.89E-06	1.29E+01	7.16E+01
Co-58	3.89E-07	2.10E-06	1.72E+01	8.26E+01
Co-60	2.17E-05	8.03E-05	9.78E+02	3.63E+03
Zn-65	7.34E-07	3.19E-06	3.31E+01	1.33E+02
Sr-89	1.15E-07	1.61E-06	3.63E+00	5.08E+01
Sr-90	5.14E-06	7.19E-05	1.62E+02	2.27E+03
Zr-95	3.38E-07	2.57E-06	1.35E+01	9.15E+01
Nb-95	1.53E-07	9.35E-07	6.43E+00	3.53E+01
Mo-99	1.62E-08	1.92E-07	5.58E-01	6.21E+00
Ru-103	1.30E-07	8.64E-07	5.33E+00	3.19E+01
Ag-110m	3.43E-06	1.54E-05	1.55E+02	6.34E+02
Sb-124	6.96E-07	4.46E-06	2.89E+01	1.67E+02
I-131	7.79E-07	1.08E-05	2.47E+01	3.41E+02
I-133	1.84E-07	2.56E-06	5.83E+00	8.11E+01
Cs-134	6.83E-06	2.53E-05	3.08E+02	1.14E+03
Cs-137	1.03E-05	3.81E-05	4.64E+02	1.72E+03
Ba-140	1.14E-07	1.42E-06	3.85E+00	4.54E+01
Ce-141	4.09E-08	4.51E-07	1.45E+00	1.48E+01
Ce-144	6.95E-07	9.11E-06	2.27E+01	2.90E+02
Other*	2.26E-06	9.24E-06	1.02E+02	3.91E+02

* Dose factors to be used in Method I calculations for any "other" detected gamma emitting radionuclide which is not included in the above list.

TABLE B.1-15

DOSE AND DOSE RATE FACTORS SPECIFIC FOR THE "ROCKS" FOR IODINE, TRITIUM, AND PARTICULATE RELEASES

Radio-nuclide	Critical Organ Dose Factor for Elevated Release Point $DFG_{icoR(e)}$ $(\frac{mrem}{\mu Ci})$	Critical Organ Dose Factor for Ground Level Release Point $DFG_{icoR(g)}$ $(\frac{mrem}{\mu Ci})$	Critical Organ Dose Rate Factor for Elevated Release Point $DFG'_{icoR(e)}$ $(\frac{mrem\text{-}sec}{\mu Ci\text{-}yr})$	Critical Organ Dose Rate Factor for Ground Level Release Point $DFG'_{icoR(g)}$ $(\frac{mrem\text{-}sec}{\mu Ci\text{-}yr})$
H-3	6.85E-10	6.45E-09	2.16E-02	2.03E-01
Cr-51	2.68E-08	1.75E-07	1.07E+00	6.53E+00
Mn-54	5.84E-06	3.18E-05	2.55E+02	1.31E+03
Fe-59	1.74E-06	1.17E-05	6.78E+01	4.29E+02
Co-58	2.01E-06	1.25E-05	8.11E+01	4.79E+02
Co-60	8.83E-05	4.09E-04	3.97E+03	1.85E+04
Zn-65	3.23E-06	1.80E-05	1.37E+02	7.29E+02
Sr-89	1.23E-06	1.15E-05	3.88E+01	3.63E+02
Sr-90	5.48E-05	5.14E-04	1.73E+03	1.62E+04
Zr-95	2.22E-06	1.68E-05	8.14E+01	5.83E+02
Nb-95	8.59E-07	5.79E-06	3.37E+01	2.13E+02
Mo-99	1.50E-07	1.34E-06	4.92E+00	4.32E+01
Ru-103	7.74E-07	5.47E-06	2.95E+01	1.96E+02
Ag-110m	1.54E-05	8.77E-05	6.47E+02	3.53E+03
Sb-124	4.04E-06	2.80E-05	1.56E+02	1.01E+03
I-131	8.27E-06	7.73E-05	2.61E+02	2.44E+03
I-133	1.95E-06	1.83E-05	6.18E+01	5.77E+02
Cs-134	2.78E-05	1.29E-04	1.25E+03	5.80E+03
Cs-137	4.19E-05	1.94E-04	1.89E+03	8.77E+03
Ba-140	1.10E-06	9.99E-06	3.56E+01	3.19E+02
Ce-141	3.59E-07	3.14E-06	1.20E+01	1.02E+02
Ce-144	7.02E-06	6.46E-05	2.25E+02	2.05E+03
Other*	9.56E-06	5.09E-05	4.16E+02	2.12E+03

* Dose factors to be used in Method I calculations for any "other" detected gamma emitting radionuclide which is not included in the above list.

2.0 METHOD TO CALCULATE OFF-SITE LIQUID CONCENTRATIONS

Chapter 2 contains the basis for station procedures used to demonstrate compliance with ODCM Part A Control C.6.1.1, which limits the total fraction of ECL in liquid pathways, other than noble gases (denoted here as F_1^{ENG}) at the point of discharge from the station to the environment (see Figure B.6-1).

F_1^{ENG} is limited to less than or equal to one, i.e.,

$$F_1^{ENG} \leq 1.$$

The total concentration of all dissolved and entrained noble gases at the point of discharge from the multiport diffuser from all station sources combined, denoted C_1^{NG}, is limited to 2E-04 μCi/ml, i.e.,

$$C_1^{NG} \leq 2E\text{-}04\ \mu Ci/ml.$$

Appendix C, Attachments 3 and 4, provide the option and bases for the use of the EMS determination of liquid concentration limits for plant discharges to the environment.

2.1 Method to Determine F_1^{ENG} AND C_1^{NG}

First, determine the total fraction of ECL (excluding noble gases), at the point of discharge from the station from all significant liquid sources denoted F_1^{ENG}; and then separately determine the total concentration at the point of discharge of all dissolved and entrained noble gases from all station sources, denoted C_1^{NG}, as follows:

$$F_1^{ENG} = \sum_p \sum_i \frac{C_{pi}}{ECL_i} \leq 10 \qquad (2\text{-}1)$$

$$\left(\frac{\mu Ci/ml}{\mu Ci/ml}\right)$$

and:

$$C_1^{NG} = \sum_i C_{1i}^{NG} \leq 2E\text{-}04 \qquad (2\text{-}2)$$

(μCi/ml) (μCi/ml) (μCi/ml)

where:

F_1^{ENG} = Total fraction of ECL in liquids, excluding noble gases, at the point of discharge from the multiport difuser.

C_{pi} = Concentration at point of discharge from the multiport diffuser of radionuclide "i", except for dissolved and entrained noble gases, from all tanks and other significant sources, p, from which a discharge may be made (including the waste test tanks and any other significant source from which a discharge can be made). C_{pi} is determined by dividing the product of the measured radionuclide concentration in liquid waste test tanks, PCCW, steam generator blowdown, or other effluent streams times their discharge flow rate by the total available dilution water flow rate of circulating and service water at the time of release (μCi/ml).

ECL_i = Effluent concentration limit (ECL) for radionuclide "i" (except for dissolved and entrained noble gases) in μCi/ml as specified in 10 CFR 20, Appendix B, Table 2. See Appendix B for a list of ECL values.

C_l^{NG} = Total concentration at point of discharge of all dissolved and entrained noble gases in liquids from all station sources (μCi/ml)

C_{li}^{NG} = Concentration at point of discharge of dissolved and entrained noble gas "i" in liquids from all station sources (μCi/ml)

2.2 Method to Determine Radionuclide Concentration for Each Liquid Effluent Source

2.2.1 Waste Test Tanks

C_{pi} is determined for each radionuclide detected from the activity in a representative grab sample of any of the waste test tanks and the predicted flow at the point of discharge.

The batch releases are normally made from two 25,000-gallon capacity waste test tanks. These tanks normally hold liquid waste which may have been processed through the installed vendor equipment. The waste test tanks can also contain other waste such as liquid taken directly from the floor drain/chemical drain treatment tanks when that liquid does not require processing in the evaporator, from the installed vendor resin skid, distillate from the boron recovery evaporator when the BRS evaporator is substituting for the waste evaporator, or waste distillate from the Steam Generator Blowdown System when that system must discharge liquid off site.

If testing indicates that purification of the waste test tank contents is required prior to release, the liquid can be circulated through the waste demineralizer and filter.

The contents of the waste test tank may be reused in the Nuclear System if the sample test meets the purity requirements.

Prior to discharge, each waste test tank is analyzed for principal gamma emitters in accordance with the liquid sample and analysis program outlined in Part A to the ODCM.

2.2.2 Turbine Building Sump

The Turbine Building sump collects leakage from the Turbine Building floor drains and discharges the liquid unprocessed to the circulating water system.

Sampling of this potential source is normally done once per week for determining the radioactivity released to the environment (see Table A.6.1-1).

2.2.3 Steam Generator Blowdown Flash Tank

The primary method to process radioactive secondary liquid from the steam generators is to direct steam blowdown flash tank bottoms cooler discharge to the floor drain tanks. If no secondary pressure is available, the steam blowdown and wet lay-ups pumps can be used. From the floor drain tanks, processing through the installed vendor resin skid (WL-SKD-135) to the waste test tanks is the preferred method. Other methods may be used as defined below.

The steam generator blowdown evaporators may process the liquid from the steam generator blowdown flash tank when there is primary to secondary leakage. Distillate from the evaporators can be sent to the waste test tanks or recycled to the condensate system. When there is no primary to secondary leakage, flash tank liquid is processed through the steam generator blowdown demineralizers and returned to the secondary side.

Steam generator blowdown is only subject to sampling and analysis when all or part of the blowdown liquid is being discharged to the environment instead of the normal recycling process (see Table A.6.1-1).

2.2.4 Primary Component Cooling Water (PCCW) System

The PCCW System is used to cool selected primary components.

The system is normally sampled weekly to determine if there is any radwaste in-leakage. If leakage has been determined, the Service Water System is sampled to determine if any release to the environment has occurred.

2.2.5 Water Treatment System (Condensate Polishing System)

The addition to the plant design of a Condensate Polishing System (CPS) for secondary side water treatment creates the potential for radiological contaminated effluents to be discharge from the Mixed Bed or Cation Demineralizers (during Megarinse) and from the Neutralization Tank (1-WT-TK-32) and the Low Conductivity Tank (1-CPS-TK-274) to the Circulating Water System via the Water Treatment System Piping following regeneration of the resin beds.

Prior to discharge, each tank or vessel to be processed is sampled and analyzed for principal gamma emitters in accordance with the Liquid Sample and Analysis Program outlined in Part A to the ODCM.

3.0 OFF-SITE DOSE CALCULATION METHODS

Chapter 3 provides the basis for station procedures required to meet the Radiological Effluent Control Program (RECP) dose and dose rate requirements contained in ODCM Part A Controls. A simple, conservative method (called Method I) is listed in Tables B.1-2 to B.1-7 for each of the requirements of the RECP. Each of the Method I equations is presented in Part B, Sections 3.2 through 3.9. As an alternate to Method I, the EMS computer program documented in Appendix C can be used to determine regulatory compliance for effluent doses and dose rates. The use of the EMS software is designated as Method IA in Chapter 3. In addition, those sections include more sophisticated methods (called Method II) for use when more refined results are needed. This chapter provides the methods, data, and reference material with which the operator can calculate the needed doses, dose rates and setpoints. For the requirements to demonstrate compliance with Part A off-site dose limits, the contribution from all measured ground level releases must be added to the calculated contribution from the vent stack to determine the Station's total radiological impact. The bases for the dose and dose rate equations are given in Chapter 7.0. Method IA bases and software verification documentation are contained in Appendix C.

The Annual Radioactive Effluent Release Report, to be filed after January 1 each year per Technical Specification 6.8.1.4, and Part A, Section 10.2, requires that meteorological conditions concurrent with the time of release of radioactive materials in gaseous effluents, as determined by sampling frequency and measurement, be used for determining the gaseous pathway doses. For continuous release sources (i.e., plant vent, condenser air removal exhaust, and gland steam packing exhauster), concurrent quarterly average meteorology will be used in the dose calculations along with the quarterly total radioactivity released. For batch releases or identifiable operational activities (i.e., containment purge or venting to atmosphere of the Waste Gas System), concurrent meteorology during the period of release will be used to determine dose if the total noble gas or iodine and particulates released in the batch exceeds five percent of the total quarterly radioactivity released from the unit; otherwise quarterly average meteorology will be applied. Quarterly average meteorology will also be applied to batch releases if the hourly met data for the period of batch release is unavailable.

Annual dose assessment reports prepared in accordance with the requirements of the ODCM will include a statement indicating that the appropriate portions of Regulatory Guide 1.109 (as identified in the individual subsections of the ODCM for each class of effluent exposure) have been used to determine dose impact from station releases. Any deviation from the methodology, assumptions, or parameters given in Regulatory Guide 1.109, and not already identified in the bases of the ODCM, will be explicitly described in the effluent report, along with the bases for the deviation.

3.1 Introductory Concepts

In Part A Controls, the RECP limits for dose or dose rate are stated. The term "dose" for ingested or inhaled radioactivity means the dose commitment, measured in mrem, which results from the exposure to radioactive materials that, because of uptake and deposition in the body, will continue to expose the body to radiation for some period of time after the source of radioactivity is stopped. The time frame over which the dose commitment is evaluated is 50 years. The phrases "annual dose" or "dose in one year" then refers to the 50-year dose commitment resulting from exposure to one year's worth of releases. "Dose in a quarter" similarly means the 50-year dose commitment resulting from exposure to one quarter's releases. The term "dose," with respect to external exposures, such as to noble gas clouds, refers only to the doses received during the actual time period of exposure to the radioactivity released from the plant. Once the source of the radioactivity is removed, there is no longer any additional accumulation to the dose commitment.

"Dose rate" is the total dose or dose commitment divided by exposure period. For example, an individual who is exposed via the ingestion of milk for one year to radioactivity from plant gaseous effluents and receives a 50-year dose commitment of 10 mrem is said to have been exposed to a dose rate of 10 mrem/year, even though the actual dose received in the year of exposure may be less than 10 mrem.

In addition to limits on dose commitment, gaseous effluents from the station are also controlled so that the maximum or peak dose rates at the site boundary at any time are limited to the equivalent annual dose limits of 10 CFR Part 20 to unrestricted areas (if it were assumed that the peak dose rates continued for one year). These dose rate limits provide reasonable assurance that members of the public, either inside or outside the site boundary, will not be exposed to annual averaged concentrations exceeding the limits specified in Appendix B, Table 2 of 10 CFR Part 20. See Appendix B for a listing of these concentration limits.

The quantities ΔD and $\dot{D}$ are introduced to provide calculable quantities, related to off-site doses or dose rates that demonstrate compliance with the RETS.

Delta D, denoted ΔD, is the quantity calculated by the Part B, Chapter 3, Method I dose equations. It represents the conservative increment in dose. The ΔD calculated by Method I equations is not necessarily the actual dose received by a real individual, but usually provides an upper bound for a given release because of the conservative margin built into the dose factors and the selection and definition of critical receptors. The radionuclide specific dose factors in each Method I dose equation represent the greatest dose to any organ of any age group. (Organ dose is a function of age because organ mass and intake are functions of age.) The critical receptor assumed by "Method I" equations is then generally a hypothetical individual whose behavior - in terms of location and intake - results in a dose which is higher than any real individual is likely to receive. Method IA dose calculations using the EMS software evaluate each age group and organ combination to determine the maximum organ dose for each mix of radionuclides specified in a release period. Method II also allows for a more exact dose calculation for each individual if necessary.

D dot, denoted $\dot{D}$, is the quantity calculated in the Part B, Chapter 3 dose rate equations. It is calculated using the station's effluent monitoring system reading and an annual or long-term average atmospheric dispersion factor. $\dot{D}$ predicts the maximum off-site annual dose if the peak observed radioactivity release rate from the plant stack continued for one entire year. Since peak release rates, or resulting dose rates, are usually of short time duration on the order of an hour or less, this approach then provides assurance that 10 CFR 20.106 limits will be met.

Each of the methods to calculate dose or dose rate is presented in the following subsections. Each dose type has two levels of complexity. Method I is the simplest and contains many conservative factors. As an alternate to Method I the EMS computer program documented in Appendix C can be used to determine regulatory compliance for effluent doses and dose rates. The use of the EMS system is designated as Method IA in Chapter 3 of Part B.

Method II is a more realistic analysis which makes use of the models in Regulatory Guide 1.109 (Revision 1), as noted in each subsection of Part B, Chapter 3 for the various exposure types. A detailed description of the methodology, assumptions, and input parameters to the dose models that are applied in each Method II calculation, if not already explicitly described in the ODCM, shall be documented and provided when this option is used for NRC reporting and ODCM, Part A RECP dose compliance.

3.2 Method to Calculate the Total Body Dose from Liquid Releases

Part A Control C.6.2.1 limits the total body dose commitment to a member of the public from radioactive material in liquid effluents to 1.5 mrem per quarter and 3 mrem per year per unit. Part A Control C.6.3.1 requires liquid radwaste treatment when the total body dose estimate exceeds 0.06 mrem in any 31-day period. Part A Control C.8.1.1 limits the total body dose commitment to any real member of the public from all station sources (including liquids) to 25 mrem in a year.

Use Method I or Method IA first to calculate the maximum total body dose from a liquid release from the station as it is simpler to execute and more conservative than Method II.

Use Method II if a more refined calculation of total body dose is needed, i.e., Method I or Method IA indicates the dose might be greater than Part A Control limits.

To evaluate the total body dose, use Equation 3-1 to estimate the dose from the planned release and add this to the total body dose accumulated from prior releases during the month. See Part B, Section 7.1.1 for basis.

3.2.1 Method I

The total body dose from a liquid release is:

$$D_{tb} = k \sum_i Q_i \; DFL_{itb} \qquad (3\text{-}1)$$

$$(\text{mrem}) = (\;)\;(\mu Ci)\left(\frac{\text{mrem}}{\mu\text{Ci}}\right)$$

where

DFL_{itb} = Site-specific total body dose factor (mrem/μCi) for a liquid release. It is the highest of the four age groups. See Table B.1-11.

Q_i = Total activity (μCi) released for radionuclide "i". (For strontiums, use the most recent measurement available.)

k = $918/F_d$; where F_d is the average (typically monthly average) dilution flow of the Circulating Water System at the point of discharge from the multiport diffuser (in ft^3/sec). For normal operations with a cooling water flow of 918 ft^3/sec, k is equal to 1. During periods when no or low flow is recorded from the Discharge Transition Structure (DTS), a minimum dilution flow of 23 ft^3/sec (10,500 gpm for one service water pump) can be used since this would be the minimum flow available when discharges to the tunnel are reestablished. Alternately, the monthly average discharge flow for the period in which the release occurs can be used when this value is available.

3.2 Method to Calculate the Total Body Dose from Liquid Releases

3.2.1 Method I (Continued)

Equation 3-1 can be applied under the following conditions (otherwise, justify Method I or consider Method II):

1. Liquid releases via the multiport diffuser to unrestricted areas (at the edge of the initial mixing or prompt dilution zone that corresponds to a factor of 10 dilution), and

2. Any continuous or batch release over any time period up to 1 year. For annual dose estimates, the annual average discharge flow from the DTS should be used as the dilution flow estimate.

Method IA is implemented by the EMS software as described in Appendix C. Liquid release models are detailed in sections 2.1 - 2.6 of the EMS Technical Reference Manual (Attachment 4 of Appendix C).

3.2.2 Method II

Method II consists of the models, input data and assumptions (bioaccumulation factors, shore-width factor, dose conversion factors, and transport and buildup times) in Regulatory Guide 1.109, Rev. 1 (Reference A), except where site-specific data or assumptions have been identified in the ODCM. The general equations (A-3 and A-7) taken from Regulatory Guide 1.109, and used in the derivation of the simplified Method I approach as described in the Bases section, are also applied to Method II assessments, except that doses calculated to the whole body from radioactive effluents are evaluated for each of the four age groups to determine the maximum whole body dose of an age-dependent individual via all existing exposure pathways. Table B.7-1 lists the usage factors of Method II calculations. As noted in Section B.7.1, the mixing ratio associated with the edge of the 1°F surface isotherm above the multiport diffuser may be used in Method II calculations for the shoreline exposure pathway (Mp = 0.025). Aquatic food ingestion pathways shall limit credit taken for mixing zone dilution to the same value assumed in Method I ($M_p = 0.10$).

3.3 Method to Calculate Maximum Organ Dose from Liquid Releases

Part A Control C.6.2.1 limits the maximum organ dose commitment to a Member of the Public from radioactive material in liquid effluents to 5 mrem per quarter and 10 mrem per year per unit. Part A Control C.6.3.1 requires liquid radwaste treatment when the maximum organ dose projected exceeds 0.2 mrem in any 31 days (see Part B, Subsection 3.11 for dose projections). Part A Control C.8.1.1 limits the maximum organ dose commitment to any real member of the public from all station sources (including liquids) to 25 mrem in a year except for the thyroid, which is limited to 75 mrem in a year.

Use Method I or Method IA first to calculate the maximum organ dose from a liquid release to unrestricted areas (see Figure B.6-1) as it is simpler to execute and more conservative than Method II.

Use Method II if a more refined calculation of organ dose is needed, i.e., Method I or Method IA indicates the dose may be greater than the limit.

Use Equation 3-2 to estimate the maximum organ dose from individual or combined liquid releases. See Part B, Section 7.1.2 for basis.

3.3.1 Method I

The maximum organ dose from a liquid release is:

$$D_{mo} = k \sum_i Q_i \; DFL_{imo} \qquad (3\text{-}2)$$

$$(\text{mrem}) = (\;)\;(\mu\text{Ci})\left(\frac{\text{mrem}}{\mu\text{Ci}}\right)$$

where

DFL_{imo} = Site-specific maximum organ dose factor (mrem/μCi) for a liquid release. It is the highest of the four age groups. See Table B.1-11.

Q_i = Total activity (μCi) released for radionuclide "i". (For composited analyses of strontiums, use the most recent measurement available.)

k = $918/F_d$; where F_d is the average (typically monthly average) dilution flow of the Circulating Water System at the point of discharge from the multiport diffuser (in ft^3/sec). For normal operations with a cooling water flow of 918 ft^3/sec, k is equal to 1. During periods when no or low flow is recorded from the Discharge Transition Structure (DTS), a minimum dilution flow of 23 ft^3/sec (10,500 gpm for one service water pump) can be used since this would be the minimum flow available when discharges to the tunnel are reestablished. Alternately, the monthly average discharge flow for the period in which the release occurs can be used when this value is available.

3.3 Method to Calculate Maximum Organ Dose from Liquid Releases

3.3.1 Method I (Continued)

Equation 3-2 can be applied under the following conditions (otherwise, justify Method I or consider Method II):

1. Liquid releases via the multiport diffuser to unrestricted areas (at the edge of the initial mixing or prompt dilution zone that corresponds to a factor of 10 dilution), and

2. Any continuous or batch release over any time period up to 1 year. For annual dose estimates, the annual average discharge flow from the DTS should be used as the dilution flow estimate.

Method IA is implemented by the EMS software as described in Appendix C. Liquid release models are detailed in sections 2.1 - 2.6 of the EMS Technical Reference Manual (Attachment 4 of Appendix C).

3.3.2 Method II

Method II consists of the models, input data and assumptions (bioaccumulation factors, shore-width factor, dose conversion factors, and transport and buildup times) in Regulatory Guide 1.109, Rev. 1 (Reference A), except where site-specific data or assumptions have been identified in the ODCM. The general equations (A-3 and A-7) taken from Regulatory Guide 1.109, and used in the derivation of the simplified Method I approach as described in the Bases section, are also applied to Method II assessments, except that doses calculated to critical organs from radioactive effluents are evaluated for each of the four age groups to determine the maximum critical organ of an age-dependent individual via all existing exposure pathways. Table B.7-1 lists the usage factors for Method II calculations. As noted in Section B.7.1, the mixing ratio associated with the edge of the 1°F surface isotherm above the multiport diffuser may be used in Method II calculations for the shoreline exposure pathway (Mp = 0.025). Aquatic food ingestion pathways shall limit credit taken for mixing zone dilution to the same value assumed in Method I ($M_p = 0.10$).

3.4 Method to Calculate the Total Body Dose Rate from Noble Gases

Part A Control C.7.1.1 limits the dose rate at any time to the total body from noble gases at any location at or beyond the site boundary to 500 mrem/year. The Part A Control indirectly limits peak release rates by limiting the dose rate that is predicted from continued release at the peak rate. By limiting $\dot{D}_{tb}$ to a rate equivalent to no more than 500 mrem/year, we assure that the total body dose accrued in any one year by any member of the general public is less than 500 mrem.

Use Method I or Method IA first to calculate the Total Body Dose Rate from the peak release rate via the station vents or ground level effluent release points. Method I applies at all release rates.

Use Method II if a more refined calculation of $\dot{D}_{tb}$ is desired by the station (i.e., use of actual release point parameters with annual or actual meteorology to obtain release-specific X/Qs) or if Method I or Method IA predicts a dose rate greater than the Part A Control limit to determine if it had actually been exceeded during a short time interval. See Part B, Section 7.2.1 for basis.

Compliance with the dose rate limits for noble gases are continuously demonstrated when effluent release rates are below the plant vent noble gas activity monitor alarm setpoint by virtue of the fact that the alarm setpoint is based on a value which corresponds to the off-site dose rate limit, or a value below it. Determinations of dose rate for compliance with Part A Control are performed when the effluent monitor alarm setpoint is exceeded, or as required by the Action Statement (Part A Control C.5.2, Table A.5.2-1) when the monitor is inoperable.

3.4.1 Method I

The Total Body Dose Rate to an off-site receptor due to noble gases in effluents released via the plant vent can be determined as follows:

$$\dot{D}_{tb(e)} = 0.85 * \sum_i \left(\dot{Q}_i * DFB_i\right) \qquad (3\text{-}3a)$$

$$\frac{mrem}{yr} = \left(\frac{pCi - sec}{\mu Ci - m^3}\right) \sum \left(\frac{\mu Ci}{sec}\right) \left(\frac{mrem - m^3}{pCi - yr}\right)$$

where

$\dot{D}_{tb(e)}$ = The off-site total body dose rate (mrem/yr) due to noble gases in elevated effluent releases,

$\dot{Q}_i$ = the release rate at the station vents (μCi/sec), for each noble gas radionuclide, "i", shown in Table B.1-10, and

DFB_i = total body gamma dose factor (see Table B.1-10).

The Total Body Dose Rate (to an off-site receptor) due to noble gas in ground level effluent releases can be determined as follows:

3.4 Method to Calculate the Total Body Dose Rate from Noble Gases

3.4.1 Method I (Continued)

$$\dot{D}_{tb(g)} = 3.4 \quad * \sum_i (\dot{Q}_i * DFB_i) \tag{3-3b}$$

$$\frac{mrem}{yr} = \left(\frac{pCi - sec}{\mu Ci - m^3}\right) \sum \left(\frac{\mu Ci}{sec}\right) \left(\frac{mrem - m^3}{pCi - yr}\right)$$

where

$\dot{D}_{tb(g)}$ = The total off-site body dose rate (mrem/yr) due to noble gases in ground level equivalent effluent releases, and

$\dot{Q}_i$ and DFB_i are as defined for Equation 3-3a.

For the special on-site receptor locations, the Science & Nature Center and the "Rocks," the total body dose rates due to noble gases in effluent discharges can be determined as follows:

For the Science & Nature Center, elevated effluent release:

$$\dot{D}_{tbE(e)} = 0.0015 * \sum_i (\dot{Q}_i * DFB_i) \tag{3-3c}$$

For the Science & Nature Center, ground level effluent release:

$$\dot{D}_{tbE(g)} = 0.0074 * \sum_i (\dot{Q}_i * DFB_i) \tag{3-3d}$$

For the "Rocks," elevated effluent release:

$$\dot{D}_{tbR(e)} = 0.038 * \sum_i (\dot{Q}_i * DFB_i) \tag{3-3e}$$

For the "Rocks," ground level effluent release:

$$\dot{D}_{tbR(g)} = 0.2 * \sum_i (\dot{Q}_i * DFB_i) \tag{3-3f}$$

where

$\dot{D}_{tbE(e)}$, $\dot{D}_{tbE(g)}$, $\dot{D}_{tbR(e)}$, and $\dot{D}_{tbR(g)}$ = The total body dose rate (mrem/yr) at the Science & Nature Center and the "Rocks," respectively, due to noble gases in gaseous discharges from elevated (e) and ground level (g) release points, and

$\dot{Q}_i$ and DFB_i are as defined previously.

Equations 3-3a through 3-3f can be applied under the following conditions (otherwise, justify Method I or consider Method II):

1. Normal operations (nonemergency event), and

2. Noble gas releases via any station vent to the atmosphere.

Method IA is implemented by the EMS software as described in Appendix C. Gaseous release models are detailed in Section 6.7.3 of the EMS Software Requirements Specification (Attachment 3 of Appendix C).

3.4.2 Method II

Method II consists of the model and input data (whole body dose factors) in Regulatory Guide 1.109, Rev. 1 (Reference A), except where site-specific data or assumptions have been identified in the ODCM. The general equation (B-8) taken from Regulatory Guide 1.109, and used in the derivation of the simplified Method I approach as described in the Bases section, is also applied to a Method II assessment. No credit for a shielding factor (S_F) associated with residential structures is assumed. Concurrent meteorology with the release period may be utilized for the gamma atmospheric dispersion factor identified in ODCM Equation 7-3 (Part B, Section 7.2.1), and determined as indicated in Part B, Section 7.3.2 for the release point (either ground level or vent stack) from which recorded effluents have been discharged.

3.5 METHOD TO CALCULATE THE SKIN DOSE RATE FROM NOBLE GASES

Part A Control C.7.1.1 limits the dose rate at any time to the skin from noble gases at any location at or beyond the site boundary to 3,000 mrem/year. The Part A Control indirectly limits peak release rates by limiting the dose rate that is predicted from continued release at the peak rate. By limiting $\dot{D}_{skin}$ to a rate equivalent to no more than 3,000 mrem/year, we assure that the skin dose accrued in any one year by any member of the general public is less than 3,000 mrem. Since it can be expected that the peak release rate on which $\dot{D}_{skin}$ is derived would not be exceeded without corrective action being taken to lower it, the resultant average release rate over the year is expected to be considerably less than the peak release rate.

Use Method I or Method IA first to calculate the Skin Dose Rate from peak release rate via station vents. Method I applies at all release rates.

Use Method II if a more refined calculation of $\dot{D}_{skin}$ is desired by the station (i.e., use of actual release point parameters with annual or actual meteorology to obtain release-specific X/Qs) or if Method I or Method IA predicts a dose rate greater than the Part A Control limit to determine if it had actually been exceeded during a short time interval. See Part B, Section 7.2.2 for basis.

Compliance with the dose rate limits for noble gases are continuously demonstrated when effluent release rates are below the plant vent noble gas activity monitor alarm setpoint by virtue of the fact that the alarm setpoint is based on a value which corresponds to the off-site dose rate limit, or a value below it. Determinations of dose rate for compliance with Part A Controls are performed when the effluent monitor alarm setpoint is exceeded.

3.5.1 Method I

For an off-site receptor and elevated effluent release, the Skin Dose Rate due to noble gases is:

$$\dot{D}_{skin(e)} = \sum_i (\dot{Q}_i * DF'_{i(e)}) \qquad (3\text{-}4a)$$

$$\frac{\text{mrem}}{\text{yr}} = \sum \left(\frac{\mu\text{Ci}}{\text{sec}}\right) \left(\frac{\text{mrem - sec}}{\mu\text{Ci - yr}}\right)$$

where

$\dot{D}_{skin(e)}$ = the off-site skin dose rate (mrem/yr) due to noble gases in an effluent discharge from an elevated release point,

$\dot{Q}_i$ = as defined previously, and

$DF'_{i(e)}$ = the combined skin dose factor for elevated discharges (see Table B.1-10).

For an off-site receptor and ground level release, the skin dose rate due to noble gases is:

$$\dot{D}_{skin(g)} = \sum_i (\dot{Q}_i * DF'_{i(g)}) \quad (3\text{-}4b)$$

where

$\dot{D}_{skin(g)}$ = The off-site skin dose rate (mrem/yr) due to noble gases in an effluent discharge from a ground level release point,

$\dot{Q}_i$ = as defined previously, and

$DF'_{i(g)}$ = The combined skin dose factor for ground level discharges (see Table B.1-10).

For an on-site receptor at the Science & Nature Center and elevated release conditions, the skin dose rate due to noble gases is:

$$\dot{D}_{skinE(e)} = 0.0014 * \sum_i (\dot{Q}i * DF'_{iE(e)}) \quad (3\text{-}4c)$$

where

$\dot{D}_{skinE(e)}$ = The skin dose rate (mrem/yr) at the Science & Nature Center due to noble gases in an elevated release,

$\dot{Q}_i$ = as defined previously, and

$DF'_{iE(e)}$ = the combined skin dose factor for elevated discharges (see Table B.1-13).

For an on-site receptor at the Science & Nature Center and ground level release conditions, the skin dose rate due to noble gases is:

$$\dot{D}_{skinE(g)} = 0.0014 * \sum_i (\dot{Q}i * DF'_{iE(g)}) \quad (3\text{-}4d)$$

where

$\dot{D}_{skinE(g)}$ = the skin dose rate (mrem/yr) at the Science & Nature Center due to noble gases in a ground level release,

$\dot{Q}_i$ = as defined previously, and

$DF'_{iE(g)}$ = The combined skin dose factor for ground level discharges (see Table B.1-13).

For an on-site receptor at the "Rocks" and elevated release conditions, the skin dose rate due to noble gases is:

$$\dot{D}_{skinR(e)} = 0.0076 * \sum_i (\dot{Q}i * DF'_{iR(e)}) \quad (3\text{-}4e)$$

where

$\dot{D}_{skinR(e)}$ = the skin dose rate at the "Rocks" due to noble gases in an elevated release,

$\dot{Q}_i$ = as defined previously, and

$DF'_{iR(e)}$ = The combined skin dose factor for elevated discharges (see Table B.1-13).

For an on-site receptor at the "Rocks" and ground level release conditions, the skin dose rate due to noble gases is:

$$\dot{D}_{skinR(g)} = 0.0076 * \sum_i (\dot{Q}_i * DF'_{iR(g)}) \quad (3\text{-}4f)$$

where

$\dot{D}_{skinR(g)}$ = the skin dose rate (mrem/yr) at the "Rocks" due to noble gases in a ground level release,

$\dot{Q}_i$ = as defined previously, and

$DF'_{iR(g)}$ = the combined skin dose factor for ground level discharges (see Table B.1-13).

Equations 3-4a through 3-4f can be applied under the following conditions (otherwise, justify Method I or consider Method II).

1. Normal operations (nonemergency event), and

2. Noble gas releases via any station vent to the atmosphere.

Method IA is implemented by the EMS software as described in Appendix C. Gaseous release models are detailed in Section 6.7.3 of the EMS Software Requirements Specification (Attachment 3 of Appendix C).

3.5.2 Method II

Method II consists of the model and input data (skin dose factors) in Regulatory Guide 1.109, Rev. 1 (Reference A), except where site-specific data or assumptions have been identified in the ODCM. The general equation (B-9) taken from Regulatory Guide 1.109, and used in the derivation of the simplified Method I approach as described in the Bases section, is also applied to a Method II assessment, no credit for a shielding factor (S_F) associated with residential structures is assumed. Concurrent meteorology with the release period may be utilized for the gamma atmospheric dispersion factor and undepleted atmospheric dispersion factor identified in ODCM Equation 7-8 (Part B, Section 7.2.2), and determined as indicted in Part B, Sections 7.3.2 and 7.3.3 for the release point (either ground level or vent stack) from which recorded effluents have been discharged.

3.6 Method to Calculate the Critical Organ Dose Rate from Iodines, Tritium and Particulates with $T_{1/2}$ Greater Than 8 Days

Part A Control C.7.1.1 limits the dose rate at any time to any organ from ^{131}I, ^{133}I, ^{3}H and radionuclides in particulate form with half lives greater than 8 days to 1500 mrem/year to any organ. The Part A Control indirectly limits peak release rates by limiting the dose rate that is predicted from continued release at the peak rate. By limiting $\dot{D}_{co}$ to a rate equivalent to no more than 1500 mrem/year, we assure that the critical organ dose accrued in any one year by any member of the general public is less than 1500 mrem.

Use Method I or Method IA first to calculate the Critical Organ Dose Rate from the peak release rate via the station vents. Method I applies at all release rates.

Use Method II if a more refined calculation of $\dot{D}_{co}$ is desired by the station (i.e., use of actual release point parameters with annual or actual meteorology to obtain release-specific X/Qs) or if Method I or Method IA predicts a dose rate greater than the Part A Control limit to determine if it had actually been exceeded during a short time interval. See Part B, Section 7.2.3 for basis.

3.6.1 Method I

The Critical Organ Dose Rate to an off-site receptor and elevated release conditions can be determined as follows:

$$\dot{D}_{co(e)} = \sum_i (\dot{Q} * DFG'_{ico(e)}) \qquad (3\text{-}5a)$$

$$\left(\frac{mrem}{yr}\right) = \sum \left(\frac{\mu Ci}{sec}\right) * \left(\frac{mrem - sec}{\mu Ci - yr}\right)$$

where

$\dot{D}_{co(e)}$ = The off-site critical organ dose rate (mrem/yr) due to iodine, tritium, and particulates in an elevated release,

$\dot{Q}_i$ = the activity release rate at the station vents of radionuclide "i" in µCi/sec (i.e., total activity measured of radionuclide "i" averaged over the time period for which the filter/charcoal sample collector was in the effluent stream. For i = Sr89 or Sr90, use the best estimates, such as most recent measurements), and

$DFG'_{ico(e)}$ = the site-specific critical organ dose rate factor $\left(\frac{mrem - sec}{\mu Ci - yr}\right)$ for an elevated gaseous release (See Table B.1-12).

For an off-site receptor and ground level release, the critical organ dose rate can be determined as follows:

$$\dot{D}_{co(g)} = \sum_i (\dot{Q}_i \, DFG'_{ico(g)}) \tag{3-5b}$$

where

$\dot{D}_{co(g)}$ = the off-site critical organ dose rate (mrem/yr) due to iodine, tritium, and particulates in a ground level release,

$\dot{Q}_i$ = as defined previously, and

$DFG'_{ico(g)}$ = the site-specific critical organ dose rate factor for a ground level gaseous discharge (see Table B.1-12).

For an on-site receptor at the Science & Nature Center and elevated release conditions, the critical organ dose rate can be determined as follows:

$$\dot{D}_{coE(e)} = 0.0014 * \sum_i (\dot{Q}_i \, DFG'_{icoE(e)}) \tag{3-5c}$$

where

$\dot{D}_{coE(e)}$ = The critical organ dose rate (mrem/yr) to a receptor at the Science & Nature Center due to iodine, tritium, and particulates in an elevated release,

$\dot{Q}_i$ = as defined previously, and

$DFG'_{icoE(e)}$ = the Science & Nature Center-specific critical organ dose rate factor for an elevated discharge (see Table B.1-14).

For an on-site receptor at the Science & Nature Center and ground level release conditions, the critical organ dose rate is:

$$\dot{D}_{coE(g)} = 0.0014 * \sum_i (\dot{Q}_i * DFG'_{icoE(g)}) \quad (3\text{-}5d)$$

where

$\dot{D}_{coE(g)}$ = the critical organ dose rate (mrem/yr) to a receptor at the Science & Nature Center due to iodine, tritium, and particulates in a ground level release,

$\dot{Q}_i$ = as defined previously, and

$DFG'_{icoE(g)}$ = the Science & Nature Center-specific critical organ dose rate factor for a ground level discharge (see Table B.1-14).

For an on-site receptor at the "Rocks" and elevated release conditions, the critical organ dose rate is:

$$\dot{D}_{coR(e)} = 0.0076 * \sum_i (\dot{Q}_i * DFG'_{icoR(e)}) \quad (3\text{-}5e)$$

where

$\dot{D}_{coR(e)}$ = The critical organ dose rate (mrem/yr) to a receptor at the "Rocks" due to iodine, tritium, and particulates in an elevated release,

$\dot{Q}_i$ = as defined previously, and

$DFG'_{icoR(e)}$ = the "Rocks"-specific critical organ dose rate factor for an elevated discharge (see Table B.1-15).

For an on-site receptor at the "Rocks" and ground level release conditions, the critical organ dose rate is:

$$\dot{D}_{coR(g)} = 0.0076 * \sum_i (\dot{Q}_i * DFG'_{icoR(g)}) \quad (3\text{-}5f)$$

where

$\dot{D}_{coR}$ and $\dot{Q}_i$ = are as defined previously, and

$DFG'_{icoR(g)}$ = the "Rocks"-specific critical organ dose rate factor for a ground level discharge (see Table B.1-15).

Equations 3-5a through 3-5f can be applied under the following conditions (otherwise, justify Method I or consider Method II):

1. Normal operations (not emergency event), and

2. Tritium, I-131 and particulate releases via monitored station vents to the atmosphere.

Method IA is implemented by the EMS software as described in Appendix C. Gaseous release models are detailed in Section 6.7.3 of the EMS Software Requirements Specification (Attachment 3 of Appendix C).

3.6.2 Method II

Method II consists of the models, input data and assumptions in Appendix C of Regulatory Guide 1.109, Rev. 1 (Reference A), except where site-specific data or assumptions have been identified in the ODCM (see Tables B.7-2 and B.7-3). The critical organ dose rate will be determined based on the location (site boundary, nearest resident, or farm) of receptor pathways as identified in the most recent annual land use census, or by conservatively assuming the existence of all pathways (ground plane, inhalation, ingestion of stored and leafy vegetables, milk, and meat) at an off-site location of maximum potential dose. Concurrent meteorology with the release period may be utilized for determination of atmospheric dispersion factors in accordance with Part B, Sections 7.3.2 and 7.3.3 for the release point (either ground level or vent stack) from which recorded effluents have been discharged. The maximum critical organ dose rates will consider the four age groups independently, and take no credit for a shielding factor (S_F) associated with residential structures.

3.7 Method to Calculate the Gamma Air Dose from Noble Gases

Part A Control C.7.2.1 limits the gamma dose to air from noble gases at any location at or beyond the site boundary to 5 mrad in any quarter and 10 mrad in any year per unit. Dose evaluation is required at least once per 31 days.

Use Method I or Method IA first to calculate the gamma air dose from the station gaseous effluent releases during the period.

Use Method II if a more refined calculation is needed (i.e., use of actual release point parameter with annual or actual meteorology to obtain release-specific X/Qs), or if Method I or Method IA predicts a dose greater than the Part A Control limit to determine if it had actually been exceeded. See Part B, Section 7.2.4 for basis.

3.7.1 Method I

The general form of the gamma air dose equation is:

$$D^{\gamma}_{air} = 3.17E-02 * \left[X/Q\right]^{\gamma}_{1hr} * t^{-a} * \sum_{i}\left(Q_i * DF^{\gamma}_{i}\right) \qquad (3\text{-}6)$$

$$(\text{mrad}) = \left(\frac{\text{pCi-yr}}{\mu\text{Ci-sec}}\right) * \left(\frac{\text{sec}}{\text{m}^3}\right) * (\ ) * \Sigma(\mu\text{Ci})\left(\frac{\text{mrad-m}^3}{\text{pCi-yr}}\right)$$

where

D^{γ}_{air} is the gamma air dose.

3.17E-02 is the number of pCi per μCi divided by the number of second per year,

$[X/Q]^{\gamma}_{1hr}$ is the 1-hour gamma atmospheric dispersion factor,

t^{-a} is a unitless factor which adjusts the 1-hour $[X/Q]^{\gamma}$ value for a release with a total duration of t hours,

Q_i is the total activity in μCi of each radionuclide "i" released to the atmosphere from the station gaseous effluent release point during the period of interest, and

DF^{γ}_{i} is the gamma dose factor to air for radionuclide "i" (see Table B.1-10).

Incorporating receptor location-specific atmospheric dispersion factors ($[X/Q]^{\gamma}$), adjustment factors (t^{-a}) for elevated and ground-level effluent release conditions, and occupancy factors when applicable (see Section 7.2.7), yields a series of equations by which the gamma air dose can be determined.

a. Maximum off-site receptor location, elevated release conditions:

$$D^{\gamma}_{air(e)} = 3.2E-07 * t^{-0.275} * \sum_{i} (Q_i * DF^{\gamma}_i) \quad (3\text{-}6a)$$

$$(\text{mrad}) = \left(\frac{\text{pCi - yr}}{\mu\text{Ci - m}^3}\right) * (\ ) * \Sigma(\mu\text{Ci}) \left(\frac{\text{mrad - m}^3}{\text{pCi - yr}}\right)$$

b. Maximum off-site receptor location, ground-level release conditions:

$$D^{\gamma}_{air(g)} = 1.6E-06 * t^{-0.293} * \sum_{i} (Q_i * DF^{\gamma}_i) \quad (3\text{-}6b)$$

$$(\text{mrad}) = \left(\frac{\text{pCi - yr}}{\mu\text{Ci - m}^3}\right) * (\ ) * \Sigma(\mu\text{Ci}) \left(\frac{\text{mrad - m}^3}{\text{pCi - yr}}\right)$$

c. Science & Nature Center receptor; elevated release conditions:

$$D^{\gamma}_{airE(e)} = 4.9E-10 * t^{-0.252} * \sum_{i} (Q_i * DF^{\gamma}_i) \quad (3\text{-}6c)$$

$$(\text{mrad}) = \left(\frac{\text{pCi- yr}}{\mu\text{Ci- m}^3}\right) * (\ ) \Sigma \left(\mu\text{Ci} * \frac{\text{mrad- m}^3}{\text{pCi- yr}}\right)$$

d. Science & Nature Center receptor; ground-level release conditions:

$$D^{\gamma}_{airE(g)} = 4.4E-09 * t^{-0.321} * \sum_{i} (Q_i * DF^{\gamma}_i) \quad (3\text{-}6d)$$

$$(\text{mrad}) = \left(\frac{\text{pCi- yr}}{\mu\text{Ci- m}^3}\right) * (\ ) \Sigma \left(\mu\text{Ci} * \frac{\text{mrad- m}^3}{\text{pCi- yr}}\right)$$

e. Receptor at the "Rocks"; elevated release conditions:

$$D^{\gamma}_{airR(e)} = 5.1E-09 * t^{-0.155} * \sum_{i} (Q_i * DF^{\gamma}_i) \quad (3\text{-}6e)$$

$$(\text{mrad}) = \left(\frac{\text{pCi- yr}}{\mu\text{Ci- m}^3}\right) * (\ ) \Sigma \left(\mu\text{Ci} * \frac{\text{mrad- m}^3}{\text{pCi- yr}}\right)$$

f. Receptor at the "Rocks"; ground-level release conditions:

$$D^{\gamma}_{airR(g)} = 4.1E\text{-}08 * t^{-0.204} * \sum_{i}(Q_i * DF^{\gamma}_i) \qquad (3\text{-}6f)$$

$$(\text{mrad}) = (\frac{\text{pCi-yr}}{\mu\text{Ci-m}^3}) * (\ ) \Sigma (\mu\text{Ci} * \frac{\text{mrad-m}^3}{\text{pCi-yr}})$$

Equations 3-6a through 3-6f can be applied under the following conditions (otherwise justify Method I or consider Method II):

1. Normal operations (nonemergency event), and

2. Noble gas releases via station vents to the atmosphere.

Method IA is implemented by the EMS software as described in Appendix C. Gaseous release models are detailed in Section 6.7.3 of the EMS Software Requirements Specification (Attachment 3 of Appendix C).

3.7.2 Method II

Method II consists of the models, input data (dose factors) and assumptions in Regulatory Guide 1.109, Rev. 1 (Reference A), except where site-specific data or assumptions have been identified in the ODCM. The general equations (B-4 and B-5) taken from Regulatory Guide 1.109, and used in the derivation of the simplified Method I approach as described in the Part B Bases Section 7.2.4 are also applied to Method II assessments. Concurrent meteorology with the release period may be utilized for the gamma atmospheric dispersion factor identified in ODCM Equation 7-14, and determined as indicated in Part B, Section 7.3.2 for the release point (either ground level or vent stack) from which recorded effluents have been discharged.

3.8 Method to Calculate the Beta Air Dose from Noble Gases

Part A Control C.7.2.1 limits the beta dose to air from noble gases at any location at or beyond the site boundary to 10 mrad in any quarter and 20 mrad in any year per unit. Dose evaluation is required at least once per 31 days.

Use Method I or Method IA first to calculate the beta air dose from gaseous effluent releases during the period. Method I applies at all dose levels.

Use Method II if a more refined calculation is needed (i.e., use of actual release point parameters with annual or actual meteorology to obtain release-specific X/Qs) or if Method I or Method IA predicts a dose greater than the Part A Control limit to determine if it had actually been exceeded. See Part B, Section 7.2.5 for basis.

3.8.1 Method I

The general form of the beta air dose equation is:

$$D_{air}^{\beta} = 3.17E\text{-}02 * (X/Q)_{1hr} * t^{-a} * \sum (Q_i * DF_i^{\beta}) \qquad (3\text{-}7)$$

$$(\text{mrad}) = \left(\frac{\text{pCi-yr}}{\mu\text{Ci-m}^3}\right) * \left(\frac{\text{sec}}{\text{m}^3}\right) * (\ ) * \Sigma\left(\mu\text{Ci} * \frac{\text{mrad-m}^3}{\text{pCi-yr}}\right)$$

where

D_{air}^{β} is the beta air dose,

3.17E-02 is the number of pCi per μCi divided by the number of seconds per year,

$(X/Q)_{1hr}$ is the 1-hour undepleted atmospheric dispersion factor,

t^{-a} is a unitless factor which adjusts the 1-hour X/Q value for a release with a total duration of t hours,

Q_i is the total activity (μCi) of each radionuclide "i" released to the atmosphere during the period of interest, and

DF_i^{β} is the beta dose factor to air for radionuclide "i" (see Table B.1-10).

Incorporating receptor location-specific atmospheric dispersion factor (X/Q), adjustment factors (t^{-a}) for elevated and ground-level effluent release conditions, and occupancy factors when applicable (see Section 7.2.7) yields a series of equations by which the Beta Air Dose can be determined.

a. Maximum off-site receptor location, elevated release conditions:

$$D^{\beta}_{air(e)} = 4.1E\text{-}7 * t^{-0.3} * \sum_i (Q_i * DF_i^{\beta}) \quad (3\text{-}7a)$$

$$(mrad) = (\frac{pCi\text{-}yr}{\mu Ci\text{-}m^3}) * (\ ) \Sigma (\mu Ci * \frac{mrad\text{-}m^3}{pCi\text{-}yr})$$

b. Maximum off-site receptor location, ground-level release conditions:

$$D^{\beta}_{air(g)} = 6.0E\text{-}06 * t^{-0.319} * \sum_i (Q_i * DF_i^{\beta}) \quad (3\text{-}7b)$$

$$(mrad) = (\frac{pCi\text{-}yr}{\mu Ci\text{-}m^3}) * (\ ) \Sigma (\mu Ci * \frac{mrad\text{-}m^3}{pCi\text{-}yr})$$

c. Science & Nature Center receptor; elevated release conditions:

$$D^{\beta}_{airE(e)} = 1.8E\text{-}09 * t^{-0.35} * \sum_i (Q_i * DF_i^{\beta}) \quad (3\text{-}7c)$$

$$(mrad) = (\frac{pCi\text{-}yr}{\mu Ci\text{-}m^3}) * (\ ) \Sigma (\mu Ci * \frac{mrad\text{-}m^3}{pCi\text{-}yr})$$

d. Science & Nature Center receptor; ground-level release conditions:

$$D^{\beta}_{airE(g)} = 2.4E\text{-}08 * t^{-0.347} * \sum_i (Q_i * DF_i^{\beta}) \quad (3\text{-}7d)$$

$$(mrad) = (\frac{pCi\text{-}yr}{\mu Ci\text{-}m^3}) * (\ ) \Sigma (\mu Ci * \frac{mrad\text{-}m^3}{pCi\text{-}yr})$$

e. Receptor at the "Rocks"; elevated release conditions:

$$D^{\beta}_{airR(e)} = 3.9E\text{-}08 * t^{-0.249} * \sum_i (Q_i * DF_i^{\beta}) \quad (3\text{-}7e)$$

$$(mrad) = (\frac{pCi\text{-}yr}{\mu Ci\text{-}m^3}) * (\ ) \Sigma (\mu Ci * \frac{mrad\text{-}m^3}{pCi\text{-}yr})$$

f. Receptor at the "Rocks"; ground-level release conditions:

$$D^{\beta}_{airR(g)} = 4.6E\text{-}07 * t^{-0.267} * \sum_i (Q_i * DF_i^{\beta}) \quad (3\text{-}7f)$$

$$(mrad) = (\frac{pCi\text{-}yr}{\mu Ci\text{-}m^3}) * (\ ) \Sigma (\mu Ci * \frac{mrad\text{-}m^3}{pCi\text{-}yr})$$

Equations 3-7a through 3-7f can be applied under the following conditions (otherwise justify Method I or consider Method II):

1. Normal operations (nonemergency event), and

2. Noble gas releases via station vents to the atmosphere.

Method IA is implemented by the EMS software as described in Appendix C. Gaseous release models are detailed in Section 6.7.3 of the EMS Software Requirements Specification (Attachment 3 of Appendix C).

3.8.2 Method II

Method II consists of the models, input data (dose factors) and assumptions in Regulatory Guide 1.109, Rev. 1 (Reference A), except where site-specific data or assumptions have been identified in the ODCM. The general equations (B-4 and B-5) taken from Regulatory Guide 1.109, and used in the derivation of the simplified Method I approach as described in the Part B Bases Section 7.2.5, are also applied to Method II assessments. Concurrent meteorology with the release period may be utilized for the atmospheric dispersion factor identified in ODCM Equation 7-15, and determined, as indicated in Part B, Sections 7.3.2 and 7.3.3 for the release point (either ground level or vent stack) from which recorded effluents have been discharged.

3.9 Method to Calculate the Critical Organ Dose from Iodines, Tritium and Particulates

Part A Control C.7.3.1 limits the critical organ dose to a member of the public from radioactive iodines, tritium, and particulates with half-lives greater than 8 days in gaseous effluents to 7.5 mrem per quarter and 15 mrem per year per unit. Part A Control C.7.3.1 limits the total body and organ dose to any real member of the public from all station sources (including gaseous effluents) to 25 mrem in a year except for the thyroid, which is limited to 75 mrem in a year.

Use Method I or Method IA first to calculate the critical organ dose from gaseous effluent releases as it is simpler to execute and more conservative than Method II.

Use Method II if a more refined calculation of critical organ dose is needed (i.e., Method I or Method IA indicates the dose is greater than the limit). See Part B, Section 7.2.6 for basis.

3.9.1 Method I

$$D_{co} = (X/Q)_{1hr}^{depl} / (X/Q)_{an}^{depl} * t^{-a} * \sum_i (Q_i * DFG_{ico}) \qquad (3\text{-}8)$$

$$(\text{mrem}) = (\frac{\text{sec}}{\text{m}^3}) / (\frac{\text{sec}}{\text{m}^3}) * (\ \ ) * \Sigma (\mu\text{Ci}) * (\frac{\text{mrem}}{\mu\text{Ci}})$$

where

D_{co} is the critical organ dose from iodines, tritium, and particulates,

$(X/Q)_{1hr}^{depl}$ is the 1-hour depleted atmospheric dispersion factor.

$(X/Q)_{an}^{depl}$ is the annual average depleted atmospheric dispersion.

t^{-a} is a unitless adjustment factor to account for a release with a total duration of t hours,

Q_i is the total activity in μCi of radionuclide "i" released to the atmosphere during the period of interest (for strontiums, use the most recent measurement), and

DFG_{ico} is the site-specific critical organ dose factor for radionuclide "i", see Tables B.1-12, B.1-14, and B.1-15. (For each radionuclide, it is the age group and organ with the largest dose factor.)

Incorporating receptor location-specific atmospheric dispersion factors ($(X/Q)_{1hr}^{depl}$ and $(X/Q)_{an}^{depl}$) and adjustment factors (t^{-a}) for elevated and ground-level release conditions, and incorporating occupancy factors when applicable (see Section 7.2.7), yields a series of equations by which the critical organ dose can be determined.

a. Maximum off-site receptor location, elevated release conditions:

$$D_{co(e)} = 14.8 * t^{-0.297} * \sum_i (Q_i * DFG_{ico(e)}) \quad (3\text{-}8a)$$

$$(\text{mrem}) = (\ ) * (\ ) \sum (\mu\text{Ci} * \frac{\text{mrem}}{\mu\text{Ci}})$$

b. Maximum off-site receptor location, ground-level release conditions:

$$D_{co(g)} = 17.7 * t^{-0.316} * \sum_i (Q_i * DFG_{ico(g)}) \quad (3\text{-}8b)$$

$$(\text{mrem}) = (\ ) * (\ ) \sum (\mu\text{Ci} * \frac{\text{mrem}}{\mu\text{Ci}})$$

c. Science & Nature Center receptor; elevated release conditions:

$$D_{coE(e)} = 3.3\text{E-}02 * t^{-0.349} * \sum_i (Q_i * DFG_{icoE(e)}) \quad (3\text{-}8c)$$

$$(\text{mrem}) = (\ ) * (\ ) \sum (\mu\text{Ci} * \frac{\text{mrem}}{\mu\text{Ci}})$$

d. Science & Nature Center receptor; ground-level release conditions:

$$D_{coE(g)} = 3.3\text{E-}02 * t^{-0.347} * \sum_i (Q_i * DFG_{icoE(g)}) \quad (3\text{-}8d)$$

$$(\text{mrem}) = (\ ) * (\ ) \sum (\mu\text{Ci} * \frac{\text{mrem}}{\mu\text{Ci}})$$

e. Receptor at the "Rocks"; elevated release conditions:

$$D_{coR(e)} = 7.3\text{E-}02 * t^{-0.248} * \sum_i (Q_i * DFG_{icoR(e)}) \quad (3\text{-}8e)$$

$$(\text{mrem}) = (\ ) * (\ ) \sum (\mu\text{Ci} * \frac{\text{mrem}}{\mu\text{Ci}})$$

f. Receptor at the "Rocks"; ground-level release conditions:

$$D_{coR(g)} = 8.6\text{E-}02 * t^{-0.267} * \sum_i (Q_i * DFG_{icoR(g)}) \quad (3\text{-}8f)$$

$$(\text{mrem}) = (\ ) * (\ ) \sum (\mu\text{Ci} * \frac{\text{mrem}}{\mu\text{Ci}})$$

Equations 3-8a through 3-8f can be applied under the following conditions (otherwise, justify Method I or consider Method II):

1. Normal operations (nonemergency event),

2. Iodine, tritium, and particulate releases via station vents to the atmosphere, and

3. Any continuous or batch release over any time period.

Method IA is implemented by the EMS software as described in Appendix C. Gaseous release models are detailed in Section 6.7.3 of the EMS Software Requirements Specification (Attachment 3 of Appendix C).

3.9.2 Method II

Method II consists of the models, input data and assumptions in Appendix C of Regulatory Guide 1.109, Rev. 1 (Reference A), except where site-specific data or assumptions have been identified in the ODCM (see Tables B.7-2 and B.7-3). The critical organ dose will be determined based on the location (site boundary, nearest resident, or farm) of receptor pathways, as identified in the most recent annual land use census, or by conservatively assuming the existence of all pathways (ground plane, inhalation, ingestion of stored and leafy vegetables, milk and meat) at an off-site location of maximum potential dose. Concurrent meteorology with the release period may be utilized for determination of atmospheric dispersion factors in accordance with Part B, Sections 7.3.2 and 7.3.3 for the release point (either ground level or vent stack) from which recorded effluents have been discharged. The maximum critical organ dose will consider the four age groups independently, and use a shielding factor (S_F) of 0.7 associated with residential structures.

3.10 Method to Calculate Direct Dose from Plant Operation

Part A Control C.8.1.1 restricts the dose to the whole body or any organ to any member of the public from all uranium fuel cycle sources to 25 mrem in a calendar year (except the thyroid, which is limited to 75 mrem). Direct radiation from contained sources is required to be included in the assessment of compliance with this standard.

3.10.1 Method

The direct dose from the station will be determined by obtaining the dose from TLD locations situated on-site near potential sources of direct radiation, as well as those TLDs near the site boundary which are part of the environmental monitoring program, and subtracting out the dose contribution from background. Additional methods to calculate the direct dose may also be used to supplement the TLD information, such as high pressure ion chamber measurements, or analytical design calculations of direct dose from identified sources (such as solid waste storage facilities).

The dose determined from direct measurements or calculations will be related to the nearest real person off-site, as well as those individuals on-site involved in activities at either the Education Center or the Rocks boat landing, to assess the contribution of direct radiation to the total dose limits of Part A Control C.8.1.1 in conjunction with liquid and gaseous effluents.

3.11 Dose Projections

Part A Controls C.6.3.1 and C.7.4.1 require that appropriate portions of liquid and gaseous radwaste treatment systems, respectively, be used to reduce radioactive effluents when it is projected that the resulting dose(s) would exceed limits which represent small fractions of the "as low as reasonably achievable" criteria of Appendix I to 10 CFR Part 50. The surveillance requirements of these Part A Controls state that dose projections be performed at least once per 31 days when the liquid radwaste treatment systems or gaseous radwaste treatment systems are not being fully utilized.

Since dose assessments are routinely performed at least once per 31 days to account for actual releases, the projected doses shall be determined by comparing the calculated dose from the last (typical of expected operations) completed 31-day period to the appropriate dose limit for use of radwaste equipment, adjusted if appropriate for known or expected differences between past operational parameters and those anticipated for the next 31 days.

3.11.1 Liquid Dose Projections

The 31-day liquid dose projections are calculated by the following:

a. Determine the total body D_{tb} and organ dose D_{mo} (Equations 3-1 and 3-2, respectively) for the last typical completed 31-day period. The last typical 31-day period should be one without significant identified operational differences from the period being projected to, such as full power operation vs. periods when the plant is shut down. For periods with identified operational differences, skip to subsection 3.11.1.e. below.

b. Calculate the ratio (R_1) of the total estimated volume of batch releases expected to be released for the projected period to that actually released in the reference period.

c. Calculate the ratio (R_2) of the estimated gross primary coolant activity for the projected period to the average value in the reference period. Use the most recent value of primary coolant activity as the projected value if no trend in decreasing or increasing levels can be determined.

d. Determine the projected dose from:

   Total Body: $D_{tb\,pr} = D_{tb} \cdot R_1 \cdot R_2$

   Max. Organ: $D_{mo\,pr} = D_{mo} \cdot R_1 \cdot R_2$

e. During periods when significant operational differences are identified, such as shutdowns vs. normal power operations, or when specific treatment components are expected to be bypassed or out of service for repair or maintenance, the projected dose should be based on an assessment of the expected amount of radioactivity that could be discharged, both through treated and any untreated pathways, over the next 31 days. Specific consideration should be given to effluent streams and treatment systems noted on Figure B.6-1. The volume of liquid to be released, the current or projected maximum radioactivity concentration in the effluent streams either prior to treatment or at the point of release to the environment, and the duration of expected release evaluations should be estimated as part of the projection of offsite dose.

For these periods outside the bounds of steps 3.11.1.a. when significant operational differences exist from the last reference period, the projected dose to the total body D_{tb} and organ dose D_{mo} shall use Equations 3-1 and 3-2, respectively to project dose for each definable time segment of release evolution and summed over the next 31 days. The radioactive release quantity, Q_i, in equations 3-1 and 3-2 represents the estimated quantity of radionuclide "i" estimated to be released over the next 31 days, or during short time periods for defined plant operational evaluations, based on expected volumes, concentrations and treatment options to be applied.

The EMS software can also be used to perform monthly projected dose calculations as described in Appendix C. The methodology applied by EMS in projecting liquid doses is outlined in Section 2.7 of Attachment 4 to Appendix C (EMS Technical Reference Manual).

3.11.2 Gaseous Dose Projections

1. For the gaseous radwaste treatment system, the 31-day dose projections are calculated by the following:

   a. Determine the gamma air dose D^{γ}_{air} (Equation 3-6a), and the beta air dose D^{β}_{air} (Equation 3-7a) from the last typical 31-day operating period. The last typical 31-day period should be one without significant identified operational differences from the period being projected to, such as full power steady state operation vs. periods when the plant is shutdown. For periods with identified operational differences, skip to subsection 3.11.2.2.e. below.

   b. Calculate the ratio (R3) of anticipated number of curies of noble gas to be released from the hydrogen surge tank to the atmosphere over the next 31 days to the number of curies released in the reference period on which the gamma and beta air doses are based. If no differences between the reference period and the next 31 days can be identified, set R3 to 1.

   c. Determine the projected dose from:

   Gamma Air: $D^{\gamma}_{air\,pr} = D^{\gamma}_{air} \cdot R_3$

   Beta Air: $D^{\beta}_{air\,pr} = D^{\beta}_{air} \cdot R_3$

2. For the ventilation exhaust treatment system, the critical organ dose from iodines, tritium, and particulates are projected for the next 31 days by the following:

   a. Determine the critical organ dose D_{co} (Equation 3-8a) from the last typical 31-day operating period. (If the limit of Part A Control C.7.4.1.c (i.e., 0.3 mrem in 31 days) is exceeded, the projected controlled area annual total effective dose equivalent from all station sources should be assessed to assure that the 10 CFR 20.1301 dose limits to members of the public are not exceeded.)* . The last typical 31-day period should be one without significant identified operational differences from the period being projected to, such as full power steady state operation vs. periods when the plant is shutdown. For periods with identified operational differences, skip to subsection 3.11.2.2.e. below.

b. Calculate the ratio (R_4) of anticipated primary coolant dose equivalent I-131 for the next 31 days to the average dose equivalent I-131 level during the reference period. Use the most current determination of DE I-131 as the projected value if no trend can be determined.

c. Calculate the ratio (R_5) of anticipated primary system leakage rate to the average leakage rate during the reference period. Use the current value of the system leakage as an estimate of the anticipated rate for the next 31 days if no trend can be determined.

d. Determine the projected dose from:

Critical Organ: $D_{co\ pr} = D_{co} \cdot R_4 \cdot R_5$

e. During periods when significant operational differences are identified, such as shutdowns vs. normal power operations, or when specific treatment components are expected to be bypassed or out of service for repair or maintenance, the projected dose should be based on an assessment of the expected amount of radioactivity that could be discharged, both through treated and any untreated pathways, over the next 31 days. Specific consideration should be given to effluent streams and treatment systems noted on Figure B.6-2. The volume or flow rate of gas to be released, the current or projected maximum radioactivity concentration in the effluent streams either prior to treatment or at the point of release to the environment, and the duration of expected release evaluations should be estimated as part of the projection of offsite dose.

For these periods outside the bounds of steps 3.11.2.1.a or 3.11.2.2.a. when significant operational differences exist from the last reference period, the projected air dose from gamma and beta emissions from noble gases (Equations 3-6 and Equations 3-7, respectively), or from iodines, tritium, and particulates (Equations 3-8) shall use the referenced equations to project dose for each definable time segment of release evolution and summed over the next 31 days. The radioactive release quantity, Q_i in the dose equations represents the estimated quantity of radionuclide "i" estimated to be released over the next 31 days, or during short time periods for defined plant operational evaluations, based on expected volumes, concentrations and treatment options to be applied.

3. Alternate Projection Method for Use with Containment Ventilation Exhaust Treatment System (Charcoal Filters)

During periods when the Containment Building air needs to be vented to the atmosphere, the decision to use the Containment charcoal filter train to exhaust Containment air can be based on dose conversion factors and critical organ dose equation that reflect only those real exposure pathways in the offsite environment as indicated by the annual Land Use Census. This reduces the excess conservatism associated with the standard Method I assumptions that all typical (potential) exposure pathways (including milk) may exist at the most limiting atmospheric dispersion point off site.

In place of the dose conversion factors found in Table B.1-12, and critical organ dose equation 3-8a for Dco, Chemistry Department technical evaluation CHSTID 02-004 contains the dose conversion factors (DFG) and critical organ dose equation which were developed in the same manner as the current Method I factors and time dependent dose equation, but which utilize the most recent Land Use Census data to define which exposure pathways and identified receptor locations exist. CHSTID 02-004 documents the development of this alternate dose projection method. After the Land Use Census is performed each year, and before application to any Containment venting evolution, CHSTID 02-004 will be reviewed to see if any new receptor location impacts the selection of controlling dose location.

The EMS software can also be used to perform monthly projected dose calculations as described in Appendix C. The methodology applied by EMS in projecting gaseous dose is outlined in Section 3.8 of Attachment 4 to Appendix C (EMS Technical Reference Manual).

*Note: This action is based on the assumption that tritium is the controlling nuclide for whole body exposures through the inhalation pathway. Maximum annual average on-site X/Q's for station effluent release points are approximately 100 times the values used for the site boundary dose calculations. However, the site boundary doses calculated by the ODCM for iodines, tritium, and particulates with half lives greater than 8 days, includes all potential off-site exposure pathways. For tritium, the inhalation pathway only accounts for 10% of the total dose contribution being calculated. As a result, if the monthly calculation indicates that the site boundary maximum organ dose reached 0.3 mrem, the on-site maximum dose due to inhalation would be approximately 3.0 mrem for this period. If this were projected to continue for a year with a 2000 hour occupancy factor applied, the projected inhalation whole body dose would be approximately 8 mrem, or 8% of the 10 CFR 20.1301 limit. This is a reasonable trigger value for the need to consider the dose contribution from all station sources to members of the public in controlled areas.

3.12 Method to Calculate Total Dose From Plant Operations

ODCM Control C.8.1.1 restricts the annual dose to the whole body or any organ of a member of the public from all uranium fuel cycle sources (including direct radiation) to 25 mrem (except the thyroid, which is limited to 75 mrem). These cumulative dose contribution limits from liquids and gaseous effluents, and direct radiation, implement the Environmental Protection Agency (EPA) 40 CFR 190, "Environmental Standards for the Uranium Fuel Cycle."

3.12.1 Method

Compliance with the Seabrook Station Effluent Controls dose objectives for the maximum individual, as calculated by the methods described in sections B.3.2, B.3.3, B.3.7, B.3.8, B.3.9 of the ODCM also demonstrates compliance with the EPA limits to any member of the public. This indirect determination of compliance is based on the fact that the Effluent Control liquid and gaseous dose objectives are taken from 10 CFR 50, Appendix I, and represent lower values than the 40 CFR 190 dose limits. Direct radiation dose from contained sources is not expected to be a significant contributor to the total dose to areas beyond the site boundary. If the operational dose objectives in the Seabrook ODCM Effluent Controls C.6.2.1.a, C.6.2.1.b, C.7.2.1.a, C.7.2.1.b, C.7.3.1.a, or C.7.3.1.b are determined to be exceeded by a factor of two, a Special Report must be prepared. The purpose of this Special Report is to determine by direct assessment if the cumulative dose (calendar year) to any member of the public (real individual) from all sources is within the limits of the Total Dose Control C.8.1.1.

In addition, section A.10.2, "Annual Radioactive Effluent Release Report," requires that an assessment of radiation doses to the likely most exposed member of the public from all effluent and direct radiation sources be included for the previous calendar year to show compliance with 40 CFR 190.

When required, the total dose to a member of the public will be calculated for all significant effluent release points for all real pathways, including direct radiation. Only effluent releases from Seabrook Station need be considered since no other uranium fuel cycle facilities exist within five miles. EPA has determined that for fuel cycle facilities separated by more than five miles, their contribution to each other's total dose would not be significant and cause dose Standard for the Uranium Fuel Cycle to be exceeded. The calculations will be based on the liquid and gaseous Methods II dose models as described in Section B.3, including usage factors and other documented site-specific parameters reflecting realistic assumptions, where appropriate. The liquid and gaseous effluent Method II models are derived from the methods given in Regulatory Guide 1.109, Rev. 1, October 1977.

The direct radiation component from the facility can be determined using environmental TLD results as noted in Section B.3.10.1 (or alternately, high pressure ion chamber measurements or analytical design calculations for estimating the direct radiation dose from identified contained radioactive sources within the facility).

4.0 RADIOLOGICAL ENVIRONMENTAL MONITORING PROGRAM

The radiological environmental monitoring stations are listed in Table B.4-1. The locations of the stations with respect to the Seabrook Station are shown on the maps in Figures B.4-1 to B.4-6.

Direct radiation measurements are analyzed at the station. All other radiological analyses for environmental samples are performed at a contractor laboratory. The contractor laboratory participates in an Interlaboratory Comparison Program for all relevant species in an aqueous (water) matrix. An independent vendor (Analytics) supplies the remaining cross check samples. These samples are presented on an air filter and in milk and water matrices.

Pursuant to Part A Surveillance S.9.2.1, the land use census will be conducted "during the growing season" at least once per 12 months. The growing season is defined, for the purposes of the land use census, as the period from June 1 to October 1. The method to be used for conducting the census will consist of one or more of the following, as appropriate: door-to-door survey, visual inspection from roadside, aerial survey, or consulting with local agricultural authorities.

Technical Specification 6.8.1.3 and Part A, Section 10.1 of the ODCM require that the results of the Radiological Environmental Monitoring Program be summarized in the Annual Radiological Environmental Operating Report "in the format of the table in the Radiological Assessment Branch Technical Position, Revision 1, 1979." The general table format will be used with one exception and one clarification, as follows. The mean and range values will be based not upon detectable measurements only, as specified in the NRC Branch Technical Position, but upon all measurements. This will prevent the positive bias associated with the calculation of the mean and range based upon detectable measurements only. Secondly, the Lower Limit of Detection column will specify the LLD required by ODCM Table A.9.1-2 for that radionuclide and sample medium.

TABLE B.4-1
RADIOLOGICAL ENVIRONMENTAL MONITORING STATIONS[a]

Exposure Pathway and/or Sample	Sample Location and Designated Code		Distance From Unit 1 Containment (km)	Direction From the Plant
1. AIRBORNE (Particulate and Radioiodine)				
	AP/CF-01	PSNH Barge Landing Area	2.6	ESE
	AP/CF-02	Harbor Road	2.5	E
	AP/CF-03	SW Boundary	1.0	SW
	AP/CF-04	W. Boundary	1.2	W
	AP/CF-05	Winnacunnet H.S.[b]	4.0	NNE
	AP/CF-07	(PSNH Substation)	5.7	NNW
	AP/CF-08	E&H Substation[b]	3.4	SSE
	AP/CF-09	Georgetown Electric Light (Control)	21.4	SSW
2. WATERBORNE				
a. Surface	WS-01	Hampton-Discharge Area	5.3	E
	WS-51	Ipswich Bay (Control)	16.9	SSE
b. Sediment	SE-02	Hampton-Discharge Area[b]	5.3	E
	SE-07	Hampton Beach[b]	3.1	E
	SE-08	Seabrook Beach	3.2	ESE
	SE-52	Ipswich Bay (Control)[b]	16.9	SSE
	SE-57	Plum Island Beach (Control)[b]	15.9	SSE
3. INGESTION				
a. Milk	TM-09	Hampton, NH [d]	5.3	NNW
	TM-15	Hampton Falls, NH [d]	6.9	NW
	TM-20	Rowley, MA [d]	17.0	S
	TM-23	Newbury, MA[d]	12.0	S
b. Fish and Invertebrates[c]				
	FH-03	Hampton - Discharge Area	4.5	ESE
	FH-53	Ipswich Bay (Control)	16.4	SSE
	HA-04	Hampton - Discharge Area	5.5	E
	HA-54	Ipswich Bay (Control)	17.2	SSE
	MU-06	Hampton - Discharge Area	5.2	E
	MU-09	Hampton Harbor[b]	2.6	E
	MU-56	Ipswich Bay (Control)	17.4	SSE
	MU-59	Plum Island[b]	15.8	SSE

TABLE B.4-1
RADIOLOGICAL ENVIRONMENTAL MONITORING STATIONS[a]
(Continued)

Exposure Pathway and/or Sample	Sample Location and Designated Code		Distance From Unit 1 Containment (km)	Direction From the Plant
c. Food Products				
	TG-08	Site Boundary	1.05	W
	TG-09	Site Boundary	.97	SW
	TG-10	Georgetown Light	21.4	SSW
4. DIRECT RADIATION				
	TL-1	Brimmer's Lane, Hampton Falls	.97	N
	TL-2	Landing Rd., Hampton	3.0	NNE
	TL-3	Glade Path, Hampton Beach	2.9	NE
	TL-4	Island Path, Hampton Beach	2.3	ENE
	TL-5	Harbor Rd., Hampton Beach	2.5	E
	TL-6	PSNH Barge Landing Area	2.7	ESE
	TL-7	Cross Rd., Seabrook Beach	2.6	SE
	TL-8	Farm Lane, Seabrook	1.3	SSE
	TL-9	Farm Lane, Seabrook	1.3	S
	TL-10	Site Boundary Fence	1.2	SSW
	TL-11	Site Boundary Fence	1.0	SW
	TL-12	Site Boundary Fence	1.2	WSW
	TL-13	Inside Site Boundary	1.2	W
	TL-14	Trailer Park, Seabrook	1.3	WNW
	TL-15	Brimmer's Lane, Hampton Falls	1.4	NW
	TL-16	Brimmer's Lane, Hampton Falls	1.2	NNW
	TL-17	South Rd., N. Hampton	7.8	N
	TL-18	Mill Rd., N. Hampton	7.6	NNE
	TL-19	Appledore Ave., N. Hampton	7.7	NE
	TL-20	Ashworth Ave., Hampton Beach	3.2	ENE
	TL-21	Route 1A, Seabrook Beach	3.7	SE
	TL-22	Cable Ave., Salisbury Beach	7.6	SSE

TABLE B.4-1
RADIOLOGICAL ENVIRONMENTAL MONITORING STATIONS[a]
(Continued)

Exposure Pathway and/or Sample	Sample Location and Designated Code		Distance From Unit 1 Containment (km)	Direction From the Plant
	TL-23	Ferry Rd., Salisbury	8.1	S
	TL-24	Ferry Lots Lane, Salisbury	7.2	SSW
	TL-25	Elm St., Amesbury	7.6	SW
	TL-26	Route 107A, Amesbury	8.1	WSW
	TL-27	Highland St., S. Hampton	7.5	W
	TL-28	Route 150, Kensington	7.5	WNW
	TL-29	Frying Pan Lane, Hampton Falls	7.2	NW
	TL-30	Route 27, Hampton	7.6	NNW
	TL-31	Alumni Drive, Hampton	3.8	NNE
	TL-32	Seabrook Elementary School	2.0	S
	TL-33	Dock Area, Newburyport	9.8	S
	TL-34	Bow St., Exeter	12.0	NW
	TL-35	Lincoln Ackerman School	2.3	NNW
	TL-36	Route 97, Georgetown (Control)	22.6	SSW
	TL-37	Plaistow, NH (Control)	21.5	WSW
	TL-38	Hampstead, NH (Control)	27.7	W
	TL-39	Fremont, NH (Control)	27.0	WNW
	TL-40	Newmarket, NH (Control)	21.6	NNW
	TL-41	Portsmouth, NH, (Control)[b]	21.0	NNE
	TL-42	Ipswich, MA (Control)[b]	22.8	SSE

TABLE B.4-1
RADIOLOGICAL ENVIRONMENTAL MONITORING STATIONS[a]
(Continued)

(a) Sample locations are shown on Figures B.4-1 to B.4-6.

(b) This sample location is not required by monitoring program defined in Part A of ODCM; program requirements specified in Part A do not apply to samples taken at this location.

(c) Samples will be collected pursuant to ODCM Table A.9.1-1. Samples are not required from all stations listed during any sampling interval (FH = Fish; HA = Lobsters; MU = Mussels). Table A.9.1-1 specifies that "one sample of three commercially and recreationally important species" be collected in the vicinity of the plant discharge area, with similar species being collected at a control location. (This wording is consistent with the NRC Final Environmental Statement for Seabrook Station.) Since the discharge area is off-shore, there is a great number of fish species that could be considered commercially or recreationally important. Some are migratory (such as striped bass), making them less desirable as an indicator of plant-related radioactivity. Some pelagic species (such as herring and mackerel) tend to school and wander throughout a large area, sometimes making catches of significant size difficult to obtain. Since the collection of all species would be difficult or impossible, and would provide unnecessary redundancy in terms of monitoring important pathways to man, three fish and invertebrate species have been specified as a minimum requirement. Samples may include marine fauna such as lobsters, clams, mussels, and bottom-dwelling fish, such as flounder or hake. Several similar species may be grouped together into one sample if sufficient sample mass for a single species is not available after a reasonable effort has been made (e.g., yellowtail flounder and winter flounder)

(d) Monitoring program defined in Part A of ODCM does not require this sample location; food product sampling is being implemented in lieu of an insufficient number ok milk locations.

FIGURE B.4-1
RADIOLOGICAL ENVIRONMENTAL MONITORING LOCATIONS
WITHIN 4 KILOMETERS OF SEABROOK STATION

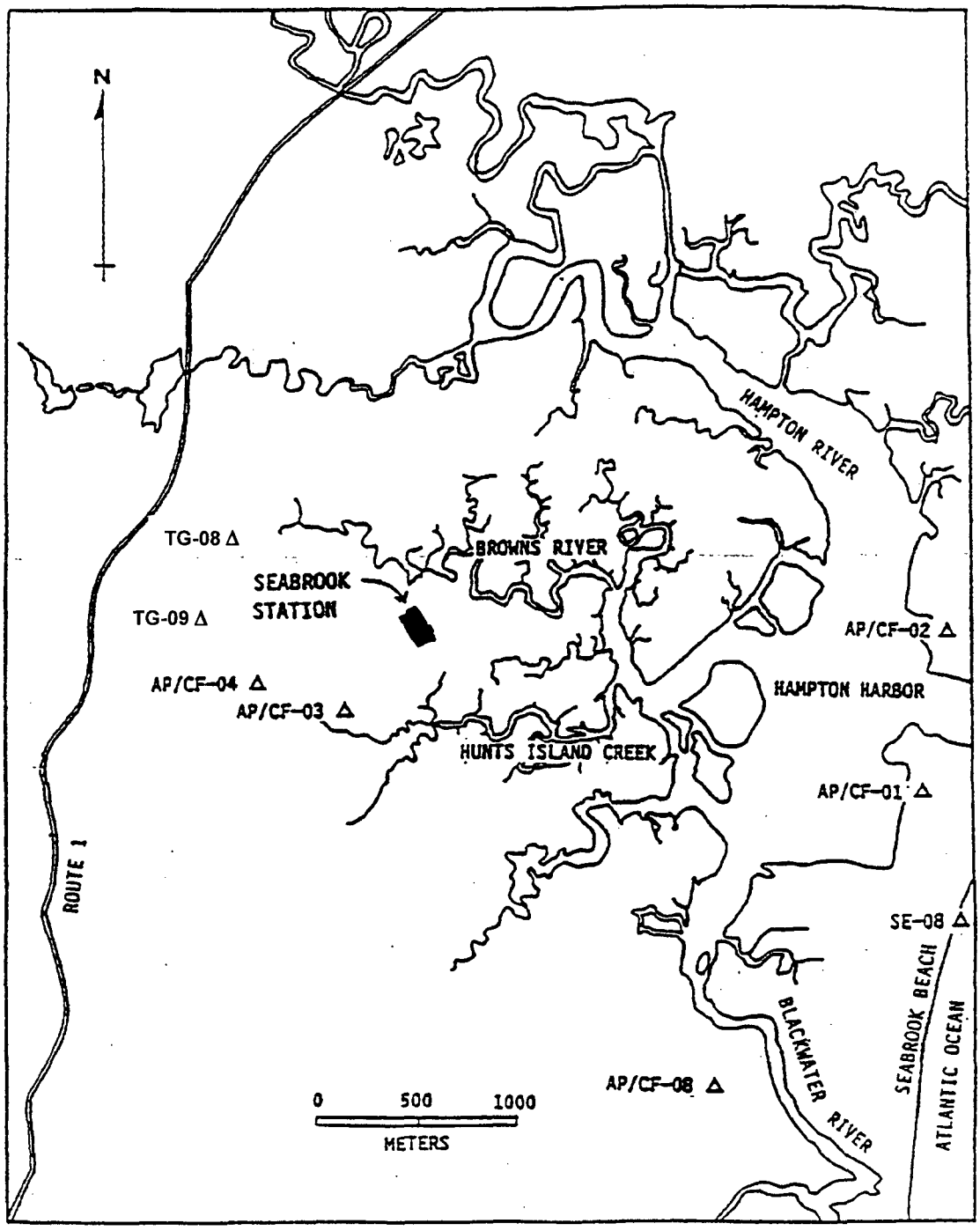

FIGURE B.4-2
RADIOLOGICAL ENVIRONMENTAL MONITORING LOCATIONS
BETWEEN 4 KILOMETERS AND 12 KILOMETERS FROM SEABROOK STATION

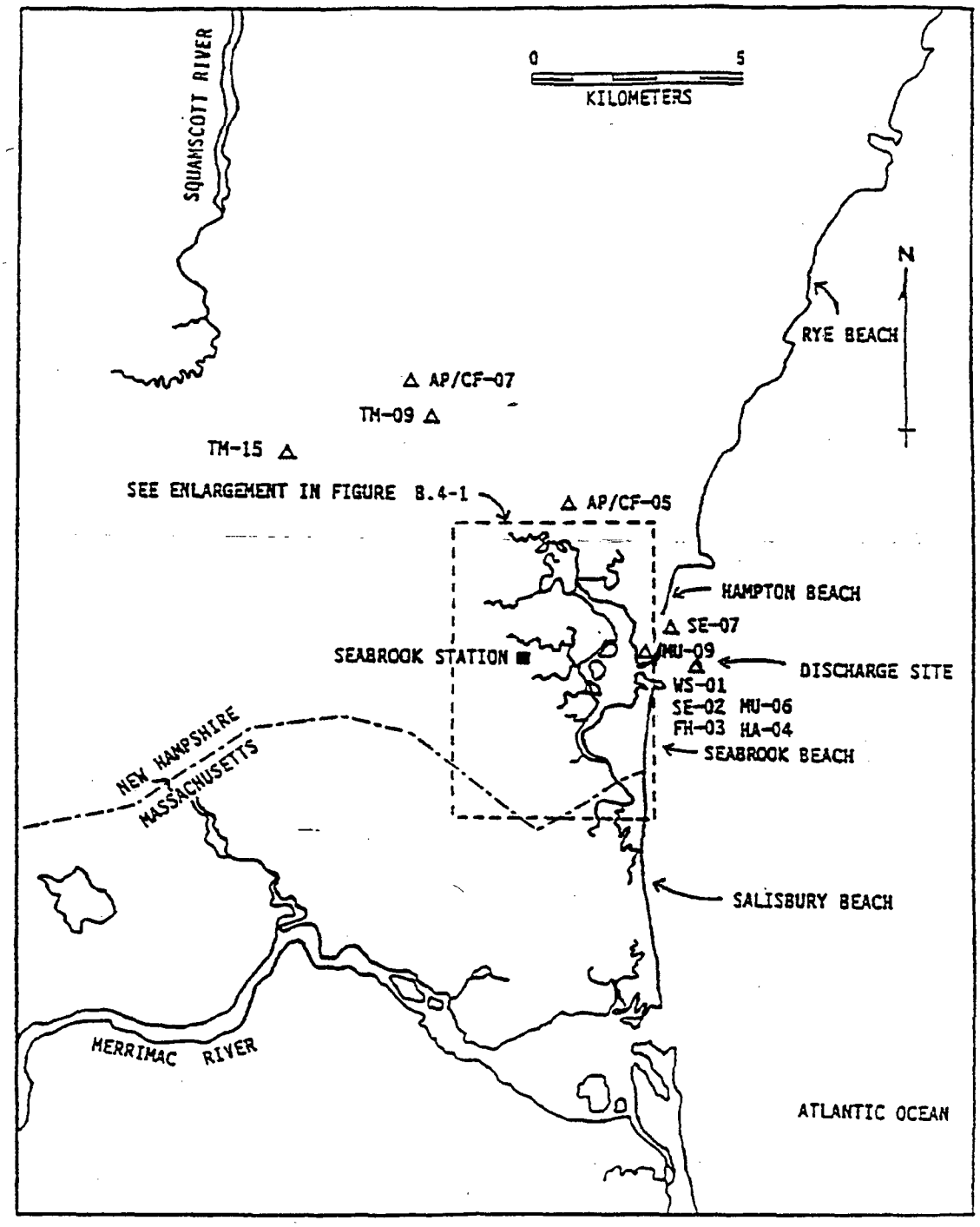

FIGURE B.4-3
RADIOLOGICAL ENVIRONMENTAL MONITORING LOCATIONS
OUTSIDE 12 KILOMETERS OF SEABROOK STATION

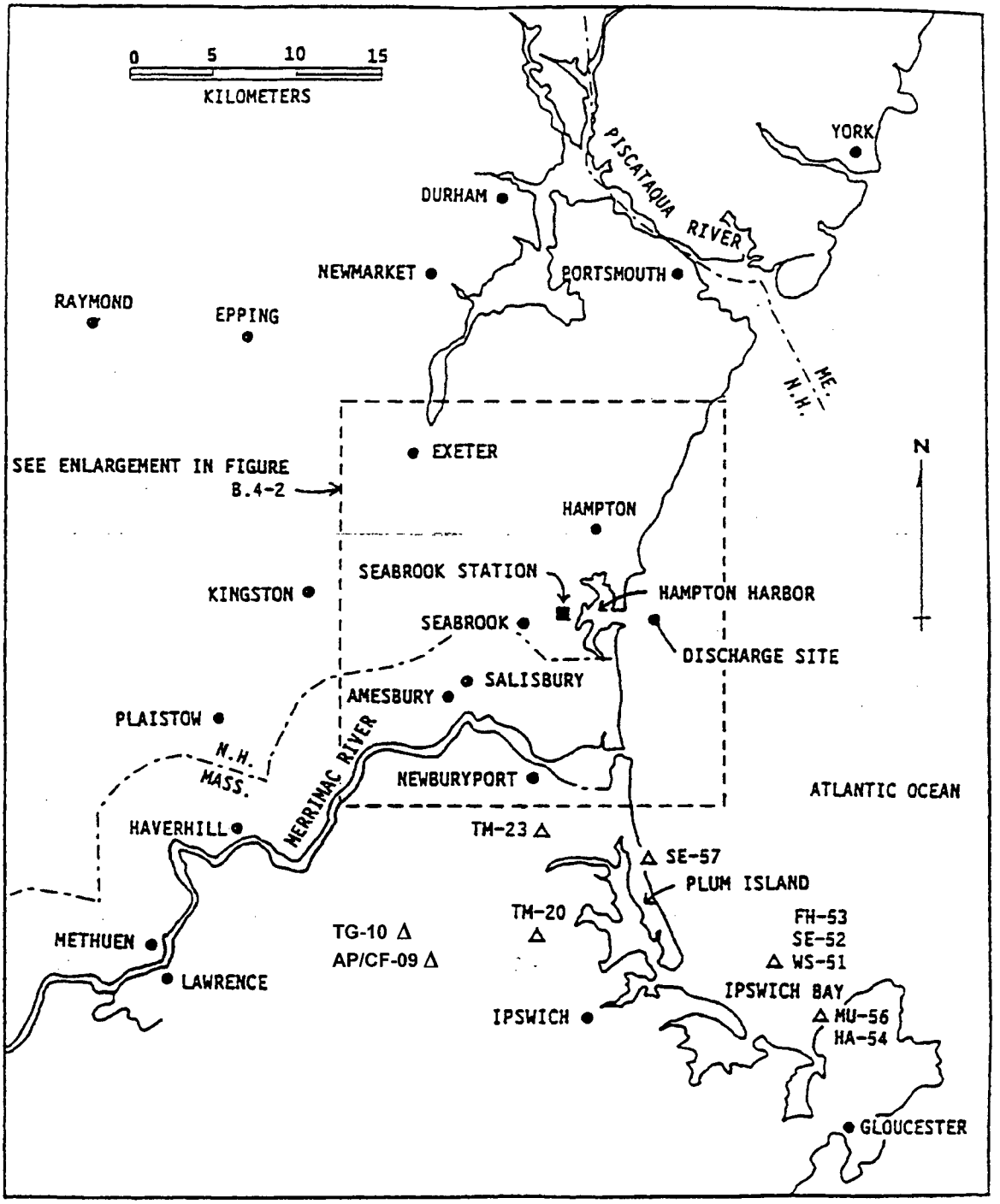

FIGURE B.4-4
DIRECT RADIATION MONITORING LOCATIONS WITHIN
4 KILOMETERS OF SEABROOK STATION

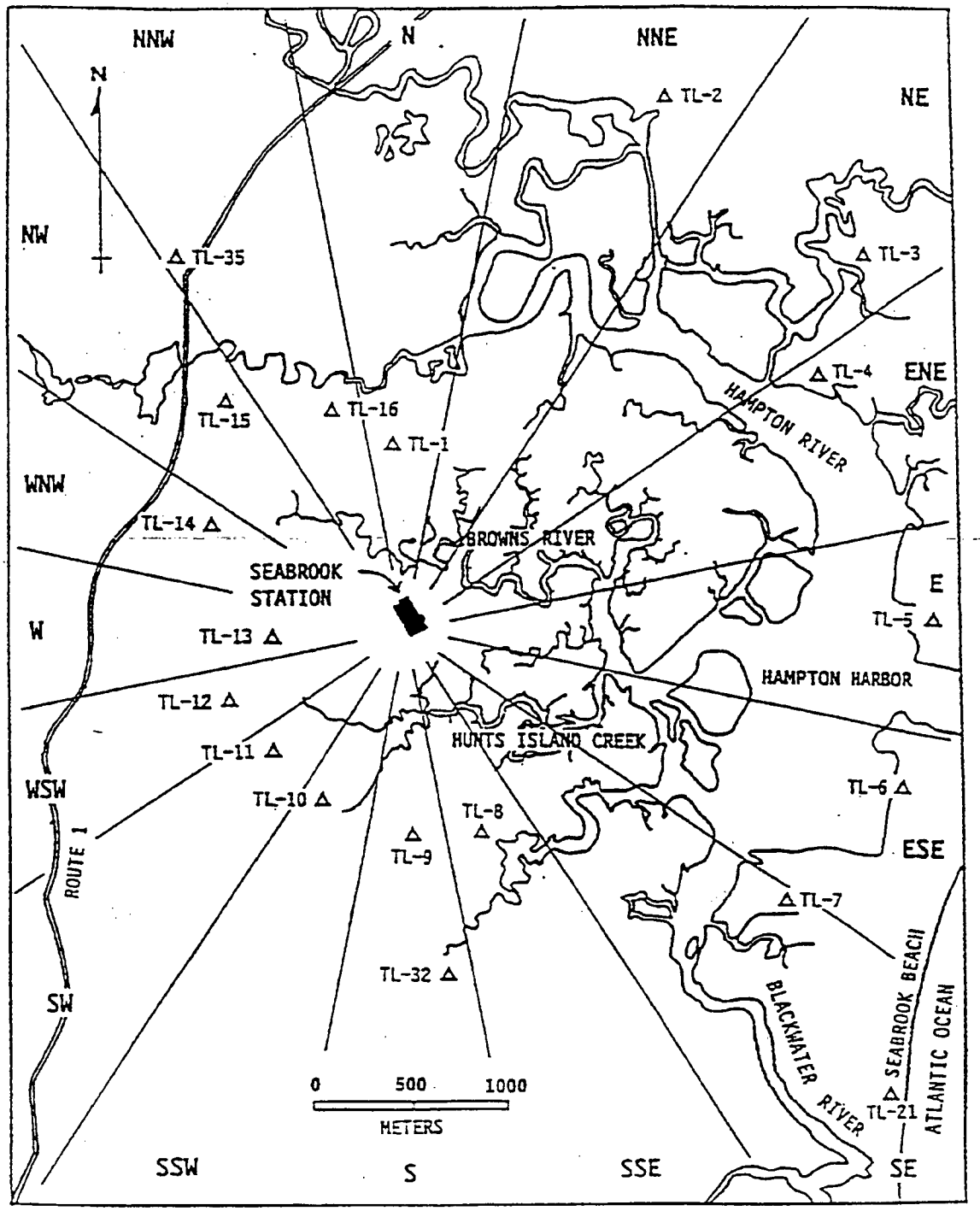

FIGURE B.4-5
DIRECT RADIATION MONITORING LOCATIONS BETWEEN
4 KILOMETERS AND 12 KILOMETERS FROM SEABROOK STATION

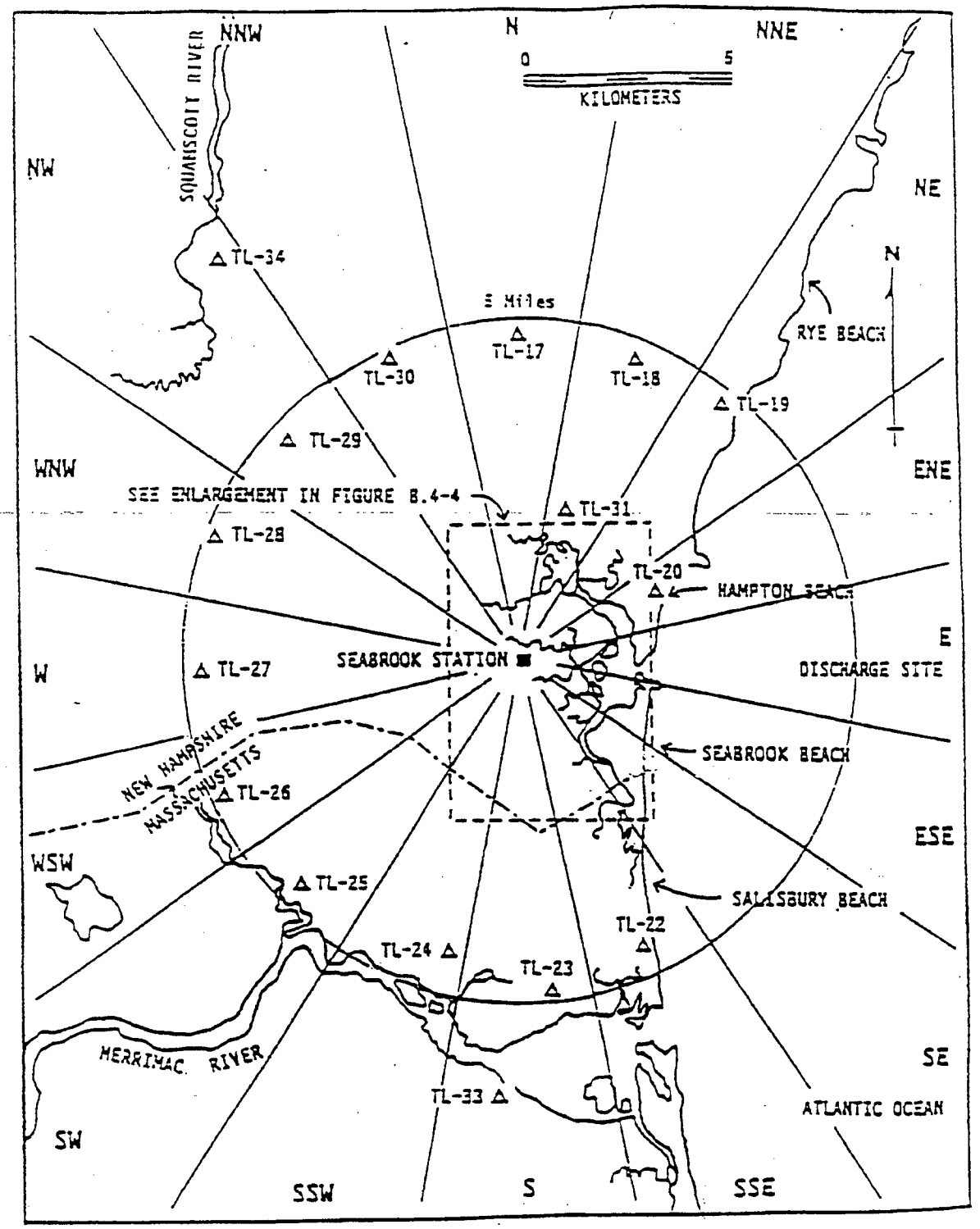

FIGURE B.4-6
DIRECT RADIATION MONITORING LOCATIONS OUTSIDE
12 KILOMETERS OF SEABROOK STATION

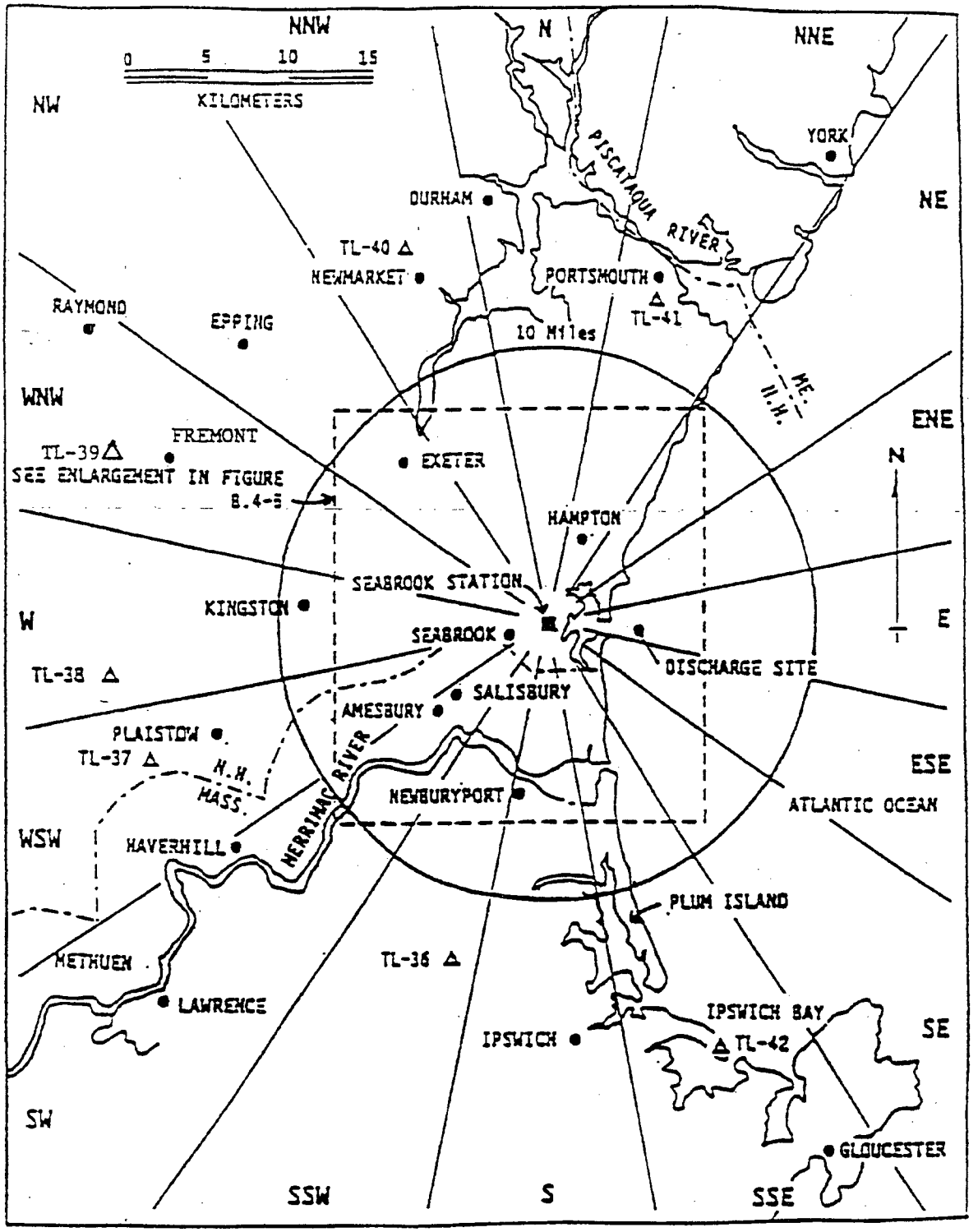

5.0 SETPOINT DETERMINATIONS

Chapter 5 contains the methodology for the calculation of effluent monitor setpoints to implement the requirements of the radioactive effluent monitoring systems Part A Controls C.5.1 and C.5.2 for liquids gases, respectively.

Example setpoint calculations are provided for each of the required effluent monitors.

5.1 Liquid Effluent Instrumentation Setpoints

Part A Control C.5.1 requires that the radioactive liquid effluent instrumentation in Table A.5.1-1 of Part A have alarm setpoints in order to ensure that Part A Control C.6.1.1 is not exceeded. Part A Control C.6.1.1 limits the activity concentration in liquid effluents to ten times the ECL values in 10 CFR 20, Appendix B, Table 2, and a total noble gas MPC.

5.1.1 Liquid Waste Test Tank Monitor (RM-6509)

The liquid waste test tank effluent monitor provides alarm and automatic termination of release prior to exceeding ten times the concentration limits specified in 10 CFR 20, Appendix B, Table 2, Column 2 to the environment. It is also used to monitor discharges from various waste sumps to the environment.

5.1.1.1 Method to Determine the Setpoint of the Liquid Waste Test Tank Monitor (RM-6509)

The alarm setpoint is based on ensuring that radioactive effluents in liquid waste are in compliance with Control limits which are based on the concentration limits in Appendix B to 10 CFR 20. The alarm point depends on available dilution flow through the discharge tunnel, radwaste discharge flow rate from the test tanks, the isotopic composition of the liquid waste, and the monitor response efficiency and background count rate applicable at the time of the discharge. The alarm/trip setpoint is determined prior to each batch release taking into account current values for each variable parameter. The following steps are used in determining the monitor setpoint:

First, the minimum required dilution factor is determined by evaluating the isotopic analysis of each test tank to be released along with ECL requirements for each radionuclide. The most recent analysis data for tritium and other beta emitters that are analyzed only monthly or quarterly on composite samples can be used as an estimate of activity concentration in the tank to be released. For noble gases, the Control limit (C.6.1.1) is defined as 2E-04 μCi/ml total for all dissolved and entrained gases. Therefore,

$$DF_{min} = \sum \frac{C_i}{10ECL_i} \quad \text{or} \quad \sum \frac{C_{NG}}{2E-04}, \text{ whichever is larger.} \qquad (5\text{-}3)$$

Where:

DF_{min} = Minimum required dilution factor necessary to ensure that the sum of the ratios for each nuclide concentration divided by its ECL value is not greater than 10 (dimensionless).

C_i = Activity concentration of each radionuclide "i" (except noble gases) determined to be in the test tank (μCi/ml). This includes tritium and other non gamma emitting isotopes either measured or estimated from the most recent composite analysis.

C_{ng} = The sum of all dissolved and entrained noble gases identified in each test tank (μCi/ml).

ECL_i = Effluent concentration limit (ECL) for radionuclide "i" (except for dissolved and entrained noble gas) in μCi/ml as specified in 10 CFR 20, Appendix B, Table 2.

See ODCM, Appendix B, for a listing. In the event that no activity is expected to be discharged, or can be measured in the system, the liquid monitor setpoint should be based on the most restrictive ECL for an "unidentified" mixture or a mixture known not to contain certain radionuclides as given in 10 CFR 20, Appendix B, notes.

2E-04 = The total dissolved and entrained noble gas Technical Specification concentration limit in liquid effluents from the plant (μCi/ml).

Next, the available dilution flow through the discharge tunnel (F_d), or a conservative estimate for it, is divided by the minimum dilution factor (DF_{min}) to determine the maximum allowable discharge flow rate (F_{max}) that the test tanks could be released at without exceeding the ECL limits, assuming no additional radioactive flow paths are discharging at the time of release of the test tanks. Therefore,

$$F_{max} = \frac{F_d}{DF_{min}}$$

Where:

F_{max} = The maximum allowable discharge flow rate from the test tank past the monitor which would equate to the Control concentration limit for the radioactivity mixture determined to be in the test tank (gpm).

F_d = The actual or conservative estimate of the flow rate out of the discharge tunnel (gpm).

For Waste Test Tank (WTT) releases, tritium is expected to be the radionuclide with the highest concentration, and therefore requires the highest dilution flow in order to satisfy the discharge concentration limits. Unlike concentrations of other dissolved or suspended radionuclides, tritium concentrations are not expected to vary because they are unaffected by plant cleanup systems used to reduce or control waste radioactivity levels. As such, events that cause sudden increases in the concentrations of other dissolved or suspended radionuclides, such as changes in waste cleanup efficiencies, crud bursts or failed fuel fractions would not change the tritium concentrations. As long as the minimum required dilution factor (DF_{min}) for all radionuclides present in the liquid waste is satisfied, the alarm setpoint for the Waste Test Tank monitor need only consider the potential changes to the concentrations of detectable gamma-emitting radionuclides. Therefore, the required dilution for detectable activity by the WTT monitor can be determined by applying the definition of DF_{min} (given in equation (5-3)) to only the gamma-emitting radionuclides present in the waste.

$$DF_{min\gamma} = \Sigma\,(C_{i\gamma}/10ECL_i) \qquad (5\text{-}3a)$$

Where:

$DF_{min\gamma}$ = Minimum required dilution factor necessary to ensure that the sum of the ratios for the concentration of each gamma-emitting radionuclide to the respective ECL value is not greater than 10 (dimensionless).

$C_{i\gamma}$ = Activity concentration of each detectable gamma-emitting radionuclide "i" in the mixture (μCi/ml).

ECL_i = As defined previously.

As in the determination of F_{max} for the total radioactivity mixture, the maximum allowable discharge flow rate that the waste from the test tanks could be released at without exceeding the concentration limit for gamma-emitters, $F_{max\gamma}$, is obtained by dividing the discharge tunnel flow, F_d, by $DF_{min\gamma}$. This determination is based on the assumption that there are no additional discharges of liquid waste at the time of release from the test tanks. Therefore,

$$F_{max\gamma}, = F_d / DF_{min\gamma}$$

Where:

$F_{max\gamma}$ = The maximum allowable discharge flow rate from the test tank past the monitor which would equate to the control concentration limit for the gamma radioactivity mixture determined to be in the test tank (gpm).

F_d = The actual or conservative estimate of the flow rate out of the discharge tunnel (gpm).

The selection of the actual discharge flow rate (F_m) from the test tanks compared to the maximum allowable discharge rate based on all radionuclides that are present (F_{max}) and the maximum allowable discharge rate based on only gamma-emitting radionuclides that are present ($F_{max\gamma}$) must satisfy the following:

$$F_m \leq F_{max} * f_{tt} \leq F_{max\gamma} * f_{tt}$$

Where the f_{tt} represents an administrative fraction of the maximum allowable discharge flow from the test tanks. This fraction provides additional margin in meeting ECL limits for non-gamma emitters (such as tritium) at the discharge point to the ocean when other flow paths may contribute to the total site release at the time of tank discharges and minimum dilution flow conditions exist.

With the above conditions on discharge and dilution flow rates satisfied, the alarm/trip setpoint for the monitor which corresponds to the maximum allowable concentration at the point of discharge is determined as follows:

$$R_{setpoint} = f_1 \times \frac{F_d}{F_m \times DF_{min\gamma}} \times \sum C\gamma i \qquad (5\text{-}1)$$

Where:

$R_{setpoint}$	=	The maximum allowable alarm/trip setpoint for an instrument response (μCi/ml) that ensures the limiting concentration at the point of discharge is not exceeded.
f_1	=	The fraction of the total contribution of ECL at the discharge point to be associated with the test tank effluent pathway, where f_2, f_3, f_4, and f_5, are the fractions for the Turbine Building Sump, Steam Generator Blowdown, Primary Component Cooling and Water Treatment Effluent (Condensate Polishing System) pathways contribution to the total, respectively ($f_1+f_2+f_3+f_4+f_5 \leq 1$). Each of the fractions may be conservatively set administratively such that the sum of the fractions is less than 1. This additional margin can be used to account for the uncertainty in setpoint parameters such as estimated concentration of non gamma emitters that are based on previous composite analyses of the waste stream.

5.1.1.2 Liquid Waste Test Tank Monitor Setpoint Example

The radioactivity concentration of each radionuclide, C_i, in the waste test tank is determined by analysis of a representative grab sample obtained at the radwaste sample sink, and analyzed prior to release for gamma emitters, or as part of a composite analysis for non gamma emitters. The maximum allowable instantaneous effluent concentrations (i.e., ten time the ECL values in 10 CFR 20, Appendix B, Table 2) are used to illustrate a monitor setpoint determination. This setpoint example is based on the following data:

i	C_i (μCi/ml)	ECL_i (μCi/ml)	Ten Times ECL_I (μCi/ml)
Cs-134	2.15E-05	9E-07	9E-06
Cs-137	7.48E-05	1E-06	1E-05
Co-60	2.56E-05	3E-06	3E-05
H-3	1.50E-01	1E-03	1E-02

The minimum required dilution factor for this mix of radionuclides (including beta-emitters) is:

$$DF_{min} = \Sigma \frac{C_i}{10ECL_i} = \frac{2.15E-05}{9E-06} + \frac{7.48E-05}{1E-05} + \frac{2.56E-05}{3E-05} + \frac{1.50E-01}{1E-02} = 26$$

The release flow rate (F_m) from the waste test tanks can be set between 10 and 150 gpm. The cooling water tunnel discharge dilution flow rate (F_d) can typically vary from approximately 8,800 to 412,000 gpm depending on the operating status of the plant. In this example, if the dilution flow (F_d) is taken as 412,000 gpm, the maximum allowable discharge rate (F_{max}) is:

$$F_{max} = \frac{F_d}{DF_{min}}$$
$$= \frac{412,000}{26} \text{gpm}$$
$$= 15,846 \text{ gpm}$$

Next, the required dilution factor for only gamma emitters in the mix is:

$$DF_{min\gamma} = \Sigma (C_{i\gamma} / 10ECL_i) = \frac{2.15E-05}{9E-06} + \frac{7.48E-05}{1E-05} + \frac{2.56E-05}{3E-05} = 11$$

The maximum allowable discharge flow rate ($F_{max\gamma}$) considering only gamma emitters is given as:

$$F_{max\gamma} = \frac{F_d}{DF_{min\gamma}} = \frac{412,000}{11} \text{gpm} = 37,455 \text{ gpm}$$

With the selected release rate from the test tank set at 150 gpm, and the administrative flow fraction (f_{tt}) assumed in this example to be 0.7, the condition for the control concentration limits is met since:

F_m (equal to 150) < F_{max} (equal to 15,846 gpm) x f_{tt} (set at 0.7)
< F_{maxy} (equal to 37,455 gpm x F_{tt} (set at 0.7)

150 < 11092 < 26219

and the monitor response due to the mix of the gamma emitters is:

i	$C\gamma_i$ (µCi/ml)
Cs-134	2.15E-05
Cs-137	7.48E-05
Co-60	2.56E-05

$$\sum C_{\gamma i} = 1.22E-04\ \mu Ci/ml$$

Under these conditions, the alarm/trip setpoint for the liquid radwaste discharge monitor is:

$$R_{setpoint} = f_1 \times \frac{F_d}{F_m \times DF_{min\gamma}} \times \sum C\gamma i \qquad (5\text{-}1)$$

µCi/ml ( ) ( ) µCi/ml

$$R_{setpoint} = 0.4 \times \frac{412{,}000}{150 \times 11} \times 1.22E-04$$

$$= 1.22E-02\ \mu Ci/ml$$

In this example, the alarm/trip setpoint of the liquid radwaste discharge monitor can be put at 1.22E-02 µCi/ml above background. For the example, it is assumed that the test tank release pathway will be limited to only 40% of the total site discharge allowable concentration.

5.1.2 Turbine Building Drains Liquid Effluent Monitor (RM-6521)

The Turbine Building drains liquid effluent monitor continuously monitors the Turbine Building sump effluent line. The only sources to the Sump Effluent System are from the secondary steam system. Activity is expected in the Turbine Building Sump Effluent System only if a significant primary-to-secondary leak is present. If a primary-to-secondary leak is present, the activity in the sump effluent system would be comprised of only those radionuclides found in the secondary system, with reduced activity from decay and dilution.

The Turbine Building drains liquid effluent monitor provides alarm and automatic termination of release prior to exceeding ten times the concentration limits specified in 10 CFR 20, Appendix B, Table 2, Column 2 to the environment. The alarm setpoint for this monitor will be determined using the same method as that of the liquid waste test tank monitor if the total sump activity is greater than the ECL, as determined by the most recent grab sample isotopic analysis. If the total activity is less than the ECL, the setpoints of RM-6521 are calculated as follows:

$$\text{High Trip Monitor Setpoint } (\mu\text{Ci/ml}) = f_2\,(DF')\,(\text{"unidentified mix ECL"}\ (\mu\text{Ci/ml})) \qquad (5\text{-}21)$$

where:

$$DF' = \frac{\text{Circulating water flow rate (gpm)}}{\text{Flow rate pass-monitor (gpm)}}$$

unidentified mix ECL = most restrictive ECL value (μCi/ml) for an unidentified mixture or a mixture known not to contain certain radionuclides as given in 10 CFR 20, Appendix B, Notes.

f_2 = $1 - (f_1 + f_3 + f_4 + f_5)$; where the f values are described above.

In addition, a warning alarm setpoint can be determined by multiplying the high trip alarm point by an administratively selected fraction (as an example, 0.25).

$$\begin{pmatrix}\text{Warning Alarm}\\ \text{Monitor Setpoint}\\ (\mu\text{Ci/ml})\end{pmatrix} = \begin{pmatrix}\text{High Trip}\\ \text{Monitor Sepoint}\end{pmatrix}(0.25)$$

5.1.3 Steam Generator Blowdown Liquid Sample Monitor (RM-6519)

The steam generator blowdown liquid sample monitor is used to detect abnormal activity concentrations in the steam generator blowdown flash tank liquid discharge.

The alarm setpoint for the steam generator blowdown liquid sample monitor, when liquid is to be discharged from the site, will be determined using the same approach as the Turbine Building drains liquid effluent monitor.

For any liquid monitor, in the event that no activity is expected to be discharged, or can be measured in the system, the liquid monitor setpoint should be based on the most restrictive ECL for an "unidentified" mixture or a mixture known not to contain certain radionuclides given in 10 CFR 20, Appendix B notes.

5.1.4 PCCW Head Tank Rate-of-Change Alarm Setpoint

A rate-of-change alarm on the liquid level in the Primary Component Cooling Water (PCCW) head tank will work in conjunction with the PCCW radiation monitor to alert the operator in the Main Control Room of a leak to the Service Water System from the PCCW System. For the rate-of-change alarm, a setpoint is selected based on detection of an activity level equivalent to 10^{-8} μCi/ml in the discharge of the Service Water System. The activity in the PCCW is determined in accordance with the liquid sampling and analysis program described in Part A, Table A.6.1-1 of the ODCM and is used to determine the setpoint.

The rate-of-change alarm setpoint is calculated from:

$$RC_{set} = 1x10^{-8} \bullet SWF \bullet \frac{1}{PCC} \qquad (5\text{-}23)$$

$$\left(\frac{gal}{hr}\right) = \left(\frac{\mu Ci}{ml}\right)\left(\frac{gal}{hr}\right)\left(\frac{ml}{\mu Ci}\right)$$

where:

RC_{set}	=	The setpoint for the PCCW head tank rate-of-change alarm (in gallons per hour).
$1x10^{-8}$	=	The minimum detectable activity level in the Service Water System due to a PCCW to SWS leak (μCi/ml).
SWF	=	Service Water System flow rate (in gallons per hour).
PCC	=	Primary Component Cooling Water measured (decay corrected) gross radioactivity level (μCi/ml).

As an example, assume a PCCW activity concentration of $1x10^{-5}$ μCi/ml with a service water flow rate of only 80 percent of the normal flow of 21,000 gpm. The rate-of-change setpoint is then:

$$RC_{set} = 1x10^{-8} \frac{\mu Ci}{ml} \bullet 1.0x10^{6} \text{ gph } (1/1x10^{-5} \frac{\mu Ci}{ml})$$

$$RC_{set} = 1000 \text{ gph}$$

As a result, for other PCCW activities, the RC_{set} which would also relate to a detection of a minimum service water concentration of $1x10^{-8}$ μCi/ml can be found from:

$$RC_{set} = \frac{1x10^{-5} \text{ x } \mu Ci/ml \text{ x } 1000 \text{ gph}}{PCC} \qquad (5\text{-}24)$$

5.1.5 PCCW Radiation Monitor

The PCCW radiation monitor will alert the operator in the Main Control Room of a leak to the PCCW System from a radioactively contaminated system.

The PCCW radiation monitor alarm is based on a trend of radiation levels in the PCCW System. The background radiation of the PCCW is determined by evaluating the radiation levels over a finite time period. The alert alarm setpoint is set at 1.5 x background, and the high alarm setpoint is set at 2 x background, per Technical Specification Table 3.3-6.

5.1.6 Water Treatment Liquid Effluent (CPS Rad Monitor RM-6473)

The Water Treatment Liquid Effluent monitor is used to detect abnormal activity concentrations in waste liquid discharges to the Transition Structure from tank Tk-32 (CPS Neutralization Tank), tank Tk-274 (Low Conductivity Tank) and megarinse wash water from the Condensate Polishing System (CPS) demineralizer regeneration cycle.

The CPS Rad monitor provides alarm and automatic termination of release prior to exceeding the concentration limits specified in 10CFR20, Appendix B, Table 2, Column 2 to the environment. The alarm setpoint for this monitor will be determined using the same method as that of the Liquid Waste Test Tank Monitor (see Section 5.1.1.1) if the total activity expected to be discharged is greater than 10 percent of ECL, as determined by the most recent grab sample isotopic analysis. If the total activity is less than 10 percent of ECL, the setpoints of RM-6473 can be calculated as follows:

High Trip Monitor Setpoint (μCi/ml) = f_5 (DF′) ("unidentified mix ECL" (μCi/ml))

where:

$$DF' = \frac{\textbf{Circulating water flow rate (gpm)}}{\textbf{Flow rate pass- monitor (gpm)}}$$

unidentified mix ECL = most restrictive ECL value (μCi/ml) for an unidentified mixture or a mixture known not to contain certain radionuclides as given in 10CFR20, Appendix B, Notes.

f_5 = $1 - (f_1 + f_2 + f_3 + f_4)$; where the f values are described in Section 5.1.1.1 above.

In addition, a warning alarm setpoint can be determined by multiplying the high trip alarm point by an administratively selected fraction (as an example, 0.25).

$$\begin{pmatrix}\textbf{Warning Alarm}\\ \textbf{Monitor Setpoint}\\ \textbf{(}\mu\textbf{Ci/ml)}\end{pmatrix} = \begin{pmatrix}\textbf{High Trip}\\ \textbf{Monitor Sepoint}\end{pmatrix} \textbf{(0.25)}$$

5.2 Gaseous Effluent Instrumentation Setpoints

Part A Control C.5.2 requires that the radioactive gaseous effluent instrumentation in Table A.5.2-1 of Part A have their alarm setpoints set to insure that Part A Control C.7.1.1 is not exceeded.

5.2.1 Plant Vent Wide-Range Gas Monitors (RM-6528-1, 2 and 3)

The plant vent wide-range gas monitors are shown on Figure B.6-2.

5.2.1.1 Method to Determine the Setpoint of the Plant Vent Wide Range Gas Monitors (RM-6528-1, 2 and 3)

The maximum allowable setpoint for the plant vent wide-range gas monitor (readout response in μCi/sec) is set by limiting the off-site noble gas dose rate to the total body or to the skin, and is denoted $R_{setpoint}$. $R_{setpoint}$ is the lesser of:

$$R_{tb} = 588 \frac{1}{DFB_c} f_v \qquad (5\text{-}5)$$

$$\mu Ci/sec = \left(\frac{mrem\text{-}\mu Ci\text{-}m^3}{yr\text{-}pCi\text{-}sec}\right)\left(\frac{pCi\text{-}yr}{mrem\text{-}m^3}\right)$$

and:

$$R_{skin} = 3{,}000 \frac{1}{DF'_c} f_v \qquad (5\text{-}6)$$

$$\mu Ci/sec = \left(\frac{mrem}{yr}\right)\left(\frac{\mu Ci\text{-}yr}{mrem\text{-}sec}\right)$$

where:

R_{tb}	=	Response of the monitor at the limiting total body dose rate (μCi/sec)
588	=	$\frac{500}{(1E+06)\ (8.5E-07)} \left(\frac{mrem\text{-}\mu Ci\text{-}m^3}{yr\text{-}pCi\text{-}sec}\right)$
500	=	The offsite limiting total body dose rate (mrem/yr) from all release points
1E+06	=	Number of pCi per μCi (pCi/μCi)
8.5E-07	=	$[X/Q]^{\gamma}$, maximum off-site long-term average gamma atmospheric dispersion factor for primary vent stack releases (sec/m^3)

DFB_c = Composite total body dose factor (mrem-m^3/pCi-yr)

$$= \frac{\Sigma \dot{Q}_i DFB_i}{\Sigma \dot{Q}_i} \qquad (5\text{-}7)$$

f_v = The fraction of the offsite limiting total body dose rate to be administratively assigned to the plant vent ($f_v \leq 1 - f_g$, where f_g is the fraction of the limiting dose rate to be assigned to monitored ground level releases)

$\dot{Q}_i$ = The relative release rate of noble gas "i" in the mixture, for each noble gas identified or postulated to be in the off-gas (μCi/sec)

DFB_i = Total body dose factor (see Table B.1-10) (mrem-m^3/pCi-yr)

R_{skin} = Response of the monitor at the limiting skin dose rate (μCi/sec)

3,000 = The offsite limiting skin dose rate (mrem/yr)

DF'_c = Composite skin dose factor (mrem-sec/μCi-yr)

$$= \frac{\Sigma \dot{Q}_i DF'_{i(e)}}{\Sigma \dot{Q}_i} \qquad (5\text{-}8)$$

$DF'_{i(e)}$ = Combined skin dose factor for elevated release point (see Table B.1-10) (mrem-sec/μCi-yr)

5.2.1.2 Plant Vent Wide Range Gas Monitor Setpoint Example for Limiting Case

The following setpoint example for the plant vent wide range gas monitors demonstrates the use of equations 5-5 and 5-6 for determining setpoints. Evaluations of potential releases rates associated with the limiting offsite dose rates (Control C.7.1.1.a) have been made considering different noble gas mixes related to normal operations, observed periods with fuel defects, and potential UFSAR accident conditions. The bounding noble gas mix case for setpoint alarm indications was found to be related to projected fuel gap activity at the time of shutdown from power operations (UFSAR Table 15.7-20). By setting the maximum alarm setpoint in accordance with this assumed mix, other potential or realistic release conditions will not create an effluent discharge at or above the limiting offsite dose rates without the monitor going into alarm.

This limiting setpoint example is based on the following data (see Table B.1-10 for $DFB_{i(e)}$ and $DF'_{i(e)}$):

i	$\dot{Q}_i$ $(\frac{\mu Ci}{sec})$	DFB_i $(\frac{mrem\text{-}m^3}{pCi\text{-}yr})$	$DF'_{i(e)}$ $(\frac{mrem\text{-}sec}{\mu Ci\text{-}yr})$
Xe-138	2.52E+02	8.83E-03	1.20E-02
Kr-87	7.90E+01	5.92E-03	1.38E-02
Kr-88	1.15E+02	1.47E-02	1.62E-02
Kr-85m	4.49E+01	1.17E-03	2.35E-03
Xe-135	6.82E+01	1.81E-03	3.33E-03
Xe-133	3.23E+02	2.94E-04	5.83E-04
Kr-85	4.13E+00	1.61E-05	1.11E-03
Xe-131m	1.15E+00	9.15E-05	5.37E-04
Xe-133m	4.67E+01	2.51E-04	1.12E-03
Xe-135m	6.64E+01	3.12E-03	3.74E-03

$$DFB_c = \frac{\Sigma\ \dot{Q}_i\ DFB_i}{\Sigma\ \dot{Q}_i} \qquad (5\text{-}7)$$

$$\Sigma\ \dot{Q}_i\ DFB_i = (2.52E{+}02)(8.83E{-}03) + (7.90E{+}01)(5.92E{-}03) + (1.15E{+}02)\ (1.47E{-}02)$$

$$+ (4.49E{+}01)(1.17E{-}03) + (6.82E{+}01)(1.81E{-}03) + (3.23E{+}02)\ (2.94E{-}04)$$

$$+ (4.13E{+}00)(1.61E{-}05) + (1.15E{+}00)(9.15E{-}05) + (4.67E{+}01)\ (2.51E{-}04)$$

$$+ (6.64E{+}01)\ (3.12E{-}03)$$

$$= 4.86E{+}00\ (\mu Ci\text{-}mrem\text{-}m^3/sec\text{-}pCi\text{-}yr)$$

$$\Sigma\ \dot{Q}_i = 2.52E{+}02 + 7.90E{+}01 + 1.15E{+}02 + 4.49E{+}01 + 6.82E{+}01$$

$$+ 3.23E{+}02 + 4.14E{+}00 + 1.16E{+}00 + 4.67E{+}01 + 6.64E{+}01$$

$$= 1.00E{+}03\ \mu Ci/sec$$

$$DFB_c = \frac{4.86E{+}00}{1.00E{+}03}$$

$$= 4.86E{-}03\ (mrem\text{-}m^3/pCi\text{-}yr)$$

and therefore:

$$R_{tb} = 588\ \frac{1}{DFB_c}\ f_v \qquad (5\text{-}5)$$

$$= (588)\ \frac{1}{(4.86E{-}03)}\ 0.7$$

$$= 8.47E{+}04\ \mu Ci/sec$$

and next;

$$DF'_c = \frac{\Sigma\ \dot{Q}_i\ DF'_i}{\Sigma\ \dot{Q}_i} \qquad (5\text{-}8)$$

$$\begin{aligned}
\Sigma\ \dot{Q}_i\ DF'_i &= (2.52E{+}02)(1.20E{-}02) + (7.90E{+}01)(1.38E{-}02) + (1.15E{+}02)\ (1.62E{-}02) \\
&+ (4.49E{+}01)(2.35E{-}03) + (6.82E{+}01)(3.33E{-}03) + (3.23E{+}02)\ (5.83E{-}04) \\
&+ (4.13E{+}00)(1.11E{-}03) + (1.15E{+}00)(5.37E{-}04) + (4.67E{+}01)\ (1.12E{-}03) \\
&+ (6.64E{+}01)\ (3.74E{-}03) \\
&= 6.80E{+}00\ (\mu Ci\text{-}mrem\text{-}sec/sec\text{-}\mu Ci\text{-}yr)
\end{aligned}$$

$$DF'_c = \frac{6.80E+00}{1.00E+03}$$

$$= 6.80E-03 \quad (mrem-sec/\mu Ci-yr)$$

and therefore:

$$R_{skin} = 3{,}000\ \frac{1}{DF'_c}\ f_v \qquad (5\text{-}6)$$

$$= (3{,}000) \quad \left(\frac{1}{6.80E-03}\right)\ 0.7$$

$$= 3.09E{+}05\ \mu Ci/sec$$

The setpoint, $R_{setpoint}$, is the lesser of R_{tb} and R_{skin}. For the limiting noble gas mixture, R_{tb} is less than R_{skin}, indicating that the total body dose rate is more restrictive. Therefore, the plant vent wide-range gas monitor should be set at no more than 8.47E+04 µCi/sec above background, or at some administrative fraction of the above value.

5.2.2 Waste Gas System Monitors (RM-6504 and RM-6503)

Process radiation monitors in the waste gas system provide operational information on the performance of the system before its discharge is combined and diluted with other gas flows routed to the plant vent for release to the environment.

The setpoints for the waste gas system monitors are administratively set as small multiples of the expected activity concentration to provide operational control over unexpected changes in gas discharges from the system. Typically, the alert alarm setpoint for both monitors is placed at 1.5 times the expected activity concentration passing the monitor, with the high alarm trip set at 2.0 times the expected concentration flow.

Under all conditions, the maximum allowable alarm trip shall not exceed a concentration equivalent to 62.5 $\mu Ci/cm^3$. This concentration limit, based on system design flow of 1.2 cfm, assures that any release from the waste gas system to the plant vent will not exceed the site boundary dose rate limits of Part A Control C.7.1.1.a.

5.2.3 Main Condenser Air Evacuation Monitor (RM-6505)

The process radiation monitor on the main condenser air evacuation system provides operational information about the air being discharged. The discharge typically occurs either directly from the turbine building during start up (hogging mode) or through the plant vent during normal operations. During maintenance activities or other temporary operational conditions, discharges to the turbine roof may also occur. This process monitor is also used as an indicator of potential releases from the Turbine Gland Seal Condenser exhaust. Early indications of a potential release (i.e., monitor count rate at twice the normal background) should be evaluated by collecting a grab sample of the exhausts from both the main condenser and the Turbine Gland Seal Condenser.

The operational setpoints for the air evacuation monitor are administratively set as small multiples of the expected background response of the detector to provide operational control over unexpected changes in the activity discharged from the system. Typically, the alert setpoint is 1.5 times background, with the high alarm set at 2 times background.

Maximum allowable setpoint determinations assure that the site boundary dose rate limits of Part A Control C.7.1.1.a will not be exceeded. For the air evacuation detector an efficiency of 1.87E + 08 cpm-$cm^3/\mu Ci$, (the AR–41 response value determined by HPSTID 20-021), flow rates of 10 to 50 cfm and 10,000 cfm for the normal and hogging modes of operation, respectively, and assuming that all the response is due to the most restrictive noble gas mixture associated with fuel gap activity inventory at the end of power operations (same mixture as used for the limiting mixture for the plant vent Wide Range Gas Monitor setpoint given in section 5.2.1.2), the following examples illustrate the calculation of the limiting setpoint for different operational conditions.

Case 1: For start-up operations (i.e., 10,000 cfm hogging flow to the Turbine Building roof), the maximum allowable alarm setpoint is calculated as:

$$R_{AE} = 147 \frac{1}{DFB_c} f_g \; f_{gland}$$

where :

R_{AE} = Release rate equivalent to the assigned fraction of the limiting offsite total body dose rate (μCi/sec)

$$147 = \frac{500}{(1E+06)(3.4E-06)} \left(\frac{mrem - \mu Ci - m^3}{yr - pCi - sec}\right)$$

500 = The site boundary limiting total body dose rate (mrem/yr) from all release points

1E+06 = Number of pCi per μCi (pCi/μCi)

3.4E-06 = Maximum off-site long-term average gamma atmospheric dispersion factor for ground level releases (sec/m^2)

DFB_c = Composite total body dose factor (defined for the WRGM in Section 5.2.1.2 to be equal to 4.86E-03 [mrem-m^3 /pCi-yr] for the limiting fuel gap activity mix)

f_g = The fraction of the site boundary total body dose rate limit to be administratively assigned to monitored ground level releases (for this illustration = 0.3) such that the combination of the plant vent fraction (f_v) and ground fraction (f_g) is less than or equal to 1 ($f_g \leq 1 - f_v$).

f_{gland} = Release reduction factor to be administratively assigned to account for potential unmonitored contributions from the Turbine Gland Seal Condenser exhaust (for this illustration = 0.7).

$$R_{AE} = 147 \frac{1}{4.86E - 03} (0.3)(0.7)$$

$$= 6.36E+03 \; \mu Ci/sec \text{ release rate limit}$$

and for the 10,000 cfm (4.72E+06 cm^3/sec) exhaust flow, the count rate response of the air evacuation monitor would be:

$$\text{Monitor Response} = \frac{R_{AE}}{4.72E+06 cm^3/sec} \; 1.87E+08 \text{ cpm-cm3}/\mu Ci$$

$$= (6.36E+03)(1.87E+08) / (4.72E+06)$$

$$= 2.520E+05 \text{ cpm}$$

Case 2: As an extension of Case 1 which assumed the full startup hogging flow was released to the Turbine Building roof, maintenance requirements could direct normal operating main condenser offgas flow (assume 50 cfm or equivalent 2.36E+04 cm3/sec) to the Turbine Building Roof (ground level release point) instead of the elevated main plant vent. In this situation, the same release rate limit as calculated above (i.e., 6.36E+03 μCi/sec) would apply. However, the reduced gas flow from 10,000 cfm down to 50 cfm would permit a higher alarm setpoint to be used.

$$\text{Monitor Response} = \frac{R_{AE}}{2.36E+04 cm^3/sec} \; 1.87E+08 \text{ cpm-cm}^3/\mu Ci$$

$$= (6.36E+03)(1.87E+08) / (2.36E+04)$$

$$= 5.04E+07 \text{ cpm}$$

Case 3: For normal operations which direct main condenser offgas flow (assume 50 cfm or equivalent 2.36E+04 cm3/sec) to be released to the atmosphere via the main plant vent, the maximum allowable alarm setpoint would be:

$$R_{AE} = 588 \; \frac{1}{DFB_c} \; f_v \; f_{gland}$$

where :

R_{AE} = Release rate equivalent to the assigned fraction of the limiting offsite total body dose rate (μCi/sec)

$$588 = \frac{500}{(1E+06)(8.5E-07)} \left(\frac{mrem - \mu Ci - m^3}{yr - pCi - sec}\right)$$

5.8E-07 = Maximum off-site long-term average gamma atmospheric dispersion factor for elevated (mixed mode) releases (sec/m^2)

DFBc = Composite total body dose factor (defined for the WRGM in Section 5.2.1.2 to be equal to 4.86E-03 [mrem-m3 /pCi-yr] for the limiting fuel gap activity mix)

f_{gland} = Same as listed above (i.e., 0.7)

f_v = The fraction of the site boundary total body dose rate limit to be administratively assigned to plant vent releases such that the combination of the plant vent fraction (f_v) and ground fraction (f_g) is less than or equal to 1 ($f_v \leq 1 - f_g$). For the case that main condenser offgas is discharged to the main plant vent, there is no ground release fraction to be assigned (i.e., $f_g = 0$), and f_v maybe set at 1.

$$R_{AE} = 588 \; \frac{1}{4.86E-03} \; 0.7$$

$$= 8.47E+04 \; \mu Ci/sec \text{ release rate limit}$$

and for the 50 cfm (2.36E+06 cm3/sec) Main Condenser offgas exhaust flow, the count rate response of the air evacuation monitor would be:

$$\text{Monitor Response} = \frac{R_{AE}}{2.36E+06 cm^3/sec} \; 1.87E+08 \text{ cpm-cm}^3/\mu Ci$$

$$= (8.47E+04)\,(1.87E+08) / (2.36E+04)$$

$$= 6.71E+08 \text{ cpm}$$

The operation of the Main Condenser Evacuation System assumes 670 lbs./hour of steam flow through the Turbine Gland Seal Condenser exhaust (very small fraction of total steam flow), 1.5E+07 lbs./hour steam flow to the main condenser, and that the Turbine Gland Seal Condenser exhaust mostly air at a flow rate of 1,800 cfm which goes directly to the Turbine Building Vents (does not pass RM-6505). The main condenser offgas which goes past the Air Evacuation monitor during power operations is combined with other plant ventilation and process gas streams before being monitored by the WRGM and discharged to the atmosphere via the Plant Vent as a single release point.

The maximum allowable setpoints during startup and normal power operations may be recalculated based on identified changes in detector efficiency, discharge flow rate, radionuclide mix distribution, or administrative apportionment of potential contributions from the plant vent and ground level release points following the methods identified in Part B, Section 8.5.

6.0 LIQUID AND GASEOUS EFFLUENT STREAMS, RADIATION MONITORS AND RADWASTE TREATMENT SYSTEMS

Figure B.6-1 shows the liquid effluent streams, radiation monitors and the appropriate Liquid Radwaste Treatment System. Figure B.6-2 shows the gaseous effluent streams, radiation monitors and the appropriate Gaseous Radwaste Treatment System.

For more detailed information concerning the above, refer to the Seabrook Station Final Safety Analysis Report, Sections 11.2 (Liquid Waste System), 11.3 (Gaseous Waste System) and 11.5 (Process and Effluent Radiological Monitoring and Sampling System).

The turbine gland seal condenser exhaust iodine and particulate gaseous releases will be determined by continuously sampling the turbine gland seal condenser exhaust. The noble gas releases will be determined by periodic noble gas grab samples. A ratio of main condenser air evacuation exhaust and turbine gland seal condenser exhaust noble gas will be determined periodically.

Figure B.6-1
Liquid Effluent Streams, Radiation Monitors, and Radwaste Treatment System at Seabrook Station

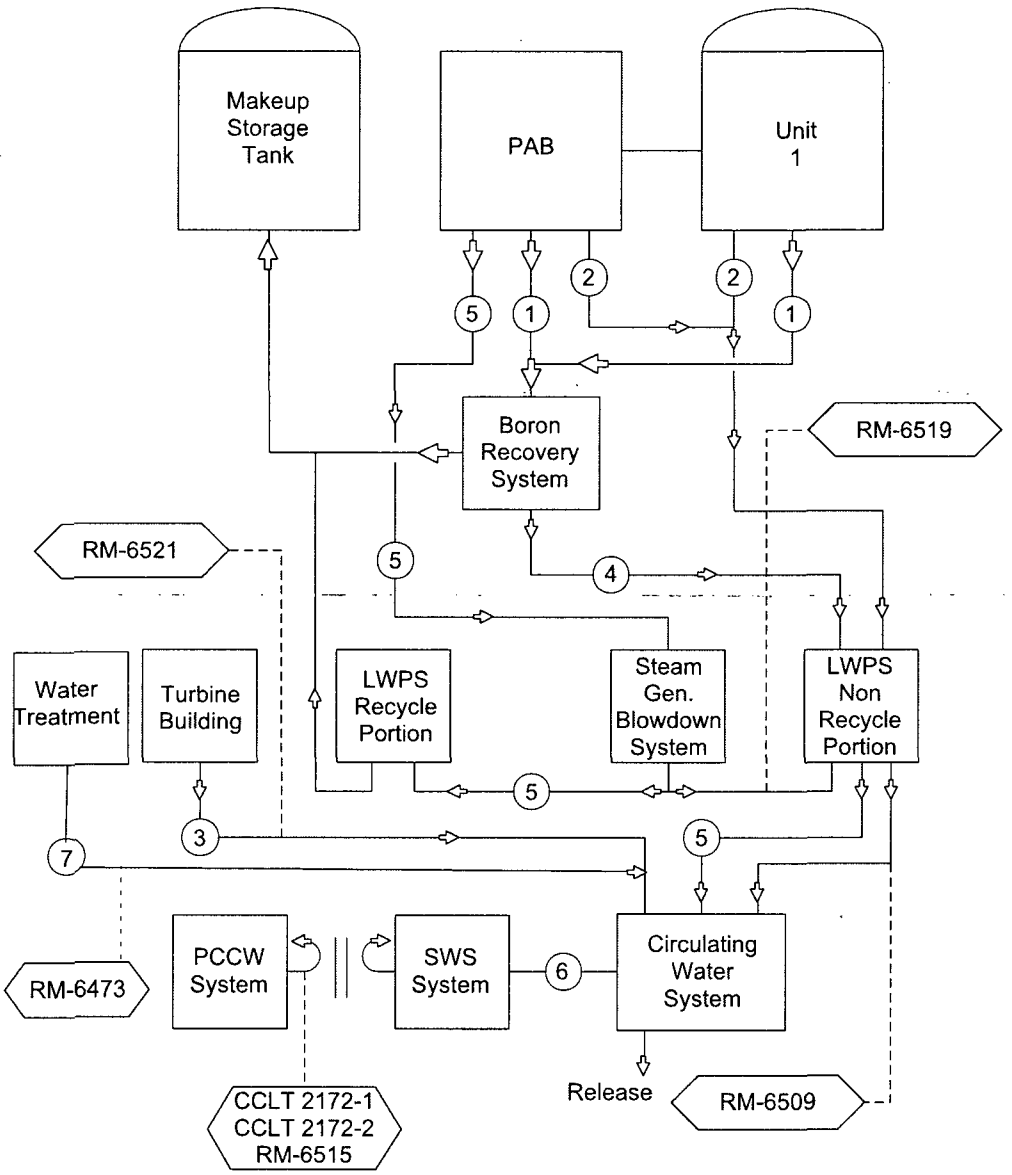

1. CVCS Letdown Diversion
   Equipment Drainage
   Equipment Leakage
2. PAB Floor Drainage
   Non-Recyclable and Misc Containment Sumps Laboratory Drainage
   Decontamination Water
3. Turbine Building Sump
4. Tritium Control Release
5. Secondary Side Steam Generator Blowdown
6. Service Water System
7. Water Treatment Liquid Effluent (includes condensate polishing system)

RM Radiation Monitor

CCLT Level Transmitter

ODCM61 5/26/04

Figure B.6-2
Gaseous Effluent Streams, Radiation Monitors, and Radwaste Treatment System at Seabrook Station

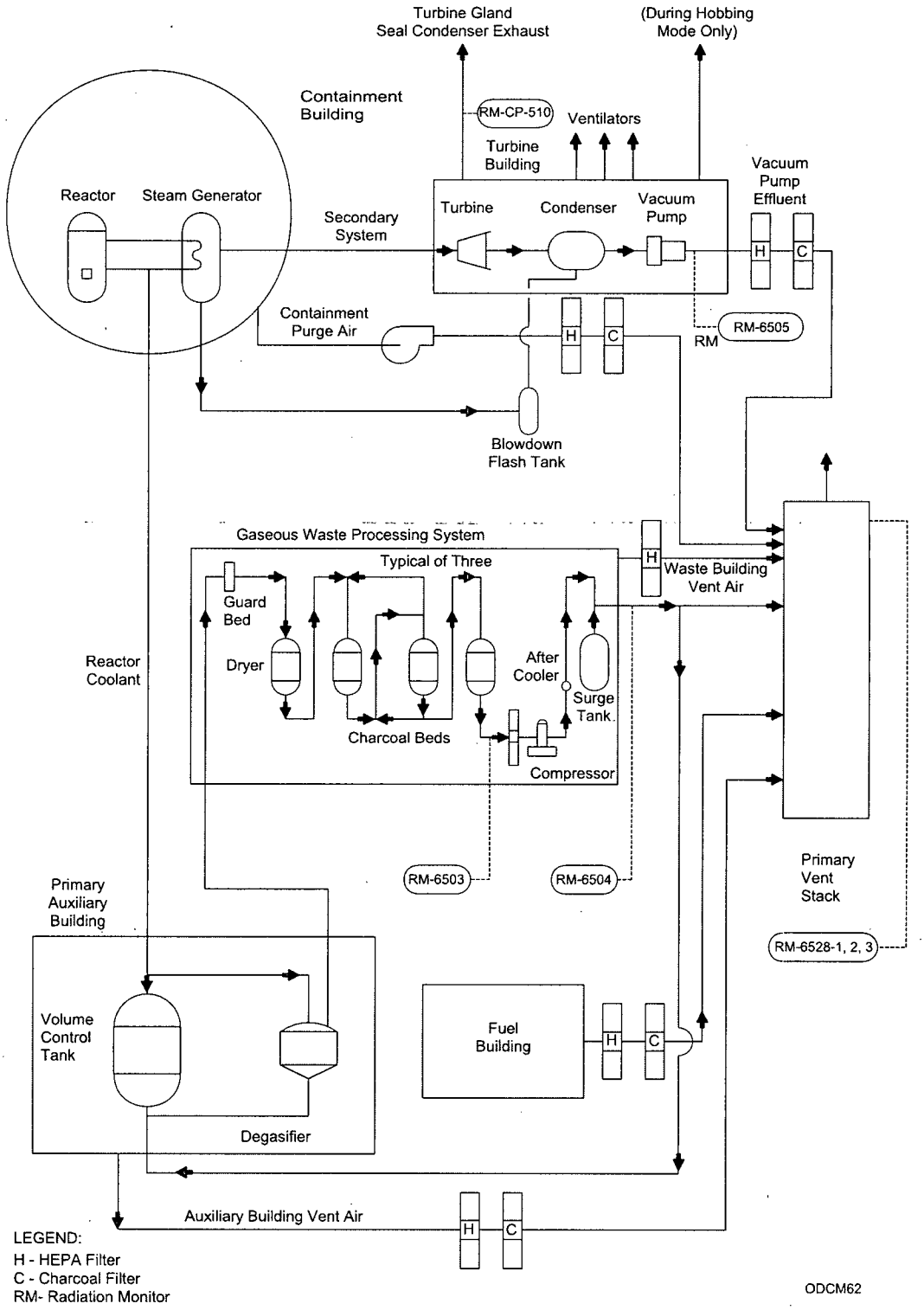

7.0 BASES FOR DOSE CALCULATION METHODS

7.1 Liquid Release Dose Calculations

This section serves: (1) to document the development and conservative nature of Method I equations to provide background information to Method I users, and (2) to identify the general equations, parameters and approaches to Method II-type dose assessments. Appendix C provides the bases for the EMS software which is used to implement the dose and dose rate calculations indicated as Method IA.

Method I may be used to show that the Part A RECP which limit off-site total body dose from liquids (C.6.2.1 and C.6.3.1) have been met for releases over the appropriate periods. The quarterly and annual dose limits in Part A Control C.6.2.1 are based on the ALARA design objectives in 10CFR50, Appendix I Subsection II A. The minimum dose values noted in Part A Control C.6.3.1 are "appropriate fractions," as determined by the NRC, of the design objective to ensure that radwaste equipment is used as required to keep off-site doses ALARA.

Method I was developed such that "the actual exposure of an individual ... is unlikely to be substantially underestimated" (10CFR50, Appendix I). The definition, below, of a single "critical receptor" (a hypothetical or real individual whose behavior results in a maximum potential dose) provides part of the conservative margin to the calculation of total body dose in Method I. Method II allows that actual individuals, associated with identifiable exposure pathways, be taken into account for any given release. In fact, Method I was based on a Method II analysis for a critical receptor assuming all principal pathways present instead of any real individual. That analysis was called the "base case;" it was then reduced to form Method I. The general equations used in the base case analysis are also used as the starting point in Method II evaluations. The base case, the method of reduction, and the assumptions and data used are presented below.

The steps performed in the Method I derivation follow. First, the dose impact to the critical receptor [in the form of dose factors DFL_{itb} (mrem/μCi)] for a unit activity release of each radioisotope in liquid effluents was derived. The base case analysis uses the general equations, methods, data and assumptions in Regulatory Guide 1.109 (Equations A-3 and A-7, Reference A). The liquid pathways contributing to an individual dose are due to consumption of fish and invertebrates, shoreline activities, and swimming and boating near the discharge point. A nominal operating plant discharge flow rate of 918 ft^3/sec was used with a mixing ratio of 0.10. The mixing ratio of 0.10 corresponds to the minimum expected prompt dilution or near-field mixing zone created at the ocean surface directly above the multiport diffusers. (Credit for additional dilution to the outer edge of the prompt mixing zone which corresponds to the 10F surface isotherm (mixing ratio .025) can be applied in the Method II calculation for shoreline exposures only since the edge of this isotherm typically does not reach the shoreline receptor points during the tidal cycle. The mixing ratio for aquatic food pathways in Method II assessments shall be limited to the same value (0.10) as applied in Method I for near-field mixing, or prompt dilution only.

The requirements for the determination of radiological impacts resulting from releases in liquid effluents is derived from 10CFR50, Appendix I. Section III.A.2 of Appendix I indicates that in making the assessment of doses to hypothetical receptors, "The Applicant may take account of any real phenomenon or factors actually affecting the estimate of radiation exposure, including the characteristics of the plant, modes of discharge of radioactive materials, physical processes tending to attenuate the quantity of radioactive material to which an individual would be exposed, and the effects of averaging exposures over time during which determining factors may fluctuate." In accessing the liquid exposure pathways that characterize Seabrook Station, the design and physical location of the Circulating Water Discharge System needs to be considered within the scope of Appendix I.

Seabrook utilizes an offshore submerged multiport diffuser discharger for rapid dissipation and mixing of thermal effluents in the ocean environment. The 22-port diffuser section of the Discharge System is located in approximately 50 to 60 feet of water with each nozzle 7 to 10 feet above the sea floor. Water is discharged in a generally eastward direction away from the shoreline through the multiport diffuser, beginning at a location over one mile due east of Hampton Harbor inlet. This arrangement effectively prevents the discharge plume (at least to the 1 degree or 40 to 1 dilution isopleth) from impacting the shoreline over the tidal cycle.

Eleven riser shafts with two diffuser nozzles each form the diffuser and are spaced about 100 feet apart over a distance of about 1,000 feet. The diffusers are designed to maintain a high exit velocity of about 7.5 feet per second during power operations. Each nozzle is angled approximately 20 degrees up from the horizontal plane to prevent bottom scour. These high velocity jets passively entrain about ten volumes of fresh ocean water into the near field jet mixing region before the plume reaches the water surface. This factor of 10 mixing occurs in a very narrow zone of less than 300 feet from the diffuser by the time the thermally buoyant plume reaches the ocean surface. This high rate of dilution occurs within about 70 seconds of discharge from the diffuser nozzles.

The design of the multiport diffuser to achieve a 10 to 1 dilution in the near field jet plume, and a 40 to 1 dilution in the near mixing zone associated with the 1 degree isotherm, has been verified by physical model tests (reference "Hydrothermal Studies of Bifurcated Diffuser Nozzles and Thermal Backwashing - Seabrook Station," Alden Research Laboratories, July 1977).

During shutdown periods, when the plant only requires service water cooling flow, the high velocity jet mixing created by the normal circulating water flow at the diffuser nozzles is reduced. However, mixing within the discharge tunnel water volume is significantly increased (factor of about 5) due to the long transit time (approximately 50 hours) for batch waste discharged from the plant to travel the three miles through the 19-foot diameter tunnels to the diffuser nozzles. Additional mixing of the thermally buoyant effluent in the near field mixing zone assures that an equivalent overall 10 to 1 dilution occurs by the time the plume reaches the ocean surface.

The dose assessment models utilized in the ODCM are taken from NRC Regulatory Guide 1.109. The liquid pathway equations include a parameter (M_p) to account for the mixing ratio (reciprocal of the dilution factor) of effluents in the environment at the point of exposure. Table 1, in Regulatory Guide 1.109, defines the point of exposure to be the location that is anticipated to be occupied during plant lifetime, or have potential land and water usage and food pathways as could actually exist during the term of plant operation. For Seabrook, the potable water and land irrigation pathways do not exist since saltwater is used as the receiving water body for the circulating water discharge. The three pathways that have been factored into the assessment models are shoreline exposures, ingestion of invertebrates, and fish ingestion.

With respect to shoreline exposures, both the mixing ratios of 0.1 and 0.025 are extremely conservative since the effluent plume which is discharged over one mile offshore never reaches the beach where this type of exposure could occur. Similarly, bottom dwelling invertebrates, either taken from mud flats near the shoreline or from the area of diffuser, are not exposed to the undiluted effluent plume. The shore area is beyond the reach of the surface plume of the discharge, and the design of the upward directed discharge nozzles along with the thermal buoyancy of the effluent, force the plume to quickly rise to the surface without affecting bottom organisms.

Consequentially, the only assumed exposure pathway which might be impacted by the near field plume of the circulating water discharge is finfish. However, the mixing ratio of 0.1 is very conservative because fish will avoid both the high exit velocity provided by the discharge nozzles and the high thermal temperature difference between the water discharged from the diffuser and the ambient water temperature in the near field. In addition, the dilution factor of 10 is achieved within 70 seconds of discharge and confined to a very small area, thus prohibiting any significant quantity of fish from reaching equilibrium conditions with radioactivity concentrations created in the water environment.

The mixing ratio of 0.025, which corresponds to the 1 degree thermal near field mixing zone, is a more realistic assessment of the dilution to which finfish might be exposed. However, even this dilution credit is conservative since it neglects the plant's operational design which discharges radioactivity by batch mode. Batch discharges are on the order of only a few hours in duration several times per week and, thus, the maximum discharge concentrations are not maintained in the environment long enough to allow fish to reach equilibrium uptake concentrations as assumed in the dose assessment modeling. Not withstanding the above expected dilution credit afforded at the 1 degree isotherm, all Method II aquatic food pathway dose calculations shall conservatively assume credit for prompt dilution only with an $M_p = 0.10$. When dose impacts from the fish and invertebrate pathways are then added to the conservative dose impacts derived for shoreline exposures, the total calculated dose is very unlikely to have underestimated the exposure to any real individual.

The recommended value for dilution of 1.0 given in NUREG-0133 is a simplistic assumption provided so that a single model could be used with any plant design and physical discharge arrangement. For plants that utilize a surface canal-type discharge structure where little entrainment mixing in the environment occurs, a dilution factor of 1.0 is a reasonable assumption. However, in keeping with the guidance provided in Appendix I to 10CFR50, Seabrook has determine site-specific mixing ratios which factor in its plant design.

The transit time used for the aquatic food pathway was 24 hours, and for shoreline activity 0.0 hours. Table B.7-1 outlines the human consumption and use factors used in the analysis. The resulting, site-specific, total body dose factors appear in Table B.1-11. Appendix A provides an example of the development of a Method I liquid dose conversion factor for site-specific conditions at Seabrook.

7.1.1 Dose to the Total Body

For any liquid release, during any period, the increment in total body dose from radionuclide "i" is:

$$\Delta D_{tb} = k\,Q_i\,DFL_{itb}$$

$$(\text{mrem})\ ()\ (\mu\text{Ci})\left(\frac{\text{mrem}}{\mu\text{Ci}}\right) \qquad (7\text{-}1)$$

where:

DFL_{itb} = Site-specific total body dose factor (mrem/μCi) for a liquid release. It is the highest of the four age groups. See Table B.1-11.

Q_i = Total activity (μCi) released for radionuclide "i".

k = $918/F_d$ (dimensionless); where F_d is the average dilution flow of the Circulating Water System at the point of discharge from the multiport diffuser (in ft^3/sec).

Method I is more conservative than Method II in the region of the Part A dose limits because the dose factors DFL_{itb} used in Method I were chosen for the base case to be the highest of the four age groups (adult, teen, child and infant) for that radionuclide. In effect each radionuclide is conservatively represented by its own critical age group.

7.1.2 Dose to the Critical Organ

The methods to calculate maximum organ dose parallel to the total body dose methods (see Part B, Section 7.1.1).

For each radionuclide, a dose factor (mrem/μCi) was determined for each of seven organs and four age groups. The largest of these was chosen to be the maximum organ dose factor (DFL_{imo}) for that radionuclide. DFL_{imo} also includes the external dose contribution to the critical organ.

For any liquid release, during any period, the increment in dose from radionuclide "i" to the maximum organ is:

$$\Delta D_{mo} = k\,Q_i\,DFL_{imo}$$

$$(\text{mrem})\ ()\ (\mu\text{Ci})\left(\frac{\text{mrem}}{\mu\text{Ci}}\right) \qquad (7\text{-}2)$$

where:

DFL_{imo}	=	Site-specific maximum organ dose factor (mrem/μCi) for a liquid release. See Table B.1-11.
Q_i	=	Total activity (μCi) released for radionuclide "i".
k	=	$918/F_d$ (dimensionless); where F_d is the average dilution flow of the Circulating Water System at the point of discharge from the multiport diffuser (in ft^3/sec).

Table B.7-1
Usage Factors for Various Liquid Pathways at Seabrook Station

(From Reference A, Table E-5*, except as noted. Zero where no pathway exists)

AGE	VEG.	LEAFY VEG.	MILK	MEAT	FISH	INVERT.	POTABLE WATER	SHORELINE	SWIMMING**	BOATING**
	(KG/YR)	(KG/YR)	(LITER/YR)	(KG/YR)	(KG/YR)	(KG/YR)	(LITER/YR)	(HR/YR)	(HR/YR)	(HR/YR)
Adult	0.00	0.00	0.00	0.00	21.00	5.00	0.00	334.00***	8.00	52.00
Teen	0.00	0.00	0.00	0.00	16.00	3.80	0.00	67.00	45.00	52.00
Child	0.00	0.00	0.00	0.00	6.90	1.70	0.00	14.00	28.00	29.00
Infant	0.00	0.00	0.00	0.00	0.00	0.00	0.00	0.00	0.00	0.00

* Regulatory Guide 1.109.

** HERMES; "A Digital Computer Code for Estimating Regional Radiological Effects from Nuclear Power Industry," HEDL, December 1971. Note, for Method II analyses, these pathways need not be evaluated since they represent only a small fraction of the total dose contribution associated with the other pathways.

*** Regional shoreline use associated with mudflats - Maine Yankee Atomic Power Station Environmental Report.

7.2 Gaseous Release Dose Calculations

7.2.1 Total Body Dose Rate From Noble Gases

This section serves: (1) to document the development of the Method I equation, (2) to provide background information to Method I users, and (3) to identify the general equations, parameters and approaches to Method II-type dose rate assessments.

Method I may be used to show that the Part A Controls which limit total body dose rate from noble gases released to the atmosphere (Part A Control C.7.1.1) has been met for the peak noble gas release rate.

Method I was derived from general equation B-8 in Regulatory Guide 1.109 as follows:

$$\dot{D}_{tb} = 1E+06[X/Q]^{\gamma} \sum_i \dot{Q}_i DFB_i \qquad (7\text{-}3)$$

$$\left(\frac{mrem}{yr}\right) = \left(\frac{pCi}{\mu Ci}\right)\left(\frac{sec}{m^3}\right)\left(\frac{\mu Ci}{sec}\right)\left(\frac{mrem\text{-}m^3}{pCi\text{-}yr}\right)$$

where:

$[X/Q]^{\gamma}$ = Maximum off-site receptor location long-term average gamma atmospheric dispersion factor.

$\dot{Q}_i$ = Release rate to the environment of noble gas "i" (μCi/sec).

DFB_i = Gamma total body dose factor, $\left(\frac{mrem\text{-}m^3}{pCi\text{-}yr}\right)$. See Table B.1-10. (Regulatory Guide 1.109, Table B-1).

Elevated and ground level gaseous effluent release points are addressed separately through the use of specific $[X/Q]^{\gamma}$ For an elevated gaseous effluent release point and off-site receptor, Equation 7-3 takes the form:

$$\dot{D}_{tb(e)} = (1E+06) * (8.5E-07) * \sum_i (\dot{Q}_i * DFB_i)$$

$$\left(\frac{mrem}{yr}\right) = \left(\frac{pCi}{\mu Ci}\right) * \left(\frac{sec}{m^3}\right) * \Sigma\left(\frac{\mu Ci}{sec} * \frac{mrem-m^3}{pCi-yr}\right)$$

which reduces to:

$$\dot{D}_{tb(e)} = 0.85 * \sum_i (\dot{Q}_i * DFB_i) \tag{3-3a}$$

$$\left(\frac{mrem}{yr}\right) = \left(\frac{pCi-sec}{\mu Ci-m^3}\right) \Sigma \left(\frac{\mu Ci}{sec}\right) * \left(\frac{mrem-m^3}{pCi-yr}\right)$$

For a ground level gaseous effluent release point and off-site receptor, Equation 7-3 takes the form:

$$\dot{D}_{tb(g)} = (1E+06) * (3.4E-06) * \sum_i (\dot{Q}_i * DFB_i)$$

which reduces to:

$$\dot{D}_{tb(g)} = 3.4 * \sum_i (\dot{Q}_i * DFB_i) \tag{3-3b}$$

$$\left(\frac{mrem}{yr}\right) = \left(\frac{pCi-sec}{\mu Ci-m^3}\right) \Sigma \left(\frac{\mu Ci}{sec}\right) * \left(\frac{mrem-m^3}{pCi-yr}\right)$$

The selection of critical receptor, outlined in Part B, Section 7.3 is inherent in the derived Method I, since the maximum expected off-site long-term average atmospheric dispersion factor is used. The sum of doses from both plant vent stack and ground level releases must be considered for determination of Technical Specification compliance. All noble gases in Table B.1-10 should be considered.

A Method II analysis could include the use of actual concurrent meteorology to assess the dose rates as the result of a specific release.

7.2.2 Skin Dose Rate from Noble Gases

This section serves: (1) to document the development of the Method I equation, (2) to provide background information to Method I users, and (3) to identify the general equations parameters and approaches to Method II-type dose rate assessments. The methods to calculate skin dose rate parallel the total body dose rate methods in Part B, Section 7.2.1. Only the differences are presented here.

Method I may be used to show that the Part A Controls which limit skin dose rate from noble gases released to the atmosphere (Part A Control C.7.1.1) has been met for the peak noble gas release rate.

The annual skin dose limit is 3,000 mrem (from NBS Handbook 69, Reference D, pages 5 and 6, is 30 rem/10). The factor of 10 reduction is to account for nonoccupational dose limits.

It is the skin dose commitment to the critical, or most limiting, off-site receptor assuming long-term site average meteorology and that the release rate reading remains constant over the entire year.

Method I was derived from the general equation B-9 in Regulatory Guide 1.109 as follows:

$$D^S = 1.11\, D^{\gamma}_{air} + 3.17\,E{+}04 \sum_i \dot{Q}_i\,[X/Q]\,DFS_i \tag{7-4}$$

$$\left(\frac{mrem}{yr}\right) = \left(\frac{mrem}{mrad}\right)\left(\frac{mrad}{yr}\right)\left(\frac{pCi\text{-}yr}{Ci\text{-}sec}\right)\frac{Ci}{yr}\left(\frac{sec}{m^3}\right)\left(\frac{mrem\text{-}m^3}{pCi\text{-}yr}\right)$$

where:

1.11 = Average ratio of tissue to air absorption coefficients (will convert mrad in air to mrem in tissue).

DFS_i = Beta skin dose factor for a semi-infinite cloud of radionuclide "i" which includes the attenuation by the outer "dead" layer of the skin.

$$D^{\gamma}_{air} = 3.17\,E{+}04 \sum_i \dot{Q}_i\,[X/Q]\,DF^{\gamma}_i \tag{7-5}$$

$$\left(\frac{mrad}{yr}\right) = \left(\frac{pCi-yr}{Ci\text{-}sec}\right) \quad \left(\frac{Ci}{yr}\right)\left(\frac{sec}{m^3}\right)\left(\frac{mrad\text{-}m^3}{pCi\text{-}yr}\right)$$

DF^{γ}_i = Gamma air dose factor for a uniform semi-infinite cloud of radionuclide "i".

Now it is assumed for the definition of (X/Q^{γ}) from Reference 8 that:

$$D^{\gamma}_{finite} = D^{\gamma}_{air}\,[X/Q]^{\gamma}/[X/Q] \tag{7-6}$$

$$\left(\frac{mrad}{yr}\right) = \left(\frac{mrad}{yr}\right)\left(\frac{sec}{m^3}\right)\left(\frac{m^3}{sec}\right)$$

and

$$Q_i = 31.54\ \dot{Q}_i \tag{7-7}$$

$$\left(\frac{Ci}{yr}\right) = \left(\frac{Ci\text{-}sec}{\mu Ci\text{-}yr}\right)\left(\frac{\mu Ci}{sec}\right)$$

so:

$$\dot{D}_{skin} = 1.11\ \ 1E+06 \left[X/Q \right]^{\gamma} \sum_i \dot{Q}_i * DF_i^{\gamma} \tag{7-8}$$

$$\left(\frac{mrem}{yr}\right) = \left(\frac{mrem}{mrad}\right)\left(\frac{pCi}{\mu Ci}\right)\left(\frac{sec}{m^3}\right)\left(\frac{\mu Ci}{sec}\right)\left(\frac{mrad - m^3}{pCi - yr}\right)$$

$$+1E+06\ X/Q \sum_i \dot{Q}_i DFS_i$$

$$\left(\frac{pCi}{\mu Ci}\right)\left(\frac{sec}{m^3}\right)\left(\frac{\mu Ci}{sec}\right)\left(\frac{mrem - m^3}{pCi - yr}\right)$$

Substituting atmospheric dispersion factors for an elevated gaseous effluent release point, Equation 7-8 takes the following form:

$$\dot{D}_{skin(e)} = [1.11 * 1E+06 * 8.5E-07 * \sum_i (\dot{Q}_i * DF_i^{\gamma})] + [1E+06 * 8.2E-07 * \sum_i (\dot{Q}_i * DFS_i)]$$

which yields:

$$\dot{D}_{skin(e)} = [0.94 \sum_i (\dot{Q}_i * DF_i^{\gamma})] + [0.82 \sum_i (\dot{Q}_i * DFS_i)]$$

$$\left(\frac{mrem}{yr}\right) = \left(\frac{pCi-sec-mrem}{\mu Ci-m^3 - mrad}\right)\Sigma\left(\frac{\mu Ci}{sec} * \frac{mrem-m^3}{pCi-yr}\right) + \frac{pCi-sec}{\mu Ci-m^3}\Sigma\left(\frac{\mu Ci}{sec} * \frac{mrem-m^3}{pCi-yr}\right) \tag{7-9a}$$

defining:

$$DF'_{i(e)} = 0.94\ DF_i^{\gamma} + 0.82\ DFS_i \tag{7-10a}$$

Then the off-site skin dose rate equation for an elevated gaseous effluent release point is:

$$\dot{D}_{skin(e)} = \sum_i \dot{Q}_i * DF'_{i(e)} \tag{3-4a}$$

$$\left(\frac{mrem}{yr}\right) = \Sigma\left(\frac{\mu Ci}{sec} * \frac{mrem-sec}{\mu Ci-yr}\right)$$

For an off-site receptor and a ground level gaseous effluent release point, Equation 7-8 becomes:

$$\dot{D}_{skin(g)} = [1.11 * 1E+06 * 3.4E-06 * \Sigma(\dot{Q}_i * DF_i^{\gamma})] + [1E+06 * 1.0E-05 * \sum_i (\dot{Q}_i * DFS_i)]$$

which yields:

$$\dot{D}_{skin(g)} = [3.8 \sum_i (\dot{Q}_i * DF_i^{\gamma})] + [10 \sum_i (\dot{Q}_{ii} * DFS_i)] \tag{7-9b}$$
$$= \sum_i \dot{Q}_i [3.8\, DF_i^{\gamma} + 10\, DFS_i]$$

defining:

$$DF'_{i(g)} = 3.8\, DF_i^{\gamma} + 10\, DFS_i \tag{7-10b}$$

Then the off-site skin dose rate equation for ground level gaseous effluent release points is:

$$\dot{D}_{skin(g)} = \sum_i \dot{Q}_i * DF'_{i(g)} \tag{3-4b}$$

The selection of critical receptor, outlined in Part B, Section 7.3, is inherent in the derived Method I, as it is based on the determined maximum expected off-site atmospheric dispersion factors. All noble gases in Table B.1-10 must be considered.

7.2.3 Critical Organ Dose Rate from Iodines, Tritium and Particulates With Half-Lives Greater Than Eight Days

This section serves: (1) to document the development of the Method I equation, (2) to provide background information to Method I users, and (3) to identify the general equation's parameters and approached to Method II type dose rate assessments. The methods to calculate skin dose rate parallel the total body dose rate methods in Part B, Section 7.2.1.

Method I may be used to show that the Part A Controls which limit organ dose rate from iodines, tritium and radionuclides in particulate form with half lives greater than 8 days released to the atmosphere (Part A Control C.7.1.1) has been met for the peak above-mentioned release rates. The annual organ dose limit is 1500 mrem (from NBS Handbook 69, Reference D, pages 5 and 6). It is evaluated by looking at the critical organ dose commitment to the most limiting off-site receptor assuming long-term site average meteorology.

The equation for $\dot{D}_{co}$ is derived from a form of Equation 3-8 in Part B, Section 3.9 by applying the conversion factor, 3.154E+07 (sec/yr) and converting Q to $\dot{Q}$ µCi/sec:

$$\dot{D}_{co} = 3.15E+07 * \sum_i (\dot{Q}_i * DFG_{ico}) \tag{7-12}$$

$$\left(\frac{mrem}{yr}\right) = \left(\frac{sec}{yr}\right) \Sigma \left(\frac{\mu Ci}{sec}\right) * \left(\frac{mrem}{\mu Ci}\right)$$

Equation 7-12 is rewritten in the form:

$$\dot{D}_{co} = \sum_i (\dot{Q}_i * DFG'_{ico})$$

$$\left(\frac{mrem}{yr}\right) = \sum\left(\frac{\mu Ci}{sec}\right) * \left(\frac{mrem\text{-}sec}{\mu Ci\text{-}yr}\right) \qquad (7\text{-}12a)$$

where:

$$DFG'_{ico} = 3.154E{+}07 * DFG_{ico} \qquad (7\text{-}13)$$

$$\left(\frac{mrem\text{-}sec}{\mu Ci\text{-}yr}\right) = \left(\frac{sec}{yr}\right) * \left(\frac{mrem}{\mu Ci}\right)$$

The dose conversion factor, DFG_{ico}, has been developed for both elevated gaseous effluent release points and ground level gaseous effluent release points ($DFG_{ico(e)}$ and $DFG_{ico(g)}$), respectively. These dose factors are used to determine accumulated doses over extended periods and have been calculated with the Shielding Factor (SF) for ground plane exposure set equal to 0.7, as referenced in Regulatory Guide 1.109. In the case of the dose rate conversion factors ($DFG'_{ico(e)}$ and $DFG'_{ico(g)}$), the dose conversion factors from which they were derived were calculated with the Shielding Factor (SF) for ground plane exposure set equal to 1.0.

For an off-site receptor and elevated effluent release point, the critical organ dose rate equation is:

$$\dot{D}_{co(e)} = \sum_i (\dot{Q}_i * DFG'_{ico(e)}) \qquad (3\text{-}5a)$$

$$\left(\frac{mrem}{yr}\right) = \sum\left(\frac{\mu Ci}{sec} * \frac{mrem\text{-}sec}{\mu Ci\text{-}yr}\right)$$

For an off-site receptor and ground level effluent release point, the critical organ dose rate equation is:

$$\dot{D}_{co(g)} = \sum_i (\dot{Q}_i * DFG'_{ico(g)}) \qquad (3\text{-}5b)$$

$$\left(\frac{mrem}{yr}\right) = \sum\left(\frac{\mu Ci}{sec} * \frac{mrem\text{-}sec}{\mu Ci\text{-}yr}\right)$$

The selection of critical receptor, outlined in Part B, Section 7.3 is inherent in Method I, as are the expected atmospheric dispersion factors.

In accordance with the Basis Statement 3/4.11.2.1 in NUREG-0472, and the base's section for the organ dose rate limit given for Part A Control C.7.1.1 a Method II dose rate calculation, for compliance purposes, can be based on restricting the inhalation pathway to a child's thyroid to less than or equal to 1,500 mrem/yr. Concurrent meteorology with time of release may also be used to assess compliance for a Method II calculation.

7.2.4 Gamma Dose to Air from Noble Gases

This section serves: (1) to document the development and conservative nature of Method I equations to provide background information to Method I users, and (2) to identify the general equations, parameters and approaches to Method II-type dose assessments.

Method I may be used to show that the Part A Control C.7.2.1 which limits off-site gamma air dose from gaseous effluents has been met for releases over appropriate periods. This Part A Control is based on the objective in 10CFR50, Appendix I, Subsection B.1, which limits the estimated gamma air dose in off-site unrestricted areas.

NUREG/CR-2919 presents a methodology for determining atmospheric dispersion factors (CHI/Q values) for intermittent releases at user specified receptor locations (intermittent releases being defined as releases with durations between 1 and 8,760 hours). The CHI/Q values for intermittent releases are determined by linearly interpolating (on a log-log basis) between an hourly 15-percentile CHI/Q value and an annual average CHI/Q value as a function of release duration. This methodology has been adopted to produce a set of time-dependent atmospheric dispersion factors for Method I calculations.

For any noble gas release, in any period, the increment in dose is taken from Equations B-4 and B-5 of Regulatory Guide 1.109 with the added assumption that $D^{\gamma}_{finite} = D^{\gamma}\,[X/Q]^{\gamma}/[X/Q]$:

$$\Delta D^{\gamma}_{air(e)} = 3.17E+4\,[X/Q]^{\gamma} \sum_i Q_i DF^{\gamma}_i$$

$$(\text{mrad}) = \left(\frac{\text{pCi - yr}}{\text{Ci} - \text{sec}}\right)\left(\frac{\text{sec}}{\text{m}^3}\right)(\text{Ci})\left(\frac{\text{mrad - m}^3}{\text{pCi - yr}}\right) \qquad (7\text{-}14)$$

where:

3.17E+04	=	Number of pCi per Ci divided by the number of seconds per year.
$[X/Q]^{\gamma}$	=	Annual average gamma atmospheric dispersion factor for the receptor location of interest.
Q_i	=	Number of curies of noble gas "i" released.
DF^{γ}_i	=	Gamma air dose factor for a uniform semi-infinite cloud of radionuclide "i".

Incorporating a unitless release duration adjustment term t^{-a} (where "a" is a constant and "t" is the total release duration in hours), and the conversion factor for Ci to μCi (to accommodate the use of a release rate Q in μCi), and substituting the 1-hour gamma atmospheric dispersion factor in place of the annual average gamma atmospheric dispersion factor in Equation 7-14 leads to:

$$D^{\gamma}_{air} = 3.17E-02 * [X/Q]^{\gamma}_{1hr} * t^{-a} * \sum_i \left(Q_i * DF_i^{\gamma}\right)$$

$$(\text{mrad}) = \left(\frac{\text{pCi-yr}}{\mu\text{Ci}-\text{sec}}\right) * \left(\frac{\text{sec}}{\text{m}^3}\right) * \sum \left(\mu\text{Ci} * \frac{\text{mrad-m}^3}{\text{pCi-yr}}\right) \quad (3\text{-}6)$$

For an elevated release, the equation used for an off-site receptor is:

$$D^{\gamma}_{air(e)} = 3.17E-02 * [1.0E-05] * t^{-0.275} * \sum_i \left(Q_i * DF_i^{\gamma}\right)$$

which leads to:

$$D^{\gamma}_{air(e)} = 3.2E-07 * t^{-0.275} * \sum_i \left(Q_i * DF_i^{\gamma}\right) \quad (3\text{-}6a)$$

$$(\text{mrad}) = \left(\frac{\text{pCi-yr}}{\mu\text{Ci}-\text{m}^3}\right) * \sum \left(\mu\text{Ci} * \frac{\text{mrad-m}^3}{\text{pCi-yr}}\right)$$

For a ground-level release, the equation used for an off-site receptor is:

$$D^{\gamma}_{air(g)} = 3.17E-02 * [4.9E-05] * t^{-0.293} * \sum_i \left(Q_i * DF_i^{\gamma}\right)$$

which leads to:

$$D^{\gamma}_{air(g)} = 1.6E-06 * t^{-0.293} * \sum_i \left(Q_i * DF_i^{\gamma}\right) \quad (3\text{-}6b)$$

$$(\text{mrad}) = \left(\frac{\text{pCi-yr}}{\mu\text{Ci}-\text{m}^3}\right) * \sum \left(\mu\text{Ci} * \frac{\text{mrad-m}^3}{\text{pCi-yr}}\right)$$

The major difference between Method I and Method II is that Method II would use actual or concurrent meteorology with a specific noble gas release spectrum to determine $[X/Q]^{\gamma}$ rather than use the site's long-term average meteorological dispersion values.

7.2.5 Beta Dose to Air from Noble Gases

This section serves: (1) to document the development and conservative nature of Method I equations to provide background information to Method I users, and (2) to identify the general equations, parameters and approaches to Method II-type dose assessments.

Method I may be used to show that Part A Control C.7.2.1, which limits off-site beta air dose from gaseous effluents, has been met for releases over appropriate periods. This Part A Control is based on the objective in 10CFR50, Appendix I, Subsection B.1, which limits the estimated beta air dose in off-site unrestricted area locations.

For any noble gas release, in any period, the increment in dose is taken from Equations B-4 and B-5 of Regulatory Guide 1.109:

$$\Delta D^{\beta}_{air} = 3.17E-02 * X/Q \sum_i \left(Q_i * DF_i^{\beta}\right) \quad (7\text{-}15)$$

$$(\text{mrad}) = \left(\frac{\text{pCi-yr}}{\mu\text{Ci}-\text{sec}}\right) * \left(\frac{\text{sec}}{\text{m}^3}\right) (\mu\text{Ci}) \left(\frac{\text{mrad-m}^3}{\text{pCi-yr}}\right)$$

where:

DF_i^{β} = Beta air dose factors for a uniform semi-infinite cloud of radionuclide "i".

Incorporating the term t^{-a} into Equation 7-15 leads to:

$$D_{air}^{\beta} = 3.17E-02 * X/Q_{1hr} * t^{-a} * \sum_i \left(Q_i * DF_i^{\beta}\right) \quad (3\text{-}7)$$

$$(\text{mrad}) = \left(\frac{\text{pCi - yr}}{\mu\text{Ci - sec}}\right) * \left(\frac{\text{sec}}{\text{m}^3}\right) * (\ ) * \sum \left(\mu\text{Ci} * \frac{\text{mrad - m}^3}{\text{pCi - yr}}\right)$$

Where X/Q_{1hr} = average 1-hour undepleted atmospheric dispersion factor.

For an elevated release, the equation used for an off-site receptor is:

$$D_{air(e)}^{\beta} = 3.17E-02 * 1.3E-05 * t^{-0.3} * \sum_i \left(Q_i * DF_i^{\beta}\right)$$

$$(\text{mrad}) = \left(\frac{\text{pCi - yr}}{\mu\text{Ci - sec}}\right) * \left(\frac{\text{sec}}{\text{m}^3}\right) * (\ ) * \sum \left(\mu\text{Ci} * \frac{\text{mrad - m}^3}{\text{pCi - yr}}\right)$$

which leads to:

$$D_{air(e)}^{\beta} = 4.1E-07 * t^{-0.3} * \sum_i \left(Q_i * DF_i^{\beta}\right) \quad (3\text{-}7a)$$

$$(\text{mrad}) = \left(\frac{\text{pCi - yr}}{\mu\text{Ci - m}^3}\right) * (\ ) * \sum \left(\mu\text{Ci} * \frac{\text{mrad - m}^3}{\text{pCi - yr}}\right)$$

For a ground-level release, the equation used for an off-site receptor is:

$$D_{air(g)}^{\beta} = 3.17E-02 * 1.9E-04 * t^{-0.319} * \sum_i \left(Q_i * DF_i^{\beta}\right)$$

$$(\text{mrad}) = \left(\frac{\text{pCi - yr}}{\mu\text{Ci - sec}}\right) * \left(\frac{\text{sec}}{\text{m}^3}\right) * (\ ) * \sum \left(\mu\text{Ci} * \frac{\text{mrad - m}^3}{\text{pCi - yr}}\right)$$

which leads to:

$$D^{\beta}_{air(g)} = 6.0E-06 * t^{-0.319} * \sum_i \left(Q_i * DF_i^{\beta}\right) \quad (3\text{-}7b)$$

$$(\text{mrad}) = \left(\frac{\text{pCi - yr}}{\mu\text{Ci} - \text{m}^3}\right) * (\ ) * \Sigma \left(\mu\text{Ci} * \frac{\text{mrad - m}^3}{\text{pCi - yr}}\right)$$

7.2.6 Dose to Critical Organ from Iodines, Tritium and Particulates with Half-Lives Greater Than Eight Days

This section serves: (1) to document the development and conservative nature of Method I equations to provide background information to Method I users, and (2) to identify the general equations, parameters and approaches to Method II-type dose assessments.

Method I may be used to show that the Part A Controls which limit off-site organ dose from gases (C.7.3.1 and C.8.1.1) have been met for releases over the appropriate periods. Part A Control C.7.3.1 is based on the ALARA objectives in 10CFR50, Appendix I, Subsection II C. Part A Control C.8.1.1 is based on Environmental Standards for Uranium Fuel Cycle in 40CFR190, which applies to direct radiation as well as liquid and gaseous effluents. These methods apply only to iodine, tritium, and particulates in gaseous effluent contribution.

Method I was developed such that "the actual exposure of an individual ... is unlikely to be substantially underestimated" (10CFR50, Appendix I). The use below of a single "critical receptor" provides part of the conservative margin to the calculation of critical organ dose in Method I. Method II allows that actual individuals, associated with identifiable exposure pathways, be taken into account for any given release. In fact, Method I was based on a Method II analysis of a critical receptor assuming all pathways present. That analysis was called the "base case"; it was then reduced to form Method I. The base case, the method of reduction, and the assumptions and data used are presented below.

The steps performed in the Method I derivation follow. First, the dose impact to the critical receptor [in the form of dose factors DFG_{ico} (mrem/μCi)] for a unit activity release of each iodine, tritium, and particulate radionuclide with half lives greater than eight days to gaseous effluents was derived. Six exposure pathways (ground plane, inhalation, stored vegetables, leafy vegetables, milk, and meat ingestion) were assumed to exist at the site boundary (not over water or marsh areas) which exhibited the highest long-term X/Q. Doses were then calculated to six organs (bone, liver, kidney, lung, GI-LLI, and thyroid), as well as for the whole body and skin for four age groups (adult, teenager, child, and infant) due to the seven combined exposure pathways. For each radionuclide, the highest dose per unit activity release for any organ (or whole body) and age group was then selected to become the Method I site-specific dose factors. The base case, or Method I analysis, uses the general equations methods, data, and assumptions in Regulatory Guide 1.109 (Equation C-2 for doses resulting from direct exposure to contaminated ground plane; Equation C-4 for doses associated with inhalation of all radionuclides to different organs of individuals of different age groups; and Equation C-13 for doses to organs of individuals in different age groups resulting from ingestion of radionuclides in produce, milk, meat, and leafy vegetables in Reference A). Tables B.7-2 and B.7-3 outline human consumption and environmental parameters used in the analysis. It is conservatively assumed that the critical receptor lives at the "maximum off-site atmospheric dispersion factor location" as defined in Section 7.3.

The resulting site-specific dose factors are for the maximum organ which combine the limiting age group with the highest dose factor for any organ with each nuclide. These critical organ, critical age dose factors are given in Table B.1-12. Appendix A provides an example of the development of Method I gaseous dose conversion factor for site-specific conditions at Seabrook.

For any iodine, tritium, and particulate gas release, during any period, the increment in dose from radionuclide "i" is:

$$\Delta D_{ico} = Q_i DFG_{ico} \tag{7-16}$$

where DFG_{ico} is the critical dose factor for radionuclide "i" and Q_i is the activity of radionuclide "i" released in microcuries.

Applying this information, it follows that the general form for the critical organ dose equation is:

$$D_{co} = (X/Q)^{depl}_{1\,hr} / (X/Q)^{depl}_{an} * t^{-a} * \sum_i (Q_i * DFG_{ico}) \tag{3-8}$$

$$\text{mrem} = \left(\frac{\text{sec}}{\text{m}^3}\right) / \left(\frac{\text{sec}}{\text{m}^3}\right) * (\ ) * \Sigma \left(\mu\text{Ci} * \frac{\text{mrem}}{\mu\text{Ci}}\right)$$

Substituting specific values associated with the maximum off-site receptor location and elevated release condition yields:

$$D_{co(e)} = (1.12\text{E-}05)/(7.55\text{E-}07) * t^{-0.297} * \sum_i (Q_i * DFG_{ico(e)})$$

which reduces to:

$$D_{co(e)} = 14.8 * t^{-0.297} * \sum_i (Q_i * DFG_{ico(e)}) \tag{3-8a}$$

For the maximum off-site receptor location and ground-level release conditions, the equation is:

$$D_{co(g)} = (1.71E-04)/(9.64E-06) * t^{-0.316} * \sum_i (Q_i * DFG_{ico(g)})$$

which reduces to:

$$D_{co(g)} = 17.7 * t^{-0.316} * \sum_i (Q_i * DFG_{ico(g)}) \quad (3\text{-}8b)$$

7.2.7 Special Receptor Gaseous Release Dose Calculations

Part A Section 10.2 requires that the doses to individuals involved in recreational activities within the site boundary are to be determined and reported in the Annual Radioactive Effluent Release Report.

The gaseous dose calculations for the special receptors parallel the bases of the gaseous dose rates and doses in Part B, Sections 7.2.1 through 7.2.5. Only the differences are presented here. The special receptor XQs are given in Table B.7-5.

7.2.7.1 Total Body Dose Rate from Noble Gases

Method I was derived from Regulatory Guide 1.109 as follows:

$$\dot{D}_{tb} = 1E+06\,[X/Q]^{\gamma} \sum_i \dot{Q}_i\, DFB_i \quad (7\text{-}3)$$

General Equation (7-3) is then multiplied by an Occupancy Factor (OF) to account for the time an individual will be at the on-site receptor locations during the year. There are two special receptor locations on-site. The "Rocks" is a boat landing area which provides access to Browns River and Hampton Harbor. The Seabrook Station UFSAR, Chapter 2.1, indicates little boating activity in either Browns River or nearby Hunts Island Creek has been observed upon which to determine maximum or conservative usage factors for this on-site shoreline location. As a result, a default value for shoreline activity as provided in Regulatory Guide 1.109, Table E-5, for maximum individuals was utilized for determining the "Rocks" occupancy factor. The 67 hours/year corresponds to the usage factor for a teenager involved in shoreline recreation. This is the highest usage factor of all four age groups listed in Regulatory Guide 1.109, and has been used in the ODCM to reflect the maximum usage level irrespective of age.

Regulatory Guide 1.109 does not provide a maximum individual usage factor for activities similar to those which would be associated with the Seabrook Station Science & Nature Center. Therefore, the usage factor used in the ODCM for the Science & Nature Center reflects the observed usage patterns of visitors to the facility. Individuals in the public who walk in to look at the exhibits on display and pick up available information stay approximately 1.5 hours each. Tour groups who schedule visits to the facility stay approximately 2.5 hours. For conservatism, it was assumed that an individual in a tour group would return five times in a year, and stay 2.5 hours on each visit. These assumptions, when multiplied together, provide the occupancy factor of 12.5 hours/year used in the ODCM for public activities associated with the Science & Nature Center.

For the Science & Nature Center, and the "Rocks", the occupancy factors (OFs) are:

Science & Nature Center - $\frac{12.5\,\text{hrs/yr}^{(1)}}{8760\,\text{hrs/yr}} = 0.0014$

The "Rocks" - $\frac{67\,\text{hrs/yr}^{(1)}}{8760\,\text{hrs/yr}} = 0.0076$

substituting in the annual average gamma X/Qs:

$[X/Q]^{\gamma}$ = 1.1E-06 sec/m^3 (Science & Nature Center) for primary vent stack releases.

= 5.3E-06 sec/m^3 (Science & Nature Center) for ground level releases.

= 5.0E-06 sec/m^3 (The "Rocks") for primary vent stack releases.

= 2.6E-05 sec/m^3 (The "Rocks") for ground level releases.

and multiplying by:

OF = 0.0014 (Science & Nature Center)

= 0.0076 (The "Rocks")

gives:

$$\dot{D}_{tbE(e)} = 0.0015 * \sum_i (\dot{Q}_i * DFB_i) \quad \text{(mrem/yr)} \quad (3\text{-}3c)$$

$$\dot{D}_{tbE(g)} = 0.0074 * \sum_i (\dot{Q}_i * DFB_i) \quad \text{(mrem/yr)} \quad (3\text{-}3d)$$

$$\dot{D}_{tbR(e)} = 0.038 * \sum_i (\dot{Q}_i * DFB_i) \quad \text{(mrem/yr)} \quad (3\text{-}3e)$$

$$\dot{D}_{tbR(g)} = 0.2 * \sum_i (\dot{Q}_i * DFB_i) \quad \text{(mrem/yr)} \quad (3\text{-}3f)$$

where:

$\dot{D}_{tbE(e)}, \dot{D}_{tbE(g)}, \dot{D}_{tbR(e)}$, and $\dot{D}_{tbR(g)}$ = total body dose rates to an individual at the Science & Nature Center and the "Rocks" (recreational site), respectively, due to noble gases in an elevated (e) and ground level (g) release,

(1) Taken from Seabrook Station Technical Specifications (Figure 5.1-1).

$\dot{Q}$ and DFB_i are as defined previously.

7.2.7.2 Skin Dose Rate from Noble Gases

Method I was derived from Equation (7-8):

$$\dot{D}_{skin} = 1.11\,1E+06\ [X/Q]^{\gamma} \sum_i \dot{Q}_i\, DF_i^{\gamma} + 1E+06\ X/Q \sum_i \dot{Q}_i DFS_i \qquad (7\text{-}8)$$

substituting in the annual average gamma X/Qs:

$[X/Q]^{\gamma}$ = 1.1E-06 sec/m^3 (Science & Nature Center) for primary vent stack releases.

= 5.3E-06 sec/m^3 (Science & Nature Center) for ground level release points.

= 5.0E-06 sec/m^3 (The "Rocks") for primary vent stack releases.

= 2.6E-05 sec/m^3 (The "Rocks") for ground level release points.

and the annual average undepleted X/Qs:

X/Q = 1.6E-06 sec/m^3 (Science & Nature Center) for primary vent stack releases.

= 2.3E-05 sec/m^3 (Science & Nature Center) for ground level release points.

= 1.7E-05 sec/m^3 (The "Rocks") for primary vent stack releases.

= 1.6E-04 sec/m^3 (The "Rocks") for ground level release points.

and multiplying by:

OF = 0.0014 (Science & Nature Center)

= 0.0076 (The "Rocks")

gives:

$$\dot{D}_{skinE(e)} = 0.0014 \sum_i \dot{Q}_i\,[1.22\ DF_i^{\gamma} + 1.60\ DFS_i] \text{ for an elevated release point.}$$

$$\dot{D}_{skinE(g)} = 0.0014 \sum_i \dot{Q}_i\,[5.88\ DF_i^{\gamma} + 23\ DFS_i] \text{ for a ground level release point.}$$

$$\dot{D}_{skinR(e)} = 0.0076 \sum_i \dot{Q}_i\,[5.55\ DF_i^{\gamma} + 17.0\ DFS_i] \text{ for an elevated release point.}$$

$$\dot{D}_{skinR(g)} = 0.0076 \sum_i \dot{Q}_i\,[28.9\ DF_i^{\gamma} + 160\ DFS_i] \text{ for a ground level release point.}$$

and the equations can be written:

$$\dot{D}_{skinE(e)} = 0.0014 * \sum_i (\dot{Q}_i * DF'_{iE(e)}) \quad (3\text{-}4c)$$

$$\dot{D}_{skinE(g)} = 0.0014 * \sum_i (\dot{Q}_i * DF'_{iE(g)}) \quad (3\text{-}4d)$$

$$\dot{D}_{skinR(e)} = 0.0076 * \sum_i (\dot{Q}_i * DF'_{iR(e)}) \quad (3\text{-}4e)$$

$$\dot{D}_{skinR(g)} = 0.0076 * \sum_i (\dot{Q}_i * DF'_{iR(g)}) \quad (3\text{-}4f)$$

where:

$\dot{D}_{skinE(e)}, \dot{D}_{skinE(g)}, \dot{D}_{skinR(e)}$, and $\dot{D}_{skinR(g)}$ = the skin dose rate (mrem/yr) to an individual at the Science & Nature Center and the "Rocks", respectively, due to noble gases in an elevated (e) and ground level (g) release,

$\dot{Q}_i$ = defined previously, and

$DF'_{iE(e)}, DF'_{iE(g)}, DF'_{iR(e)}$, and $DF'_{iR(e)}$ = the combined skin dose factors for radionuclide "i" for the Science & Nature Center and the "Rocks", respectively, for elevated (e) and ground level (g) release points (see Table B.1-13).

7.2.7.3 Critical Organ Dose Rate from Iodines, Tritium and Particulates with Half-Lives Greater Than Eight Days

The equations for $\dot{D}_{co}$ are derived in the same manner as in Part B, Section 7.2.2, except that the occupancy factors are also included. Therefore:

$$\dot{D}_{CoE(e)} = 0.0014 * \sum_i (\dot{Q}_i * DFG'_{icoE(e)}) \text{ for an elevated release.} \quad (3\text{-}5c)$$

$$\dot{D}_{coE(g)} = 0.0014 * \sum_i (\dot{Q}_i * DFG'_{icoE(g)}) \text{ for a ground level release.} \quad (3\text{-}5d)$$

$$\dot{D}_{coR(e)} = 0.0076 * \sum_i (\dot{Q}_i * DFG'_{icoR(e)}) \text{ for an elevated release.} \quad (3\text{-}5e)$$

$$\dot{D}_{coR(g)} = 0.0076 * \sum_i (\dot{Q}_i * DFG'_{icoR(g)}) \text{ for a ground level release.} \quad (3\text{-}5f)$$

where:

$\dot{D}_{coE(e)}, \dot{D}_{coE(g)}, \dot{D}_{coR(e)}$, and $\dot{D}_{coR(g)}$ = the critical organ dose rates (mrem/yr) to an individual at the Science & Nature Center and the "Rocks", respectively, due to iodine, tritium, and particulates in elevated (e) and ground level (g) releases,

$\dot{Q}_i$ = as defined previously, and

$DFG'_{icoE(e)}, DFG'_{icoE(g)}, DFG'_{icoR(e)}$, and $DFG'_{icoR(g)}$ = the critical organ dose rate factors for radionuclide "i" for the Science & Nature Center and the "Rocks", respectively, for elevated (e) and ground level (g) release points (see Tables B.1-14 and B.1-15).

7.2.7.4 Gamma Dose to Air from Noble Gases

Method I was derived from Equation (3-6):

$$D^{\gamma}_{air} = 3.17E\text{-}02 * [X/Q]^{\gamma}_{1hr} * t^{-a} * \sum_i (\dot{Q}_i * DF^{\gamma}_i) \qquad (3\text{-}6)$$

where all terms of the equation are as defined previously.

Incorporating the specific OF and the atmospheric dispersion factor, the gamma air dose equation for the Science & Nature Center for elevated releases:

$$D^{\gamma}_{airE(e)} = 3.17E\text{-}02 * 1.1E\text{-}05\, t^{-0.252} * 0.0014 * \sum_i (Q_i * DF^{\gamma}_i)$$

which reduces to:

$$D^{\gamma}_{airE(e)} = 4.9E\text{-}10 * t^{-0.252} * \sum_i (Q_i * DF^{\gamma}_i) \qquad (3\text{-}6c)$$

$$(\text{mrad}) = \left(\frac{\text{pCi-yr}}{\mu\text{Ci-m}^3}\right) * (\ ) * \Sigma\left(\mu\text{Ci} * \frac{\text{mrad-m}^3}{\text{pCi-yr}}\right)$$

For ground-level releases, the gamma air dose equation for the Science & Nature Center becomes:

$$D^{\gamma}_{air(E(g)} = 3.17E\text{-}02 * 1.0E\text{-}04\, t^{-0.321} * 0.0014 * \sum_i (Q_i * DF^{\gamma}_i)$$

which reduces to:

$$D^{\gamma}_{airE(g)} = 4.4E\text{-}09 * t^{-0.321} * \sum_i (Q_i * DF^{\gamma}_i) \tag{3-6d}$$

$$(\text{mrad}) = \left(\frac{\text{pCi-yr}}{\mu\text{Ci-m}^3}\right) * (\ ) * \Sigma\left(\mu\text{Ci} * \frac{\text{mrad-m}^3}{\text{pCi-yr}}\right)$$

Incorporating the specific OF and atmospheric dispersion factors for the "Rocks" yields the gamma air dose equation for elevated releases:

$$D^{\gamma}_{airR(e)} = 3.17E\text{-}02 * 2.1E\text{-}05 * t^{-0.155} * 0.0076 * \sum_i (Q_i * DF^{\gamma}_i)$$

which reduces to:

$$D^{\gamma}_{airR(e)} = 5.1E\text{-}09 * t^{-0.155} * \sum_i (Q_i * DF^{\gamma}_i) \tag{3-6e}$$

$$(\text{mrad}) = \left(\frac{\text{pCi-yr}}{\mu\text{Ci-m}^3}\right) * (\ ) * \Sigma\left(\mu\text{Ci} * \frac{\text{mrad-m}^3}{\text{pCi-yr}}\right)$$

For ground-level releases, the gamma air dose equation for the "Rocks" becomes:

$$D^{\gamma}_{airR(g)} = 3.17E\text{-}02 * 1.7E\text{-}04\, t^{-0.204} * 0.0076 * \sum_i (Q_i * DF^{\gamma}_i)$$

which reduces to:

$$D^{\gamma}_{airR(g)} = 4.1E\text{-}08 * t^{-0.204} * \sum_i (Q_i * DF^{\gamma}_i) \tag{3-6f}$$

$$(\text{mrad}) = \left(\frac{\text{pCi-yr}}{\mu\text{Ci-m}^3}\right) * (\ ) * \Sigma\left(\mu\text{Ci} * \frac{\text{mrad-m}^3}{\text{pCi-yr}}\right)$$

7.2.7.5 <u>Beta Dose to Air from Noble Gases</u>

Method I was derived as described in Part B, Section 7.2.5. The general form of the dose equation is:

$$D^{\beta}_{air} = 3.17E\text{-}02 * X/Q^{undepl}_{1\text{-}hr} * t^{-a} * \sum_i (Q_i * DF^{\beta}_i) \tag{3-7}$$

where all terms in the equation are as defined in Part B, Section 7.2.5.

Incorporating the specific OF and atmospheric dispersion factor for elevated releases into Equation 3-7 yields the following beta dose equation for the Science & Nature Center:

$$D^{\beta}_{airE(e)} = 3.17E\text{-}02 * 4.0E\text{-}05 * t^{-0.35} * 0.0014 * \sum_i (Q_i * DF_i^{\beta})$$

which reduces to:

$$D^{\beta}_{airE(e)} = 1.8E\text{-}09 * t^{-0.35} * \sum_i (Q_i * DF_i^{\beta}) \qquad (3\text{-}7c)$$

$$(\text{mrad}) = \left(\frac{\text{pCi-yr}}{\mu\text{Ci-m}^3}\right) * (\ ) * \Sigma\left(\mu\text{Ci} * \frac{\text{mrad-m}^3}{\text{pCi-yr}}\right)$$

For ground-level releases, the beta air dose equation for the Science & Nature Center becomes:

$$D^{\beta}_{airE(g)} = 3.17E\text{-}02 * 5.5E\text{-}04 * t^{-0.347} * 0.0014 * \sum_i (Q_i * DF_i^{\beta})$$

which reduces to:

$$D^{\beta}_{airE(g)} = 2.4E\text{-}08 * t^{-0.347} * \sum_i (Q_i * DF_i^{\beta}) \qquad (3\text{-}7d)$$

$$(\text{mrad}) = \left(\frac{\text{pCi-yr}}{\mu\text{Ci-m}^3}\right) * (\ ) * \Sigma\left(\mu\text{Ci} * \frac{\text{mrad-m}^3}{\text{pCi-yr}}\right)$$

Incorporating the specific OF and atmospheric dispersion factors for the "Rocks" yields the beta air dose equation for elevated releases:

$$D^{\beta}_{airR(e)} = 3.17E\text{-}02 * 1.6E\text{-}04 * t^{-0.249} * 0.0076 * \sum_i (Q_i * DF_i^{\beta})$$

which reduces to:

$$D^{\beta}_{airR(e)} = 3.9E\text{-}08 * t^{-0.249} * \sum_i (Q_i * DF_i^{\beta}) \qquad (3\text{-}7e)$$

$$(\text{mrad}) = \left(\frac{\text{pCi-yr}}{\mu\text{Ci-m}^3}\right) * (\ ) * \Sigma\left(\mu\text{Ci} * \frac{\text{mrad-m}^3}{\text{pCi-yr}}\right)$$

For ground-level releases, the beta air dose equation for the "Rocks" becomes:

$$D^{\beta}_{airR(g)} = 3.17E\text{-}02 * 1.9E\text{-}03 * t^{-0.267} * 0.0076 * \sum_i (Q_i * DF_i^{\beta})$$

which reduces to:

$$D^{\beta}_{airR(g)} = 4.6E\text{-}07 * t^{-0.267} * \sum_i (Q_i * DF_i^{\beta}) \qquad (3\text{-}7f)$$

$$(mrad) = \left(\frac{pCi\text{-}yr}{\mu Ci\text{-}m^3}\right) * (\ ) * \Sigma\left(\mu Ci * \frac{mrad\text{-}m^3}{pCi\text{-}yr}\right)$$

7.2.7.6 <u>Critical Organ Dose from Iodines, Tritium and Particulates With Half-Lives Greater Than Eight Days</u>

Method I was derived as described in Part B, Section 7.2.3. The Critical Organ Dose equations for receptors at the Science & Nature Center and the "Rocks" were derived from Equation 3-8. The following general equation incorporates (i) a ratio of the average 1-hour depleted atmospheric dispersion factor to the average annual depleted atmospheric dispersion factor, (ii) the unitless t^{-a} term, and (iii) the OF:

$$D_{co} = (X/Q)^{depl}_{1\text{-}hr} / (X/Q)^{depl}_{an} * t^{-a} * OF * \sum_i (Q_i * DFG_{ico})$$

$$(mrem) = \left(\frac{sec}{m^3}\right) / \left(\frac{sec}{m^3}\right) * (\ ) * (\ ) * \Sigma\left(\mu Ci * \frac{mrem}{\mu Ci}\right)$$

Applying the Science & Nature Center-specific factors for elevated release conditions produces the equation:

$$D_{coE(e)} = (3.72E\text{-}05)/(1.56E\text{-}06) * t^{-0.349} * 0.0014 * \sum_i (Q_i * DFG_{ico\,E(e)})$$

which reduces to:

$$D_{coE(e)} = 3.3E\text{-}02 * t^{-0.349} * \sum_i (Q_i * DFG_{ico\,E(e)}) \qquad (3\text{-}8c)$$

$$(mrem) = (\ ) * (\ ) * \Sigma\left(\mu Ci * \frac{mrem}{\mu Ci}\right)$$

For a ground-level release, the equation for a receptor at the Science & Nature Center is:

$$D_{coE(g)} = (5.21E\text{-}04)/(2.23E\text{-}05) * t^{-0.347} * 0.0014 * \sum_i (Q_i * DFG_{ico\,E(g)})$$

which reduces to:

$$D_{coE(g)} = 3.3E\text{-}02 * t^{-0.347} * \sum_i (Q_i * DFG_{ico\,E(g)}) \qquad (3\text{-}8d)$$

$$(mrem) = (\ ) * (\ ) * \Sigma\left(\mu Ci * \frac{mrem}{\mu Ci}\right)$$

The specific Critical Organ Dose equation for a receptor at the "Rocks" under elevated release conditions is:

$$D_{coR(e)} = (1.54E-04)/(1.61E-05) * t^{-0.248} * 0.0076 * \sum_i (Q_i * DFG_{icoR(e)})$$

which reduces to:

$$D_{coR(e)} = 7.3E-02 * t^{-0.248} * \sum_i (Q_i * DFG_{icoR(e)}) \quad (3\text{-}8e)$$

$$(\text{mrem}) = (\ ) * (\ ) * \Sigma \left(\mu Ci * \frac{\text{mrem}}{\mu Ci} \right)$$

For a ground-level release, the equation for a receptor at the "Rocks" is:

$$D_{coR(g)} = (1.80E-03)/(1.59E-04) * t^{-0.267} * 0.0076 * \sum_i (Q_i * DFG_{icoR(g)})$$

which reduces to:

$$D_{coR(g)} = 8.6E-02 * t^{-0.267} * \sum_i (Q_i * DFG_{icoR(g)}) \quad (3\text{-}8f)$$

$$(\text{mrem}) = (\ ) * (\ ) * \Sigma \left(\mu Ci * \frac{\text{mrem}}{\mu Ci} \right)$$

The special receptor equations can be applied under the following conditions (otherwise, justify Method I or consider Method II):

1. Normal operations (nonemergency event).

2. Applicable radionuclide releases via the station vents to the atmosphere.

If Method I cannot be applied, or if the Method I dose exceeds this limit, or if a more refined calculation is required, then Method II may be applied.

Table B.7-2

Environmental Parameters for Gaseous Effluents at Seabrook Station

(Derived from Reference A)*

Variable			Vegetables		Cow Milk		Goat Milk		Meat	
			Stored	Leafy	Pasture	Stored	Pasture	Stored	Pasture	Stored
YV	Agricultural Productivity	(Kg/M^2)	2.	2.	0.70	2.	0.70	2.	0.70	2.
P	Soil Surface Density	(Kg/M^2)	240.	240.	240.	240.	240.	240.	240.	240.
T	Transport Time to User	(HRS)			48.	48.	48.	48.	480.	480.
TB	Soil Exposure Time (1)	(HRS)	131400.	131400.	131400.	131400.	131400.	131400.	131400.	131400.
TE	Crop Exposure Time to Plume	(HRS)	1440.	1440.	720.	1440.	720.	1440.	720.	1440.
TH	Holdup After Harvest	(HRS)	1440.	24.	0.	2160.	0.	2160.	0.	2160.
QF	Animals Daily Feed	(Kg/DAY)			50.	50.	6.	6.	50.	50.
FP	Fraction of Year on Pasture(2)				0.50		0.50		0.50	
FS	Fraction Pasture when on Pasture(3)				1.		1.		1.	
FG	Fraction of Stored Veg. Grown in Garden		0.76							
FL	Fraction of Leafy Veg. Grown in Garden			1.0						
FI	Fraction Elemental Iodine = 0.5									
H	Absolute Humidity = 5.60(4)	(gm/m^3)								

* Regulatory Guide 1.109, Rev. 1

Table B.7-2

Environmental Parameters for Gaseous Effluents at Seabrook Station

Notes:

(1) For Method II dose/dose rate analyses of identified radioactivity releases of less than one year, the soil exposure time for that release may be set at 8760 hours (1 year) for all pathways.

(2) For Method II dose/dose rate analyses performed for releases occurring during the first or fourth calendar quarters, the fraction of time animals are assumed to be on pasture is zero (nongrowing season). For the second and third calendar quarters, the fraction of time on pasture (FP) will be set at 1.0. FP may also be adjusted for specific farm locations if this information is so identified and reported as part of the land use census.

(3) For Method II analyses, the fraction of pasture feed while on pasture may be set to less than 1.0 for specific farm locations if this information is so identified and reported as part of the land use census.

(4) For all Method II analyses, an absolute humidity value equal to 5.6 (gm/m^3) shall be used to reflect conditions in the Northeast (Reference: Health Physics Journal, Vol. 39 (August), 1980; Page 318-320, Pergammon Press).

Table B.7-3

Usage Factors for Various Gaseous Pathways at Seabrook Station

(from Reference A, Table E-5)*

Maximum Receptor:

Age Group	Vegetables (kg/yr)	Leafy Vegetables (kg/yr)	Milk (1/yr)	Meat (kg/yr)	Inhalation (m^3/yr)
Adult	520.00	64.00	310.00	110.00	8000.00
Teen	630.00	42.00	400.00	65.00	8000.00
Child	520.00	26.00	330.00	41.00	3700.00
Infant	0.00	0.00	330.00	0.00	1400.00

The "Rocks" and Science & Nature Center:

Age Group	Vegetables (kg/yr)	Leafy Vegetables (kg/yr)	Milk (1/yr)	Meat (kg/yr)	Inhalation (m^3/yr)
Adult	0.00	0.00	0.00	0.00	8000.00
Teen	0.00	0.00	0.00	0.00	8000.00
Child	0.00	0.00	0.00	0.00	3700.00
Infant	0.00	0.00	0.00	0.00	1400.00

* Regulatory Guide 1.109

7.3 Receptor Points and Average Atmospheric Dispersion Factors for Important Exposure Pathways

The gaseous effluent dose equations (Method I) have been simplified by assuming an individual whose behavior and living habits inevitably lead to a higher dose than anyone else. The following exposure pathways to gaseous effluents listed in Regulatory Guide 1.109 (Reference A) have been considered:

1. Direct exposure to contaminated air;
2. Direct exposure to contaminated ground;
3. Inhalation of air;
4. Ingestion of vegetables;
5. Ingestion of goat's milk; and
6. Ingestion of meat.

Part B, Section 7.3.1 details the selection of important off-site and on-site locations and receptors. Part B, Section 7.3.2 describes the atmospheric model used to convert meteorological data into atmospheric dispersion factors. Part B, Section 7.3.3 presents the maximum atmospheric dispersion factors calculated at each of the off-site receptor locations.

7.3.1 Receptor Locations

The most limiting site boundary location in which individuals are, or likely to be located as a place of residence was assumed to be the receptor for all the gaseous pathways considered. This provides a conservative estimate of the dose to an individual from existing and potential gaseous pathways for the Method I analysis.

This point is the west sector, 974 meters from the center of the reactor units for undepleted, depleted, and gamma X/Q calculations, and the northwest section, 914 meters for calculations with D/Q the dispersion parameter.

The site boundary in the NNE through SE sectors is located over tidal marsh (e.g., over water), and consequently are not used as locations for determining maximum off-site receptors (Reference NUREG 0133).

Two other locations (on-site) were analyzed for direct ground plane exposure and inhalation only. They are the "Rocks" (recreational site) and the Education Center shown on Figure 5.1-1 of the Technical Specifications.

7.3.2 Seabrook Station Atmospheric Dispersion Model

The time average atmospheric dispersion factors for use in both Method I and Method II are computed for routine releases using the AEOLUS-2 Computer Code (Reference B).

AEOLUS-2 produces the following average atmospheric dispersion factors for each location:

1. Undepleted X/Q dispersion factors for evaluating ground level concentrations of noble gases;

2. Depleted X/Q dispersion factors for evaluating ground level concentrations of iodines and particulates;

3. Gamma X/Q dispersion factors for evaluating gamma dose rates from a sector averaged finite noble gas cloud (multiple energy undepleted source); and

4. D/Q deposition factors for evaluating dry deposition of elemental radioiodines and other particulates.

Gamma dose rate is calculated throughout this ODCM using the finite cloud model presented in "Meteorology and Atomic Energy - 1968" (Reference E, Section 7-5.2.5). That model is implemented through the definition of an effective gamma atmospheric dispersion factor, [X/Q^{γ}] (Reference B, Section 6), and the replacement of X/Q in infinite cloud dose equations by the [X/Q^{γ}].

7.3.3 Average Atmospheric Dispersion Factors for Receptors

The calculation of Method I and Method II atmospheric diffusion factors (undepleted CHI/Q, depleted CHI/Q, D/Q, and gamma CHI/Q values) utilize a methodology generally consistent with US NRC Regulatory Guide 1.111 (Revision 1) criteria and the methodology for calculating routine release diffusion factors as represented by the XOQDOQ computer code (NUREG/CR-2919). The primary vent stack is treated as a "mixed-mode" release, as defined in Regulatory Guide 1.111. Effluents are considered to be part-time ground level/part-time elevated releases depending on the ratio of the primary vent stack effluent exit velocity relative to the speed of the prevailing wind. All other release points (e.g., Turbine Building and Chemistry lab hoods) are considered ground-level releases.

In addition, Regulatory Guide 1.111 discusses the concept that constant mean wind direction models like AEOLUS-2 do not describe spatial and temporal variations in airflow such as the recirculation of airflow which can occur during prolonged periods of atmospheric stagnation. For sites near large bodies of water like Seabrook, the onset and decay of sea breezes can also result in airflow reversals and curved trajectories. Consequently, Regulatory Guide 1.111 states that adjustments to constant mean wind direction model outputs may be necessary to account for such spatial and temporal variations in air flow trajectories. Recirculation correction factors have been applied to the diffusion factors. The recirculation correction factors used are compatible to the "default open terrain" recirculation correction factors used by the XOQDOQ computer code.

The relative deposition rates, D/Q values, were derived using the relative deposition rate curves presented in Regulatory Guide 1.111 (Revision 1). These curves provide estimates of deposition rates as a function of plume height, stability class, and plume travel distance.

Receptor Locations

For ground-level releases, the downwind location of "The Rocks" (244m NE/ENE) and the Science & Nature Center (406m SW) were taken as the distance from the nearest point on the Unit 1 Administrative Building/Turbine Building complex. For the site boundary, the minimum distances from the nearest point on the Administration Building/Turbine Building complex to the site boundary within a 45-degree sector centered on the compass direction of interest as measured from UFSAR Figure 2.1-4A were used (with the exception that the NE-NE-ENE-E-ESE-SE site boundary sectors were not evaluated because of their over-water locations).

For primary vent stack releases, the distances from the Unit 1 primary vent stack to "The Rocks" (244m NE) and the Science & Nature Center (488m SW) as measured from a recent site aerial photograph were used. For the site boundary, the minimum distances from the Unit 1 primary vent stack to the site boundary within a 45-degree sector centered on the compass direction of interest as measured from UFSAR Figure 2.1-4A were used (with the exception that the NNE-NE-ENE-E-ESE-SE site boundary sectors were not evaluated because of their over-water locations).

Meteorological Data Bases

For "The Rocks" and Science & Nature Center receptors, the diffusion factors represent six-year averages during the time period January 1980 through December 1983 and January 1987 through December 1988 (with the exception that, because of low data recovery, April 1979 and May 1979 were substituted for April 1980 and May 1980). For the site boundary receptors, both six-year average growing season (April through September) and year-round (January through December) diffusion factors were generated, with the higher of the two chosen to represent the site boundary.

The meteorological diffusion factor used in the development of the ODCM Method I dose models are summarized on Tables B.7-4 through B.7-6.

Table B.7-4

Seabrook Station Long-Term Average Dispersion Factors*

Primary Vent Stack

	Dose Rate to Individual			Dose to Air		Dose to Critical Organ
	Total Body	Skin	Critical Organ	Gamma	Beta	Thyroid
X/Q depleted $\left(\frac{sec}{m^3}\right)$	-	-	7.5E-07	-	-	7.5E-07
X/Q undepleted $\left(\frac{sec}{m^3}\right)$	-	8.2E-07	-	-	8.2E-07	-
D/Q $\left(\frac{1}{m^2}\right)$	-	-	1.5E-08**	-	-	1.5E-08
X/Q^{γ} $\left(\frac{sec}{m^3}\right)$	8.5E-07	8.5E-07	-	8.5E-07	-	-

* West site boundary, 974 meters from Containment Building

** Northwest site boundary, 914 meters from Containment Building

Table B.7-5

Seabrook Station Long-Term Average Dispersion Factors for Special (On-Site) Receptors

Primary Vent Stack

	Dose Rate to Individual			Dose to Air		Dose to Critical Organ
	Total Body	Skin	Critical Organ	Gamma	Beta	Thyroid
Education Center: (SW - 488 meters)						
X/Q depleted $\left(\frac{sec}{m^3}\right)$	-	-	1.5E-06	-	-	1.5E-06
X/Q undepleted $\left(\frac{sec}{m^3}\right)$	-	1.6E-06	-	-	1.6E-06	-
D/Q $\left(\frac{1}{m^2}\right)$	-	-	2.7E-08	-	-	-
X/Q^{γ} $\left(\frac{sec}{m^3}\right)$	1.1E-06	1.1E-06	-	1.1E-06	-	-
The "Rocks": (ENE - 244 meters)						
X/Q depleted $\left(\frac{sec}{m^3}\right)$	-	-	1.6E-05	-	-	1.6E-05
X/Q undepleted $\left(\frac{sec}{m^3}\right)$	-	1.7E-05	-	-	1.7E-05	-
D/Q $\left(\frac{1}{m^2}\right)$	-	-	1.1E-07	-	-	-
X/Q^{γ} $\left(\frac{sec}{m^3}\right)$	5.0E-06	5.0E-06	-	5.0E-06	-	-

Table B.7-6

Seabrook Station

Long-Term Atmospheric Diffusion and Deposition Factors

Ground-Level Release Pathway

Diffusion Factor	RECEPTOR[a]		
	The Rocks	Science & Nature Center	Off-Site
Undepleted CHI/Q, sec/m^3	1.6×10^{-4} (244m ENE)	2.3×10^{-5} (406m SW)	1.0×10^{-5} (823m W)
Depleted CHI/Q, sec/m^3	1.5×10^{-4} (244m ENE)	2.1×10^{-5} (406m SW)	9.6×10^{-6} (823m W)
D/Q, m^{-2}	5.1×10^{-7} (244m ENE)	1.0×10^{-7} (406m SW)	5.1×10^{-8} (823m W)
Gamma CHI/Q, sec/m^3	2.6×10^{-5} (244m ENE)	5.3×10^{-6} (406m SW)	3.4×10^{-6} (823m W)

(a) The highest site boundary diffusion and deposition factors occurred during the April through September growing season. Note that for the primary vent stack release pathway, none of the off-site receptor diffusion and deposition factors (located at 0.25-mile increments beyond the site boundary) exceeded the site boundary diffusion and deposition factors.

8.0 BASES FOR LIQUID AND GASEOUS MONITOR SETPOINTS

8.1 Basis for the Liquid Waste Test Tank Monitor Setpoint

The liquid waste test tank monitor setpoint must ensure that the limits of Part A Control C.5.1 are not exceeded in combination with any other site discharge pathways. The liquid waste test tank monitor is placed upstream of the major source of dilution flow.

The derivation of Equation 5-1 begins with the general equation for the response of a radiation monitor:

$$R = \sum C_{\gamma i} \; S_{li} \qquad (8\text{-}1)$$

$$(\text{cps}) = \left(\frac{\mu\text{Ci}}{\text{ml}}\right)\left(\frac{\text{cps - ml}}{\mu\text{Ci}}\right)$$

where:

R = Response of the monitor to radioactivity (cps).

S_{li} = Detector counting efficiency for radionuclide "i" (cps/(μCi/ml)).

$C_{\gamma i}$ = Activity concentration of each gamma emitting radionuclide "i" in the mixture that the monitor has a response efficiency sufficient to detect (μCi/ml).

The detector calibration procedure for the liquid waste test tank monitor at Seabrook Station establishes counting efficiency by use of a known calibration source standard and a linearity response check. Therefore, in Equation 8-1 one may substitute S_l for S_{li}, where S_l is the detector counting efficiency determined from the calibration procedure. Therefore, Equation 8-1 becomes:

$$R = S_i \; \sum C_{\gamma} \qquad (8\text{-}2)$$

$$(\text{cps}) = \left(\frac{\text{cps - ml}}{\mu\text{Ci}}\right)\left(\frac{\mu\text{Ci}}{\text{ml}}\right)$$

The ECL for a given radionuclide must not be exceeded at the point of discharge to the environment. When a mixture of radionuclides is present, 10 CFR 20 specifies that the concentration (excluding dissolved and entrained noble gases) at the point of discharge shall be limited as follows:

$$\sum \frac{Cd_i}{ECL_i} \leq 10 \qquad (8\text{-}3)$$

where:

C_{di} = Activity concentration of radionuclide "i" determined to be present in the mixture at the point of discharge to the environment (μCi/ml).

ECL_i = Effluent concentration limit (ECL) for radionuclide "i" (except for dissolved and entrained noble gas) in μCi/ml as specified in 10 CFR 20, Appendix B, Table 2. The limit for the sum of all noble gases in the waste discharge is 2E-04 μCi/ml. (See ODCM Appendix B for listing.)

The activity concentration of radionuclide "i" at the point of discharge is related to the activity concentration of each radionuclide at the monitor as follows:

$$C_{di} = \frac{F_m}{F_d}(C\gamma_i + C\beta_i)$$

$$\left(\frac{\mu Ci}{ml}\right) = \left(\frac{gpm}{gpm}\right)\left(\frac{\mu Ci}{ml}\right)$$

and with equivalence of $C_i = (C\gamma_i + C\beta_i)$, Equation 8-4 can be written as

$$C_{di} = \frac{F_m}{F_d} C_i$$

where:

F_m = Flow rate past monitor (gpm)

F_d = Flow rate out of discharge tunnel (gpm)

$C\beta_i$ = Activity concentration of non gamma emitting radionuclide "i" in the mixture at the monitor for which the monitor response is inefficient to detect (μCi/ml).

C_i = The activity concentration of each radionuclide "i" in the waste stream. This includes both gamma and non gamma emitters, such as tritium.

Substituting the right half of Equation 8-4 for C_{di} in Equation 8-3, and solving for F_d/F_m yields the dilution factor needed to complete Equation 8-3:

$$DF_{min} \leq \frac{F_d}{F_m} \geq \sum_i \frac{C_i}{10ECL_i} \qquad (8\text{-}5)$$

$$\left(\frac{gpm}{gpm}\right) \left(\frac{\mu Ci - ml}{ml - \mu Ci}\right)$$

where:

ECL_i = Effluent concentration limit (ECL) for radionuclide "i" (except for dissolved and entrained noble gas) in μCi/ml as specified in 10 CFR 20, Appendix B, Table 2. For noble gases, a value of 2E-04 μCi/ml is used for the limit of the sum of noble gases in the waste stream.

If F_d/F_m is less than DF_{min}, then the tank may not be discharged until either F_d or F_m or both are adjusted such that:

$$DF_{min} \leq \frac{F_d}{F_m} \qquad (8\text{-}5)$$

The maximum allowable discharge flow rate past the monitor can be found by setting F_m to F_{max} and its equivalents, i.e:

$$F_{max} = \frac{F_d}{DF_{min}}$$

Usually F_d/F_m is greater than DF_{min} (i.e., there is more dilution than necessary to comply with Equation 8-3), but must be satisfied since the monitor can only detect the gamma emitting portion of the waste stream. The response of the liquid waste test tank monitor at the setpoint is therefore:

$$R_{setpoint} = f_1 \times \frac{F_d}{F_m \times DF_{min}} \times S_l \sum C\gamma_i$$

$$(cps) \quad ( ) \qquad ( ) \quad \left(\frac{cps - ml}{\mu Ci}\right)\left(\frac{\mu Ci}{ml}\right) \qquad (8\text{-}6) \qquad 0$$

or with F_{max} substituted into Equation 8-6 for the maximum allowable discharge flow rate $\left(\frac{F_d}{DF_{min}}\right)$, the setpoint equation can be stated also as:

$$R_{setpoint} = f_1 \text{ x } \frac{F_{max}}{F_m} \text{ x } S_i \Sigma\, C\gamma_i$$

where f_1 is equal to the fraction of the total concentration of ECL at the discharge point to the environment to be associated with the test tank effluent pathway, such that the sum of the fractions of the five liquid discharge pathways is equal to or less than one ($f_1 + f_2 + f_3 + f_4 + f_5 \leq 1$). The five monitored liquid effluent pathways are derived from: (f_1) the Liquid Waste Test Tanks, (f_2) the Turbine Building Sump, (f_3) Steam Generator Blowdown, (f_4) Primary Component Cooling, and (f_5) Water Treatment Liquid Effluent (the Condensate Polishing System).

The monitoring system is designed to incorporate the detector efficiency, S_1, into its software. This results in an automatic readout in µCi/ml or µCi/cc for the monitor response. Since the conversion for changing cps to µCi/ml is inherently done by the system software, the monitor response setpoint can be calculated in terms of the total waste test tank activity concentration in µCi/ml determined by the laboratory analysis. Therefore, the setpoint calculation for the liquid waste test tank is:

$$R_{setpoint} = f_1 \text{ x } \frac{F_d}{F_m \text{ x } DF_{min}} \text{ x } \Sigma \quad C\gamma_i \qquad (5\text{-}1)$$

$$\left(\frac{\mu Ci}{ml}\right) \quad ( ) \quad ( ) \quad \left(\frac{\mu Ci}{ml}\right)$$

All liquid effluent pathway monitors are similar to the Liquid Waste Test Tank Monitor in design and function as described above for ensuring the plant site's effluent concentration limits are not exceeded in combination with each other.

8.2 Basis for the Plant Vent Wide Range Gas Monitor Setpoints

The setpoints of the plant vent wide range gas monitors must ensure that Part A Control C.7.1.1.a is not exceeded. Part B, Sections 3.4 and 3.5 show that Equations 3-3 and 3-4 are acceptable methods for determining compliance with that Part A Control. Which equation (i.e., dose to total body or skin) is more limiting depends on the noble gas mixture. For the limiting setpoint case, the gas mixture associated with the fuel gap activity at time of shutdown (UFSAR Table 15.7-20) indicates that the total body dose rate to the maximum offsite receptor is the limiting dose rate type. The derivations of Equations 5-5 and 5-6 begin with the general equation for the response R of a radiation monitor:

$$R = \sum_i S_{gi} \quad C_{mi} \tag{8-7}$$

$$(\text{cpm}) = \left(\frac{\text{cpm - cm}^3}{\mu\text{Ci}}\right)\left(\frac{\mu\text{Ci}}{\text{cm}^3}\right)$$

where:

R	=	Response of the instrument (cpm)
S_{gi}	=	Detector counting efficiency for noble gas "i" (cpm/(μCi/cm^3))
C_{mi}	=	Activity concentration of noble gas "i" in the mixture at the noble gas activity monitor (μCi/cm^3)

C_{mi}, the activity concentration of noble gas "i" at the noble gas activity monitor, may be expressed in terms of $\dot{Q}_i$ by dividing by F, the appropriate flow rate. In the case of the plant vent noble gas activity monitors the appropriate flow rate is the plant vent flow rate.

$$C_{mi} = \dot{Q}_i \quad \frac{1}{F} \tag{8-8}$$

$$\left(\frac{\mu\text{Ci}}{\text{cm}^3}\right) = \left(\frac{\mu\text{Ci}}{\text{sec}}\right)\left(\frac{\text{sec}}{\text{cm}^3}\right)$$

where:

$\dot{Q}_i$	=	The relative release rate of noble gas "i" identified or postulated to be in the mixture.
F	=	Appropriate flow rate (cm^3/sec)

Substituting the right half of Equation 8-8 into Equation 8-7 for C_{mi} yields:

$$R = \sum_i S_{gi} \quad \dot{Q}_i \quad \frac{1}{F} \tag{8-9}$$

$$(\text{cpm}) = \left(\frac{\text{cpm - cm}^3}{\mu\text{Ci}}\right)\left(\frac{\mu\text{Ci}}{\text{sec}}\right)\left(\frac{\text{sec}}{\text{cm}^3}\right)$$

As in the case before, for the liquid waste test tank monitor, the plant vent wide range gas monitor establishes the detector counting efficiency by use of a calibration source. Therefore, S_g can be substituted for S_{gi} in Equation 8-9, where S_g is the detector counting efficiency determined from the calibration procedure. Therefore, Equation 8-9 becomes:

$$R = S_g \quad \frac{1}{F} \sum_i \dot{Q}_i \tag{8-10}$$

$$(\text{cpm}) = \left(\frac{\text{cpm - cm}^3}{\mu\text{Ci}}\right) \left(\frac{\text{sec}}{\text{cm}^3}\right) \left(\frac{\mu\text{Ci}}{\text{sec}}\right)$$

The total body dose rate due to noble gases is determined with Equation 3-3a:

$$\dot{D}_{tb(e)} = 0.85 * \sum_i (\dot{Q}_i * DFB_i) \tag{3-3a}$$

$$\left(\frac{\text{mrem}}{\text{yr}}\right) = \left(\frac{\text{pCi - sec}}{\mu\text{Ci - m}^3}\right) \quad \left(\frac{\mu\text{Ci}}{\text{sec}}\right) \quad \left(\frac{\text{mrem - m}^3}{\text{pCi - yr}}\right)$$

where:

$\dot{D}_{tb(e)}$	=	Total body dose rate (mrem/yr)
0.85	=	(1.0E+06) x (8.5E-07) (pCi-sec/μCi-m^3)
1E+06	=	Number of pCi per μCi (pCi/μCi)
8.5E-07	=	$[X/Q]^{\gamma}$, maximum off-site average gamma atmospheric dispersion factor (sec/m^3) for primary vent stack releases
$\dot{Q}_i$	=	The relative release rate of noble gas "i" identified or postulated to be in the gas mix (μCi/sec).
DFB_i	=	Total body dose factor (see Table B.1-10) (mrem-m^3/pCi-yr)

A composite total body gamma dose factor, DFB_c, may be defined such that:

$$DFB_c \sum_i \dot{Q}_i = \sum_i \dot{Q}_i \; DFB_i \tag{8-11}$$

$$\frac{mrem - m^3}{pCi - yr} \left(\frac{\mu Ci}{sec}\right) = \left(\frac{\mu Ci}{sec}\right) \left(\frac{mrem - m^3}{pCi - yr}\right)$$

Solving Equation 8-11 for DFB_c yields:

$$DFB_c = \frac{\sum_i \dot{Q}_i DFB_i}{\sum_i \dot{Q}_i} \tag{5-7}$$

Part A Control C.7.1.1.a limits the dose rate to the total body from noble gases at any location at or beyond the site boundary to 500 mrem/yr. By setting $\dot{D}_{tb}$ equal to 500 mrem/yr and substituting DFB_c for DFB_i in Equation 3-3, one may solve for $\sum_i \dot{Q}_i$ at the limiting whole body noble gas dose rate:

$$\sum_i \dot{Q}_i = 588 \quad \frac{1}{DFB_c} \tag{8-12}$$

$$\left(\frac{\mu Ci}{sec}\right) = \left(\frac{mrem - \mu Ci - m^3}{yr - pCi - sec}\right) \left(\frac{pCi - yr}{mrem - m^3}\right)$$

Substituting this result for $\sum_i \dot{Q}_i$ in Equation 8-10 yields R_{tb}, the response of the monitor at the limiting noble gas total body dose rate:

$$R_{tb} = 588 \quad S_g \quad \frac{1}{F} \quad \frac{1}{DFB_c} \tag{8-13}$$

$$(cpm) = \left(\frac{mrem - \mu Ci - m^3}{yr - pCi - sec}\right) \left(\frac{cpm - cm^3}{\mu Ci}\right) \left(\frac{sec}{cm^3}\right) \left(\frac{pCi - yr}{mrem - m^3}\right)$$

The skin dose rate due to noble gases is determined with Equation 3-4a:

$$\dot{D}_{skin(e)} = \sum_i (\dot{Q}_i * DF'_{i(e)}) \qquad (3\text{-}4a)$$

$$\frac{mrem}{yr} = \sum \left(\frac{\mu Ci}{sec}\right) \left(\frac{mrem - sec}{\mu Ci - yr}\right)$$

where:

$\dot{D}_{skin(e)}$ = Skin dose rate (mrem/yr)

$\dot{Q}_i$ = As defined above.

$DF'_{i\ (e)}$ = Combined skin dose factor (see Table B.1-10) (mrem-sec/μCi-yr)

A composite combined skin dose factor, DF'_c, may be defined such that:

$$DF'_c * \sum_i \dot{Q}_i = \sum_i (\dot{Q}_i * DF'_{i(e)}) \qquad (8\text{-}14)$$

$$\left(\frac{mrem - sec}{\mu Ci - yr}\right) \left(\frac{\mu Ci}{sec}\right) = \left(\frac{\mu Ci}{sec}\right) \left(\frac{mrem - sec}{\mu Ci - yr}\right)$$

Solving Equation 8-14 for DF'_c yields:

$$DF'_c = \frac{\sum_i \dot{Q}_i DF'_{i\ (e)}}{\sum_i \dot{Q}_i} \qquad (5\text{-}8)$$

(5-8

Part A Control C.7.1.1.a limits the dose rate to the skin from noble gases at any location at or beyond the site boundary to 3,000 mrem/yr. By setting $\dot{D}_{skin}$ equal to 3,000 mrem/yr and substituting DF'_c for DF'_i in Equation 3-4 one may solve for $\sum_i \dot{Q}_i$ at the limiting skin noble gas dose rate:

$$\sum_i \dot{Q}_i = 3{,}000 \quad \frac{1}{DF'_c} \tag{8-15}$$

$$\left(\frac{\mu Ci}{sec}\right) \quad \left(\frac{mrem}{yr}\right)\left(\frac{\mu Ci - yr}{mrem - sec}\right)$$

Substituting this result for $\sum_i \dot{Q}_i$ 0in Equation 8-10 yields R_{skin}, the response of the monitor at the limiting noble gas skin dose rate:

$$R_{skin} = 3{,}000 \quad S_g \quad \frac{1}{F} \quad \frac{1}{DF'_c}$$

$$(cpm) \quad \left(\frac{mrem}{yr}\right)\left(\frac{cpm - cm^3}{\mu Ci}\right)\left(\frac{sec}{cm^3}\right)\left(\frac{\mu Ci - yr}{mrem - sec}\right) \tag{8-16}$$

As with the liquid monitoring system, the gaseous monitoring system is also designed to incorporate the detector efficiency, S_g, into its software. The monitor also converts the response output to a release rate (μCi/sec) by using a real time stack flow rate measurement input. Therefore, multiplying by the main plant vent flow rate measurement (F), the Equations 8-13 and 8-16 become:

$$R_{tb(e)} = 588 \quad \frac{1}{DFB_c} \tag{5-5}$$

$$\left(\frac{\mu Ci}{sec}\right) = \left(\frac{mrem - \mu Ci - m^3}{yr - pCi - sec}\right)\left(\frac{pCi - yr}{mrem - m^3}\right)$$

$$R_{skin(e)} = 3{,}000 \quad \frac{1}{DF'_c} \tag{5-6}$$

$$\left(\frac{\mu Ci}{sec}\right) = \left(\frac{mrem}{yr}\right)\left(\frac{\mu Ci - yr}{mrem - sec}\right)$$

These equations assume that the main plant vent is the only release point contributing to the determination of limiting offsite dose rate. The Control dose rate limits (500 mrem/yr and 3000 mrem/yr for total body and skin, respectively) apply to combination of all release points to the limiting offsite receptor. Administrative fractions (f) should be applied to main plant vent setpoint calculation as a multiplier, and any other release points, such that the summation of all fractions is less than or equal to 1. This provides for the combined impact of all release points to ensure that selected setpoints alarm at or before the site dose rate limits is exceeded.

8.3 Basis for PCCW Head Tank Rate-of-Change Alarm Setpoint

The PCCW head tank rate-of-change alarm will work in conjunction with the PCCW radiation monitor to alert the operator in the Main Control Room of a leak to the Service Water System from the PCCW System. For the rate-of-change alarm, a setpoint based on detection of an activity level of 10^{-8} μCi/cc in the discharge of the Service Water System has been selected. This activity level was chosen because it is the minimum detectable level of a service water monitor if such a monitor were installed. The use of rate-of-change alarm with information obtained from the liquid sampling and analysis commitments described in Table A.6.1-1 of Part A ensure that potential releases from the Service Water System are known. Sampling and analysis requirements for the Service Water System extend over various operating ranges with increased sampling and analysis at times when leakage from the PCCW to the service water is occurring and/or the activity level in the PCCW is high.

8.4 Basis for Waste Gas Processing System Monitors (RM-6504 and RM-6503)

The maximum allowable setpoint for the waste gas system monitors (response in $\mu Ci/cm^3$) can be determined by equating the limiting off-site noble gas dose rate from the plant vent to the total body or skin dose rate limits of Part A Control C.7.1.1.a, assuming that all the activity detected by the vent wide-range gas monitors is due to waste gas system discharges.

By evaluating the noble gas radionuclide with the most limiting dose factor as given on Table B.1-10, a conservative activity release rate from the plant vent for both whole body and skin dose rate conditions can be calculated. From Table B.1-10, Kr-89 is seen to be the most restrictive individual noble gas if it were present in the effluent discharge. Applying plant vent setpoint equation 5-5 for the whole body, and equation 5-6 for the skin, the maximum allowable plant vent stack release rate can be calculated as follows:

$$R_{tb} = 588 \ 1/DFB_c \qquad (5\text{-}5)$$

where:

R_{tb} = plant vent maximum release rate (μCi/sec) based on the whole body does rate limit of 500 mrem/yr

DFB_c = 1.66E-02 (mrem-m^3/pCi-yr), whole body dose factor for Kr-89

588 = conversion factor (mrem-μCi-m^3/yr-pCi-sec)

Therefore:

R_{tb} = 588 1/1.66E-02

= 35,421 μCi/sec maximum release rate at plant vent

Next, the skin dose rate limit is evaluated from equation 5-6 in a similar fashion as follows:

$$R_{skin} = 3000 \ 1/DF'_c \qquad (5\text{-}6)$$

where:

R_{skin} = plant vent maximum release rate (μCi/sec) based on skin dose rate limit of 3000 mrem/yr.

DF'_c = 2.45E-02 mrem-sec/μCi-yr skin dose factor for Kr-89

3000 = Site boundary skin dose rate limit (mrem/yr)

therefore:

R_{skin} = 3000 (mrem/yr) 1/2.45E-02(mrem-sec/μCi-yr)

= 122,449 μCi/sec from the plant vent

Comparing the release rate limit for the whole body to that for the skin (i.e., 35,421 μCi/sec vs 122,449 μCi/sec, respectively) it is determined that the release rate for the whole body is limiting.

Next, to get the maximum plant vent release rate from the waste gas system discharge, equate the plant vent maximum release rate limit for the whole body equal to the waste gas system activity concentration times its flow rate to the plant vent, i.e.:

R_{tb} = 35,421(μCi/sec) = R_{wg}(μCi/cm^3) F_{wg}(cm^3/sec)

or solving for R_{wg}:

R_{wg}(μCi/cm^3) = 35,421(μCi/sec) / F_{wg}(cm^3/sec)

where:

R_{wg} = maximum concentration (setpoint limit) at the waste gas system monitors

F_{wg} = waste gas design flow of 566.4 cm^3/sec (1.2 cfm)

therefore:

R_{wg}(μCi/cm^3) = 35,421(μCi/sec) / 566.4(cm^3/sec)

= 62.5 μCi/cm^3

This represents the maximum waste gas discharge concentration which would equal the site boundary whole body dose rate limit for plant vent releases. Administrative controls may set alert alarm and high alarm (waste gas isolation) setpoints on the waste gas monitors as some multiple of expected activity concentration, such as 1.5 and 2 times, respectively, as long as the maximum setpoint does not exceed 62.5 μCi/cm^3. This provides operational controls to be exercised before any waste gas discharges could equate to the Part A Control C.7.1.1.a.

The primary process monitor noted in Part A Control C.5.2 is RM-6504, which is downstream of the waste gas discharge compressor at the end of the process system. Monitor RM-6503 is on the inlet side of the compressor downstream of the charcoal delay beds, and is considered as an alternate monitor if RM-6504 is inoperable. For the purpose of setting the maximum discharge setpoint, RM-6503 is treated the same as RM-6504, which assumes no additional source reduction before discharge to the plant vent.

8.5 Basis for the Main Condenser Air Evacuation Monitor Setpoint (RM-6505)

The maximum allowable setpoint for the main condenser air evacuation monitor must be evaluated for two modes of operation. For normal operations the monitor is responding to a low flow rate that is typically released through the plant vent stack. During start-up (hogging mode), the monitor response must be related to a high flow rate that is being released from the turbine building which is considered a ground level release. In both instances, the setpoint can be determined by equating the limiting off-site noble gas dose rate from the release point to the total body or skin dose rates of Part A Control C.7.1.1.a. The most restrictive noble gas mixture has been found to be represented by the noble gases associated with the fuel gap activity at the time of plant shutdown. This mixture is listed on UFSAR Table 15.7-20, and provides a limiting setpoint calculation that bounds other potential or observed offgas mix conditions.

In addition to monitoring the main condenser air, the air evacuation monitor response is also used as an indicator for Turbine Gland Seal Condenser exhaust. Since this is a potential release pathway during both the normal and the hogging modes of operation, the impact is considered in the setpoint calculations.

8.5.1 Limiting Example for the Air Evacuation Monitor Setpoint During Normal Operations

During normal power operation, the maximum allowable setpoint for the air evacuation monitor is determined by applying plant vent setpoint equation 8-13 for the total body, and equation 8-16 for the skin. Therefore, the maximum allowable stack release rate can be calculated as follows:

$$R_{tb(e)} = (588)\,(S_g)\,(1/F)\,(1/DFB_c) \qquad (8\text{-}13)$$

$$(\text{cpm}) = (\text{mrem-}\mu\text{Ci-m}^3\text{/yr-pCi-sec})\,(\text{cpm-cm}^3/\mu\text{Ci})\,(\text{sec/cm}^3)(\text{pCi-yr/mrem-m}^3)$$

where:

$R_{tb(e)}$ = count rate (cpm) for the plant vent maximum release rate based on the total body dose rate limit of 500-mrem/yr

588 = conversion factor (mrem-μCi-m^3/yr-pCi-sec)

S_g = the detector response efficiency (cpm-cm^3/μCi) as determined from monitor calibration. For the air evacuation monitor, a typical value is 1.87E+08 cpm-cm^3/μCi.

F = release flow rate. During normal operations, a typical flow value ranges from 10 to 50 cfm (2.36E+04 cc/sec maximum) for the air evacuation pathway.

DFB_c = the composite total body dose factor, (mrem-m^3/pCi-yr). For different gas mixes, the composite can be found from:

$$DFB_c = \sum_i \dot{Q}_i\, DFB_i\, 0 \,/\, \sum_i \dot{Q}_i \qquad (5\text{-}7)$$

DFB_c for the limiting gas mixture is 4.86E-03 mrem-m^3/pCi-yr (See Section 5.2.1.2)

Therefore,

$R_{tb(e)}$ = 588 1.87E+08 (1/2.36E+04) (1/4.86E-03)

= 9.59E+08 cpm detector count rate for a maximum release rate at the plant vent based on the total body dose rate.

Next, the off-site skin dose rate limit is evaluated from equation 8-16 in a similar fashion as follows:

$$R_{skin(e)} = 3000\ S_g\ (1/F)\ (1/DF'_c) \qquad (8\text{-}16)$$

(cpm) = (mrem/yr) (cpm-cm^3/Ci) (sec/cm^3) (μCi-yr/mrem-sec)

where:

$R_{skin(e)}$ = count rate (cpm) for a plant vent maximum release rate based on the skin dose rate limit of 3000 mrem/yr

DF'_c = the elevated release skin dose factor for the limiting noble gas mix associated with fuel gap activity at shutdown is calculated in the example provided in Section 5.2.1.2, and is equal to 6.80E-03 (mrem-sec/μCi-yr).

Therefore,

$R_{skin(e)}$ = 3000 1.87E+08 (1/2.36E+04) (1/6.80E-03)

= 3.50E+09 cpm detector count rate for a maximum release rate at the plant vent based on the skin dose rate.

Comparing the release rate limit for the total body to that of the skin (i.e., 9.59E+08 cpm versus 3.50E+09 cpm, respectively) it is determined that the release rate for the total body is limiting in this case.

Since during normal operations the Turbine Gland Seal Condenser exhaust has the potential to be a minor additional contribution to the total site release, the effective contribution from the main condenser exhaust must be limited to some fraction of the calculated value. The contribution from the Turbine Gland Seal Condenser exhaust is expected to be minor because this system handles only 670 lbs/hour of steam which is a very small fraction of the 1.5E+07 lbs/hour of secondary side steam that the main condenser handles. Therefore, the maximum alarm is set at 6.71E+08 cpm, which is 70% of the calculated value, to ensure that the contribution of the two does not exceed the dose rate limit of Part A Control C.7.1.1.a. During normal operations, this would represent the maximum allowable count rate on the air evacuation monitor that would equate to the site boundary total body dose rate limit or less.

8.5.2 Example for the Air Evacuation Monitor Setpoint During Startup (Hogging Mode)

During startup (hogging mode), the determination of the air evacuation setpoint must take into account a larger air flow rate that is also released as a ground level effluent. The flow rate must also include the contribution from the Turbine Gland Seal Condenser exhaust, which is a potential release pathway which the air evacuation monitor response must also take into account. For ground releases, the general equation 8-10 is used to represent the monitor count rate.

$$R = (S_g)\,(1/F)\,\sum_i \dot{Q}_i \qquad (8\text{-}10)$$

$$(\text{cpm}) = (\text{cpm-cm}^3/\mu\text{Ci})\,(\text{sec/cm}^3)\,(\mu\text{Ci/sec})$$

where:

R = detector count rate (cpm)

S_g = the detector efficiency (cpm-cm^3/μCi)

F = release flow rate (cm^3/sec)

$\dot{Q}_i$ = the release rate of noble gas "i" in the mixture, for each noble gas listed in Table B.1-10.

For a ground release, the off-site total body dose rate is based on:

$$\dot{D}_{tb(g)} = 3.4 \sum_i (\dot{Q}_i DFB_i) \qquad (3\text{-}3b)$$

A composite total body dose factor, DFB_c can be defined such that:

$$DFB_c \sum_i \dot{Q}_i = \sum_i (\dot{Q}_i DFB_i) \qquad (8\text{-}11)$$

By substituting 8-11 into 3-3b and rearranging to solve for $\sum_i \dot{Q}_i$ the following equation is obtained:

$$\sum_i \dot{Q}_i = (\dot{D}_{(tb(g)} / 3.4)\ (1/DFB_c)$$

By inserting a limiting value of 500 mrem/yr as $\dot{D}_{tb(g)}$ this simplifies to:

$$\sum_i \dot{Q}_i = 147\ (1/DFB_c)$$

Insertion of this equation into equation 8-10 yields:

$$R_{tb(g)} = 147\ S_{(g)}\ (1/F)\,(1/DFB_c)$$

$$(cpm) = (mrem\text{-}\mu Ci\text{-}m^3/yr\text{-}pCi\text{-}sec)\ (cpm\text{-}cm^3/\mu Ci)\ (sec/cm^3)\ (pCi\text{-}yr/mrem\text{-}m^3)$$

where:

$R_{tb(g)}$ = count rate (cpm) for the maximum ground release rate based on the total body dose rate limit of 500 mrem/yr.

147 = conversion factor (mrem-μCi-m^3/yr-pCi-sec)

S_g = the detector response efficiency for the air evacuation monitor (a typical value of 1.87E+08 cpm-cm^3/μCi is applied in this example).

F = release flow rate. During the hogging mode of operation, a value of 4.72E+06 cm^3/sec (10,000 cfm) is assumed. This represents the hogging flow that is discharged to the Turbine Building roof via the air evacuation monitor. An additional 1800 cfm is discharged from the Gland Seal Condenser exhaust directly to the Turbine Building roof without passing via the air evacuation monitor. To account for this unmonitored flow, an administrative fraction (f_{gland}) is applied to the setpoint calculation to ensure that the monitor would alarm before the dose rate limit for the combined release would be exceeded. One approach for determining a conservative fraction is to assume that the radioactivity concentration in the gland seal exhaust is equal to the main condenser offgas, even though the steam flow to the gland seal system is a very small fraction of the steam flow to the main condenser. Then the ratio of the Gland Seal Condenser exhaust flow to the total flow of hogging discharge and gland seal condenser provides for the relative flow of both sources. For the stated conditions, the unmonitored flow is about 15 % of the total (as additional conservatism, this could be doubled to 30% for the relative proportion assumed to be contributed by the unmonitored pathway). Therefore, f_{gland} = 1-0.3, or 0.7 as the fraction applied to the air evacuation monitor setpoint. An additional fraction (f_g) is also applied to account for the potential offsite dose rate contribution from this total ground source vs the plant main vent ($f_g \leq 1 - f_v$). The split for this illustration is set at 0.3 for ground sources and 0.7 for the plant vent.

DFBc = Composite total body dose factor which weights the combination of total body dose factors (from ODCM Table B.1-10) of each radionuclide assumed to be in the gas mix in accordance with the fraction that it makes up of the total release. For the limiting noble gas mix associated with fuel gap activity at shutdown (see example calculation provided in Section 5.2.1.2), the value is equal to 4.86E-03 (mrem-m^3/pCi-yr).

In addition, two administrative fractions are applied to the general calculation to account for other release contributions to the site dose that do not go by the air evacuation monitor. The first (f_g) is the fraction of the site boundary total body dose rate limit to be administratively assigned to monitored ground level releases (for this illustration = 0.3) such that the combination of the plant vent fraction (f_v) and ground fraction (f_g) is less than or equal to 1 ($f_g \leq 1 - f_v$). The second release reduction factor (f_{gland}) is administratively assigned to account for potential unmonitored contributions from the Turbine Gland Seal Condenser exhaust (for this illustration = 0.7) which discharges to the Turbine Building roof without going past the air evacuation monitor

Therefore:

$R_{tb(g)}$ = (147) (1.87E+08) (1/4.72E+06) (1/4.86E-03) (0.3) (0.7)

= 2.52E+05 cpm detector count rate for a maximum ground release rate based on the total body dose rate.

Next, the off-site skin dose rate limit for a ground release is evaluated from equation 3-4b in a similar fashion as follows:

$$\dot{D}_{skin(g)} = \sum_i \left(\dot{Q}_i DF_{i(g)}\right) \qquad (3\text{-}4b)$$

A composite skin dose factor, $DF'_{c(g)}$ can be defined such that:

$$DF'_{c(g)} \sum_i \dot{Q}_i = \sum_i \left(\dot{Q}_i DF_{i(g)}\right) \qquad (8\text{-}17)$$

By substituting 8-17 into 3-4b and rearranging to solve for $\sum_i \dot{Q}_i$ the following equation is obtained:

$$\sum_i \dot{Q}_i = \dot{D}_{skin(g)} \left(1/DF'_{c(g)}\right)$$

By inserting a limiting value of 3000 mrem/yr as $\dot{D}_{skin(g)}$ this simplifies to:

$$\sum_i \dot{Q}_i = 3000\ (1/DF'_{c(g)})$$

Insertion of this equation into equation 8-10 yields:

$R_{skin(g)}$ = 3000 S_g (1/F) (1/$DF'_{c(g)}$)

(cpm) = (mrem/yr) (cpm-cm^3/µCi) (sec/cm^3) (µCi-yr/mrem-sec)

where:

$R_{skin(g)}$ = Count rate (cpm) for the maximum ground release rate based on the skin dose rate limit of 3000 mrem/yr.

$DF'_{c(g)}$ = The composite ground release skin dose factors which weights the combination of the combined skin dose factors (from ODCM Table B.1-10) of each radionuclide assumed to be in the gas mix in accordance with the fraction that it makes up of the total release. For the limiting noble gas mix associated with fuel gap activity at shutdown (see example calculation provided in Section 5.2.1.2), the value is equal to 6.80E-03 (mrem-sec/μCi-yr).

As with the whole body dose rate above, the same two administrative fractions, f_g and f_{gland} are also applied to the skin dose rate response.

Therefore:

$R_{skin(g)}$ = (3000) (1.87E+08) (1/4.72E+06) (1/6.80E-03) (0.3) (0.7)

= 3.67E+06 cpm detector count rate for a maximum ground release rate based on the skin dose rate.

Comparing the release rate limit for the total body to that of the skin (i.e., 2.52E+05 cpm versus 3.67E+06 cpm, respectively) it is determined that the release rate for the total body is limiting in this case.

APPENDIX A

DOSE CONVERSION FACTORS

APPENDIX A

METHOD I DOSE CONVERSION FACTORS

I. LIQUID PATHWAYS - SEABROOK SITE SPECIFIC DCF'S

The models used to assess doses resulting from effluents into liquids is derived from Appendix A of Reg. Guide 1.109. Since Seabrook is a salt water site, the assumed pathways of exposure taken from Reg Guide 1.109 are Aquatic foods - fish; Aquatic foods -invertebrates; and dose from shoreline deposits (direct dose). No drinking water or irrigation pathways exist because of the salt water environment. In addition, exposures resulting from boating and swimming activities have been included for key radionuclides even though Reg. Guide 1.109 identifies these pathways as not contributing any significant contribution to the total dose, and therefore does not provide dose equations for them. For completeness, the swimming and boating pathways have been included using the dose models from the HERMES code (HEDL-TME-71-168, Dec. 1971) section G, Water Immersion.

The Method I dose conversion factors are derived by calculating the dose impact to individuals via the site specific pathways for a unit activity release (1 curie per nuclide). For each pathway, doses by radionuclide are calculated for each of the 7 organs (including whole body) for each of the four age groups (adult, teen, child, and infant). The Method I dose factor for each nuclide is then selected by taking the highest factor for any organ in any of the age groups for all the exposure pathways combined. The list of dose factors in the ODCM then represents a combination of different limiting organs and age groups which, when used to calculate a dose impact from a mix of radionuclides released in liquid effluents, gives a conservative dose since it combines the exposure to different organs and age groups as if there was a single critical organ-age group.

As an example of how the liquid dose conversion factors are developed, the following calculation for Co-60 is shown. The critical organ/age group is selected based on the full assessment of all organs and age groups.

Factor for fish Ingestion:

The general equation for ingestion doses in RG 1.109 is eq. A-3.

$$1119.7 * \frac{U_{ap} * M_p}{F} * \sum_i Q_i * B_{ip} * D_{aipj} * e^{-\lambda * t_p} 1$$

The full assessment for the ODCM dose factors indicated that for i = Co-60, the maximum dose (mrem/yr) is to the GI-LLI of an adult as the target organ and age group, therefore:

U_{ap} := 21 kg/yr adult usage factor for fish

M_p	:=	0.1	mixing ratio for near field dilution provided by submerged multiport diffuser.
F	:=	918	cu. ft./sec effluent flow rate for circulating water system
Q_i	:=	1.0	curies/year released of Co-60 assumed
B_{ip}	:=	100	equilibrium bioaccumulation factor for Co-60 in salt water fish, in liters/kg
D_{aipj}	:=	$4.02 * 10^{-5}$	mrem/pCi. adult GI-LLI ingestion dose factor from RG-1.109, table E-11.
λ	:=	$1.501 * 10^{-5}$	decay constant for Co-60 in 1/hrs.
t_p	:=	24	time between release and ingestion, in hrs.
1119.7			is the factor to convert from Ci/yr per ft^3/sec to ρCi/liter. Note that RG 1.109 uses 1100 as a rounded approximation.

Therefore the dose from fish to adult GI-LLI is (mrem/yr):

$$1119.7 * \frac{U_{ap} * M_p}{F} * Q_i * B_{ip} * D_{aipj} * e^{-\lambda * t_p} = 0.01032$$

Factor for invertebrate ingestion:

Next, the dose from invertebrates to the adult GI-LLI is given by the same general equation but with the following variables changed:

U_{ap}	:=	5	kg/yr usage factor
B_{ip}	:=	1000	1/kg bioaccumulation factor

all other variables the same as above

therefore the dose from invertebrates is (mrem/yr):

$$1119.7 * \frac{U_{ap} * M_p}{F} * Q_i * B_{ip} * D_{aipj} * e^{-\lambda * t_p} = 0.02453$$

Factor for shoreline direct dose:

The general equation for direct dose from shoreline deposits is taken from equation A-7 in RG-1.109 as (mrem/yr):

$$111970 * \frac{U_{ap} * M_p * W}{F} * \sum_i Q_i * T * D_{aipj} * e^{-\lambda * t_p} * \left[1 - e^{-\lambda * t_b}\right] 4$$

It is assumed that all internal organ doses also receive exposure from direct external sources, therefore each organ dose due to ingestion must have an external component added. For the above equation, the site specific variables for an adult exposure to a 1 curie per year release of Co-60 are:

U_{ap}	:=	334	hrs/year usage factor used for assumed shoreline activities at Seabrook.
M_p	:=	0.1	mixing ratio for near field dilution provided by the submerged multiport diffuser and assume to be extended to the beach continuously.
W	:=	0.5	shorewidth factor for ocean sites, dimensionless
T	:=	$1.923*10^3$	radioactive half life in days for Co-60
D_{aipj}	:=	$1.70*10^{-8}$	dose factor for Co-60 due to deposits in sediments, units of (mrem/hr)/(pCi/m^2)
t_p	:=	0.0	transit time to point of exposure, hrs
t_b	:=	131400	period that sediment is assumed to be exposed to water contamination for long term buildup, set at 15 years for Method I DCF's
Q_i	:=	1.0	curies per year, Co-60 assumed
111970			conversion factor to convert (Ci/yr)/(ft^3/sec) to pCi/liter and account for the proportionality constant used in sediment model

Therefore the dose to the whole body and each organ due to direct exposure to the shoreline (mrem/yr) is:

$$111970 * \frac{U_{ap} * M_p * W}{F} * Q_i * T * D_{aipj} * e^{-\lambda * t_p} * \left[1 - e^{-\lambda * t_b}\right] = 0.0573\ 5$$

Direct dose due to Swimming:

The dose due to immersion in water (swimming) is taken from the HERMES computer code. The original ODCM calculation was based on some preliminary dilution assumptions which gave

a near field prompt dilution factor for the multiport diffuser of 8. For single unit operation with both service water and circulating water flow (412,000 gpm), a value of 10 is more realistic. This surface area of the plume is restricted to a small area over the diffuser and does not touch the shoreline approx. 1 mile away. Since the over all impact from swimming is small when compared to the other exposure pathways, the original conservatism on dilution are kept here.

The dose from swimming is given by the following equation:

$$1.0*10^{12}*\frac{U_p}{F_a}*\sum_i Q_i*DF_{im}\ 6 \qquad \text{(mrem/yr)}$$

Where:

U_p	:=	45	hrs/yr, usage factor for swimming for maximum age group (teen) from HERMES.
F_a	:=	$6.56*10^{11}$	liters/yr, estimated annual dilution effluent flow in multiport diffuser
Q_i	:=	1.0	Curies/yr, assumed release rate of nuclide i.
DF_{im}	:=	$4.6*10^{-6}$	mrem-liters per hrs-pCi, dose factor for Co-60 for water immersion taken from HERMES.
$1.0*10^{12}$			constant for pCi/Ci

Therefore the swimming dose for a 1 curie release of Co-60 is (mrem/yr):

$$1.0*10^{12}*U_p*\frac{M_p}{F_a}*Q_i*DF_{im}=3.155*10^{-5}\ 7$$

As can be seen, the contribution of the swimming dose is only about one 30000ths of the total of the RG 1.109 pathways, and can be ignored in the case of Co-60. Similarly, the boating dose as given in HERMES is taken as half of the swimming dose, (and corrected for change in usage assumptions). The resulting dose is found to be less than the swimming dose and can also therefore be discounted in this case.

Total liquid Pathway dose:

The sum of the above liquid pathway doses can now be added to give the total maximum individual dose to the critical organ (adult-GI-LLI) for Co-60. This gives:

0.0103 + 0.0245 + 0.0573 = 0.0921 mrem/yr

Since the internal doses given by the RG-1.109 methods actually are 50 yr dose commitments resulting from one year exposure to the quantity of activity assumed to be released into the water, and the direct dose represents the dose received for the period assumed to be exposed to the pathway, and the activity release was taken as a unit quantity (i.e. Q = 1 Ci), the above total liquid pathway dose can be stated as site specific committed dose factor in mrem/Ci released. For Method I in the ODCM, the critical organ dose factor is seen to be 0.0921 mrem/Ci, as shown above. The value reported on Table B.1-11 (9.22 E-08 mrem/μCi) was generated by a computational routine which gives rise to the round-off difference between it and the above example. The whole body site specific dose factor for the ODCM was calculated in the same way treating the whole body as a separate organ.

II. GASEOUS PATHWAYS - SEABROOK SITE SPECIFIC DCF'S

The models used to assess doses resulting from gaseous effluents in the form of iodines, tritium, and particulates are derived from Appendix C of Reg. Guide 1.109. For Seabrook, it is assumed that at the off site location which exhibits minimum atmospheric dilution for plant releases the following exposure pathways exist: inhalation, ground plane, ingestion of goats milk, meat, stored vegetables, and leafy vegetables.

The Method I dose and dose rate factors are derived by calculating the dose impact to all age group individuals via the site specific pathways for a unit activity release (1 curie per nuclide). For each pathway, doses by nuclide are calculated for each of 7 organs (including the whole body) for each of the 4 age groups. The Method I dose factor for each nuclide is then selected by taking the highest factor for any organ in any of the age groups for all exposure pathways combined. The list of dose factors in the ODCM then represents a combination of different limiting organs and age groups which, when used to calculate the dose impact from a mix of radionuclides released into the atmosphere, gives a conservative dose since it combines the exposure to different organs and age groups as if they were for all the same critical organ-age group.

As an example of how the gaseous particulate dose factors are developed, the following calculation for Mn-54 is shown. The critical organ/age group for Mn-54 was selected based on a full assessment of all organ and age group combinations. For elevated releases from the plant vent stack to the maximum site boundary (max. dose point due to meteorology), the critical organ and age group for Mn-54 was determined to be the GI-LLI for the adult.

PART A: INHALATION DOSE CONTRIBUTION

The general equations for inhalation doses in RG 1.109 are eq. C-3, and C-4 which together give:

$$3.17*10^4*R_a*\left[\frac{X}{Q}\right]*\sum_i Q_i*DFA_{ija} = D_{ja}\,8$$

Where for the case of Mn-54 releases, the variables above are defined as:

$3.17*10^4$			is the number of pCi/Ci divided by the number of second per year
R_a	:=	8000	the breathing rate for age group a (adults) in m^3 /yr.
$\frac{X}{Q}9$	:=	$7.5 * 10^{-7}$	the long term average depleted atmospheric dispersion factor, in sec/m^3, at the maximum exposure point off site (S.B.)
Q_i	:=	1	the release rate of nuclide i to the atmosphere in Ci/yr

$DFA_{ija} := 9.67*10^{-6}$ the inhalation dose factor for nuclide i (Mn-54), organ j (GI-LLI), and age group a (adult) taken from RG 1.109, table E-7, in mrem/pCi inhaled.

Therefore, the inhalation dose to the maximum potential off site individual is given as:

$$3.17*10^4*R_a*\left[\frac{X}{Q}\right]*Q_i*DFA_{ija} = 0.00184 \text{ mrem/yr per Ci } 10$$

PART B: GROUND PLANE DIRECT DOSE CONTRIBUTION

The general equations for ground plane external direct dose in RG 1.109 are equations C-1 and C-2 which together give the dose DG as:

$$8760*1.0*10^{12}*S_F*\left[\frac{D}{Q}\right]*\sum_i Q_i*\frac{1-e^{-\lambda_i*t_b}}{\lambda_i}*DFG_{ij}\ 11$$

Where for the case of Mn-54 releases, the variables in the above equation are defined as:

$1.0*10^{12}$ is the number of pCi per Ci

$S_F := 0.7$ the shielding factor provided by residential structures (dimensionless) for use in calculation accumulated doses over time. Note that for determination of dose rate factors (i.e. instantaneous dose rates) the shielding factor is set equal to 1.0, or in effect no credit for dose reduction is taken for determination of dose rates at points in time.

$\frac{D}{Q}\ 12 := 1.5*10^{-8}$ the long term average relative deposition factor at the maximum site boundary location, in $1/m^2$

$\lambda_i := 0.8105$ is the radiological decay constant for Mn-54 (nuclide i in this case) in 1/yr.

$t_b := 15$ is the time in years over which accumulation is evaluated (approx. midpoint of plant operating life)

$DFG_{ij} := 5.80*10^{-9}$ external dose factor to the whole body, or any internal organ j, for standing on contaminated ground from Mn-54 (RG 1.109 Table E-6) in mrem/hr per pCi/m^2

$Q_i := 1.0$ is the unit release quantity assumed for each nuclide i, in Ci/yr.

8760 is the number of hours in a year

Therefore, the contribution to the total dose made by exposure to the ground plane at the maximum off site exposure location for Mn-54 is given as:

$$8760 * 1.0 * 10^{12} * S_F * \left[\frac{D}{Q}\right] * Q_i * \frac{1 - e^{-\lambda_i * t_b}}{\lambda_i} * DFG_{ij} = 0.658\,13 \qquad \text{mrem per yr per Ci}$$

PART C: INGESTION DOSE CONTRIBUTION:

As an initial step to determining the dose contribution from ingestion of milk, meat, stored vegetables, and leafy vegetables, we must first calculate the radionuclide concentration in forage, produce, and leafy vegetables resulting from atmospheric tranfers of the activity to the surface of the vegetation and onto the soil for root uptake. For all radioiodines and particulate nuclides (except tritium and C-14), the concentration of nuclide i in and on the vegetation at a point of interest can be calculated using R.G. 1.109 equations C-5 and C-6, which combined gives:

$$1.14*10^{8}*\left[\frac{D}{Q}\right]*Q_i*\left[r*\frac{1-e^{-\lambda_{Ei}*t_e}}{Y_v*\lambda_{Ei}}+B_{iv}*\frac{1-e^{-\lambda_i*t_b}}{P*\lambda_i}\right]*e^{-\lambda_i*t_h}\,14$$

PART C.1: Concentration in Produce (stored vegetables)

For the case of Mn-54 released in air emissions to the maximum site boundary, the concentration of Mn in produce grown in the hypothetical garden at that location can be calculated from the above equation where the variables are defined as:

$1.14*10^{8}$		is the number of pCi per Ci divided by the number of hours in a year (8760).
$\frac{D}{Q}=1.5*10^{-8}$ 15		is the relative deposition factor, in $1/m^2$, at the maximum exposure point off site (S. B.)
Q_i	:= 1	the release rate of nuclide i to the atmosphere in Ci/yr
r	:= 0.2	fraction of deposited activity retained on crops, leafy vegetables, or pasture grass (1.0 for iodines)
λ_{Ei}	:= 0.00219	effective removal rate constant for Mn-54 from crops due to decay and weathering, in hr-1
t_b	:= 131400	soil exposure time to deposition, in (equal to 15 yrs, or mid plant life)
Y_v	:= 2.0	agricultural productivity (yield) for produce, in kg/m-2
B_{iv}	:= $2.9*10^{-2}$	concentration factor for uptake of Mn-54 from soil by edible parts of crops in pCi/kg (wet weight) per pCi/kg dry soil

λ_i	:=	$9.252*10^{-5}$	radioactive decay constant for Mn-54, in hrs-1
P	:=	240	effective surface density of soil, in kg/m^2
t_h	:=	1440	crop holdup time after harvest and before ingestion, in hrs
t_e	:=	1440	crop exposure time to plume, in hrs

Therefore, the concentration of Mn-54 in stored vegetables produced at the location of maximum deposition for a unit activity release is given as:

$$1.14*10^8*\left[\frac{D}{Q}\right]*Q_i*\left[r*\frac{1-e^{-\lambda_{Ei}*t_e}}{Y_v*\lambda_{Ei}}+B_{iv}*\frac{1-e^{-\lambda_i*t_b}}{P*\lambda_i}\right]*e^{-\lambda_i*t_h}=67.379\,16 \qquad \text{pCi/kg}$$

PART C.2: Leafy Vegetable Concentration

For leafy vegetables, the above equation is repeated with the value for t_h, crop holdup time after harvest is changed from 1440 hrs to 24 hrs, i.e.:

t_h	:=	24	crop holdup time after harvest, in hrs.

Therefore the concentration of Mn-54 in leafy vegetables at the maximum deposition point due to a unit activity release is given as:

$$1.14*10^8*\left[\frac{D}{Q}\right]*Q_i*\left[r*\frac{1-e^{-\lambda_{Ei}*t_e}}{Y_v*\lambda_{Ei}}+B_{iv}*\frac{1-e^{-\lambda_i*t_b}}{P*\lambda_i}\right]*e^{-\lambda_i*t_h}=76.81117 \qquad \text{pCi/kg}$$

PART C.3.a: Animal Feed concentration (pasture): C_p

Next, we can repeat the above calculation to determine the concentration of Mn-54 in pasture grass used as animal feed. This will allow for the determination of dose contribution from milk and meat.

For pasture grass, all the above variables remain the same except for:

Y_v	:=	0.70	for agricultural productivity of pasture grasses, kg/m^2
t_e	:=	720	for grass exposure time to plume, hrs
t_h	:=	0.0	for holdup time after harvest

Using these variables in the above equation gives the concentration in pasture grass as:

$$1.14*10^{8}*\left[\frac{D}{Q}\right]*Q_i*\left[r*\frac{1-e^{-\lambda_{Ei}*t_e}}{Y_V*\lambda_{Ei}}+B_{iv}*\frac{1-e^{-\lambda_i*t_b}}{P*\lambda_i}\right]*e^{-\lambda_i*t_h}=179.227\,18 \qquad \text{pCi/kg}$$

PART C.3.b: Animal Feed Concentration (stored feed): C_s

For stored feed that would be given to goats, or meat animals, the average concentration would be calculated by changing the following variables in the above calculation to:

Y_v	:=	2.0	agricultural productivity for stored feed
t_e	:=	1440	feed crop exposure time to plume in hrs
t_h	:=	2160	feed crop holdup time after harvest, hrs

Putting these values back into the above equation gives the concentration in stored animal feed (goat and meat animal) of Mn-54 for a unit activity release to the maximum exposure point.

$$1.14*10^{8}*\left[\frac{D}{Q}\right]*Q_i*\left[r*\frac{1-e^{-\lambda_{Ei}*t_e}}{Y_v*\lambda_{Ei}}+B_{iv}*\frac{1-e^{-\lambda_i*t_b}}{P*\lambda_i}\right]*e^{-\lambda_i*t_h}=63.037\,19 \qquad \text{pCi/kg}$$

PART C.3.c.: Concentration in Goat's Milk: C_m

The Mn-54 concentration in milk is dependent on the amount and contamination level of the feed consumed by the animal. The radionuclide concentration in milk is estimated from RG 1.109 general equation C-10 as:

$$F_m*C_v*Q_F*e^{-\lambda_i*t_f}\,20 = \text{conc. in milk, pCi/liter}$$

where the variables are defined as:

F_m	:=	$2.5*10^{-4}$	average fraction of animal's daily intake of Mn-54 which appears in each liter of milk, in days/liter
Q_F	:=	6.0	amount of feed consumed by a goat per day, in kg/day (50 kg/d for meat)
t_f	:=	2.0	average transport time of activity from feed into milk and to receptor, in days.

λ_i := $2.22*10^{-3}$ decay constant of Mn-54, in days-1

In addition, the C_v term for the concentration of a nuclide in the animal's feed is given from RG 1.109 general equation C-11 as:

$$C_v = f_p * f_s * C_p + [1 - f_p] * C_s + f_p * [1 - f_s] * C_s \quad 21$$

where the following equals:

f_p	:=	0.5	fraction of the year that animals graze on pasture
f_s	:=	1.0	fraction of daily feed that is pasture grass when the animal grazes on pasture
C_p	:=	179.227	concentration of Mn-54 in pasture grass as calculated from above, pCi/kg
C_s	:=	63.037	concentration of Mn-54 in stored feed as calculated from above, in pCi/kg

Therefore, the concentration in the total animal's feed is estimated to be:

$$f_p * f_s * C_p + [1 - f_p] * C_s + f_p * [1 - f_s] * C_s = 121.132 \text{ pCi/kg} \quad 22$$

When this value of 121.132 is put back into the above general equation for nuclide concentration in milk, we get:

[C_v := 121.132 pCi/kg]

and

$$F_m * C_v * Q_F * e^{-\lambda_i * t_f} = 0.181\,23 \text{pCi/liter of Mn-54 in goats milk}$$

PART C.3.d.: <u>Concentration in Meat</u>: C_f

Similar to milk, the concentration of the nuclide in animal meat is calculated. RG 1.109 general equation C-12 is given as:

$$C_f = F_f * C_v * Q_F * e^{-\lambda_i * t_s} \quad 24$$

Here the variables are set as:

F_f	:=	$8.0*10^{-4}$	fraction of animals daily intake of Mn-54 which appears in each kg of flesh, in days/kg
Q_F	:=	50.0	animal's daily feed intake, in kg/day

t_s	:=	20.0	average time from slaughter to consumption, in days
C_v	:=	121.132	concentration on Mn-54 in animal's feed, same as calculated above for goat, in pCi/kg

Therefore, the concentration of Mn-54 in animal meat is calculated to be:

$$F_f * C_v * Q_F * e^{-\lambda_i * t_s} = 4.635\,25 \text{ pCi/kg in meat for Mn-54}$$

PART D: DOSE FROM INGESTION OF FOODS PRODUCED AT MAXIMUM LOCATION

Now that we have calculated the concentration of Mn-54 in milk, meat, leafy vegetables, and stored vegetables produced at a location of maximum air deposition, the resulting dose to any organ j and age group a can be calculated from the following general equation C-13 taken from RG 1.109:

$$\sum_i DFI_{ija} * \left[U_{va} * f_g * C_v + U_{ma} * C_m + U_{Fa} * C_f + U_{La} * f_l * C_L \right] 26$$

For Mn-54 set equal to i, we find that from the evaluation of all organs for all age groups for combination of all exposure pathways, the adults GI-LLI is the critical age group/organ. Therefore, the variables in the above dose equation can be defined as:

DFI_{ija}	:=	$1.40*10^{-5}$	ingestion dose factor for adults/GI-LLI for Mn-54, in mrem/pCi ingested (RG 1.109, Table E-11)
U_{va}	:=	520.0	vegetable ingestion rates for adults, kg/yr
f_g	:=	0.76	fraction of stored vegetables grown in the garden
f_l	:=	1.0	of leafy vegetables grown in the garden
U_{ma}	:=	310.0	milk ingestion rate for adults, liter/yr
U_{Fa}	:=	110.0	meat ingestion rate for adults, kg/yr
U_{La}	:=	64.0	leafy vegetable ingestion rate for adults, kg/yr
C_v	:=	67.379	concentration of Mn-54 in stored vegetables, in pCi/kg (from above)
C_m	:=	0.181	concentration of Mn-54 in milk, in pCi/liter (from above)
C_f	:=	4.635	concentration of Mn-54 in meat, in pCi/kg (from above)

C_L := 76.811 concentration of Mn-54 in leafy vegetables, in pCi/kg (from above)

The dose from the combination of ingestion pathways for this example is calculated by substituting the above listed variables back into the ingestion dose equation:

$$DFI_{ija} * [U_{va} * f_g * C_v + U_{ma} * C_m + U_{Fa} * C_f + U_{La} * f_l * C_L] = 0.449527 \quad \text{mrem-/yr per Ci}$$

By breaking the above dose equation down into the different pathways which combine to give the total ingestion dose, we can see the individual dose contribution made by each exposure pathway.

Therefore, we have:

Dose for ingestion of stored vegetables	$DFI_{ija} * U_{va} * f_g * C_v = 0.373$
Dose for ingestion of goat's milk	$DFI_{ija} * U_{ma} * C_m = 7.855*10^{-4}$
Dose for ingestion of meat	$DFI_{ija} * U_{Fa} * C_f = 0.00714$
Dose for ingestion of leafy vegetables	$DFI_{ija} * U_{La} * f_l * C_L = 0.0688$

PART E: TOTAL DOSE FROM ALL EXPOSURE PATHWAYS

The total dose from all exposure pathways assumed to be present at the maximum receptor location can be found by simply adding the individual pathway doses calculated above. Since all the calculations above assumed a unit activity release from the plant vent stack, the combined dose can be stated as dose factor per unit activity released. This then demonstrates the development of the Seabrook ODCM Method I dose factors for gaseous release of particulates from the vent stack.

Inhalation dose (Part A)	0.00184 mrem/yr per Ci
Ground plane dose (Part B)	0.658 mrem/yr per Ci
Ingestion dose total (Part D)	0.449 mrem/yr per Ci

Total dose all pathways	1.11 mrem/yr per Ci
(critical organ is GI-LLI of an adult for Mn-54)	

APPENDIX B

ANNUAL AVERAGE EFFLUENT CONCENTRATION LIMITS

TAKEN FROM

10 CFR 20, APPENDIX B

Atomic No.	Radionuclide	Class	Table 1 Occupational Values: Col. 1 Oral Ingestion ALI (μCi)	Col. 2 Inhalation ALI (μCi)	Col. 3 Inhalation DAC (μCi/ml)	Table 2 Effluent Concentrations: Col. 1 Air (μCi/ml)	Col. 2 Water (μCi/ml)	Table 3 Releases to Sewers: Monthly Average Concentration (μCi/ml)
1	Hydrogen-3	Water, DAC includes skin absorption	8E+4	8E+4	2E-5	1E-7	1E-3	1E-2
		Gas (HT or T_2)Submersion[1]: Use above values as HT and T_2 oxidize in air and in the body to HTO.						
4	Beryllium-7	W, all compounds except those given for Y	4E+4	2E+4	9E-6	3E-8	6E-4	6E-3
		Y, oxides, halides, and nitrates	-	2E+4	8E-6	3E-8	-	-
4	Beryllium-10	W, see ^{7}Be	1E+3	2E+2	6E-8	2E-10	-	-
			LLI wall (1E+3)	-	-	-	2E-5	2E-4
		Y, see ^{7}Be	-	1E+1	6E-9	2E-11	-	-
6	Carbon-11[2]	Monoxide	-	1E+6	5E-4	2E-6	-	-
		Dioxide	-	6E+5	3E-4	9E-7	-	-
		Compounds	4E+5	4E+5	2E-4	6E-7	6E-3	6E-2
6	Carbon-14	Monoxide	-	2E+6	7E-4	2E-6	-	-
		Dioxide	-	2E+5	9E-5	3E-7	-	-
		Compounds	2E+3	2E+3	1E-6	3E-9	3E-5	3E-4
9	Fluorine-18[2]	D, fluorides of H, Li, Na, K, Rb, Cs, and Fr	5E+4	7E+4	3E-5	1E-7	-	-
			St wall (5E+4)	-	-	-	7E-4	7E-3
		W, fluorides of Be, Mg, Ca, Sr, Ba, Ra, Al, Ga, In, Tl, As, Sb, Bi, Fe, Ru, Os, Co, Ni, Pd, Pt, Cu, Ag, Au, Zn, Cd, Hg, Sc, Y, Ti, Zr, V, Nb, Ta, Mn, Tc, and Re	-	9E+4	4E-5	1E-7	-	-
		Y, lanthanum fluoride	-	8E+4	3E-5	1E-7	-	-
11	Sodium-22	D, all compounds	4E+2	6E+2	3E-7	9E-10	6E-6	6E-5
11	Sodium-24	D, all compounds	4E+3	5E+3	2E-6	7E-9	5E-5	5E-4
12	Magnesium-28	D, all compounds except those given for W	7E+2	2E+3	7E-7	2E-9	9E-6	9E-5
		W, oxides, hydroxides, carbides, halides, and nitrates	-	1E+3	5E-7	2E-9	-	-
13	Aluminum-26	D, all compounds except those given for W	4E+2	6E+1	3E-8	9E-11	6E-6	6E-5
		W, oxides, hydroxides, carbides, halides, and nitrates	-	9E+1	4E-8	1E-10	-	-
14	Silicon-31	D, all compounds except those given for W and Y	9E+3	3E+4	1E-5	4E-8	1E-4	1E-3
		W, oxides, hydroxides, carbides, and nitrates	-	3E+4	1E-5	5E-8	-	-
		Y, aluminosilicate glass	-	3E+4	1E-5	4E-8	-	-
14	Silicon-32	D, see ^{31}Si	2E+3	2E+2	1E-7	3E-10	-	-
			LLI wall (3E+3)	-	-	-	4E-5	4E-4
		W, see ^{31}Si	-	1E+2	5E-8	2E-10	-	-
		Y, see ^{31}Si	-	5E+0	2E-9	7E-12	-	-
15	Phosphorus-32	D, all compounds except phosphates given for W	6E+2	9E+2	4E-7	1E-9	9E-6	9E-5
		W, phosphates of Zn^{2+}, S^{3+}, Mg^{2+}, Fe^{3+}, Bi^{3+}, and lanthanides	-	4E+2	2E-7	5E-10	-	-
15	Phosphorus-33	D, see ^{32}P	6E+3	8E+3	4E-6	1E-8	8E-5	8E-4
		W, see ^{32}P	-	3E+3	1E-6	4E-9	-	-

58 FR 67657

Atomic No.	Radionuclide	Class	Table 1 Occupational Values: Col. 1 Oral Ingestion ALI (μCi)	Col. 2 Inhalation ALI (μCi)	Col. 3 Inhalation DAC (μCi/ml)	Table 2 Effluent Concentrations: Col. 1 Air (μCi/ml)	Col. 2 Water (μCi/ml)	Table 3 Releases to Sewers: Monthly Average Concentration (μCi/ml)
16	Sulfur-35	Vapor	-	1E+4	6E-6	2E-8	-	-
		D, sulfides and sulfates except those given for W	1E+4	2E+4	7E-6	2E-8	-	-
			LLI wall (8E+3)	-	-	-	1E-4	1E-3
		W, elemental sulfur, sulfides of Sr, Ba, Ge, Sn, Pb, As, Sb, Bi, Cu, Ag, Au, Zn, Cd, Hg, W, and Mo. Sulfates of Ca, Sr, Ba, Ra, As, Sb, and Bi	6E+3					
			-	2E+3	9E-7	3E-9	-	-
17	Chlorine-36	D, chlorides of H, Li, Na, K, Rb, Cs, and Fr	2E+3	2E+3	1E-6	3E-9	2E-5	2E-4
		W, chlorides of lanthanides, Be, Mg, Ca, Sr, Ba, Ra, Al, Ga, In, Tl, Ge, Sn, Pb, As, Sb, Bi, Fe, Ru, Os, Co, Rh, Ir, Ni, Pd, Pt, Cu, Ag, Au, Zn, Cd, Hg, Sc, Y, Ti, Zr, Hf, V, Nb, Ta, Cr, Mo, W, Mn, Tc, and Re	-	2E+2	1E-7	3E-10	-	-
17	Chlorine-38[2]	D, see ^{36}Cl	2E+4	4E+4	2E-5	6E-8	-	-
			St. wall (3E+4)	-	-	-	3E-4	3E-3
		W, see ^{36}Cl	-	5E+4	2E-5	6E-8	-	-
17	Chlorine-39[2]	D, see ^{36}Cl	2E+4	5E+4	2E-5	7E-8	-	-
			St. wall (4E+4)	-	-	-	5E-4	5E-3
		W, see ^{36}Cl	-	6E+4	2E-5	8E-8	-	-
18	Argon-37	Submersion[1]	-	-	1E+0	6E-3	-	-
18	Argon-39	Submersion[1]	-	-	2E-4	8E-7	-	-
18	Argon-41	Submersion[1]	-	-	3E-6	1E-8	-	-
19	Potassium-40	D, all compounds	3E+2	4E+2	2E-7	6E-10	4E-6	4E-5
19	Potassium-42	D, all compounds	5E+3	5E+3	2E-6	7E-9	6E-5	6E-4
19	Potassium-43	D, all compounds	6E+3	9E+3	4E-6	1E-8	9E-5	9E-4
19	Potassium-44[2]	D, all compounds	2E+4	7E+4	3E-5	9E-8	-	-
			St. wall (4E+4)	-	-	-	5E-4	5E-3
19	Potassium-45[2]	D, all compounds	3E+4	1E+5	5E-5	2E-7	-	-
			St. wall (5E+4)	-	-	-	7E-4	7E-3
20	Calcium-41	W, all compounds	3E+3	4E+3	2E-6	-	-	-
			Bone surf (4E+3)	Bone surf (4E+3)	-	5E-9	6E-5	6E-4
20	Calcium-45	W, all compounds	2E+3	8E+2	4E-7	1E-9	2E-5	2E-4
20	Calcium-47	W, all compounds	8E+2	9E+2	4E-7	1E-9	1E-5	1E-4
21	Scandium-43	Y, all compounds	7E+3	2E+4	9E-6	3E-8	1E-4	1E-3
21	Scandium-44m	Y, all compounds	5E+2	7E+2	3E-7	1E-9	7E-6	7E-5
21	Scandium-44	Y, all compounds	4E+3	1E+4	5E-6	2E-8	5E-5	5E-4
21	Scandium-46	Y, all compounds	9E+2	2E+2	1E-7	3E-10	1E-5	1E-4
21	Scandium-47	Y, all compounds	2E+3	3E+3	1E-6	4E-9	-	-
			LLI wall (3E+3)	-	-	-	4E-5	4E-4
21	Scandium-48	Y, all compounds	8E+2	1E+3	6E-7	2E-9	1E-5	1E-4
21	Scandium-49[2]	Y, all compounds	2E+4	5E+4	2E-5	8E-8	3E-4	3E-3
22	Titanium-44	D, all compounds except those given for W and Y	3E+2	1E+1	5E-9	2E-11	4E-6	4E-5
		W, oxides, hydroxides, carbides, halides, and nitrates	-	3E+1	1E-8	4E-11	-	-
		Y, $SrTiO_3$	-	6E+0	2E-9	8E-12	-	-

58 FR 67657

58 FR 67657

Atomic No.	Radionuclide	Class	Table 1 Occupational Values: Col. 1 Oral Ingestion ALI (μCi)	Col. 2 Inhalation ALI (μCi)	Col. 3 Inhalation DAC (μCi/ml)	Table 2 Effluent Concentrations: Col. 1 Air (μCi/ml)	Col. 2 Water (μCi/ml)	Table 3 Releases to Sewers: Monthly Average Concentration (μCi/ml)
22	Titanium-45	D, see ^{44}Ti	9E+3	3E+4	1E-5	3E-8	1E-4	1E-3
		W, see ^{44}Ti	-	4E+4	1E-5	5E-8	-	-
		Y, see ^{44}Ti	-	3E+4	1E-5	4E-8	-	-
23	Vanadium-47[2]	D, all compounds except those given for W	3E+4	8E+4	3E-5	1E-7	-	-
			St. wall (3E+4)	-	-	-	4E-4	4E-3
		W, oxides, hydroxides, carbides, and halides	-	1E+5	4E-5	1E-7	-	-
23	Vanadium-48	D, see ^{47}V	6E+2	1E+3	5E-7	2E-9	9E-6	9E-5
		W, see ^{47}V	-	6E+2	3E-7	9E-10	-	-
23	Vanadium-49	D, see ^{47}V	7E+4	3E+4	1E-5	-	-	-
			LLI wall (9E+4)	Bone surf (3E+4)	-	5E-8	1E-3	1E-2
		W, see ^{47}V	-	2E+4	8E-6	2E-8	-	-
24	Chromium-48	D, all compounds except those given for W and Y	6E+3	1E+4	5E-6	2E-8	8E-5	8E-4
		W, halides and nitrates	-	7E+3	3E-6	1E-8	-	-
		Y, oxides and hydroxides	-	7E+3	3E-6	1E-8	-	-
24	Chromium-49[2]	D, see ^{48}Cr	3E+4	8E+4	4E-5	1E-7	4E-4	4E-3
		W, see ^{48}Cr	-	1E+5	4E-5	1E-7	-	-
		Y, see ^{48}Cr	-	9E+4	4E-5	1E-7	-	-
24	Chromium-51	D, see ^{48}Cr	4E+4	5E+4	2E-5	6E-8	5E-4	5E-3
		W, see ^{48}Cr	-	2E+4	1E-5	3E-8	-	-
		Y, see ^{48}Cr	-	2E+4	8E-6	3E-8	-	-
25	Manganese-51[2]	D, all compounds except those given for W	2E+4	5E+4	2E-5	7E-8	3E-4	3E-3
		W, oxides, hydroxides, halides, and nitrates	-	6E+4	3E-5	8E-8	-	-
25	Manganese-52m[2]	D, see ^{51}Mn	3E+4	9E+4	4E-5	1E-7	-	-
			St. wall (4E+4)	-	-	-	5E-4	5E-3
		W, see ^{51}Mn	-	1E+5	4E-5	1E-7	-	-
25	Manganese-52	D, see ^{51}Mn	7E+2	1E+3	5E-7	2E-9	1E-5	1E-4
		W, see ^{51}Mn	-	9E+2	4E-7	1E-9	-	-
25	Manganese-53	D, see ^{51}Mn	5E+4	1E+4	5E-6	-	7E-4	7E-3
			-	Bone surf (2E+4)	-	3E-8	-	-
		W, see ^{51}Mn	-	1E+4	5E-6	2E-8	-	-
25	Manganese-54	D, see ^{51}Mn	2E+3	9E+2	4E-7	1E-9	3E-5	3E-4
		W, see ^{51}Mn	-	8E+2	3E-7	1E-9	-	-
25	Manganese-56	D, see ^{51}Mn	5E+3	2E+4	6E-6	2E-8	7E-5	7E-4
		W, see ^{51}Mn	-	2E+4	9E-6	3E-8	-	-

58 FR 67657

Atomic No.	Radionuclide	Class	Table 1 Occupational Values: Col. 1 Oral Ingestion ALI (μCi)	Col. 2 Inhalation ALI (μCi)	Col. 3 Inhalation DAC (μCi/ml)	Table 2 Effluent Concentrations: Col. 1 Air (μCi/ml)	Col. 2 Water (μCi/ml)	Table 3 Releases to Sewers: Monthly Average Concentration (μCi/ml)
26	Iron-52	D, all compounds except those given for W	9E+2	3E+3	1E-6	4E-9	1E-5	1E-4
		W, oxides, hydroxides, and halides	-	2E+3	1E-6	3E-9	-	-
26	Iron-55	D, see ^{52}Fe	9E+3	2E+3	8E-7	3E-9	1E-4	1E-3
		W, see ^{52}Fe	-	4E+3	2E-6	6E-9	-	-
26	Iron-59	D, see ^{52}Fe	8E+2	3E+2	1E-7	5E-10	1E-5	1E-4
		W, see ^{52}Fe	-	5E+2	2E-7	7E-10	-	-
26	Iron-60	D, see ^{52}Fe	3E+1	6E+0	3E-9	9E-12	4E-7	4E-6
		W, see ^{52}Fe	-	2E+1	8E-9	3E-11	-	-
27	Cobalt-55	W, all compounds except those given for Y	1E+3	3E+3	1E-6	4E-9	2E-5	2E-4
		Y, oxides, hydroxides, halides, and nitrates	-	3E+3	1E-6	4E-9	-	-
27	Cobalt-56	W, see ^{55}Co	5E+2	3E+2	1E-7	4E-10	6E-6	6E-5
		Y, see ^{55}Co	4E+2	2E+2	8E-8	3E-10	-	-
27	Cobalt-57	W, see ^{55}Co	8E+3	3E+3	1E-6	4E-9	6E-5	6E-4
		Y, see ^{55}Co	4E+3	7E+2	3E-7	9E-10	-	-
27	Cobalt-58m	W, see ^{55}Co	6E+4	9E+4	4E-5	1E-7	8E-4	8E-3
		Y, see ^{55}Co	-	6E+4	3E-5	9E-8	-	-
27	Cobalt-58	W, see ^{55}Co	2E+3	1E+3	5E-7	2E-9	2E-5	2E-4
		Y, see ^{55}Co	1E+3	7E+2	3E-7	1E-9	-	-
27	Cobalt-60m[2]	W, see ^{55}Co	1E+6	4E+6	2E-3	6E-6	-	-
			St. wall (1E+6)	-	-	-	2E-2	2E-1
		Y, see ^{55}Co	-	3E+6	1E-3	4E-6	-	-
27	Cobalt-60	W, see ^{55}Co	5E+2	2E+2	7E-8	2E-10	3E-6	3E-5
		Y, see ^{55}Co	2E+2	3E+1	1E-8	5E-11	-	-
27	Cobalt-61[2]	W, see ^{55}Co	2E+4	6E+4	3E-5	9E-8	3E-4	3E-3
		Y, see ^{55}Co	2E+4	6E+4	2E-5	8E-8	-	-
27	Cobalt-62m[2]	W, see ^{55}Co	4E+4	2E+5	7E-5	2E-7	-	-
			St. wall (5E+4)	-	-	-	7E-4	7E-3
		Y, see ^{55}Co	-	2E+5	6E-5	2E-7	-	-
28	Nickel-56	D, all compounds except those given for W	1E+3	2E+3	8E-7	3E-9	2E-5	2E-4
		W, oxides, hydroxides, and carbides	-	1E+3	5E-7	2E-9	-	-
		Vapor	-	1E+3	5E-7	2E-9	-	-
28	Nickel-57	D, see ^{56}Ni	2E+3	5E+3	2E-6	7E-9	2E-5	2E-4
		W, see ^{56}Ni	-	3E+3	1E-6	4E-9	-	-
		Vapor	-	6E+3	3E-6	9E-9	-	-

Atomic No.	Radionuclide	Class	Table 1 Occupational Values Col. 1 Oral Ingestion ALI (μCi)	Col. 2 Inhalation ALI (μCi)	Col. 3 Inhalation DAC (μCi/ml)	Table 2 Effluent Concentrations Col. 1 Air (μCi/ml)	Col. 2 Water (μCi/ml)	Table 3 Releases to Sewers Monthly Average Concentration (μCi/ml)
28	Nickel-59	D, see ^{56}Ni	2E+4	4E+3	2E-6	5E-9	3E-4	3E-3
		W, see ^{56}Ni	-	7E+3	3E-6	1E-8	-	-
		Vapor	-	2E+3	8E-7	3E-9	-	-
28	Nickel-63	D, see ^{56}Ni	9E+3	2E+3	7E-7	2E-9	1E-4	1E-3
		W, see ^{56}Ni	-	3E+3	1E-6	4E-9	-	-
		Vapor	-	8E+2	3E-7	1E-9	-	-
28	Nickel-65	D, see ^{56}Ni	8E+3	2E+4	1E-5	3E-8	1E-4	1E-3
		W, see ^{56}Ni	-	3E+4	1E-5	4E-8	-	-
		Vapor	-	2E+4	7E-6	2E-8	-	-
28	Nickel-66	D, see ^{56}Ni	4E+2	2E+3	7E-7	2E-9	-	-
			LLI wall (5E+2)	-	-	-	6E-6	6E-5
		W, see ^{56}Ni	-	6E+2	3E-7	9E-10	-	-
		Vapor	-	3E+3	1E-6	4E-9	-	-
29	Copper-60[2]	D, all compounds except those given for W and Y	3E+4	9E+4	4E-5	1E-7	-	-
			St. wall (3E+4)	-	-	-	4E-4	4E-3
		W, sulfides, halides, and nitrates	-	1E+5	5E-5	2E-7	-	-
		Y, oxides and hydroxides	-	1E+5	4E-5	1E-7	-	-
29	Copper-61	D, see ^{60}Cu	1E+4	3E+4	1E-5	4E-8	2E-4	2E-3
		W, see ^{60}Cu	-	4E+4	2E-5	6E-8	-	-
		Y, see ^{60}Cu	-	4E+4	1E-5	5E-8	-	-
29	Copper-64	D, see ^{60}Cu	1E+4	3E+4	1E-5	4E-8	2E-4	2E-3
		W, see ^{60}Cu	-	2E+4	1E-5	3E-8	-	-
		Y, see ^{60}Cu	-	2E+4	9E-6	3E-8	-	-
29	Copper-67	D, see ^{60}Cu	5E+3	8E+3	3E-6	1E-8	6E-5	6E-4
		W, see ^{60}Cu	-	5E+3	2E-6	7E-9	-	-
		Y, see ^{60}Cu	-	5E+3	2E-6	6E-9	-	-
30	Zinc-62	Y, all compounds	1E+3	3E+3	1E-6	4E-9	2E-5	2E-4
30	Zinc-63[2]	Y, all compounds	2E+4	7E+4	3E-5	9E-8	-	-
			St. wall (3E+4)	-	-	-	3E-4	3E-3
30	Zinc-65	Y, all compounds	4E+2	3E+2	1E-7	4E-10	5E-6	5E-5
30	Zinc-69m	Y, all compounds	4E+3	7E+3	3E-6	1E-8	6E-5	6E-4
30	Zinc-69[2]	Y, all compounds	6E+4	1E+5	6E-5	2E-7	8E-4	8E-3
30	Zinc-71m	Y, all compounds	6E+3	2E+4	7E-6	2E-8	8E-5	8E-4
30	Zinc-72	Y, all compounds	1E+3	1E+3	5E-7	2E-9	1E-5	1E-4
31	Gallium-65[2]	D, all compounds except those given for W	5E+4	2E+5	7E-5	2E-7	-	-
			St. wall (6E+4)	-	-	-	9E-4	9E-3
		W, oxides, hydroxides, carbides, halides, and nitrates	-	2E+5	8E-5	3E-7	-	-

58 FR 67657

Atomic No.	Radionuclide	Class	Table 1 Occupational Values Col. 1 Oral Ingestion ALI (μCi)	Col. 2 Inhalation ALI (μCi)	Col. 3 Inhalation DAC (μCi/ml)	Table 2 Effluent Concentrations Col. 1 Air (μCi/ml)	Col. 2 Water (μCi/ml)	Table 3 Releases to Sewers Monthly Average Concentration (μCi/ml)
31	Gallium-66	D, see ^{65}Ga	1E+3	4E+3	1E-6	5E-9	1E-5	1E-4
		W, see ^{65}Ga	-	3E+3	1E-6	4E-9	-	-
31	Gallium-67	D, see ^{65}Ga	7E+3	1E+4	6E-6	2E-8	1E-4	1E-3
		W, see ^{65}Ga	-	1E+4	4E-6	1E-8	-	-
31	Gallium-68[2]	D, see ^{65}Ga	2E+4	4E+4	2E-5	6E-8	2E-4	2E-3
		W, see ^{65}Ga	-	5E+4	2E-5	7E-8	-	-
31	Gallium-70[2]	D, see ^{65}Ga	5E+4	2E+5	7E-5	2E-7	-	-
			St. wall (7E+4)	-	-	-	1E-3	1E-2
		W, see ^{65}Ga	-	2E+5	8E-5	3E-7	-	-
31	Gallium-72	D, see ^{65}Ga	1E+3	4E+3	1E-6	5E-9	2E-5	2E-4
		W, see ^{65}Ga	-	3E+3	1E-6	4E-9	-	-
31	Gallium-73	D, see ^{65}Ga	5E+3	2E+4	6E-6	2E-8	7E-5	7E-4
		W, see ^{65}Ga	-	2E+4	6E-6	2E-8	-	-
32	Germanium-66	D, all compounds except those given for W	2E+4	3E+4	1E-5	4E-8	3E-4	3E-3
		W, oxides, sulfides, and halides	-	2E+4	8E-6	3E-8	-	-
32	Germanium-67[2]	D, see ^{66}Ge	3E+4	9E+4	4E-5	1E-7	-	-
			St. wall (4E+4)	-	-	-	6E-4	6E-3
		W, see ^{66}Ge	-	1E+5	4E-5	1E-7	-	-
32	Germanium-68	D, see ^{66}Ge	5E+3	4E+3	2E-6	5E-9	6E-5	6E-4
		W, see ^{66}Ge	-	1E+2	4E-8	1E-10	-	-
32	Germanium-69	D, see ^{66}Ge	1E+4	2E+4	6E-6	2E-8	2E-4	2E-3
		W, see ^{66}Ge	-	8E+3	3E-6	1E-8	-	-
32	Germanium-71	D, see ^{66}Ge	5E+5	4E+5	2E-4	6E-7	7E-3	7E-2
		W, see ^{66}Ge	-	4E+4	2E-5	6E-8	-	-
32	Germanium-75[2]	D, see ^{66}Ge	4E+4	8E+4	3E-5	1E-7	-	-
			St. wall (7E+4)	-	-	-	9E-4	9E-3
		W, see ^{66}Ge	-	8E+4	4E-5	1E-7	-	-
32	Germanium-77	D, see ^{66}Ge	9E+3	1E+4	4E-6	1E-8	1E-4	1E-3
		W, see ^{66}Ge	-	6E+3	2E-6	8E-9	-	-
32	Germanium-78[2]	D, see ^{66}Ge	2E+4	2E+4	9E-6	3E-8	-	-
			St. wall (2E+4)	-	-	-	3E-4	3E-3
		W, see ^{66}Ge	-	2E+4	9E-6	3E-8	-	-

58 FR 67657

58 FR 67657

Atomic No.	Radionuclide	Class	Table 1 Occupational Values: Col. 1 Oral Ingestion ALI (μCi)	Col. 2 Inhalation ALI (μCi)	Col. 3 Inhalation DAC (μCi/ml)	Table 2 Effluent Concentrations: Col. 1 Air (μCi/ml)	Col. 2 Water (μCi/ml)	Table 3 Releases to Sewers: Monthly Average Concentration (μCi/ml)
33	Arsenic-69[2]	W, all compounds	3E+4	1E+5	5E-5	2E-7	-	-
			St. wall (4E+4)	-	-	-	6E-4	6E-3
33	Arsenic-70[2]	W, all compounds	1E+4	5E+4	2E-5	7E-8	2E-4	2E-3
33	Arsenic-71	W, all compounds	4E+3	5E+3	2E-6	6E-9	5E-5	5E-4
33	Arsenic-72	W, all compounds	9E+2	1E+3	6E-7	2E-9	1E-5	1E-4
33	Arsenic-73	W, all compounds	8E+3	2E+3	7E-7	2E-9	1E-4	1E-3
33	Arsenic-74	W, all compounds	1E+3	8E+2	3E-7	1E-9	2E-5	2E-4
33	Arsenic-76	W, all compounds	1E+3	1E+3	6E-7	2E-9	1E-5	1E-4
33	Arsenic-77	W, all compounds	4E+3	5E+3	2E-6	7E-9	-	-
			LLI wall (5E+3)	-	-	-	6E-5	6E-4
33	Arsenic-78[2]	W, all compounds	8E+3	2E+4	9E-6	3E-8	1E-4	1E-3
34	Selenium-70[2]	D, all compounds except those given for W	2E+4	4E+4	2E-5	5E-8	1E-4	1E-3
		W, oxides, hydroxides, carbides, and elemental Se	1E+4	4E+4	2E-5	6E-8	-	-
34	Selenium-73m[2]	D, see ^{70}Se	6E+4	2E+5	6E-5	2E-7	4E-4	4E-3
		W, see ^{70}Se	3E+4	1E+5	6E-5	2E-7	-	-
34	Selenium-73	D, see ^{70}Se	3E+3	1E+4	5E-6	2E-8	4E-5	4E-4
		W, see ^{70}Se	-	2E+4	7E-6	2E-8	-	-
34	Selenium-75	D, see ^{70}Se	5E+2	7E+2	3E-7	1E-9	7E-6	7E-5
		W, see ^{70}Se	-	6E+2	3E-7	8E-10	-	-
34	Selenium-79	D, see ^{70}Se	6E+2	8E+2	3E-7	1E-9	8E-6	8E-5
		W, see ^{70}Se	-	6E+2	2E-7	8E-10	-	-
34	Selenium-81m[2]	D, see ^{70}Se	4E+4	7E+4	3E-5	9E-8	3E-4	3E-3
		W, see ^{70}Se	2E+4	7E+4	3E-5	1E-7	-	-
34	Selenium-81[2]	D, see ^{70}Se	6E+4	2E+5	9E-5	3E-7	-	-
			St. wall (8E+4)	-	-	-	1E-3	1E-2
		W, see ^{70}Se	-	2E+5	1E-4	3E-7	-	-
34	Selenium-83[2]	D, see ^{70}Se	4E+4	1E+5	5E-5	2E-7	4E-4	4E-3
		W, see ^{70}Se	3E+4	1E+5	5E-5	2E-7	-	-

58 FR 67657

Atomic No.	Radionuclide	Class	Table 1 Occupational Values Col. 1 Oral Ingestion ALI (μCi)	Col. 2 Inhalation ALI (μCi)	Col. 3 Inhalation DAC (μCi/ml)	Table 2 Effluent Concentrations Col. 1 Air (μCi/ml)	Col. 2 Water (μCi/ml)	Table 3 Releases to Sewers Monthly Average Concentration (μCi/ml)
35	Bromine-74m[2]	D, bromides of H, Li, Na, K, Rb, Cs, and Fr	1E+4	4E+4	2E-5	5E-8	-	-
			St. wall (2E+4)	-	-	-	3E-4	3E-3
		W, bromides of lanthanides, Be, Mg, Ca, Sr, Ba, Ra, Al, Ga, In, Tl, Ge, Sn, Pb, As, Sb, Bi, Fe, Ru, Os, Co, Rh, Ir, Ni, Pd, Pt, Cu, Ag, Au, Zn, Cd, Hg, Sc, Y, Ti, Zr, Hf, V, Nb, Ta, Mn, Tc, and Re	-	4E+4	2E-5	6E-8	-	-
35	Bromine-74[2]	D, see ^{74m}Br	2E+4	7E+4	3E-5	1E-7	-	-
			St. wall (4E+4)	-	-	-	5E-4	5E-3
		W, see ^{74m}Br	-	8E+4	4E-5	1E-7	-	-
35	Bromine-75[2]	D, see ^{74m}Br	3E+4	5E+4	2E-5	7E-8	-	-
			St. wall (4E+4)	-	-	-	5E-4	5E-3
		W, see ^{74m}Br	-	5E+4	2E-5	7E-8	-	-
35	Bromine-76	D, see ^{74m}Br	4E+3	5E+3	2E-6	7E-9	5E-5	5E-4
		W, see ^{74m}Br	-	4E+3	2E-6	6E-9	-	-
35	Bromine-77	D, see ^{74m}Br	2E+4	2E+4	1E-5	3E-8	2E-4	2E-3
		W, see ^{74m}Br	-	2E+4	8E-6	3E-8	-	-
35	Bromine-80m	D, see ^{74m}Br	2E+4	2E+4	7E-6	2E-8	3E-4	3E-3
		W, see ^{74m}Br	-	1E+4	6E-6	2E-8	-	-
35	Bromine-80[2]	D, see ^{74m}Br	5E+4	2E+5	8E-5	3E-7	-	-
			St. wall (9E+4)	-	-	-	1E-3	1E-2
		W, see ^{74m}Br	-	2E+5	9E-5	3E-7	-	-
35	Bromine-82	D, see ^{74m}Br	3E+3	4E+3	2E-6	6E-9	4E-5	4E-4
		W, see ^{74m}Br	-	4E+3	2E-6	5E-9	-	-
35	Bromine-83	D, see ^{74m}Br	5E+4	6E+4	3E-5	9E-8	-	-
			St. wall (7E+4)	-	-	-	9E-4	9E-3
		W, see ^{74m}Br	-	6E+4	3E-5	9E-8	-	-
35	Bromine-84[2]	D, see ^{74m}Br	2E+4	6E+4	2E-5	8E-8	-	-
			St. wall (3E+4)	-	-	-	4E-4	4E-3
		W, see ^{74m}Br	-	6E+4	3E-5	9E-8	-	-
36	Krypton-74[2]	Submersion[1]	-	-	3E-6	1E-8	-	-
36	Krypton-76	Submersion[1]	-	-	9E-6	4E-8	-	-
36	Krypton-77[2]	Submersion[1]	-	-	4E-6	2E-8	-	-
36	Krypton-79	Submersion[1]	-	-	2E-5	7E-8	-	-
36	Krypton-81	Submersion[1]	-	-	7E-4	3E-6	-	-

58 FR 67657

Atomic No.	Radionuclide	Class	Table 1 Occupational Values: Col. 1 Oral Ingestion ALI (μCi)	Col. 2 Inhalation ALI (μCi)	Col. 3 Inhalation DAC (μCi/ml)	Table 2 Effluent Concentrations: Col. 1 Air (μCi/ml)	Col. 2 Water (μCi/ml)	Table 3 Releases to Sewers: Monthly Average Concentration (μCi/ml)
36	Krypton-83m[2]	Submersion[1]	-	-	1E-2	5E-5	-	-
36	Krypton-85m	Submersion[1]	-	-	2E-5	1E-7	-	-
36	Krypton-85	Submersion[1]	-	-	1E-4	7E-7	-	-
36	Krypton-87[2]	Submersion[1]	-	-	5E-6	2E-8	-	-
36	Krypton-88	Submersion[1]	-	-	2E-6	9E-9	-	-
37	Rubidium-79[2]	D, all compounds	4E+4	1E+5	5E-5	2E-7	-	-
			St. wall (6E+4)	-	-	-	8E-4	8E-3
37	Rubidium-81m[2]	D, all compounds	2E+5	3E+5	1E-4	5E-7	-	-
			St. wall (3E+5)	-	-	-	4E-3	4E-2
37	Rubidium-81	D, all compounds	4E+4	5E+4	2E-5	7E-8	5E-4	5E-3
37	Rubidium-82m	D, all compounds	1E+4	2E+4	7E-6	2E-8	2E-4	2E-3
37	Rubidium-83	D, all compounds	6E+2	1E+3	4E-7	1E-9	9E-6	9E-5
37	Rubidium-84	D, all compounds	5E+2	8E+2	3E-7	1E-9	7E-6	7E-5
37	Rubidium-86	D, all compounds	5E+2	8E+2	3E-7	1E-9	7E-6	7E-5
37	Rubidium-87	D, all compounds	1E+3	2E+3	6E-7	2E-9	1E-5	1E-4
37	Rubidium-88[2]	D, all compounds	2E+4	6E+4	3E-5	9E-8	-	-
			St. wall (3E+4)	-	-	-	4E-4	4E-3
37	Rubidium-89[2]	D, all compounds	4E+4	1E+5	6E-5	2E-7	-	-
			St. wall (6E+4)	-	-	-	9E-4	9E-3
38	Strontium-80[2]	D, all soluble compounds except $SrTiO_3$	4E+3	1E+4	5E-6	2E-8	6E-5	6E-4
		Y, all insoluble compounds and $SrTiO_3$	-	1E+4	5E-6	2E-8	-	-
38	Strontium-81[2]	D, see ^{80}Sr	3E+4	8E+4	3E-5	1E-7	3E-4	3E-3
		Y, see ^{80}Sr	2E+4	8E+4	3E-5	1E-7	-	-
38	Strontium-82	D, see ^{80}Sr	3E+2	4E+2	2E-7	6E-10	-	-
			LLI wall (2E+2)	-	-	-	3E-6	3E-5
		Y, see ^{80}Sr	2E+2	9E+1	4E-8	1E-10	-	-
38	Strontium-83	D, see ^{80}Sr	3E+3	7E+3	3E-6	1E-8	3E-5	3E-4
		Y, see ^{80}Sr	2E+3	4E+3	1E-6	5E-9	-	-
38	Strontium-85m[2]	D, see ^{80}Sr	2E+5	6E+5	3E-4	9E-7	3E-3	3E-2
		Y, see ^{80}Sr	-	8E+5	4E-4	1E-6	-	-
38	Strontium-85	D, see ^{80}Sr	3E+3	3E+3	1E-6	4E-9	4E-5	4E-4
		Y, see ^{80}Sr	-	2E+3	6E-7	2E-9	-	-
38	Strontium-87m	D, see ^{80}Sr	5E+4	1E+5	5E-5	2E-7	6E-4	6E-3
		Y, see ^{80}Sr	4E+4	2E+5	6E-5	2E-7	-	-

58 FR 67657

Atomic No.	Radionuclide	Class	Table 1 Occupational Values: Col. 1 Oral Ingestion ALI (μCi)	Table 1 Occupational Values: Col. 2 Inhalation ALI (μCi)	Table 1 Occupational Values: Col. 3 Inhalation DAC (μCi/ml)	Table 2 Effluent Concentrations: Col. 1 Air (μCi/ml)	Table 2 Effluent Concentrations: Col. 2 Water (μCi/ml)	Table 3 Releases to Sewers: Monthly Average Concentration (μCi/ml)
38	Strontium-89	D, see ^{80}Sr	6E+2	8E+2	4E-7	1E-9	-	-
			LLI wall (6E+2)	-	-	-	8E-6	8E-5
		Y, see ^{80}Sr	5E+2	1E+2	6E-8	2E-10	-	-
38	Strontium-90	D, see ^{80}Sr	3E+1	2E+1	8E-9	-	-	-
			Bone surf (4E+1)	Bone surf (2E+1)	-	3E-11	5E-7	5E-6
		Y, see ^{80}Sr	-	4E+0	2E-9	6E-12	-	-
38	Strontium-91	D, see ^{80}Sr	2E+3	6E+3	2E-6	8E-9	2E-5	2E-4
		Y, see ^{80}Sr	-	4E+3	1E-6	5E-9	-	-
38	Strontium-92	D, see ^{80}Sr	3E+3	9E+3	4E-6	1E-8	4E-5	4E-4
		Y, see ^{80}Sr	-	7E+3	3E-6	9E-9	-	-
39	Yttrium-86m[2]	W, all compounds except those given for Y	2E+4	6E+4	2E-5	8E-8	3E-4	3E-3
		Y, oxides and hydroxides	-	5E+4	2E-5	8E-8	-	-
39	Yttrium-86	W, see ^{86m}Y	1E+3	3E+3	1E-6	5E-9	2E-5	2E-4
		Y, see ^{86m}Y	-	3E+3	1E-6	5E-9	-	-
39	Yttrium-87	W, see ^{86m}Y	2E+3	3E+3	1E-6	5E-9	3E-5	3E-4
		Y, see ^{86m}Y	-	3E+3	1E-6	5E-9	-	-
39	Yttrium-88	W, see ^{86m}Y	1E+3	3E+2	1E-7	3E-10	1E-5	1E-4
		Y, see ^{86m}Y	-	2E+2	1E-7	3E-10	-	-
39	Yttrium-90m	W, see ^{86m}Y	8E+3	1E+4	5E-6	2E-8	1E-4	1E-3
		Y, see ^{86m}Y	-	1E+4	5E-6	2E-8	-	-
39	Yttrium-90	W, see ^{86m}Y	4E+2	7E+2	3E-7	9E-10	-	-
			LLI wall (5E+2)	-	-	-	7E-6	7E-5
		Y, see ^{86m}Y	-	6E+2	3E-7	9E-10	-	-
39	Yttrium-91m[2]	W, see ^{86m}Y	1E+5	2E+5	1E-4	3E-7	2E-3	2E-2
		Y, see ^{86m}Y	-	2E+5	7E-5	2E-7	-	-
39	Yttrium-91	W, see ^{86m}Y	5E+2	2E+2	7E-8	2E-10	-	-
			LLI wall (6E+2)	-	-	-	8E-6	8E-5
		Y, see ^{86m}Y	-	1E+2	5E-8	2E-10	-	-
39	Yttrium-92	W, see ^{86m}Y	3E+3	9E+3	4E-6	1E-8	4E-5	4E-4
		Y, see ^{86m}Y	-	8E+3	3E-6	1E-8	-	-
39	Yttrium-93	W, see ^{86m}Y	1E+3	3E+3	1E-6	4E-9	2E-5	2E-4
		Y, see ^{86m}Y	-	2E+3	1E-6	3E-9	-	-
39	Yttrium-94[2]	W, see ^{86m}Y	2E+4	8E+4	3E-5	1E-7	-	-
			St. wall (3E+4)	-	-	-	4E-4	4E-3
		Y, see ^{86m}Y	-	8E+4	3E-5	1E-7	-	-
39	Yttrium-95[2]	W, see ^{86m}Y	4E+4	2E+5	6E-5	2E-7	-	-
			St. wall (5E+4)	-	-	-	7E-4	7E-3
		Y, see ^{86m}Y	-	1E+5	6E-5	2E-7	-	-

58 FR 67657

Atomic No.	Radionuclide	Class	Table 1 Occupational Values: Col. 1 Oral Ingestion ALI (μCi)	Table 1: Col. 2 Inhalation ALI (μCi)	Table 1: Col. 3 Inhalation DAC (μCi/ml)	Table 2 Effluent Concentrations: Col. 1 Air (μCi/ml)	Table 2: Col. 2 Water (μCi/ml)	Table 3 Releases to Sewers: Monthly Average Concentration (μCi/ml)
40	Zirconium-86	D, all compounds except those given for W and Y	1E+3	4E+3	2E-6	6E-9	2E-5	2E-4
		W, oxides, hydroxides, halides, and nitrates	-	3E+3	1E-6	4E-9	-	-
		Y, carbide	-	2E+3	1E-6	3E-9	-	-
40	Zirconium-88	D, see ^{86}Zr	4E+3	2E+2	9E-8	3E-10	5E-5	5E-4
		W, see ^{86}Zr	-	5E+2	2E-7	7E-10	-	-
		Y, see ^{86}Zr	-	3E+2	1E-7	4E-10	-	-
40	Zirconium-89	D, see ^{86}Zr	2E+3	4E+3	1E-6	5E-9	2E-5	2E-4
		W, see ^{86}Zr	-	2E+3	1E-6	3E-9	-	-
		Y, see ^{86}Zr	-	2E+3	1E-6	3E-9	-	-
40	Zirconium-93	D, see ^{86}Zr	1E+3	6E+0	3E-9	-	-	-
			Bone surf (3E+3)	Bone surf (2E+1)	-	2E-11	4E-5	4E-4
		W, see ^{86}Zr	-	2E+1	1E-8	-	-	-
			-	Bone surf (6E+1)	-	9E-11	-	-
		Y, see ^{86}Zr	-	6E+1	2E-8	-	-	-
			-	Bone surf (7E+1)	-	9E-11	-	-
40	Zirconium-95	D, see ^{86}Zr	1E+3	1E+2	5E-8	-	2E-5	2E-4
			-	Bone surf (3E+2)	-	4E-10	-	-
		W, see ^{86}Zr	-	4E+2	2E-7	5E-10	-	-
		Y, see ^{86}Zr	-	3E+2	1E-7	4E-10	-	-
40	Zirconium-97	D, see ^{86}Zr	6E+2	2E+3	8E-7	3E-9	9E-6	9E-5
		W, see ^{86}Zr	-	1E+3	6E-7	2E-9	-	-
		Y, see ^{86}Zr	-	1E+3	5E-7	2E-9	-	-
41	Niobium-88[2]	W, all compounds except those given for Y	5E+4	2E+5	9E-5	3E-7	-	-
			St. wall (7E+4)	-	-	-	1E-3	1E-2
		Y, oxides and hydroxides	-	2E+5	9E-5	3E-7	-	-
41	Niobium-89m[2] (66 min)	W, see ^{88}Nb	1E+4	4E+4	2E-5	6E-8	1E-4	1E-3
		Y, see ^{88}Nb	-	4E+4	2E-5	5E-8	-	-
41	Niobium-89 (122 min)	W, see ^{88}Nb	5E+3	2E+4	8E-6	3E-8	7E-5	7E-4
		Y, see ^{88}Nb	-	2E+4	6E-6	2E-8	-	-
41	Niobium-90	W, see ^{88}Nb	1E+3	3E+3	1E-6	4E-9	1E-5	1E-4
		Y, see ^{88}Nb	-	2E+3	1E-6	3E-9	-	-
41	Niobium-93m	W, see ^{88}Nb	9E+3	2E+3	8E-7	3E-9	-	-
			LLI wall (1E+4)	-	-	-	2E-4	2E-3
		Y, see ^{88}Nb	-	2E+2	7E-8	2E-10	-	-
41	Niobium-94	W, see ^{88}Nb	9E+2	2E+2	8E-8	3E-10	1E-5	1E-4
		Y, see ^{88}Nb	-	2E+1	6E-9	2E-11	-	-
41	Niobium-95m	W, see ^{88}Nb	2E+3	3E+3	1E-6	4E-9	-	-
			LLI wall (2E+3)	-	-	-	3E-5	3E-4
		Y, see ^{88}Nb	-	2E+3	9E-7	3E-9	-	-

Atomic No.	Radionuclide	Class	Table 1 Occupational Values Col. 1 Oral Ingestion ALI (μCi)	Col. 2 Inhalation ALI (μCi)	Col. 3 Inhalation DAC (μCi/ml)	Table 2 Effluent Concentrations Col. 1 Air (μCi/ml)	Col. 2 Water (μCi/ml)	Table 3 Releases to Sewers Monthly Average Concentration (μCi/ml)
41	Niobium-95	W, see ^{88}Nb	2E+3	1E+3	5E-7	2E-9	3E-5	3E-4
		Y, see ^{88}Nb	-	1E+3	5E-7	2E-9	-	-
41	Niobium-96	W, see ^{88}Nb	1E+3	3E+3	1E-6	4E-9	2E-5	2E-4
		Y, see ^{88}Nb	-	2E+3	1E-6	3E-9	-	-
41	Niobium-97[2]	W, see ^{88}Nb	2E+4	8E+4	3E-5	1E-7	3E-4	3E-3
		Y, see ^{88}Nb	-	7E+4	3E-5	1E-7	-	-
41	Niobium-98[2]	W, see ^{88}Nb	1E+4	5E+4	2E-5	8E-8	2E-4	2E-3
		Y, see ^{88}Nb	-	5E+4	2E-5	7E-8	-	-
42	Molybdenum-90	D, all compounds except those given for Y	4E+3	7E+3	3E-6	1E-8	3E-5	3E-4
		Y, oxides, hydroxides, and MoS_2	2E+3	5E+3	2E-6	6E-9	-	-
42	Molybdenum-93m	D, see ^{90}Mo	9E+3	2E+4	7E-6	2E-8	6E-5	6E-4
		Y, see ^{90}Mo	4E+3	1E+4	6E-6	2E-8	-	-
42	Molybdenum-93	D, see ^{90}Mo	4E+3	5E+3	2E-6	8E-9	5E-5	5E-4
		Y, see ^{90}Mo	2E+4	2E+2	8E-8	2E-10	-	-
42	Molybdenum-99	D, see ^{90}Mo	2E+3	3E+3	1E-6	4E-9	-	-
			LLI wall (1E+3)	-	-	-	2E-5	2E-4
		Y, see ^{90}Mo	1E+3	1E+3	6E-7	2E-9	-	-
42	Molybdenum-101[2]	D, see ^{90}Mo	4E+4	1E+5	6E-5	2E-7	-	-
			St. wall (5E+4)	-	-	-	7E-4	7E-3
		Y, see ^{90}Mo	-	1E+5	6E-5	2E-7	-	-
43	Technetium-93m[2]	D, all compounds except those given for W	7E+4	2E+5	6E-5	2E-7	1E-3	1E-2
		W, oxides, hydroxides, halides, and nitrates	-	3E+5	1E-4	4E-7	-	-
43	Technetium-93	D, see ^{93m}Tc	3E+4	7E+4	3E-5	1E-7	4E-4	4E-3
		W, see ^{93m}Tc	-	1E+5	4E-5	1E-7	-	-
43	Technetium-94m[2]	D, see ^{93m}Tc	2E+4	4E+4	2E-5	6E-8	3E-4	3E-3
		W, see ^{93m}Tc	-	6E+4	2E-5	8E-8	-	-
43	Technetium-94	D, see ^{93m}Tc	9E+3	2E+4	8E-6	3E-8	1E-4	1E-3
		W, see ^{93m}Tc	-	2E+4	1E-5	3E-8	-	-
43	Technetium-95m	D, see ^{93m}Tc	4E+3	5E+3	2E-6	8E-9	5E-5	5E-4
		W, see ^{93m}Tc	-	2E+3	8E-7	3E-9	-	-
43	Technetium-95	D, see ^{93m}Tc	1E+4	2E+4	9E-6	3E-8	1E-4	1E-3
		W, see ^{93m}Tc	-	2E+4	8E-6	3E-8	-	-
43	Technetium-96m[2]	D, see ^{93m}Tc	2E+5	3E+5	1E-4	4E-7	2E-3	2E-2
		W, see ^{93m}Tc	-	2E+5	1E-4	3E-7	-	-
43	Technetium-96	D, see ^{93m}Tc	2E+3	3E+3	1E-6	5E-9	3E-5	3E-4
		W, see ^{93m}Tc	-	2E+3	9E-7	3E-9	-	-
43	Technetium-97m	D, see ^{93m}Tc	5E+3	7E+3	3E-6	-	6E-5	6E-4
			-	St. wall (7E+3)	-	1E-8	-	-
		W, see ^{93m}Tc	-	1E+3	5E-7	2E-9	-	-

58 FR 67657

58 FR 67657

Atomic No.	Radionuclide	Class	Table 1 Occupational Values: Col. 1 Oral Ingestion ALI (μCi)	Table 1: Col. 2 Inhalation ALI (μCi)	Table 1: Col. 3 Inhalation DAC (μCi/ml)	Table 2 Effluent Concentrations: Col. 1 Air (μCi/ml)	Table 2: Col. 2 Water (μCi/ml)	Table 3 Releases to Sewers: Monthly Average Concentration (μCi/ml)
43	Technetium-97	D, see ^{93m}Tc	4E+4	5E+4	2E-5	7E-8	5E-4	5E-3
		W, see ^{93m}Tc	-	6E+3	2E-6	8E-9	-	-
43	Technetium-98	D, see ^{93m}Tc	1E+3	2E+3	7E-7	2E-9	1E-5	1E-4
		W, see ^{93m}Tc	-	3E+2	1E-7	4E-10	-	-
43	Technetium-99m	D, see ^{93m}Tc	8E+4	2E+5	6E-5	2E-7	1E-3	1E-2
		W, see ^{93m}Tc	-	2E+5	1E-4	3E-7	-	-
43	Technetium-99	D, see ^{93m}Tc	4E+3	5E+3	2E-6	-	6E-5	6E-4
			-	St. wall (6E+3)	-	8E-9	-	-
		W, see ^{93m}Tc	-	7E+2	3E-7	9E-10	-	-
43	Technetium-101[2]	D, see ^{93m}Tc	9E+4	3E+5	1E-4	5E-7	-	-
			St. wall (1E+5)	-	-	-	2E-3	2E-2
		W, see ^{93m}Tc	-	4E+5	2E-4	5E-7	-	-
43	Technetium-104[2]	D, see ^{93m}Tc	2E+4	7E+4	3E-5	1E-7	-	-
			St. wall (3E+4)	-	-	-	4E-4	4E-3
		W, see ^{93m}Tc	-	9E+4	4E-5	1E-7	-	-
44	Ruthenium-94[2]	D, all compounds except those given for W and Y	2E+4	4E+4	2E-5	6E-8	2E-4	2E-3
		W, halides	-	6E+4	3E-5	9E-8	-	-
		Y, oxides and hydroxides	-	6E+4	2E-5	8E-8	-	-
44	Ruthenium-97	D, see ^{94}Ru	8E+3	2E+4	8E-6	3E-8	1E-4	1E-3
		W, see ^{94}Ru	-	1E+4	5E-6	2E-8	-	-
		Y, see ^{94}Ru	-	1E+4	5E-6	2E-8	-	-
44	Ruthenium-103	D, see ^{94}Ru	2E+3	2E+3	7E-7	2E-9	3E-5	3E-4
		W, see ^{94}Ru	-	1E+3	4E-7	1E-9	-	-
		Y, see ^{94}Ru	-	6E+2	3E-7	9E-10	-	-
44	Ruthenium-105	D, see ^{94}Ru	5E+3	1E+4	6E-6	2E-8	7E-5	7E-4
		W, see ^{94}Ru	-	1E+4	6E-6	2E-8	-	-
		Y, see ^{94}Ru	-	1E+4	5E-6	2E-8	-	-
44	Ruthenium-106	D, see ^{94}Ru	2E+2	9E+1	4E-8	1E-10	-	-
			LLI wall (2E+2)	-	-	-	3E-6	3E-5
		W, see ^{94}Ru	-	5E+1	2E-8	8E-11	-	-
		Y, see ^{94}Ru	-	1E+1	5E-9	2E-11	-	-
45	Rhodium-99m	D, all compounds except those given for W and Y	2E+4	6E+4	2E-5	8E-8	2E-4	2E-3
		W, halides	-	8E+4	3E-5	1E-7	-	-
		Y, oxides and hydroxides	-	7E+4	3E-5	9E-8	-	-
45	Rhodium-99	D, see ^{99m}Rh	2E+3	3E+3	1E-6	4E-9	3E-5	3E-4
		W, see ^{99m}Rh	-	2E+3	9E-7	3E-9	-	-
		Y, see ^{99m}Rh	-	2E+3	8E-7	3E-9	-	-

Atomic No.	Radionuclide	Class	Table 1 Occupational Values Col. 1 Oral Ingestion ALI (μCi)	Col. 2 Inhalation ALI (μCi)	Col. 3 Inhalation DAC (μCi/ml)	Table 2 Effluent Concentrations Col. 1 Air (μCi/ml)	Col. 2 Water (μCi/ml)	Table 3 Releases to Sewers Monthly Average Concentration (μCi/ml)
45	Rhodium-100	D, see ^{99m}Rh	2E+3	5E+3	2E-6	7E-9	2E-5	2E-4
		W, see ^{99m}Rh	-	4E+3	2E-6	6E-9	-	-
		Y, see ^{99m}Rh	-	4E+3	2E-6	5E-9	-	-
45	Rhodium-101m	D, see ^{99m}Rh	6E+3	1E+4	5E-6	2E-8	8E-5	8E-4
		W, see ^{99m}Rh	-	8E+3	4E-6	1E-8	-	-
		Y, see ^{99m}Rh	-	8E+3	3E-6	1E-8	-	-
45	Rhodium-101	D, see ^{99m}Rh	2E+3	5E+2	2E-7	7E-10	3E-5	3E-4
		W, see ^{99m}Rh	-	8E+2	3E-7	1E-9	-	-
		Y, see ^{99m}Rh	-	2E+2	6E-8	2E-10	-	-
45	Rhodium-102m	D, see ^{99m}Rh	1E+3	5E+2	2E-7	7E-10	-	-
			LLI wall (1E+3)	-	-	-	2E-5	2E-4
		W, see ^{99m}Rh	-	4E+2	2E-7	5E-10	-	-
		Y, see ^{99m}Rh	-	1E+2	5E-8	2E-10	-	-
45	Rhodium-102	D, see ^{99m}Rh	6E+2	9E+1	4E-8	1E-10	8E-6	8E-5
		W, see ^{99m}Rh	-	2E+2	7E-8	2E-10	-	-
		Y, see ^{99m}Rh	-	6E+1	2E-8	8E-11	-	-
45	Rhodium-103m[2]	D, see ^{99m}Rh	4E+5	1E+6	5E-4	2E-6	6E-3	6E-2
		W, see ^{99m}Rh	-	1E+6	5E-4	2E-6	-	-
		Y, see ^{99m}Rh	-	1E+6	5E-4	2E-6	-	-
45	Rhodium-105	D, see ^{99m}Rh	4E+3	1E+4	5E-6	2E-8	-	-
			LLI wall (4E+3)	-	-	-	5E-5	5E-4
		W, see ^{99m}Rh	-	6E+3	3E-6	9E-9	-	-
		Y, see ^{99m}Rh	-	6E+3	2E-6	8E-9	-	-
45	Rhodium-106m	D, see ^{99m}Rh	8E+3	3E+4	1E-5	4E-8	1E-4	1E-3
		W, see ^{99m}Rh	-	4E+4	2E-5	5E-8	-	-
		Y, see ^{99m}Rh	-	4E+4	1E-5	5E-8	-	-
45	Rhodium-107[2]	D, see ^{99m}Rh	7E+4	2E+5	1E-4	3E-7	-	-
			St. wall (9E+4)	-	-	-	1E-3	1E-2
		W, see ^{99m}Rh	-	3E+5	1E-4	4E-7	-	-
		Y, see ^{99m}Rh	-	3E+5	1E-4	3E-7	-	-
46	Palladium-100	D, all compounds except those given for W and Y	1E+3	1E+3	6E-7	2E-9	2E-5	2E-4
		W, nitrates	-	1E+3	5E-7	2E-9	-	-
		Y, oxides and hydroxides	-	1E+3	6E-7	2E-9	-	-
46	Palladium-101	D, see ^{100}Pd	1E+4	3E+4	1E-5	5E-8	2E-4	2E-3
		W, see ^{100}Pd	-	3E+4	1E-5	5E-8	-	-
		Y, see ^{100}Pd	-	3E+4	1E-5	4E-8	-	-
46	Palladium-103	D, see ^{100}Pd	6E+3	6E+3	3E-6	9E-9	-	-
			LLI wall (7E+3)	-	-	-	1E-4	1E-3
		W, see ^{100}Pd	-	4E+3	2E-6	6E-9	-	-
		Y, see ^{100}Pd	-	4E+3	1E-6	5E-9	-	-
46	Palladium-107	D, see ^{100}Pd	3E+4	2E+4	9E-6	-	-	-
			LLI wall (4E+4)	Kidneys (2E+4)	-	3E-8	5E-4	5E-3
		W, see ^{100}Pd	-	7E+3	3E-6	1E-8	-	-
		Y, see ^{100}Pd	-	4E+2	2E-7	6E-10	-	-

58 FR 67657

58 FR 67657

Atomic No.	Radionuclide	Class	Table 1 Occupational Values: Col. 1 Oral Ingestion ALI (μCi)	Table 1: Col. 2 Inhalation ALI (μCi)	Table 1: Col. 3 Inhalation DAC (μCi/ml)	Table 2 Effluent Concentrations: Col. 1 Air (μCi/ml)	Table 2: Col. 2 Water (μCi/ml)	Table 3 Releases to Sewers: Monthly Average Concentration (μCi/ml)
46	Palladium-109	D, see ^{100}Pd	2E+3	6E+3	3E-6	9E-9	3E-5	3E-4
		W, see ^{100}Pd	-	5E+3	2E-6	8E-9	-	-
		Y, see ^{100}Pd	-	5E+3	2E-6	6E-9	-	-
47	Silver-102[2]	D, all compounds except those given for W and Y	5E+4	2E+5	8E-5	2E-7	-	-
			St. wall (6E+4)	-	-	-	9E-4	9E-3
		W, nitrates and sulfides	-	2E+5	9E-5	3E-7	-	-
		Y, oxides and hydroxides	-	2E+5	8E-5	3E-7	-	-
47	Silver-103[2]	D, see ^{102}Ag	4E+4	1E+5	4E-5	1E-7	5E-4	5E-3
		W, see ^{102}Ag	-	1E+5	5E-5	2E-7	-	-
		Y, see ^{102}Ag	-	1E+5	5E-5	2E-7	-	-
47	Silver-104m[2]	D, see ^{102}Ag	3E+4	9E+4	4E-5	1E-7	4E-4	4E-3
		W, see ^{102}Ag	-	1E+5	5E-5	2E-7	-	-
		Y, see ^{102}Ag	-	1E+5	5E-5	2E-7	-	-
47	Silver-104[2]	D, see ^{102}Ag	2E+4	7E+4	3E-5	1E-7	3E-4	3E-3
		W, see ^{102}Ag	-	1E+5	6E-5	2E-7	-	-
		Y, see ^{102}Ag	-	1E+5	6E-5	2E-7	-	-
47	Silver-105	D, see ^{102}Ag	3E+3	1E+3	4E-7	1E-9	4E-5	4E-4
		W, see ^{102}Ag	-	2E+3	7E-7	2E-9	-	-
		Y, see ^{102}Ag	-	2E+3	7E-7	2E-9	-	-
47	Silver-106m	D, see ^{102}Ag	8E+2	7E+2	3E-7	1E-9	1E-5	1E-4
		W, see ^{102}Ag	-	9E+2	4E-7	1E-9	-	-
		Y, see ^{102}Ag	-	9E+2	4E-7	1E-9	-	-
47	Silver-106[2]	D, see ^{102}Ag	6E+4	2E+5	8E-5	3E-7	-	-
			St. wall (6E+4)	-	-	-	9E-4	9E-3
		W, see ^{102}Ag	-	2E+5	9E-5	3E-7	-	-
		Y, see ^{102}Ag	-	2E+5	8E-5	3E-7	-	-
47	Silver-108m	D, see ^{102}Ag	6E+2	2E+2	8E-8	3E-10	9E-6	9E-5
		W, see ^{102}Ag	-	3E+2	1E-7	4E-10	-	-
		Y, see ^{102}Ag	-	2E+1	1E-8	3E-11	-	-
47	Silver-110m	D, see ^{102}Ag	5E+2	1E+2	5E-8	2E-10	6E-6	6E-5
		W, see ^{102}Ag	-	2E+2	8E-8	3E-10	-	-
		Y, see ^{102}Ag	-	9E+1	4E-8	1E-10	-	-
47	Silver-111	D, see ^{102}Ag	9E+2	2E+3	6E-7	-	-	-
			LLI wall (1E+3)	Liver (2E+3)	-	2E-9	2E-5	2E-4
		W, see ^{102}Ag	-	9E+2	4E-7	1E-9	-	-
		Y, see ^{102}Ag	-	9E+2	4E-7	1E-9	-	-
47	Silver-112	D, see ^{102}Ag	3E+3	8E+3	3E-6	1E-8	4E-5	4E-4
		W, see ^{102}Ag	-	1E+4	4E-6	1E-8	-	-
		Y, see ^{102}Ag	-	9E+3	4E-6	1E-8	-	-

Atomic No.	Radionuclide	Class	Table 1 Occupational Values: Col. 1 Oral Ingestion ALI (μCi)	Table 1 Occupational Values: Col. 2 Inhalation ALI (μCi)	Table 1 Occupational Values: Col. 3 Inhalation DAC (μCi/ml)	Table 2 Effluent Concentrations: Col. 1 Air (μCi/ml)	Table 2 Effluent Concentrations: Col. 2 Water (μCi/ml)	Table 3 Releases to Sewers: Monthly Average Concentration (μCi/ml)
47	Silver-115[2]	D, see ^{102}Ag	3E+4	9E+4	4E-5	1E-7	-	-
			St. wall (3E+4)	-	-	-	4E-4	4E-3
		W, see ^{102}Ag	-	9E+4	4E-5	1E-7	-	-
		Y, see ^{102}Ag	-	8E+4	3E-5	1E-7	-	-
48	Cadmium-104[2]	D, all compounds except those given for W and Y	2E+4	7E+4	3E-5	9E-8	3E-4	3E-3
		W, sulfides, halides, and nitrates	-	1E+5	5E-5	2E-7	-	-
		Y, oxides and hydroxides	-	1E+5	5E-5	2E-7	-	-
48	Cadmium-107	D, see ^{104}Cd	2E+4	5E+4	2E-5	8E-8	3E-4	3E-3
		W, see ^{104}Cd	-	6E+4	2E-5	8E-8	-	-
		Y, see ^{104}Cd	-	5E+4	2E-5	7E-8	-	-
48	Cadmium-109	D, see ^{104}Cd	3E+2	4E+1	1E-8	-	-	-
			Kidneys (4E+2)	Kidneys (5E+1)	-	7E-11	6E-6	6E-5
		W, see ^{104}Cd	-	1E+2	5E-8	-	-	-
			-	Kidneys (1E+2)	-	2E-10	-	-
		Y, see ^{104}Cd	-	1E+2	5E-8	2E-10	-	-
48	Cadmium-113m	D, see ^{104}Cd	2E+1	2E+0	1E-9	-		-
			Kidneys (4E+1)	Kidneys (4E+0)	-	5E-12	5E-7	5E-6
		W, see ^{104}Cd	-	8E+0	4E-9	-	-	-
			-	Kidneys (1E+1)	-	2E-11	-	-
		Y, see ^{104}Cd	-	1E+1	5E-9	2E-11	-	-
48	Cadmium-113	D, see ^{104}Cd	2E+1	2E+0	9E-10	-	-	-
			Kidneys (3E+1)	Kidneys (3E+0)	-	5E-12	4E-7	4E-6
		W, see ^{104}Cd	-	8E+0	3E-9	-	-	-
			-	Kidneys (1E+1)	-	2E-11	-	-
		Y, see ^{104}Cd	-	1E+1	6E-9	2E-11	-	-
48	Cadmium-115m	D, see ^{104}Cd	3E+2	5E+1	2E-8	-	4E-6	4E-5
			-	Kidneys (8E+1)	-	1E-10	-	-
		W, see ^{104}Cd	-	1E+2	5E-8	2E-10	-	-
		Y, see ^{104}Cd	-	1E+2	6E-8	2E-10	-	-
48	Cadmium-115	D, see ^{104}Cd	9E+2	1E+3	6E-7	2E-9	-	-
			LLI wall (1E+3)	-	-	-	1E-5	1E-4
		W, see ^{104}Cd	-	1E+3	5E-7	2E-9	-	-
		Y, see ^{104}Cd	-	1E+3	6E-7	2E-9	-	-
48	Cadmium-117m	D, see ^{104}Cd	5E+3	1E+4	5E-6	2E-8	6E-5	6E-4
		W, see ^{104}Cd	-	2E+4	7E-6	2E-8	-	-
		Y, see ^{104}Cd	-	1E+4	6E-6	2E-8	-	-

58 FR 67657

58 FR 67657

Atomic No.	Radionuclide	Class	Table 1 Occupational Values Col. 1 Oral Ingestion ALI (μCi)	Col. 2 Inhalation ALI (μCi)	Col. 3 Inhalation DAC (μCi/ml)	Table 2 Effluent Concentrations Col. 1 Air (μCi/ml)	Col. 2 Water (μCi/ml)	Table 3 Releases to Sewers Monthly Average Concentration (μCi/ml)
48	Cadmium-117	D, see ^{104}Cd	5E+3	1E+4	5E-6	2E-8	6E-5	6E-4
		W, see ^{104}Cd	-	2E+4	7E-6	2E-8	-	-
		Y, see ^{104}Cd	-	1E+4	6E-6	2E-8	-	-
49	*Indium-109*	*D, all compounds except* those given for W	2E+4	4E+4	2E-5	6E-8	3E-4	3E-3
		W, oxides, hydroxides, halides, and nitrates	-	6E+4	3E-5	9E-8	-	-
49	Indium-110[2] (69.1 min)	D, see ^{109}In	2E+4	4E+4	2E-5	6E-8	2E-4	2E-3
		W, see ^{109}In	-	6E+4	2E-5	8E-8	-	-
49	Indium-110 (4.9 h)	D, see ^{109}In	5E+3	2E+4	7E-6	2E-8	7E-5	7E-4
		W, see ^{109}In	-	2E+4	8E-6	3E-8	-	-
49	Indium-111	D, see ^{109}In	4E+3	6E+3	3E-6	9E-9	6E-5	6E-4
		W, see ^{109}In	-	6E+3	3E-6	9E-9	-	-
49	Indium-112[2]	D, see ^{109}In	2E+5	6E+5	3E-4	9E-7	2E-3	2E-2
		W, see ^{109}In	-	7E+5	3E-4	1E-6	-	-
49	Indium-113m[2]	D, see ^{109}In	5E+4	1E+5	6E-5	2E-7	7E-4	7E-3
		W, see ^{109}In	-	2E+5	8E-5	3E-7	-	-
49	Indium-114m	D, see ^{109}In	3E+2	6E+1	3E-8	9E-11	-	-
			LLI wall (4E+2)	-	-	-	5E-6	5E-5
		W, see ^{109}In	-	1E+2	4E-8	1E-10	-	-
49	Indium-115m	D, see ^{109}In	1E+4	4E+4	2E-5	6E-8	2E-4	2E-3
		W, see ^{109}In	-	5E+4	2E-5	7E-8	-	-
49	Indium-115	D, see ^{109}In	4E+1	1E+0	6E-10	2E-12	5E-7	5E-6
		W, see ^{109}In	-	5E+0	2E-9	8E-12	-	-
49	Indium-116m[2]	D, see ^{109}In	2E+4	8E+4	3E-5	1E-7	3E-4	3E-3
		W, see ^{109}In	-	1E+5	5E-5	2E-7	-	-
49	Indium-117m[2]	D, see ^{109}In	1E+4	3E+4	1E-5	5E-8	2E-4	2E-3
		W, see ^{109}In	-	4E+4	2E-5	6E-8	-	-
49	Indium-117[2]	D, see ^{109}In	6E+4	2E+5	7E-5	2E-7	8E-4	8E-3
		W, see ^{109}In	-	2E+5	9E-5	3E-7	-	-
49	Indium-119m[2]	D, see ^{109}In	4E+4	1E+5	5E-5	2E-7	-	-
			St. wall (5E+4)	-	-	-	7E-4	7E-3
		W, see ^{109}In	-	1E+5	6E-5	2E-7	-	-
50	Tin-110	D, all compounds except those given for W	4E+3	1E+4	5E-6	2E-8	5E-5	5E-4
		W, sulfides, oxides, hydroxides, halides, nitrates, and stannic phosphate	-	1E+4	5E-6	2E-8	-	-
50	Tin-111[2]	D, see ^{110}Sn	7E+4	2E+5	9E-5	3E-7	1E-3	1E-2
		W, see ^{110}Sn	-	3E+5	1E-4	4E-7	-	-

Atomic No.	Radionuclide	Class	Table 1 Occupational Values: Col. 1 Oral Ingestion ALI (μCi)	Col. 2 Inhalation ALI (μCi)	Col. 3 Inhalation DAC (μCi/ml)	Table 2 Effluent Concentrations: Col. 1 Air (μCi/ml)	Col. 2 Water (μCi/ml)	Table 3 Releases to Sewers: Monthly Average Concentration (μCi/ml)
50	Tin-113	D, see ^{110}Sn	2E+3	1E+3	5E-7	2E-9	-	-
			LLI wall (2E+3)	-	-	-	3E-5	3E-4
		W, see ^{110}Sn	-	5E+2	2E-7	8E-10	-	-
50	Tin-117m	D, see ^{110}Sn	2E+3	1E+3	5E-7	-	-	-
			LLI wall (2E+3)	Bone surf (2E+3)	-	3E-9	3E-5	3E-4
		W, see ^{110}Sn	-	1E+3	6E-7	2E-9	-	-
50	Tin-119m	D, see ^{110}Sn	3E+3	2E+3	1E-6	3E-9	-	-
			LLI wall (4E+3)	-	-	-	6E-5	6E-4
		W, see ^{110}Sn	-	1E+3	4E-7	1E-9	-	-
50	Tin-121m	D, see ^{110}Sn	3E+3	9E+2	4E-7	1E-9	-	-
			LLI wall (4E+3)	-	-	-	5E-5	5E-4
		W, see ^{110}Sn	-	5E+2	2E-7	8E-10	-	-
50	Tin-121	D, see ^{110}Sn	6E+3	2E+4	6E-6	2E-8	-	-
			LLI wall (6E+3)	-	-	-	8E-5	8E-4
		W, see ^{110}Sn	-	1E+4	5E-6	2E-8	-	-
50	Tin-123m[2]	D, see ^{110}Sn	5E+4	1E+5	5E-5	2E-7	7E-4	7E-3
		W, see ^{110}Sn	-	1E+5	6E-5	2E-7	-	-
50	Tin-123	D, see ^{110}Sn	5E+2	6E+2	3E-7	9E-10	-	-
			LLI wall (6E+2)	-	-	-	9E-6	9E-5
		W, see ^{110}Sn	-	2E+2	7E-8	2E-10	-	-
50	Tin-125	D, see ^{110}Sn	4E+2	9E+2	4E-7	1E-9	-	-
			LLI wall (5E+2)	-	-	-	6E-6	6E-5
		W, see ^{110}Sn	-	4E+2	1E-7	5E-10	-	-
50	Tin-126	D, see ^{110}Sn	3E+2	6E+1	2E-8	8E-11	4E-6	4E-5
		W, see ^{110}Sn	-	7E+1	3E-8	9E-11	-	-
50	Tin-127	D, see ^{110}Sn	7E+3	2E+4	8E-6	3E-8	9E-5	9E-4
		W, see ^{110}Sn	-	2E+4	8E-6	3E-8	-	-
50	Tin-128[2]	D, see ^{110}Sn	9E+3	3E+4	1E-5	4E-8	1E-4	1E-3
		W, see ^{110}Sn	-	4E+4	1E-5	5E-8	-	-
51	Antimony-115[2]	D, all compounds except those given for W	8E+4	2E+5	1E-4	3E-7	1E-3	1E-2
		W, oxides, hydroxides, halides, sulfides, sulfates, and nitrates	-	3E+5	1E-4	4E-7	-	-
51	Antimony-116m[2]	D, see ^{115}Sb	2E+4	7E+4	3E-5	1E-7	3E-4	3E-3
		W, see ^{115}Sb	-	1E+5	6E-5	2E-7	-	-
51	Antimony-116[2]	D, see ^{115}Sb	7E+4	3E+5	1E-4	4E-7	-	-
			St. wall (9E+4)	-	-	-	1E-3	1E-2
		W, see ^{115}Sb	-	3E+5	1E-4	5E-7	-	-
51	Antimony-117	D, see ^{115}Sb	7E+4	2E+5	9E-5	3E-7	9E-4	9E-3
		W, see ^{115}Sb	-	3E+5	1E-4	4E-7	-	-

58 FR 67657

58 FR 67657

Atomic No.	Radionuclide	Class	Table 1 Occupational Values: Col. 1 Oral Ingestion ALI (μCi)	Table 1 Occupational Values: Col. 2 Inhalation ALI (μCi)	Table 1 Occupational Values: Col. 3 Inhalation DAC (μCi/ml)	Table 2 Effluent Concentrations: Col. 1 Air (μCi/ml)	Table 2 Effluent Concentrations: Col. 2 Water (μCi/ml)	Table 3 Releases to Sewers: Monthly Average Concentration (μCi/ml)
51	Antimony-118m	D, see ^{115}Sb	6E+3	2E+4	8E-6	3E-8	7E-5	7E-4
		W, see ^{115}Sb	5E+3	2E+4	9E-6	3E-8	-	-
51	Antimony-119	D, see ^{115}Sb	2E+4	5E+4	2E-5	6E-8	2E-4	2E-3
		W, see ^{115}Sb	2E+4	3E+4	1E-5	4E-8	-	-
51	Antimony-120[2] (16 min)	D, see ^{115}Sb	1E+5	4E+5	2E-4	6E-7	-	-
			St. wall (2E+5)	-	-	-	2E-3	2E-2
		W, see ^{115}Sb	-	5E+5	2E-4	7E-7	-	-
51	Antimony-120 (5.76 d)	D, see ^{115}Sb	1E+3	2E+3	9E-7	3E-9	1E-5	1E-4
		W, see ^{115}Sb	9E+2	1E+3	5E-7	2E-9	-	-
51	Antimony-122	D, see ^{115}Sb	8E+2	2E+3	1E-6	3E-9	-	-
			LLI wall (8E+2)	-	-	-	1E-5	1E-4
		W, see ^{115}Sb	7E+2	1E+3	4E-7	2E-9	-	-
51	Antimony-124m[2]	D, see ^{115}Sb	3E+5	8E+5	4E-4	1E-6	3E-3	3E-2
		W, see ^{115}Sb	2E+5	6E+5	2E-4	8E-7	-	-
51	Antimony-124	D, see ^{115}Sb	6E+2	9E+2	4E-7	1E-9	7E-6	7E-5
		W, see ^{115}Sb	5E+2	2E+2	1E-7	3E-10	-	-
51	Antimony-125	D, see ^{115}Sb	2E+3	2E+3	1E-6	3E-9	3E-5	3E-4
		W, see ^{115}Sb	-	5E+2	2E-7	7E-10	-	-
51	Antimony-126m[2]	D, see ^{115}Sb	5E+4	2E+5	8E-5	3E-7	-	-
			St. wall (7E+4)	-	-	-	9E-4	9E-3
		W, see ^{115}Sb	-	2E+5	8E-5	3E-7	-	-
51	Antimony-126	D, see ^{115}Sb	6E+2	1E+3	5E-7	2E-9	7E-6	7E-5
		W, see ^{115}Sb	5E+2	5E+2	2E-7	7E-10	-	-
51	Antimony-127	D, see ^{115}Sb	8E+2	2E+3	9E-7	3E-9	-	-
			LLI wall (8E+2)	-	-	-	1E-5	1E-4
		W, see ^{115}Sb	7E+2	9E+2	4E-7	1E-9	-	-
51	Antimony-128[2] (10.4 min)	D, see ^{115}Sb	8E+4	4E+5	2E-4	5E-7	-	-
			St. wall (1E+5)	-	-	-	1E-3	1E-2
		W, see ^{115}Sb	-	4E+5	2E-4	6E-7	-	-
51	Antimony-128 (9.01 h)	D, see ^{115}Sb	1E+3	4E+3	2E-6	6E-9	2E-5	2E-4
		W, see ^{115}Sb	-	3E+3	1E-6	5E-9	-	-
51	Antimony-129	D, see ^{115}Sb	3E+3	9E+3	4E-6	1E-8	4E-5	4E-4
		W, see ^{115}Sb	-	9E+3	4E-6	1E-8	-	-
51	Antimony-130[2]	D, see ^{115}Sb	2E+4	6E+4	3E-5	9E-8	3E-4	3E-3
		W, see ^{115}Sb	-	8E+4	3E-5	1E-7	-	-
51	Antimony-131[2]	D, see ^{115}Sb	1E+4	2E+4	1E-5	-	-	-
			Thyroid (2E+4)	Thyroid (4E+4)	-	6E-8	2E-4	2E-3
		W, see ^{115}Sb	-	2E+4	1E-5		-	-
			-	Thyroid (4E+4)	-	6E-8	-	-

58 FR 67657

Atomic No.	Radionuclide	Class	Table 1 Occupational Values: Col. 1 Oral Ingestion ALI (μCi)	Table 1 Occupational Values: Col. 2 Inhalation ALI (μCi)	Table 1 Occupational Values: Col. 3 Inhalation DAC (μCi/ml)	Table 2 Effluent Concentrations: Col. 1 Air (μCi/ml)	Table 2 Effluent Concentrations: Col. 2 Water (μCi/ml)	Table 3 Releases to Sewers: Monthly Average Concentration (μCi/ml)
52	Tellurium-116	D, all compounds except those given for W	8E+3	2E+4	9E-6	3E-8	1E-4	1E-3
		W, oxides, hydroxides, and nitrates	-	3E+4	1E-5	4E-8	-	-
52	Tellurium-121m	D, see ^{116}Te	5E+2	2E+2	8E-8	-	-	-
			Bone surf (7E+2)	Bone surf (4E+2)	-	5E-10	1E-5	1E-4
		W, see ^{116}Te	-	4E+2	2E-7	6E-10	-	-
52	Tellurium-121	D, see ^{116}Te	3E+3	4E+3	2E-6	6E-9	4E-5	4E-4
		W, see ^{116}Te	-	3E+3	1E-6	4E-9	-	-
52	Tellurium-123m	D, see ^{116}Te	6E+2	2E+2	9E-8	-	-	-
			Bone surf (1E+3)	Bone surf (5E+2)	-	8E-10	1E-5	1E-4
		W, see ^{116}Te	-	5E+2	2E-7	8E-10	-	-
52	Tellurium-123	D, see ^{116}Te	5E+2	2E+2	8E-8	-	-	-
			Bone surf (1E+3)	Bone surf (5E+2)	-	7E-10	2E-5	2E-4
		W, see ^{116}Te	-	4E+2	2E-7	-	-	-
			-	Bone surf (1E+3)	-	2E-9	-	-
52	Tellurium-125m	D, see ^{116}Te	1E+3	4E+2	2E-7	-	-	-
			Bone surf (1E+3)	Bone surf (1E+3)	-	1E-9	2E-5	2E-4
		W, see ^{116}Te	-	7E+2	3E-7	1E-9	-	-
52	Tellurium-127m	D, see ^{116}Te	6E+2	3E+2	1E-7	-	9E-6	9E-5
			-	Bone surf (4E+2)	-	6E-10	-	-
		W, see ^{116}Te	-	3E+2	1E-7	4E-10	-	-
52	Tellurium-127	D, see ^{116}Te	7E+3	2E+4	9E-6	3E-8	1E-4	1E-3
		W, see ^{116}Te	-	2E+4	7E-6	2E-8	-	-
52	Tellurium-129m	D, see ^{116}Te	5E+2	6E+2	3E-7	9E-10	7E-6	7E-5
		W, see ^{116}Te	-	2E+2	1E-7	3E-10	-	-
52	Tellurium-129[2]	D, see ^{116}Te	3E+4	6E+4	3E-5	9E-8	4E-4	4E-3
		W, see ^{116}Te	-	7E+4	3E-5	1E-7	-	-
52	Tellurium-131m	D, see ^{116}Te	3E+2	4E+2	2E-7	-	-	-
			Thyroid (6E+2)	Thyroid (1E+3)	-	2E-9	8E-6	8E-5
		W, see ^{116}Te	-	4E+2	2E-7	-	-	-
			-	Thyroid (9E+2)	-	1E-9	-	-
52	Tellurium-131[2]	D, see ^{116}Te	3E+3	5E+3	2E-6	-	-	-
			Thyroid (6E+3)	Thyroid (1E+4)	-	2E-8	8E-5	8E-4
		W, see ^{116}Te	-	5E+3	2E-6	-	-	-
			-	Thyroid (1E+4)	-	2E-8	-	-

58 FR 67657

Atomic No.	Radionuclide	Class	Table 1 Occupational Values: Col. 1 Oral Ingestion ALI (μCi)	Col. 2 Inhalation ALI (μCi)	Col. 3 Inhalation DAC (μCi/ml)	Table 2 Effluent Concentrations: Col. 1 Air (μCi/ml)	Col. 2 Water (μCi/ml)	Table 3 Releases to Sewers: Monthly Average Concentration (μCi/ml)
52	Tellurium-132	D, see ^{116}Te	2E+2 Thyroid (7E+2)	2E+2 Thyroid (8E+2)	9E-8 -	- 1E-9	- 9E-6	- 9E-5
		W, see ^{116}Te	- -	2E+2 Thyroid (6E+2)	9E-8 -	- 9E-10	- -	- -
52	Tellurium-133m[2]	D, see ^{116}Te	3E+3 Thyroid (6E+3)	5E+3 Thyroid (1E+4)	2E-6 -	- 2E-8	- 9E-5	- 9E-4
		W, see ^{116}Te	- -	5E+3 Thyroid (1E+4)	2E-6 -	- 2E-8	- -	- -
52	Tellurium-133[2]	D, see ^{116}Te	1E+4 Thyroid (3E+4)	2E+4 Thyroid (6E+4)	9E-6 -	- 8E-8	- 4E-4	- 4E-3
		W, see ^{116}Te	- -	2E+4 Thyroid (6E+4)	9E-6 -	- 8E-8	- -	- -
52	Tellurium-134[2]	D, see ^{116}Te	2E+4 Thyroid (2E+4)	2E+4 Thyroid (5E+4)	1E-5 -	- 7E-8	- 3E-4	- 3E-3
		W, see ^{116}Te	- -	2E+4 Thyroid (5E+4)	1E-5 -	- 7E-8	- -	- -
53	Iodine-120m[2]	D, all compounds	1E+4 Thyroid (1E+4)	2E+4 -	9E-6 -	3E-8 -	- 2E-4	- 2E-3
53	Iodine-120[2]	D, all compounds	4E+3 Thyroid (8E+3)	9E+3 Thyroid (1E+4)	4E-6 -	- 2E-8	- 1E-4	- 1E-3
53	Iodine-121	D, all compounds	1E+4 Thyroid (3E+4)	2E+4 Thyroid (5E+4)	8E-6 -	- 7E-8	- 4E-4	- 4E-3
53	Iodine-123	D, all compounds	3E+3 Thyroid (1E+4)	6E+3 Thyroid (2E+4)	3E-6 -	- 2E-8	- 1E-4	- 1E-3
53	Iodine-124	D, all compounds	5E+1 Thyroid (2E+2)	8E+1 Thyroid (3E+2)	3E-8 -	- 4E-10	- 2E-6	- 2E-5
53	Iodine-125	D, all compounds	4E+1 Thyroid (1E+2)	6E+1 Thyroid (2E+2)	3E-8 -	- 3E-10	- 2E-6	- 2E-5
53	Iodine-126	D, all compounds	2E+1 Thyroid (7E+1)	4E+1 Thyroid (1E+2)	1E-8 -	- 2E-10	- 1E-6	- 1E-5
53	Iodine-128[2]	D, all compounds	4E+4 St. wall (6E+4)	1E+5 -	5E-5 -	2E-7 -	- 8E-4	- 8E-3
53	Iodine-129	D, all compounds	5E+0 Thyroid (2E+1)	9E+0 Thyroid (3E+1)	4E-9 -	- 4E-11	- 2E-7	- 2E-6

58 FR 67657

Atomic No.	Radionuclide	Class	Table 1 Occupational Values: Col. 1 Oral Ingestion ALI (μCi)	Col. 2 Inhalation ALI (μCi)	Col. 3 Inhalation DAC (μCi/ml)	Table 2 Effluent Concentrations: Col. 1 Air (μCi/ml)	Col. 2 Water (μCi/ml)	Table 3 Releases to Sewers: Monthly Average Concentration (μCi/ml)
53	Iodine-130	D, all compounds	4E+2	7E+2	3E-7	-	-	-
			Thyroid (1E+3)	Thyroid (2E+3)	-	3E-9	2E-5	2E-4
53	Iodine-131	D, all compounds	3E+1	5E+1	2E-8	-	-	-
			Thyroid (9E+1)	Thyroid (2E+2)	-	2E-10	1E-6	1E-5
53	Iodine-132m[2]	D, all compounds	4E+3	8E+3	4E-6	-	-	-
			Thyroid (1E+4)	Thyroid (2E+4)	-	3E-8	1E-4	1E-3
53	Iodine-132	D, all compounds	4E+3	8E+3	3E-6	-	-	-
			Thyroid (9E+3)	Thyroid (1E+4)	-	2E-8	1E-4	1E-3
53	Iodine-133	D, all compounds	1E+2	3E+2	1E-7	-	-	-
			Thyroid (5E+2)	Thyroid (9E+2)	-	1E-9	7E-6	7E-5
53	Iodine-134[2]	D, all compounds	2E+4	5E+4	2E-5	6E-8	-	-
			Thyroid (3E+4)	-	-	-	4E-4	4E-3
53	Iodine-135	D, all compounds	8E+2	2E+3	7E-7	-	-	-
			Thyroid (3E+3)	Thyroid (4E+3)	-	6E-9	3E-5	3E-4
54	Xenon-120[2]	Submersion[1]	-	-	1E-5	4E-8	-	-
54	Xenon-121[2]	Submersion[1]	-	-	2E-6	1E-8	-	-
54	Xenon-122	Submersion[1]	-	-	7E-5	3E-7	-	-
54	Xenon-123	Submersion[1]	-	-	6E-6	3E-8	-	-
54	Xenon-125	Submersion[1]	-	-	2E-5	7E-8	-	-
54	Xenon-127	Submersion[1]	-	-	1E-5	6E-8	-	-
54	Xenon-129m	Submersion[1]	-	-	2E-4	9E-7	-	-
54	Xenon-131m	Submersion[1]	-	-	4E-4	2E-6	-	-
54	Xenon-133m	Submersion[1]	-	-	1E-4	6E-7	-	-
54	Xenon-133	Submersion[1]	-	-	1E-4	5E-7	-	-
54	Xenon-135m[2]	Submersion[1]	-	-	9E-6	4E-8	-	-
54	Xenon-135	Submersion[1]	-	-	1E-5	7E-8	-	-
54	Xenon-138[2]	Submersion[1]	-	-	4E-6	2E-8	-	-
55	Cesium-125[2]	D, all compounds	5E+4	1E+5	6E-5	2E-7	-	-
			St. wall (9E+4)	-	-	-	1E-3	1E-2
55	Cesium-127	D, all compounds	6E+4	9E+4	4E-5	1E-7	9E-4	9E-3

58 FR 67657

Atomic No.	Radionuclide	Class	Table 1 Occupational Values Col. 1 Oral Ingestion ALI (μCi)	Col. 2 Inhalation ALI (μCi)	Col. 3 Inhalation DAC (μCi/ml)	Table 2 Effluent Concentrations Col. 1 Air (μCi/ml)	Col. 2 Water (μCi/ml)	Table 3 Releases to Sewers Monthly Average Concentration (μCi/ml)
55	Cesium-129	D, all compounds	2E+4	3E+4	1E-5	5E-8	3E-4	3E-3
55	Cesium-130[2]	D, all compounds	6E+4	2E+5	8E-5	3E-7	-	-
			St. wall (1E+5)	-	-	-	1E-3	1E-2
55	Cesium-131	D, all compounds	2E+4	3E+4	1E-5	4E-8	3E-4	3E-3
55	Cesium-132	D, all compounds	3E+3	4E+3	2E-6	6E-9	4E-5	4E-4
55	Cesium-134m	D, all compounds	1E+5	1E+5	5E-5	2E-7	-	-
			St. wall (1E+5)	-	-	-	2E-3	2E-2
55	Cesium-134	D, all compounds	7E+1	1E+2	4E-8	2E-10	9E-7	9E-6
55	Cesium-135m[2]	D, all compounds	1E+5	2E+5	8E-5	3E-7	1E-3	1E-2
55	Cesium-135	D, all compounds	7E+2	1E+3	5E-7	2E-9	1E-5	1E-4
55	Cesium-136	D, all compounds	4E+2	7E+2	3E-7	9E-10	6E-6	6E-5
55	Cesium-137	D, all compounds	1E+2	2E+2	6E-8	2E-10	1E-6	1E-5
55	Cesium-138[2]	D, all compounds	2E+4	6E+4	2E-5	8E-8	-	-
			St. wall (3E+4)	-	-	-	4E-4	4E-3
56	Barium-126[2]	D, all compounds	6E+3	2E+4	6E-6	2E-8	8E-5	8E-4
56	Barium-128	D, all compounds	5E+2	2E+3	7E-7	2E-9	7E-6	7E-5
56	Barium-131m[2]	D, all compounds	4E+5	1E+6	6E-4	2E-6	-	-
			St. wall (5E+5)	-	-	-	7E-3	7E-2
56	Barium-131	D, all compounds	3E+3	8E+3	3E-6	1E-8	4E-5	4E-4
56	Barium-133m	D, all compounds	2E+3	9E+3	4E-6	1E-8	-	-
			LLI wall (3E+3)	-	-	-	4E-5	4E-4
56	Barium-133	D, all compounds	2E+3	7E+2	3E-7	9E-10	2E-5	2E-4
56	Barium-135m	D, all compounds	3E+3	1E+4	5E-6	2E-8	4E-5	4E-4
56	Barium-139[2]	D, all compounds	1E+4	3E+4	1E-5	4E-8	2E-4	2E-3
56	Barium-140	D, all compounds	5E+2	1E+3	6E-7	2E-9	-	-
			LLI wall (6E+2)	-	-	-	8E-6	8E-5
56	Barium-141[2]	D, all compounds	2E+4	7E+4	3E-5	1E-7	3E-4	3E-3
56	Barium-142[2]	D, all compounds	5E+4	1E+5	6E-5	2E-7	7E-4	7E-3
57	Lanthanum-131[2]	D, all compounds except those given for W	5E+4	1E+5	5E-5	2E-7	6E-4	6E-3
		W, oxides and hydroxides	-	2E+5	7E-5	2E-7	-	-

58 FR 67657

Atomic No.	Radionuclide	Class	Table 1 Occupational Values: Col. 1 Oral Ingestion ALI (μCi)	Col. 2 Inhalation ALI (μCi)	Col. 3 Inhalation DAC (μCi/ml)	Table 2 Effluent Concentrations: Col. 1 Air (μCi/ml)	Col. 2 Water (μCi/ml)	Table 3 Releases to Sewers: Monthly Average Concentration (μCi/ml)
57	Lanthanum-132	D, see ^{131}La	3E+3	1E+4	4E-6	1E-8	4E-5	4E-4
		W, see ^{131}La	-	1E+4	5E-6	2E-8	-	-
57	Lanthanum-135	D, see ^{131}La	4E+4	1E+5	4E-5	1E-7	5E-4	5E-3
		W, see ^{131}La	-	9E+4	4E-5	1E-7	-	-
57	Lanthanum-137	D, see ^{131}La	1E+4	6E+1	3E-8	-	2E-4	2E-3
			-	Liver (7E+1)	-	1E-10	-	-
		W, see ^{131}La	-	3E+2	1E-7	-	-	-
			-	Liver (3E+2)	-	4E-10	-	-
57	Lanthanum-138	D, see ^{131}La	9E+2	4E+0	1E-9	5E-12	1E-5	1E-4
		W, see ^{131}La	-	1E+1	6E-9	2E-11	-	-
57	Lanthanum-140	D, see ^{131}La	6E+2	1E+3	6E-7	2E-9	9E-6	9E-5
		W, see ^{131}La	-	1E+3	5E-7	2E-9	-	-
57	Lanthanum-141	D, see ^{131}La	4E+3	9E+3	4E-6	1E-8	5E-5	5E-4
		W, see ^{131}La	-	1E+4	5E-6	2E-8	-	-
57	Lanthanum-142[2]	D, see ^{131}La	8E+3	2E+4	9E-6	3E-8	1E-4	1E-3
		W, see ^{131}La	-	3E+4	1E-5	5E-8	-	-
57	Lanthanum-143[2]	D, see ^{131}La	4E+4	1E+5	4E-5	1E-7	-	-
			St. wall (4E+4)	-	-	-	5E-4	5E-3
		W, see ^{131}La	-	9E+4	4E-5	1E-7	-	-
58	Cerium-134	W, all compounds except those given for Y	5E+2	7E+2	3E-7	1E-9	-	-
			LLI wall (6E+2)	-	-	-	8E-6	8E-5
		Y, oxides, hydroxides, and fluorides	-	7E+2	3E-7	9E-10	-	-
58	Cerium-135	W, see ^{134}Ce	2E+3	4E+3	2E-6	5E-9	2E-5	2E-4
		Y, see ^{134}Ce	-	4E+3	1E-6	5E-9	-	-
58	Cerium-137m	W, see ^{134}Ce	2E+3	4E+3	2E-6	6E-9	-	-
			LLI wall (2E+3)	-	-	-	3E-5	3E-4
		Y, see ^{134}Ce	-	4E+3	2E-6	5E-9	-	-
58	Cerium-137	W, see ^{134}Ce	5E+4	1E+5	6E-5	2E-7	7E-4	7E-3
		Y, see ^{134}Ce	-	1E+5	5E-5	2E-7	-	-
58	Cerium-139	W, see ^{134}Ce	5E+3	8E+2	3E-7	1E-9	7E-5	7E-4
		Y, see ^{134}Ce	-	7E+2	3E-7	9E-10	-	-
58	Cerium-141	W, see ^{134}Ce	2E+3	7E+2	3E-7	1E-9	-	-
			LLI wall (2E+3)	-	-	-	3E-5	3E-4
		Y, see ^{134}Ce	-	6E+2	2E-7	8E-10	-	-
58	Cerium-143	W, see ^{134}Ce	1E+3	2E+3	8E-7	3E-9	-	-
			LLI wall (1E+3)	-	-	-	2E-5	2E-4
		Y, see ^{134}Ce	-	2E+3	7E-7	2E-9	-	-

58 FR 67657

Atomic No.	Radionuclide	Class	Table 1 Occupational Values Col. 1 Oral Ingestion ALI (μCi)	Col. 2 Inhalation ALI (μCi)	Col. 3 Inhalation DAC (μCi/ml)	Table 2 Effluent Concentrations Col. 1 Air (μCi/ml)	Col. 2 Water (μCi/ml)	Table 3 Releases to Sewers Monthly Average Concentration (μCi/ml)
58	Cerium-144	W, see ^{134}Ce	2E+2	3E+1	1E-8	4E-11	-	-
			LLI wall (3E+2)	-	-	-	3E-6	3E-5
		Y, see ^{134}Ce	-	1E+1	6E-9	2E-11	-	-
59	Praseodymium-136[2]	W, all compounds except those given for Y	5E+4	2E+5	1E-4	3E-7	-	-
			St. wall (7E+4)	-	-	-	1E-3	1E-2
		Y, oxides, hydroxides, carbides, and fluorides	-	2E+5	9E-5	3E-7	-	-
59	Praseodymium-137[2]	W, see ^{136}Pr	4E+4	2E+5	6E-5	2E-7	5E-4	5E-3
		Y, see ^{136}Pr	-	1E+5	6E-5	2E-7	-	-
59	Praseodymium-138m	W, see ^{136}Pr	1E+4	5E+4	2E-5	8E-8	1E-4	1E-3
		Y, see ^{136}Pr	-	4E+4	2E-5	6E-8	-	-
59	Praseodymium-139	W, see ^{136}Pr	4E+4	1E+5	5E-5	2E-7	6E-4	6E-3
		Y, see ^{136}Pr	-	1E+5	5E-5	2E-7	-	-
59	Praseodymium-142m[2]	W, see ^{136}Pr	8E+4	2E+5	7E-5	2E-7	1E-3	1E-2
		Y, see ^{136}Pr	-	1E+5	6E-5	2E-7	-	-
59	Praseodymium-142	W, see ^{136}Pr	1E+3	2E+3	9E-7	3E-9	1E-5	1E-4
		Y, see ^{136}Pr	-	2E+3	8E-7	3E-9	-	-
59	Praseodymium-143	W, see ^{136}Pr	9E+2	8E+2	3E-7	1E-9	-	-
			LLI wall (1E+3)	-	-	-	2E-5	2E-4
		Y, see ^{136}Pr	-	7E+2	3E-7	9E-10	-	-
59	Praseodymium-144[2]	W, see ^{136}Pr	3E+4	1E+5	5E-5	2E-7	-	-
			St. wall (4E+4)	-	-	-	6E-4	6E-3
		Y, see ^{136}Pr	-	1E+5	5E-5	2E-7	-	-
59	Praseodymium-145	W, see ^{136}Pr	3E+3	9E+3	4E-6	1E-8	4E-5	4E-4
		Y, see ^{136}Pr	-	8E+3	3E-6	1E-8	-	-
59	Praseodymium-147[2]	W, see ^{136}Pr	5E+4	2E+5	8E-5	3E-7	-	-
			St. wall (8E+4)	-	-	-	1E-3	1E-2
		Y, see ^{136}Pr	-	2E+5	8E-5	3E-7	-	-
60	Neodymium-136[2]	W, all compounds except those given for Y	1E+4	6E+4	2E-5	8E-8	2E-4	2E-3
		Y, oxides, hydroxides, carbides, and fluorides	-	5E+4	2E-5	8E-8	-	-
60	Neodymium-138	W, see ^{136}Nd	2E+3	6E+3	3E-6	9E-9	3E-5	3E-4
		Y, see ^{136}Nd	-	5E+3	2E-6	7E-9	-	-
60	Neodymium-139m	W, see ^{136}Nd	5E+3	2E+4	7E-6	2E-8	7E-5	7E-4
		Y, see ^{136}Nd	-	1E+4	6E-6	2E-8	-	-

58 FR 67657

Atomic No.	Radionuclide	Class	Table 1 Occupational Values Col. 1 Oral Ingestion ALI (μCi)	Col. 2 Inhalation ALI (μCi)	Col. 3 Inhalation DAC (μCi/ml)	Table 2 Effluent Concentrations Col. 1 Air (μCi/ml)	Col. 2 Water (μCi/ml)	Table 3 Releases to Sewers Monthly Average Concentration (μCi/ml)
60	Neodymium-139[2]	W, see ^{136}Nd	9E+4	3E+5	1E-4	5E-7	1E-3	1E-2
		Y, see ^{136}Nd	-	3E+5	1E-4	4E-7	-	-
60	Neodymium-141	W, see ^{136}Nd	2E+5	7E+5	3E-4	1E-6	2E-3	2E-2
		Y, see ^{136}Nd	-	6E+5	3E-4	9E-7	-	-
60	Neodymium-147	W, see ^{136}Nd	1E+3	9E+2	4E-7	1E-9	-	-
			LLI wall (1E+3)	-	-	-	2E-5	2E-4
		Y, see ^{136}Nd	-	8E+2	4E-7	1E-9	-	-
60	Neodymium-149[2]	W, see ^{136}Nd	1E+4	3E+4	1E-5	4E-8	1E-4	1E-3
		Y, see ^{136}Nd	-	2E+4	1E-5	3E-8	-	-
60	Neodymium-151[2]	W, see ^{136}Nd	7E+4	2E+5	8E-5	3E-7	9E-4	9E-3
		Y, see ^{136}Nd	-	2E+5	8E-5	3E-7	-	-
61	Promethium-141[2]	W, all compounds except those given for Y	5E+4	2E+5	8E-5	3E-7	-	-
			St. wall (6E+4)	-	-	-	8E-4	8E-3
		Y, oxides, hydroxides, carbides, and fluorides	-	2E+5	7E-5	2E-7	-	-
61	Promethium-143	W, see ^{141}Pm	5E+3	6E+2	2E-7	8E-10	7E-5	7E-4
		Y, see ^{141}Pm	-	7E+2	3E-7	1E-9	-	-
61	Promethium-144	W, see ^{141}Pm	1E+3	1E+2	5E-8	2E-10	2E-5	2E-4
		Y, see ^{141}Pm	-	1E+2	5E-8	2E-10	-	-
61	Promethium-145	W, see ^{141}Pm	1E+4	2E+2	7E-8	-	1E-4	1E-3
			-	Bone surf (2E+2)	-	3E-10	-	-
		Y, see ^{141}Pm	-	2E+2	8E-8	3E-10	-	-
61	Promethium-146	W, see ^{141}Pm	2E+3	5E+1	2E-8	7E-11	2E-5	2E-4
		Y, see ^{141}Pm	-	4E+1	2E-8	6E-11	-	-
61	Promethium-147	W, see ^{141}Pm	4E+3	1E+2	5E-8	-	-	-
			LLI wall (5E+3)	Bone surf (2E+2)	-	3E-10	7E-5	7E-4
		Y, see ^{141}Pm	-	1E+2	6E-8	2E-10	-	-
61	Promethium-148m	W, see ^{141}Pm	7E+2	3E+2	1E-7	4E-10	1E-5	1E-4
		Y, see ^{141}Pm	-	3E+2	1E-7	5E-10	-	-
61	Promethium-148	W, see ^{141}Pm	4E+2	5E+2	2E-7	8E-10	-	-
			LLI wall (5E+2)	-	-	-	7E-6	7E-5
		Y, see ^{141}Pm	-	5E+2	2E-7	7E-10	-	-
61	Promethium-149	W, see ^{141}Pm	1E+3	2E+3	8E-7	3E-9	-	-
			LLI wall (1E+3)	-	-	-	2E-5	2E-4
		Y, see ^{141}Pm	-	2E+3	8E-7	2E-9	-	-
61	Promethium-150	W, see ^{141}Pm	5E+3	2E+4	8E-6	3E-8	7E-5	7E-4
		Y, see ^{141}Pm	-	2E+4	7E-6	2E-8	-	-
61	Promethium-151	W, see ^{141}Pm	2E+3	4E+3	1E-6	5E-9	2E-5	2E-4
		Y, see ^{141}Pm	-	3E+3	1E-6	4E-9	-	-

58 FR 67657

Atomic No.	Radionuclide	Class	Table 1 Occupational Values Col. 1 Oral Ingestion ALI (μCi)	Col. 2 Inhalation ALI (μCi)	Col. 3 Inhalation DAC (μCi/ml)	Table 2 Effluent Concentrations Col. 1 Air (μCi/ml)	Col. 2 Water (μCi/ml)	Table 3 Releases to Sewers Monthly Average Concentration (μCi/ml)
62	Samarium-141m[2]	W, all compounds	3E+4	1E+5	4E-5	1E-7	4E-4	4E-3
62	Samarium-141[2]	W, all compounds	5E+4	2E+5	8E-5	2E-7	-	-
			St. wall (6E+4)	-	-	-	8E-4	8E-3
62	Samarium-142[2]	W, all compounds	8E+3	3E+4	1E-5	4E-8	1E-4	1E-3
62	Samarium-145	W, all compounds	6E+3	5E+2	2E-7	7E-10	8E-5	8E-4
62	Samarium-146	W, all compounds	1E+1	4E-2	1E-11	-	-	-
			Bone surf (3E+1)	Bone surf (6E-2)	-	9E-14	3E-7	3E-6
62	Samarium-147	W, all compounds	2E+1	4E-2	2E-11	-	-	-
			Bone surf (3E+1)	Bone surf (7E-2)	-	1E-13	4E-7	4E-6
62	Samarium-151	W, all compounds	1E+4	1E+2	4E-8	-	-	-
			LLI wall (1E+4)	Bone surf (2E+2)	-	2E-10	2E-4	2E-3
62	Samarium-153	W, all compounds	2E+3	3E+3	1E-6	4E-9	-	-
			LLI wall (2E+3)	-	-	-	3E-5	3E-4
62	Samarium-155[2]	W, all compounds	6E+4	2E+5	9E-5	3E-7	-	-
			St. wall (8E+4)	-	-	-	1E-3	1E-2
62	Samarium-156	W, all compounds	5E+3	9E+3	4E-6	1E-8	7E-5	7E-4
63	Europium-145	W, all compounds	2E+3	2E+3	8E-7	3E-9	2E-5	2E-4
63	Europium-146	W, all compounds	1E+3	1E+3	5E-7	2E-9	1E-5	1E-4
63	Europium-147	W, all compounds	3E+3	2E+3	7E-7	2E-9	4E-5	4E-4
63	Europium-148	W, all compounds	1E+3	4E+2	1E-7	5E-10	1E-5	1E-4
63	Europium-149	W, all compounds	1E+4	3E+3	1E-6	4E-9	2E-4	2E-3
63	Europium-150 (12.62 h)	W, all compounds	3E+3	8E+3	4E-6	1E-8	4E-5	4E-4
63	Europium-150 (34.2 y)	W, all compounds	8E+2	2E+1	8E-9	3E-11	1E-5	1E-4
63	Europium-152m	W, all compounds	3E+3	6E+3	3E-6	9E-9	4E-5	4E-4
63	Europium-152	W, all compounds	8E+2	2E+1	1E-8	3E-11	1E-5	1E-4
63	Europium-154	W, all compounds	5E+2	2E+1	8E-9	3E-11	7E-6	7E-5
63	Europium-155	W, all compounds	4E+3	9E+1	4E-8	-	5E-5	5E-4
			-	Bone surf (1E+2)	-	2E-10	-	-
63	Europium-156	W, all compounds	6E+2	5E+2	2E-7	6E-10	8E-6	8E-5

Atomic No.	Radionuclide	Class	Table 1 Occupational Values: Col. 1 Oral Ingestion ALI (μCi)	Table 1 Occupational Values: Col. 2 Inhalation ALI (μCi)	Table 1 Occupational Values: Col. 3 Inhalation DAC (μCi/ml)	Table 2 Effluent Concentrations: Col. 1 Air (μCi/ml)	Table 2 Effluent Concentrations: Col. 2 Water (μCi/ml)	Table 3 Releases to Sewers: Monthly Average Concentration (μCi/ml)
63	Europium-157	W, all compounds	2E+3	5E+3	2E-6	7E-9	3E-5	3E-4
63	Europium-158[2]	W, all compounds	2E+4	6E+4	2E-5	8E-8	3E-4	3E-3
64	Gadolinium-145[2]	D, all compounds except those given for W	5E+4	2E+5	6E-5	2E-7	-	-
			St. wall (5E+4)	-	-	-	6E-4	6E-3
		W, oxides, hydroxides, and fluorides	-	2E+5	7E-5	2E-7	-	-
64	Gadolinium-146	D, see ^{145}Gd	1E+3	1E+2	5E-8	2E-10	2E-5	2E-4
		W, see ^{145}Gd	-	3E+2	1E-7	4E-10	-	-
64	Gadolinium-147	D, see ^{145}Gd	2E+3	4E+3	2E-6	6E-9	3E-5	3E-4
		W, see ^{145}Gd	-	4E+3	1E-6	5E-9	-	-
64	Gadolinium-148	D, see ^{145}Gd	1E+1	8E-3	3E-12	-	-	-
			Bone surf (2E+1)	Bone surf (2E-2)	-	2E-14	3E-7	3E-6
		W, see ^{145}Gd	-	3E-2	1E-11	-	-	-
			-	Bone surf (6E-2)	-	8E-14	-	-
64	Gadolinium-149	D, see ^{145}Gd	3E+3	2E+3	9E-7	3E-9	4E-5	4E-4
		W, see ^{145}Gd	-	2E+3	1E-6	3E-9	-	-
64	Gadolinium-151	D, see ^{145}Gd	6E+3	4E+2	2E-7	-	9E-5	9E-4
			-	Bone surf (6E+2)	-	9E-10	-	-
		W, see ^{145}Gd	-	1E+3	5E-7	2E-9	-	-
64	Gadolinium-152	D, see ^{145}Gd	2E+1	1E-2	4E-12	-	-	-
			Bone surf (3E+1)	Bone surf (2E-2)	-	3E-14	4E-7	4E-6
		W, see ^{145}Gd	-	4E-2	2E-11	-	-	-
			-	Bone surf (8E-2)	-	1E-13	-	-
64	Gadolinium-153	D, see ^{145}Gd	5E+3	1E+2	6E-8	-	6E-5	6E-4
			-	Bone surf (2E+2)	-	3E-10	-	-
		W, see ^{145}Gd	-	6E+2	2E-7	8E-10	-	-
64	Gadolinium-159	D, see ^{145}Gd	3E+3	8E+3	3E-6	1E-8	4E-5	4E-4
		W, see ^{145}Gd	-	6E+3	2E-6	8E-9	-	-
65	Terbium-147[2]	W, all compounds	9E+3	3E+4	1E-5	5E-8	1E-4	1E-3
65	Terbium-149	W, all compounds	5E+3	7E+2	3E-7	1E-9	7E-5	7E-4
65	Terbium-150	W, all compounds	5E+3	2E+4	9E-6	3E-8	7E-5	7E-4
65	Terbium-151	W, all compounds	4E+3	9E+3	4E-6	1E-8	5E-5	5E-4
65	Terbium-153	W, all compounds	5E+3	7E+3	3E-6	1E-8	7E-5	7E-4
65	Terbium-154	W, all compounds	2E+3	4E+3	2E-6	6E-9	2E-5	2E-4
65	Terbium-155	W, all compounds	6E+3	8E+3	3E-6	1E-8	8E-5	8E-4
65	Terbium-156m (5.0 h)	W, all compounds	2E+4	3E+4	1E-5	4E-8	2E-4	2E-3

58 FR 67657

58 FR 67657

Atomic No.	Radionuclide	Class	Table 1 Occupational Values Col. 1 Oral Ingestion ALI (μCi)	Col. 2 Inhalation ALI (μCi)	Col. 3 Inhalation DAC (μCi/ml)	Table 2 Effluent Concentrations Col. 1 Air (μCi/ml)	Col. 2 Water (μCi/ml)	Table 3 Releases to Sewers Monthly Average Concentration (μCi/ml)
65	Terbium-156m (24.4 h)	W, all compounds	7E+3	8E+3	3E-6	1E-8	1E-4	1E-3
65	Terbium-156	W, all compounds	1E+3	1E+3	6E-7	2E-9	1E-5	1E-4
65	Terbium-157	W, all compounds	5E+4	3E+2	1E-7	-	-	-
			LLI wall (5E+4)	Bone surf (6E+2)	-	8E-10	7E-4	7E-3
65	Terbium-158	W, all compounds	1E+3	2E+1	8E-9	3E-11	2E-5	2E-4
65	Terbium-160	W, all compounds	8E+2	2E+2	9E-8	3E-10	1E-5	1E-4
65	Terbium-161	W, all compounds	2E+3	2E+3	7E-7	2E-9	-	-
			LLI wall (2E+3)	-	-	-	3E-5	3E-4
66	Dysprosium-155	W, all compounds	9E+3	3E+4	1E-5	4E-8	1E-4	1E-3
66	Dysprosium-157	W, all compounds	2E+4	6E+4	3E-5	9E-8	3E-4	3E-3
66	Dysprosium-159	W, all compounds	1E+4	2E+3	1E-6	3E-9	2E-4	2E-3
66	Dysprosium-165	W, all compounds	1E+4	5E+4	2E-5	6E-8	2E-4	2E-3
66	Dysprosium-166	W, all compounds	6E+2	7E+2	3E-7	1E-9	-	-
			LLI wall (8E+2)	-	-	-	1E-5	1E-4
67	Holmium-155[2]	W, all compounds	4E+4	2E+5	6E-5	2E-7	6E-4	6E-3
67	Holmium-157[2]	W, all compounds	3E+5	1E+6	6E-4	2E-6	4E-3	4E-2
67	Holmium-159[2]	W, all compounds	2E+5	1E+6	4E-4	1E-6	3E-3	3E-2
67	Holmium-161	W, all compounds	1E+5	4E+5	2E-4	6E-7	1E-3	1E-2
67	Holmium-162m[2]	W, all compounds	5E+4	3E+5	1E-4	4E-7	7E-4	7E-3
67	Holmium-162[2]	W, all compounds	5E+5	2E+6	1E-3	3E-6	-	-
			St. wall (8E+5)	-	-	-	1E-2	1E-1
67	Holmium-164m[2]	W, all compounds	1E+5	3E+5	1E-4	4E-7	1E-3	1E-2
67	Holmium-164[2]	W, all compounds	2E+5	6E+5	3E-4	9E-7	-	-
			St. wall (2E+5)	-	-	-	3E-3	3E-2
67	Holmium-166m	W, all compounds	6E+2	7E+0	3E-9	9E-12	9E-6	9E-5
67	Holmium-166	W, all compounds	9E+2	2E+3	7E-7	2E-9	-	-
			LLI wall (9E+2)	-	-	-	1E-5	1E-4
67	Holmium-167	W, all compounds	2E+4	6E+4	2E-5	8E-8	2E-4	2E-3
68	Erbium-161	W, all compounds	2E+4	6E+4	3E-5	9E-8	2E-4	2E-3
68	Erbium-165	W, all compounds	6E+4	2E+5	8E-5	3E-7	9E-4	9E-3

58 FR 67657

Atomic No.	Radionuclide	Class	Table 1 Occupational Values: Col. 1 Oral Ingestion ALI (μCi)	Col. 2 Inhalation ALI (μCi)	Col. 3 Inhalation DAC (μCi/ml)	Table 2 Effluent Concentrations: Col. 1 Air (μCi/ml)	Col. 2 Water (μCi/ml)	Table 3 Releases to Sewers: Monthly Average Concentration (μCi/ml)
68	Erbium-169	W, all compounds	3E+3	3E+3	1E-6	4E-9	-	-
			LLI wall (4E+3)	-	-	-	5E-5	5E-4
68	Erbium-171	W, all compounds	4E+3	1E+4	4E-6	1E-8	5E-5	5E-4
68	Erbium-172	W, all compounds	1E+3	1E+3	6E-7	2E-9	-	-
			LLI wall (1E+3)	-	-	-	2E-5	2E-4
69	Thulium-162[2]	W, all compounds	7E+4	3E+5	1E-4	4E-7	-	-
			St. wall (7E+4)	-	-	-	1E-3	1E-2
69	Thulium-166	W, all compounds	4E+3	1E+4	6E-6	2E-8	6E-5	6E-4
69	Thulium-167	W, all compounds	2E+3	2E+3	8E-7	3E-9	-	-
			LLI wall (2E+3)	-	-	-	3E-5	3E-4
69	Thulium-170	W, all compounds	8E+2	2E+2	9E-8	3E-10	-	-
			LLI wall (1E+3)	-	-	-	1E-5	1E-4
69	Thulium-171	W, all compounds	1E+4	3E+2	1E-7	-	-	-
			LLI wall (1E+4)	Bone surf (6E+2)	-	8E-10	2E-4	2E-3
69	Thulium-172	W, all compounds	7E+2	1E+3	5E-7	2E-9	-	-
			LLI wall (8E+2)	-	-	-	1E-5	1E-4
69	Thulium-173	W, all compounds	4E+3	1E+4	5E-6	2E-8	6E-5	6E-4
69	Thulium-175[2]	W, all compounds	7E+4	3E+5	1E-4	4E-7	-	-
			St. wall (9E+4)	-	-	-	1E-3	1E-2
70	Ytterbium-162[2]	W, all compounds except those given for Y	7E+4	3E+5	1E-4	4E-7	1E-3	1E-2
		Y, oxides, hydroxides, and fluorides	-	3E+5	1E-4	4E-7	-	-
70	Ytterbium-166	W, see ^{162}Yb	1E+3	2E+3	8E-7	3E-9	2E-5	2E-4
		Y, see ^{162}Yb	-	2E+3	8E-7	3E-9	-	-
70	Ytterbium-167[2]	W, see ^{162}Yb	3E+5	8E+5	3E-4	1E-6	4E-3	4E-2
		Y, see ^{162}Yb	-	7E+5	3E-4	1E-6	-	-
70	Ytterbium-169	W, see ^{162}Yb	2E+3	8E+2	4E-7	1E-9	2E-5	2E-4
		Y, see ^{162}Yb	-	7E+2	3E-7	1E-9	-	-
70	Ytterbium-175	W, see ^{162}Yb	3E+3	4E+3	1E-6	5E-9	-	-
			LLI wall (3E+3)	-	-	-	4E-5	4E-4
		Y, see ^{162}Yb	-	3E+3	1E-6	5E-9	-	-
70	Ytterbium-177[2]	W, see ^{162}Yb	2E+4	5E+4	2E-5	7E-8	2E-4	2E-3
		Y, see ^{162}Yb	-	5E+4	2E-5	6E-8	-	-
70	Ytterbium-178[2]	W, see ^{162}Yb	1E+4	4E+4	2E-5	6E-8	2E-4	2E-3
		Y, see ^{162}Yb	-	4E+4	2E-5	5E-8	-	-

Atomic No.	Radionuclide	Class	Table 1 Occupational Values: Col. 1 Oral Ingestion ALI (μCi)	Col. 2 Inhalation ALI (μCi)	Col. 3 Inhalation DAC (μCi/ml)	Table 2 Effluent Concentrations: Col. 1 Air (μCi/ml)	Col. 2 Water (μCi/ml)	Table 3 Releases to Sewers: Monthly Average Concentration (μCi/ml)
71	Lutetium-169	W, all compounds except those given for Y	3E+3	4E+3	2E-6	6E-9	3E-5	3E-4
		Y, oxides, hydroxides, and fluorides	-	4E+3	2E-6	6E-9	-	-
71	Lutetium-170	W, see ^{169}Lu	1E+3	2E+3	9E-7	3E-9	2E-5	2E-4
		Y, see ^{169}Lu	-	2E+3	8E-7	3E-9	-	-
71	Lutetium-171	W, see ^{169}Lu	2E+3	2E+3	8E-7	3E-9	3E-5	3E-4
		Y, see ^{169}Lu	-	2E+3	8E-7	3E-9	-	-
71	Lutetium-172	W, see ^{169}Lu	1E+3	1E+3	5E-7	2E-9	1E-5	1E-4
		Y, see ^{169}Lu	-	1E+3	5E-7	2E-9	-	-
71	Lutetium-173	W, see ^{169}Lu	5E+3	3E+2	1E-7	-	7E-5	7E-4
			-	Bone surf (5E+2)	-	6E-10	-	-
		Y, see ^{169}Lu	-	3E+2	1E-7	4E-10	-	-
71	Lutetium-174m	W, see ^{169}Lu	2E+3	2E+2	1E-7	-	-	-
			LLI wall (3E+3)	Bone surf (3E+2)	-	5E-10	4E-5	4E-4
		Y, see ^{169}Lu	-	2E+2	9E-8	3E-10	-	-
71	Lutetium-174	W, see ^{169}Lu	5E+3	1E+2	5E-8	-	7E-5	7E-4
			-	Bone surf (2E+2)	-	3E-10	-	-
		Y, see ^{169}Lu	-	2E+2	6E-8	2E-10	-	-
71	Lutetium-176m	W, see ^{169}Lu	8E+3	3E+4	1E-5	3E-8	1E-4	1E-3
		Y, see ^{169}Lu	-	2E+4	9E-6	3E-8	-	-
71	Lutetium-176	W, see ^{169}Lu	7E+2	5E+0	2E-9	-	1E-5	1E-4
			-	Bone surf (1E+1)	-	2E-11	-	-
		Y, see ^{169}Lu	-	8E+0	3E-9	1E-11	-	-
71	Lutetium-177m	W, see ^{169}Lu	7E+2	1E+2	5E-8	-	1E-5	1E-4
			-	Bone surf (1E+2)	-	2E-10	-	-
		Y, see ^{169}Lu	-	8E+1	3E-8	1E-10	-	-
71	Lutetium-177	W, see ^{169}Lu	2E+3	2E+3	9E-7	3E-9	-	-
			LLI wall (3E+3)	-	-	-	4E-5	4E-4
		Y, see ^{169}Lu	-	2E+3	9E-7	3E-9	-	-
71	Lutetium-178m[2]	W, see ^{169}Lu	5E+4	2E+5	8E-5	3E-7	-	-
			St. wall (6E+4)	-	-	-	8E-4	8E-3
		Y, see ^{169}Lu	-	2E+5	7E-5	2E-7	-	-
71	Lutetium-178[2]	W, see ^{169}Lu	4E+4	1E+5	5E-5	2E-7	-	-
			St. wall (4E+4)	-	-	-	6E-4	6E-3
		Y, see ^{169}Lu	-	1E+5	5E-5	2E-7	-	-
71	Lutetium-179	W, see ^{169}Lu	6E+3	2E+4	8E-6	3E-8	9E-5	9E-4
		Y, see ^{169}Lu	-	2E+4	6E-6	3E-8	-	-

58 FR 67657

58 FR 67657

Atomic No.	Radionuclide	Class	Table 1 Occupational Values: Col. 1 Oral Ingestion ALI (µCi)	Col. 2 Inhalation ALI (µCi)	Col. 3 Inhalation DAC (µCi/ml)	Table 2 Effluent Concentrations: Col. 1 Air (µCi/ml)	Col. 2 Water (µCi/ml)	Table 3 Releases to Sewers: Monthly Average Concentration (µCi/ml)
72	Hafnium-170	D, all compounds except those given for W	3E+3	6E+3	2E-6	8E-9	4E-5	4E-4
		W, oxides, hydroxides, carbides, and nitrates	-	5E+3	2E-6	6E-9	-	-
72	Hafnium-172	D, see ^{170}Hf	1E+3	9E+0	4E-9	-	2E-5	2E-4
			-	Bone surf (2E+1)	-	3E-11	-	-
		W, see ^{170}Hf	-	4E+1	2E-8	-	-	-
			-	Bone surf (6E+1)	-	8E-11	-	-
72	Hafnium-173	D, see ^{170}Hf	5E+3	1E+4	5E-6	2E-8	7E-5	7E-4
		W, see ^{170}Hf	-	1E+4	5E-6	2E-8	-	-
72	Hafnium-175	D, see ^{170}Hf	3E+3	9E+2	4E-7	-	4E-5	4E-4
			-	Bone surf (1E+3)	-	1E-9	-	-
		W, see ^{170}Hf	-	1E+3	5E-7	2E-9	-	-
72	Hafnium-177m[2]	D, see ^{170}Hf	2E+4	6E+4	2E-5	8E-8	3E-4	3E-3
		W, see ^{170}Hf	-	9E+4	4E-5	1E-7	-	-
72	Hafnium-178m	D, see ^{170}Hf	3E+2	1E+0	5E-10	-	3E-6	3E-5
			-	Bone surf (2E+0)	-	3E-12	-	-
		W, see ^{170}Hf	-	5E+0	2E-9	-	-	-
			-	Bone surf (9E+0)	-	1E-11	-	-
72	Hafnium-179m	D, see ^{170}Hf	1E+3	3E+2	1E-7	-	1E-5	1E-4
			-	Bone surf (6E+2)	-	8E-10	-	-
		W, see ^{170}Hf	-	6E+2	3E-7	8E-10	-	-
72	Hafnium-180m	D, see ^{170}Hf	7E+3	2E+4	9E-6	3E-8	1E-4	1E-3
		W, see ^{170}Hf	-	3E+4	1E-5	4E-8	-	-
72	Hafnium-181	D, see ^{170}Hf	1E+3	2E+2	7E-8	-	2E-5	2E-4
			-	Bone surf (4E+2)	-	6E-10	-	-
		W, see ^{170}Hf	-	4E+2	2E-7	6E-10	-	-
72	Hafnium-182m[2]	D, see ^{170}Hf	4E+4	9E+4	4E-5	1E-7	5E-4	5E-3
		W, see ^{170}Hf	-	1E+5	6E-5	2E-7	-	-
72	Hafnium-182	D, see ^{170}Hf	2E+2	8E-1	3E-10	-	-	-
			Bone surf (4E+2)	Bone surf (2E+0)	-	2E-12	5E-6	5E-5
		W, see ^{170}Hf	-	3E+0	1E-9	-	-	-
			-	Bone surf (7E+0)	-	1E-11	-	-
72	Hafnium-183[2]	D, see ^{170}Hf	2E+4	5E+4	2E-5	6E-8	3E-4	3E-3
		W, see ^{170}Hf	-	6E+4	2E-5	8E-8	-	-
72	Hafnium-184	D, see ^{170}Hf	2E+3	8E+3	3E-6	1E-8	3E-5	3E-4
		W, see ^{170}Hf	-	6E+3	3E-6	9E-9	-	-

58 FR 67657

Atomic No.	Radionuclide	Class	Table 1 Occupational Values Col. 1 Oral Ingestion ALI (μCi)	Col. 2 Inhalation ALI (μCi)	Col. 3 Inhalation DAC (μCi/ml)	Table 2 Effluent Concentrations Col. 1 Air (μCi/ml)	Col. 2 Water (μCi/ml)	Table 3 Releases to Sewers Monthly Average Concentration (μCi/ml)
73	Tantalum-172[2]	W, all compounds except those given for Y	4E+4	1E+5	5E-5	2E-7	5E-4	5E-3
		Y, elemental Ta, oxides, hydroxides, halides, carbides, nitrates, and nitrides	-	1E+5	4E-5	1E-7	-	-
73	Tantalum-173	W, see ^{172}Ta	7E+3	2E+4	8E-6	3E-8	9E-5	9E-4
		Y, see ^{172}Ta	-	2E+4	7E-6	2E-8	-	-
73	Tantalum-174[2]	W, see ^{172}Ta	3E+4	1E+5	4E-5	1E-7	4E-4	4E-3
		Y, see ^{172}Ta	-	9E+4	4E-5	1E-7	-	-
73	Tantalum-175	W, see ^{172}Ta	6E+3	2E+4	7E-6	2E-8	8E-5	8E-4
		Y, see ^{172}Ta	-	1E+4	6E-6	2E-8	-	-
73	Tantalum-176	W, see ^{172}Ta	4E+3	1E+4	5E-6	2E-8	5E-5	5E-4
		Y, see ^{172}Ta	-	1E+4	5E-6	2E-8	-	-
73	Tantalum-177	W, see ^{172}Ta	1E+4	2E+4	8E-6	3E-8	2E-4	2E-3
		Y, see ^{172}Ta	-	2E+4	7E-6	2E-8	-	-
73	Tantalum-178	W, see ^{172}Ta	2E+4	9E+4	4E-5	1E-7	2E-4	2E-3
		Y, see ^{172}Ta	-	7E+4	3E-5	1E-7	-	-
73	Tantalum-179	W, see ^{172}Ta	2E+4	5E+3	2E-6	8E-9	3E-4	3E-3
		Y, see ^{172}Ta	-	9E+2	4E-7	1E-9	-	-
73	Tantalum-180m	W, see ^{172}Ta	2E+4	7E+4	3E-5	9E-8	3E-4	3E-3
		Y, see ^{172}Ta	-	6E+4	2E-5	8E-8	-	-
73	Tantalum-180	W, see ^{172}Ta	1E+3	4E+2	2E-7	6E-10	2E-5	2E-4
		Y, see ^{172}Ta	-	2E+1	1E-8	3E-11	-	-
73	Tantalum-182m[2]	W, see ^{172}Ta	2E+5	5E+5	2E-4	8E-7	-	-
			St. wall (2E+5)	-	-	-	3E-3	3E-2
		Y, see ^{172}Ta	-	4E+5	2E-4	6E-7	-	-
73	Tantalum-182	W, see ^{172}Ta	8E+2	3E+2	1E-7	5E-10	1E-5	1E-4
		Y, see ^{172}Ta	-	1E+2	6E-8	2E-10	-	-
73	Tantalum-183	W, see ^{172}Ta	9E+2	1E+3	5E-7	2E-9	-	-
			LLI wall (1E+3)	-	-	-	2E-5	2E-4
		Y, see ^{172}Ta	-	1E+3	4E-7	1E-9	-	-
73	Tantalum-184	W, see ^{172}Ta	2E+3	5E+3	2E-6	8E-9	3E-5	3E-4
		Y, see ^{172}Ta	-	5E+3	2E-6	7E-9	-	-
73	Tantalum-185[2]	W, see ^{172}Ta	3E+4	7E+4	3E-5	1E-7	4E-4	4E-3
		Y, see ^{172}Ta	-	6E+4	3E-5	9E-8	-	-
73	Tantalum-186[2]	W, see ^{172}Ta	5E+4	2E+5	1E-4	3E-7	-	-
			St. wall (7E+4)	-	-	-	1E-3	1E-2
		Y, see ^{172}Ta	-	2E+5	9E-5	3E-7	-	-
74	Tungsten-176	D, all compounds	1E+4	5E+4	2E-5	7E-8	1E-4	1E-3
74	Tungsten-177	D, all compounds	2E+4	9E+4	4E-5	1E-7	3E-4	3E-3

Atomic No.	Radionuclide	Class	Table 1 Occupational Values: Col. 1 Oral Ingestion ALI (μCi)	Col. 2 Inhalation ALI (μCi)	Col. 3 Inhalation DAC (μCi/ml)	Table 2 Effluent Concentrations: Col. 1 Air (μCi/ml)	Col. 2 Water (μCi/ml)	Table 3 Releases to Sewers: Monthly Average Concentration (μCi/ml)
74	Tungsten-178	D, all compounds	5E+3	2E+4	8E-6	3E-8	7E-5	7E-4
74	Tungsten-179[2]	D, all compounds	5E+5	2E+6	7E-4	2E-6	7E-3	7E-2
74	Tungsten-181	D, all compounds	2E+4	3E+4	1E-5	5E-8	2E-4	2E-3
74	Tungsten-185	D, all compounds	2E+3	7E+3	3E-6	9E-9	-	-
			LLI wall (3E+3)	-	-	-	4E-5	4E-4
74	Tungsten-187	D, all compounds	2E+3	9E+3	4E-6	1E-8	3E-5	3E-4
74	Tungsten-188	D, all compounds	4E+2	1E+3	5E-7	2E-9	-	-
			LLI wall (5E+2)	-	-	-	7E-6	7E-5
75	Rhenium-177[2]	D, all compounds except those given for W	9E+4	3E+5	1E-4	4E-7	-	-
			St. wall (1E+5)	-	-	-	2E-3	2E-2
		W, oxides, hydroxides, and nitrates	-	4E+5	1E-4	5E-7	-	-
75	Rhenium-178[2]	D, see ^{177}Re	7E+4	3E+5	1E-4	4E-7	-	-
			St. wall (1E+5)	-	-	-	1E-3	1E-2
		W, see ^{177}Re	-	3E+5	1E-4	4E-7	-	-
75	Rhenium-181	D, see ^{177}Re	5E+3	9E+3	4E-6	1E-8	7E-5	7E-4
		W, see ^{177}Re	-	9E+3	4E-6	1E-8	-	-
75	Rhenium-182 (12.7 h)	D, see ^{177}Re	7E+3	1E+4	5E-6	2E-8	9E-5	9E-4
		W, see ^{177}Re	-	2E+4	6E-6	2E-8	-	-
75	Rhenium-182 (64.0 h)	D, see ^{177}Re	1E+3	2E+3	1E-6	3E-9	2E-5	2E-4
		W, see ^{177}Re	-	2E+3	9E-7	3E-9	-	-
75	Rhenium-184m	D, see ^{177}Re	2E+3	3E+3	1E-6	4E-9	3E-5	3E-4
		W, see ^{177}Re	-	4E+2	2E-7	6E-10	-	-
75	Rhenium-184	D, see ^{177}Re	2E+3	4E+3	1E-6	5E-9	3E-5	3E-4
		W, see ^{177}Re	-	1E+3	6E-7	2E-9	-	-
75	Rhenium-186m	D, see ^{177}Re	1E+3	2E+3	7E-7	-	-	-
			St. wall (2E+3)	St. wall (2E+3)	-	3E-9	2E-5	2E-4
		W, see ^{177}Re	-	2E+2	6E-8	2E-10	-	-
75	Rhenium-186	D, see ^{177}Re	2E+3	3E+3	1E-6	4E-9	3E-5	3E-4
		W, see ^{177}Re	-	2E+3	7E-7	2E-9	-	-
75	Rhenium-187	D, see ^{177}Re	6E+5	8E+5	4E-4	-	8E-3	8E-2
			-	St. wall (9E+5)	-	1E-6	-	-
		W, see ^{177}Re	-	1E+5	4E-5	1E-7	-	-
75	Rhenium-188m[2]	D, see ^{177}Re	8E+4	1E+5	6E-5	2E-7	1E-3	1E-2
		W, see ^{177}Re	-	1E+5	6E-5	2E-7	-	-
75	Rhenium-188	D, see ^{177}Re	2E+3	3E+3	1E-6	4E-9	2E-5	2E-4
		W, see ^{177}Re	-	3E+3	1E-6	4E-9	-	-

58 FR 67657

58 FR 67657

Atomic No.	Radionuclide	Class	Table 1 Occupational Values: Col. 1 Oral Ingestion ALI (μCi)	Col. 2 Inhalation ALI (μCi)	Col. 3 Inhalation DAC (μCi/ml)	Table 2 Effluent Concentrations: Col. 1 Air (μCi/ml)	Col. 2 Water (μCi/ml)	Table 3 Releases to Sewers: Monthly Average Concentration (μCi/ml)
75	Rhenium-189	D, see ^{177}Re	3E+3	5E+3	2E-6	7E-9	4E-5	4E-4
		W, see ^{177}Re	-	4E+3	2E-6	6E-9	-	-
76	Osmium-180[2]	D, all compounds except those given for W and Y	1E+5	4E+5	2E-4	5E-7	1E-3	1E-2
		W, halides and nitrates	-	5E+5	2E-4	7E-7	-	-
		Y, oxides and hydroxides	-	5E+5	2E-4	6E-7	-	-
76	Osmium-181[2]	D, see ^{180}Os	1E+4	4E+4	2E-5	6E-8	2E-4	2E-3
		W, see ^{180}Os	-	5E+4	2E-5	6E-8	-	-
		Y, see ^{180}Os	-	4E+4	2E-5	6E-8	-	-
76	Osmium-182	D, see ^{180}Os	2E+3	6E+3	2E-6	8E-9	3E-5	3E-4
		W, see ^{180}Os	-	4E+3	2E-6	6E-9	-	-
		Y, see ^{180}Os	-	4E+3	2E-6	6E-9	-	-
76	Osmium-185	D, see ^{180}Os	2E+3	5E+2	2E-7	7E-10	3E-5	3E-4
		W, see ^{180}Os	-	8E+2	3E-7	1E-9	-	-
		Y, see ^{180}Os	-	8E+2	3E-7	1E-9	-	-
76	Osmium-189m	D, see ^{180}Os	8E+4	2E+5	1E-4	3E-7	1E-3	1E-2
		W, see ^{180}Os	-	2E+5	9E-5	3E-7	-	-
		Y, see ^{180}Os	-	2E+5	7E-5	2E-7	-	-
76	Osmium-191m	D, see ^{180}Os	1E+4	3E+4	1E-5	4E-8	2E-4	2E-3
		W, see ^{180}Os	-	2E+4	8E-6	3E-8	-	-
		Y, see ^{180}Os	-	2E+4	7E-6	2E-8	-	-
76	Osmium-191	D, see ^{180}Os	2E+3	2E+3	9E-7	3E-9	-	-
			LLI wall (3E+3)	-	-	-	3E-5	3E-4
		W, see ^{180}Os	-	2E+3	7E-7	2E-9	-	-
		Y, see ^{180}Os	-	1E+3	6E-7	2E-9	-	-
76	Osmium-193	D, see ^{180}Os	2E+3	5E+3	2E-6	6E-9	-	-
			LLI wall (2E+3)	-	-	-	2E-5	2E-4
		W, see ^{180}Os	-	3E+3	1E-6	4E-9	-	-
		Y, see ^{180}Os	-	3E+3	1E-6	4E-9	-	-
76	Osmium-194	D, see ^{180}Os	4E+2	4E+1	2E-8	6E-11	-	-
			LLI wall (6E+2)	-	-	-	8E-6	8E-5
		W, see ^{180}Os	-	6E+1	2E-8	8E-11	-	-
		Y, see ^{180}Os	-	8E+0	3E-9	1E-11	-	-
77	Iridium-182[2]	D, all compounds except those given for W and Y	4E+4	1E+5	6E-5	2E-7	-	-
			St. wall (4E+4)	-	-	-	6E-4	6E-3
		W, halides, nitrates, and metallic iridium	-	2E+5	6E-5	2E-7	-	-
		Y, oxides and hydroxides	-	1E+5	5E-5	2E-7	-	-
77	Iridium-184	D, see ^{182}Ir	8E+3	2E+4	1E-5	3E-8	1E-4	1E-3
		W, see ^{182}Ir	-	3E+4	1E-5	5E-8	-	-
		Y, see ^{182}Ir	-	3E+4	1E-5	4E-8	-	-

58 FR 67657

Atomic No.	Radionuclide	Class	Table 1 Occupational Values: Col. 1 Oral Ingestion ALI (μCi)	Col. 2 Inhalation ALI (μCi)	Col. 3 Inhalation DAC (μCi/ml)	Table 2 Effluent Concentrations: Col. 1 Air (μCi/ml)	Col. 2 Water (μCi/ml)	Table 3 Releases to Sewers: Monthly Average Concentration (μCi/ml)
77	Iridium-185	D, see ^{182}Ir	5E+3	1E+4	5E-6	2E-8	7E-5	7E-4
		W, see ^{182}Ir	-	1E+4	5E-6	2E-8	-	-
		Y, see ^{182}Ir	-	1E+4	4E-6	1E-8	-	-
77	Iridium-186	D, see ^{182}Ir	2E+3	8E+3	3E-6	1E-8	3E-5	3E-4
		W, see ^{182}Ir	-	6E+3	3E-6	9E-9	-	-
		Y, see ^{182}Ir	-	6E+3	2E-6	8E-9	-	-
77	Iridium-187	D, see ^{182}Ir	1E+4	3E+4	1E-5	5E-8	1E-4	1E-3
		W, see ^{182}Ir	-	3E+4	1E-5	4E-8	-	-
		Y, see ^{182}Ir	-	3E+4	1E-5	4E-8	-	-
77	Iridium-188	D, see ^{182}Ir	2E+3	5E+3	2E-6	6E-9	3E-5	3E-4
		W, see ^{182}Ir	-	4E+3	1E-6	5E-9	-	-
		Y, see ^{182}Ir	-	3E+3	1E-6	5E-9	-	-
77	Iridium-189	D, see ^{182}Ir	5E+3	5E+3	2E-6	7E-9	-	-
			LLI wall (5E+3)	-	-	-	7E-5	7E-4
		W, see ^{182}Ir	-	4E+3	2E-6	5E-9	-	-
		Y, see ^{182}Ir	-	4E+3	1E-6	5E-9	-	-
77	Iridium-190m[2]	D, see ^{182}Ir	2E+5	2E+5	8E-5	3E-7	2E-3	2E-2
		W, see ^{182}Ir	-	2E+5	9E-5	3E-7	-	-
		Y, see ^{182}Ir	-	2E+5	8E-5	3E-7	-	-
77	Iridium-190	D, see ^{182}Ir	1E+3	9E+2	4E-7	1E-9	1E-5	1E-4
		W, see ^{182}Ir	-	1E+3	4E-7	1E-9	-	-
		Y, see ^{182}Ir	-	9E+2	4E-7	1E-9	-	-
77	Iridium-192m	D, see ^{182}Ir	3E+3	9E+1	4E-8	1E-10	4E-5	4E-4
		W, see ^{182}Ir	-	2E+2	9E-8	3E-10	-	-
		Y, see ^{182}Ir	-	2E+1	6E-9	2E-11	-	-
77	Iridium-192	D, see ^{182}Ir	9E+2	3E+2	1E-7	4E-10	1E-5	1E-4
		W, see ^{182}Ir	-	4E+2	2E-7	6E-10	-	-
		Y, see ^{182}Ir	-	2E+2	9E-8	3E-10	-	-
77	Iridium-194m	D, see ^{182}Ir	6E+2	9E+1	4E-8	1E-10	9E-6	9E-5
		W, see ^{182}Ir	-	2E+2	7E-8	2E-10	-	-
		Y, see ^{182}Ir	-	1E+2	4E-8	1E-10	-	-
77	Iridium-194	D, see ^{182}Ir	1E+3	3E+3	1E-6	4E-9	1E-5	1E-4
		W, see ^{182}Ir	-	2E+3	9E-7	3E-9	-	-
		Y, see ^{182}Ir	-	2E+3	8E-7	3E-9	-	-
77	Iridium-195m	D, see ^{182}Ir	8E+3	2E+4	1E-5	3E-8	1E-4	1E-3
		W, see ^{182}Ir	-	3E+4	1E-5	4E-8	-	-
		Y, see ^{182}Ir	-	2E+4	9E-6	3E-8	-	-
77	Iridium-195	D, see ^{182}Ir	1E+4	4E+4	2E-5	6E-8	2E-4	2E-3
		W, see ^{182}Ir	-	5E+4	2E-5	7E-8	-	-
		Y, see ^{182}Ir	-	4E+4	2E-5	6E-8	-	-
78	Platinum-186	D, all compounds	1E+4	4E+4	2E-5	5E-8	2E-4	2E-3
78	Platinum-188	D, all compounds	2E+3	2E+3	7E-7	2E-9	2E-5	2E-4
78	Platinum-189	D, all compounds	1E+4	3E+4	1E-5	4E-8	1E-4	1E-3
78	Platinum-191	D, all compounds	4E+3	8E+3	4E-6	1E-8	5E-5	5E-4

Atomic No.	Radionuclide	Class	Table 1 Occupational Values: Col. 1 Oral Ingestion ALI (μCi)	Col. 2 Inhalation ALI (μCi)	Col. 3 Inhalation DAC (μCi/ml)	Table 2 Effluent Concentrations: Col. 1 Air (μCi/ml)	Col. 2 Water (μCi/ml)	Table 3 Releases to Sewers: Monthly Average Concentration (μCi/ml)
78	Platinum-193m	D, all compounds	3E+3	6E+3	3E-6	8E-9	-	-
			LLI wall (3E+4)	-	-	-	4E-5	4E-4
78	Platinum-193	D, all compounds	4E+4	2E+4	1E-5	3E-8	-	-
			LLI wall (5E+4)	-	-	-	6E-4	6E-3
78	Platinum-195m	D, all compounds	2E+3	4E+3	2E-6	6E-9	-	-
			LLI wall (2E+3)	-	-	-	3E-5	3E-4
78	Platinum-197m[2]	D, all compounds	2E+4	4E+4	2E-5	6E-8	2E-4	2E-3
78	Platinum-197	D, all compounds	3E+3	1E+4	4E-6	1E-8	4E-5	4E-4
78	Platinum-199[2]	D, all compounds	5E+4	1E+5	6E-5	2E-7	7E-4	7E-3
78	Platinum-200	D, all compounds	1E+3	3E+3	1E-6	5E-9	2E-5	2E-4
79	Gold-193	D, all compounds except those given for W and Y	9E+3	3E+4	1E-5	4E-8	1E-4	1E-3
		W, halides and nitrates	-	2E+4	9E-6	3E-8	-	-
		Y, oxides and hydroxides	-	2E+4	8E-6	3E-8	-	-
79	Gold-194	D, see ^{193}Au	3E+3	8E+3	3E-6	1E-8	4E-5	4E-4
		W, see ^{193}Au	-	5E+3	2E-6	8E-9	-	-
		Y, see ^{193}Au	-	5E+3	2E-6	7E-9	-	-
79	Gold-195	D, see ^{193}Au	5E+3	1E+4	5E-6	2E-8	7E-5	7E-4
		W, see ^{193}Au	-	1E+3	6E-7	2E-9	-	-
		Y, see ^{193}Au	-	4E+2	2E-7	6E-10	-	-
79	Gold-198m	D, see ^{193}Au	1E+3	3E+3	1E-6	4E-9	1E-5	1E-4
		W, see ^{193}Au	-	1E+3	5E-7	2E-9	-	-
		Y, see ^{193}Au	-	1E+3	5E-7	2E-9	-	-
79	Gold-198	D, see ^{193}Au	1E+3	4E+3	2E-6	5E-9	2E-5	2E-4
		W, see ^{193}Au	-	2E+3	8E-7	3E-9	-	-
		Y, see ^{193}Au	-	2E+3	7E-7	2E-9	-	-
79	Gold-199	D, see ^{193}Au	3E+3	9E+3	4E-6	1E-8	-	-
			LLI wall (3E+3)	-	-	-	4E-5	4E-4
		W, see ^{193}Au	-	4E+3	2E-6	6E-9	-	-
		Y, see ^{193}Au	-	4E+3	2E-6	5E-9	-	-
79	Gold-200m	D, see ^{193}Au	1E+3	4E+3	1E-6	5E-9	2E-5	2E-4
		W, see ^{193}Au	-	3E+3	1E-6	4E-9	-	-
		Y, see ^{193}Au	-	2E+4	1E-6	3E-9	-	-
79	Gold-200[2]	D, see ^{193}Au	3E+4	6E+4	3E-5	9E-8	4E-4	4E-3
		W, see ^{193}Au	-	8E+4	3E-5	1E-7	-	-
		Y, see ^{193}Au	-	7E+4	3E-5	1E-7	-	-
79	Gold-201[2]	D, see ^{193}Au	7E+4	2E+5	9E-5	3E-7	-	-
			St. wall (9E+4)	-	-	-	1E-3	1E-2
		W, see ^{193}Au	-	2E+5	1E-4	3E-7	-	-
		Y, see ^{193}Au	-	2E+5	9E-5	3E-7	-	-

58 FR 67657

Atomic No.	Radionuclide	Class	Table 1 Occupational Values: Col. 1 Oral Ingestion ALI (μCi)	Col. 2 Inhalation ALI (μCi)	Col. 3 Inhalation DAC (μCi/ml)	Table 2 Effluent Concentrations: Col. 1 Air (μCi/ml)	Col. 2 Water (μCi/ml)	Table 3 Releases to Sewers: Monthly Average Concentration (μCi/ml)
80	Mercury-193m	Vapor	-	8E+3	4E-6	1E-8	-	-
		Organic D	4E+3	1E+4	5E-6	2E-8	6E-5	6E-4
		D, sulfates	3E+3	9E+3	4E-6	1E-8	4E-5	4E-4
		W, oxides, hydroxides, halides, nitrates, and sulfides	-	8E+3	3E-6	1E-8	-	-
80	Mercury-193	Vapor	-	3E+4	1E-5	4E-8	-	-
		Organic D	2E+4	6E+4	3E-5	9E-8	3E-4	3E-3
		D, see ^{193m}Hg	2E+4	4E+4	2E-5	6E-8	2E-4	2E-3
		W, see ^{193m}Hg	-	4E+4	2E-5	6E-8	-	-
80	Mercury-194	Vapor	-	3E+1	1E-8	4E-11	-	-
		Organic D	2E+1	3E+1	1E-8	4E-11	2E-7	2E-6
		D, see ^{193m}Hg	8E+2	4E+1	2E-8	6E-11	1E-5	1E-4
		W, see ^{193m}Hg	-	1E+2	5E-8	2E-10	-	-
80	Mercury-195m	Vapor	-	4E+3	2E-6	6E-9	-	-
		Organic D	3E+3	6E+3	3E-6	8E-9	4E-5	4E-4
		D, see ^{193m}Hg	2E+3	5E+3	2E-6	7E-9	3E-5	3E-4
		W, see ^{193m}Hg	-	4E+3	2E-6	5E-9	-	-
80	Mercury-195	Vapor	-	3E+4	1E-5	4E-8	-	-
		Organic D	2E+4	5E+4	2E-5	6E-8	2E-4	2E-3
		D, see ^{193m}Hg	1E+4	4E+4	1E-5	5E-8	2E-4	2E-3
		W, see ^{193m}Hg	-	3E+4	1E-5	5E-8	-	-
80	Mercury-197m	Vapor	-	5E+3	2E-6	7E-9	-	-
		Organic D	4E+3	9E+3	4E-6	1E-8	5E-5	5E-4
		D, see ^{193m}Hg	3E+3	7E+3	3E-6	1E-8	4E-5	4E-4
		W, see ^{193m}Hg	-	5E+3	2E-6	7E-9	-	-
80	Mercury-197	Vapor	-	8E+3	4E-6	1E-8	-	-
		Organic D	7E+3	1E+4	6E-6	2E-8	9E-5	9E-4
		D, see ^{193m}Hg	6E+3	1E+4	5E-6	2E-8	8E-5	8E-4
		W, see ^{193m}Hg	-	9E+3	4E-6	1E-8	-	-
80	Mercury-199m[2]	Vapor	-	8E+4	3E-5	1E-7	-	-
		Organic D	6E+4	2E+5	7E-5	2E-7	-	-
			St. wall (1E+5)	-	-	-	1E-3	1E-2
		D, see ^{193m}Hg	6E+4	1E+5	6E-5	2E-7	8E-4	8E-3
		W, see ^{193m}Hg	-	2E+5	7E-5	2E-7	-	-
80	Mercury-203	Vapor	-	8E+2	4E-7	1E-9	-	-
		Organic D	5E+2	8E+2	3E-7	1E-9	7E-6	7E-5
		D, see ^{193m}Hg	2E+3	1E+3	5E-7	2E-9	3E-5	3E-4
		W, see ^{193m}Hg	-	1E+3	5E-7	2E-9	-	-
81	Thallium-194m[2]	D, all compounds	5E+4	2E+5	6E-5	2E-7	-	-
			St. wall (7E+4)	-	-	-	1E-3	1E-2

58 FR 67657

58 FR 67657

Atomic No.	Radionuclide	Class	Table 1 Occupational Values Col. 1 Oral Ingestion ALI (μCi)	Col. 2 Inhalation ALI (μCi)	Col. 3 Inhalation DAC (μCi/ml)	Table 2 Effluent Concentrations Col. 1 Air (μCi/ml)	Col. 2 Water (μCi/ml)	Table 3 Releases to Sewers Monthly Average Concentration (μCi/ml)
81	Thallium-194[2]	D, all compounds	3E+5	6E+5	2E-4	8E-7	-	-
			St. wall (3E+5)	-	-	-	4E-3	4E-2
81	Thallium-195[2]	D, all compounds	6E+4	1E+5	5E-5	2E-7	9E-4	9E-3
81	Thallium-197	D, all compounds	7E+4	1E+5	5E-5	2E-7	1E-3	1E-2
81	Thallium-198m[2]	D, all compounds	3E+4	5E+4	2E-5	8E-8	4E-4	4E-3
81	Thallium-198	D, all compounds	2E+4	3E+4	1E-5	5E-8	3E-4	3E-3
81	Thallium-199	D, all compounds	6E+4	8E+4	4E-5	1E-7	9E-4	9E-3
81	Thallium-200	D, all compounds	8E+3	1E+4	5E-6	2E-8	1E-4	1E-3
81	Thallium-201	D, all compounds	2E+4	2E+4	9E-6	3E-8	2E-4	2E-3
81	Thallium-202	D, all compounds	4E+3	5E+3	2E-6	7E-9	5E-5	5E-4
81	Thallium-204	D, all compounds	2E+3	2E+3	9E-7	3E-9	2E-5	2E-4
82	Lead-195m[2]	D, all compounds	6E+4	2E+5	8E-5	3E-7	8E-4	8E-3
82	Lead-198	D, all compounds	3E+4	6E+4	3E-5	9E-8	4E-4	4E-3
82	Lead-199[2]	D, all compounds	2E+4	7E+4	3E-5	1E-7	3E-4	3E-3
82	Lead-200	D, all compounds	3E+3	6E+3	3E-6	9E-9	4E-5	4E-4
82	Lead-201	D, all compounds	7E+3	2E+4	8E-6	3E-8	1E-4	1E-3
82	Lead-202m	D, all compounds	9E+3	3E+4	1E-5	4E-8	1E-4	1E-3
82	Lead-202	D, all compounds	1E+2	5E+1	2E-8	7E-11	2E-6	2E-5
82	Lead-203	D, all compounds	5E+3	9E+3	4E-6	1E-8	7E-5	7E-4
82	Lead-205	D, all compounds	4E+3	1E+3	6E-7	2E-9	5E-5	5E-4
82	Lead-209	D, all compounds	2E+4	6E+4	2E-5	8E-8	3E-4	3E-3
82	Lead-210	D, all compounds	6E-1	2E-1	1E-10	-	-	-
			Bone surf (1E+0)	Bone surf (4E-1)	-	6E-13	1E-8	1E-7
82	Lead-211[2]	D, all compounds	1E+4	6E+2	3E-7	9E-10	2E-4	2E-3
82	Lead-212	D, all compounds	8E+1	3E+1	1E-8	5E-11	-	-
			Bone surf (1E+2)	-	-	-	2E-6	2E-5
82	Lead-214[2]	D, all compounds	9E+3	8E+2	3E-7	1E-9	1E-4	1E-3
83	Bismuth-200[2]	D, nitrates	3E+4	8E+4	4E-5	1E-7	4E-4	4E-3
		W, all other compounds	-	1E+5	4E-5	1E-7	-	-
83	Bismuth-201[2]	D, see ^{200}Bi	1E+4	3E+4	1E-5	4E-8	2E-4	2E-3
		W, see ^{200}Bi	-	4E+4	2E-5	5E-8	-	-
83	Bismuth-202[2]	D, see ^{200}Bi	1E+4	4E+4	2E-5	6E-8	2E-4	2E-3
		W, see ^{200}Bi	-	8E+4	3E-5	1E-7	-	-

58 FR 67657

Atomic No.	Radionuclide	Class	Table 1 Occupational Values: Col. 1 Oral Ingestion ALI (μCi)	Table 1: Col. 2 Inhalation ALI (μCi)	Table 1: Col. 3 Inhalation DAC (μCi/ml)	Table 2 Effluent Concentrations: Col. 1 Air (μCi/ml)	Table 2: Col. 2 Water (μCi/ml)	Table 3 Releases to Sewers: Monthly Average Concentration (μCi/ml)
83	Bismuth-203	D, see ^{200}Bi	2E+3	7E+3	3E-6	9E-9	3E-5	3E-4
		W, see ^{200}Bi	-	6E+3	3E-6	9E-9	-	-
83	Bismuth-205	D, see ^{200}Bi	1E+3	3E+3	1E-6	3E-9	2E-5	2E-4
		W, see ^{200}Bi	-	1E+3	5E-7	2E-9	-	-
83	Bismuth-206	D, see ^{200}Bi	6E+2	1E+3	6E-7	2E-9	9E-6	9E-5
		W, see ^{200}Bi	-	9E+2	4E-7	1E-9	-	-
83	Bismuth-207	D, see ^{200}Bi	1E+3	2E+3	7E-7	2E-9	1E-5	1E-4
		W, see ^{200}Bi	-	4E+2	1E-7	5E-10	-	-
83	Bismuth-210m	D, see ^{200}Bi	4E+1	5E+0	2E-9	-	-	-
			Kidneys (6E+1)	Kidneys (6E+0)	-	9E-12	8E-7	8E-6
		W, see ^{200}Bi	-	7E-1	3E-10	9E-13	-	-
83	Bismuth-210	D, see ^{200}Bi	8E+2	2E+2	1E-7	-	1E-5	1E-4
			-	Kidneys (4E+2)	-	5E-10	-	-
		W, see ^{200}Bi	-	3E+1	1E-8	4E-11	-	-
83	Bismuth-212[2]	D, see ^{200}Bi	5E+3	2E+2	1E-7	3E-10	7E-5	7E-4
		W, see ^{200}Bi	-	3E+2	1E-7	4E-10	-	-
83	Bismuth-213[2]	D, see ^{200}Bi	7E+3	3E+2	1E-7	4E-10	1E-4	1E-3
		W, see ^{200}Bi	-	4E+2	1E-7	5E-10	-	-
83	Bismuth-214[2]	D, see ^{200}Bi	2E+4	8E+2	3E-7	1E-9	-	-
			St. wall (2E+4)	-	-	-	3E-4	3E-3
		W, see ^{200}Bi	-	9E-2	4E-7	1E-9	-	-
84	Polonium-203[2]	D, all compounds except those given for W	3E+4	6E+4	3E-5	9E-8	3E-4	3E-3
		W, oxides, hydroxides, and nitrates	-	9E+4	4E-5	1E-7	-	-
84	Polonium-205[2]	D, see ^{203}Po	2E+4	4E+4	2E-5	5E-8	3E-4	3E-3
		W, see ^{203}Po	-	7E+4	3E-5	1E-7	-	-
84	Polonium-207	D, see ^{203}Po	8E+3	3E+4	1E-5	3E-8	1E-4	1E-3
		W, see ^{203}Po	-	3E+4	1E-5	4E-8	-	-
84	Polonium-210	D, see ^{203}Po	3E+0	6E-1	3E-10	9E-13	4E-8	4E-7
		W, see ^{203}Po	-	6E-1	3E-10	9E-13	-	-
85	Astatine-207[2]	D, halides	6E+3	3E+3	1E-6	4E-9	8E-5	8E-4
		W	-	2E+3	9E-7	3E-9	-	-
85	Astatine-211	D, halides	1E+2	8E+1	3E-8	1E-10	2E-6	2E-5
		W	-	5E+1	2E-8	8E-11	-	-
86	Radon-220	With daughters removed	-	2E+4	7E-6	2E-8	-	-
		With daughters present	-	2E+1 (or 12 working level months)	9E-9 (or 1.0 working level)	3E-11	-	-

58 FR 67657

Atomic No.	Radionuclide	Class	Table 1 Occupational Values: Col. 1 Oral Ingestion ALI (μCi)	Col. 2 Inhalation ALI (μCi)	Col. 3 Inhalation DAC (μCi/ml)	Table 2 Effluent Concentrations: Col. 1 Air (μCi/ml)	Col. 2 Water (μCi/ml)	Table 3 Releases to Sewers: Monthly Average Concentration (μCi/ml)
86	Radon-222	With daughters removed	-	1E+4	4E-6	1E-8	-	-
		With daughters present	-	1E+2 (or 4 working level months)	3E-8 (or 0.33 working level)	1E-10	-	-
87	Francium-222[2]	D, all compounds	2E+3	5E+2	2E-7	6E-10	3E-5	3E-4
87	Francium-223[2]	D, all compounds	6E+2	8E+2	3E-7	1E-9	8E-6	8E-5
88	Radium-223	W, all compounds	5E+0	7E-1	3E-10	9E-13	-	-
			Bone surf (9E+0)	-	-	-	1E-7	1E-6
88	Radium-224	W, all compounds	8E+0	2E+0	7E-10	2E-12	-	-
			Bone surf (2E+1)	-	-	-	2E-7	2E-6
88	Radium-225	W, all compounds	8E+0	7E-1	3E-10	9E-13	-	-
			Bone surf (2E+1)	-	-	-	2E-7	2E-6
88	Radium-226	W, all compounds	2E+0	6E-1	3E-10	9E-13	-	-
			Bone surf (5E+0)	-	-	-	6E-8	6E-7
88	Radium-227[2]	W, all compounds	2E+4	1E+4	6E-6	-	-	-
			Bone surf (2E+4)	Bone surf (2E+4)	-	3E-8	3E-4	3E-3
88	Radium-228	W, all compounds	2E+0	1E+0	5E-10	2E-12	-	-
			Bone surf (4E+0)	-	-	-	6E-8	6E-7
89	Actinium-224	D, all compounds except those given for W and Y	2E+3	3E+1	1E-8	-	-	-
			LLI wall (2E+3)	Bone surf (4E+1)	-	5E-11	3E-5	3E-4
		W, halides and nitrates	-	5E+1	2E-8	7E-11	-	-
		Y, oxides and hydroxides	-	5E+1	2E-8	6E-11	-	-
89	Actinium-225	D, see ^{224}Ac	5E+1	3E-1	1E-10	-	-	-
			LLI wall (5E+1)	Bone surf (5E-1)	-	7E-13	7E-7	7E-6
		W, see ^{224}Ac	-	6E-1	3E-10	9E-13	-	-
		Y, see ^{224}Ac	-	6E-1	3E-10	9E-13	-	-
89	Actinium-226	D, see ^{224}Ac	1E+2	3E+0	1E-9	-	-	-
			LLI wall (1E+2)	Bone surf (4E+0)	-	5E-12	2E-6	2E-5
		W, see ^{224}Ac	-	5E+0	2E-9	7E-12	-	-
		Y, see ^{224}Ac	-	5E+0	2E-9	6E-12	-	-
89	Actinium-227	D, see ^{224}Ac	2E-1	4E-4	2E-13	-	-	-
			Bone surf (4E-1)	Bone surf (8E-4)	-	1E-15	5E-9	5E-8
		W, see ^{224}Ac	-	2E-3	7E-13	-	-	-
			-	Bone surf (3E-3)	-	4E-15	-	-
		Y, see ^{224}Ac	-	4E-3	2E-12	6E-15	-	-

58 FR 67657

Atomic No.	Radionuclide	Class	Table 1 Occupational Values: Col. 1 Oral Ingestion ALI (μCi)	Table 1: Col. 2 Inhalation ALI (μCi)	Table 1: Col. 3 Inhalation DAC (μCi/ml)	Table 2 Effluent Concentrations: Col. 1 Air (μCi/ml)	Table 2: Col. 2 Water (μCi/ml)	Table 3 Releases to Sewers: Monthly Average Concentration (μCi/ml)
89	Actinium-228	D, see ^{224}Ac	2E+3	9E+0	4E-9	-	3E-5	3E-4
			-	Bone surf (2E+1)	-	2E-11	-	-
		W, see ^{224}Ac	-	4E+1	2E-8	-	-	-
			-	Bone surf (6E+1)	-	8E-11	-	-
		Y, see ^{224}Ac	-	4E+1	2E-8	6E-11	-	-
90	Thorium-226[2]	W, all compounds except those given for Y	5E+3	2E+2	6E-8	2E-10	-	-
			St. wall (5E+3)	-	-	-	7E-5	7E-4
		Y, oxides and hydroxides	-	1E+2	6E-8	2E-10	-	-
90	Thorium-227	W, see ^{226}Th	1E+2	3E-1	1E-10	5E-13	2E-6	2E-5
		Y, see ^{226}Th	-	3E-1	1E-10	5E-13	-	-
90	Thorium-228	W, see ^{226}Th	6E+0	1E-2	4E-12	-	-	-
			Bone surf (1E+1)	Bone surf (2E-2)	-	3E-14	2E-7	2E-6
		Y, see ^{226}Th	-	2E-2	7E-12	2E-14	-	-
90	Thorium-229	W, see ^{226}Th	6E-1	9E-4	4E-13	-	-	-
			Bone surf (1E+0)	Bone surf (2E-3)	-	3E-15	2E-8	2E-7
		Y, see ^{226}Th	-	2E-3	1E-12	-	-	-
			-	Bone surf (3E-3)	-	4E-15	-	-
90	Thorium-230	W, see ^{226}Th	4E+0	6E-3	3E-12	-	-	-
			Bone surf (9E+0)	Bone surf (2E-2)	-	2E-14	1E-7	1E-6
		Y, see ^{226}Th	-	2E-2	6E-12	-	-	-
			-	Bone surf (2E-2)	-	3E-14	-	-
90	Thorium-231	W, see ^{226}Th	4E+3	6E+3	3E-6	9E-9	5E-5	5E-4
		Y, see ^{226}Th	-	6E+3	3E-6	9E-9	-	-
90	Thorium-232	W, see ^{226}Th	7E-1	1E-3	5E-13	-	-	-
			Bone surf (2E+0)	Bone surf (3E-3)	-	4E-15	3E-8	3E-7
		Y, see ^{226}Th	-	3E-3	1E-12	-	-	-
			-	Bone surf (4E-3)	-	6E-15	-	-
90	Thorium-234	W, see ^{226}Th	3E+2	2E+2	8E-8	3E-10	-	-
			LLI wall (4E+2)	-	-	-	5E-6	5E-5
		Y, see ^{226}Th	-	2E+2	6E-8	2E-10	-	-
91	Protactinium-227[2]	W, all compounds except those given for Y	4E+3	1E+2	5E-8	2E-10	5E-5	5E-4
		Y, oxides and hydroxides	-	1E+2	4E-8	1E-10	-	-
91	Protactinium-228	W, see ^{227}Pa	1E+3	1E+1	5E-9	-	2E-5	2E-4
			-	Bone surf (2E+1)	-	3E-11	-	-
		Y, see ^{226}Pa	-	1E+1	5E-9	2E-11	-	-

Atomic No.	Radionuclide	Class	Table 1 Occupational Values: Col. 1 Oral Ingestion ALI (μCi)	Col. 2 Inhalation ALI (μCi)	Col. 3 Inhalation DAC (μCi/ml)	Table 2 Effluent Concentrations: Col. 1 Air (μCi/ml)	Col. 2 Water (μCi/ml)	Table 3 Releases to Sewers: Monthly Average Concentration (μCi/ml)
91	Protactinium-230	W, see ^{227}Pa	6E+2	5E+0	2E-9	7E-12	-	-
			Bone surf (9E+2)	-	-	-	1E-5	1E-4
		Y, see ^{227}Pa	-	4E+0	1E-9	5E-12	-	-
91	Protactinium-231	W, see ^{227}Pa	2E-1	2E-3	6E-13	-	-	-
			Bone surf (5E-1)	Bone surf (4E-3)	-	6E-15	6E-9	6E-8
		Y, see ^{226}Pa	-	4E-3	2E-12	-	-	-
			-	Bone surf (6E-3)	-	8E-15	-	-
91	Protactinium-232	W, see ^{227}Pa	1E+3	2E+1	9E-9	-	2E-5	2E-4
			-	Bone surf (6E+1)	-	8E-11	-	-
		Y, see ^{227}Pa	-	6E+1	2E-8	-	-	-
			-	Bone surf (7E+1)	-	1E-10	-	-
91	Protactinium-233	W, see ^{227}Pa	1E+3	7E+2	3E-7	1E-9	-	-
			LLI wall (2E+3)	-	-	-	2E-5	2E-4
		Y, see ^{227}Pa	-	6E+2	2E-7	8E-10	-	-
91	Protactinium-234	W, see ^{227}Pa	2E+3	8E+3	3E-6	1E-8	3E-5	3E-4
		Y, see ^{227}Pa	-	7E+3	3E-6	9E-9	-	-
92	Uranium-230	D, UF_6, UO_2F_2, $UO_2(NO_3)_2$	4E+0	4E-1	2E-10	-	-	-
			Bone surf (6E+0)	Bone surf (6E-1)	-	8E-13	8E-8	8E-7
		W, UO_3, UF_4, UCl_4	-	4E-1	1E-10	5E-13	-	-
		Y, UO_2, U_3O_8	-	3E-1	1E-10	4E-13	-	-
92	Uranium-231	D, see ^{230}U	5E+3	8E+3	3E-6	1E-8	-	-
			LLI wall (4E+3)	-	-	-	6E-5	6E-4
		W, see ^{230}U	-	6E+3	2E-6	8E-9	-	-
		Y, see ^{230}U	-	5E+3	2E-6	6E-9	-	-
92	Uranium-232	D, see ^{230}U	2E+0	2E-1	9E-11	-	-	-
			Bone surf (4E+0)	Bone surf (4E-1)	-	6E-13	6E-8	6E-7
		W, see ^{230}U	-	4E-1	2E-10	5E-13	-	-
		Y, see ^{230}U	-	8E-3	3E-12	1E-14	-	-
92	Uranium-233	D, see ^{230}U	1E+1	1E+0	5E-10	-	-	-
			Bone surf (2E+1)	Bone surf (2E+0)	-	3E-12	3E-7	3E-6
		W, see ^{230}U	-	7E-1	3E-10	1E-12	-	-
		Y, see ^{230}U	-	4E-2	2E-11	5E-14	-	-
92	Uranium-234[3]	D, see ^{230}U	1E+1	1E+0	5E-10	-	-	-
			Bone surf (2E+1)	Bone surf (2E+0)	-	3E-12	3E-7	3E-6
		W, see ^{230}U	-	7E-1	3E-10	1E-12	-	-
		Y, see ^{230}U	-	4E-2	2E-11	5E-14	-	-

58 FR 67657

58 FR 67657

Atomic No.	Radionuclide	Class	Table 1 Occupational Values: Col. 1 Oral Ingestion ALI (µCi)	Col. 2 Inhalation ALI (µCi)	Col. 3 Inhalation DAC (µCi/ml)	Table 2 Effluent Concentrations: Col. 1 Air (µCi/ml)	Col. 2 Water (µCi/ml)	Table 3 Releases to Sewers: Monthly Average Concentration (µCi/ml)
92	Uranium-235[3]	D, see ^{230}U	1E+1	1E+0	6E-10	-	-	-
			Bone surf (2E+1)	Bone surf (2E+0)	-	3E-12	3E-7	3E-6
		W, see ^{230}U	-	8E-1	3E-10	1E-12	-	-
		Y, see ^{230}U	-	4E-2	2E-11	6E-14	-	-
92	Uranium-235	D, see ^{230}U	1E+1	1E+0	5E-10	-	-	-
			Bone surf (2E+1)	Bone surf (2E+0)	-	3E-12	3E-7	3E-6
		W, see ^{230}U	-	8E-1	3E-10	1E-12	-	-
		Y, see ^{230}U	-	4E-2	2E-11	6E-14	-	-
92	Uranium-237	D, see ^{230}U	2E+3	3E+3	1E-6	4E-9	-	-
			LLI wall (2E+3)	-	-	-	3E-5	3E-4
		W, see ^{230}U	-	2E+3	7E-7	2E-9	-	-
		Y, see ^{230}U	-	2E+3	6E-7	2E-9	-	-
92	Uranium-238[3]	D, see ^{230}U	1E+1	1E+0	6E-10	-	-	-
			Bone surf (2E+1)	Bone surf (2E+0)	-	3E-12	3E-7	3E-6
		W, see ^{230}U	-	8E-1	3E-10	1E-12	-	-
		Y, see ^{230}U	-	4E-2	2E-11	6E-14	-	-
92	Uranium-239[2]	D, see ^{230}U	7E+4	2E+5	8E-5	3E-7	9E-4	9E-3
		W, see ^{230}U	-	2E+5	7E-5	2E-7	-	-
		Y, see ^{230}U	-	2E+5	6E-5	2E-7	-	-
92	Uranium-240	D, see ^{230}U	1E+3	4E+3	2E-6	5E-9	2E-5	2E-4
		W, see ^{230}U	-	3E+3	1E-6	4E-9	-	-
		Y, see ^{230}U	-	2E+3	1E-6	3E-9	-	-
92	Uranium-natural[3]	D, see ^{230}U	1E+1	1E+0	5E-10	-	-	-
			Bone surf (2E+1)	Bone surf (2E+0)	-	3E-12	3E-7	3E-6
		W, see ^{230}U	-	8E-1	3E-10	9E-13	-	-
		Y, see ^{230}U	-	5E-2	2E-11	9E-14	-	-
93	Neptunium-232[2]	W, all compounds	1E+5	2E+3	7E-7	-	2E-3	2E-2
			-	Bone surf (5E+2)	-	6E-9	-	-
93	Neptunium-233[2]	W, all compounds	8E+5	3E+6	1E-3	4E-6	1E-2	1E-1
93	Neptunium-234	W, all compounds	2E+3	3E+3	1E-6	4E-9	3E-5	3E-4
93	Neptunium-235	W, all compounds	2E+4	8E+2	3E-7	-	-	-
			LLI wall (2E+4)	Bone surf (1E+3)	-	2E-9	3E-4	3E-3
93	Neptunium-236 (1.15E+5 y)	W, all compounds	3E+0	2E-2	9E-12	-	-	-
			Bone surf (6E+0)	Bone surf (5E-2)	-	8E-14	9E-8	9E-7
93	Neptunium-236m (22.5 h)	W, all compounds	3E+3	3E+1	1E-8	-	-	-
			Bone surf (4E+3)	Bone surf (7E+1)	-	1E-10	5E-5	5E-4
93	Neptunium-237	W, all compounds	5E-1	4E-3	2E-12	-	-	-
			Bone surf (1E+0)	Bone surf (1E-2)	-	1E-14	2E-8	2E-7

Atomic No.	Radionuclide	Class	Table 1 Occupational Values: Col. 1 Oral Ingestion ALI (μCi)	Col. 2 Inhalation ALI (μCi)	Col. 3 Inhalation DAC (μCi/ml)	Table 2 Effluent Concentrations: Col. 1 Air (μCi/ml)	Col. 2 Water (μCi/ml)	Table 3 Releases to Sewers: Monthly Average Concentration (μCi/ml)
93	Neptunium-238	W, all compounds	1E+3	6E+1	3E-8	-	2E-5	2E-4
			-	Bone surf (2E+2)	-	2E-10	-	-
93	Neptunium-239	W, all compounds	2E+3	2E+3	9E-7	3E-9	-	-
			LLI wall (2E+3)	-	-	-	2E-5	2E-4
93	Neptunium-240[2]	W, all compounds	2E+4	8E+4	3E-5	1E-7	3E-4	3E-3
94	Plutonium-234	W, all compounds except PuO_2	8E+3	2E+2	9E-8	3E-10	1E-4	1E-3
		Y, PuO_2	-	2E+2	8E-8	3E-10	-	-
94	Plutonium-235[2]	W, see ^{234}Pu	9E+5	3E+6	1E-3	4E-6	1E-2	1E-1
		Y, see ^{234}Pu	-	3E+6	1E-3	3E-6	-	-
94	Plutonium-236	W, see ^{234}Pu	2E+0	2E-2	8E-12	-	-	-
			Bone surf (4E+0)	Bone surf (4E-2)	-	5E-14	6E-8	6E-7
		Y, see ^{234}Pu	-	4E-2	2E-11	6E-14	-	-
94	Plutonium-237	W, see ^{234}Pu	1E+4	3E+3	1E-6	5E-9	2E-4	2E-3
		Y, see ^{234}Pu	-	3E+3	1E-6	4E-9	-	-
94	Plutonium-238	W, see ^{234}Pu	9E-1	7E-3	3E-12	-	-	-
			Bone surf (2E+0)	Bone surf (1E-2)	-	2E-14	2E-8	2E-7
		Y, see ^{234}Pu	-	2E-2	8E-12	2E-14	-	-
94	Plutonium-239	W, see ^{234}Pu	8E-1	6E-3	3E-12	-	-	-
			Bone surf (1E+0)	Bone surf (1E-2)	-	2E-14	2E-8	2E-7
		Y, see ^{234}Pu	-	2E-2	7E-12	-	-	-
			-	Bone surf (2E-2)	-	2E-14	-	-
94	Plutonium-240	W, see ^{234}Pu	8E-1	6E-3	3E-12	-	-	-
			Bone surf (1E+0)	Bone surf (1E-2)	-	2E-14	2E-8	2E-7
		Y, see ^{234}Pu	-	2E-2	7E-12	-	-	-
			-	Bone surf (2E-2)	-	2E-14	-	-
94	Plutonium-241	W, see ^{234}Pu	4E+1	3E-1	1E-10	-	-	-
			Bone surf (7E+1)	Bone surf (6E-1)	-	8E-13	1E-6	1E-5
		Y, see ^{234}Pu	-	8E-1	3E-10	-	-	-
			-	Bone surf (1E+0)	-	1E-12	-	-

58 FR 67657

58 FR 67657

Atomic No.	Radionuclide	Class	Table 1 Occupational Values: Col. 1 Oral Ingestion ALI (μCi)	Col. 2 Inhalation ALI (μCi)	Col. 3 Inhalation DAC (μCi/ml)	Table 2 Effluent Concentrations: Col. 1 Air (μCi/ml)	Col. 2 Water (μCi/ml)	Table 3 Releases to Sewers: Monthly Average Concentration (μCi/ml)
94	Plutonium-242	W, see ^{234}Pu	8E-1	7E-3	3E-12	-	-	-
			Bone surf (1E+0)	Bone surf (1E-2)	-	2E-14	2E-8	2E-7
		Y, see ^{234}Pu	-	2E-2	7E-12	-	-	-
			-	Bone surf (2E-2)	-	2E-14	-	-
94	Plutonium-243	W, see ^{234}Pu	2E+4	4E+4	2E-5	5E-8	2E-4	2E-3
		Y, see ^{234}Pu	-	4E+4	2E-5	5E-8	-	-
94	Plutonium-244	W, see ^{234}Pu	8E-1	7E-3	3E-12	-	-	-
			Bone surf (2E+0)	Bone surf (1E-2)	-	2E-14	2E-8	2E-7
		Y, see ^{234}Pu	-	2E-2	7E-12	-	-	-
			-	Bone surf (2E-2)	-	2E-14	-	-
94	Plutonium-245	W, see ^{234}Pu	2E+3	5E+3	2E-6	6E-9	3E-5	3E-4
		Y, see ^{234}Pu	-	4E+3	2E-6	6E-9	-	-
94	Plutonium-246	W, see ^{234}Pu	4E+2	3E+2	1E-7	4E-10	-	-
			LLI wall (4E+2)	-	-	-	6E-6	6E-5
		Y, see ^{234}Pu	-	3E+2	1E-7	4E-10	-	-
95	Americium-237[2]	W, all compounds	8E+4	3E+5	1E-4	4E-7	1E-3	1E-2
95	Americium-238[2]	W, all compounds	4E+4	3E+3	1E-6	-	5E-4	5E-3
			-	Bone surf (6E+3)	-	9E-9	-	-
95	Americium-239	W, all compounds	5E+3	1E+4	5E-6	2E-8	7E-5	7E-4
95	Americium-240	W, all compounds	2E+3	3E+3	1E-6	4E-9	3E-5	3E-4
95	Americium-241	W, all compounds	8E-1	6E-3	3E-12	-	-	-
			Bone surf (1E+0)	Bone surf (1E-2)	-	2E-14	2E-8	2E-7
95	Americium-242m	W, all compounds	8E-1	6E-3	3E-12	-	-	-
			Bone surf (1E+0)	Bone surf (1E-2)	-	2E-14	2E-8	2E-7
95	Americium-242	W, all compounds	4E+3	8E+1	4E-8	-	5E-5	5E-4
			-	Bone surf (9E+1)	-	1E-10	-	-
95	Americium-243	W, all compounds	8E-1	6E-3	3E-12	-	-	-
			Bone surf (1E+0)	Bone surf (1E-2)	-	2E-14	2E-8	2E-7
95	Americium-244m[2]	W, all compounds	6E+4	4E+3	2E-6	-	-	-
			St. wall (8E+4)	Bone surf (7E+3)	-	1E-8	1E-3	1E-2
95	Americium-244	W, all compounds	3E+3	2E+2	8E-8	-	4E-5	4E-4
			-	Bone surf (3E+2)	-	4E-10	-	-
95	Americium-245	W, all compounds	3E+4	8E+4	3E-5	1E-7	4E-4	4E-3

Atomic No.	Radionuclide	Class	Table 1 Occupational Values: Col. 1 Oral Ingestion ALI (μCi)	Col. 2 Inhalation ALI (μCi)	Col. 3 Inhalation DAC (μCi/ml)	Table 2 Effluent Concentrations: Col. 1 Air (μCi/ml)	Col. 2 Water (μCi/ml)	Table 3 Releases to Sewers: Monthly Average Concentration (μCi/ml)
95	Americium-246m[2]	W, all compounds	5E+4	2E+5	8E-5	3E-7	-	-
			St. wall (6E+4)	-	-	-	8E-4	8E-3
95	Americium-246[2]	W, all compounds	3E+4	1E+5	4E-5	1E-7	4E-4	4E-3
96	Curium-238	W, all compounds	2E+4	1E+3	5E-7	2E-9	2E-4	2E-3
96	Curium-240	W, all compounds	6E+1	6E-1	2E-10	-	-	-
			Bone surf (8E+1)	Bone surf (6E-1)	-	9E-13	1E-6	1E-5
96	Curium-241	W, all compounds	1E+3	3E+1	1E-8	-	2E-5	2E-4
			-	Bone surf (4E+1)	-	5E-11	-	-
96	Curium-242	W, all compounds	3E+1	3E-1	1E-10	-	-	-
			Bone surf (5E+1)	Bone surf (3E-1)	-	4E-13	7E-7	7E-6
96	Curium-243	W, all compounds	1E+0	9E-3	4E-12	-	-	-
			Bone surf (2E+0)	Bone surf (2E-2)	-	2E-14	3E-8	3E-7
96	Curium-244	W, all compounds	1E+0	1E-2	5E-12	-	-	-
			Bone surf (3E+0)	Bone surf (2E-2)	-	3E-14	3E-8	3E-7
96	Curium-245	W, all compounds	7E-1	6E-3	3E-12	-	-	-
			Bone surf (1E+0)	Bone surf (1E-2)	-	2E-14	2E-8	2E-7
96	Curium-246	W, all compounds	7E-1	6E-3	3E-12	-	-	-
			Bone surf (1E+0)	Bone surf (1E-2)	-	2E-14	2E-8	2E-7
96	Curium-247	W, all compounds	8E-1	6E-3	3E-12	-	-	-
			Bone surf (1E+0)	Bone surf (1E-2)	-	2E-14	2E-8	2E-7
96	Curium-248	W, all compounds	2E-1	2E-3	7E-13	-	-	-
			Bone surf (4E-1)	Bone surf (3E-3)	-	4E-15	5E-9	5E-8
96	Curium-249[2]	W, all compounds	5E+4	2E+4	7E-6	-	7E-4	7E-3
			-	Bone surf (3E+4)	-	4E-8	-	-
96	Curium-250	W, all compounds	4E-2	3E-4	1E-13	-	-	-
			Bone surf (6E-2)	Bone surf (5E-4)	-	8E-16	9E-10	9E-9
97	Berkelium-245	W, all compounds	2E+3	1E+3	5E-7	2E-9	3E-5	3E-4
97	Berkelium-246	W, all compounds	3E+3	3E+3	1E-6	4E-9	4E-5	4E-4
97	Berkelium-247	W, all compounds	5E-1	4E-3	2E-12	-	-	-
			Bone surf (1E+0)	Bone surf (9E-3)	-	1E-14	2E-8	2E-7
97	Berkelium-249	W, all compounds	2E+2	2E+0	7E-10	-	-	-
			Bone surf (5E+2)	Bone surf (4E+0)	-	5E-12	6E-6	6E-5

58 FR 67657

PART 20 STANDARDS FOR PROTECTION AGAINST RADIATION

Atomic No.	Radionuclide	Class	Table 1 Occupational Values: Col. 1 Oral Ingestion ALI (μCi)	Table 1: Col. 2 Inhalation ALI (μCi)	Table 1: Col. 3 Inhalation DAC (μCi/ml)	Table 2 Effluent Concentrations: Col. 1 Air (μCi/ml)	Table 2: Col. 2 Water (μCi/ml)	Table 3 Releases to Sewers: Monthly Average Concentration (μCi/ml)
97	Berkelium-250	W, all compounds	9E+3	3E+2	1E-7	-	1E-4	1E-3
			-	Bone surf (7E+2)	-	1E-9	-	-
98	Californium-244[2]	W, all compounds except those given for Y	3E+4	6E+2	2E-7	8E-10	-	-
			St. wall (3E+4)	-	-	-	4E-4	4E-3
		Y, *oxides and hydroxides*	-	6E+2	2E-7	8E-10	-	-
98	Californium-246	W, see ^{244}Cf	4E+2	9E+0	4E-9	1E-11	5E-6	5E-5
		Y, see ^{244}Cf	-	9E+0	4E-9	1E-11	-	-
98	Californium-248	W, see ^{244}Cf	8E+0	6E-2	3E-11	-	-	-
			Bone surf (2E+1)	Bone surf (1E-1)	-	2E-13	2E-7	2E-6
		Y, see ^{244}Cf	-	1E-1	4E-11	1E-13	-	-
98	Californium-249	W, see ^{244}Cf	5E-1	4E-3	2E-12	-	-	-
			Bone surf (1E+0)	Bone surf (9E-3)	-	1E-14	2E-8	2E-7
		Y, see ^{244}Cf	-	1E-2	4E-12	-	-	-
			-	Bone surf (1E-2)	-	2E-14	-	-
98	Californium-250	W, see ^{244}Cf	1E+0	9E-3	4E-12	-	-	-
			Bone surf (2E+0)	Bone surf (2E-2)	-	3E-14	3E-8	3E-7
		Y, see ^{244}Cf	-	3E-2	1E-11	4E-14	-	-
98	Californium-251	W, see ^{244}Cf	5E-1	4E-3	2E-12	-	-	-
			Bone surf (1E+0)	Bone surf (9E-3)	-	1E-14	2E-8	2E-7
		Y, see ^{244}Cf	-	1E-2	4E-12	-	-	-
			-	Bone surf (1E-2)	-	2E-14	-	-
98	Californium-252	W, see ^{244}Cf	2E+0	2E-2	8E-12	-	-	-
			Bone surf (5E+0)	Bone surf (4E-2)	-	5E-14	7E-8	7E-7
		Y, see ^{244}Cf	-	3E-2	1E-11	5E-14	-	-
98	Californium-253	W, see ^{244}Cf	2E+2	2E+0	8E-10	3E-12	-	-
			Bone surf (4E+2)	-	-	-	5E-6	5E-5
		Y, see ^{244}Cf	-	2E+0	7E-10	2E-12	-	-
98	Californium-254	W, see ^{244}Cf	2E+0	2E-2	9E-12	3E-14	3E-8	3E-7
		Y, see ^{244}Cf	-	2E-2	7E-12	2E-14	-	-
99	Einsteinium-250	W, all compounds	4E+4	5E+2	2E-7	-	6E-4	6E-3
			-	Bone surf (1E+3)	-	2E-9	-	-
99	Einsteinium-251	W, all compounds	7E+3	9E+2	4E-7	-	1E-4	1E-3
			-	Bone surf (1E+3)	-	2E-9	-	-
99	Einsteinium-253	W, all compounds	2E+2	1E+0	6E-10	2E-12	2E-6	2E-5

58 FR 67657

58 FR 67657

Atomic No.	Radionuclide	Class	Table 1 Occupational Values: Col. 1 Oral Ingestion ALI (µCi)	Table 1 Occupational Values: Col. 2 Inhalation ALI (µCi)	Table 1 Occupational Values: Col. 3 Inhalation DAC (µCi/ml)	Table 2 Effluent Concentrations: Col. 1 Air (µCi/ml)	Table 2 Effluent Concentrations: Col. 2 Water (µCi/ml)	Table 3 Releases to Sewers: Monthly Average Concentration (µCi/ml)
99	Einsteinium-254m	W, all compounds	3E+2	1E+1	4E-9	1E-11	-	-
			LLI wall (3E+2)	-	-	-	4E-6	4E-5
99	Einsteinium-254	W, all compounds	8E+0	7E-2	3E-11	-	-	-
			Bone surf (2E+1)	Bone surf (1E-1)	-	2E-13	2E-7	2E-6
100	Fermium-252	W, all compounds	5E+2	1E+1	5E-9	2E-11	6E-6	6E-5
100	Fermium-253	W, all compounds	1E+3	1E+1	4E-9	1E-11	1E-5	1E-4
100	Fermium-254	W, all compounds	3E+3	9E+1	4E-8	1E-10	4E-5	4E-4
100	Fermium-255	W, all compounds	5E+2	2E+1	9E-9	3E-11	7E-6	7E-5
100	Fermium-257	W, all compounds	2E+1	2E-1	7E-11	-	-	-
			Bone surf (4E+1)	Bone surf (2E-1)	-	3E-13	5E-7	5E-6
101	Mendelevium-257	W, all compounds	7E+3	8E+1	4E-8	-	1E-4	1E-3
			-	Bone surf (9E+1)	-	1E-10	-	-
101	Mendelevium-258	W, all compounds	3E+1	2E-1	1E-10	-	-	-
			Bone surf (5E+1)	Bone surf (3E-1)	-	5E-13	6E-7	6E-6
-	Any single radionuclide not listed above with decay mode other than alpha emission or spontaneous fission and with radioactive half-life less than 2 hours	Submersion[1]	-	2E+2	1E-7	1E-9	-	-
-	Any single radionuclide not listed above with decay mode other than alpha emission or spontaneous fission and with radioactive half-life greater than 2 hours		-	2E-1	1E-10	1E-12	1E-8	1E-7
-	Any single radionuclide not listed above that decays by alpha emission or spontaneous fission, or any mixture for which either the identity or the concentration of any radionuclide in the mixture is not known		-	4E-4	2E-13	1E-15	2E-9	2E-8

FOOTNOTES:

[1]"Submersion" means that values given are for submersion in a hemispherical semi-infinite cloud of airborne material.

[2]These radionuclides have radiological half-lives of less than 2 hours. The total effective dose equivalent received during operations with these radionuclides might include a significant contribution from external exposure. The DAC values for all radionuclides, other than those designated Class "Submersion," are based upon the committed effective dose equivalent due to the intake of the radionuclide into the body and do NOT include potentially significant contributions to dose equivalent from external exposures. The licensee may substitute 1E-7 μCi/ml for the listed DAC to account for the submersion dose prospectively, but should use individual monitoring devices or other radiation measuring instruments that measure external exposure to demonstrate compliance with the limits. (See § 20.1203.)

[3]For soluble mixtures of U-238, U-234, and U-235 in air, chemical toxicity may be the limiting factor (see § 20.1201(e)). If the percent by weight (enrichment) of U-235 is not greater than 5, the concentration value for a 40-hour workweek is 0.2 milligrams uranium per cubic meter of air average. For any enrichment, the product of the average concentration and time of exposure during a 40-hour workweek shall not exceed 8E-3 (SA) μCi-hr/ml, where SA is the specific activity of the uranium inhaled. The specific activity for natural uranium is 6.77E-7 curies per gram U. The specific activity for other mixtures of U-238, U-235, and U-234, if not known, shall be:

$$SA = 3.6E\text{-}7 \text{ curies/gram U} \qquad \text{U-depleted}$$

$$SA = [0.4 + 0.38\,(\text{enrichment}) + 0.0034\,(\text{enrichment})^2]\ E\text{-}6\ , \quad \text{enrichment} \geq 0.72$$

where enrichment is the percentage by weight of U-235, expressed as percent.

NOTE:

1. If the identity of each radionuclide in a mixture is known but the concentration of one or more of the radionuclides in the mixture is not known, the DAC for the mixture shall be the most restrictive DAC of any radionuclide in the mixture.

2. If the identity of each radionuclide in the mixture is not known, but it is known that certain radionuclides specified in this appendix are not present in the mixture, the inhalation ALI, DAC, and effluent and sewage concentrations for the mixture are the lowest values specified in this appendix for any radionuclide that is not known to be absent from the mixture; or

	Table 1 Occupational Values			Table 2 Effluent Concentrations		Table 3 Releases to Sewers
	Col. 1	Col. 2	Col. 3	Col. 1	Col. 2	
	Oral Ingestion	Inhalation				
Radionuclide	ALI (μCi)	ALI (μCi)	DAC (μCi/ml)	Air (μCi/ml)	Water (μCi/ml)	Monthly Average Concentration (μCi/ml)
If it is known that Ac-227-D and Cm-250-W are not present	-	7E-4	3E-13	-	-	-
If, in addition, it is known that Ac-227-W,Y, Th-229-W,Y, Th-230-W, Th-232-W,Y, Pa-231-W,Y, Np-237-W, Pu-239-W, Pu-240-W, Pu-242-W, Am-241-W, Am-242m-W, Am-243-W, Cm-245-W, Cm-246-W, Cm-247-W, Cm-248-W, Bk-247-W, Cf-249-W, and Cf-251-W are not present	-	7E-3	3E-12	-	-	-
If, in addition, it is known that Sm-146-W, Sm-147-W, Gd-148-D,W, Gd-152-D,W, Th-228-W,Y, Th-230-Y, U-232-Y, U-233-Y, U-234-Y, U-235-Y, U-236-Y, U-238-Y, Np-236-W, Pu-236-W,Y, Pu-238-W,Y, Pu-239-Y, Pu-240-Y, Pu-242-Y, Pu-244-W,Y, Cm-243-W, Cm-244-W, Cf-248-W, Cf-249-Y, Cf-250-W,Y, Cf-251-Y, Cf-252-W,Y, and Cf-254-W,Y are not present	-	7E-2	3E-11	-	-	-
If, in addition, it is known that Pb-210-D, Bi-210m-W, Po-210-D,W, Ra-223-W, Ra-225-W, Ra-226-W, Ac-225-D,W,Y, Th-227-W,Y, U-230-D,W,Y, U-232-D,W, Pu-241-W, Cm-240-W, Cm-242-W, Cf-248-Y, Es-254-W, Fm-257-W, and Md-258-W are not present	-	7E-1	3E-10	-	-	-

58 FR 67657

58 FR 67657

Radionuclide	Table 1 Occupational Values: Col. 1 Oral Ingestion ALI (µCi)	Col. 2 Inhalation ALI (µCi)	Col. 3 Inhalation DAC (µCi/ml)	Table 2 Effluent Concentrations: Col. 1 Air (µCi/ml)	Col. 2 Water (µCi/ml)	Table 3 Releases to Sewers: Monthly Average Concentration (µCi/ml)
If, in addition, it is known that Si-32-Y, Ti-44-Y, Fe-60-D, Sr-90-Y, Zr-93-D, Cd-113m-D, Cd-113-D, In-115-D,W, La-138-D, Lu-176-W, Hf-178m-D,W, Hf-182-D,W, Bi-210m-D, Ra-224-W, Ra-228-W, Ac-226-D,W,Y, Pa-230-W,Y, U-233-D,W, U-234-D,W, U-235-D,W, U-236-D,W, U-238-D,W, Pu-241-Y, Bk-249-W, Cf-253-W,Y, and Es-253-W are not present	-	7E+0	3E-9	-	-	-
If it is known that Ac-227-D,W,Y, Th-229-W,Y, Th-232-W,Y, Pa-231-W,Y, Cm-248-W, and Cm-250-W are not present	-	-		1E-14	-	-
If, in addition, it is known that Sm-146-W, Gd-148-D,W, Gd-152-D, Th-228-W,Y, Th-230-W,Y, U-232-Y, U-233-Y, U-234-Y, U-235-Y, U-236-Y, U-238-Y, U-Nat-Y, Np-236-W, Np-237-W, Pu-236-W,Y, Pu-238-W,Y, Pu-239-W,Y, Pu-240-W,Y, Pu-242-W,Y, Pu-244-W,Y, Am-241-W, Am-242m-W, Am-243-W, Cm-243-W, Cm-244-W, Cm-245-W, Cm-246-W, Cm-247-W, Bk-247-W, Cf-249-W,Y, Cf-250-W,Y, Cf-251-W,Y, Cf-252-W,Y, and Cf-254-W,Y are not present	-	-	-	1E-13	-	-
If, in addition, it is known that Sm-147-W, Gd-152-W, Pb-210-D, Bi-210m-W, Po-210-D,W, Ra-223-W, Ra-225-W, Ra-226-W, Ac-225-D,W,Y, Th-227-W,Y, U-230-D,W,Y, U-232-D,W, U-Nat-W, Pu-241-W, Cm-240-W, Cm-242-W, Cf-248-W,Y, Es-254-W, Fm-257-W, and Md-258-W are not present	-	-	-	1E-12	-	-
If, in addition it is known that Fe-60, Sr-90, Cd-113m, Cd-113, In-115, I-129, Cs-134, Sm-145, Sm-147, Gd-148, Gd-152, Hg-194 (organic), Bi-210m, Ra-223, Ra-224, Ra-225, Ac-225, Th-228, Th-230, U-233, U-234, U-235, U-236, U-238, U-Nat, Cm-242, Cf-248, Es-254, Fm-257, and Md-258 are not present	-	-	-	-	1E-6	1E-5

3. If a mixture of radionuclides consists of uranium and its daughters in ore dust (10 µm AMAD particle distribution assumed) prior to chemical separation of the uranium from the ore, the following values may be used for the DAC of the mixture: 6E-11 µCi of gross alpha activity from uranium-238, uranium-234, thorium-230, and radium-226 per milliliter of air; 3E-11 µCi of natural uranium per milliliter of air; or 45 micrograms of natural uranium per cubic meter of air.

4. If the identity and concentration of each radionuclide in a mixture are known, the limiting values should be derived as follows: determine, for each radionuclide in the mixture, the ratio between the concentration present in the mixture and the concentration otherwise established in Appendix B for the specific radionuclide when not in a mixture. The sum of such ratios for all of the radionuclides in the mixture may not exceed "1" (i.e., "unity").

Example: If radionuclides "A," "B," and "C" are present in concentrations C_A, C_B, and C_C, and if the applicable DACs are DAC_A, DAC_B, and DAC_C, respectively, then the concentrations shall be limited so that the following relationship exists:

$$\frac{C_A}{DAC_A} + \frac{C_B}{DAC_B} + \frac{C_C}{DAC_C} \leq 1$$

APPENDIX C

EMS SOFTWARE DOCUMENTATION

APPENDIX C
EMS SOFTWARE DOCUMENTATION
TABLE OF CONTENTS

CONTENTS		PAGES
Attachment 1	Effluent Management System Software Test Report for Seabrook Station, May 1994	C-3 Cover ii 1-11
Attachment 2	Resolutions of EMS Software Test Report Discrepancies	C-4 1-2
Attachment 3	Software Requirements Specification for North Atlantic Energy Service Corporation, Seabrook Station, Effluent Management Systems, Revision 04, FP 75486	C-5 1-35
Attachment 4	Technical Reference Manual, Effluent Management System NAESCO Seabrook Station, July 1994, FP 75486	C-6 36-93

ATTACHMENT 1: EFFLUENT MANAGEMENT SYSTEM SOFTWARE TEST REPORT FOR SEABROOK STATION, MAY 1994

EFFLUENT MANAGEMENT SYSTEM: SOFTWARE TEST REPORT FOR SEABROOK STATION MAY 1994

Prepared by _____ 5/26/94 Date

_____ 5/27/94 Date

Reviewed by _____ 5-31-94 Date

Approved by _____ 5/31/94 Date

Yankee Atomic Electric Company
Nuclear Services Division
580 Main Street
Bolton, Massachusetts 01740

Table of Contents

1.0 INTRODUCTION 1
1.1 Background 1
1.2 Acceptance Criteria 1

2.0 SUMMARY OF FINDINGS 2
2.1 EMS Dose and Dose Rate Conversion Factors 2
2.2 Liquid Release Testing 4
2.3 Gaseous Release Testing 4

3.0 TEST CONCLUSIONS 7

4.0 SUMMARY OF DISCREPANCIES 9

References 11

1.0 INTRODUCTION

Software testing as described in Reference [1] has been conducted for the Seabrook Station version of the Canberra Effluent Management System (EMS). The results and conclusions are presented in this report.

1.1 Background

Canberra Industries Inc. developed the EMS software to assist nuclear power plant personnel track effluent emissions and perform associated dose calculations. North Atlantic Energy Service Corporation purchased a Seabrook-specific version the Canberra EMS software which must meet specific requirements and incorporate site-specific information provided in the Offsite Dose Calculation Manual (ODCM) [2]. Software testing was conducted to provide assurances that the Seabrook EMS program produces results which are consistent with current ODCM assumptions and methods. All executions of the EMS program were performed at Seabrook Station on the target software. All executions of ODCM Method II were conducted at Yankee Atomic Electric Company in Bolton, Massachusetts.

1.2 Acceptance Criteria

The operability of the EMS software will be accepted if (i) information contained in the EMS data files is consistent with the ODCM, (ii) test results from the EMS program are consistent with results from ODCM methods, (iii) Technical Specifications requirements are met by the EMS software, and (iv) the EMS software meets design specifications.

Final user (Seabrook) acceptance is contingent on Seabrook approval of verification testing results and criteria established by user needs.

2.0 SUMMARY OF OBSERVATIONS

The EMS software testing included (i) identifying appropriate meteorological set up data, (ii) review of dose and dose rate conversion factor development, (iii) assessments for liquid releases, and (iv) assessments for gaseous releases. ODCM Method I was used initially to confirm dose results from the EMS program. However, the simplified nature of ODCM Method I made it difficult to change the values of various parameters or obtain meaningful comparisons (other than "bottom line" comparisons). The more adaptable ODCM method, Method II, was then used to confirm EMS doses. Observations made during the software testing are summarized below.

2.1 EMS Dose and Dose Rate Conversion Factors

The EMS software uses precalculated conversion factors which are contained in a data file. The dose conversion factors for both liquid and gaseous effluent releases were developed for four age groups (adult, teen, child and infant), and for specific organs (bone, liver,total body, kidney, lung, GI tract and skin). The liquid release dose conversion factors in the EMS program are the summation of the components for water recreation and ingestion of aquatic foods. The gaseous release dose conversion factors are exposure pathway-specific (e.g., inhalation, ground plane, milk ingestion, etc.).

Dose conversion factors are provided in the EMS program for all exposure pathways addressed in the ODCM. The development of all dose conversion factors in the EMS program followed the pathway-specific equations in the Effluent Management System Technical Reference Manual [3]. The EMS conversion factors for several radionuclides were examined to determined that the development process was consistent to the Technical Reference Manual and the ODCM.

2.1.1 Liquid Release Dose Conversion Factors

Although the individual components for the ingestion of aquatic foods were found to be consistent with the ODCM, a discrepancy was discovered in the water recreation component. The mixing ratio for shoreline activity used in the development of the EMS dose factors is equal to 0.025. While this value is inconsistent with ODCM Method I (which employs a mixing ratio of 0.1), it is consistent with ODCM Method II. It is identified as a discrepancy because it is unclear which set of ODCM assumptions (those for Method I or those for Method II) the EMS program is expected to adopt.

2.1.2 Gaseous Release Dose Conversion Factors

The EMS program uses dose conversion factors from Regulatory Guide 1.109 for assessment of noble gas releases. The dose factors in the EMS program were verified against and found to be consistent with Table B-1 of Regulatory Guide 1.109 [4].

The development methods for the other gaseous dose factors (i.e., for inhalation, ground plane, milk ingestion, meat ingestion, and ingestion of vegetables) were reviewed against applicable equations in the Technical Reference Manual and information in the ODCM. It is noted that the dose factors for ingestion of milk and meat are based on the fraction of year that animals are allowed to graze on pasture land (Fp) equal to 1.0. This is not consistent with the ODCM which calls for the use of an Fp value equal to 0.5.

The dose conversion factors in the EMS program for gaseous releases incorporate a shielding factor (SF) equal to 1.0. The EMS program is designed with a way of changing the value of SF (via use of the Options Table), but the factor is applied uniformly to both doses and dose rates. In contrast, the ODCM calls for the use of different values for SF in the calculations for doses and

dose rates.

2.2 Liquid Release Testing

Dose estimates from the EMS program for hypothetical liquid effluent discharges (containing single nuclide and radionuclide mixtures) are nearly identical to results from ODCM Method II when input data are based on the same mixing ratio value, indicating that the calculation method used in the EMS program is consistent with the ODCM. Additionally, the EMS routine(s) responsible for liquid effluent concentrations comparisons to MPC values and monitor set point determinations was observed to be operating properly.

2.3 Gaseous Release Testing

The agreement between estimates for total body dose rates, skin dose rates, and air (gamma and beta) doses due to emission of noble gases from the ODCM methods and the EMS program is excellent, indicating that the EMS calculation method is consistent with the ODCM.

There is also excellent agreement between inhalation doses from the EMS program and ODCM Method II indicating that, for the inhalation pathway, the calculational method and assumptions in the EMS program are consistent with those in the ODCM. The evaluation of the dose estimates via inhalation pathway included both long and short release durations for an elevated (mixed mode) and a ground level release point. The excellent agreement between the EMS and ODCM Method II also confirms that the release duration adjustment term, t^{-a}, is applied properly in the EMS program. However, an incorrect receptor location was reported on the EMS printout in the tests (D-2c and D-2d) in which the Plant Vent was changed to be recognized as a ground level release point.

Also noted during testing was that the EMS routine(s) responsible for calculating effluent concentration-to-MPC ratios and radionuclide release rates

appears to be operating properly for gaseous releases.

The EMS program incorporates the assumption that the fraction of elemental iodine is equal to 1.0 (consistent with NUREG-0133 [5]). In contrast, the fraction of elemental iodine is assumed equal to 0.5 in the ODCM methods (consistent with Regulatory Guide 1.109). Consequently, the EMS program produces dose estimates due to radioiodine that are at least a factor of two greater than doses from the ODCM methods. This difference increases to about a factor of 4 when the current values for Fp and SF assumed in the EMS program and ODCM methods are used in the dose calculations. The different assumptions for elemental iodine fractions should not present a problem because each program is based on NRC guidance: the EMS is based on NUREG-0133, the ODCM methods are based on Regulatory Guide 1.109. The EMS program takes the more conservative approach for determining doses from radioiodine.

Making appropriate adjustments for Fp, SF, and the fraction of elemental iodine (when radioiodine input was used) and comparing results for organ doses due to I131, H3, Co60 and Cs137 revealed that the calculational methods used in the EMS program are consistent with the ODCM for all exposure pathways (i.e., ground plane, inhalation, milk ingestion, meat ingestion, and vegetables ingestion).

Technical Specification 3.11.2.1 and the ODCM require the calculation of organ dose rates due to effluent discharges of I131, I133, H3 and particulates with a half-life greater than 8 days. However, in all test cases involving these types of nuclides, organ dose rate information did not appear on Page 4 of the EMS printout. Instead, the message "No calculations performed - check Sample & Receptors" appeared. The EMS set up data and input were reviewed with no apparent error identified. Since the test cases included Cs137, Co60, I131, and

H3, the missing dose rate information was unexpected. It is noted that organ dose rate information was provided on Page 4 of the EMS printout during a demonstration of the EMS program prior to testing.

3.0 TEST CONCLUSIONS

Although the dose conversion factors are based on information which is not completely consistent with the assumptions in the ODCM, the calculational methods used to determine doses from liquid and gaseous effluent discharges are consistent with the ODCM methods.

Other conclusions are:

1. As stated in Section 2.1.1, the development of the EMS liquid effluent dose factors is consistent with ODCM Method II, but not with Method I due to the mixing ratio value. If the EMS program is intended to be a hybrid method, the dose factors are consistent with the ODCM and are acceptable. On the other hand, if the EMS program is intended to provide automated ODCM Method I calculations, then the dose factor should be recalculated using a mixing ratio for shoreline activity equal to 0.1.

2. Since the EMS program is not designed to support the use of two shielding factors (one for dose rates and one for doses), use of a shielding factor equal to 1.0 is acceptable with the understanding that, although the dose rates produced by the EMS program will be consistent with the ODCM, the doses from the EMS program will be based on a more conservative assumption than doses from the ODCM methods.

3. Under the normal ODCM assumption for elemental iodine, the results from the EMS program will be at least a factor of two greater than results from the ODCM methods. The different assumptions regarding the elemental iodine fraction do not present a problem because each program is based on NRC guidance: the EMS program is based on NUREG-0133, and the ODCM is based on Regulatory Guide 1.109. Of the two methods, the EMS program takes the more conservative approach toward estimating doses from

radioiodine in gaseous effluent.

4. The radiation monitor set point determination method for liquid releases produces a set point value that is consistent the ODCM set point method.

5. The EMS routine that is responsible for comparison of liquid effluent concentrations and MPC values is operating properly.

6. The release duration adjustment term, t^{-a}, is used consistently to the ODCM.

4.0 SUMMARY OF DISCREPANCIES

Discrepancy	Area of Impact	Potential Solution(s)
Mixing ratio for shoreline activity used in EMS program.	Doses associated with liquid effluent discharges.	Clarify whether the EMS program is expected to follow ODCM assumptions for Method I or Method II. If determined to follow Method I, recalculate dose factors for liquid releases.
EMS dose factors based on Fp value which is not consistent with ODCM.	Doses due to ingestion of milk and meat.	Recalculate EMS dose factors for milk and meat ingestion pathways to incorporate Fp value consistent with the ODCM. Accept added conservatism in EMS in calculations of doses via milk and meat ingestion pathways.
Shielding factor (SF) applied uniformly to dose rates and doses in EMS program.	Doses associated with gaseous effluent discharges.	Accept use of SF = 1.0 and the added conservatism for doses. Modify EMS software to accommodate use of two values for SF (one for dose rates and one for doses).
Incorrect receptor location identified on EMS printout for ground level release point.	Potential assignment of doses to the wrong receptor.	Discuss with Canberra.
Assumed fraction of elemental iodine used in EMS program differs from ODCM methods.	Dose estimates due to iodine in gaseous effluents.	Accept added conservatism in doses due to iodine. Modify EMS software to use fraction for elemental iodine that is consistent with ODCM.

Discrepancy	Area of Impact	Potential Solution(s)
Missing organ dose rate information on EMS printout for effluent discharges containing I131, I133, H3, and particulates.	Technical Specification required dose rate not calculated.	Discuss with Canberra.

References

1. Yankee Atomic Electric Company, Effluent Monitoring System Software Test Plan for Seabrook Station, May, 1994.

2. NAESC, Station Offsite Dose Calculation Manual, Rev 13, 9/24/93.

3. Southern Nuclear Operating Company Effluent Management System Technical Reference Manual (07-0545), January 1993.

4. NRC Regulatory Guide 1.109, Calculation of Annual Doses to Man from Routine Releases of Reactor Effluents for the Purposes of Evaluating Compliance with 10CFR Part 50, Appendix I, Revision I, October 1977.

5. NRC NUREG-0133, Preparation of Radiological Effluent Technical Specifications for Nuclear Power Plants, October 1978.

ATTACHMENT 2: RESOLUTIONS OF EMS SOFTWARE TEST REPORT DISCREPANCIES

2. Resolution of EMS Software Test Report Discrepancies

The following discrepancy resolutions apply to the findings contained in the "Effluent Management System Test Report for Seabrook Station, May 1994" as noted on pages 9 and 10 (see Attachment #1 of Appendix C of the ODCM). With the positive resolution of the discrepancies identified in the EMS dose code, use of EMS as a computerized alternative approach (designated as Method IA in the ODCM) to determine compliance with the radioactive effluent dose and dose rate limits is acceptable since the results are comparable with the currently approved dose methods.

Discrepancy:

Mixing ratio for shoreline activity used in EMS Program not equal to the value used in the ODCM Method I (Mp = 1.0).

Resolution:

The mixing ratio for the shoreline activity pathway in the EMS is consistent with the ODCM Method II approved value of 0.025, and therefore does provide for a calculated dose that is within the parameters already approved in the ODCM. The use of the EMS code (ODCM Method IA) for calculating liquid doses is acceptable for determining compliance with the dose limits of the Technical Specifications without the need to modify the assumption used for the shoreline mixing ratio.

Discrepancy:

EMS dose factors based on Fp (fraction of year animals are on pasture) value which is not consistent with ODCM.

Resolution:

ODCM Method I assumes that the pasture season in the North East is 6 months long each year (Fp + 0.5). Method II allows for the pasture fraction to be set equal to 0.0 for the first and fourth quarters which equates the non-growing period of the year. The second and third quarters correspond to the growing season where the pasture fraction is assumed to be 1.0. The EMS software assumes an Fp value of 1.0 for animal grazing (meat and milk pathways) for all conditions. This is a moderately conservative approach compared to Method I and the off grazing season conditions modeled in Method II. It is equal to the grazing season assumptions of Method II as applied in the second and third quarters. As a result, the added conservatism in the EMS calculations for doses via milk and meat pathways are within acceptable margins and guidance provided in NRC NUREG-0133 for demonstrating compliance with Technical Specification dose limits. No changes to the EMS software are necessary.

Discrepancy:

Shielding factors (SF) applied uniformly to dose rates and doses in the EMS program.

2. Resolution of EMS Software Test Report Discrepancies (Continued)

Resolution:

The EMS program for gaseous releases incorporates a shielding factor (SF) equal to 1.0 for both dose rate and total dose determinations. In contrast, both Method I and II use a SF value of 1.0 instantaneous dose rate calculations, but a value of 0.7 for integrated doses based on assumptions in NRC Reg. Guide 1.109. The use of a SF equal to 1.0 for the external ground plane exposure pathway for both dose rate and total dose is a moderately conservative assumption that is within the bounds already assumed in the ODCM dose modeling. As a result, no modification to the EMS code as an acceptable approach (Method IA) for demonstrating compliance with Technical Specification dose/dose rate limits is required for SF.

Discrepancy:

Incorrect receptor location identified on EMS printout for ground level release point.

Resolution:

Incorrect name is identified on report with no impact on dose or dose rate calculations which were verified to be correct.

Discrepancy:

Assumed fraction of elemental iodine used in EMS program differs from ODCM Methods I and II.

Resolution:

For ODCM Methods I and II, the fraction of elemental iodine assumed for gaseous releases in 0.5 based on the guidance in NRC Reg. Guide 1.109. The EMS code assumes an elemental iodine fraction of 1.0 based on the guidance in NUREG-0133. Consequently, the EMS program (Method IA) will produce a moderately conservative estimate of dose impact (factor of 2) for iodine radionuclides if present in the release estimations when compared to existing approved methods. As a result, no modification to the EMS code is necessary for use in the ODCM for determining compliance with Technical Specification dose limits.

Discrepancy:

Missing organ dose rate information on EMS printout for effluent discharges containing I-131, I-133, H-3, and particulates.

Resolution:

This required information is easily obtainable from the permit closure process with flashing indication if any dose or dose rate limits are exceeded.

ATTACHMENT 3: SOFTWARE REQUIREMENTS SPECIFICATION FOR NORTH ATLANTIC ENERGY SERVICE CORPORATION, SEABROOK STATION, EFFLUENT MANAGEMENT SYSTEMS, REVISION 04, FP 75486

Software Requirements Specification
for
North Atlantic Energy Services Corporation
Seabrook Station
Effluent Management Systems
48-8448

Revision 04

Nuclear Data Systems Division Software Product

Originator: David J. Hanson WDW 9/15/93 Date: 9/14/93

Approved: Peter von der Heide Date: 9/15-93
Engineering (CI/NDS)

Approved: Ronald R. Zink Date: 9/20/93
Quality Assurance Manager(CI/NDS)

Approved: [illegible] Date: 10/29/93
Project Manager (Seabrook Station)

Revision History

Initials	Revision	Date	Description
DJH	00	2/26/93	Initial version
DJH	01	3/22/93	Updated incorrect dose equation
DJH	02	4/30/93	Updated to include all dose and dose rate equations
DJH	03	8/3/93	Updated based on modifications to software and customer's requested modification to the use of the default nuclide for gaseous permit processing.
DJH	04	9/14/93	Updated based on customer's request to remove modification to the default nuclide for gaseous permit processing.

	Page
1. Scope	1
2. Applicable Documents	1
3. Interfaces	1
3.1 Hardware	1
3.2 Software	1
3.3 Human	2
3.4 Packaging	2
4. Definitions	2
5. Principal Changes from Existing Packages	2
6. EMS Functionality	4
6.1 Database Maintenance Transactions	4
6.2 Editing Values through INGRES QBF	7
6.3 Liquid Pre-Release Processing	8
6.3.1 User Interface and Functionality	8
6.3.2 Associated Reports	9
6.3.3 Underlying Calculations	10
6.4 Liquid Post-Release Processing	11
6.4.1 User Interface and Functionality	11
6.4.2 Associated Reports	12
6.4.3 Underlying Calculations	12
6.5 Liquid Permit Editing	13
6.5.1 User Interface and Functionality	13
6.5.2 Associated Reports	13
6.5.3 Underlying Calculations	13
6.6 Liquid Permit Deletion	13
6.7 Gaseous Pre-Release Processing	14
6.7.1 User Interface and Functionality	14
6.7.2 Associated Reports	15
6.7.3 Underlying Calculations	15
6.8 Gaseous Post-Release Processing	21
6.8.1 User Interface and Functionality	21
6.8.2 Associated Reports	21
6.8.3 Underlying Calculations	22
6.9 Gaseous Permit Editing	27
6.9.1 User Interface and Functionality	27
6.9.2 Associated Reports	27
6.9.3 Underlying Calculations	27
6.10 Gaseous Permit Deletion	27
6.11 Semi-Annual Reporting	28
6.11.1 User Interface and Functionality	28
6.11.2 EMS Trend Plots	30
6.12 End-of-the-Year Data Archiving	30
6.12.1 User Interface and Functionality	30

1. Scope

This document establishes the software requirements for the Effluent Management System (EMS) software to be installed at North Atlantic Energy Services Corporation's Seabrook Station.

2. Applicable Documents

2.1 The following two documents are included as part of this SRS, and this SRS refers to specific sections of them:

2.1.1 "Southern Nuclear Operating Company Effluent Management System Operator's Manual" (07-0544), Version 1, January 1993.

2.1.2 "Southern Nuclear Operating Company Effluent Management System Technical Reference Manual" (07-0545), Version 2, January 1993.

Note: The above documents contain material (including screens and report formats) imported from final manuals for other EMS packages. Utility and plant names shown on screens and reports in these manuals are not significant, since they are determined by database data that will be customized to fit the Seabrook Station's usage.

2.2 The following document is a reference source for calculation methods of the EMS software. This SRS may refer to specific sections.

2.2.1 "Seabrook Station Offsite Dose Calculation Manual," Revision 12, January 1993.

3. Interfaces

3.1 Hardware

The EMS software shall run on the following CPU model: DEC Microvax 3100, Model 80.

3.2 Software

The software shall be written under VMS version 5.4-2 or later, using INGRES version 6.4 or later. It shall be written in VAX/FORTRAN or VAX-DCL. Utility programs provided by INGRES that are installed on the hardware configuration may be used if applicable.

3.3 Human

The user may be expected to have received operator training from the system manager, Canberra/NDS, or the plant training department prior to using any part of the EMS software. Knowledge of INGRES or VMS shall not be assumed. The menus of operations are intended to be self-explanatory, but an Operator's Manual shall be developed.

The user may be expected to have enough knowledge of USNRC-regulated nuclear power plant effluent management to provide accurate and appropriate inputs, and to determine the validity of the software's results.

3.4 Packaging

A distribution kit will be produced for the customer. Any removable medium supported by the operating hardware delivered to the Seabrook Station is an acceptable distribution medium.

4. Definitions

EMS - Effluent Management System. Software for determining effluent monitor setpoints, tracking activity releases and dose impacts of individual releases, and generating semi-annual release reports.

SRS - Software Requirements Specification.

SNC - Southern Nuclear Operating Company

5. Principal Changes from Existing Package

The following paragraphs summarize the principal changes to the existing software that are required for the Seabrook Station system, and are intended only as introductory material. Specifics of the required Seabrook Station EMS functionality are presented in the following sections.

5.1 The EMS software will be developed by customizing the generic EMS package. In general, the most important changes from previous versions are as follows:

5.1.1 Modification to Gaseous Permit Processing to allow scaling of nuclides for Plant Vent Spike release point.

5.1.2 Modification of noble gas dose rate and dose calculation methods to use a third set of X/Q values.

5.1.3 Modification of noble gas dose rate and dose calculation methods to multiply X/Q and D/Q values by a factor depending on the release duration.

5.1.4 Modification to setpoint calculations to calculate setpoints for low gamma concentration releases.

5.1.5 Modification of Permit Processing to automatically correct the expected waste flow if it is greater than the calculated maximum waste flow.

5.1.6 Modification of Liquid Permit Processing to determine dilution flow rate based on the number of pumps operating.

5.1.7 Modification of the permit reports to include Month-to-Date Cumulative Doses and Alert Setpoints.

5.1.8 Modification of Post-Release Permit Processing to update the monitor response.

5.1.9 Addition of data to database to support and control the above operations.

6. EMS Functionality

6.1 Database Maintenance Transactions

The functionality of the EMS Database Maintenance transactions shall be described in section 2 of the EMS Operator's Manual (Reference 2.1.1), with the following revisions:

6.1.1 On the Release Point Setpoint transaction [EM-DM-RP (Form 2)], and the Discharge Point Setpoint transaction [EM-DM-DP (Form 2)], the following parameter shall be added to the list of those which can be entered, stored, and which appear on the printed report for these transactions:

- SCAL_NUC: For a gaseous release, a flag to denote that this release point will have nuclide concentrations scaled so that the total concentration matches a value entered by the user.

6.1.2 On the Release Point Setpoint transaction [EM-DM-RP (Form 2)] and the Discharge Point Setpoint transaction [EM-DM-DP (Form 2)], the following parameter shall be added to the list of those which can be entered, stored, and which appear on the printed report for these transactions:

- DILOOKUP: For a liquid release, a flag to denote that permits for this release point will have a selection screen appear for the user to select the proper dilution flow for the release based on the number of pumps operating.

6.1.3 On the Release Point Setpoint transaction [EM-DM-RP (Form 2)], and the Discharge Point Setpoint transaction [EM-DM-DP (Form 2)], the following parameter shall be added to the list of those which can be entered, stored, and which appear on the printed report for these transactions:

- DEF_NUC: For a liquid or gaseous release, this parameter will contain the default nuclide that will be used in setpoint calculations for low gamma concentration releases. This parameter is used in conjunction with the DEF_CONC parameter.

6.1.4 On the Release Point Setpoint transaction [EM-DM-RP (Form 2)], and the Discharge Point Setpoint transaction [EM-DM-DP (Form 2)], the following parameter shall be added to the list of those which can be entered, stored, and which appear on the printed report for these transactions:

- DEF_CONC: For a liquid or gaseous release, this parameter will contain the default concentration that will be used in setpoint calculations for low gamma concentration releases. This parameter is used in conjunction with the DEF_NUC parameter.

6.1.5 On the Release Point Setpoint transaction [EM-DM-RP (Form 2)], and the Discharge Point Setpoint transaction [EM-DM-DP (Form 2)], the following parameter shall be added to the list of those which can be entered, stored, and which appear on the printed report for these transactions:

- DEF_TYPE: For a liquid or gaseous release, this parameter will contain the default nuclide type that will be used in setpoint calculations for low gamma concentration releases. This parameter is used in conjunction with the DEF_NUC and DEF_CONC parameters. (Note: For a gaseous release, the default nuclide type shall determine which monitor setpoint should use the default nuclide and concentration.)

6.1.6 On the Release Point Setpoint transaction [EM-DM-RP (Form 2)], and the Discharge Point Setpoint transaction [EM-DM-DP (Form 2)], the following parameter shall be added to the list of those which can be entered, stored, and which appear on the printed report for these transactions:

- ALRT_SET: For a liquid or gaseous release, this parameter will contain the multiplier to be used in the calculation of Alert Alarm Setpoints for permit reports.

6.1.7 On the Release Point transaction [EM-DM-RP (Form 1)], the meaning of the Response Option will change. When set to "Y", this option will denote the display of a Monitor Response window during the Post-Release Permit Processing, rather than during the Pre-Release Permit Processing. The Response Option parameter, itself, will remain unchanged for this transaction, but the response entered should include the monitor background values.

6.1.8 On the Dilution Streams transaction [EM-DM-DS], the following parameters will be removed: the number of extra dilution flow rates and the four dilution flow rates.

These parameters will be replaced with two column fields. One column will contain the dilution flow rate, while another will contain the pump configuration description (such as "Jockey Pump" or "5"). In this transaction, the dilution flow rate for particular pump configuration can be added.

6.1.9 On the Meteorological Data transaction [EM-DM-ME (Form 1)], several menu options will added to the list of MET DATA TABLES. These additional menu items are as follows:

X/Q - Noble Gases (Gamma)
"a" Factor - D/Q-Part/Iodines
"a" Factor - Noble Gases
"a" Factor - X/Q-Part/Iodines
"a" Factor - Gamma Noble Gases

6.1.10 On the Meteorological Data transaction [EM-DM-ME (Form 1)], the following menu items will be used to store short-term (1 hour) D/Q and X/Q values.

D/Q - Partics/Radioiodines
X/Q - Partics/Radioiodines
X/Q - Decayed Noble Gases
X/Q - Noble Gases (Gamma)

Note: This specification item only denotes a change in the meaning for the values on this transaction and requires no further changes to the software.

6.1.11 On the Meteorological Data transaction [EM-DM-ME (Form 1)], the X/Q, D/Q, and "a" Factor values are defined for various elevations, distances, and directions from the plant vent or stack. This combination with the "mode of release" parameter on the Release Point transaction [EM-DM-RP (Form 1)], and the receptor definition on the Gas Receptors transaction [EM-DM-GR], allow the X/Q, D/Q, and "a" factors to be different for each receptor and/or release point.

Note: This specification item is only for clarification and no additional code changes need to be made to this transaction.

page 9

6.2 Editing Values through INGRES QBF

In addition to the interactive forms-based EMS Database Maintenance transactions, certain flags and values must be edited through INGRES QBF on the database tables which contain data not accessible through the forms-based transactions.

6.2.1 Some columns of the Quarterly Dilution Volume table (QDVOL), which has no other use in the Seabrook Station version of EMS, will be used for recording monthly dilution volume for use in semi-annual reports. Once per month, an authorized user will use QBF to append a record to the QDVOL table as follows:

sampleid	(sample ID)	0 [not used]
dvdate	(dilution volume date)	The first day of the month to which the volume applies (time not required).
tvol	(total volume)	Dilution volume for the month, in user units.
aflow	(average flowrate)	0 [not used]

6.3 Liquid Pre-Release Processing

6.3.1 User Interface and Functionality

Liquid Pre-Release Processing functionality for the EMS software shall be as described in section 3 of the EMS Operator's Manual (Reference 2.1.1), with the following revisions:

6.3.1.1 On the Liquid Permit Definition Screen (Screen 3.04):

Upon entering the permit definition screen, if the DILOOKUP parameter is set to "Y" for the release point associated with the current permit being processed, the Dilution Flow Rate parameter will default to zero.

If a user uses the "Tab" or "Return" key to exit the Dilution Flow Rate parameter on the Permit Definition Screen and the Dilution Flow Rate parameter has a value of zero, a selection screen with two columns of data will appear. One column will contain the pump configuration description, while the other will contain the dilution flow rate for each associated pump configuration.

Upon selection of the Dilution Flow Rate, the selection screen will disappear and the selected dilution flow rate will appear in the Dilution Flow Rate parameter on the Permit Definition Screen. The cursor will then automatically advance to the Dilution Volume Parameter.

6.3.1.2 On the Liquid Permit Definition Screen (Screen 3.04):

When a "Fill" (F14) or a "Save" (F10) without a "Fill" is executed, if the DILOOKUP parameter is set to "Y" for the release point associated with the current permit being processed and the Dilution Flow Rate parameter is set to zero, a selection screen, as described above will appear.

Once a selection of the Dilution Flow Rate is complete, the selection screen will disappear and the "Fill" operation will continue. Upon completion, the selected dilution flow rate will appear in the Dilution Flow Rate parameter on the Permit Definition Screen.

If the Dilution Flow Rate parameter on the Permit Definition Screen is not set to zero and the DILOOKUP parameter is set to "Y", the fill will proceed as normal <u>without</u> the dilution flow rate selection screen appearing.

6.3.1.3 Prior to entering the Liquid Permit Approval Screen (Screen 3.09):

If it is determined that the computed maximum waste flow is less than the anticipated waste flow, the anticipated waste flow will be changed to have the value of the computed maximum waste flow. If the anticipated waste flow is modified, setpoint, dose, and dose rate values will be recalculated based on the new value.

6.3.1.4 For releases with low or zero gamma emitter concentrations that result in a pre-diluted MPC ratio less than 10%, a default concentration will be used for setpoint calculations. This default concentration will not be used for updating curie, dose rates, or dose totals.

The default nuclide will be attained from the DEF_NUC parameter. The default concentration for this nuclide will be attained from the DEF_CONC parameter. The default type for this nuclide should be attained from the DEF_TYPE parameter.

6.3.1.5 The Monitor Response Screens for Release Points and Discharge Points (Screen 3.08) will no longer appear while processing a Pre-Release Permit when the Response Option is set to "Y" on the Release Point transaction [EM-DM-RP (Form 1)].

6.3.2 Associated Reports

Liquid Pre-Release Permit Reports shall be as described in section 3 (pages 3-53 through 3-58) of the EMS Operator's Manual (Reference 2.1.1), with the following revisions:

6.3.2.1 On the Pre-Release Permit Report (3.01), the Cumulative Month-to-Date Doses will appear on the page with the report category of Cumulative Maximum Individual Dose for Controlling Age Group at Controlling Location. The Month-to-Date dose values will contain the summation of the doses for all "Open" and "Closed" permits including the permit for which the report is being generated. These dose values will appear immediately below the "This Release" row of doses.

6.3.2.2 On the Pre-Release Permit Report (3.01), an Alert Alarm Setpoint will appear below the Max Monitor Setpoint Value. The Alert Alarm Setpoint will be calculated by using the multiplying the release point setpoint value by a multiplier specified with the ALRT_SET parameter mentioned above.

6.3.2.3 On the Liquid Special Report (3.02), an Alert Alarm Setpoint will appear below the Release Point and Discharge Point Setpoint values in the Radiation Monitor(s) portion of the report.

6.3.2.4 On the Pre-Release Permit Report (3.01), the calculation of setpoint data for additional dilution flow rates (under Pre-Release Calculations) will use dilution flow rate values from the Dilution Streams transaction [EM-DM-DS] for a specific dilution stream. Up to four dilution flow rates which are larger than the dilution flow rate parameter entered on the Liquid Permit Definition Screen (3.06) will be used.

6.3.3 Underlying Calculations

The calculations performed by the EMS software for Liquid Pre-Release Permits shall produce the same results as those described in Chapter 2 (sections 2.1-2.6) of the EMS Technical Reference Manual (Reference 2.1.2), with no revisions.

6.4 Liquid Post-Release Processing

6.4.1 User Interface and Functionality

Liquid Post-Release Processing functionality for the EMS software shall be as described in section 3 of the EMS Operator's Manual (Reference 2.1.1), with the following revisions:

6.4.1.1 On the Liquid Permit Definition Screen (Screen 3.13):

If the DILOOKUP parameter is set to "Y" for the release point and a user uses the "Tab" or "Return" key to exit the Dilution Flow Rate parameter on the Permit Definition Screen and the Dilution Flow Rate parameter has a value of zero, a selection screen with two columns of data will appear. One column will contain the pump configuration description, while the other will contain the dilution flow rate for each associated pump configuration.

Upon selection of the Dilution Flow Rate, the selection screen will disappear and the selected dilution flow rate will appear in the Dilution Flow Rate parameter on the Permit Definition Screen. The cursor will then automatically advance to the Dilution Volume Parameter.

6.4.1.2 On the Liquid Permit Definition Screen (Screen 3.13):

When a "Fill" (F14) or a "Save" (F10) without a "Fill" is executed, if the DILOOKUP parameter is set to "Y" for the release point associated with the current permit being processed and the Dilution Flow Rate parameter is set to zero, a selection screen, as described above will appear.

Once a selection of the Dilution Flow Rate is complete, the selection screen will disappear and the "Fill" operation will continue. Upon completion, the selected dilution flow rate will appear in the Dilution Flow Rate parameter on the Permit Definition Screen.

If the Dilution Flow Rate parameter on the Permit Definition Screen is not set to zero and the DILOOKUP parameter is set to "Y", the fill will proceed as normal <u>without</u> the dilution flow rate selection screen appearing.

6.4.1.3 (Item removed since actual waste flow is known at time of post release processing.)

6.4.1.4 The Monitor Response Screens for Release Points and Discharge Points (Screen 3.08) will appear while processing a Post-Release Permit when the Response Option is set to "Y" on the Release Point transaction [EM-DM-RP (Form 1)]. These screens will appear following the Nuclide Concentration Screen (Screen 3.15). The monitor response values entered should include the monitor background values.

6.4.2 Associated Reports

Liquid Post-Release Permit Report shall be as described in section 3 (pages 3-59 through 3-62 of the EMS Operator's Manual (Reference 2.1.1), with the following revisions:

6.4.2.1 On the Post-Release Permit Report (3.03), the Cumulative Month-to-Date Doses will appear on the page with the report category of Cumulative Maximum Individual Dose for Controlling Age Group at Controlling Location. The Month-to-Date dose values will contain the summation of the doses for all "Open" and "Closed" permits including the permit for which the report is being generated. These dose values will appear immediately below the "This Release" row of doses.

6.4.3 Underlying Calculations

The calculations performed by the EMS software for Liquid Post-Release Permits shall produce the same results as those described in Chapter 2 (section 2.7) of the EMS Technical Reference Manual (Reference 2.1.2), with no revisions.

6.5 Liquid Permit Editing

6.5.1 User Interface and Functionality

Functionality for editing liquid permits through the EMS software shall be as described in section 3 of the EMS Operator's Manual (Reference 2.1.1), with the following revisions:

The appearance and functionality of the liquid permit definition screen and the monitor response screen shall be modified as described for the Pre-Release stage in sections 6.3.1 and 6.4.1 above.

6.5.2 Associated Reports

The permit report format and contents for edited open and closed liquid permits shall be as specified above for original permit reports, in sections 6.3.2 and 6.4.2, respectively.

6.5.3 Underlying Calculations

The calculation methods for editing open and closed liquid permits shall be as specified above for original calculations, in sections 6.3.3 and 6.4.3, respectively.

6.6 Liquid Permit Deletion

Functionality for deleting liquid permits through the EMS software shall be described section 3 or the EMS operator's Manual (Reference 2.1.1).

6.7 Gaseous Pre-Release Processing

6.7.1 User Interface and Functionality

Gaseous Pre-Release Processing functionality for the EMS software shall be as described in section 4 of the EMS Operator's Manual (Reference 2.1.1), with the following revisions:

6.7.1.1 On the Gaseous Permit Definition Screen (Screen 4.05):

The Initial Pressure and Final Pressure parameters shall be deleted.

6.7.1.2 On the Gaseous Nuclide Concentration Screen (Screen 4.06):

If the SCAL_NUC parameter is set to "Y", when exiting the Concentration Screen by hitting "Process" (Do), the user will be prompted for the total nuclide concentration of permit. The concentrations are then "scaled" and then stored internally. As a result, the concentrations displayed on the screen will remain unchanged. (See the Underlying Calculations section for Pre-Release Permit Processing for an explanation of the "scaling" of concentrations.)

NOTE: This method requires the VAX_GSP (F12) file transfer has occurred bringing the representative nuclide concentration values to the screen prior to "Save" of data.

6.7.1.3 For releases with low or zero gamma emitter concentrations that result in a pre-diluted MPC ratio less than 10%, a default concentration will be used for setpoint calculations. This default concentration will not be used for updating curie, dose rates, or dose totals.

The default nuclide will be attained from the DEF_NUC parameter. The default concentration for this nuclide will be attained from the DEF_CONC parameter. The default type for the default nuclide should be attained from the DEF_TYPE parameter.

6.7.1.4 The Monitor Response Screens for Release Points and Discharge Points (Screen 4.08) will no longer appear while processing a Pre-Release Permit when the Response Option is set to "Y" on the Release Point transaction [EM-DM-RP (Form 1)].

6.7.1.5 Prior to entering the Gaseous Permit Approval Screen (Screen 4.09):

If it is determined that the computed maximum waste flow is less than the anticipated waste flow, the anticipated waste flow will be changed to have the value of the computed maximum waste flow. If the anticipated waste flow is modified, setpoint, dose, and dose rate values will be recalculated based on the new value.

6.7.2 Associated Reports

Gaseous Pre-Release Permit Reports shall be as described in section 4 (pages 4-49 through 4-58) of the EMS Operator's Manual (Reference 2.1.1), with the following revisions:

6.7.2.1 On the Pre-Release Permit Report (4.01), the Cumulative Month-to-Date Doses will appear on the pages with the report category of Cumulative Dose at Site Boundary and Cumulative Maximum Individual Dose for Controlling Age Group at Controlling Location. The Month-to-Date dose values will contain the summation of the doses for all "Open" and "Closed" permits including the permit for which the report is being generated. These dose values will appear immediately below the "This Release" row of doses.

6.7.2.2 On the Pre-Release Permit Report (4.01), the "scaled" noble gas concentrations shall appear on the Isotopic Identification page of the report if the SCAL_NUC parameter is set to "Y" for the release point where the release is being made.

6.7.2.3 On the Pre-Release Permit Report (4.01), the Noble Gas Alert Alarm Setpoint will appear below the Max Monitor Setpoint values. The Alert Alarm Setpoint will be calculated by multiplying the noble gas monitor setpoint value by a multiplier specified with the ALRT_SET parameter mentioned above.

6.7.2.4 On the Gaseous Special Report (4.02), the Noble Gas Alert Alarm Setpoint will appear below the Release Point and Discharge Point Setpoint values in the Radiation Monitor(s) portion of the report. It will be calculated as mentioned above.

6.7.2.5 On the Pre-Release Permit Report (4.01), the Initial and Final Pressure parameters will be removed from the Pre-Release Data section of page one of the report.

6.7.3 Underlying Calculations

The calculations performed by the EMS software for Gaseous Pre-Release Permits shall produce the same results as those described in Chapter 3 (section 3.1-3.6) of the EMS Technical Reference Manual (Reference 2.1.2), with the following revisions and clarifications:

6.7.3.1 Dose Calculations will appear in the site specific technical reference manual as follows:

- For Noble Gas Total Body Dose Rate (for vents or stacks < 80 meters):

$$D_t = shf \cdot X/Q_g \cdot 8760^{-a} \cdot F_o \cdot \Sigma (K_i \cdot QR_{iv})$$

where

D_t = the total body dose rate due to gamma emissions by noble gas releases from vent v (mrem/yr)

shf = shielding factor (dimensionless)

QR_{iv} = release rate of noble gas radionuclides, i, in gaseous effluents from vent or stack v (μCi/sec).

F_o = occupancy factor defined for the receptor at the given location (dimensionless)

K_i = total body dose factor due to gamma emissions for noble gas radionuclide i (mrem/yr per $\mu Ci/m^3$)

X/Q_g = highest value of the noble gas 1-hour X/Q for gamma radiation for vent or stack v at the site boundary, (sec/m^3)

8760^{-a} = adjustment factor used to convert the 1-hour X/Q value to an average 1 year X/Q value (dimensionless)

where

8760 = number of hours in a year

a = "a" factor for gamma noble gas X/Q

- For Noble Gas Total Body Dose (for vents or stacks < 80 meters):

$$D_{tb} = \frac{shf \cdot F_o \cdot \Sigma (K_i \cdot QR_{iv}) \cdot X/Q_g \cdot t^{-a}}{(5.256 \cdot 10^5 / dur)}$$

where

D_{tb} = total body dose from gaseous effluents (mrem)

$5.256 \cdot 10^5$ = number of minutes in a year

dur = duration of the release (minutes)

t^{-a} = adjustment factor to convert the 1-hour X/Q value to the short term X/Q value for the release (dimensionless)

where

t = duration of release (hours)

a = "a" factor for gamma noble gas X/Q

- For Noble Gas Skin Dose Rate (for vents or stacks < 80 meters):

$$D_s = shf \cdot F_o \cdot \Sigma\, QR_{iv} \cdot [(L_i \cdot X/Q \cdot 8760^{-b}) + (1.11 M_i \cdot X/Q_g \cdot 8760^{-a})]$$

where

D_s = skin dose rate from gaseous effluents (mrem/yr)

X/Q = highest value of the noble gas 1-hour X/Q for vent or stack v at the site boundary (sec/m^3)

M_i = air dose factor due to gamma emissions for noble gas radionuclide i (mrad/yr per μCi/m^3)

1.11 = conversion factor from mrad to mrem

L_i = skin dose factor due to beta emissions for noble gas radionuclide i (mrem/yr per μCi/m^3)

b = "a" factor for noble gas X/Q

- For Noble Gas Skin Dose (for vents or stacks < 80 meters):

$$D_{sk} = \frac{shf \cdot F_o \cdot \Sigma\, QR_{iv} \cdot [(L_i \cdot X/Q \cdot t^{-b}) + (1.11 M_i \cdot X/Q_g \cdot t^{-a})]}{(5.256 \cdot 10^5 / dur)}$$

where

D_{sk} = total skin dose from gaseous effluents (mrem)

- For Noble Gas Air Dose due to gamma radiation (for vents or stacks < 80 meters):

$$D_\gamma = (3.17 \cdot 10^{-8}) \cdot X/Q_g \cdot t^{-a} \cdot F_o \cdot \Sigma M_i \cdot Q_{iv}$$

where

D_γ = total gamma air dose from gaseous effluents (mrad)

$3.17 \cdot 10^{-8}$ = inverse of number of seconds in a year

Q_{iv} = release of noble gas radionuclides, i, in gaseous effluents from vent or stack v (μCi)

$Q_{iv} = QR_{iv} \cdot dur \cdot 60$

where

60 = number of seconds in a minute

- For Noble Gas Air Dose due to beta radiation (for vents or stacks < 80 meters):

$$D_\beta = (3.17 \cdot 10^{-8}) \cdot X/Q \cdot t^{-b} \cdot F_o \cdot \Sigma N_i \cdot Q_{iv}$$

where

D_β = total beta air dose from gaseous effluents (mrad)

N_I = air dose factor due to beta emissions for noble gas radionuclide i (mrad/yr per $\mu Ci/m^3$)

- For Critical Organ Dose Rate–Inhalation Pathway and all Pathways for H-3, C-14 (for vents or stacks < 80 meters):

$$DR_{\tau a} = X/Q_r \cdot 8760^{-c} \cdot \Sigma P_{ip\tau a} \cdot QR_{iv}$$

where

$DR_{\tau a}$ = dose rate for age group a and organ τ from iodines and particulates with half lives greater than 8 days in gaseous effluents (mrem/yr)

$P_{ip\tau a}$ = dose factor for each radionuclide i, pathway p, organ τ, and age group a (mrem/yr per $\mu Ci/m^3$)

X/Q_r = highest value of the radioiodine/particulate 1-hour X/Q for vent or stack v at the site boundary (sec/m^3)

c = "a" factor for Radioiodine/Particulate X/Q

Note: It is assumed $P_{ip\tau a}$ will not contain long term X/Q or D/Q values.

- For Critical Organ Dose Rate--Ground and Food Pathways (for vents or stacks < 80 meters):

$$DR_{\tau a} = D/Q \cdot 8760^{-d} \cdot \Sigma R_{ip\tau a} \cdot QR_{iv}$$

where

D/Q = highest value of the 1-hour deposition factor at the distance of the site boundary (1/m^2)

d = "a" factor for D/Q

$R_{ip\tau a}$ = dose factor for each radionuclide i, pathway p, organ τ, and age group a (m^2 • mrem/yr per μCi/sec)

Note: It is assumed $R_{ip\tau a}$ will not contain long term X/Q or D/Q values.

- For Critical Organ Dose-Inhalation Pathway and all Pathways for H-3, C-14 (for vents or stacks < 80 meters):

$$D_{\tau a} = (3.17 \cdot 10^{-8}) \cdot X/Q_r \cdot t^{-c} \cdot F_o \cdot \Sigma P_{ip\tau a} \cdot Q_{iv}$$

where

$D_{\tau a}$ = dose for age group a and organ τ from iodines and particulates with half lives greater than 8 days in gaseous effluents (mrem)

Note: It is assumed $P_{ip\tau a}$ will not contain long term X/Q or D/Q values.

- For Critical Organ Dose-Ground and Food Pathways (for vents or stacks < 80 meters):

$$D_{\tau a} = (3.17 \cdot 10^{-8}) \cdot D/Q \cdot t^{-d} \cdot F_o \cdot \Sigma R_{ip\tau a} \cdot Q_{iv}$$

Note: It is assumed $R_{ip\tau a}$ will not contain long term X/Q or D/Q values.

6.7.3.2 On the Nuclide Concentration Screen (Screen 4.06), nuclide concentrations will be "scaled" if the SCAL_NUC parameter is set properly for a Release Point. This "scaling" is described as follows:

$$C_{inew} = (t / s) \cdot C_i$$

where

C_{inew} = concentration (after "scaling") of nuclide$_i$
s = sum of all nuclide concentrations on the Nuclide Concentration Screen.
t = total nuclide concentration entered by the user
C_i = concentration (before "scaling") of nuclide$_i$

6.8 Gaseous Post-Release Processing

6.8.1 User Interface and Functionality

Gaseous Post-Release Processing functionality for the EMS software shall be as described in section 4 of the EMS Operator's Manual (Reference 2.1.1), with the following revisions:

6.8.1.1 On the Gaseous Permit Definition Screen (Screen 4.14):

The Initial Pressure and Final Pressure parameters shall be deleted.

6.8.1.2 On the Gaseous Nuclide Concentration Screen (Screen 4.15):

If the SCAL_NUC parameter is set to "Y", when exiting the Concentration Screen by hitting "Process" (Do), the user will be prompted for the total nuclide concentration of permit. The value entered for the total nuclide concentration while opening the permit shall be displayed as a default value which can be modified. Once the value is entered/accepted the concentrations are then "scaled" and then stored internally. As a result, the concentrations displayed on the screen will remain unchanged. (See the Underlying Calculations section for Post-Release Permit Processing for an explanation of the "scaling" of concentrations.)

NOTE: This method requires the VAX_GSP (F12) file transfer has occurred bringing the representative nuclide concentration values to the screen prior to "Save" of data.

6.8.1.3 The Monitor Response Screens for Release Points and Discharge Points (Screen 4.08) will appear while processing a Post-Release Permit when the Response Option is set to "Y" on the Release Point transaction [EM-DM-RP (Form 1)]. These screens will appear following the Nuclide Concentration Screen (Screen 4.15). The monitor response values should include the monitor background values.

6.8.1.4 (Item removed since actual waste flow is known at time of post release processing.)

6.8.2 Associated Reports

Gaseous Post-Release Permit Reports shall be as described in section 4 (pages 4-58 through 4-63) of the EMS Operator's Manual (Reference 2.1.1), with the following revisions:

6.8.2.1 On the Post-Release Permit Report (4.03), the Cumulative Month-to-Date Doses will appear on the pages with the report category of Cumulative Dose at Site Boundary and Cumulative Maximum Individual Dose for Controlling Age Group at Controlling Location. The Month-to-Date dose values will contain the summation of the doses for all "Open" and "Closed" permits including the permit for which the report is being generated. These dose values will appear immediately below the "This Release" row of doses.

6.8.2.2 On the Post-Release Permit Report (4.03), the "scaled" noble gas concentrations shall appear on the Isotopic Identification page of the report if the SCAL_NUC parameter is set to "Y" for the release point where the release is being made.

6.8.2.3 On the Post-Release Permit Report (4.03), the Initial and Final Pressure parameters will be removed from the Pre-Release Data section of page one of the report.

6.8.3 Underlying Calculations

The calculations performed by the EMS software for Gaseous Post-Release Permits shall produce the same results as those described in Chapter 3 (section 3.7) of the EMS Technical Reference Manual (Reference 2.1.2), with the following revisions and clarifications:

6.8.3.1 Dose Calculations will appear in the site specific technical reference manual as follows:

- For Noble Gas Total Body Dose Rate (for vents or stacks < 80 meters):

$$D_t = shf \cdot X/Q_g \cdot 8760^{-a} \cdot F_o \cdot \Sigma (K_i \cdot QR_{iv})$$

where

D_t = the total body dose rate due to gamma emissions by noble gas releases from vent v (mrem/yr)

shf = shielding factor (dimensionless)

QR_{iv} = release rate of noble gas radionuclides, i, in gaseous effluents from vent or stack v (μCi/sec).

F_o = occupancy factor defined for the receptor at the given location (dimensionless)

K_i = total body dose factor due to gamma emissions for noble gas radionuclide i (mrem/yr per $\mu Ci/m^3$)

X/Q_g = highest value of the noble gas 1-hour X/Q for gamma radiation for vent or stack v at the site boundary, (sec/m^3)

8760^{-a} = adjustment factor used to convert the 1-hour X/Q value to an average 1 year X/Q value (dimensionless)

where

8760 = number of hours in a year

a = "a" factor for gamma noble gas X/Q

- For Noble Gas Total Body Dose (for vents or stacks < 80 meters):

$$D_{tb} = \frac{shf \cdot F_o \cdot \Sigma (K_i \cdot QR_{iv}) \cdot X/Q_g \cdot t^{-a}}{(5.256 \cdot 10^5 / dur)}$$

where

D_{tb} = total body dose from gaseous effluents (mrem)

$5.256 \cdot 10^5$ = number of minutes in a year

dur = duration of the release (minutes)

t^{-a} = adjustment factor to convert the 1-hour X/Q value to the short term X/Q value for the release (dimensionless)

where

t = duration of release (hours)

a = "a" factor for gamma noble gas X/Q

- For Noble Gas Skin Dose Rate (for vents or stacks < 80 meters):

$$D_s = shf \cdot F_o \cdot \Sigma QR_{iv} \cdot [(L_i \cdot X/Q \cdot 8760^{-b}) + (1.11 M_i \cdot X/Q_g \cdot 8760^{-a})]$$

where

D_s = skin dose rate from gaseous effluents (mrem/yr)

X/Q = highest value of the noble gas 1-hour X/Q for vent or stack v at the site boundary (sec/m^3)

M_i = air dose factor due to gamma emissions for noble gas radionuclide i (mrad/yr per $\mu Ci/m^3$)

1.11 = conversion factor from mrad to mrem

L_i = skin dose factor due to beta emissions for noble gas radionuclide i (mrem/yr per $\mu Ci/m^3$)

b = "a" factor for noble gas X/Q

- For Noble Gas Skin Dose (for vents or stacks < 80 meters):

$$D_{sk} = \frac{shf \cdot F_o \cdot \Sigma\, QR_{iv} \cdot [(L_i \cdot X/Q \cdot t^{-b}) + (1.11 M_i \cdot X/Q_g \cdot t^{-a})]}{(5.256 \cdot 10^5 / dur)}$$

where

D_{sk} = total skin dose from gaseous effluents (mrem)

- For Noble Gas Air Dose due to gamma radiation (for vents or stacks < 80 meters):

$$D_\gamma = (3.17 \cdot 10^{-8}) \cdot X/Q_g \cdot t^{-a} \cdot F_o \cdot \Sigma\, M_i \cdot Q_{iv}$$

where

D_γ = total gamma air dose from gaseous effluents (mrad)

$3.17 \cdot 10^{-8}$ = inverse of number of seconds in a year

Q_{iv} = release of noble gas radionuclides, i, in gaseous effluents from vent or stack v (μCi)

$Q_{iv} = QR_{iv} \cdot dur \cdot 60$

where

60 = number of seconds in a minute

- For Noble Gas Air Dose due to beta radiation (for vents or stacks < 80 meters):

$$D_\beta = (3.17 \cdot 10^{-8}) \cdot X/Q \cdot t^{-b} \cdot F_o \cdot \Sigma N_i \cdot Q_{iv}$$

where

D_β = total beta air dose from gaseous effluents (mrad)

N_i = air dose factor due to beta emissions for noble gas radionuclide i (mrad/yr per μCi/m^3)

- For Critical Organ Dose Rate--Inhalation Pathway and all Pathways for H-3, C-14 (for vents or stacks < 80 meters):

$$DR_{\tau a} = X/Q_r \cdot 8760^{-c} \cdot \Sigma P_{ip\tau a} \cdot QR_{iv}$$

where

$DR_{\tau a}$ = dose rate for age group a and organ τ from iodines and particulates with half lives greater than 8 days in gaseous effluents (mrem/yr)

$P_{ip\tau a}$ = dose factor for each radionuclide i, pathway p, organ τ, and age group a (mrem/yr per μCi/m^3)

X/Q_r = highest value of the radioiodine/particulate 1-hour X/Q for vent or stack v at the site boundary (sec/m^3)

c = "a" factor for Radioiodine/Particulate X/Q

Note: It is assumed $P_{ip\tau a}$ will not contain long term X/Q or D/Q values.

- For Critical Organ Dose Rate--Ground and Food Pathways (for vents or stacks < 80 meters):

$$DR_{\tau a} = D/Q \cdot 8760^{-d} \cdot \Sigma R_{ip\tau a} \cdot QR_{iv}$$

where

D/Q = highest value of the 1-hour deposition factor at the distance of the site boundary (1/m^2)

d = "a" factor for D/Q

$R_{ip\tau a}$ = dose factor for each radionuclide i, pathway p, organ τ, and age group a (m^2 • mrem/yr per μCi/sec)

Note: It is assumed $R_{ip\tau a}$ will not contain long term X/Q or D/Q values.

- For Critical Organ Dose-Inhalation Pathway and all Pathways for H-3, C-14 (for vents or stacks < 80 meters):

$$D_{\tau a} = (3.17 \cdot 10^{-8}) \cdot X/Q_r \cdot t^{-c} \cdot F_o \cdot \Sigma P_{ip\tau a} \cdot Q_{iv}$$

where

$D_{\tau a}$ = dose for age group a and organ τ from iodines and particulates with half lives greater than 8 days in gaseous effluents (mrem)

Note: It is assumed $P_{ip\tau a}$ will not contain long term X/Q or D/Q values.

- For Critical Organ Dose-Ground and Food Pathways (for vents or stacks < 80 meters):

$$D_{\tau a} = (3.17 \cdot 10^{-8}) \cdot D/Q \cdot t^{-d} \cdot F_o \cdot \Sigma R_{ip\tau a} \cdot Q_{iv}$$

Note: It is assumed $R_{ip\tau a}$ will not contain long term X/Q or D/Q values.

6.8.3.2 On the Nuclide Concentration Screen (Screen 4.15), nuclide concentrations will be "scaled" if the SCAL_NUC parameter is set properly for a Release Point. This "scaling" is described as follows:

$$C_{inew} = (t / s) \cdot C_i$$

where

C_{inew} = concentration (after "scaling") of $nuclide_i$
s = sum of all nuclide concentrations on the Nuclide Concentration Screen.
t = total nuclide concentration entered by the user
C_i = concentration (before "scaling") of $nuclide_i$

page 29

6.9 Gaseous Permit Editing

6.9.1 User Interface and Functionality

Functionality for editing gaseous permits through the EMS software shall be described in section 4 of the EMS Operator's Manual (Reference 2.1.1), with the following revisions:

The appearance and functionality of the gaseous permit definition screen, the monitor response screen, and nuclide concentration shall be modified as described for the Pre- and Post-Release stages in sections 6.7.1 and 6.8.1 above.

6.9.2 Associated Reports

The permit report format and contents for edited open and closed gaseous permits shall be as specified above for original permit reports, in sections 6.7.2 and 6.8.2, respectively.

6.9.3 Underlying Calculations

The calculation methods for editing open and closed gaseous permits shall be specified for original calculations, in sections 6.7.3 and 6.8.3, respectively.

6.10 Gaseous Permit Deletion

Functionality for deleting gaseous permits through the EMS software shall be described section 4 or the EMS operator's Manual (Reference 2.1.1).

6.11 Semi-Annual Reporting

6.11.1 User Interface and Functionality

Semi-Annual Reporting functionality for the EMS software shall be as described in section 5 of the EMS Operator's Manual (Reference 2.1.1), with the following revisions:

6.11.1.1 On Report 5.01 (Gaseous Summation of All Releases):

- Compute each value on line A.3 of the report by taking

$$\text{the greater of} \quad \begin{cases} 100 \cdot D_{ag} / QL_{ag} \\ 100 \cdot D_{ab} / QL_{ab} \end{cases}$$

where

D_{ag} = the gamma air dose in the applicable quarter at the site boundary receptor due to noble gas emissions (mrem)

D_{ab} = the beta air dose in the applicable quarter at the site boundary due to noble gas emissions (mrem)

QL_{ag} = the quarterly limit on D_{ag} (mrem) [usually 5]

QL_{ab} = the quarterly limit on D_{ab} (mrem) [usually 10]

A note will be made at the bottom of the report stating whether the beta air dose and its associated limit or gamma air dose and its associated limit were used for the Percent of Applicable Limit of Fission and Activation Products..

- The values on lines B.3, C.3, and D.3 will be the equivalent. They will be calculated as follows:

$$\text{the greatest (over T) of} \quad \{ 100 \cdot (\Sigma \ D_{i,T}) / QL_{rp}$$

where

$D_{i,T}$ = the dose to organ T of the controlling receptor, in the applicable quarter, due to gaseous emissions of radionuclide i (mrem)

The summation is over all non-noble gas radionuclides with half-lives greater than 8 days, including radioiodines, particulates, and tritium.

QL_{rp} = the quarterly limit on the controlling receptor organ dose due to gaseous effluents (mrem) [usually 7.5]

6.11.1.2 On Report 5.02 (Liquid Summation of All Releases):

- For each quarter q in the report, calculate the reportable dilution volume (DV_{rq}, in liters) for the portion of the quarter that is within the report dates. It is the sum of the reportable monthly dilution volumes (DV_{rm}) in user units for all the months in the quarter that are within the report dates:

$$DV_{rq} = 28.31685 \cdot sd_lvolf \cdot \Sigma\, DV_{rm}$$

The values DV_{rm} are from the column tvol of the QDVOL table. The value DV_{rq} is included in the report on line F, and is used in the calculations below. "sd_lvolf" should be the user unit conversion factor to convert from user units to ft^3. 28.31685 is a unit conversion factor from ft^3 to liters.

- For each space on a line titled "AVERAGE DILUTED CONCENTRATION DURING PERIOD", the average concentration (Cq, in μCi/ml) for the respective quarter is computed as follows (where i ranges over only the nuclides in the category):

$$C_q = \Sigma\, C_{iq} = \Sigma\, [Act_{iq} / (1000 \cdot DV_{rq})]$$

where

Act_{iq} = total activity of nuclide i released during the portion of the quarter q that is within the period (μCi)

DV_{rq} = reportable dilution flow for the portion of quarter q that is within the report period (liters), as calculated above.

- Compute each value on line A.3 and B.3 of the report by taking

the greater of $\begin{cases} 100 \cdot D_{It} / QL_{It} \\ 100 \cdot D_{Io} / QL_{Io} \end{cases}$

where

D_{lt} = the liquid total body dose in the applicable quarter at the site boundary receptor (mrem)

D_{lo} = the liquid maximum organ dose in the applicable quarter at the site boundary (mrem)

QL_{lt} = the quarterly limit on D_{lt} (mrem) [usually 1.5]

QL_{lo} = the quarterly limit on D_{lo} (mrem) [usually 5]

A note will be made at the bottom of the report stating whether the liquid total body dose and its associated limit or maximum organ dose and its associated limit were used for the Percent of Applicable Limit.

- Compute each value on line C.3 of the report as follows:

$$P_q = 100 \cdot C_q / L_{dg}$$

where

C_q = sum of noble gas concentrations

P_q = Percentage applicable to a given quarter for dissolved and entrained gases

L_{dg} = Liquid dissolved gas limit (μCi/ml) [usually 2.0E-04]

6.11.2 EMS Trend Plots

Trend Plotting functionality for the EMS software shall be described in section 5 of the EMS Operator's Manual (Reference 2.1.1) with no revisions.

6.12 End-of-the-Year Data Archiving

6.12.1 User Interface and Functionality

End-of-the-Year Data Archiving functionality for the EMS software shall be described in section 6 of the EMS Operator's Manual (Reference 2.1.1) with no revisions.

Documentation Review Report

Document Reviewed SRS SEABROOK STATION EMIS RS-8448-04

Does the document meet the requirements? Yes or No

Is the document approved? Yes or No

If not please state the exceptions:

Signature: Peter von der Heide Date: 9/15-93

page 34

03-5792

Documentation Review Report

Document Reviewed JRS (25-8448-04) SEARBROOK EMS

Does the document meet the requirements? Yes or No

Is the document approved? Yes or No

If not please state the exceptions:

Signature: Lauren Gillette Date: 9/17/93

page 35

00-5792

APPENDIX C: EMS SOFTWARE DOCUMENTATION

ATTACHMENT 4: TECHNICAL REFERENCE MANUAL, EFFLUENT MANAGEMENT SYSTEM

NAESCO SEABROOK STATION, JULY 1994, FP 75486

Canberra Industries, Inc.
800 Research Parkway
Meriden, CT 06450

July 1994

NAESCO Seabrook Station
EMS Technical Reference Manual
07-0625

Copyright 1994, Canberra Industries, Inc.
Printed in U.S.A.

Cover

Pg 36
ODCM Rev22

Copyright 1994, Canberra Industries, Inc. All rights reserved.

This manual contains proprietary information; no part of it may be reproduced or used in any form or by any means – graphic, electronic, or mechanical, including photocopying, recording, or information storage and retrieval systems – without the written permission of Canberra Industries.

The information in this manual describes the product as accurately as possible, but is subject to change without notice.

Printed in the United States of America.

TABLE OF CONTENTS

Cover A .. 1-11

Page

CHAPTER 1 INTRODUCTION 1-1

1.1 SETPOINT CALCULATIONS 1-2
1.2 RELEASE PROCESSING 1-3
1.3 COMPOSITE NUCLIDES 1-3
1-4

CHAPTER 2 LIQUID RELEASE CALCULATIONS 2-1

2.1 LIQUID PRE-RELEASE PERMIT 2-1
2.2 10CFR20 COMPLIANCE 2-1
Dissolved and Entrained Gases 2-4
2.3 MAXIMUM WASTE FLOW 2-4
2.4 MINIMUM DILUTION FLOW RATE 2-5
2.5 SETPOINT CALCULATIONS 2-5
Recommended Setpoint 2-8
Setpoint in μCi/ml 2-8
Recommended Setpoint in User Units (e.g. cpm) 2-10
Setpoint for Discharge Point 2-11
Setpoints in μCi/sec 2-13
2.6 DOSE CALCULATIONS FOR LIQUID RELEASES 2-13
2.7 31 DAY PROJECTED DOSE CALCULATIONS 2-17
2.8 POST-RELEASE PROCESSING 2-18

CHAPTER 3 GASEOUS RELEASE CALCULATIONS 3-1

3.1 GAS PRE-RELEASE PERMIT 3-1
3.2 RADIONUCLIDE ACTIVITIES AND COMPOSITE VALUES 3-1
Activity Released 3-2
3.3 10CFR20 COMPLIANCE 3-2
3.4 SETPOINT DETERMINATION 3-5
Noble Gases 3-5
Radioiodines and Particulates 3-6
3.4a SETPOINTS 3-6
3.4b REPORTED SETPOINTS 3-10
Setpoints in μCi/sec 3-11
3.5 MAXIMUM WASTE FLOW 3-12
3.6 DOSE RATE AND CUMULATIVE DOSE CALCULATIONS 3-12
Noble Gas Dose and Dose Rate Calculations 3-12

Organ Dose Calculations 3-15
3.7 RESOLVING DOUBLE-COUNTING OF DOSE AND ACTIVITY 3-16
3.8 31 DAY PROJECTED DOSE CALCULATIONS 3-17
3.9 GAS POST-RELEASE PROCESSING 3-18

CHAPTER 4 LIQUID DOSE FACTOR EQUATIONS 4-1

4.1 POTABLE WATER 4-2
4.2 AQUATIC FOODS PATHWAYS 4-2
4.3 SHORELINE RECREATION PATHWAY 4-3
4.4 IRRIGATED VEGETABLE PATHWAY 4-4
4.5 REDUCTION TO NUREG-0133 EQUATIONS 4-5

CHAPTER 5 GAS DOSE FACTOR CALCULATIONS 5-1

5.1 INHALATION PATHWAY 5-1
5.2 GROUND PLANE PATHWAY 5-2
5.3 MILK PATHWAY 5-2
Carbon-14 in Milk 5-4
Tritium in Milk 5-4
5.4 MEAT PATHWAY 5-5
Carbon-14 in Meat 5-5
Tritium in Meat 5-6
5.5 VEGETABLE PATHWAY 5-6
Carbon-14 in Vegetables 5-7
Tritium in Vegetables 5-7
5.6 REDUCTION TO NUREG-0133 EQUATIONS 5-7
5-8

APPENDIX A REFERENCES A-1
A-2

PG 39
ODCM Rev 22

CHAPTER 1

INTRODUCTION

The Effluent Management System (EMS) Software implements the requirements for determining limits and doses for the routine liquid and gaseous releases from nuclear power plants. The calculations and methodology are based on those described in U. S. Nuclear Regulatory Commission Regulatory Guide 1.109 and references described therein. These equations reduce to those described in NUREG-0133 by proper selection of parameters.

This manual describes the calculations used in the LRW/GRW program for handling liquid and gaseous releases and preparing the semi-annual report, and the equations used in the DFP option for calculating the relevant dose factors.

This manual describes the new 10CFR20 (1992) as well as old 10CFR20 requirements.

For a nuclear power plant, the Off-Site Dose Calculation Manual (ODCM) describes the methods used at that plant for complying with the effluent release portions of the technical specifications and the requirements of 10CFR20 and Appendix I of 10CFR50.

The concentration and dose limits that are required to be met are:

- For radioactive liquid effluents, the concentrations released to areas beyond the site boundary are limited to:

  MPC values given in old 10CFR20, Appendix B, Table II.
  OR
  ECL values given in new 10CFR20, Appendix B, Table 2.

  where ECL values are effluent concentration limit values.

- For radioactive liquid effluents, the maximum dose to any member of the public will be less than the limits given in 10CFR50, Appendix I.

- For gaseous effluents, the old 10CFR20 requires that the dose rate at any location beyond the site boundary will be limited to the annual dose limits given in the Technical Specifications and corresponding to the concentrations in Appendix B of the old 10CFR20. The old 10CFR20 approach for gaseous effluents has been accepted by the NRC for use under the new 10CFR20.

- For gaseous effluents, the maximum dose to any member of the public will be less than the limits given in 10CFR50, Appendix I.

- The maximum dose to any member of the public will not exceed the limits given in 40CFR190.

The equations employed for calculating the dose and dose factors are taken from NUREG-0133[1] and Regulatory Guide 1.109.[2]

For a particular nuclear plant, the ODCM describes the physical configuration of release sources and release points for routine and non-routine liquid and gaseous effluents, the monitor setpoint calculations, dose, and dose rate calculations.

1.1 SETPOINT CALCULATIONS

Calculations are made for the radiation monitors to determine the alarm/trip setpoint so that 10CFR20 compliance is met. For the old 10CFR20 compliance, liquid calculations use the maximum permissible concentrations from 10CFR20 App. B, Table 2, column 2, and the more conservative value (smaller) of the soluble and insoluble values while gas calculations use dose rate equations and limits from NUREG-0133. To comply with the new 10CFR20 requirements, the effluent concentration limits are used for liquid setpoint calculations. For gaseous setpoint calculations under the new 10CFR20, the NRC is still allowing the use of dose rate equations and limits from NUREG-0133..

In the terminology of EMS, individual sources of radiation, such as storage tanks, the containment building, etc., are defined as "release points." Several release points may lead to the same "discharge point."

Setpoint calculations produce monitor limiting values in activity units (μCi/ml or μCi/cc). These are then converted to user units, e.g. counts per minute (cpm). For gaseous releases, setpoint can be reported as release rates (μCi/sec). The reporting units for each monitor can be defined separately.

EMS allows setpoints to be set for both the release points and the discharge points. In the case that the release point and the discharge point are the same, or use the same physical monitor, the same discharge setpoint value is reported for both. This use of the same discharge setpoint value can be disabled.

Pg 41
ODCM rev22

EMS has a "nuclide specific" option. In this option only the nuclides listed in the monitor slope table are used in the setpoint calculations.

1.2 RELEASE PROCESSING

For batch releases, the processing of releases consists of sampling the tank or volume of air, analyzing the radionuclide content, then using the radionuclide concentrations and estimated release flows, volumes, etc. and calculating the doses and setpoints, comparing to the 10CFR20 limits, and comparing to the 10CFR50 limits. If the limits are not exceeded, the pre-release permit is signed off and the release can occur. After the release, post-release processing performs the same calculations (except the setpoints are not needed) and the database is updated with the actual values for the release.

For continuous releases, many installations prefer not to generate an actual pre-release permit, but for the sake of analogous operation, pre-release calculations must still be made in EMS. After review, the post-release calculations are made to update the database.

EMS does not allow more that one open release at a time for a single release point. However, multiple releases may be open for one discharge point. Also, for discharge points, the setpoint is calculated by summing over all open releases for the time period involved. An alternative approach if a new permit must be opened before the actual information for the previous permit are available is to go ahead and close the release using the pre-release values and then edit this closed release later when the actual information becomes available.

1.3 COMPOSITE NUCLIDES

The standard radionuclide analysis, with high-resolution germanium detectors, quantifies the gamma-emitting radionuclides. Pure beta emitters, nuclides that decay by K-capture, and alpha emitters are handled with other detection mechanisms. These are usually not tracked individually by sample, but as a composite of many samples over a month or quarter period. The concentrations of the composite nuclides are combined with the concentrations of the individual nuclides determined from gamma analysis for each sample.

For liquid releases, the composite nuclides are generally H-3, Fe-55, Sr-89, Sr-90, and gross alpha. For gaseous releases, Fe-55 is generally not included.

In EMS, these are contained in an editable file designated by the composite ID number. Each release point definition specifies which composite ID is used with the release point. These can be the composite nuclides, or any other nuclides desired.

Composite samples produced by taking portions of the samples from individual releases are analyzed after the releases are over. Since these generally do not vary much from one period to the next, it is common to use the most recent values. However, EMS provides the option of updating the composite values for the proper time period and recalculating the activity and dose values in the database.

The EMS composite update process processes only those nuclides listed in the Composite ID for the release point. For each nuclide, the curies and doses based on the previous value are subtracted from the cumulative totals and the curies and doses based on the correct value are added into the cumulative totals.

For the setting of flags to control options in the EMS code, see the NAESCO Seabrook Station EMS Operator's Manual 07-0589.

CHAPTER 2

LIQUID RELEASE CALCULATIONS

2.1 LIQUID PRE-RELEASE PERMIT

A liquid pre-release permit is generated with a program that uses the nuclide activities to determine the radiation monitor setpoint (for 10CFR20 compliance) and the potential doses for 10CFR50 compliance.

Continuous releases are treated similarly.

2.2 10CFR20 COMPLIANCE

10CFR20 compliance calculations are broken down into two paths. The first path calculates compliance with the old 10CFR20 in which the calculations are based on Maximum Permissible Concentrations. The second path complies with the new 10CFR20 and is Effluent Concentration Limits based.

10CFR20 requires that the sum of concentrations divided by MPC (old 10CFR20) or ECL (new 10CFR20) values must not exceed unity for MPCs or 10 for ECLs:

OLD 10CFR20		NEW 10CFR20
$S = \Sigma_i \; C_i/MPC_i \leq 1$	OR	$S = \Sigma_i \; C_i/ECL_i \leq 10$

for concentrations C_i released from the site. MPC_i is the maximum permissible concentration from the old 10CFR20, Appendix B, Table II, Column 2, for nuclide i and ECL_i is the effluent concentration limit from the new 10CFR20, Appendix B, Table 2, Column 2, for nuclide i.

Pg 44
ODCM rev 22

If the summation is greater than the limit, then dilution is required. The required dilution factor is:

If the 10CFR20 option is OLD:

$$D_{req} = \frac{\sum_i \frac{C_i}{MPC_i}}{f \cdot R_{max}}$$

where

D_{req} = Total required dilution factor

C_i = Concentration of nuclide i in μCi/mL

MPC_i = Maximum permissible concentration of nuclide i in μCi/mL

f = Release point setpoint safety factor (usually equal to 0.5) from the release point definition.

R_{max} = The maximum MPC ratio from the release point setpoint definition.

If the 10CFR20 option is NEW:

$$D_{req,g} = \frac{\sum_{i=g} \frac{C_i}{ECL_i}}{f \cdot R_{max}}$$

$$D_{req,ng} = \frac{\sum_{i=ng} \frac{C_i}{ECL_i}}{f \cdot R_{max}}$$

$$D_{req} = D_{req,g} + Dreq,ng$$

where

$D_{req,g}$ = Required dilution factor for gamma-emitters

$D_{req,ng}$ = Required dilution factor for non-gamma-emitters

ECL_i = Effluent concentration limit of nuclide i in μCi/mL

and the sums extend over gamma-emitters (g) and non-gamma-emitters (ng), respectively.

Any nuclides with $MPC_i \leq 0$ are excluded from the sum.
Any nuclides with $ECL_i \leq 0$ are excluded from the sum.

The available dilution flow is the minimum dilution stream flow that can be ensured for the period of the release, corrected for other releases in process and any activity in the dilution stream, and reduced by a safety factor.

$$F_{avail} = F_{ant} \ (f_f/100) \ (1 - \Sigma \ C_i/XXX_i)$$

where

C_i = Concentration (μCi/ml) for nuclide i for the dilution stream sample

XXX_i = MPC_i or ECL_i

f_f = Flow safety factor, in percent

F_{ant} = Anticipated dilution flow rate for the release

The anticipated dilution factor is then

$$D_{ant} = (F_{waste} + f_{alloc} \ F_{avail}) / F_{waste}$$

where

F_{waste} = waste flow anticipated for this release

F_{avail} = available dilution flow

f_{alloc} = fraction of available dilution stream flow allocated to this release

Pg 46

ODCM Rev 22

Dissolved and Entrained Gases

To implement 10CFR20, it is also required that the total concentration of dissolved and entrained gases in liquid effluents be less than a specified value (normally, 2 E-04 μCi/mL under OLD 10CFR20, or 1 E-04 μCi/mL under NEW 10CFR20). EMS stores this limit in the Activity Limits transaction, checks this limit for each liquid permit, and indicates on the permit approval screen whether or not it is exceeded. To include dissolved noble gases in the D_{req} calculation, the database must also contain the same limiting value, as the liquid MPC or ECL for each noble gas nuclide.

2.3 MAXIMUM WASTE FLOW

The maximum waste flow calculation is based on the setting of the SET_OPT option in the WFLOW_M class of options in the Release Point Setpoint definition. This option can take on four values: NONE, NWAS (no waste), CALC or DOSE. For liquid releases, NONE, NWAS, and CALC are allowed.

For liquid releases,

Wmax = the minimum of R_{wmax} and R_{cwmax}

where

W_{max} = Maximum permissible waste flow rate for this release

R_{wmax} = Release point maximum waste flow rate, as set in the release point definition

If the SET_OPT option = NONE:

R_{cwmax} = waste flow rate for the sample, F_{waste}

If the required dilution factor, D_{req} (section 2.2) for the sample is greater than 1, R_{cwmax} becomes:

$$R_{cwmax} = \frac{F_{avail} \cdot f_{alloc}}{D_{req} - 1.0}$$

If the SET_OPT option = CALC

$$R_{cwmax} = \frac{F_{avail} \cdot f_{alloc} + F_{waste}}{D_{req}}$$

Pg 47

ODCM rev 22

If the SET_OPT option = NWAS

$$R_{cwmax} = \frac{F_{avail} \cdot f_{alloc}}{D_{req}}$$

2.4 MINIMUM DILUTION FLOW RATE

If $D_{req} > 1$, the minimum dilution flow rate is determined as follows:

If the SET_OPT option is NWAS:

$$min_dflow = \frac{F_{waste} \cdot D_{req}}{f_{alloc} \cdot (f_f / 100) \cdot \left[1 - \sum_i \frac{C_i}{XXX_i} \right]}$$

where XXX_i is MPC_i under OLD 10CFR20, and is ECL_i under NEW 10CFR20.

If the SET_OPT option is other than NWAS:

$$min_dflow = \frac{F_{waste} \cdot (D_{req} - 1.0)}{f_{alloc} \cdot (f_f / 100) \cdot \left[1 - \sum_i \frac{C_i}{XXX_i} \right]}$$

Otherwise:

$$min_dflow = 0.0$$

2.5 SETPOINT CALCULATIONS

Setpoints are calculated for individual release points, and for the discharge point that may combine several release points.

A setpoint adjustment factor, S_{adj} is determined from the value of D_{req}.

If $D_{req} > 1$ or the dilution factor option is N, and the setpoint equation is set to STD:

$$S_{adj} = D_{ant} / D_{req}$$

If the dilution factor option is Y, and $0 < D_{req} \leq 1.0$ or if the dilution factor option is Y, and the setpoint equation is set to NO_DIL, then no credit is taken for dilution, and the setpoint adjustment factor is:

$$S_{adj} = 1/D_{req}$$

If neither of these conditions is true, $S_{adj} = 0$.

After the above tests, further tests are made based on the setting of the setpoint equation option, SETP_EQN. These <u>may</u> change S_{adj} as follows:

If the SETP_EQN is set to DILUT, and $F_{waste} > 0$, then:

$$S_{adj} = \frac{F_{ant} + F_{waste}}{F_{waste}}$$

If the SETP_EQN is set to STD, and the SET_OPT option is set to NWAS, and $F_{waste} > 0$, then:

$$S_{adj} = \frac{f_{alloc} \cdot F_{avail}}{F_{waste} \cdot D_{req}}$$

Otherwise, if the SETP_EQN option is set to STD, and the SET_OPT option is set to <u>other than</u> NWAS, and $F_{waste} > 0$, then:

$$S_{adj} = \frac{(f_{alloc} \cdot F_{avail}) + F_{waste}}{F_{waste} \cdot D_{req}}$$

Otherwise, if the SETP_EQN option is set to LOW_ACT, and the SET_OPT option is set to NWAS, and $F_{waste} > 0$, then:

$$S_{adj} = \frac{\dfrac{(f_{alloc} \cdot F_{avail})}{F_{waste}} - D_{req,ng}}{D_{req,g}}$$

Otherwise, if the SETP_EQN option is set to LOW_ACT, and the SET_OPT option is set to other than NWAS, and $F_{waste} > 0$, then:

$$S_{adj} = \frac{\dfrac{(f_{alloc} \cdot F_{avail}) + F_{waste}}{F_{waste}} - D_{req,ng}}{D_{req,g}}$$

Otherwise, S_{adj} is unchanged.

The setpoint adjustment factor is further tested against a limiting value ($S_{adj,lim}$ which is set using the Release Point transaction in Database Maintenance).

If $S_{adj} > S_{adj,lim}$ then $S_{adj} = S_{adj,lim}$

All of this leads to the maximum setpoint value, S_{max}, based on the gamma-emitting radionuclide mix:

$$S_{max}\ (\mu Ci/ml) = S_{adj}\ \Sigma\ C_i$$

where the sum extends over all gamma-emitting nuclides (nuclides of type other than 0) in which their concentrations are greater than 0.

In user units (cpm or other as set in the Flow Monitor Parameters transaction in Database Maintenance), the maximum setpoint is:

$$S_{max}\ (cpm) = S_{adj}(R_{mon} - B) + B$$

where

B = monitor background (cpm)

R_{mon} = monitor response (cpm)

$= \text{offset} + \text{slope} \cdot \Sigma\ C_i + \text{quad} \cdot (\Sigma\ C_i)^2 + B$

where offset, slope, and quad are the coefficients in a quadratic fit to the monitor response to nuclide activity.

EMS provides an option to calculate nuclide specific responses so that R_{mon} is the sum of responses for each nuclide, rather than the sum of the nuclide concentrations, as shown above. In the nuclide-specific case,

$$R_{mon} = \Sigma \, [offset_i + slope_i \cdot C_i + quad_i \cdot (C_i)^2] + B$$

where the sum extends over all nuclides which have response factors stored in the database for the monitor of interest.

Recommended Setpoint

The setpoint recommended for actual use is based on a comparison of the maximum setpoint calculated as above, to setpoints based on expected response time a tolerance factor (to allow for variations in monitor response during release) and to default values determined by the user. The user can restrict which setpoint value is usually reported by what values are used when setting these tolerance factors and default setpoint values.

The default setpoint in user units (e.g. cpm) can be defined with or without background included. If the cunitnopt parameter (defined in the release point and discharge point tables) equals 0, the default value does not include background; and the current background is added to the default value to get the reported default setpoint. Otherwise, the current background is not added to the default value.

Setpoint in μCi/ml

Note: In this version of the software, the reported setpoint is the user units setpoint. The setpoint calculations using the original concentrations (μCi/ml) is still being done by the software and stored in the sampledata table. To get reported setpoints in μCi/ml, the monitor slope should be set to 1.0 in the Release Point transaction of Database Maintenance and the UNITS parameter for the monitor should be set to μCi/ml in the Activity Monitors transaction. If the Isotopic specific response option is turned on for the release point, then this individual nuclide slopes in the Monitor Slopes can be used to map the response from the nuclide to that of a monitor calibration source (e.g. Cs^{137} equivalent response)

A candidate setpoint is calculated based on the expected response:

$$S_{exp} = f_{tol} \Sigma C_i$$

where

f_{tol} = setpoint tolerance factor (can be set for the release point using QBF)

= 2 if not specified by the user

Now compare the S_{exp} value to the default table value S_{def}:

If $S_{exp} < S_{max}$

and if

$S_{exp} < S_{def}$ <u>and</u> $S_{def} \leq S_{max}$

then use S_{def} — Case 1

Otherwise use S_{exp}. — Case 2,5

If $S_{exp} \geq S_{max}$ use S_{max}. — Case 3

If $S_{max} = 0$, use S_{def} — Case 4

Case 4 occurs if no activity is detectable in the sample ($S_{adj} = 0$).

Case 1	Case 2	Case 3	Case 4	Case 5
		S_{exp}----		S_{def}----
S_{max}----	S_{max}----	S_{max}----		S_{max}----
	S_{exp}----			S_{exp}----
S_{def}----	S_{def}----	S_{def}----	S_{def}----	
S_{exp}----				
0 ----	0 ----	0 ----	0 ----	0 ----
Use S_{def}	Use S_{exp}	Use S_{max}	Use S_{def}	Use S_{exp}

Schematic of Liquid Setpoint Cases

<u>Recommended Setpoint in User Units (e.g. cpm)</u>

The candidate setpoint based on expected monitor response is calculated as follows:

$$S_{exp}(cpm) = f_{tol} \bullet (R_{mon} - B) + f_{Btol} \bullet B$$

where

f_{Btol} = background tolerance factor (set using QBF on the releasept table)

If the default setpoint value includes background:

$$B_{rp} = 0$$

If the default setpoint value does not include background:

$$B_{rp} = B$$

where B is the monitor background count rate and B_{rp} is used below.

If S_{exp} (cpm) < S_{max} (cpm)

and if

S_{exp} (cpm) < S_{def} (cpm) + B_{rp} <u>and</u>

S_{def} (cpm) + B_{rp} ≤ S_{max} (cpm)

then use S_{def} (cpm) + B_{rp} Case 1

Otherwise, use S_{exp} (cpm) Case 2, 5

If S_{exp} (cpm) > S_{max} (cpm)

use S_{max} (cpm) Case 3

If S_{max} (cpm) = 0, use S_{def} + B_{rp} Case 4

NOTE: S_{max} is due to concentration only (i.e., excludes background) for Case 4

<u>Setpoint for Discharge Point</u>

For the discharge point, the total MPC/ECL fraction is:

$$\frac{(\Sigma C_i/MPC_i)_o \cdot F_o + (\Sigma C_i/MPC_i) \cdot F}{F_o + F}$$

OR

$$\frac{(\Sigma C_i/ECL_i)_o \cdot F_o + (\Sigma C_i/ECL_i) \cdot F}{F_o + F}$$

where

$(\Sigma\ C_i/MPC_i\ )_o$ = total MPC fraction for existing concurrent releases for this discharge point excluding this additional release.

$\Sigma\ C_i/MPC_i$ = total MPC fraction for the new release

$(\Sigma\ C_i/ECL_i\ )_o$ = total ECL fraction for existing concurrent releases for this discharge point excluding this additional release.

$\Sigma\ C_i/ECL_i$ = total ECL fraction for the new release

F_o = discharge point waste flow excluding new the release point waste flow to be added.

F = projected waste flow for the new release point to be added

The radiation monitor for the discharge point has setpoint equations identical to those presented above for the release points with the following exceptions:

1. The LOW_ACT setpoint equation option is not supported.

2. For the nuclide-specific response, the concentrations are modified as in:

$$C_i^{dp} = C_i\ [F/(F + F_o)]$$

$$R_{dpmon} = [\ \Sigma\ (offset_i + slope_i \bullet C_i^{dp} + quad_i \bullet (C_i^{dp})^2\ ] + R_{dpmon_o}$$

where

C_i^{dp} = the discharge point isotope concentration from this release point

R_{dpmon} = the discharge monitor response in user units

R_{dpmono} = the discharge monitor response before the current release is added including the background

For non-isotope specific response:

$$R_{dpmon} = [\ offset + slope \cdot C^{dp} + quad \cdot (C^{dp})^2\ ] + R_{dpmon_o}$$

where $C^{dp} = [\ \Sigma\ C_i]\ [F/(F+F_o)]$

Setpoints in μCi/sec

Setpoints in units of μCi/sec can be obtained by setting the UNITS parameter for the monitor to "μCi/s" or "μCi/sec" (Case sensitive. 1st 5 characters must match) in the Activity Monitors transaction and setting the monitor slope to 1.0 as in the μCi/ml setpoint calculation. The user units setpoint, as calculated above for the setpoint in μCi/ml units, will be multiplied by the corresponding effluent flow rate (release point or discharge point) for the monitor to get a reported setpoint in μCi/sec.

2.6 DOSE CALCULATIONS FOR LIQUID RELEASES

The EMS software calculates and stores the dose for each receptor, for each nuclide, and for each organ. The dose is the total over all pathways which apply to that receptor. A receptor is defined by receptor ID, age group (infant, child, teen, or adult), sector, and distance from the plant.

The equation used in the liquid permit processing to calculate the dose received by receptor r from a released nuclide i is:

$$D_{i\tau r} = A_{i\tau r}\ \Sigma\ \Delta t_s\ C_{is}\ F_{sr}$$

where:

The sum extends over all time periods.

$D_{i\tau r}$ = the cumulative dose or dose commitment to the total body or an organ τ by nuclide i for receptor r from the liquid effluents for the total time period of the release, in mrem.

$A_{i\tau r}$ = site-related ingestion dose or dose commitment factor for receptor r to the total body or organ τ for radionuclide i, in mrem/hr per μCi/ml. $A_{i\tau r}$ is available as an editable table, but can be recalculated with different parameters and pathways with the Dose Factor Processing (DFP) option. The

equations used are presented in Chapter 4 of this manual.

Δt_s = length of time period s, over which the concentration and F value are averaged, for all liquid releases, in hours.

C_{is} = the average concentration of radionuclide i in undiluted liquid effluent during time period Δt_s from any liquid release, in μCi/ml.

F_{sr} = the near field average dilution factor for receptor r during any liquid effluent release.

$$F_{sr} = \frac{F_w}{\text{Denom}}$$

The value of Denom depends upon several variables and nested if statements. The derivation of the Denom value is shown in the logic and equations shown below.

If the STREAM_FLO option in the OPTIONS Table is set to Y, then

$$Denom = F_{strm} \cdot (U_f / 60) \cdot (1/R_{mix})$$

else (river stream flow is not used)

If the denom_typ option from the Options Table is 1, (dose from a dilution stream) then

$$Denom = (U_f/60) \cdot (1/R_{mix})$$

Else if denom_typ is 2, (dilution flow includes waste flow) then

$$Denom = F_{dil} \cdot (U_f/60) \cdot (1/R_{mix})$$

else (denom_typ is not 1 or 2)

if the QV_OPT option in the OPTIONS table is set to ON, (dilution flow is from the QDVOL table) then

$$Denom = (F_w + F_{qvol}) \cdot (U_f/60) \cdot (1/R_{mix})$$

else (the normal standard calculation)

$$Denom = (F_w + F_{dil}) \cdot (U_f/60) \cdot (1/R_{mix})$$

end of if on QV_OPT option

end of if on denom_typ option

end of if on stream_flo option

If Denom is greater than 0.0 then

If Denom > 1000. and option to limit the denominator is Y, then

Denom = 1000.

end of if denom is too large

end of if denom is greater than 0.0

$$Denom = Denom / (U_f/60)$$

Where:

F_{strm}= River stream flow past the site in user liquid flow rate units. The value used during permit processing is the value obtained from the STATIONDATA table. The value is entered into the STATIONDATA table using the QBF utility. If the value is to be changed often, it would be possible to write a command procedure which get the value from the user and write it into the table.

F_w = flow rate of undiluted waste effluent in user liquid flow rate units.

$U_f/60$ = Flow rate units conversion factor for liquid releases/60. U_f converts from user units to CFM so this factor converts to CFS.

F_{dil} = flow rate of the dilution flow in user liquid flow rate units.

R_{mix} = mixing ratio = fraction of the release that reaches the receptor. Separate mixing ratios are stored for each pathway for each receptor.

A mixing ratio of zero for a pathway receptor indicates that the pathway is not present for the receptor. The first non-zero value is used in the dose calculation.

The different mixing ratios for the pathways are incorporated into the composite A_i factors calculated by the dose factor processing (DFP) program.

F_{qvol} = Flow rate from user entered quarterly dilution flow rate. These values are from the AFLOW column of the QDVOL table for the release.

If stream flow option is being used and the average river stream flow is known at the time the liquid release is processed, then the command procedure which runs the liquid permit processing could be modified to ask for the stream flow value and put it into the stationdata table before the permit is processed. If the average river stream flow is not known at the time the liquid release is processed, then some other provision must be made for correcting the cumulative dose totals in the CUMDOSE table so that it is based on the correct stream flow value. If the average stream flow for

the month is used, then each liquid release point entry in the CUMDOSE table for the month could be multiplied by the ratio of the actual stream flow for the month divided by the default value contained in the STATIONDATA table. Caution: Since there is no record stored in the database of what stream flow value was used to calculate the dose values, the user must verify that no correction is applied more than once to each dose value.

2.7 31 DAY PROJECTED DOSE CALCULATIONS

The 31 Day Projected Dose values appear on the Standard and Special Permit Reports. The Projected Dose values are calculated as follows:

$$D_{p\tau} = (D_\tau \cdot p) + D_{a\tau}$$

where:

$D_{p\tau}$ =the 31 Day Projected Dose by organ τ, by reactor unit

D_τ =the total dose in mrem by organ τ, by reactor unit for the quarter containing the release start date from all closed and open releases when an answer of "Y" is specified for the "Update Totals" field on the release point definition screen.

p =the Projection Factor which is the result of 31 divided by the number of days from start of the quarter containing the release start date to the end of the release. The quarterly and annual projection values on the standard pre-release report use a projection factor with 92 days or 365 days instead of 31 days in the numerator and do not include the additional anticipated dose term.

$D_{a\tau}$ =Additional Anticipated Dose for liquid releases by organ τ and quarter of release by reactor unit.

NOTE: The 31 day dose projections on the Approval/Results screen is the site total for all units.

2.8 POST-RELEASE PROCESSING

After the release is made, actual concentrations are used to check 10CFR20 limits, and the actual dilution flow and waste flow are used instead of the anticipated dilution flow and waste flow.

For batch releases, the duration is determined from the start and end dates and times, and is used with the volume input to calculate the release rate.

Dose calculations are the same as for the pre-release, but with actual release flow rates and release duration.

Setpoint calculations are not performed at the post-release stage.

CHAPTER 3

GASEOUS RELEASE CALCULATIONS

The "annual average X/Q" method is used, in which fixed X/Q and D/Q values are used for each receptor for all dose calculations, regardless of actual wind direction and speed prevailing during a given release. Doses are calculated for each receptor location and age group specified in the Gas Receptors transaction. The controlling individual is the age group and location which receives the maximum organ dose.

3.1 GAS PRE-RELEASE PERMIT

The pre-release permit is produced by a program that uses user-entered estimates of flow rates and release times to calculate doses and activities. The dose rate from the potential release is added to the maximum dose rate occurring for all other releases during the duration of this release for 10CFR20 compliance. The noble gas or air doses and the organ doses are checked against the corresponding limits for 10CFR50 compliance.

3.2 RADIONUCLIDE ACTIVITIES AND COMPOSITE VALUES

The radionuclide results are read from one set of composite activity database records, and from three spectrum analysis result files, and saved in an activity array. If a nuclide appears in more than one spectrum, only the last value read for that nuclide is used. In case of duplication, the one not desired should be edited out of the nuclide list. The samples are read in the following order:

1. Composite Records
2. Particulate File
3. Radioiodine File
4. Noble Gas File

The activity (Q_i) and the activity release rate ($\dot{Q}_i$) are calculated for each nuclide i.

Activity Released

For the plant stack and turbine building vent:

$$Q_i = C_i \cdot V_v \cdot 28316.85 \cdot U_F \cdot 1^{e-6}$$

(μCi) =(μCi/ml) (cubic feet) (ml/cubic feet)

where:

V_v = vent release volume in user units (usually FT^3)

C_i = concentration in μCi/ml

U_F = the flow-rate units conversion factor which converts from user units to CFM

Note: The C_i value also includes the scaled noble gas nuclides for a release (if any exists).

The activity release rate in μCi/sec is

$$\dot{Q}_i = C_i \cdot V_f \cdot 28316.85 \cdot U_F/60$$

For containment purge:

$$\dot{Q}_i = C_i \cdot \text{pump release rate (CFM)} \cdot 28316.85 \cdot U_F/60$$

$$Q_i = \dot{Q}_i \cdot \text{duration of release (min)} \cdot 60$$

3.3 10CFR20 COMPLIANCE

The maximum dose rate during the release is determined by summing together the dose rates for this release, with all concurrent releases in the database for the time of the release.

pg 63
ODCM rev

The database contains all releases for which both pre- and post-release reports have been made (the post-release program enters the data into the cumulative totals). Pre-releases that have not been completed, and which occur during the release under consideration, are also added into the maximum dose rate to account for releases not yet added to the cumulative totals.

The three dose rates (whole body, skin, organ) are compared to the old 10CFR20 limits (old and new 10CFR20 are described below) as defined in the Dose Limits transaction in Database Maintenance.

The dose rate at or beyond the site boundary due to gaseous effluents from the site is limited to:

(a) Release rate limit for noble gases:

$$\Sigma_i K_i \text{ shf } \Sigma_v [\overline{(X/Q)}_{vr} \dot{Q}_{iv}] < 500 \text{ mRem/yr} \cdot f_{alloc} \cdot f_s$$

OR

$$\Sigma_v \text{shf } \Sigma_i [V_{ir} \dot{Q}_{iv}] < 500 \text{ mRem/yr} \cdot f_{alloc} \cdot f_s$$

Elevated Stack ≥ 80m

$$\Sigma_i \text{ shf } (L_i + 1.1M_i) \ \Sigma_v [\overline{(X/Q)}_{vr} \dot{Q}_{iv}] < 3000 \text{ mRem/yr} \cdot f_{alloc} \cdot f_s$$

OR

$$\Sigma_v \text{ shf } \Sigma_i [(L_i \overline{(X/Q)}_{ir} + 1.1B_{ir}) \dot{Q}_{iv}] < 3000 \text{ mRem/yr} \cdot f_{alloc} \cdot f_s$$

Elevated Stack ≥ 80m

where the terms are defined below.

(b) Release rate limit for all radionuclides and radioactive materials in particulate form, with half lives greater than 8 days:

$$\Sigma_i \Sigma_p \Sigma_v [f_p P_{ip} W_{mv} \dot{Q}_i] < 1500 \text{ mRem/yr} \cdot f_{alloc} \cdot f_s$$

where:

Pg 64
ODCM rev 22

i = index over all radionuclides

v = index over all vents or stacks for the unit

p = index over all pathways

r = index for receptor locations

K_i = the total body dose factor due to gamma emissions for noble gas radionuclide i, in mrem/yr per $\mu Ci/m^3$.

L_i = the skin dose factor due to beta emissions for noble gas radionuclide i, in mrem/yr per $\mu Ci/m^3$.

V_{ir} = the elevated plume gamma total body dose factor for nuclide i at receptor location r, in mrem/yr per $\mu Ci/sec$.

M_i = the air dose factor due to gamma emissions for noble gas radionuclide i, in mrad/yr per $\mu Ci/m^3$.

B_{ir} = the elevated plume gamma skin dose factor for nuclide i at receptor location r, in mrad/yr per $\mu Ci/sec$.

1.1 = mrad to mrem conversion factor in mrem/mrad

P_{ip} = the dose factor for the critical organ for nuclides other than noble gases for the inhalation pathway (in units of mrem/yr per $\mu Ci/m^3$) and for ground plane and food pathways (in units of m^2 (mrem/yr per $\mu Ci/sec$)). The most restrictive age group is used.

f_p = factor to select which pathways are included in the calculation. Factor = 1 to include a pathway, 0 to exclude.

W_{mv} = $(\overline{X/Q})_{mv}$ for tritium and the inhalation pathway and = $(D/Q)_{mv}$ for other nuclides and pathways.

$(\overline{X/Q})_{vr}$ = the highest value of the annual average atmospheric dispersion factor at the site boundary, for all sectors, in sec/m^3.

$(\overline{X/Q})_{mv}$ = the highest value of the annual average atmospheric dispersion factor at the distance of the site boundary, for all sectors, in sec/m^3.

$\overline{(D/Q)}_{mv}$ = the highest value of the annual average deposition factor at the distance of the site boundary, for all sectors, in m^{-2}.

$\dot{Q}_{iv}$ = the average release rate of nuclide i in gaseous effluent from release point v, in μCi/sec. Noble gases may be averaged over a period of 1 hour, and any other nuclides may be averaged over a period of 1 week.

500 = site dose rate limit for whole body in mrem/year.

3000 = site dose rate limit for skin in mrem/year

1500 = site dose rate limit for any organ in mrem/year

shf = noble gas dose shielding factor

f_{alloc} = fraction of the dose limit allocated to this release point

f_s = safety factor for the release point

3.4 SETPOINT DETERMINATION

Setpoints are determined from Dose Rate Limits set forth in the Technical Specifications and stored in the Dose Limits Table.

The ratio of dose rate limit to dose rate for a single release point is given below for these three cases:

<u>Noble Gases</u>

nratio = r_g = lesser of the ratios

(total body dose rate limit/total body dose rate) and
(skin dose rate limit/skin dose rate)

= for a vent release, lesser of

$$\frac{500 \text{ mrem/yr}}{\text{shf } \Sigma_i K \cdot \dot{Q}_{iv} \cdot \overline{(X/Q)}_{mv}}$$

Pg 66
ODCM Rev 22

and

$$\frac{3000 \text{ mrem/yr}}{shf \; \Sigma \; (L_i + 1.1M_i) \cdot \dot{Q}_{iv} \cdot \overline{(X/Q)}_{mv}}$$

= for an Elevated Stack ≥ 80m, lesser of

$$\frac{500 \text{ mrem/yr}}{shf \; \Sigma \; V_{ir} \cdot \dot{Q}_i}$$

and

$$\frac{3000 \text{ mrem/yr}}{shf \; \Sigma \; [\; L_i \cdot \overline{(X/Q)}_r + 1.1B_{ir}] \cdot \dot{Q}_i}$$

Radioiodines and Particulates

In these cases, the ratio is obtained by summing over the appropriate nuclide indices:

$$rpratio = \frac{1500 \text{ mrem/yr}}{\Sigma \; P_i \cdot \dot{Q}_{iv} \cdot W_{mv}} = \text{maximum organ dose rate}$$

When the sum is over nuclides and the inhalation, ground plane and cow's milk pathways are all turned on.

3.4a SETPOINTS

Setpoints are determined for radiation monitors on individual release points, and also for radiation monitors at the discharge points that may combine the effluent from several release points.

Calculations for the monitor response are made for noble gases, radioiodines, and particulates.

For a release point, the expected monitor response to a given nuclide concentration is:

$$R_{mon} = \text{monitor response (cpm)} + B$$

$$= \text{offset} + [\text{slope} \cdot \Sigma \; C_i] + [\text{quad} \cdot (\Sigma \; C_i)^2] + B$$

Pg 67
ODCM rev 22

where offset, slope, and quad are the coefficients in a quadratic fit to the monitor response to nuclide activity, and B is the monitor background.

EMS provides an option to calculate nuclide specific responses so that R_{mon} is determined from the response for each nuclide, rather than the sum of the nuclide concentrations, as shown above. In that case,

$$R_{mon} = \Sigma \ (offset_i + [slope_i \bullet C_i] + [quad_i \bullet (C_i)^2]) + B$$

The expected response for discharge points is based on the sum of the expected response for releases already in progress plus the expected response due to release point being considered.

$$R_{dpmon} = R_{dpmon_o} + \Sigma \ [offset_i + slope_i \bullet C_i^{dp} + quad_i \bullet (C_i^{dp})^2]$$

where

$$C_i^{dp} = C_i \bullet (F_{rp} / F_{dp})$$

C_i = concentration for the release point

pg 68
ODCM Rev 22

F_{rp} = flow rate for the release point

F_{dp} = flow rate for the discharge point

R_{dpmon} = discharge point monitor response for the release in progress

R_{dpmon_o} = the discharge monitor response before the current release is added including the background

and $offset_i$, $slope_i$ and $quad_i$ are the quadratic response coefficients of the discharge point monitor.

Non-isotope specific response:

$$R_{mon}^{dp} = offset + slope \cdot (\Sigma C_i^{dp}) + quad \cdot (\Sigma C_i^{dp})^2 + R_{dpmon_o}$$

All other equations are the same as for the individual release point, but use the discharge point monitor response and the discharge point allocation factor and safety factors.

EMS allows for setpoint calculations based on the standard or response method. Thus, each release point will have associated with it, a setpoint equation: STD or RESP. This can be set in the Release Point (Setpoint) transaction of Database Maintenance.

<u>If the release point setpoint equation = STD</u> :

The limiting setpoint for the monitor (in μCi/ml) is given by:

$$S_{max} = f_s \cdot f_{alloc} \cdot ratio \cdot SUM$$

The limiting setpoint for the monitor (in user units, e.g., cpm) is given by:

$$SU_{max} = f_s \cdot f_{alloc} \cdot ratio \cdot (R_{mon} - B) + B$$

Pg 69
ODCM rev 22

where

offset = 1. noble gas offset factor
2. radioiodine offset factor
3. particulate offset factor

slope = 1. noble gas slope factor
2. radioiodine slope factor
3. particulate slope factor

quad = 1. noble gas quadratic factor
2. radioiodine quadratic factor
3. particulate quadratic factor

f_s = safety factor for the release point

f_{alloc} = dose rate allocation factor for the release point

ratio = 1. nratio for noble gases
2. rpratio for radioiodines
3. rpratio for particulates

SUM = 1. Σ noble gas concentrations, for noble gases
2. Σ radioiodine concentrations, for radioiodines
3. Σ particulate concentrations, for particulates

R_{mon} = 1. noble gas monitor response
2. radioiodine monitor response
3. particulate monitor response

B = 1. observed background response for the noble gas monitor
2. observed background response for the radioiodine monitor
3. observed background response for the particulate monitor

NOTE :Separate calculations are made for noble gases, radioiodine, and particulates

The limiting setpoint for gaseous releases is determined separately for noble gases, radioiodines, and particulates for each release point and discharge point.

pg 70
ODCM Rev 2

If the release point setpoint equation = RESP :

The reported setpoint for the monitor (in μCi/ml) now becomes:

$$S_{max} = [mrtol \cdot (SUM - B)] + (mrtolb \cdot B)$$

The limiting setpoint for the monitor (in user units, e.g., cpm) now becomes:

$$SU_{max} = [mrtol \cdot (Rmon - B)] + (mrtolb \cdot B)$$

where

mrtol = 1. monitor response tolerance factor (noble gas)
2. monitor response tolerance factor (radioiodine)
3. monitor response tolerance factor (particulate)

SUM = as defined above

B = as defined above

mrtolb = 1. monitor tolerance background factor (noble gas)
2. monitor tolerance background factor (radioiodine)
3. monitor tolerance background factor (particulate)

R_{mon} = as defined above

3.4b REPORTED SETPOINTS

The setpoint reported on the pre-release reports are in user defined units. If the release point setpoint equation is STD, then the maximum setpoint is compared with the response and default setpoints.

NOTE : The response setpoint as defined in this section is not necessarily the same as the maximum setpoint based on the RESP setpoint equation, as defined in the previous section. $S_{response}$ is defined below.

The reported setpoint is as follows:

1. Reported = $S_{response}$
   if $S_{response} < S_{max} < S_{default}$
   OR
   if $S_{default} < S_{response} < S_{max}$

2. Reported = S_{max}
   if $S_{response} \geq S_{max}$

3. Reported = $S_{default}$
   if $S_{response} < S_{default} < S_{max}$

where

S_{max} = as defined in the previous section

$$S_{response} = \begin{cases} \text{mrtol} \cdot \text{SUM} & [\mu\text{Ci/ml}] \\ [\text{mrtol} \cdot (\text{Rmon} - \text{B})] + (\text{mrtolb} \cdot \text{B}) & [\text{User Units}] \end{cases}$$

$S_{default}$ = normal setpoint defined for the release point in units of [μCi/ml] and [User Units].

NOTE : Separate checks are made for each setpoint in [μCi/ml] and [User Units] for the noble gas, radioiodine, and particulate monitors.

Setpoints in μCi/sec

Setpoints in units of μCi/sec can be obtained by setting the UNITS parameter for the monitor to "μCi/s" or "μCi/sec" (Case sensitive. 1st 5 characters must match) in the Activity Monitors transaction and setting the monitor slope to 1.0 as in the μCi/ml setpoint calculation. The user units setpoint, as calculated above for the setpoint in μCi/ml units, will be multiplied by the corresponding effluent flow rate (release point or discharge point) for the monitor to get a reported setpoint in μCi/sec.

3.5 MAXIMUM WASTE FLOW

The maximum waste flow calculation is based on what the WFLOW_M option (release point setpoint calculation option) is set to. This option can take on one of three values: NONE, DOSE, and CALC. Gaseous release point setpoint WFLOW_M can be set to either NONE or DOSE.

For gaseous releases,

$$Wmax = \text{the minimum of } R_{wmax} \text{ and } R_{cwmax}$$

where

R_{wmax} = Release point maximum waste flow rate as stored in the release point definition

If WFLOW_M option = NONE

R_{cwmax} = waste flow rate for the sample, V_f

If WFLOW_M option = DOSE

$$R_{cwmax} = \frac{f_s \cdot nratio \cdot V_f}{F_{wsfac}}$$

where

f_s = Safety factor for the release point

nratio = nratio as described in section 3.4

V_f = Waste flow rate for the release (sample)

F_{wsfac} = Waste flow rate DOSE setpoint safety factor

3.6 DOSE RATE AND CUMULATIVE DOSE CALCULATIONS

<u>Noble Gas Dose and Dose Rate Calculations</u>

The dose rate and dose contribution due to noble gases in gaseous effluents are calculated using the following expressions:

pg 73
ODCM rev22

For Noble Gas Air Dose due to gamma radiation (for vents or stacks < 80 meters):

$$D_\gamma = (3.17 \cdot 10^{-8}) \cdot X/Q_g \cdot t^{-a} \cdot f_o \cdot \Sigma M_i \cdot Q_{iv}$$

For Noble Gas Air Dose due to beta radiation (for vents or stacks < 80 meters):

$$D_\beta = (3.17 \cdot 10^{-8}) \cdot X/Q \cdot t^{-b} \cdot f_o \cdot \Sigma N_i \cdot Q_{iv}$$

For Noble Gas Total Body Dose Rate (for vents or stacks < 80 meters):

$$D_t = shf \cdot X/Q_g \cdot 8760^{-a} \cdot f_o \cdot \Sigma (K_i \cdot QR_{iv})$$

For Noble Gas Total Body Dose (for vents or stacks < 80 meters):

$$D_{tb} = \frac{shf \cdot f_o \cdot \Sigma (K_i \cdot QR_{iv}) \cdot X/Q_g \cdot t^{-a}}{(5.256 \cdot 10^5 / dur)}$$

For Noble Gas Skin Dose Rate (for vents or stacks < 80 meters):

$$D_s = shf \cdot f_o \cdot \Sigma QR_{iv} \cdot [(L_i \cdot X/Q \cdot 8760^{-b}) + (1.11M_i \cdot X/Q_g \cdot 8760^{-a})]$$

For Noble Gas Skin Dose (for vents or stacks < 80 meters):

$$D_{sk} = \frac{shf \cdot f_o \cdot \Sigma QR_{iv} \cdot [(L_i \cdot X/Q \cdot t^{-b}) + (1.11M_i \cdot X/Q_g \cdot t^{-a})]}{(5.256 \cdot 10^5 / dur)}$$

where

D_β = total beta air dose from gaseous effluents (mrad)

D_γ = total gamma air dose from gaseous effluents (mrad)

D_t = the total body dose rate due to gamma emissions by noble gas releases from vent v (mrem/yr)

D_{tb} = total body dose from gaseous effluents (mrem)

D_s = skin dose rate from gaseous effluents (mrem/yr)

D_{sk} = skin dose from gaseous effluents (mrem)

1.11 = conversion factor from mrad to mrem

$3.17 \cdot 10^{-8}$ = inverse of number of seconds in a year

$5.256 \cdot 10^{5}$ = number of minutes in a year

8760^{-a} = adjustment factor used to convert the 1-hour X/Q value to an average 1 year X/Q value (dimensionless)

8760 = number of hours in a year

a = "a" factor for gamma noble gas X/Q

b = "a" factor for noble gas X/Q

t^{-a} = adjustment factor to convert the 1-hour X/Q value to the short term X/Q value for the release (dimensionless)

t = duration of release (hours)

dur = duration of the release (minutes)

f_o = occupancy factor defined for the receptor at the given location (dimensionless)

K_i = total body dose factor due to gamma emissions for noble gas radionuclide i (mrem/yr per $\mu Ci/m^3$)

L_i = skin dose factor due to beta emissions for noble gas radionuclide i (mrem/yr per $\mu Ci/m^3$)

M_i = air dose factor due to gamma emissions for noble gas radionuclide i (mrad/yr per $\mu Ci/m^3$)

N_i = air dose factor due to beta emissions for noble gas radionuclide i (mrad/yr per $\mu Ci/m^3$)

$3.17 \cdot 10^{-8}$ = inverse of number of seconds in a year

Q_{iv} = release of noble gas radionuclides, i, in gaseous effluents from vent or stack v (μCi)

QR_{iv} = release rate of noble gas radionuclides, i, in gaseous effluents from vent or stack v (μCi/sec).

shf = shielding factor (dimensionless)

X/Q = highest value of the noble gas 1-hour X/Q for vent or stack v at the site boundary (sec/m^3)

X/Q_g = highest value of the noble gas 1-hour X/Q for gamma radiation for vent or stack v at the site boundary, (sec/m^3)

Organ Dose Calculations

For Critical Organ Dose Rate--Inhalation Pathway and all Pathways for H-3, C-14 (for vents or stacks < 80 meters):

$$DR_{\tau a} = X/Q_r \cdot 8760^{-c} \cdot \Sigma P_{ip\tau a} \cdot QR_{iv}$$

For Critical Organ Dose Rate--Ground and Food Pathways (for vents or stacks < 80 meters):

$$DR_{\tau a} = D/Q \cdot 8760^{-d} \cdot \Sigma R_{ip\tau a} \cdot QR_{iv}$$

For Critical Organ Dose-Inhalation Pathway and all Pathways for H-3, C-14 (for vents or stacks < 80 meters):

$$D_{\tau a} = (3.17 \cdot 10^{-8}) \cdot X/Q_r \cdot t^{-c} \cdot f_o \cdot \Sigma P_{ip\tau a} \cdot Q_{iv}$$

For Critical Organ Dose-Ground and Food Pathways (for vents or stacks < 80 meters):

$$D_{\tau a} = (3.17 \cdot 10^{-8}) \cdot D/Q \cdot t^{-d} \cdot f_o \cdot \Sigma R_{ip\tau a} \cdot Q_{iv}$$

where

$DR_{\tau a}$ = dose rate for age group a and organ τ from iodines and particulates with half lives greater than 8 days in gaseous effluents (mrem/yr)

$D_{\tau a}$ = dose for age group a and organ τ from iodines and particulates with half lives greater than 8 days in gaseous effluents (mrem)

c = "a" factor for Radioiodine/Particulate X/Q

d = "a" factor for D/Q

D/Q = highest value of the 1-hour deposition factor at the distance of the site boundary ($1/m^2$)

$P_{ip\tau a}$ = dose factor for each radionuclide i, pathway p, organ τ, and age group a (mrem/yr per μCi/m^3)

$R_{ip\tau a}$ = dose factor for each radionuclide i, pathway p, organ τ, and age group a (m^2 • mrem/yr per μCi/sec)

Pg 76
ODCM Rev 2

X/Q_r = highest value of the radioiodine/particulate 1-hour X/Q for vent or stack v at the site boundary (sec/m^3)

Note: It is assumed P_{ipra} will not contain long term X/Q or D/Q values.

The maximum exposed individual is determined by the maximum dose received by any organ. The summation extends over all applicable nuclides and pathways.

3.7 RESOLVING DOUBLE-COUNTING OF DOSE AND ACTIVITY

Gaseous release points fall into three categories for double-counting of dose and activity. One, a release point will not have activity sampled twice. Two, a release point can have activity that is sampled again downstream and would be double-counted if no corrections were applied. Three, a release point can have samples containing activity already sampled once upstream which would be double-counted if no corrections were applied. The last two categories can be called the "CAUSE" release point and the "EFFECT" release point, respectively.

To avoid double-counting dose and activity, only the "EFFECT" release point will have its activity and concentrations corrected as follows. Corrected activity is calculated as follows:

$$A_{cei} = A_{ei} - A_{ci}$$

where:

A_{cei} =the corrected "EFFECT" release point activity for nuclide i which defaults to zero if its value is less than zero.

A_{ei} =the initial "EFFECT" release point activity for nuclide i

A_{ci} =the "CAUSE" release point activity for nuclide i

Corrected concentrations are calculated as follows:

$$C_{cei} = (A_{cei} / V_e) \cdot 35.315$$

pg 77
ODCM rev22

where:

C_{cei} =the corrected "EFFECT" release point concentrations for nuclide i

V_e = the waste volume for the "EFFECT" release point

35.315 =conversion factor from Ci/ft^3 to $\mu Ci/ml$ ($Ci/ft^3 \cdot ft^3/1728\ in^3 \cdot in^3/16.387\ cm^3$)

3.8 31 DAY PROJECTED DOSE CALCULATIONS

The 31 Day Projected Dose values appear on the Standard and Special Permit Reports. The Projected Dose values are calculated as follows:

$$D_{p\tau} = (D_\tau \cdot p) + D_{a\tau}$$

where:

$D_{p\tau}$ =the 31 Day Projected Dose by organ τ, by reactor unit

D_τ =the total dose in mrem by organ τ, by reactor unit for the quarter containing the release start date from all closed and open releases when an answer of "Y" is specified for the "Update Totals" field on the release point definition screen.

p =the Projection Factor which is the result of 31 divided by the number of days from the start of the quarter to the end of the release. The quarterly and annual projection values on the standard pre-release report use a projection factor with 92 days or 365 days instead of 31 days in the numerator and do not include the additional anticipated dose term.

$D_{a\tau}$ =Additional Anticipated Dose for gaseous releases by organ τ and quarter of release, by reactor unit.

NOTE: The 31 day dose projections on the Approval/Results screen is the site total for all units.

3.9 GAS POST-RELEASE PROCESSING

After a pre-release permit has been approved, the post-release program is run to:

- Enter actual release start and stop times, flow rates, etc.
- Check 10CFR20 limits
- Check 10CFR50 limits
- Add the dose and activity data into the cumulative totals.

Compliance with 10CFR20 limits is checked in the same way as described for the pre-release program.

Dose rates are calculated and compared to 10CFR20 limits. Monitor setpoints are not calculated at the post release stage.

CHAPTER 4

LIQUID DOSE FACTOR EQUATIONS

The DFP option is used to calculate the liquid dose factors described previously. Dose factors are calculated separately for each nuclide, organ, and age group. The age group, applied to a specific receptor's dose calculations, is part of the receptor specification.

For a particular receptor, the total dose factor ($A_{i\tau r}$) is a sum over each pathway p with its specific mixing ratio:

$$A_{i\tau r} = \frac{1}{R_{mix,r}} \Sigma R_{mix,r,p} A_{i\tau,r,p}$$

where

$A_{i\tau,r,p}$ = the dose factor for nuclide i, organ τ, receptor age group r, and pathway p

$R_{mix,r,p}$ = mixing ratio for the pathway

$R_{mix,r}$ = mixing ratio for the receptor, which is the first non-zero value of $R_{mix,r,p}$ encountered during the calculation

The user specifies which pathways are included by setting the mixing ratios for the pathways desired to the correct non-zero value. If the receptor mixing ratio for a given pathway is zero, that term is not included in the sum.

The DFP option of EMS uses a more expanded form for liquid dose factors than is given in NUREG-0133. These equations are taken from R.G. 1.109, and account for nuclide decay as well as shoreline doses. If desired, parameters may be selected to reduce the calculations to match NUREG-0133 exactly.

Four different forms of equations are used for the dose factors.

4.1 POTABLE WATER

The dose factor for potable water is:

$$A_{i\tau,r,p} = k_o \cdot (U_{r,p} / dw) \cdot N_i \cdot DF_{i\tau,r} \cdot e(-\lambda_i t_p)$$

where

$A_{i\tau,r,p}$ = dose parameter for organ τ, for the receptor age group r, for nuclide i, due to exposure pathway p, in mrem/hr per μCi/ml

k_o = units conversion factor, = 1.142E5 = 1E6(pCi/μCi) • 1000 (ml/Kg)/ 8760 hr/yr

$U_{r,p}$ = usage factor for pathway p and age group r

dw = additional dilution factor for potable water

N_i = fraction of the radionuclide activity released to the water discharge path that reaches a specific receptor.

$DF_{i\tau,r}$ = ingestion dose conversion factor for nuclide i for receptor age group r in organ τ, in mrem/pCi (Tables E-7 to E-11 of R.G. 1.109)

λ_i = decay constant for nuclide i

t_p = average transit time in seconds

4.2 AQUATIC FOODS PATHWAYS

The liquid dose factor is

$$A_{i\tau,r,p} = k_o \cdot U_{r,p} \cdot BF_{i,p} \cdot N_i \cdot DF_{i\tau,r} \cdot \exp(-\lambda_i t_p)$$

pg 81
ODCM Rev 22

where

$BF_{i,p}$ = bioaccumulation factor for pathway p and nuclide i (from Reg. Guide 1.109, Table A-1). Other variables are as defined on the previous page.

4.3 SHORELINE RECREATION PATHWAY

The pathway-specific dose factors for shoreline deposition are given by:

$$A_{i\tau,r,p} = k_s \, W_s \, N_i \, U_{f,r,p} \, \frac{1 - e^{-\lambda_i t_b}}{\lambda_i} \, e^{-\lambda_i t_{sd}} \, DFG_{i\tau}$$

where

W_s = shoreline width factor

k_s = conversion factor = $k_o \cdot k_c \cdot mtv/3600$

- k_c = water to sediment transfer coefficient in L/kg hr
- mtv = Mass density of sediment in kg/m^2, 40 kg/m^2
- 3600 = Seconds per hour units conversion factor

t_b = length of time sediment is exposed to contaminated water, 4.716E8 sec

t_{sd} = transit time to deposit activity on shoreline

$DFG_{i\tau}$ = the dose conversion factor for standing on ground contaminated with nuclide i, in mrem/hr per pCi/m^2

pg 82
ODCM rev 2

4.4 IRRIGATED VEGETABLE PATHWAY

$$A_{i\tau,r,p} = 1.14 \cdot 10^5 \cdot U_{f,r,p} CF_{iv} \cdot DF_{i\tau,r}$$

where:

$1.14 \cdot 10^5$ = a units conversion factor

CF_{iv} = the concentration factor for radionuclide i in irrigated vegetables, as applicable to the vicinity of the plant site (pCi/kg)/(pCi/L).

Calculation of the Concentration Factor

The calculation of the concentration factor for radionuclide i in irrigated vegetables, CF_{iv} as used in the equation for $A_{i\tau}$, is calculated as follows for all radionuclides other than Tritium:

$$CF_{iv} = N_i \cdot M \cdot I \left[\frac{r\,(1 - e^{-\lambda_{Ei} t_e})}{Y_v \lambda_{Ei}} + \frac{f_I B_{iv} (1 - e^{-\lambda_i t_b})}{P\,\lambda_i} \right] e^{-\lambda_i t}$$

For Tritium, the equation is as follows:

$$CF_{iv} = N_i \cdot M \cdot L_v$$

where

M = the additional dilution factor from the near field of the discharge structure to the point of irrigation water usage.

I = the average irrigation rate during the growing season (L/m^2h).

r = the fraction of irrigation-deposited activity retained on the edible portions of leafy vegetables. There are separate values available for radioiodines and particulates.

Y_v = the agricultural productivity of irrigated leafy vegetables (kg/m^2).

f_I = the fraction of the year that vegetables are irrigated.

B_{iv} = the crop to soil concentration factor applicable to radionuclide i (pCi/kg vegetables)/(pCi/kg soil).

P = the effective surface density of soil (kg/m^2).

λ_i = the decay constant for radionuclide i (h^{-1}).

λ_{Ei} = the effective removal rate for activity deposited on crop leaves (h^{-1}), calculated as $\lambda_{Ei} = \lambda_i + \lambda_w$

λ_w = the rate constant for removal of activity from plant leaves by weathering (h^{-1}).

t_e = the period of leafy vegetable exposure during the growing season (h).

t_b = the period of long-term buildup of activity in soil (h).

t_h = the time between harvest of vegetable and human consumption (h).

L_v = the water content of leafy vegetable edible parts (L/kg).

4.5 REDUCTION TO NUREG-0133 EQUATIONS

NUREG-0133 does not have shoreline deposit equations, which can be eliminated by setting the Water Recreation Mixing Ratio to zero in the Liquid Receptor Transaction definition under EMS.

For the other equations, reduction to NUREG-0133 is obtained by setting:

N_i = 1 (this can be set in the definition of Fraction of Activity Reaching Receptor in DFP)

average transit time t_p = 0 (this can be set in the definition of Dose Calculation Parameters in DFP)

CHAPTER 5

GAS DOSE FACTOR CALCULATIONS

The DFP option is used to calculate the gas dose factors described previously. Dose factors are calculated separately for each nuclide, organ, and age group. The age group, applied to a specific receptor's dose calculations, is part of the receptor specification.

The same gas dose factors are used for both the site boundary dose rate calculations and for the maximum individual controlling location dose calculation.

The dose factor for each particulate or iodine nuclide i (or tritium) is given below. It is a function of pathway, organ, and age group. The pathways considered are:

1. Inhalation
2. Ground
3. Milk (Cow or Goat)
4. Meat
5. Vegetable

5.1 INHALATION PATHWAY

$$P_{i\tau a} = K'(BR)_a \ (DFA_{i\tau})_a \ (\text{mrem/yr per } \mu\text{Ci/m}^3)$$

$$K' = 1E6 \ \text{pCi}/\mu\text{Ci}$$

Pg 85
ODCM rev 22

$(BR)_a$ = breathing rate for age group a, in cubic m/yr

$(DFA_{i\tau})_a$ = inhalation dose factor for organ τ, for age group a, for nuclide i, in mrem/pCi

5.2 GROUND PLANE PATHWAY

$$R_{i\tau a} = K'K''(SF)\ DFG_{i\tau}\ [(1 - e^{-\lambda_i t})/\lambda_i]$$

(m^2 -mrem/yr per μCi/sec)

where

K' = 1E6 pCi/μCi

K'' = 8760 hr/yr

λ_i = decay constant for nuclide i, in sec^{-1}

t = exposure time (sec) = 4.73E8 (15 years)

$DFG_{i\tau}$ = ground plane conversion factor for nuclide i, organ τ (The same $DFG_{i\tau}$ factors apply to all age groups. The factors labelled total body in the database are applied to all other organs)

SF = shielding factor

5.3 MILK PATHWAY

$$R_{i\tau a} = K'\ (DFL_{i\tau})_a\ e^{-\lambda_i t_f}\ Q_F\ F_{mi}\ U_{ap} \cdot$$

$$\left\{ f_p f_s \left[\frac{r\ (1-e^{-(\lambda_i+\lambda_w)t_e})}{Y_p\ (\lambda_i + \lambda_w)} + B_{iv} \frac{(1 - e^{-\lambda_i t_b})}{p\ \lambda_i} \right] \right.$$

PG 8c6
ODCM rev 22

$$+ (1-f_p f_s) e^{-\lambda_i t_h} \left[\frac{r\ (1-e^{-(\lambda_i + \lambda_w) t_e})}{Y_s\ (\lambda_i + \lambda_w)} + B_{iv} \frac{(1 - e^{-\lambda_i t_b})}{p\ \lambda_i} \right] \Bigg]$$

(m^2 - mrem/yr per μCi/sec)

where

K' = 1E6 pCi/μCi

Q_F = feed consumption rate by the milk animal (cow or goat) (Kg/day)

U_{ap} = age group a milk consumption (cow or goat)

Y_p = agricultural productivity by unit area of pasture feed grass, in Kg/sq. m

Y_s = agricultural productivity by unit area of stored feed, in Kg/sq. m

F_{mi} = stable element transfer coefficient for nuclide i, from feed to milk, in days/liter

B_{iv} = factor for uptake of radionuclides from soil by crops

r = fraction of deposited activity retained on animal feed grass (cow or milk). Separate values are used for radioiodines than all other particulates.

$(DFL_{i\tau})_a$ = ingestion dose factor for organ τ, for nuclide i, for receptor in age group a, in mrem/pCi

λ_i = decay constant for nuclide i

λ_w = decay constant for removal of activity on leaf and plant surfaces by weathering, in sec^{-1}

t_f = transport time from pasture to cow or goat to milk to receptor, in sec.

t_h = transport time from pasture to harvest to cow or goat to milk to receptor, in sec.

t_e = seasonal crop exposure time, in sec.

f_p = fraction of year that animal is on pasture

f_s = fraction of animal feed that is pasture grass while animal is on pasture

Carbon-14 in Milk

$$R_{i\tau a} = K'K''' F_{mi} Q_F U_{ap} (DFL_{i\tau})_a p_c (0.11/0.16) e^{-\lambda_i t_f}$$

(m^2-mrem/yr per μCi/sec)

where

$K''' = 1E3$ gm/Kg

p_c = fractional equilibrium ratio

0.11 = fraction of total plant mass that is natural carbon

0.16 = concentration of natural carbon in the atmosphere (g/m3)

and all other parameters as defined above

Only Q_F and U_{ap} depend on cow or goat.

Tritium in Milk

$$R_{i\tau a} = K'K''' F_{mi} Q_F U_{ap} (DFL_{i\tau})_a \cdot (0.75) (0.5/H) e^{-\lambda_i t_f}$$

(m^2-mrem/yr per μCi/sec)

where

$K''' = 1E3$ gm/Kg

H = absolute humidity, gm/cubic meter

0.75 = fraction of total feed that is water

0.5 = ratio of specific activity of feed grass water to the atmospheric water

and all other parameters as defined above

Only Q_F and U_{ap} depend on cow or goat.

5.4 MEAT PATHWAY

$$R_{i\tau a} = K' \ (DFL_{i\tau})_a \ e^{-\lambda_i t_f} \ Q_F \ F_{fi} \ U_{ap} \cdot$$

$$\left\{ f_p f_s \left[\frac{r \ (1-e^{-(\lambda_i+\lambda_w)t_e})}{Y_p \ (\lambda_i + \lambda_w)} + B_{iv} \frac{1-e^{-\lambda_i t_b}}{p \ \lambda_i} \right] \right.$$

$$\left. + \ (1-f_p f_s) e^{-\lambda_i t_h} \left[\frac{r \ (1-e^{-(\lambda_i+\lambda_w)t_e})}{Y_s \ (\lambda_i + \lambda_w)} + B_{iv} \frac{1-e^{-\lambda_i t_b}}{p \ \lambda_i} \right] \right\}$$

where

F_{fi} = stable element transfer coefficient for nuclide i, from feed to meat, in days/Kg

U_{ap} = receptor's meat consumption (Kg/yr)

t_h = transport time from crop field to receptor, in sec

t_f = transport time from pasture to receptor, in sec

and all other factors are as described for the cow-milk pathway

<u>Carbon-14 in Meat</u>

$$R_{i\tau a} = K'K''' \ F_{fi} \ Q_F \ U_{ap} \ (DFL_{i\tau})_a \ P_C \ (0.11/0.16) \ e^{-\lambda_i t_f}$$

(m^2-mrem/yr per μCi/sec)

where all terms are as defined above.

pg 89

ODCM REV 22

Tritium in Meat

$$R_{i\tau a} = K'K''' \; F_{fi} \; Q_F \; U_{ap} \; (DFL_{i\tau})_a \cdot (0.75) \; (0.5/H) \; e^{-\lambda_i t_f}$$

$(m^2\text{-mrem/yr per } \mu Ci/sec)$

where all terms are as defined above.

5.5 VEGETABLE PATHWAY

$$R_{i\tau a} = K' \; (DFL_{i\tau})_a \left\{ U_a^L \; f_L \; e^{-\lambda_i t_L} \cdot \left[\frac{r \; (1-e^{-(\lambda_i+\lambda_w)t_e})}{Y_v \; (\lambda_i + \lambda_w)} + \frac{B_{iv} \; (1-e^{-\lambda_i t_b})}{p \; \lambda_i} \right] \right.$$

$$\left. + U_a^S \; f_g \; e^{-\lambda_i t_s} \cdot \left[\frac{r \; (1-e^{-(\lambda_i+\lambda_w)t_e})}{Y_{sv} \; (\lambda_i + \lambda_w)} + \frac{B_{iv} \; (1-e^{-\lambda_i t_b})}{p \; \lambda_i} \right] \right\}$$

$(m^2\text{mrem/yr per } \mu Ci/sec)$

where

U_a^L = consumption rate of fresh leafy vegetation for age group a, in Kg/yr

U_a^S = consumption rate of stored vegetation for age group a, in Kg/yr

f_L = fraction of annual intake of leafy vegetation grown locally

f_g = fraction of annual intake of stored vegetation grown locally

pg 90
ODCM rev 22

t_L = average time between harvest of leafy vegetation and consumption, in sec.

t_s = average time between harvest of stored vegetation and consumption, in sec.

t_b = long term sediment exposure time, in sec.

t_e = seasonal crop exposure time, in sec.

Y_v = vegetation areal density, in Kg/m^2

Y_{sv} = stored vegetation areal density, in KG/m^2

p = effective soil surface density

B_{iv} = soil to vegetation transfer factor for nuclide i

All other factors are as defined above.

Carbon-14 in Vegetables

$$R_{i\tau a} = K'K''' \ (U_a^L + U_a^S) \ (DFL_{i\tau})_a \ P_c \ (0.11/0.16) \ e^{-\lambda_i t_f}$$

(m^2-mrem/yr per μCi/sec)

where all variables are as defined earlier.

Tritium in Vegetables

$$R_{i\tau a} = K'K''' \ (U_a^L + U_a^S) \ (DFL_{i\tau})_a \cdot (0.75) \ (0.5/H) \ e^{-\lambda_i t_f}$$

(m^2-mrem/yr per μCi/sec)

where all variables are as defined earlier.

5.6 REDUCTION TO NUREG-0133 EQUATIONS

Inhalation and ground plane pathways are the same in R.G. 1.109 and NUREG-0133. For the other pathways (milk, meat, and vegetable), these equations reduce to the NUREG-0133 values by setting:

$t_b = 0$

pg 91
ODCM Rev 22

t_e = 9.999E19

t_f = 0 (in tritium equations only)

There are no C-14 equations in NUREG-0133, which can be obtained by setting p_c = 0.

pg 92
ODCM rev 22

APPENDIX A

REFERENCES

1. Boegli, J.S., R.R. Bellamy, W.L. Britz, and R.L. Waterfield, "Preparation of Radiological Effluent Technical Specifications for Nuclear Power Plants, "NUREG-0133" (October 1978).

2. Calculation of Annual Doses to Man from Routine Releases of Reactor Effluents for the Purpose of Evaluating Compliance with 10CFR Part 50, Appendix I, U.S. NRC Regulatory Guide 1.109, Rev. 1 (October 1977).

REFERENCES

A. Regulatory Guide 1.109, "Calculation of Annual Doses to Man From Routine Releases of Reactor Effluents for the Purpose of Evaluating Compliance with 10CFR50, Appendix I", U.S. Nuclear Regulatory Commission, Revision 1, October 1977.

B. Hamawi, J. N., "AEOLUS-2 - A Computer Code for the Determination of Continuous and Intermittent-Release Atmospheric Dispersion and Deposition of Nuclear Power Plant Effluents in Open-Terrain Sites, Coastal Sites, and Deep-River Valleys for Assessment of Ensuing Doses and Finite-Cloud Gamma Radiation Exposures," Entech Engineering, Inc., March 1988.

C. Regulatory Guide 1.111, "Methods for Estimating Atmospheric Transport and Dispersion of Gaseous Effluents in Routine Releases From Light-Water Cooled Reactors", U.S. Nuclear Regulatory Commission, March 1976.

D. National Bureau of Standards, "Maximum Permissible Body Burdens and Maximum Permissible Concentrations of Radionuclides in Air and in Water for Occupational Exposure", Handbook 69, June 5, 1959.

E. Slade, D. H., "Meteorology and Atomic Energy - 1968", USAEC, July 1968.

F. Seabrook Station Technical Specifications.

Enclosure 6

Technical Specifications

FPL ENERGY SEABROOK, LLC, ET AL.*

DOCKET NO. 50-443

SEABROOK STATION, UNIT NO. 1

FACILITY OPERATING LICENSE

License No. NPF-86

1. The Nuclear Regulatory Commission (the Commission) has found that:

   A. The application for a license complies with the standards and requirements of the Atomic Energy Act of 1954, as amended (the Act), and the Commission's regulations set forth in 10 CFR Chapter I; and all required notifications to other agencies or bodies have been duly made;

   B. Construction of the Seabrook Station, Unit No. 1 (the facility) has been substantially completed in conformity with Construction Permit No. CPPR-135 and the application, as amended, the provisions of the Act, and the regulations of the Commission;

   C. The facility will operate in conformity with the application, as amended, the provisions of the Act, and the regulations of the Commission (except as exempted from compliance in Section 2.D below);

   D. There is reasonable assurance: (i) that the activities authorized by this operating license can be conducted without endangering the health and safety of the public, and (ii) that such activities will be conducted in compliance with the Commission's regulations set forth in 10 CFR Chapter I (except as exempted from compliance in Section 2.D below);

   E. FPL Energy Seabrook, LLC, is technically qualified to engage in the activities authorized by this license in accordance with the Commission's regulations set forth in 10 CFR Chapter I;

   F. The licensees have satisfied the applicable provisions of 10 CFR 140, "Financial Protection Requirements and Indemnity Agreements," of the Commission's regulations;

---

*FPL Energy Seabrook, LLC, is authorized to act as agent for the: Hudson Light & Power Department, Massachusetts Municipal Wholesale Electric Company, and Taunton Municipal Light Plant and has exclusive responsibility and control over the physical construction, operation and maintenance of the facility.

G. The issuance of this license will not be inimical to the common defense and security or to the health and safety of the public;

H. After weighing the environmental, economical, technical, and other benefits of the facility against environmental and other costs and considering available alternatives, the issuance of Facility Operating License No. NPF-86 subject to the conditions for protection of the environment set forth in the Environmental Protection Plan attached as Appendix B, is in accordance with 10 CFR 51 of the Commission's regulations and all applicable requirements have been satisfied; and

I. The receipt, possession and use of source, byproduct, and special nuclear material as authorized by this license will be in accordance with the Commission's regulations in 10 CFR 30, 40, and 70.

2. Based on the foregoing findings and the Commission's Memorandum and Order, CL 1-90-03 (March 1, 1990), Facility Operating License No. NPF-67 is superseded by Facility Operating License No. NPF-86, which is hereby amended to read as follows:

A. This license applies to the Seabrook Station, Unit 1, a pressurized water nuclear reactor and associated equipment (the facility), owned by the licensees. The facility is located in Seabrook Township, Rockingham County, on the southeast coast of the State of New Hampshire, and is described in the licensees' "Final Safety Analysis Report," as supplemented and amended, and in the licensees' Environmental Report, as supplemented and amended.

B. Subject to the conditions and requirements incorporated herein, the Commission hereby licenses:

(1) FPL Energy Seabrook, LLC, pursuant to Section 103 of the Act and 10 CFR 50, to possess, use and operate the facility at the designated location in Rockingham County, New Hampshire, in accordance with the procedures and limitations set forth in this license;

(2) Hudson Light and Power Department, Massachusetts Municipal Wholesale Electric Company, and Taunton Municipal Light Plant to possess the facility at the designated location in Rockingham County, New Hampshire, in accordance with the procedures and limitations set forth in this license;

(3) FPL Energy Seabrook, LLC, pursuant to the Act and 10 CFR 70, to receive, possess, and use at any time special nuclear material as reactor fuel, in accordance with the limitations for storage and amounts required for reactor operation, as described in the Final Safety Analysis Report, as supplemented and amended;

(4) FPL Energy Seabrook, LLC, pursuant to the Act and 10 CFR 30, 40, and 70, to receive, possess, and use at any time any byproduct, source, and special nuclear material as sealed neutron sources for reactor startup, sealed sources for reactor instrumentation and radiation monitoring equipment calibration, and as fission detectors in amounts as required;

(5) FPL Energy Seabrook, LLC, pursuant to the Act and 10 CFR 30, 40, and 70, to receive, possess, and use in amounts as required any byproduct, source, or special nuclear material without restriction to chemical or physical form, for sample analysis or instrument calibration or associated with radioactive apparatus or components;

(6) FPL Energy Seabrook, LLC, pursuant to the Act and 10 CFR 30, 40, and 70, to possess, but not separate, such byproduct and special nuclear materials as may be produced by the operation of the facility authorized herein; and

(7) DELETED

C. This license shall be deemed to contain and is subject to the conditions specified in the Commission's regulations set forth in 10 CFR Chapter I and is subject to all applicable provisions of the Act and to the rules, regulations, and orders of the Commission now or hereafter in effect; and is subject to the additional conditions specified or incorporated below:

(1) Maximum Power Level

FPL Energy Seabrook, LLC, is authorized to operate the facility at reactor core power levels not in excess of 3648 megawatts thermal (100% of rated power).

(2) Technical Specifications

The Technical Specifications contained in Appendix A, as revised through Amendment No. 113*, are hereby incorporated in the license. FPL Energy Seabrook, LLC shall operate the facility in accordance with the Technical Specifications and the Environmental Protection Plan.

(3) License Transfer to FPL Energy Seabrook, LLC

a. On the closing date(s) of the transfer of any ownership interests in Seabrook Station covered by the Order approving the transfer, FPL Energy Seabrook, LLC, shall obtain from each respective transferring owner all of the accumulated decommissioning trust funds for the facility, and ensure the deposit of such funds and additional funds, if necessary, into a decommissioning trust or trusts for Seabrook Station established by FPL Energy Seabrook, LLC, such that the amount of such funds deposited meets or exceeds the amount required under 10 CFR 50.75 with respect to the interest in Seabrook Station FPL Energy Seabrook, LLC, acquires on such dates(s).

b. With respect to the decommissioning trust(s) established by FPL Energy Seabrook, LLC,

(i) The decommissioning trust agreement must be in a form acceptable to the NRC.

(ii) Investments in the securities or other obligations of FPL Group Inc. or its affiliates, successors, or assigns shall be prohibited. In addition, except for investments tied to market indexes or other non-nuclear-sector mutual funds, investments in any entity owning one or more nuclear power plants shall be prohibited.

(iii) The decommissioning trust agreement must provide that no disbursements or payments from the trust(s), other than for ordinary administrative expenses, shall be made by the trustee until the trustee has first given the NRC 30 days prior written notice of payment. The decommissioning trust agreement shall further provide that no disbursements or payments from the trust(s) shall be made if the trustee receives prior written notice of objection from the Director of the Office of Nuclear Reactor Regulation.

(iv) The decommissioning trust agreement must provide that the agreement cannot be amended in any material respect without 30 days prior written notification to the Director of the Office of Nuclear Reactor Regulation.

(v) The appropriate section of the decommissioning trust agreement shall provide that the trustee, investment advisor, or anyone else directing the investments made in the trust(s) shall adhere to a "prudent investor" standard, as specified in 18 CFR 35.32(a)(3) of the Federal Energy Regulatory Commission's regulations.

c. FPL Energy Seabrook, LLC, shall take all necessary steps to ensure that the decommissioning trust(s) are maintained in accordance with the license transfer application and the requirements of the Order approving the transfer, and consistent with the safety evaluation supporting the Order.

d. FPL Energy Seabrook, LLC, shall take no action to cause FPL Group Capital, Inc. or its parent companies to void, cancel, or modify the Support Agreement to provide funding of up to $110 million for FPL Energy Seabrook, LLC, as represented in the license transfer application without prior written consent of the Director of the Office of Nuclear Reactor Regulation.

D. Exemptions

FPL Energy Seabrook, LLC, is exempted from the Section III.D.2(b)(ii) containment airlock testing requirements of Appendix J to 10 CFR 50, because of the special circumstances described in Section 6.2.6 of SER Supplement 5 and authorized by 10 CFR 50.12(a)(2)(ii) and (iii) (51 FR 37684 October 23, 1986).

NRC Materials License No. SNM-1963, issued December 19, 1985, granted an exemption pursuant to 10 CFR 70.24 with respect to requirements for criticality alarms. FPL Energy Seabrook, LLC, is hereby exempted from provisions of 10 CFR 70.24 insofar as this section applies to the storage and handling of new fuel assemblies in the new fuel storage vault, spent fuel pool (when dry), and shipping containers.

These exemptions, authorized by law, will not present an undue risk to the public health and safety and are consistent with the common defense and security. These exemptions are hereby granted pursuant to 10 CFR 50.12. With the granting of these exemptions, the facility will operate, to the extent authorized herein, in conformity with the application, as amended, the provisions of the Act, and the rules and regulations of the Commission.

E. Physical Security

The licensee shall fully implement and maintain in effect all provisions of the Commission-approved physical security, training and qualification, and safeguards contingency plans, including amendments made pursuant to provision of the Miscellaneous Amendments and Search Requirements revisions to 10 CFR 73.55 (51 FR 27817 and 27822) and to the authority of 10 CFR 50.90 and 10 CFR 50.54(p). The combined set of plans, which contains Safeguards Information protected under 10 CFR 73.21, is entitled: "Florida Power and Light & FPL Energy Seabrook Physical Security Plan, Training and Qualification Plan, and Safeguards Contingency Plan," submitted by letter dated September 23, 2004, and supplemented on October 15, October 22, and October 29, 2004.

F. Fire Protection

FPL Energy Seabrook, LLC, shall implement and maintain in effect all provisions of the approved fire protection program as described in the Final Safety Analysis Report, the Fire Protection Program Report, and the Fire Protection of Safe Shutdown Capability Report for the facility, as supplemented and amended, and as approved in the Safety Evaluation Report, dated March 1983; Supplement 4, dated May 1986; Supplement 5, dated July 1986; Supplement 6, dated October 1986; Supplement 7, dated October 1987; and Supplement 8, dated May 1989 subject to the following provisions: FPL Energy Seabrook, LLC, may make changes to the approved fire protection program without prior approval of the Commission, only if those changes would not adversely affect the ability to achieve and maintain shutdown in the event of a fire.

G. DELETED

H. Financial Protection

The licensees shall have and maintain financial protection of such type and in such amounts as the Commission shall require in accordance with Section 170 of the Atomic Energy Act of 1954, as amended, to cover public liability claims.

I. DELETED

J. Additional Conditions

The Additional Conditions contained in Appendix C, as revised through Amendment No. 112, are hereby incorporated into this license. FPL Energy Seabrook, LLC, shall operate the facility in accordance with the Additional Conditions.

K. Inadvertent Actuation of the Emergency Core Cooling System (ECCS)

Prior to startup from refueling outage 11, FPL Energy Seabrook commits to either upgrade the controls for the pressurizer power operated relief valves (PORV) to safety-grade status and confirm the safety-grade status and water-qualified capability of the PORVs, PORV block valves and associated piping or to provide a reanalysis of the inadvertent safety injection event, using NRC approved methodologies, that concludes that the pressurizer does not become water solid within the minimum allowable time for operators to terminate the event.

3. This license is effective as of the date of issuance and shall expire at midnight on March 15, 2030.

FOR THE NUCLEAR REGULATORY COMMISSION

(Original signed by:
Thomas E. Murley)

Thomas E. Murley, Director
Office of Nuclear Reactor Regulation

Attachments/Appendices:
1. Appendix A - Technical Specifications (NUREG-1386)
2. Appendix B - Environmental Protection Plan
3. Appendix C - Additional Conditions

Date of Issuance: March 15, 1990

NUREG-1386

Technical Specifications
Seabrook Station, Unit 1

Docket No. 50-443

Appendix "A" to
License No. NPF-86

Issued by the
U.S. Nuclear Regulatory Commission

Office of Nuclear Reactor Regulation

MARCH 1990

INDEX

1.0 DEFINITIONS

SECTION		PAGE
1.1	ACTION	1-1
1.2	ACTUATION LOGIC TEST	1-1
1.3	ANALOG CHANNEL OPERATIONAL TEST	1-1
1.4	AXIAL FLUX DIFFERENCE	1-1
1.5	CHANNEL CALIBRATION	1-1
1.6	CHANNEL CHECK	1-1
1.7	CONTAINMENT INTEGRITY	1-2
1.8	CONTROLLED LEAKAGE	1-2
1.9	CORE ALTERATION	1-2
1.10	CORE OPERATING LIMITS REPORT	1-2
1.11	DIGITAL CHANNEL OPERATIONAL TEST	1-2
1.12	DOSE EQUIVALENT I-131	1-3
1.13	$\bar{E}$ – AVERAGE DISINTEGRATION ENERGY	1-3
1.14	ENGINEERED SAFETY FEATURES RESPONSE TIME	1-3
1.15	FREQUENCY NOTATION	1-3
1.16	GASEOUS RADWASTE TREATMENT SYSTEM	1-3
1.17	IDENTIFIED LEAKAGE	1-3
1.18	MASTER RELAY TEST	1-4
1.19	MEMBER(S) OF THE PUBLIC	1-4
1.20	OFFSITE DOSE CALCULATION MANUAL	1-4
1.21	OPERABLE – OPERABILITY	1-4
1.22	OPERATIONAL MODE – MODE	1-4
1.23	PHYSICS TESTS	1-4
1.24	PRESSURE BOUNDARY LEAKAGE	1-4
1.25	PROCESS CONTROL PROGRAM	1-5
1.26	PURGE – PURGING	1-5
1.27	QUADRANT POWER TILT RADIO	1-5
1.28	RATED THERMAL POWER	1-5
1.29	REACTOR TRIP SYSTEM RESPONSE TIME	1-5
1.30	REPORTABLE EVENT	1-5
1.31	CONTAINMENT ENCLOSURE BUILDING INTEGRITY	1-5
1.32	SHUTDOWN MARGIN	1-6
1.33	SITE BOUNDARY	1-6
1.34	SLAVE RELAY TEST	1-6
1.35	(NOT USED)	1-6
1.36	SOURCE CHECK	1-6
1.37	STAGGERED TEST BASIS	1-6
1.38	THERMAL POWER	1-6
1.39	TRIP ACTUATING DEVICE OPERATIONAL TEST	1-6
1.40	UNIDENTIFIED LEAKAGE	1-7
1.41	UNRESTRICTED AREA	1-7
1.42	(NOT USED)	1-7
1.43	VENTING	1-7
TABLE 1.1	FREQUENCY NOTATION	1-8
TABLE 1.2	OPERATIONAL MODES	1-8

INDEX

2.0 SAFETY LIMITS AND LIMITING SAFETY SYSTEM SETTINGS

SECTION		PAGE
2.1	SAFETY LIMITS (SL)	2-1
2.1.1	REACTOR CORE SLs	2-1
2.1.2	REACTOR COOLANT SYSTEM PRESSURE SL	2-1
2.1.3	SAFETY LIMIT VIOLATIONS	2-1
FIGURE 2.1-1	(THIS FIGURE IS NOT USED)	2-2
2.2	LIMITING SAFETY SYSTEM SETTINGS	
2.2.1	REACTOR TRIP SYSTEM INSTRUMENTATION SETPOINTS	2-3
TABLE 2.2-1	REACTOR TRIP SYSTEM INSTRUMENTATION TRIP SETPOINTS	2-4
	BASES	
2.1	SAFETY LIMITS (SLs)	
2.1.1	REACTOR CORE SLs	B 2-1
2.1.2	REACTOR COOLANT SYSTEM PRESSURE SL	B 2-2a
2.1.3	SAFETY LIMIT VIOLATIONS	B-2-2b
2.2	LIMITING SAFETY SYSTEM SETTINGS	
2.2.1	REACTOR TRIP SYSTEM INSTRUMENTATION SETPOINTS	B 2-3

3.0/4.0 LIMITING CONDITIONS FOR OPERATION AND SURVEILLANCE REQUIREMENTS

3/4.0	APPLICABILITY	3/4 0-1
3/4.1	REACTIVITY CONTROL SYSTEMS	
3/4.1.1	BORATION CONTROL	
	Shutdown Margin – T_{avg} Greater Than 200°F	3/4 1-1
	Shutdown Margin – T_{avg} Less Than or Equal to 200°F	3/4 1-3
	Moderator Temperature Coefficient	3/4 1-4
	Minimum Temperature for Criticality	3/4 1-6

INDEX

LIMITING CONDITIONS FOR OPERATION AND SURVEILLANCE REQUIREMENTS

SECTION		PAGE
3/4.1.2	BORATION SYSTEMS	
	Isolation of Unborated Water Sources – Shutdown	3/4 1-14
3/4.1.3	MOVABLE CONTROL ASSEMBLIES	
	Group Height	3/4 1-15
TABLE 3.1-1	ACCIDENT ANALYSES REQUIRING REEVALUATION IN THE EVENT OF AN INOPERABLE FULL-LENGTH ROD	3/4 1-17
	Position Indication Systems – Operating	3/4 1-18
	Position Indication System – Shutdown	3/4 1-19
	Rod Drop Time	3/4 1-20
	Shutdown Rod Insertion Limit	3/4 1-21
	Control Rod Insertion Limits	3/4 1-22
3/4.2	POWER DISTRIBUTION LIMITS	
3/4.2.1	AXIAL FLUX DIFFERENCE	3/4 2-1
3/4.2.2	HEAT FLUX HOT CHANNEL FACTOR – F_Q (Z)	3/4 2-4
3/4.2.3	NUCLEAR ENTHALPY RISE HOT CHANNEL FACTOR	3/4 2-8
3/4.2.4	QUADRANT POWER TILT RATIO	3/4 2-9
3/4.2.5	DNB PARAMETERS	3/4 2-10
3/4.3	INSTRUMENTATION	
3/4.3.1	REACTOR TRIP SYSTEM INSTRUMENTATION	3/4 3-1
TABLE 3.3-1	REACTOR TRIP SYSTEM INSTRUMENTATION	3/4 3-2

INDEX

LIMITING CONDITIONS FOR OPERATION AND SURVEILLANCE REQUIREMENTS

SECTION		PAGE
TABLE 3.3-2	(This table number is not used)	
TABLE 4.3-1	REACTOR TRIP SYSTEM INSTRUMENTATION SURVEILLANCE REQUIREMENTS	3/4 3-9
3/4.3.2	ENGINEERED SAFETY FEATURES ACTUATION SYSTEM INSTRUMENTATION	3/4 3-14
TABLE 3.3-3	ENGINEERED SAFETY FEATURES ACTUATION SYSTEM INSTRUMENTATION	3/4 3-16
TABLE 3.3-4	ENGINEERED SAFETY FEATURES ACTUATION SYSTEM INSTRUMENTATION TRIP SETPOINTS	3/4 3-24
TABLE 3.3-5	(This table number is not used)	
TABLE 4.3-2	ENGINEERED SAFETY FEATURES ACTUATION SYSTEM INSTRUMENTATION SURVEILLANCE REQUIREMENTS	3/4 3-31
3/4.3.3	MONITORING INSTRUMENTATION	
	Radiation Monitoring For Plant Operations	3/4 3-36
TABLE 3.3-6	RADIATION MONITORING INSTRUMENTATION FOR PLANT OPERATIONS	3/4 3-37
TABLE 4.3-3	RADIATION MONITORING INSTRUMENTATION FOR PLANT OPERATIONS SURVEILLANCE REQUIREMENTS	3/4 3-39
	(THIS SPECIFICATION NUMBER IS NOT USED)	3/4 3-40
	(THIS SPECIFICATION NUMBER IS NOT USED)	3/4 3-41
TABLE 3.3-7	(THIS TABLE NUMBER IS NOT USED)	3/4 3-42
TABLE 4.3.4	(THIS TABLE NUMBER IS NOT USED)	3/4 3-43
	(THIS SPECIFICATION NUMBER IS NOT USED)	3/4 3-44
TABLE 3.3-8	(THIS TABLE NUMBER IS NOT USED)	3/4 3-45
	Remote Shutdown System	3/4 3-46
TABLE 3.3-9	REMOTE SHUTDOWN SYSTEM	3/4 3-47
	Accident Monitoring Instrumentation	3/4 3-49
TABLE 3.3-10	ACCIDENT MONITORING INSTRUMENTATION	3/4 3-50
TABLE 3.3-11	(This table number is not used)	3/4 3-53
	Radioactive Liquid Effluent Monitoring Instrumentation	3/4 3-55
TABLE 3.3-12	(THIS TABLE NUMBER IS NOT USED)	3/4 3-56

INDEX

LIMITING CONDITIONS FOR OPERATION AND SURVEILLANCE REQUIREMENTS

SECTION		PAGE
TABLE 4.3-5	(THIS TABLE NUMBER IS NOT USED)	3/4 3-58
	Explosive Gas Monitoring Instrumentation	3/4 3-60
TABLE 3.3-13	EXPLOSIVE GAS MONITORING INSTRUMENTATION	3/4 3-61
TABLE 4.3-6	EXPLOSIVE GAS MONITORING INSTRUMENTATION SURVEILLANCE REQUIREMENTS	3/4 3-64
3/4.3.4	(THIS SPECIFICATION NUMBER IS NOT USED)	3/4 3-67
3/4.4	REACTOR COOLANT SYSTEM	
3/4.4.1	REACTOR COOLANT LOOPS AND COOLANT CIRCULATION	
	Startup and Power Operation	3/4 4-1
	Hot Standby	3/4 4-2
	Hot Shutdown	3/4 4-4
	Cold Shutdown – Loops Filled	3/4 4-6
	Cold Shutdown – Loops Not Filled	3/4 4-7
3/4.4.2	SAFETY VALVES	
	Shutdown	3/4 4-8
	Operating	3/4 4-9
3/4.4.3	PRESSURIZER	3/4 4-10
3/4.4.4	RELIEF VALVES	3/4 4-11
3/4.4.5	STEAM GENERATORS	3/4 4-13
TABLE 4.4-1	MINIMUM NUMBER OF STEAM GENERATORS TO BE INSPECTED DURING INSERVICE INSPECTION	3/4 4-18
TABLE 4.4-2	STEAM GENERATOR TUBE INSPECTION	3/4 4-19
3/4.4.6	REACTOR COOLANT SYSTEM LEAKAGE	
	Leakage Detection Systems	3/4 4-20
	Operational Leakage	3/4 4-21
TABLE 3.4-1	REACTOR COOLANT SYSTEM PRESSURE ISOLATION VALVES	3/4 4-24
3/4.4.7	(THIS SPECIFICATION NUMBER IS NOT USED)	3/4 4-25
TABLE 3-4.2	(THIS TABLE NUMBER IS NOT USED)	3/4 4-26
3/4.4.8	SPECIFIC ACTIVITY	3/4 4-27

INDEX

LIMITING CONDITIONS FOR OPERATION AND SURVEILLANCE REQUIREMENTS

SECTION		PAGE
FIGURE 3.4-1	DOSE EQUIVALENT I-131 REACTOR COOLANT SPECIFIC ACTIVITY LIMIT VERSUS PERCENT OF RATED THERMAL POWER WITH THE REACTOR COOLANT SPECIFIC ACTIVITY > 1μCi/gram DOSE EQUIVALENT I-131	3/4 4-28
TABLE 4.4-3	REACTOR COOLANT SPECIFIC ACTIVITY SAMPLE AND ANALYSIS PROGRAM	3/4 4-29
3/4.4.9	PRESSURE/TEMPERATURE LIMITS	
	General	3/4 4-30
FIGURE 3.4-2	REACTOR COOLANT SYSTEM HEATUP LIMITATIONS – APPLICABLE UP TO 11.1 EFPY	3/4 4-31
FIGURE 3.4-3	REACTOR COOLANT SYSTEM COOLDOWN LIMITATIONS – APPLICABLE UP TO 11.1 EFPY	3/4 4-32
	Pressurizer	3/4 4-33
	Overpressure Protection Systems	3/4 4-34
FIGURE 3.4-4	RCS COLD OVERPRESSURE PROTECTION SETPOINTS	3/4 4-36
3/4.4.10	STRUCTURAL INTEGRITY	3/4 4-37
3/4.4.11	REACTOR COOLANT SYSTEM VENTS	3/4 4-38
3/4.5	EMERGENCY CORE COOLING SYSTEMS	
3/4.5.1	ACCUMULATORS	
	Hot Standby, Startup, and Power Operation	3/4 5-1
	Shutdown	3/4 5-3
3/4.5.2	ECCS SUBSYSTEMS – T_{avg} GREATER THAN OR EQUAL TO 350°F	3/4 5-4
3/4.5.3	ECCS SUBSYSTEMS - T_{avg} LESS THAN 350°F	3/4 5-8
	ECCS SYBSYSTEMS - T_{avg} Equal To or Less Than 200°F	3/4 5-10
3/4.5.4	REFUELING WATER STORAGE TANK	3/4 5-11
3/4.6	CONTAINMENT SYSTEMS	
3/4.6.1	PRIMARY CONTAINMENT	
	Containment Integrity	3/4 6-1
	Containment Leakage	3/4 6-2

INDEX

LIMITING CONDITIONS FOR OPERATION AND SURVEILLANCE REQUIREMENTS

SECTION		PAGE
	Containment Air Locks	3/4 6-7
	Internal Pressure	3/4 6-9
	Air Temperature	3/4 6-10
	Containment Vessel Structural Integrity	3/4 6-11
	Containment Ventilation System	3/4 6-12
3/4.6.2	DEPRESSURIZATION AND COOLING SYSTEMS	
	Containment Spray System	3/4 6-14
	Spray Additive System	3/4 6-15
3/4.6.3	CONTAINMENT ISOLATION VALVES	3/4 6-16
3/4.6.4	COMBUSTIBLE GAS CONTROL	
	(THIS SPECIFICATION NUMBER IS NOT USED)	3/4 6-18
	(THIS SPECIFICATION NUMBER IS NOT USED)	3/4 6-19
	Hydrogen Mixing System	3/4 6-20
3/4.6.5	CONTAINMENT ENCLOSURE BUILDING	
	Containment Enclosure Emergency Air Cleanup System	3/4 6-21
	Containment Enclosure Building Integrity	3/4 6-24
	Containment Enclosure Building Structural Integrity	3/4 6-25
3/4.7	PLANT SYSTEMS	
3/4.7.1	TURBINE CYCLE	
	Safety Valves	3/4 7-1
TABLE 3.7-1	MAXIMUM ALLOWABLE POWER RANGE NEUTRON FLUX HIGH SETPOINT WITH INOPERABLE STEAM LINE SAFETY VALVES DURING FOUR LOOP OPERATIONS	3/4 7-2
TABLE 3.7-2	STEAM LINE SAFETY VALVES PER LOOP	3/4 7-2
	Auxiliary Feedwater System	3/4 7-3
	Condensate Storage Tank	3/4 7-6
	Specific Activity	3/4 7-7
TABLE 4.7-1	(THIS TABLE NUMBER IS NOT USED)	3/4 7-8
	Main Steam Line Isolation Valves	3/4 7-9
	Atmospheric Relief Valves	3/4 7-10

INDEX

LIMITING CONDITIONS FOR OPERATION AND SURVEILLANCE REQUIREMENTS

SECTION		PAGE
3/4.7.2	STEAM GENERATOR PRESSURE/TEMPERATURE LIMITATION	3/4 7-11
3/4.7.3	PRIMARY COMPONENT COOLING WATER SYSTEM	3/4 7-12
3/4.7.4	SERVICE WATER SYSTEM / ULTIMATE HEAT SINK	3/4 7-13
3/4.7.5	(THIS SPECIFICATION NUMBER IS NOT USED)	3/4 7-14
3/4.7.6	CONTROL ROOM SUBSYSTEM	3/4 7-16
	Emergency Makeup Air and Filtration	3/4 7-16
	Air Conditioning	3/4 7-18a
3/4.7.7	SNUBBERS	3/4 7-19
3/4.7.8	SEALED SOURCE CONTAMINATION	3/4 7-20
3/4.7.9	(THIS SPECIFICATION NUMBER IS NOT USED)	3/4 7-22
3/4.7.10	(THIS SPECIFICATION NUMBER IS NOT USED)	3/4 7-23
TABLE 3.7-3	(THIS TABLE NUMBER IS NOT USED)	3/4 7-24
3/4.8	ELECTRICAL POWER SYSTEMS	
3/4.8.1	A.C. SOURCES	
	Operating	3/4 8-1
TABLE 4.8-1	(THIS TABLE NUMBER IS NOT USED)	3/4 8-10
	Shutdown	3/4 8-11
3/4.8.2	D.C. SOURCES	
	Operating	3/4 8-12
TABLE 4.8-2	BATTERY SURVEILLANCE REQUIREMENTS	3/4 8-14
	Shutdown	3/4 8-15
3/4.8.3	ONSITE POWER DISTRIBUTION	
	Operating	3/4 8-16
	Shutdown	3/4 8-18
	Trip Circuit for Inverter I-2A	3/4 8-19
3/4.8.4	ELECTRICAL EQUIPMENT PROTECTIVE DEVICES	
	A.C. Circuits Inside Primary Containment	3/4 8-20
	Containment Penetration Conductor Overcurrent Protective Devices and Protective Devices for Class 1E Power Sources to Non-Class 1E Circuits	3/4 8-21
	Motor-Operated Valves Thermal Overload Protection	3/4 8-24
3/4.9	REFUELING OPERATIONS	
3/4.9.1	BORON CONCENTRATION	3/4 9-1
3/4 9.2	INSTRUMENTATION	3/4 9-2
3/4 9.3	DECAY TIME	3/4 9-3

INDEX

LIMITING CONDITIONS FOR OPERATION AND SURVEILLANCE REQUIREMENTS

SECTION		PAGE
3/4.9.4	CONTAINMENT BUILDING PENETRATIONS	3/4 9-4
3/4.9.5	(THIS SPECIFICATION NUMBER IS NOT USED)	3/4 9-5
3/4.9.6	(THIS SPECIFICATION NUMBER IS NOT USED)	3/4 9-6
3/4.9.7	(THIS SPECIFICATION NUMBER IS NOT USED)	3/4 9-7
3/4.9.8	RESIDUAL HEAT REMOVAL AND COOLANT CIRCULATION	
	High Water Level	3/4 9-8
	Low Water Level	3/4 9-9
3/4 9.9	(THIS SPECIFICATION NUMBER IS NOT USED)	3/4 9-10
3/4 9.10	WATER LEVEL – REACTOR VESSEL	3/4 9-11
3/4 9.11	WATER LEVEL – STORAGE POOL	3/4 9-12
3/4.9.12	FUEL STORAGE BUILDING EMERGENCY AIR CLEANING SYSTEM	3/4 9-13
3/4 9.13	SPENT FUEL ASSEMBLY STORAGE	3/4 9-16
FIGURE 3.9-1	FUEL ASSEMBLY BURNUP VS. INITIAL ENRICHMENT FOR SPENT FUEL ASSEMBLY STORAGE	3/4 9-17
3/4.9.14	NEW FUEL ASSEMBLY STORAGE	3/4 9-18
3/4.10	SPECIAL TEST EXCEPTIONS	
3/4.10.1	SHUTDOWN MARGIN	3/4 10-1
3/4.10.2	GROUP HEIGHT, INSERTION, AND POWER DISTRIBUTION LIMITS	3/4 10-2
3/4.10.3	PHYSICS TESTS	3/4 10-3
3/4.10.4	(THIS SPECIFICATION NUMBER IS NOT USED)	3/4 10-4
3/4.10.5	POSITION INDICATION SYSTEM-SHUTDOWN	3/4 10-5
3/4.11	RADIOACTIVE EFFLUENTS	
3/4.11.1	LIQUID EFFLUENTS	
	(THIS SPECIFICATION NUMBER IS NOT USED)	3/4 11-1
	(THIS SPECIFICATION NUMBER IS NOT USED)	3/4 11-2
	(THIS SPECIFICATION NUMBER IS NOT USED)	3/4 11-3
	Liquid Holdup Tanks	3/4 11-4
3/4.11.2	GASEOUS EFFLUENTS	
	(THIS SPECIFICATION NUMBER IS NOT USED)	3/4 11-5
	(THIS SPECIFICATION NUMBER IS NOT USED)	3/4 11-6
	(THIS SPECIFICATION NUMBER IS NOT USED)	3/4 11-7
	(THIS SPECIFICATION NUMBER IS NOT USED)	3/4 11-8
	Explosive Gas Mixture – System	3/4 11-9
3/4.11.3	(THIS SPECIFICATION NUMBER IS NOT USED)	3/4 11-10
3/4.11.4	(THIS SPECIFICATION NUMBER IS NOT USED)	3/4 11-12
3/4.12	RADIOLOGICAL ENVIRONMENTAL MONITORING	
3/4.12.1	(THIS SPECIFICATION NUMBER IS NOT USED)	3/4 12-1

INDEX

LIMITING CONDITIONS FOR OPERATION AND SURVEILLANCE REQUIREMENTS

SECTION		PAGE
3/4.12.2	(THIS SPECIFICATION NUMBER IS NOT USED)	3/4 12-3
3/4.12.3	(THIS SPECIFICATION NUMBER IS NOT USED)	3/4 12-5

3.0/4.0 BASES

3/4.0	APPLICABILITY	B 3/4 0-1
3/4.1	REACTIVITY CONTROL SYSTEMS	
3/4.1.1	BORATION CONTROL	B 3/4 1-1
3/4.1.2	BORATION SYSTEMS	B 3/4 1-3
3/4.1.3	MOVABLE CONTROL ASSEMBLIES	B 3/4 1-4
3/4.2	POWER DISTRIBUTION LIMITS	B 3/4 2-1
3/4.2.1	AXIAL FLUX DIFFERENCE	B 3/4 2-1
3/4.2.2 and 3/4.2.3	HEAT FLUX HOT CHANNEL FACTOR AND NUCLEAR ENTHALPY RISE HOT CHANNEL FACTOR	B 3/4 2-2
3/4.2.4	QUADRANT POWER TILT RATIO	B 3/4 2-3
3/4.2.5	DNB PARAMETERS	B 3/4 2-4
3/4.3	INSTRUMENTATION	
3/4.3.1 and 3/4.3.2	REACTOR TRIP SYSTEM and ENGINEERED SAFETY FEATURES ACTUATION SYSTEM INSTRUMENTATION	B 3/4 3-1
3/4.3.3	MONITORING INSTRUMENTATION	B 3/4 3-3
3/4.3.4	(THIS SPECIFICATION NUMBER IS NOT USED)	B 3/4 3-6
3/4.4	REACTOR COOLANT SYSTEM	
3/4.4.1	REACTOR COOLANT LOOPS AND COOLANT CIRCULATION	B 3/4 4-1
3/4.4.2	SAFETY VALVES	B 3/4 4-1
3/4.4.3	PRESSURIZER	B 3/4 4-2
3/4.4.4	RELIEF VALVES	B 3/4 4-2
3/4.4.5	STEAM GENERATORS	B 3/4 4-2
3/4.4.6	REACTOR COOLANT SYSTEM LEAKAGE	B 3/4 4-3
3/4.4.7	(THIS SPECIFICATION NUMBER IS NOT USED)	B 3/4 4-5
3/4.4.8	SPECIFIC ACTIVITY	B 3/4 4-5
3/4.4.9	PRESSURE/TEMPERATURE LIMITS	B 3/4 4-7
FIGURE B 3/4.4-1	(THIS FIGURE NUMBER NOT USED)	B 3/4 4-9
FIGURE B 3/4.4-2	(THIS FIGURE NUMBER NOT USED)	B 3/4 4-10

INDEX

BASES

SECTION		PAGE
TABLE B 3/4.4-1	(THIS TABLE NUMBER IS NOT USED)	B 3/4 4-11
3/4.4.10	STRUCTURAL INTEGRITY	B 3/4 4-16
3/4.4.11	REACTOR COOLANT SYSTEM VENTS	B 3/4 4-16
3/4.5	EMERGENCY CORE COOLING SYSTEMS	
3/4.5.1	ACCUMULATORS	B 3/4 5-1
3/4.5.2 and 3/4.5.3	ECCS SUBSYSTEMS	B 3/4 5-1
3/4.5.4	REFUELING WATER STORAGE TANK	B 3/4 5-2
3/4.6	CONTAINMENT SYSTEMS	
3/4.6.1	PRIMARY CONTAINMENT	B 3/4 6-1
3/4.6.2	DEPRESSURIZATION AND COOLING SYSTEMS	B 3/4 6-3
3/4.6.3	CONTAINMENT ISOLATION VALVES	B 3/4 6-3
3/4.6.4	COMBUSTIBLE GAS CONTROL	B 3/4 6-3
3/4.6.5	CONTAINMENT ENCLOSURE BUILDING	B 3/4 6-4
3/4.7	PLANT SYSTEMS	
3/4.7.1	TURBINE CYCLE	B 3/4 7-1
3/4.7.2	STEAM GENERATOR PRESSURE/TEMPERATURE LIMITATION	B 3/4 7-3
3/4.7.3	PRIMARY COMPONENT COOLING WATER SYSTEM	B 3/4 7-3
3/4.7.4	SERVICE WATER SYSTEM / ULTIMATE HEAT SINK	B 3/4 7-3
3/4.7.5	(THIS SPECIFICATION NUMBER IS NOT USED)	B 3/4 7-3A
3/4.7.6	CONTROL ROOM SUBSYSTEMS	B 3/4 7-4
3/4.7.7	SNUBBERS	B 3/4 7-4a
3/4.7.8	SEALED SOURCE CONTAMINATION	B 3/4 7-5
3/4.7.9	(THIS SPECIFICATION NUMBER IS NOT USED)	B 3/4 7-5
3/4.7.10	(THIS SPECIFICATION NUMBER IS NOT USED)	B 3/4 7-5
3/4.8	ELECTRICAL POWER SYSTEMS	
3/4.8.1, 3/4.8.2, and 3/4.8.3	A.C. SOURCES, D.C. SOURCES, and ONSITE POWER DISTRIBUTION	B 3/4 8-1
3/4.8.4	ELECTRICAL EQUIPMENT PROTECTIVE DEVICES	B 3/4 8-3
3/4.9	REFUELING OPERATIONS	
3/4.9.1	BORON CONCENTRATION	B 3/4 9-1
3/4.9.2	INSTRUMENTATION	B 3/4 9-1
3/4.9.3	DECAY TIME	B 3/4 9-1
3/4.9.4	CONTAINMENT BUILDING PENETRATIONS	B 3/4 9-1
3/4.9.5	COMMUNICATIONS	B 3/4 9-1
3/4.9.6	REFUELING MACHINE	B 3/4 9-1
3/4.9.7	CRANE TRAVEL – SPENT FUEL STORAGE BUILDING	B 3/4 9-2

INDEX

BASES

SECTION		PAGE
3/4.9.8	RESIDUAL HEAT REMOVAL AND COOLANT CIRCULATION	B 3/4 9-2
3/4.9.9	(THIS SPECIFICATION NUMBER IS NOT USED)	B 3/4 9-2
3/4.9.10 and 3/4.9.11	WATER LEVEL – REACTOR VESSEL and STORAGE POOL	B 3/4 9-2
3/4.9.12	FUEL SOTRAGE BUILDING EMERGENCY AIR CLEANING SYSTEM	B 3/4 9-2
3/4.9.13	SPENT FUEL ASSEMBLY STORAGE	B 3/4 9-3
3/4.9.14	NEW FUEL ASSEMBLY STORAGE	B 3/4 9-3
3/4.10	SPECIAL TEST EXCEPTIONS	
3/4.10.1	SHUTDOWN MARGIN	B 3/4 10-1
3/4.10.2	GROUP HEIGHT, INSERTION, AND POWER DISTRIBUTION LIMITS	B 3/4 10-1
3/4.10.3	PHYSICS TESTS	B 3/4 10-1
3/4.10.4	(THIS SPECIFICATION NUMBER IS NOT USED)	B 3/4 10-1
3/4.10.5	POSITION INDICATION SYSTEM – SHUTDOWN	B 3/4 10-1
3/4.10.6	REACTOR COOLANT LOOPS	B 3/4 10-1
3/4.11	RADIOACTIVE EFFLUENTS	
3/4.11.1	(THIS SPECIFICATION NUMBER IS NOT USED)	B 3/4 11-1
3/4.11.2	GASEOUS EFFLUENTS	B 3/4 11-2
3/4.11.3	(THIS SPECIFICATION NUMBER IS NOT USED)	B 3/4 11-5
3/4.11.4	(THIS SPECIFICATION NUMBER IS NOT USED)	B 3/4 11-5
3/4.12	RADIOLOGICAL ENVIRONMENTAL MONITORING	
3/4.12.1	(THIS SPECIFICATION NUMBER IS NOT USED)	B 3/4 12-1
3/4.12.2	(THIS SPECIFICATION NUMBER IS NOT USED)	B 3/4 12-1
3/4.12.3	(THIS SPECIFICATION NUMBER IS NOT USED)	B 3/4 12-2
5.0	DESIGN FEATURES	
5.1	SITE	
5.1.1	EXCLUSION AREA	5-1
5.1.2	LOW POPULATION ZONE	5-1
5.1.3	MAPS DEFINING UNRESTRICTED AREAS AND SITE BOUNDARY FOR RADIOACTIVE GASEOUS AND LIQUID EFFLUENTS	5-1
FIGURE 5.1-1	SITE AND EXCLUSION AREA BOUNDARY	5-3
FIGURE 5.1-2	LOW POPULATION ZONE	5-5
FIGURE 5.1-3	LIQUID EFFLUENT DISCHARGE LOCATION	5-7
5.2	CONTAINMENT	
5.2.1	CONFIGURATION	5-1
5.2.2	DESIGN PRESSURE AND TEMPERATURE	5-9

INDEX

5.0 DESIGN FEATURES

SECTION		PAGE
5.3	REACTOR CORE	
5.3.1	FUEL ASSEMBLIES	5-9
5.3.2	CONTROL ROD ASSEMBLIES	5-9
5.4	REACTOR COOLANT SYSTEM	
5.4.1	DESIGN PRESSURE AND TEMPERATURE	5-9
5.4.2	VOLUME	5-9
5.5	(THIS SPECIFICATION NUMBER IS NOT USED)	5-9
5.6	FUEL STORAGE	
5.6.1	CRITICALITY	5-10
5.6.2	DRAINAGE	5-10
5.6.3	CAPACITY	5-10
5.7	COMPONENT CYCLIC OR TRANSIENT LIMIT	5-10
TABLE 5.7-1	COMPONENT CYCLIC OR TRANSIENT LIMITS	5-11

6.0 ADMINISTRATIVE CONTROLS

6.1	RESPONSIBILITY	6-1
6.2	ORGANIZATION	6-1
6.2.1	OFFSITE AND ONSITE ORGANIZATIONS	6-1
6.2.2	STATION STAFF	6-2
TABLE 6.2-1	MINIMUM SHIFT CREW COMPOSITION	6-3
6.2.3	(THIS SPECIFICATION NUMBER IS NOT USED)	6-4
6.2.4	SHIFT TECHNICAL ADVISOR	6-4
6.3	(THIS SPECIFICATION NUMBER IS NOT USED)	6-4

INDEX

6.0 ADMINISTRATIVE CONTROLS

SECTION		PAGE
6.4	(THIS SPECIFICATION NUMBER IS NOT USED)	6-4
6.5	(THIS SPECIFICATION NUMBER IS NOT USED)	6-4
6.6	SAFETY LIMIT VIOLATION	6-4
6.7	PROCEDURES AND PROGRAMS	6-5
6.8	REPORTING REQUIREMENTS	
6.8.1	ROUTINE REPORTS	6-11
	Startup Report	6-11
	Annual Reports	6-12
	Annual Radiological Environmental Operating Report	6-13
	Annual Radioactive Effluent Release Report	6-13
	CORE OPERATING LIMITS REPORT	6-14
6.8.2	SPECIAL REPORTS	6-19

INDEX

6.0 ADMINISTRATIVE CONTROLS

SECTION		PAGE
6.9	(THIS SPECIFICATION NUMBER IS NOT USED)	6-19
6.10	RADIATION PROTECTION PROGRAM	6-19
6.11	HIGH RADIATION AREA	6-19
6.12	PROCESS CONTROL PROGRAM (PCP)	6-20
6.13	OFFSITE DOSE CALCULATION MANUAL (ODCM)	6-20
6.14	MAJOR CHANGES TO LIQUID, GASEOUS, AND SOLID RADWASTE TREATMENT SYSTEMS	6-21
6.15	CONTAINMENT LEAKAGE RATE TESTING PROGRAM	6-22

1.0 DEFINITIONS

The defined terms of this section appear in capitalized type and are applicable throughout these Technical Specifications.

ACTION

1.1 ACTION shall be that part of a Technical Specification which prescribes remedial measures required under designated conditions.

ACTUATION LOGIC TEST

1.2 An ACTUATION LOGIC TEST shall be the application of various simulated input combinations in conjunction with each possible interlock logic state and verification of the required logic output. The ACTUATION LOGIC TEST shall include a continuity check, as a minimum, of output devices.

ANALOG CHANNEL OPERATIONAL TEST

1.3 An ANALOG CHANNEL OPERATIONAL TEST shall be the injection of a simulated signal into the channel as close to the sensor as practicable to verify OPERABILITY of alarm, interlock and/or trip functions. The ANALOG CHANNEL OPERATIONAL TEST shall include adjustments, as necessary, of the alarm, interlock and/or Trip Setpoints such that the Setpoints are within the required range and accuracy.

AXIAL FLUX DIFFERENCE

1.4 AXIAL FLUX DIFFERENCE shall be the difference in normalized flux signals between the top and bottom halves of a two section excore neutron detector.

CHANNEL CALIBRATION

1.5 A CHANNEL CALIBRATION shall be the adjustment, as necessary, of the channel such that it responds within the required range and accuracy to known values of input. The CHANNEL CALIBRATION shall encompass the entire channel including the sensors and alarm, interlock and/or trip functions and may be performed by any series of sequential, overlapping, or total channel steps such that the entire channel is calibrated.

CHANNEL CHECK

1.6 A CHANNEL CHECK shall be the qualitative assessment of channel behavior during operation by observation. This determination shall include, where possible, comparison of the channel indication and/or status with other indications and/or status derived from independent instrument channels measuring the same parameter.

CONTAINMENT INTEGRITY

1.7 CONTAINMENT INTEGRITY shall exist when:

a. All penetrations required to be closed during accident conditions are either:

1) Capable of being closed by an OPERABLE containment automatic isolation valve system, or

2) Closed by manual valves, blind flanges, or deactivated automatic valves secured in their closed positions.

b. All equipment hatches are closed and sealed,
c. Each air lock is in compliance with the requirements of Specification 3.6.1.3,
d. The containment leakage rates are in accordance with the Containment Leakage Rate Testing Program, and
e. The sealing mechanism associated with each penetration (e.g., welds, bellows, or 0-rings) is OPERABLE.

CONTROLLED LEAKAGE

1.8 CONTROLLED LEAKAGE shall be that seal water flow supplied to the reactor coolant pump seals.

CORE ALTERATION

1.9 CORE ALTERATION shall be the movement or any fuel, sources, or reactivity control components within the reactor vessel with the vessel head removed and fuel in the vessel. Suspension of CORE ALTERATIONs shall not preclude completion of movement of a component to a safe position.

CORE OPERATING LIMITS REPORT

1.10 The CORE OPERATING LIMITS REPORT (COLR) provides core operating limits for the current operating reload cycle. The cycle specific core operating limits shall be determined for each reload cycle in accordance with Specification 6.8.1.6. Plant operation within these operating limits is addressed in individual specifications.

DIGITAL CHANNEL OPERATIONAL TEST

1.11 A DIGITAL CHANNEL OPERATIONAL TEST shall consist of exercising the digital computer hardware using data base manipulation and/or injecting simulated process data to verify OPERABILITY of alarm and/or trip functions. The Digital Channel Operational Test definition is only applicable to the Radiation Monitoring Equipment.

DOSE EQUIVALENT I-131

1.12 DOSE EQUIVALENT I-131 shall be that concentration of I-131 (microCurie/gram) which alone would produce the same TEDE dose as the quantity and isotopic mixture of I-131, I-132, I-133, I-134, and I-135 actually present. The thyroid dose conversion factors used for this calculation shall be those listed under inhalation in Federal Guidance Report No. 11 (FGR 11), "Limiting Values of Radionuclide Intake and Air Concentration and Dose Conversion Factors for Inhalation, Submersion and Ingestion," 1989.

$\bar{E}$ - AVERAGE DISINTEGRATION ENERGY

1.13 $\bar{E}$ shall be the average (weighted in proportion to the concentration of each radionuclide in the sample) of the sum of the average beta and gamma energies per disintegration (MeV/d) for the radionuclides in the sample with half-lives greater than 10 minutes.

ENGINEERED SAFETY FEATURES (ESF) RESPONSE TIME

1.14 The ESF RESPONSE TIME shall be that time interval from when the monitored parameter exceeds its actuation setpoint at the channel sensor until the ESF equipment is capable of performing its safety function (i.e., the valves travel to their required positions, pump discharge pressures reach their required values, etc.). Times shall include diesel generator starting and sequence loading delays where applicable. The response time may be measured by means of any series of sequential, overlapping, or total steps so that the entire response time is measured. In lieu of measurement, response time may be verified for selected components provided that the components and methodology for verification have been previously reviewed and approved by the NRC.

FREQUENCY NOTATION

1.15 The FREQUENCY NOTATION specified for the performance of Surveillance Requirements shall correspond to the intervals defined in Table 1.1.

GASEOUS RADWASTE TREATMENT SYSTEM

1.16 A GASEOUS RADWASTE TREATMENT SYSTEM shall be any system designed and installed to reduce radioactive gaseous effluents by collecting Reactor Coolant System offgases from the Reactor Coolant System and providing for delay or holdup for the purpose of reducing the total radioactivity prior to release to the environment.

IDENTIFIED LEAKAGE

1.17 IDENTIFIED LEAKAGE shall be:

a. Leakage (except CONTROLLED LEAKAGE) into closed systems, such as pump seal or valve packing leaks that are captured and conducted to a sump or collecting tank, or

b. Leakage into the containment atmosphere from sources that are both specifically located and known either not to interfere with the operation of Leakage Detection Systems or not to be PRESSURE BOUNDARY LEAKAGE, or

c. Reactor Coolant System leakage through a steam generator to the Secondary Coolant System.

MASTER RELAY TEST

1.18 A MASTER RELAY TEST shall be the energization of each master relay and verification of OPERABILITY of each relay. The MASTER RELAY TEST shall include, a continuity check of each associated slave relay.,

MEMBER(S) OF THE PUBLIC

1.19 MEMBER(S) OF THE PUBLIC shall include all persons who are not occupationally associated with the plant. This category does not include employees of the licensee, its contractors, or vendors. Also excluded from this category are persons who enter the site to service equipment or to make deliveries. This category does include persons who use portions of the site for recreational, occupational, or other purposes not associated with the plant.

OFFSITE DOSE CALCULATION MANUAL

1.20 The OFFSITE DOSE CALCULATION MANUAL (ODCM) shall contain the methodology and parameters used in the calculation of offsite doses resulting from radioactive gaseous and liquid effluents, in the calculation of gaseous and liquid effluent monitoring Alarm/Trip Setpoints, and in the conduct of the Environmental Radiological Monitoring Program. The ODCM shall also contain (1) the Radioactive Effluent Controls and Radiological Environmental Monitoring Programs required by Section 6.7.6 and (2) descriptions of the information that should be included in the Annual Radiological Environmental Operating and Annual Radioactive Effluent Release Reports required by Specifications 6.8.1.3 and 6.8.1.4.

OPERABLE - OPERABILITY

1.21 A system, subsystem, train, component or device shall be OPERABLE or have OPERABILITY when it is capable of performing its specified function(s), and when all necessary attendant instrumentation, controls, electrical power, cooling or seal water, lubrication or other auxiliary equipment that are required for the system, subsystem, train, component, or device to perform its function(s) are also capable of performing their related support function(s).

OPERATIONAL MODE - MODE

1.22 An OPERATIONAL MODE (i.e., MODE) shall correspond to any one inclusive combination of core reactivity condition, power level, and average reactor coolant temperature specified in Table 1.2.

PHYSICS TESTS

1.23 PHYSICS TESTS shall be those tests performed to measure the fundamental nuclear characteristics of the reactor core and related instrumentation: (1) described in Chapter 14.0 of the FSAR, (2) authorized under the provisions of 10 CFR 50.59, or (3) otherwise approved by the Commission.

PRESSURE BOUNDARY LEAKAGE

1.24 PRESSURE BOUNDARY LEAKAGE shall be leakage (except steam generator tube leakage) through a nonisolable fault in a Reactor Coolant System component body, pipe wall, or vessel wall.

PROCESS CONTROL PROGRAM

1.25 The PROCESS CONTROL PROGRAM (PCP) shall contain the current formulas, sampling, analyses, tests, and determinations to be made to ensure that processing and packaging of solid radioactive wastes based on demonstrated processing of actual or simulated wet solid wastes will be accomplished in such a way as to assure compliance with 10 CFR Parts 20, 61, and 71, State Regulations, burial ground requirements, and other requirements governing the disposal of solid radioactive waste.

PURGE - PURGING

1.26 PURGE or PURGING shall be any controlled process of discharging air or gas from a confinement to maintain temperature, pressure, humidity, concentration or other operating condition, in such a manner that replacement air or gas is required to purify the confinement.

QUADRANT POWER TILT RATIO

1.27 QUADRANT POWER TILT RATIO shall be the ratio of the maximum upper excore detector calibrated output to the average of the upper excore detector calibrated outputs, or the ratio of the maximum lower excore detector calibrated output to the average of the lower excore detector calibrated outputs, whichever is greater. With one excore detector inoperable, the remaining three detectors shall be used for computing the average.

RATED THERMAL POWER

1.28 RATED THERMAL POWER shall be a total reactor core heat transfer rate to the reactor coolant of 3648 Mwt.

REACTOR TRIP SYSTEM (RTS) RESPONSE TIME

1.29 The RTS RESPONSE TIME shall be the time interval from when the monitored parameter exceeds its RTS Trip Setpoint at the channel sensor until loss of stationary gripper coil voltage. The response time may be measured by means of any series of sequential, overlapping, or total steps so that the entire response time is measured. In lieu of measurement, response time may be verified for selected components provided that the components and methodology for verification have been previously reviewed and approved by the NRC.

REPORTABLE EVENT

1.30 A REPORTABLE EVENT shall be any of those conditions specified in Section 50.73 of 10 CFR Part 50.

CONTAINMENT ENCLOSURE BUILDING INTEGRITY

1.31 CONTAINMENT ENCLOSURE BUILDING INTEGRITY shall exist when:

a. Each door in each access opening is closed except when the access opening is being used for normal transit entry and exit,

b. The Containment Enclosure Emergency Air Cleanup System is OPERABLE, and

c. The sealing mechanism associated with each penetration (e.g., welds, bellows, or 0-rings) is OPERABLE.

SHUTDOWN MARGIN

1.32 SHUTDOWN MARGIN shall be the instantaneous amount of reactivity by which the reactor is subcritical or would be subcritical from its present condition assuming all full-length rod cluster assemblies (shutdown and control) are fully inserted except for the single rod cluster assembly of highest reactivity worth which is assumed to be fully withdrawn.

SITE BOUNDARY

1.33 The SITE BOUNDARY shall be that line beyond which the land is neither owned, nor leased, nor otherwise controlled by the licensee.

SLAVE RELAY TEST

1.34 A SLAVE RELAY TEST shall be the energization of each slave relay and verification of OPERABILITY of each relay. The SLAVE RELAY TEST shall include a continuity check, as a minimum, of associated testable actuation devices.

1.35 (NOT USED)

SOURCE CHECK

1.36 A SOURCE CHECK shall be the qualitative assessement of channel response when the channel sensor is exposed to a source of increased radioactivity.

STAGGERED TEST BASIS

1.37 A STAGGERED TEST BASIS shall consist of:

a. A test schedule for n systems, subsystems, trains, or other designated components obtained by dividing the specified test interval into n equal subintervals, and

b. The testing of one system, subsystem, train, or other designated component at the beginning of each subinterval.

THERMAL POWER

1.38 THERMAL POWER shall be the total reactor core heat transfer rate to the reactor coolant.

TRIP ACTUATING DEVICE OPERATIONAL TEST

1.39 A TRIP ACTUATING DEVICE OPERATIONAL TEST shall consist of operating the Trip Actuating Device and verifying OPERABILITY of alarm, interlock and/or trip functions. The TRIP ACTUATING DEVICE OPERATIONAL TEST shall include adjustment, as necessary, of the Trip Actuating Device such that it actuates at the required Setpoint within the required accuracy.

UNIDENTIFIED LEAKAGE

1.40 UNIDENTIFIED LEAKAGE shall be all leakage which is not IDENTIFIED LEAKAGE or CONTROLLED LEAKAGE.

UNRESTRICTED AREA

1.41 An UNRESTRICTED AREA shall be any area at or beyond the SITE BOUNDARY access to which is not controlled by the licensee for purposes of protection of individuals from exposure to radiation and radioactive materials, or any area within the SITE BOUNDARY used for residential quarters or for industrial, commercial, institutional, and/or recreational purposes.

1.42 (NOT USED)

VENTING

1.43 VENTING shall be the controlled process of discharging air or gas from a confinement to maintain temperature, pressure, humidity, concentration, or other operating condition, in such a manner that replacement air or gas is not provided or required during VENTING. Vent, used in system names, does not imply a VENTING process.

TABLE 1.1

FREQUENCY NOTATION

NOTATION	FREQUENCY
S	At least once per 12 hours.
D	At least once per 24 hours.
W	At least once per 7 days.
M	At least once per 31 days.
Q	At least once per 92 days.
SA	At least once per 184 days.
R	At least once per 18 months.
S/U	Prior to each reactor startup.
N.A.	Not applicable.
P	Completed prior to each release.

TABLE 1.2

OPERATIONAL MODES

MODE	REACTIVITY CONDITION, k_{eff}	% RATED THERMAL POWER*	AVERAGE COOLANT TEMPERATURE
1. POWER OPERATION	≥ 0.99	> 5%	$\geq 350°F$
2. STARTUP	≥ 0.99	$\leq 5\%$	$\geq 350°F$
3. HOT STANDBY	< 0.99	0	$\geq 350°F$
4. HOT SHUTDOWN	< 0.99	0	$350°F > T_{avg} > 200°F$
5. COLD SHUTDOWN	< 0.99	0	$\leq 200°F$
6. REFUELING**	≤ 0.95	0	$\leq 140°F$

*Excluding decay heat.

**Fuel in the reactor vessel with the vessel head closure bolts less than fully tensioned or with the head removed.

SECTION 2.0

SAFETY LIMITS

AND

LIMITING SAFETY SYSTEM SETTINGS

2.0 SAFETY LIMITS AND LIMITING SAFETY SYSTEM SETTINGS

2.1 SAFETY LIMITS (SLs)

2.1.1 REACTOR CORE SLs

In MODES 1 and 2, the combination of THERMAL POWER, Reactor Coolant System (RCS) highest loop average temperature, and pressurizer pressure shall not exceed the limits specified in the COLR; and the following SLs shall not be exceeded:

2.1.1.1 The departure from nucleate boiling ratio (DNBR) shall be maintained greater than or equal to 1.14 for the WRB-2M DNB correlation.

2.1.1.2 The peak fuel centerline temperature shall be maintained less than 5080°F, decreasing by 58°F per 10,000 MWD/MTU of burnup.

2.1.2 REACTOR COOLANT SYSTEM PRESSURE SL

In MODES 1, 2, 3, 4, and 5, the RCS pressure shall be maintained less than or equal to 2735 psig.

2.1.3 SAFETY LIMIT VIOLATIONS

2.1.3.1 If SL 2.1.1 is violated, restore compliance and be in MODE 3 within 1 hour.

2.1.3.2 If SL 2.1.2 is violated:

a. In MODE 1 or 2, restore compliance and be in MODE 3 within 1 hour.

b. In MODE 3, 4, or 5, restore compliance within 5 minutes.

Figure 2.1-1 (THIS FIGURE IS NOT USED)

2.2 LIMITING SAFETY SYSTEM SETTINGS

REACTOR TRIP SYSTEM INSTRUMENTATION SETPOINTS

2.2.1 The Reactor Trip System Instrumentation and Interlock Setpoints shall be set consistent with the Trip Setpoint values shown in Table 2.2-1.

APPLICABILITY: As shown for each channel in Table 3.3-1.

ACTION:

a. With a Reactor Trip System Instrumentation or Interlock Setpoint less conservative than the value shown in the Trip Setpoint column but more conservative than the value shown in the Allowable Value column of Table 2.2-1, adjust the Setpoint consistent with the Trip Setpoint value.

b. With the Reactor Trip System Instrumentation or Interlock Setpoint less conservative than the value shown in the Allowable Value column of Table 2.2-1, either:

1. Adjust the Setpoint consistent with the Trip Setpoint value of Table 2.2-1 and determine within 12 hours that Equation 2.2-1 was satisfied for the affected channel, or

2. Declare the channel inoperable and apply the applicable ACTION statement requirement of Specification 3.3.1 until the channel is restored to OPERABLE status with its Setpoint adjusted consistent with the Trip Setpoint value.

Equation 2.2-1 $Z + R + S \leq TA$

Where:

Z = The value from Column Z of Table 2.2-1 for the affected channel,

R = The "as measured" value (in percent span) of rack error for the affected channel,

S = Either the "as measured" value (in percent span) of the sensor error, or the value from Column S (Sensor Error) of Table 2.2-1 for the affected channel, and

TA = The value from Column TA (Total Allowance) of Table 2.2-1 for the affected channel.

TABLE 2.2-1

REACTOR TRIP SYSTEM INSTRUMENTATION TRIP SETPOINTS

FUNCTIONAL UNIT	TOTAL ALLOWANCE (TA)	Z	SENSOR ERROR (S)	TRIP SETPOINT	ALLOWABLE VALUE
1. Manual Reactor Trip	N.A.	N.A.	N.A.	N.A.	N.A.
2. Power Range, Neutron Flux					
a. High Setpoint	7.5	4.56	1.42	≤109% of RTP*	≤111.1% of RTP*
b. Low Setpoint	8.3	4.56	1.42	≤25% of RTP*	≤27.1% of RTP*
3. Power Range, Neutron Flux, High Positive Rate	1.6	0.5	0	≤5% of RTP* with a time constant ≥2 seconds	≤6.3% of RTP* with a time constant ≥2 seconds
4. (NOT USED)					
5. Intermediate Range, Neutron Flux	17.0	8.41	0	≤25% of RTP*	≤31.1% of RTP*
6. Source Range, Neutron Flux	17.0	10.01	0	$\leq 10^5$ cps	$\leq 1.6 \times 10^5$ cps
7. Overtemperature ΔT	N.A.	N.A.	N.A.	See Note 1	See Note 2
8. Overpower ΔT	N.A.	N.A.	N.A.	See Note 3	See Note 4
9. Pressurizer Pressure - Low	N.A.	N.A.	N.A.	≥1945 psig	≥1,933 psig
10. Pressurizer Pressure - High	N.A.	N.A.	N.A.	≤2385 psig	≤2,397 psig

*RTP = RATED THERMAL POWER

TABLE 2.2-1 (continued)

REACTOR TRIP SYSTEM INSTRUMENTATION TRIP SETPOINTS

FUNCTIONAL UNIT	TOTAL ALLOWANCE (TA)	Z	SENSOR ERROR (S)	TRIP SETPOINT	ALLOWABLE VALUE
11. Pressurizer Water Level - High	8.0	4.20	0.84	≤92% of instrument span	≤93.75% of instrument span
12. Reactor Coolant Flow - Low	N.A.	N.A.	N.A.	≥90% of indicated loop flow	≥89.6% of indicated loop flow
13. Steam Generator Water Level Low - Low	N.A.	N.A.	N.A.	≥20.0% of narrow range instrument span	≥19.5% of narrow range instrument span
14. Undervoltage - Reactor Coolant Pumps	15.0	1.39	0	≥10,200 volts	≥9,822 volts
15. Underfrequency - Reactor Coolant Pumps	2.9	0	0	≥55.5 Hz	≥55.3 Hz
16. Turbine Trip					
a. Low Fluid Oil Pressure	N.A.	N.A.	N.A.	≥500 psig	≥450 psig
b. Turbine Stop Valve Closure	N.A.	N.A.	N.A.	≥1% open	≥1% open
17. Safety Injection Input from ESF	N.A.	N.A.	N.A.	N.A.	N.A.

TABLE 2.2-1 (continued)

REACTOR TRIP SYSTEM INSTRUMENTATION TRIP SETPOINTS

FUNCTIONAL UNIT	TOTAL ALLOWANCE (TA)	Z	SENSOR ERROR (S)	TRIP SETPOINT	ALLOWABLE VALUE
18. Reactor Trip System Interlocks					
a. Intermediate Range Neutron Flux, P-6	N.A.	N.A.	N.A.	$\geq 1 \times 10^{-10}$ amp	$\geq 6 \times 10^{-11}$ amp
b. Low Power Reactor Trips Block, P-7					
1) P-10 input	N.A.	N.A.	N.A.	≤10% of RTP*	≤12.1% of RTP*
2) P-13 input	N.A.	N.A.	N.A.	≤10% RTP* Turbine Impulse Pressure Equivalent	≤12.3% of RTP* Turbine Impulse Pressure Equivalent
c. Power Range Neutron Flux, P-8	N.A.	N.A.	N.A.	≤50% of RTP*	≤52.1% of RTP*
d. Power Range Neutron Flux, P-9	N.A.	N.A.	N.A.	≤20% of RTP*	≤22.1% of RTP*
e. Power Range Neutron Flux, P-10	N.A.	N.A.	N.A.	≥10% of RTP*	≥7.9% of RTP*
f. Turbine Impulse Chamber Pressure, P-13	N.A.	N.A.	N.A.	≤10% RTP* Turbine Impulse Pressure Equivalent	≤12.3% RTP* Turbine Impulse Pressure Equivalent
19. Reactor Trip Breakers	N.A.	N.A.	N.A.	N.A.	N.A.
20. Automatic Trip and Interlock Logic	N.A.	N.A.	N.A.	N.A.	N.A.

*RTP = RATED THERMAL POWER

TABLE 2.2-1 (Continued)

TABLE NOTATIONS

NOTE 1: OVERTEMPERATURE ΔT

$$\Delta T \frac{(1+\tau_1 S)}{(1+\tau_2 S)} \frac{(1)}{(1+\tau_3 S)} \leq \Delta T_0 \{K_1 - K_2 \frac{(1+\tau_4 S)}{(1+\tau_5 S)} [T \frac{(1)}{(1+\tau_6 S)} - T'] + K_3(P - P') - f_1(\Delta I)\}$$

Where: ΔT = Measured RCS ΔT by RTD Instrumentation, °F;

$\frac{1+\tau_1 S}{1+\tau_2 S}$ = Lead-lag compensator on measured ΔT;

τ_1, τ_2 = Time constants utilized in lead-lag compensator for ΔT, values specified in the COLR;

$\frac{1}{1+\tau_3 S}$ = Lag compensator on measured ΔT;

τ_3 = Time constants utilized in the lag compensator for ΔT, value specified in the COLR;

ΔT_0 = Indicated ΔT at RATED THERMAL POWER, °F;

K_1 = Value specified in the COLR;

K_2 = Value specified in the COLR;

$\frac{1+\tau_4 S}{1+\tau_5 S}$ = The function generated by the lead-lag compensator for T_{avg} dynamic compensation;

τ_4, τ_5 = Time constants utilized in lead-lag compensator for T_{avg}, values specified in the COLR;

T = Measured RCS Average temperature, °F;

$\frac{1}{1+\tau_6 S}$ = Lag compensator on measured T_{avg};

τ_6 = Time constant utilized in the measured T_{avg} lag compensator, value specified in the COLR;

TABLE 2.2-1 (Continued)

TABLE NOTATIONS

NOTE 1: (Continued)

T' Indicated RCS T_{avg} at RATED THERMAL POWER, °F, (Calibration temperature for ΔT instrumentation, value specified in the COLR);

K_3 = Value specified in COLR;

P = Measured Pressurizer pressure, psig;

P' = Nominal RCS operating pressure, psig, value specified in the COLR;

S = Laplace transform operator, s^{-1};

and $f_1(\Delta I)$ is a function of the indicated difference between top and bottom detectors of the power-range neutron ion chambers as specified in the COLR.

NOTE 2: Cycle dependent values for the channel's Allowable Value are specified in the COLR.

TABLE 2.2-1 (Continued)

TABLE NOTATIONS (Continued)

NOTE 3: OVERPOWER ΔT

$$\Delta T \frac{(1+\tau_1 S)}{(1+\tau_2 S)} \frac{(1)}{(1+\tau_3 S)} \leq \Delta T_0 \{K_4 - K_5 \frac{(\tau_7 S)}{(1+\tau_7 S)} \frac{(1)}{(1+\tau_6 S)} T - K_6 [T \frac{(1)}{(1+\tau_6 S)} - T''] - f_2(\Delta I)\}$$

Where: ΔT = As defined in Note 1,

$\frac{1+\tau_1 S}{1+\tau_2 S}$ = As defined in Note 1,

τ_1, τ_2 = As defined in Note 1,

$\frac{1}{1+\tau_3 S}$ = As defined in Note 1,

τ_3 = As defined in Note 1,

ΔT_0 = As defined in Note 1,

K_4 = Value specified in the COLR,

K_5 = Value specified in the COLR,

$\frac{\tau_7 S}{1+\tau_7 S}$ = The function generated by the rate-lag compensator for T_{avg} dynamic compensation,

τ_7 = Time constants utilized in rate-lag compensator for T_{avg}, value specified in the COLR,

$\frac{1}{1+\tau_6 S}$ = As defined in Note 1,

τ_6 = As defined in Note 1,

TABLE 2.2-1 (Continued)

TABLE NOTATIONS (Continued)

NOTE 3: (Continued)

K_6 = Value specified in COLR,

T = As defined in Note 1,

T'' = Indicated T_{avg} at RATED THERMAL POWER, °F, (Calibration temperature for ΔT instrumentation, value specified in the COLR),

S = As defined in Note 1, and

$f_2(\Delta I)$ = A function of the indicated difference between the top and bottom detectors of the power-range neutron ion chambers as specified in the COLR.

NOTE 4: Cycle dependent values for the channel's Allowable Value are specified in the COLR.

BASES FOR SECTION 2.0

SAFETY LIMITS

AND

LIMITING SAFETY SYSTEM SETTINGS

NOTE

The BASES contained in succeeding pages summarize the reasons for the Specifications in Section 2.0, but in accordance with 10 CFR 50.36 are not part of these Technical Specifications.

INDEX

2.0 BASES

SECTION PAGE

2.1 SAFETY LIMITS

2.1.1 REACTOR CORE..... B 2-1
2.1.2 REACTOR COOLANT SYSTEM PRESSURE..... B 2-2

2.2 LIMITING SAFETY SYSTEM SETTINGS

2.2.1 REACTOR TRIP SYSTEM INSTRUMENTATION SETPOINTS..... B 2-3

2.1.1 Reactor Core SLs

BACKGROUND

GDC 10 (Ref. 1) requires that specified acceptable fuel design limits are not exceeded during steady state operation, normal operational transients, and anticipated operational occurrences (AOOs). This is accomplished by having a departure from nucleate boiling (DNB) design basis, which corresponds to a 95% probability at a 95% confidence level (the 95/95 DNB criterion) that DNB will not occur and by requiring that fuel centerline temperature stays below the melting temperature.

The restrictions of this SL prevent overheating of the fuel and cladding, as well as possible cladding perforation, that would result in the release of fission products to the reactor coolant. Overheating of the fuel is prevented by maintaining the steady peak linear heat rate (LHR) below the level at which fuel centerline melting occurs. Overheating of the fuel cladding is prevented by restricting fuel operation to within the nucleate boiling regime, where the heat transfer coefficient is large and the cladding surface temperature is slightly above the coolant saturation temperature.

Fuel centerline melting occurs when the local LHR, or power peaking, in a region of the fuel is high enough to cause the fuel centerline temperature to reach the melting point of the fuel. Expansion of the pellet upon centerline melting may cause the pellet to stress the cladding to the point of failure, allowing an uncontrolled release of activity to the reactor coolant.

Operation above the boundary of the nucleate boiling regime could result in excessive cladding temperature because of the onset of DNB and the resultant sharp reduction in heat transfer coefficient. Inside the steam film, high cladding temperatures are reached, and a cladding water (zirconium water) reaction may take place. This chemical reaction results in oxidation of the fuel cladding to a structurally weaker form. This weaker form may lose its integrity, resulting in an uncontrolled release of activity to the reactor coolant.

The proper functioning of the Reactor Protection System (RPS) and steam generator safety valves prevents violation of the reactor core SLs.

APPLICABLE SAFETY ANALYSES

The fuel cladding must not sustain damage as a result of normal operation and AOOs. The reactor core SLs are established to preclude violation of the following fuel design criteria:

a. There must be at least 95% probability at a 95% confidence level (the 95/95 DNB criterion) that the hot fuel rod in the core does not experience DNB and

b. The hot fuel pellet in the core must not experience centerline fuel melting.

The Reactor Trip System setpoints (Ref. 2), in combination with all the LCOs, are designed to prevent any anticipated combination of transient conditions for Reactor Coolant System (RCS) temperature, pressure, RCS Flow, ΔI, and THERMAL POWER level that would result in a departure from nucleate boiling ratio (DNBR) of less than the DNBR limit and preclude the existence of flow instabilities.

Automatic enforcement of these reactor core SLs is provided by the appropriate operation of the RPS and the steam generator safety valves.

2.1.1 Reactor Core SLs (continued)

The SLs represent a design requirement for establishing the RPS trip setpoints identified previously. Specification 3/4.2.5, "DNB Parameters," or the assumed initial conditions of the safety analyses (as indicated in the UFSAR, Ref. 2) provide more restrictive limits to ensure that the SLs are not exceeded.

SAFETY LIMITS

The figure provided in the COLR shows the loci of points of THERMAL POWER, RCS pressure, and average temperature for which the minimum DNBR is not less than the safety analyses limit, that fuel centerline temperature remains below melting, that the average enthalpy in the hot leg is less than or equal to the enthalpy of saturated liquid, or that the exit quality is within the limits defined by the DNBR correlation.

The reactor core SLs are established to preclude violation of the following fuel design criteria:

a. There must be at least a 95% probability at a 95% confidence level (the 95/95 DNB criterion) that the hot fuel rod in the core does not experience DNB and

b. There must be at least a 95% probability at a 95% confidence level that the hot fuel pellet in the core does not experience centerline fuel melting.

The reactor core SLs are used to define the various RPS functions such that the above criteria are satisfied during steady state operation, normal operational transients, and anticipated operational occurrences (AOOs). To ensure that the RPS precludes the violation of the above criteria, additional criteria are applied to the Overtemperature and Overpower ΔT reactor trip functions. That is, it must be demonstrated that the average enthalpy in the hot leg is less than or equal to the saturation enthalpy and the core exit quality is within the limits defined by the DNBR correlation. Appropriate functioning of the RPS ensures that for variations in the THERMAL POWER, RCS Pressure, RCS average temperature, RCS flow rate, and ΔI that the reactor core SLs will be satisfied during steady state operation, normal operational transients, and AOOs.

APPLICABILITY

SL 2.1.1 only applies in MODES 1 and 2 because these are the only MODES in which the reactor is critical. Automatic protection functions are required to be OPERABLE during MODES 1 and 2 to ensure operation within the reactor core SLs. The steam generator safety valves or automatic protection actions serve to prevent RCS heatup to the reactor core SL conditions or to initiate a reactor trip function, which forces the unit into MODE 3. Setpoints for the reactor trip functions are specified in Specification 3/4.3.1, "Reactor Trip System (RTS) Instrumentation." In MODES 3, 4, 5, and 6, Applicability is not required since the reactor is not generating significant THERMAL POWER.

2.1.2 Reactor Coolant System (RCS) Pressure SL

BACKGROUND

The SL on RCS pressure protects the integrity of the RCS against overpressurization. In the event of fuel cladding failure, fission products are released into the reactor coolant. The RCS then serves as the primary barrier in preventing the release of fission products into the atmosphere. By establishing an upper limit on RCS pressure, the continued integrity of the RCS is ensured. According to 10 CFR 50, Appendix A, GDC 14, "Reactor Coolant Pressure Boundary," and GDC 15, "Reactor Coolant System Design" (Ref. 3), the reactor pressure coolant boundary (RCPB) design conditions are not to be exceeded during normal operation and anticipated operational occurrences (AOOs). Also, in accordance with GDC 28, "Reactivity Limits" (Ref. 3), reactivity accidents, including rod ejection, do not result in damage to the RCPB greater than limited local yielding.

The design pressure of the RCS is 2500 psia. During normal operation and AOOs, RCS pressure is limited from exceeding the design pressure by more than 10%, in accordance with Section III of the ASME Code (Ref. 4). To ensure system integrity, all RCS components are hydrostatically tested at 125% of design pressure, according to the ASME Code requirements prior to initial operation when there is no fuel in the core. Following inception of unit operation, RCS components shall be pressure tested, in accordance with the requirements of ASME Code, Section XI (Ref. 5).

Overpressurization of the RCS could result in a breach of the RCPB. If such a breach occurs in conjunction with a fuel cladding failure, fission products could enter the containment atmosphere, raising concerns relative to limits on radioactive releases specified in 10 CFR 100, "Reactor Site Criteria" (Ref. 6).

APPLICABLE SAFETY ANALYSES

The RCS pressurizer safety valves, the main steam safety valves (MSSVs), and the reactor high pressure trip have settings established to ensure that the RCS pressure SL will not be exceeded.

The RCS pressurizer safety valves are sized to prevent system pressure from exceeding the design pressure by more than 10%, as specified in Section III of the ASME Code for Nuclear Power Plant Components (Ref. 3). The transient that establishes the required relief capacity, and hence valve size requirements and lift settings, is a complete loss of external load without a direct reactor trip. During the transient, no control actions are assumed, except that the safety valves on the secondary plant are assumed to open when the steam pressure reaches the secondary plant safety valve settings, and nominal feedwater supply is maintained.

The Reactor Trip System setpoints (Ref. 2), together with the settings of the MSSVs, provide pressure protection for normal operation and AOOs. The reactor high pressure trip setpoint is specifically set to provide protection against overpressurization (Ref. 2). The safety analyses for both the high pressure trip and the RCS pressurizer safety valves are performed using conservative assumptions relative to pressure control devices.

2.1.2 Reactor Coolant System (RCS) Pressure SL (continued)

More specifically, no credit is taken for operation of any of the following:

a. Pressurizer power operated relief valves (PORVs),

b. Steam line relief valve,

c. Steam Dump System,

d. Reactor Control System,

e. Pressurizer Level Control System, or

f. Pressurizer spray valve.

SAFETY LIMITS

The maximum transient pressure allowed in the RCS pressure vessel under the ASME Code, Section III, is 110% of design pressure. The maximum transient pressure allowed in the RCS piping, valves, and fittings under USAS, Section B31.1 (Ref. 7) is 120% of design pressure. The most limiting of these two allowances is the 110% of design pressure; therefore, the SL on maximum allowable RCS pressure is 2735 psig.

APPLICABILITY

SL 2.1.2 applies in MODES 1, 2, 3, 4, and 5 because this SL could be approached or exceeded in these MODES due to overpressurization events. The SL is not applicable in MODE 6 because the reactor vessel head closure bolts are not fully tightened, making it unlikely that the RCS can be pressurized.

2.1.3 SAFETY LIMIT VIOLATIONS

The following SL violation responses are applicable:

If the reactor core SL 2.1.1 is violated, the requirement to go to MODE 3 places the unit in a MODE in which this SL is not applicable. The Allowed Outage Time (Completion Time) of 1 hour recognizes the importance of bringing the unit to a MODE of operation where this SL is not applicable, and reduces the probability of fuel damage.

If the RCS pressure SL is violated when the reactor is in MODE 1 or 2, the requirement is to restore compliance and be in MODE 3 within 1 hour. Exceeding the RCS pressure SL may cause immediate RCS failure and create a potential for radioactive releases in excess of 10 CFR 100, "Reactor Site Criteria," limits (Ref. 6). The Allowed Outage Time (Completion Time) of 1 hour recognizes the importance of reducing power level to a MODE of operation where the potential for challenges to safety systems is minimized.

SAFETY LIMIT VIOLATIONS (continued)

If the RCS pressure SL is exceeded in MODE 3, 4, or 5, RCS pressure must be restored to within the SL value within 5 minutes. Exceeding the RCS pressure SL in MODE 3, 4, or 5 is more severe than exceeding this SL in MODE 1 or 2, since the reactor vessel temperature may be lower and the vessel material, consequently, less ductile. As such, pressure must be reduced to less than the SL within 5 minutes. The action does not require reducing MODES, since this would require reducing temperature, which would compound the problem by adding thermal gradient stresses to the existing pressure stress.

REFERENCES

1. 10 CFR 50, Appendix A, GDC 10.
2. UFSAR, Chapters 7 and 15.
3. 10 CFR 50, Appendix A, GDC 14, GDC 15, and GDC 28.
4. ASME, Boiler and Pressure Vessel Code, Section III, Article NB-7000.
5. ASME, Boiler and Pressure Vessel Code, Section XI, Article IWX-5000.
6. 10 CFR 100.
7. USBS B31.1, Standard Code for Pressure Piping, American Society of Mechanical Engineers, 1967.

BASES

2.2.1 REACTOR TRIP SYSTEM INSTRUMENTATION SETPOINTS

The Reactor Trip Setpoint Limits specified in Table 2.2-1 are the nominal values at which the Reactor trips are set for each functional unit. The Trip Setpoints have been selected to ensure that the core and Reactor Coolant System are prevented from exceeding their safety limits during normal operation and design-basis anticipated operational occurrences and to assist the Engineered Safety Features Actuation System in mitigating the consequences of accidents. The Setpoint for a Reactor Trip System or interlock function is considered to be adjusted consistent with the nominal value when the "as-measured" Setpoint is within the band allowed for rack calibration accuracy and bistable setting accuracy. This setpoint methodology may result in the "as measured" trip setpoint exceeding the trip setpoint listed in the Technical Specifications. For example, a bistable with a trip setpoint of $\leq$ 109% has a span of 120%, a rack calibration accuracy of $\pm$ 0.50%, and a bistable setting accuracy of $\pm$ 0.25%. The bistable is considered to be adjusted to the trip setpoint, consistent with the Technical Specifications, as long as the "as measured" value for the bistable is $\leq$ 109% + [(0.5 + 0.25) (120%) / 100)], or $\leq$ 109.9%.

To accommodate the instrument drift assumed to occur between operational tests and the accuracy to which Setpoints can be measured and calibrated, Allowable Values for the Reactor Trip Setpoints have been specified in Table 2.2-1. Operation with Setpoints less conservative than the Trip Setpoint but within the Allowable Value is acceptable, since an allowance has been made in the safety analysis to accommodate this error. An optional provision has been included for determining the OPERABILITY of a channel when its Trip Setpoint is found to exceed the Allowable Value. The methodology of this option utilizes the "as-measured" deviation from the specified calibration point for rack and sensor components in conjunction with a statistical combination of the other uncertainties of the instrumentation to measure the process variable and the uncertainties in calibrating the instrumentation. In Equation 2.2-1, $Z + R + S \leq TA$, the interactive effects of the errors in the rack and the sensor, and the "as measured" values of the errors are considered. Z, as specified in Table 2.2-1, in percent span, is the statistical summation of errors assumed in the analysis excluding those associated with the sensor and rack drift and the accuracy of their measurement. TA or Total Allowance is the difference, in percent span, between the Trip Setpoint and the value used in the analysis for Reactor trip. R or Rack Error is the "as-measured" deviation, in percent span, for the affected channel from the specified Trip Setpoint. S or Sensor Error is either the "as-measured" deviation of the sensor from its calibration point or the value specified in Table 2.2-1, in percent span, from the analysis assumptions. Use of Equation 2.2-1 allows for a sensor drift factor, an increased rack drift factor, and provides a threshold value for REPORTABLE EVENTS.

2.2.1 REACTOR TRIP SYSTEM INSTRUMENTATION SETPOINTS (Continued)

The methodology to derive the Trip Setpoints is based on combining all of the uncertainties in the channels. Inherent to the determination of the Trip Setpoints are the magnitudes of these channel uncertainties. Sensors and other instrumentation utilized in these channels are expected to be capable of operating within the allowances of these uncertainty magnitudes. Rack drift in excess of the Allowable Value exhibits the behavior that the rack has not met its allowance. Being that there is a small statistical chance that this will happen, an infrequent excessive drift is expected. Rack or sensor drift, in excess of the allowance that is more than occasional, may be indicative of more serious problems and should warrant further investigation.

2.2.1 REACTOR TRIP SYSTEM INSTRUMENTATION SETPOINTS (Continued)

The various Reactor trip circuits automatically open the Reactor trip breakers whenever a condition monitored by the Reactor Trip System reaches a preset or calculated level. In addition to redundant channels and trains, the design approach provides a Reactor Trip System which monitors numerous system variables, therefore providing Trip System functional diversity. The functional capability at the specified trip setting is required for those anticipatory or diverse Reactor trips for which no direct credit was assumed in the safety analysis to enhance the overall reliability of the Reactor Trip System. The Reactor Trip System initiates a Turbine trip signal whenever Reactor trip is initiated. This prevents the reactivity insertion that would otherwise result from excessive Reactor Coolant System cooldown and thus avoids unnecessary actuation of the Engineered Safety Features Actuation System.

Manual Reactor Trip

The Reactor Trip System includes manual Reactor trip capability.

Power Range, Neutron Flux

In each of the Power Range Neutron Flux channels there are two independent bistables, each with its own trip setting used for a High and Low Range trip setting. The Low Setpoint trip provides protection during subcritical and low power operations to mitigate the consequences of a power excursion beginning from low power, and the High Setpoint trip provides protection during power operations to mitigate the consequences of a reactivity excursion from all power levels.

The Low Setpoint trip may be manually blocked above P-10 (a power level of approximately 10% of RATED THERMAL POWER) and is automatically reinstated below the P-10 Setpoint.

Power Range, Neutron Flux, High Positive Rate

The Power Range High Positive Rate trip provides protection against rapid flux increases which are characteristic of a rupture of a control rod drive housing. Specifically, this trip complements the Power Range Neutron Flux High and Low trips to ensure that the criteria are met for rod ejection from mid-power.

2.2.1 REACTOR TRIP SYSTEM INSTRUMENTATION SETPOINTS (Continued)

Intermediate and Source Range, Neutron Flux

The Intermediate and Source Range, Neutron Flux trips provide core protection during reactor startup to mitigate the consequences of an uncontrolled rod cluster control assembly bank withdrawal from a subcritical condition. These trips provide redundant protection to the Low Setpoint trip of the Power Range, Neutron Flux channels. The Source Range channels will initiate a Reactor trip at about 10^5 counts per second unless manually blocked when P-6 becomes active. The Intermediate Range channels will initiate a Reactor trip at a current level equivalent to approximately 25% of RATED THERMAL POWER unless manually blocked when P-10 becomes active.

Overtemperature ΔT

The Overtemperature ΔT trip provides core protection to prevent DNB for all combinations of pressure, power, coolant temperature, and axial power distribution, provided that the transient is slow with respect to piping transit delays from the core to the temperature detectors (about 4 seconds), pressure is within the range between the Pressurizer High and Low Pressure trips and power is less than the Overpower ΔT trip setpoint. The Setpoint is automatically varied with: (1) coolant temperature to correct for temperature induced changes in density and heat capacity of water and includes dynamic compensation for piping delays from the core to the loop temperature detectors, (2) pressurizer pressure, and (3) axial power distribution. With normal axial power distribution, this Reactor trip limit is always below the core Safety Limit as shown in COLR. If axial peaks are greater than design, as indicated by the difference between top and bottom power range nuclear detectors, the Reactor trip is automatically reduced according to the notations in Table 2.2-1.

Overpower ΔT

The Overpower ΔT trip provides assurance of fuel integrity (e.g., no fuel pellet melting and less than 1% cladding strain) under all possible overpower conditions, limits the required range for Overtemperature ΔT trip, and provides a backup to the High Neutron Flux trip. The Setpoint is automatically varied with: (1) coolant temperature to correct for temperature induced changes in density and heat capacity of water, (2) rate of change of temperature for dynamic compensation for piping delays from the core to the loop temperature detectors, and (3) axial power distribution to ensure that the allowable heat generation rate (Kw/ft) is not exceeded. The Overpower ΔT trip provides protection to mitigate the consequences of various size steam breaks as reported in WCAP-9226, "Reactor Core Response to Excessive Secondary Steam Releases."

2.2.1 REACTOR TRIP SYSTEM INSTRUMENTATION SETPOINTS (Continued)

Pressurizer Pressure

In each of the pressurizer pressure channels, there are two independent bistables, each with its own trip setting to provide for a High and Low Pressure trip, thus limiting the pressure range in which reactor operation is permitted. The Low Setpoint trip protects against low pressure that could lead to DNB by tripping the reactor in the event of a loss of reactor coolant pressure.

On decreasing power the Low Setpoint trip is automatically blocked by P-7 (a power level of approximately 10% of RATED THERMAL POWER with turbine impulse chamber pressure at approximately 10% of full power equivalent); and on increasing power, automatically reinstated by P-7.

The High Setpoint trip functions in conjunction with the pressurizer relief and safety valves to protect the Reactor Coolant System against system overpressure.

Pressurizer Water Level

The Pressurizer High Water Level trip is provided to prevent water relief through the pressurizer safety valves. On decreasing power, the Pressurizer High Water Level trip is automatically blocked by P-7 (a power level of approximately 10% of RATED THERMAL POWER with a turbine impulse chamber pressure at approximately 10% of full-power equivalent); and on increasing power, the Pressurizer High Water Level trip is automatically reinstated by P-7.

Reactor Coolant Flow

The Low Reactor Coolant Flow trips provide core protection to prevent DNB by mitigating the consequences of a loss of flow resulting from the loss of one or more reactor coolant pumps.

On increasing power above P-7 (a power level of approximately 10% of RATED THERMAL POWER or a turbine impulse chamber pressure at approximately 10% of full power equivalent), an automatic Reactor trip will occur if the flow in more than one loop drops below 90% of indicated loop flow. Above P-8 (a power level of approximately 50% of RATED THERMAL POWER),an automatic Reactor trip will occur if the flow in any single loop drops below 90% of indicated loop flow. Conversely, on decreasing power between P-8 and the P-7, an automatic Reactor trip will occur on low reactor coolant flow in more than one loop and below P-7 the trip function is automatically blocked.

Steam Generator Water Level

The Steam Generator Water Level Low-Low trip protects the reactor from loss of heat sink in the event of a sustained steam/feedwater flow mismatch resulting from loss of normal feedwater. The specified Setpoint provides allowances for starting delays of the Emergency Feedwater System.

2.2.1 REACTOR TRIP SYSTEM INSTRUMENTATION SETPOINTS (Continued)

Undervoltage and Underfrequency - Reactor Coolant Pump Busses

The Undervoltage and Underfrequency Reactor Coolant Pump Bus trips provide core protection against DNB as a result of complete loss of forced coolant flow. The specified Setpoints assure a Reactor trip signal is generated before the Low Flow Trip Setpoint is reached. Time delays are incorporated in the Underfrequency and Undervoltage trips to prevent spurious Reactor trips from momentary electrical power transients. For undervoltage, the delay is set so that the time required for a signal to reach the Reactor trip breakers following the simultaneous trip of two or more reactor coolant pump bus circuit breakers shall not exceed 1.5 seconds. For underfrequency, the delay is set so that the time required for a signal to reach the Reactor trip breakers after the Underfrequency Trip Setpoint is reached shall not exceed 0.6 second. On decreasing power the Undervoltage and Underfrequency Reactor Coolant Pump Bus trips are automatically blocked by P-7 (a power level of approximately 10% of RATED THERMAL POWER with a turbine impulse chamber pressure at approximately 10% of full power equivalent); and on increasing power, the Undervoltage and Underfrequency Reactor Coolant Pump Bus trips are reinstated automatically by P-7.

Turbine Trip

A Turbine trip initiates a Reactor trip. On decreasing power, the Reactor trip from the Turbine trip is automatically blocked by P-9 (a power level of approximately 20% of RATED THERMAL POWER); and on increasing power, the Reactor trip from the Turbine trip is reinstated automatically by P-9.

Safety Injection Input from ESF

If a Reactor trip has not already been generated by the Reactor Trip System instrumentation, the ESF automatic actuation logic channels will initiate a Reactor trip upon any signal which initiates a Safety Injection. The ESF instrumentation channels that initiate a Safety Injection signal are shown in Table 3.3-3.

Reactor Trip System Interlocks

The Reactor Trip System interlocks perform the following functions:

P-6 On increasing power, P-6 allows the manual block of the Source Range trip (i.e., prevents premature block of Source Range trip). On decreasing power, Source Range Level trips are automatically reactivated and high voltage is restored.

2.2.1 REACTOR TRIP SYSTEM INSTRUMENTATION SETPOINTS (Continued)

Reactor Trip System Interlocks (Continued)

P-7 On increasing power, P-7 automatically enables Reactor trips on low flow in more than one reactor coolant loop, reactor coolant pump bus undervoltage and underfrequency, pressurizer low pressure, and pressurizer high level. On decreasing power, the above listed trips are automatically blocked.

P-8 On increasing power, P-8 automatically enables Reactor trips on low flow in one or more reactor coolant loops. On decreasing power, the P-8 automatically blocks the above trip.

P-9 On increasing power, P-9 automatically enables Reactor trip on Turbine trip. On decreasing power, P-9 automatically blocks Reactor trip on Turbine trip.

P-10 On increasing power, P-10 allows the manual block of the Intermediate Range trip and the Low Setpoint Power Range trip; and automatically blocks the Source Range trip and deenergizes the Source Range high voltage power. On decreasing power, the Intermediate Range trip and the Low Setpoint Power Range trip are automatically reactivated. Provides input to P-7.

P-13 Provides input to P-7.

SECTIONS 3.0 AND 4.0

LIMITING CONDITIONS FOR OPERATION

AND

SURVEILLANCE REQUIREMENTS

3/4 LIMITING CONDITIONS FOR OPERATION AND SURVEILLANCE REQUIREMENTS

3/4.0 APPLICABILITY

LIMITING CONDITION FOR OPERATION

3.0.1 Compliance with the Limiting Conditions for Operation contained in the succeeding specifications is required during the OPERATIONAL MODES or other conditions specified therein; except that upon failure to meet the Limiting Conditions for Operation, the associated ACTION requirements shall be met, except as provided in Specification 3.0.5.

3.0.2 Noncompliance with a specification shall exist when the requirements of the Limiting Condition for Operation and associated ACTION requirements are not met within the specified time intervals, except as provided in Specification 3.0.5. If the Limiting Condition for Operation is restored prior to expiration of the specified time intervals, completion of the ACTION requirements is not required.

3.0.3 When a Limiting Condition for Operation is not met, except as provided in the associated ACTION requirements, within 1 hour action shall be initiated to place the unit in a MODE in which the specification does not apply by placing it, as applicable, in:

a. At least HOT STANDBY within the next 6 hours,

b. At least HOT SHUTDOWN within the following 6 hours, and

c. At least COLD SHUTDOWN within the subsequent 24 hours.

Where corrective measures are completed that permit operation under the ACTION requirements, the action may be taken in accordance with the specified time limits as measured from the time of failure to meet the Limiting Condition for Operation. Exceptions to these requirements are stated in the individual specifications.

This specification is not applicable in MODE 5 or 6.

3.0.4 Entry into an OPERATIONAL MODE or another specified condition shall not be made when the conditions for the Limiting Conditions for Operation are not met and the associated ACTION requires a shutdown if they are not met within a specified time interval. Entry into an OPERATIONAL MODE or specified condition may be made in accordance with ACTION requirements when conformance to them permits continued operation of the facility for an unlimited period of time. This provision shall not prevent passage through or to OPERATIONAL MODES as required to comply with ACTION requirements. Exceptions to these requirements are stated in the individual specifications.

3.0.5 Equipment removed from service or declared inoperable to comply with ACTIONS may be returned to service under administrative control solely to perform testing required to demonstrate its OPERABILITY or the OPERABILITY of other equipment. This is an exception to Specifications 3.0.1 and 3.0.2 for the system returned to service under administrative control to perform the testing required to demonstrate OPERABILITY.

4.0.1 Surveillance Requirements shall be met during the OPERATIONAL MODES or other conditions specified for individual Limiting Conditions for Operation unless otherwise stated in an individual Surveillance Requirement. Failure to meet a Surveillance, whether such failure is experienced during the performance of the Surveillance or between performances of the Surveillance, shall be failure to meet the Limiting Condition for Operation. Failure to perform a Surveillance within the specified surveillance interval shall be failure to meet the Limiting Condition for Operation except as provided in Specification 4.0.3. Surveillances do not have to be performed on inoperable equipment or variables outside specified limits.

4.0.2 Each Surveillance Requirement shall be performed within the specified surveillance interval with a maximum allowable extension not to exceed 25 percent of the specified surveillance interval.

4.0.3 If it is discovered that a Surveillance was not performed within its specified surveillance interval, then compliance with the requirement to declare the Limiting Condition for Operation not met may be delayed, from the time of discovery, up to 24 hours or up to the limit of the specified surveillance interval, whichever is greater. This delay period is permitted to allow performance of the Surveillance. A risk evaluation shall be performed for any Surveillance delayed greater than 24 hours and the risk impact shall be managed.

If the Surveillance is not performed within the delay period, the Limiting Condition for Operation must immediately be declared not met, and the applicable ACTION(s) must be entered.

When the Surveillance is performed within the delay period and the Surveillance is not met, the Limiting Condition for Operation must immediately be declared not met, and the applicable ACTION(s) must be entered.

4.0.4 Entry into an OPERATIONAL MODE or other specified condition shall not be made unless the Surveillance Requirement(s) associated with the Limiting Condition for Operation has been performed within the stated surveillance interval or as otherwise specified. This provision shall not prevent passage through or to OPERATIONAL MODES as required to comply with ACTION requirements.

4.0.5 Surveillance Requirements for inservice inspection and testing of ASME Code Class 1, 2, and 3 components shall be applicable as follows:

a. Inservice inspection of ASME Code Class 1, 2, and 3 components shall be performed in accordance with Section XI of the ASME Boiler and Pressure Vessel Code and applicable Addenda as required by 10 CFR Part 50, Section 50.55a(g), except where specific written relief has been granted by the Commission pursuant to 10 CFR Part 50, Section 50.55a(g)(6)(i).

   Inservice testing of ASME Code Class 1, 2, and 3 components shall be performed in accordance with the Code for Operation and Maintenance of Nuclear Power Plants (ASME OM Code) and applicable Addenda as required by 10 CFR Part 50, Section 50.55a(f), except where specific written relief has been granted by the Commission pursuant to 10 CFR Part 50, Section 50.55a(f)(6)(i).

4.0.5 (Continued)

b. Surveillance intervals specified in Section XI of the ASME Boiler and Pressure Vessel Code and the ASME OM Code including applicable Addenda for the inservice inspection and testing activities required by the ASME Boiler and Pressure Vessel Code and the ASME OM Code including applicable Addenda shall be applicable as follows in these Technical Specifications:

ASME Boiler and Pressure Vessel Code and the ASME OM Code including applicable Addenda terminology for inservice inspection and testing activities	Required frequencies for performing service Inspection and testing activities.
Weekly	At least once per 7 days
Monthly	At least once per 31 days
Semi-quarterly	At least once per 46 days
Quarterly or every 3 months	At least once per 92 days
Semiannually or every 6 months	At least once per 184 days
Every 9 months	At least once per 276 days
Yearly or annually	At least once per 366 days
Biennially or every 2 years	At least once per 731 days

c. The provisions of Specification 4.0.2 are applicable to the above required frequencies for performing inservice inspection and testing activities;

d. Performance of the above inservice inspection and testing activities shall be in addition to other specified Surveillance Requirements; and

e. Nothing in the ASME Boiler and Pressure Vessel Code or the ASME OM Code shall be construed to supersede the requirements of any Technical Specification.

3/4.1 REACTIVITY CONTROL SYSTEMS

3/4.1.1 BORATION CONTROL

SHUTDOWN MARGIN -T_{avg} GREATER THAN 200°F

LIMITING CONDITION FOR OPERATION

3.1.1.1 The SHUTDOWN MARGIN for four-loop operation shall be greater than or equal to the limit specified in the CORE OPERATING LIMITS REPORT (COLR).

APPLICABILITY: MODES 1, 2*, 3, and 4.

ACTION:

With the SHUTDOWN MARGIN less than the limiting value, immediately initiate and continue boration equivalent to 30 gpm at a boron concentration greater than or equal to the limit specified in the COLR for the Boric Acid Storage System until the required SHUTDOWN MARGIN is restored.

SURVEILLANCE REQUIREMENTS

4.1.1.1.1 The SHUTDOWN MARGIN shall be determined to be greater than or equal to the limiting value:

a. Within 1 hour after detection of an inoperable control rod(s) and at least once per 12 hours thereafter while the rod(s) is inoperable. If the inoperable control rod is immovable or untrippable, the above required SHUTDOWN MARGIN shall be verified acceptable with an increased allowance for the withdrawn worth of the immovable or untrippable control rod(s);

b. When in MODE 1 or MODE 2 with k_{eff} greater than or equal to 1 at least once per 12 hours by verifying that control bank withdrawal is within the limits of Specification 3.1.3.6;

c. When in MODE 2 with k_{eff} less than 1, within 4 hours prior to achieving reactor criticality by verifying that the predicted critical control rod position is within the limits of Specification 3.1.3.6;

d. Prior to initial operation above 5% RATED THERMAL POWER after each fuel loading, by consideration of the factors of Specification 4.1.1.1.1e below, with the control banks at the maximum insertion limit of Specification 3.1.3.6; and

*See Special Test Exceptions Specification 3.10.1.

SURVEILLANCE REQUIREMENTS

4.1.1.1.1 (Continued)

e. When in MODE 3 or 4, at least once per 24 hours by consideration of the following factors:

1) Reactor Coolant System boron concentration,

2) Control rod position,

3) Reactor Coolant System average temperature,

4) Fuel burnup based on gross thermal energy generation,

5) Xenon concentration, and

6) Samarium concentration.

4.1.1.1.2 The overall core reactivity balance shall be compared to predicted values to demonstrate agreement within ± 1% Δk/k at least once per 31 Effective Full Power Days (EFPD). This comparison shall consider at least those factors stated in Specification 4.1.1.1.1e., above. The predicted reactivity values shall be adjusted (normalized) to correspond to the actual core conditions prior to exceeding a fuel burnup of 60 EFPD after each fuel loading.

BORATION CONTROL

SHUTDOWN MARGIN -T_{avg} LESS THAN OR EQUAL TO 200°F

LIMITING CONDITION FOR OPERATION

3.1.1.2 The SHUTDOWN MARGIN shall be greater than or equal to the limit specified in the CORE OPERATING LIMITS REPORT (COLR). Additionally, the Reactor Coolant System boron concentration shall be greater than or equal to the limit specified in the COLR when the reactor coolant loops are in a drained condition.

APPLICABILITY: MODE 5.

ACTION:

With the SHUTDOWN MARGIN less than the limit specified in the COLR or the Reactor Coolant System boron concentration less than the limit specified in the COLR, immediately initiate and continue boration equivalent to 30 gpm at a boron concentration greater than or equal to the limit specified in the COLR for the Boric Acid Storage System until the required SHUTDOWN MARGIN and boron concentration are restored.

SURVEILLANCE REQUIREMENTS

4.1.1.2 The SHUTDOWN MARGIN shall be determined to be greater than or equal to the limit specified in the COLR and the Reactor Coolant System boron concentration shall be determined to be greater than or equal to the limit specified in the COLR when the reactor coolant loops are in a drained condition:

a. Within 1 hour after detection of an inoperable control rod(s) and at least once per 12 hours thereafter while the rod(s) is inoperable. If the inoperable control rod is immovable or untrippable, the SHUTDOWN MARGIN shall be verified acceptable with an increased allowance for the withdrawn worth of the immovable or untrippable control rod(s); and

b. At least once per 24 hours by consideration of the following factors:

   1) Reactor Coolant System boron concentration,

   2) Control rod position,

   3) Reactor Coolant System average temperature,

   4) Fuel burnup based on gross thermal energy generation,

   5) Xenon concentration, and

   6) Samarium concentration.

MODERATOR TEMPERATURE COEFFICIENT

LIMITING CONDITION FOR OPERATION

3.1.1.3 The moderator temperature coefficient (MTC) shall be within the limits specified in the COLR. The maximum upper limit shall be less positive than $+0.5 \times 10^{-4}$ $\Delta k/k/°F$ for all the rods withdrawn, beginning of cycle life (BOL), for power levels up to 70% RATED THERMAL POWER with a linear ramp to 0 $\Delta k/k/°F$ at 100% RATED THERMAL POWER.

APPLICABILITY: Beginning of cycle life (BOL) limit - MODES 1 and 2* only**.
End of cycle life (EOL) limit - MODES 1, 2, and 3 only**.

ACTION:

a. With the MTC more positive than the BOL limit specified in the COLR, operation in MODES 1 and 2 may proceed provided:

   1. Control rod withdrawal limits are established and maintained sufficient to restore the MTC to less positive than the BOL limit specified in the COLR, within 24 hours or be in HOT STANDBY within the next 6 hours. These withdrawal limits shall be in addition to the insertion limits of Specification 3.1.3.6;

   2. The control rods are maintained within the withdrawal limits established above until a subsequent calculation verifies that the MTC has been restored to within its limits for the all rods withdrawn condition; and

   3. A Special Report is prepared and submitted to the Commission, pursuant to Specification 6.8.2, within 10 days, describing the value of the measured MTC, the interim control rod withdrawal limits, and the predicted average core burnup necessary for restoring the positive MTC to within its limit for the all rods withdrawn condition.

b. With the MTC more negative than the EOL limit specified in the COLR, be in HOT SHUTDOWN within 12 hours.

---

*With k_{eff} greater than or equal to 1.

**See Special Test Exceptions Specification 3.10.3.

SURVEILLANCE REQUIREMENTS

4.1.1.3 The MTC shall be determined to be within its limits during each fuel cycle as follows:

a. The MTC shall be measured and compared to the BOL limit specified in the COLR, prior to initial operation above 5% of RATED THERMAL POWER, after each fuel loading; and

b. The MTC shall be measured at any THERMAL POWER and compared to the 300 ppm surveillance limit specified in the COLR (all rods withdrawn, RATED THERMAL POWER condition) within 7 EFPD after reaching an equilibrium boron concentration of 300 ppm*. In the event this comparison indicates the MTC is more negative than the 300 ppm surveillance limit specified in the COLR, the MTC shall be remeasured, and compared to the EOL MTC limit specified in the COLR, at least once per 14 EFPD during the remainder of the fuel cycle.

*Measurement of the MTC in accordance with Surveillance Requirement 4.1.1.3.b may be suspended provided that the benchmark criteria in WCAP-13749-P-A and the Revised Prediction specified in the COLR are satisfied.

BORATION CONTROL

MINIMUM TEMPERATURE FOR CRITICALITY

LIMITING CONDITION FOR OPERATION

3.1.1.4 The Reactor Coolant System lowest operating loop temperature (T_{avg}) shall be greater than or equal to 551°F.

APPLICABILITY: MODES 1 and 2* **.

ACTION:

With a Reactor Coolant System operating loop temperature (T_{avg}) less than 551°F, restore T_{avg} to within its limit within 15 minutes or be in HOT STANDBY within the next 15 minutes.

SURVEILLANCE REQUIREMENTS

4.1.1.4 The Reactor Coolant System temperature (T_{avg}) shall be determined to be greater than or equal to 551°F:

a. Within 15 minutes prior to achieving reactor criticality, and

b. At least once per 30 minutes when the reactor is critical and the Reactor Coolant System T_{avg} is less than 561°F with the T_{avg} -T_{ref} Deviation Alarm not reset.

*With k_{eff} greater than or equal to 1.
**See Special Test Exceptions Specification 3.10.3.

PAGE INTENTIONALLY BLANK

PAGE INTENTIONALLY BLANK

PAGE INTENTIONALLY BLANK

PAGE INTENTIONALLY BLANK

PAGE INTENTIONALLY BLANK

PAGE INTENTIONALLY BLANK

PAGE INTENTIONALLY BLANK

3/4.1.2 BORATION SYSTEMS

ISOLATION OF UNBORATED WATER SOURCES - SHUTDOWN

LIMITING CONDITION FOR OPERATION

3.1.2.7 Provisions to isolate the Reactor Coolant System from unborated water sources shall be OPERABLE with:

a. The Boron Thermal Regeneration System (BTRS) isolated from the Reactor Coolant System, and

b. The Reactor Makeup Systems inoperable except for the capability of delivering up to the capacity of one Reactor Makeup Water pump to the Reactor Coolant System.

APPLICABILITY: MODES 4, 5, and 6

ACTION:

With the requirements of the above specification not satisfied immediately suspend all operations involving CORE ALTERATIONS or positive reactivity changes and, if within 1 hour the required SHUTDOWN MARGIN is not verified, initiate and continue boration equivalent to 30 gpm at a boron concentration greater than or equal to the limits specified in the COLR for the Boric Acid Storage System until the required SHUTDOWN MARGIN is restored and the isolation provisions are restored to OPERABLE.

SURVEILLANCE REQUIREMENTS

4.1.2.7 The provisions to isolate the Reactor Coolant System from unborated water sources shall be determined to be OPERABLE at least once per 31 days by:

a. Verifying that at least the BTRS outlet valve, CS-V-302, or the BTRS moderating heat exchanger outlet valve, CS-V-305, or the manual outlet isolation valve for each demineralizer* not saturated with boron, CS-V-284, CS-V-295, CS-V-288, CS-V-290, CS-V-291, is closed and locked closed, and

b. Verifying that power is removed from at least one of the Reactor Makeup Water pumps, RMW-P-16A or RMW-P-16B.

*A demineralizer may be unisolated to saturate a bed with boron provided the effluent is not directed back to the Reactor Coolant System.

3/4.1.3 MOVABLE CONTROL ASSEMBLIES

GROUP HEIGHT

LIMITING CONDITION FOR OPERATION

3.1.3.1 All full-length shutdown and control rods shall be OPERABLE and positioned within ± 12 steps (indicated position) of their group step counter demand position.

APPLICABILITY: MODES 1* and 2*.

ACTION:

a. With one or more full-length rods inoperable because of being immovable as a result of excessive friction or mechanical interference or known to be untrippable, determine that the SHUTDOWN MARGIN requirement of Specification 3.1.1.1 is satisfied within 1 hour and be in HOT STANDBY within 6 hours.

b. With one full-length rod trippable but inoperable due to causes other than addressed by ACTION a., above, or misaligned from its group step counter demand height by more than ± 12 steps (indicated position), POWER OPERATION may continue provided that within 1 hour:

   1. The rod is restored to OPERABLE status within the above alignment requirements, or

   2. The rod is declared inoperable and the remainder of the rods in the group with the inoperable rod are aligned to within ± 12 steps of the inoperable rod while maintaining the rod sequence and insertion limits of Specification 3.1.3.6. The THERMAL POWER level shall be restricted pursuant to Specification 3.1.3.6 during subsequent operation, or

   3. The rod is declared inoperable and the SHUTDOWN MARGIN requirement of Specification 3.1.1.1 is satisfied. POWER OPERATION may then continue provided that:

      a) A reevaluation of each accident analysis of Table 3.1-1 is performed within 5 days; this reevaluation shall confirm that the previously analyzed results of these accidents remain valid for the duration of operation under these conditions;

      b) The SHUTDOWN MARGIN requirement of Specification 3.1.1.1 is determined at least once per 12 hours;

*See Special Test Exceptions Specifications 3.10.2 and 3.10.3.

LIMITING CONDITION FOR OPERATION

3.1.3.1 ACTION b.3 (Continued)

c) A power distribution map is obtained from the Incore Detector System and $F_Q(Z)$ and $F^N_{\Delta H}$ are verified to be within their limits within 72 hours; and

d) The THERMAL POWER level is reduced to less than or equal to 75% of RATED THERMAL POWER within the next hour and within the following 4 hours the High Neutron Flux Trip Setpoint is reduced to less than or equal to 85% of RATED THERMAL POWER.

c. With more than one rod trippable but inoperable due to causes other than addressed by ACTION a. above, POWER OPERATION may continue provided that:

1. Within 1 hour, the remainder of the rods in the bank(s) with the inoperable rods are aligned to within ± 12 steps of the inoperable rods while maintaining the rod sequence and insertion limits of Specification 3.1.3.6. The THERMAL POWER level shall be restricted pursuant to Specification 3.1.3.6 during subsequent operation, and

2. The inoperable rods are restored to OPERABLE status within 72 hours.

d. With more than one rod misaligned from its group step counter demand height by more than ± 12 steps (indicated position), be in HOT STANDBY within 6 hours.

SURVEILLANCE REQUIREMENTS

4.1.3.1.1 The position of each full-length rod shall be determined to be within the group demand limit by verifying the individual rod positions at least once per 12 hours, except during time intervals when the rod position deviation monitor is inoperable; then verify the group positions at least once per 4 hours.

4.1.3.1.2 Each full-length rod not fully inserted in the core shall be determined to be OPERABLE by movement of at least 10 steps in any one direction at least once per 92 days.

TABLE 3.1-1

ACCIDENT ANALYSES REQUIRING REEVALUATION

IN THE EVENT OF AN INOPERABLE FULL-LENGTH ROD

Rod Cluster Control Assembly Insertion Characteristics

Rod Cluster Control Assembly Misalignment

Loss of Reactor Coolant from Small Ruptured Pipes or from Cracks in Large Pipes Which Actuates the Emergency Core Cooling System

Single Rod Cluster Control Assembly Withdrawal at Full Power

Major Reactor Coolant System Pipe Ruptures (Loss-of-Coolant Accident)

Major Secondary Coolant System Pipe Rupture

Rupture of a Control Rod Drive Mechanism Housing (Rod Cluster Control Assembly Ejection)

POSITION INDICATION SYSTEMS - OPERATING

LIMITING CONDITION FOR OPERATION

3.1.3.2 The Digital Rod Position Indication System and the Demand Position Indication System shall be OPERABLE and capable of determining the control rod positions within ± 12 steps.

APPLICABILITY: MODES 1 and 2.

ACTION:

a. With a maximum of one digital rod position indicator per bank inoperable, either:

   1. Determine the position of the nonindicating rod(s) indirectly by the Incore Detector System at least once per 8 hours and immediately after any motion of the nonindicating rod which exceeds 24 steps in one direction since the last determination of the rod's position, or

   2. Reduce THERMAL POWER to less than 50% of RATED THERMAL POWER within 8 hours.

b. With a maximum of one demand position indicator per bank inoperable, either:

   1. Verify that all digital rod position indicators for the affected bank are OPERABLE and that the most withdrawn rod and the least withdrawn rod of the bank are within a maximum of 12 steps of each other at least once per 8 hours, or

   2. Reduce THERMAL POWER to less than 50% of RATED THERMAL POWER within 8 hours.

SURVEILLANCE REQUIREMENTS

4.1.3.2 Each digital rod position indicator shall be determined to be OPERABLE by verifying that the Demand Position Indication System and the Digital Rod Position Indication System agree within 12 steps at least once per 12 hours, except during time intervals when the rod position deviation monitor is inoperable; then compare the Demand Position Indication System and the Digital Rod Position Indication System at least once per 4 hours.

MOVABLE CONTROL ASSEMBLIES

POSITION INDICATION SYSTEM - SHUTDOWN

LIMITING CONDITION FOR OPERATION

3.1.3.3 One digital rod position indicator (excluding demand position indication) shall be OPERABLE and capable of determining the control rod position within ± 12 steps for each shutdown or control rod not fully inserted.

APPLICABILITY: MODES 3* **, 4* **, and 5* **

ACTION:

With less than the above required position indicator(s) OPERABLE, immediately open the Reactor Trip System breakers.

SURVEILLANCE REQUIREMENTS

4.1.3.3 Each of the above required digital rod position indicator(s) shall be determined to be OPERABLE by verifying that the digital rod position indicators agree with the demand position indicators within 12 steps when exercised over the full range of rod travel at least once per 18 months.

*With the Reactor Trip System breakers in the closed position.
**See Special Test Exceptions Specification 3.10.5.

MOVABLE CONTROL ASSEMBLIES

ROD DROP TIME

LIMITING CONDITION FOR OPERATION

3.1.3.4 The individual full-length (shutdown and control) rod drop time from the mechanical fully withdrawn position shall be less than or equal to 2.4 seconds from beginning of decay of stationary gripper coil voltage to dashpot entry with:

a. T_{avg} for each loop greater than or equal to 551°F, and

b. All reactor coolant pumps operating.

APPLICABILITY: MODES 1 and 2.

ACTION:

With the drop time of any full-length rod determined to exceed the above limit, restore the rod drop time to within the above limit prior to proceeding to MODE 1 or 2.

SURVEILLANCE REQUIREMENTS

4.1.3.4 The rod drop time of full-length rods shall be demonstrated through measurement prior to reactor criticality:

a. For all rods following each removal of the reactor vessel head,

b. For specifically affected individual rods following any maintenance on or modification to the Control Rod Drive System that could affect the drop time of those specific rods, and

c. At least once per 18 months.

MOVABLE CONTROL ASSEMBLIES

SHUTDOWN ROD INSERTION LIMIT

LIMITING CONDITION FOR OPERATION

3.1.3.5 All shutdown rods shall be fully withdrawn# as specified in the CORE OPERATING LIMITS REPORT (COLR).

APPLICABILITY: MODES 1* and 2* **.

ACTION:

With a maximum of one shutdown rod not fully withdrawn#, except for surveillance testing pursuant to Specification 4.1.3.1.2, within 1 hour either:

a. Fully withdraw the rod, or

b. Declare the rod to be inoperable and apply Specification 3.1.3.1.

SURVEILLANCE REQUIREMENTS

4.1.3.5 Each shutdown rod shall be determined to be fully withdrawn# as specified in the COLR:

a. Within 15 minutes prior to withdrawal of any rods in Control Bank A, B, C, or D during an approach to reactor criticality, and

b. At least once per 12 hours thereafter.

*See Special Test Exceptions Specifications 3.10.2 and 3.10.3.

**With k_{eff} greater than or equal to 1.

#The fully withdrawn position is defined as the interval within 225 to the mechanical fully withdrawn position, inclusive.

MOVABLE CONTROL ASSEMBLIES

CONTROL ROD INSERTION LIMITS

LIMITING CONDITION FOR OPERATION

3.1.3.6 The control banks shall be limited in physical insertion as specified in the CORE OPERATING LIMITS REPORT (COLR).

APPLICABILITY: MODES 1* and 2* **.

ACTION:

With the control banks inserted beyond the insertion limits specified in the COLR, except for surveillance testing pursuant to Specification 4.1.3.1.2:

a. Restore the control banks to within the limits within 2 hours, or

b. Reduce THERMAL POWER within 2 hours to less than or equal to that fraction of RATED THERMAL POWER which is allowed by the bank position using the insertion limits specified in the COLR, or

c. Be in at least HOT STANDBY within 6 hours.

SURVEILLANCE REQUIREMENTS

4.1.3.6 The position of each control bank shall be determined to be within the insertion limits at least once per 12 hours, except during time intervals when the rod insertion limit monitor is inoperable; then verify the individual rod positions at least once per 4 hours.

*See Special Test Exceptions Specifications 3.10.2 and 3.10.3.
**With k_{eff} greater than or equal to 1.

PAGE INTENTIONALLY BLANK

3/4.2 POWER DISTRIBUTION LIMITS

3/4.2.1 AXIAL FLUX DIFFERENCE

LIMITING CONDITION FOR OPERATION

3.2.1 The indicated AXIAL FLUX DIFFERENCE (AFD) shall be maintained within the limits specified in the COLR.

APPLICABILITY: MODE 1 above 50% RATED THERMAL POWER.

ACTION:

a. With the indicated AFD* outside of the applicable limits specified in the COLR:

1. Either restore the indicated AFD to within the COLR specified limits within 15 minutes, or

2. Reduce THERMAL POWER to less than 50% of RATED THERMAL POWER within 30 minutes, and

3. THERMAL POWER shall not be increased above 50% of RATED THERMAL POWER unless the indicated AFD is within the limits specified in the COLR.

*The indicated AFD shall be considered outside of its limits when two or more OPERABLE excore channels are indicating the AFD to be outside the limits.

3/4.2 POWER DISTRIBUTION LIMITS

3/4.2.1 AXIAL FLUX DIFFERENCE

SURVEILLANCE REQUIREMENTS

4.2.1.1 The indicated AFD shall be determined to be within its limits during POWER OPERATION above 50% of RATED THERMAL POWER by:

a. Monitoring the indicated AFD for each OPERABLE excore channel at least once per 7 days when the AFD Monitor Alarm is OPERABLE, and

b. Monitoring and logging the indicated AFD for each OPERABLE excore channel at least once per hour for the first 24 hours and at least once per 30 minutes thereafter, when the AFD Monitor Alarm is inoperable. The logged values of the indicated AFD shall be assumed to exist during the interval preceding each logging.

4.2.1.2 (THIS SPECIFICATION NUMBER IS NOT USED)

THIS PAGE INTENTIONALLY BLANK

3/4 2.2 HEAT FLUX HOT CHANNEL FACTOR - $F_Q(Z)$

LIMITING CONDITION FOR OPERATION

3.2.2 $F_Q(Z)$ shall be limited by the following relationships:

$$F_Q(Z) \leq \frac{F_Q^{RTP}}{P} K(Z) \text{ for } P > 0.5$$

$$F_Q(Z) \leq \frac{F_Q^{RTP}}{.5} K(Z) \text{ for } P \leq 0.5$$

Where: $P = \frac{\text{THERMAL POWER}}{\text{RATED THERMAL POWER}}$, and

F_Q^{RTP} = the F_Q limit at RATED THERMAL POWER (RTP) specified in the COLR, and

$K(Z)$ = the normalized $F_Q(Z)$ as a function of core height as specified in the COLR.

APPLICABILITY: MODE 1.

ACTION:

a. With $F_Q(Z)$ exceeding its limit:

1. Reduce THERMAL POWER at least 1% for each 1% $F_Q(Z)$ exceeds the limit within 15 minutes and similarly reduce the Power Range Neutron Flux-High Trip Setpoints within the next 4 hours; POWER OPERATION may proceed for up to a total of 72 hours; subsequent POWER OPERATION may proceed provided the Overpower ΔT Trip Setpoints have been reduced at least 1% for each 1% $F_Q(Z)$ exceeds the limit, and

2. THERMAL POWER may be increased, provided FQ(Z) is demonstrated through incore mapping to be within its limit.

THIS PAGE INTENTIONALLY BLANK

SURVEILLANCE REQUIREMENTS

4.2.2.1 The provisions of Specification 4.0.4 are not applicable.

4.2.2.2 $F_Q(Z)$ shall be evaluated to determine if $F_Q(Z)$ is within its limits by:

a. Using the incore detectors to obtain a power distribution map at any THERMAL POWER greater than 5% of RATED THERMAL POWER.

b. Increasing the measured $F_Q(Z)$ component of the power distribution map by 3% to account for manufacturing tolerances and further increasing the value by 5% when using the moveable incore detectors or 5.21% when using the fixed incore detectors to account for measurement uncertainties.

c. Satisfying the following relationship:

$$F_Q^M(Z) \leq \frac{F_Q^{RTP} \times K(Z)}{P \times W(Z)} \quad \text{for } P > 0.5$$

$$F_Q^M(Z) \leq \frac{F_Q^{RTP} \times K(Z)}{0.5 \times W(Z)} \quad \text{for } P \leq 0.5$$

where $F_Q^M(Z)$ is the measured $F_Q(Z)$ increased by the allowances for manufacturing tolerances and measurement uncertainty, F_Q^{RTP} is the F_Q limit, K(Z) is the normalized $F_Q(Z)$ as a function of core height, P is the relative THERMAL POWER, and W(Z) is the cycle dependent function that accounts for power distribution transients encountered during normal operation. F_Q^{RTP}, K(Z), and W(Z) are specified in the COLR.

d. Measuring $F_Q^M(Z)$ according to the following schedule:

1) Upon achieving equilibrium conditions after exceeding by 20% or more of RATED THERMAL POWER, the THERMAL POWER at which $F_Q(Z)$ was last determined*, or

2) At least once per 31 Effective Full Power Days (EFPD), whichever occurs first.

* During power escalation at the beginning of each cycle, power level may be increased until a power level for extended operation has been achieved and a power distribution map obtained.

e. With measurements indicating that the maximum over the elevation Z of $\frac{F_Q^M(Z)}{K(Z)}$ has increased since the previous determination of $F_Q^M(Z)$ one of the following actions shall be taken:

1) Increase $F_Q^M(Z)$ by the appropriate factor specified in the COLR prior to confirming the relationship specified in Specification 4.2.2.2.c, or

2) $F_Q^M(Z)$ shall be measured at least once per 7 EFPD until two successive maps indicate that the maximum over the elevation Z of $\frac{F_Q^M(Z)}{K(Z)}$ is not increasing.

f. With the relationship specified in Specification 4.2.2.2.c above not being satisfied:

1) Calculate the percent $F_Q(Z)$ exceeds its limit by the following expression:

$$\left\{\text{max. over } Z\left(\left[\frac{F_Q^M(Z)\times W(Z)}{\frac{F_Q^{RTP}}{P}\times K(Z)}\right]-1\right)\right\}\times 100 \text{ for } P \geq 0.5$$

$$\left\{\text{max. over } Z\left(\left[\frac{F_Q^M(Z)\times W(Z)}{\frac{F_Q^{RTP}}{0.5}\times K(Z)}\right]-1\right)\right\}\times 100 \text{ for } P < 0.5$$

2) Place the core in an equilibrium condition where the limit in Specification 4.2.2.2.c is satisfied within 2 hours. Power level may then be increased provided the AFD limits of Specification 3.2.1 are reduced 1% AFD for each percent FQ(Z) exceeds it limit.

g. The limits specified in Specification 4.2.2.2.c, 4.2.2.2.e, and 4.2.2.2.f above are not applicable in the following core plane regions:

1) Lower core region from 0 to 10%, inclusive.

2) Upper core region from 90 to 100%, inclusive.

4.2.2.3 When $F_Q(Z)$ is measured for reasons other than meeting the requirements of Specification 4.2.2.2, an overall measured $F_Q(Z)$ shall be obtained from a power distribution map and increased by 3% to account for manufacturing tolerances and further increased by 5% when using the moveable incore detectors or 5.21% when using the fixed incore detectors to account for measurement uncertainty.

4.2.2.4 (THIS SPECIFICATION NUMBER IS NOT USED)

PAGE INTENTIONALLY BLANK

3/4.2.3 NUCLEAR ENTHALPY RISE HOT CHANNEL FACTOR

LIMITING CONDITION FOR OPERATION

3.2.3 $F^N_{\Delta H}$ shall be less than or equal to the limits specified in the COLR.

APPLICABILITY: MODE 1.

ACTION:

With $F^N_{\Delta H}$ exceeding its limit:

a. Within 2 hours reduce the THERMAL POWER to the level where the LIMITING CONDITION FOR OPERATION is satisfied.

b. THERMAL POWER may be increased, provided $F^N_{\Delta H}$ is demonstrated through incore mapping to be within its limit.

SURVEILLANCE REQUIREMENTS

4.2.3.1 The provisions of Specification 4.0.4 are not applicable.

4.2.3.2 $F^N_{\Delta H}$ shall be demonstrated to be within its limit prior to operation above 75% RATED THERMAL POWER after each fuel loading and at least once per 31 EFPD thereafter by:

a. Using the Incore Detector System to obtain a power distribution map at any THERMAL POWER greater than 5% RATED THERMAL POWER.

b. Using the measured value of $F^N_{\Delta H}$ which does not include an allowance for measurement uncertainty.

3/4.2.4 QUADRANT POWER TILT RATIO

LIMITING CONDITION FOR OPERATION

3.2.4 The QUADRANT POWER TILT RATIO shall not exceed 1.02.

APPLICABILITY: MODE 1, above 50% of RATED THERMAL POWER*.

ACTION:

With the QUADRANT POWER TILT RATIO determined to exceed 1.02:

a. Within 2 hours reduce THERMAL POWER at least 3% from RATED THERMAL POWER for each 1% of indicated QUADRANT POWER TILT RATIO in excess of 1 and similarly reduce the Power Range Neutron Flux-High Trip Setpoints within the next 4 hours.

b. Within 24 hours and every 7 days thereafter, verify that $F_Q(Z)$ and $F^N_{\Delta H}$ are within their limits by performing Surveillance Requirements 4.2.2.2 and 4.2.3.2. THERMAL POWER and setpoint reductions shall then be in accordance with the ACTION statements of Specifications 3.2.2 and 3.2.3.

SURVEILLANCE REQUIREMENTS

4.2.4.1 The QUADRANT POWER TILT RATIO shall be determined to be within the limit above 50% of RATED THERMAL POWER by:

a. Calculating the ratio at least once per 7 days when the alarm is OPERABLE, and

b. Calculating the ratio at least once per 12 hours during steady-state operation when the alarm is inoperable.

4.2.4.2 The QUADRANT POWER TILT RATIO shall be determined to be within the limit when above 75% of RATED THERMAL POWER with one Power Range channel inoperable by using the Incore Detector System to confirm indicated QUADRANT POWER TILT RATIO at least once per 12 hours by either:

a. Using the four pairs of symmetric detector locations or

b. Using the Incore Detector System to monitor the QUADRANT POWER TILT RATIO subject to the requirements of Technical Requirement TR20-3.3.3.2.

*See Special Test Exceptions Specification 3.10.2

3/4.2.5 DNB PARAMETERS

LIMITING CONDITION FOR OPERATION

3.2.5 The following DNB-related parameters shall be maintained within the following limits:

a. Reactor Coolant System T_{avg} is less than or equal to the limit specified in the COLR,

b. Pressurizer Pressure is greater than or equal to the limit specified in the COLR*, and

c. Reactor Coolant System Flow shall be:

1. $\geq$ 374,400 gpm**; and,

2. $\geq$ 383,800 gpm***

APPLICABILITY: MODE 1.

ACTION:

With any of the above parameters exceeding its limit, restore the parameter to within its limit within 2 hours or reduce THERMAL POWER to less than 5% of RATED THERMAL POWER within the next 4 hours.

SURVEILLANCE REQUIREMENTS

4.2.5.1 Each of the parameters shown above shall be verified to be within its limits at least once per 12 hours.

4.2.5.2 The RCS flow rate indicators shall be subjected to CHANNEL CALIBRATION at least once per 18 months.

4.2.5.3 The RCS total flow rate shall be determined by an approved method to be within its limit prior to operation above 95% of RATED THERMAL POWER after each fuel loading. The provisions of Specification 4.0.4 are not applicable for entry into MODE 1.

*Limit not applicable during either a THERMAL POWER ramp in excess of 5% of RATED THERMAL POWER per minute or a THERMAL POWER step in excess of 10% of RATED THERMAL POWER.

**Thermal Design Flow. An allowance for measurement uncertainty shall be made when comparing measured flow to Thermal Design Flow.

***Minimum measured flow used in the Revised Thermal Design Procedure.

3/4.3 INSTRUMENTATION

3/4.3.1 REACTOR TRIP SYSTEM INSTRUMENTATION

LIMITING CONDITION FOR OPERATION

3.3.1 As a minimum, the Reactor Trip System instrumentation channels and interlocks of Table 3.3-1 shall be OPERABLE.

APPLICABILITY: As shown in Table 3.3-1.

ACTION:

As shown in Table 3.3-1.

SURVEILLANCE REQUIREMENTS

4.3.1.1 Each Reactor Trip System instrumentation channel and interlock and the automatic trip logic shall be demonstrated OPERABLE by the performance of the Reactor Trip System Instrumentation Surveillance Requirements specified in Table 4.3-1.

4.3.1.2 The REACTOR TRIP SYSTEM RESPONSE TIME of each Reactor trip function shall be verified to be within its limit at least once per 18 months. Each verification shall include at least one train such that both trains are verified at least once per 36 months and one channel per function such that all channels are verified at least once every N times 18 months where N is the total number of redundant channels in a specific Reactor trip function as shown in the "Total No. of Channels" column of Table 3.3-1.

TABLE 3.3-1

REACTOR TRIP SYSTEM INSTRUMENTATION

FUNCTIONAL UNIT	TOTAL NO. OF CHANNELS	CHANNELS TO TRIP	MINIMUM CHANNELS OPERABLE	APPLICABLE MODES	ACTION
1. Manual Reactor Trip	2	1	2	1, 2	1
	2	1	2	3*, 4*, 5*	10
2. Power Range, Neutron Flux					
a. High Setpoint	4	2	3	1, 2	2
b. Low Setpoint	4	2	3	1# # #, 2	2
3. Power Range, Neutron Flux High Positive Rate	4	2	3	1, 2	2
4. (NOT USED)					
5. Intermediate Range, Neutron Flux	2	1	2	1# # #, 2	3
6. Source Range, Neutron Flux					
a. Startup	2	1	2	2# #	4
b. Shutdown	2	0	1	3, 4, 5	5
c. Shutdown	2	1	2	3*, 4*, 5*	10
7. Overtemperature ΔT	4	2	3	1, 2	6
8. Overpower ΔT	4	2	3	1, 2	6
9. Pressurizer Pressure--Low	4	2	3	1**	6
10. Pressurizer Pressure--High	4	2	3	1, 2	6
11. Pressurizer Water Level--High	3	2	2	1**	6#

TABLE 3.3-1 (Continued)

REACTOR TRIP SYSTEM INSTRUMENTATION

FUNCTIONAL UNIT	TOTAL NO. OF CHANNELS	CHANNELS TO TRIP	MINIMUM CHANNELS OPERABLE	APPLICABLE MODES	ACTION
12. Reactor Coolant Flow—Low					
a. Single Loop (Above P-8)	3/loop	2/loop in any operating loop	2/loop in each operating loop	1	6#
b. Two Loops (Above P-7 and below P-8)	3/loop	2/loop in two operating loops	2/loop each operating loop	1	6#
13. Steam Generator Water Level--Low--Low	4/stm. gen.	2/stm. gen. in any operating stm. gen.	3/stm. gen. each operating stm. gen.	1, 2	6
14. Undervoltage--Reactor Coolant Pumps	4-2/bus	2-1/bus	2 on one bus	1**	6
15. Underfrequency--Reactor Coolant Pumps	4-2/bus	2-1/bus	2 on one bus	1**	6
16. Turbine Trip					
a. Low Fluid Oil Pressure	3	2	2	1***	6#
b. Turbine Stop Valve Closure	4	4	4	1***	11
17. Safety Injection Input from ESF	2	1	2	1, 2	7
18. Reactor Trip System Interlocks					
a. Intermediate Range Neutron Flux, P-6	2	1	2	2# #	8

TABLE 3.3-1 (Continued)

REACTOR TRIP SYSTEM INSTRUMENTATION

FUNCTIONAL UNIT	TOTAL NO. OF CHANNELS	CHANNELS TO TRIP	MINIMUM CHANNELS OPERABLE	APPLICABLE MODES	ACTION
18. b. Low Power Reactor Trips Block, P-7					
P-10 Input	4	2	3	1	8
or					
P-13 Input	2	1	2	1	8
c. Power Range Neutron Flux, P-8	4	2	3	1	8
d. Power Range Neutron Flux, P-9	4	2	3	1	8
e. Power Range Neutron Flux, P-10	4	2	3	1	8
f. Turbine Impulse Chamber Pressure, P-13	2	1	2	1	8
19. Reactor Trip Breakers	2	1	2	1, 2	9, 12
	2	1	2	3*, 4*, 5*	10
20. Automatic Trip and Interlock Logic	2	1	2	1, 2	7
	2	1	2	3*, 4*, 5*	10

TABLE 3.3-1 (Continued)

TABLE NOTATIONS

*When the Reactor Trip System breakers are in the closed position and the Control Rod Drive System is capable of rod withdrawal.

**Trip function automatically blocked or bypassed below the P-7 (At Power) Setpoint.

***Trip function automatically blocked below the P-9 (Reactor Trip/Turbine Trip Interlock) Setpoint.

#The provisions of Specification 3.0.4 are not applicable.

#Below the P-6 (Intermediate Range Neutron Flux Interlock) Setpoint.

#Below the P-10 (Low Setpoint Power Range Neutron Flux Interlock) Setpoint.

ACTION STATEMENTS

ACTION 1 - With the number of OPERABLE channels one less than the Minimum Channels OPERABLE requirement, restore the inoperable channel to OPERABLE status within 48 hours or be in HOT STANDBY within the next 6 hours.

ACTION 2 - With the number of OPERABLE channels one less than the Total Number of Channels, STARTUP and/or POWER OPERATION may proceed provided the following conditions are satisfied:

a. The inoperable Channel is placed in the tripped condition within 6 hours,

b. The Minimum Channels OPERABLE requirement is met; however, the inoperable channel may be bypassed for up to 4 hours for surveillance testing of other channels per Specification 4.3.1.1, and

c. Either, THERMAL POWER is restricted to less than or equal to 75% of RATED THERMAL POWER and the Power Range Neutron Flux Trip Setpoint is reduced to less than or equal to 85% of RATED THERMAL POWER within 4 hours; or, the QUADRANT POWER TILT RATIO is monitored at least once per 12 hours per Specification 4.2.4.2.

TABLE 3.3-1 (Continued)

ACTION STATEMENTS (Continued)

ACTION 3 - With the number of channels OPERABLE one less than the Minimum Channels OPERABLE requirement and with the THERMAL POWER level:

a. Below the P-6 (Intermediate Range Neutron Flux Interlock) Setpoint, restore the inoperable channel to OPERABLE status prior to increasing THERMAL POWER above the P-6 Setpoint, and

b. Above the P-6 (Intermediate Range Neutron Flux Interlock) Setpoint but below 10% of RATED THERMAL POWER, restore the inoperable channel to OPERABLE status prior to increasing THERMAL POWER above 10% of RATED THERMAL POWER.

ACTION 4 - With the number of OPERABLE channels one less than the Minimum Channels OPERABLE requirement, suspend all operations involving positive reactivity changes.

ACTION 5 - With the number of OPERABLE channels one less than the Minimum Channels OPERABLE requirement, restore the inoperable channel to OPERABLE status within 48 hours or open the Reactor Trip System breakers, suspend all operations involving positive reactivity changes and verify that valve RMW-V31 is closed and secured in position within the next hour.

ACTION 6 - With the number of OPERABLE channels one less than the Total Number of Channels, STARTUP and/or POWER OPERATION may proceed provided the following conditions are satisfied:

a. The inoperable channel is placed in the tripped condition within 6 hours, and

b. The Minimum Channels OPERABLE requirement is met; however, the inoperable channel may be bypassed for up to 4 hours for surveillance testing of other channels per Specification 4.3.1.1.

ACTION 7 - With the number of OPERABLE channels one less than the Minimum Channels OPERABLE requirement, restore the inoperable channel to OPERABLE status within 6 hours or be in a least HOT STANDBY within the next 6 hours; however, one channel may be bypassed for up to 4 hours for surveillance testing per Specification 4.3.1.1, provided the other channel is OPERABLE.

ACTION 8 - With less than the Minimum Number of Channels OPERABLE, within 1 hour determine by observation of the associated permissive annunciator window(s) that the interlock is in its required state for the existing plant condition, or apply Specification 3.0.3.

TABLE 3.3-1 (Continued)

ACTION STATEMENTS (Continued)

ACTION 9 - With the number of OPERABLE channels one less than the Minimum Channels OPERABLE requirement, be in at least HOT STANDBY within 6 hours; however, one channel may be bypassed for up to 2 hours for surveillance testing per Specification 4.3.1.1, provided the other channel is OPERABLE.

ACTION 10 - With the number of OPERABLE channels one less than the Minimum Channels OPERABLE requirement, restore the inoperable channel to OPERABLE status within 48 hours or open the Reactor Trip System breakers within the next hour.

ACTION 11 - With the number of OPERABLE channels less than the Total Number of Channels, operation may continue provided the inoperable channels are placed in the tripped condition within 6 hours.

ACTION 12 - With one of the diverse trip features (undervoltage or shunt trip attachment) inoperable, restore it to OPERABLE status within 48 hours or declare the breaker inoperable and apply ACTION 9. The breaker shall not be bypassed while one of the diverse trip features is inoperable except for the time required for performing maintenance to restore the breaker to OPERABLE status.

TABLE 3.3-2

(This table number is not used)

TABLE 4.3-1

REACTOR TRIP SYSTEM INSTRUMENTATION SURVEILLANCE REQUIREMENTS

FUNCTIONAL UNIT	CHANNEL CHECK	CHANNEL CALIBRATION	ANALOG CHANNEL OPERATIONAL TEST	TRIP ACTUATING DEVICE OPERATIONAL TEST	ACTUATION LOGIC TEST	MODES FOR WHICH SURVEILLANCE IS REQUIRED
1. Manual Reactor Trip	N.A.	N.A.	N.A.	R(13)	N.A.	1,2,3*,4*,5*
2. Power Range, Neutron Flux						
a. High Setpoint	S	D(2, 4), M(3, 4), Q(4, 6), R(4, 5)	Q	N.A.	N.A.	1, 2
b. Low Setpoint	S	R(4)	S/U(1)	N.A.	N.A.	1***, 2
3. Power Range, Neutron Flux, High Positive Rate	N.A.	R(4)	Q	N.A.	N.A.	1, 2
4. (NOT USED)						
5. Intermediate Range, Neutron Flux	S	R(4, 5)	S/U(1)	N.A.	N.A.	1***, 2
6. Source Range, Neutron Flux	S	R(4, 5)	S/U(8),Q(9)	N.A.	N.A.	2**, 3, 4, 5
7. Overtemperature ΔT	S	R	Q	N.A.	N.A.	1, 2
8. Overpower ΔT	S	R	Q	N.A.	N.A.	1, 2
9. Pressurizer Pressure--Low	S	R	Q	N.A.	N.A.	1
10. Pressurizer Pressure--High	S	R	Q	N.A.	N.A.	1, 2
11. Pressurizer Water Level--High	S	R	Q	N.A.	N.A.	1
12. Reactor Coolant Flow--Low	S	R	Q	N.A.	N.A.	1

TABLE 4.3-1 (Continued)

REACTOR TRIP SYSTEM INSTRUMENTATION SURVEILLANCE REQUIREMENTS

FUNCTIONAL UNIT	CHANNEL CHECK	CHANNEL CALIBRATION	ANALOG CHANNEL OPERATIONAL TEST	TRIP ACTUATING DEVICE OPERATIONAL TEST	ACTUATION LOGIC TEST	MODES FOR WHICH SURVEILLANCE IS REQUIRED
13. Steam Generator Water Level--Low-Low	S	R	Q	N.A.	N.A.	1, 2
14. Undervoltage - Reactor Coolant Pumps	N.A.	R	N.A.	Q	N.A.	1
15. Underfrequency - Reactor Coolant Pumps	N.A.	R	N.A.	Q	N.A.	1
16. Turbine Trip						
a. Low Fluid Oil Pressure	N.A.	R	N.A.	S/U(8, 10)	N.A.	1
b. Turbine Stop Valve	N.A.	R	N.A.	S/U(8, 10)	N.A.	1
17. Safety Injection Input from ESF	N.A.	N.A.	N.A.	R	N.A.	1, 2
18. Reactor Trip System Interlocks						
a. Intermediate Range Neutron Flux, P-6	N.A.	R(4)	R	N.A.	N.A.	2**
b. Low Power Reactor Trips Block, P-7	N.A.	R(4)	R	N.A.	N.A.	1
c. Power Range Neutron Flux, P-8	N.A.	R(4)	R	N.A.	N.A.	1
d. Power Range Neutron Flux, P-9	N.A.	R(4)	R	N.A.	N.A.	1

TABLE 4.3-1 (Continued)

REACTOR TRIP SYSTEM INSTRUMENTATION SURVEILLANCE REQUIREMENTS

FUNCTIONAL UNIT	CHANNEL CHECK	CHANNEL CALIBRATION	ANALOG CHANNEL OPERATIONAL TEST	TRIP ACTUATING DEVICE OPERATIONAL TEST	ACTUATION LOGIC TEST	MODES FOR WHICH SURVEILLANCE IS REQUIRED
Reactor Trip System Interlocks (Continued)						
e. Power Range Neutron Flux, P-10	N.A.	R(4)	R	N.A.	N.A.	1, 2
f. Turbine Impulse Chamber Pressure, P-13	N.A.	R	R	N.A.	N.A.	1
19. Reactor Trip Breaker	N.A.	N.A.	N.A.	M(7, 11)	N.A.	1, 2, 3*, 4*, 5*
20. Automatic Trip and Interlock Logic	N.A.	N.A.	N.A.	N.A.	M(7)	1, 2, 3*, 4*, 5*
21. Reactor Trip Bypass Breaker	N.A.	N.A.	N.A.	M(7, 14), R(15)	N.A.	1, 2, 3*, 4*, 5*

TABLE 4.3-1 (Continued)

TABLE NOTATIONS

*Only if the Reactor Trip System breakers happen to be closed and the Control Rod Drive System is capable of rod withdrawal.

**Below P-6 (Intermediate Range Neutron Flux Interlock) Setpoint.

***Below P-10 (Low Setpoint Power Range Neutron Flux Interlock) Setpoint.

(1) If not performed in previous 92 days.

(2) Comparison of calorimetric to excore power indication above 15% of RATED THERMAL POWER. Adjust excore channel gains consistent with calorimetric power if absolute difference is greater than 2%. The provisions of Specification 4.0.4 are not applicable to entry into MODE 2 or 1.

(3) Single point comparison of incore to excore AXIAL FLUX DIFFERENCE above 50% of RATED THERMAL POWER. Recalibrate if the absolute difference is greater than or equal to 3%. The provisions of Specification 4.0.4 are not applicable for entry into MODE 2 or 1. For the purposes of this surveillance requirement, monthly shall mean at least once per 31 EFPD.

(4) Neutron detectors may be excluded from CHANNEL CALIBRATION.

(5) Initial plateau curves shall be measured for each detector. Subsequent plateau curves shall be obtained, evaluated and compared to the initial curves. For the Intermediate Range and Power Range Neutron Flux channels the provisions of Specification 4.0.4 are not applicable for entry into MODE 2 or 1.

(6) Incore - Excore Calibration, above 75% of RATED THERMAL POWER. The provisions of Specification 4.0.4 are not applicable for entry into MODE 2 or 1. For the purposes of this surveillance requirement, quarterly shall mean at least once per 92 EFPD.

(7) Each train shall be tested at least every 62 days on a STAGGERED TEST BASIS.

(8) If not performed in previous 31 days.

(9) Surveillance in MODES 3*, 4*, and 5* shall also include verification that permissives P-6 and P-10 are in their required state for existing plant conditions by observation of the permissive annunciator window.

(10) Setpoint verification is not applicable.

(11) The TRIP ACTUATING DEVICE OPERATIONAL TEST shall independently verify the OPERABILITY of the undervoltage and shunt trip attachments of the Reactor Trip Breakers.

TABLE 4.3-1 (Continued)

TABLE NOTATIONS (Continued)

(12) Number not used.

(13) The TRIP ACTUATING DEVICE OPERATIONAL TEST shall independently verify the OPERABILITY of the undervoltage and shunt trip circuits for the Manual Reactor Trip Function. The test shall also verify the OPERABILITY of the Bypass Breaker trip circuit(s).

(14) Local manual shunt trip prior to placing breaker in service.

(15) Automatic undervoltage trip

3/4.3.2 ENGINEERED SAFETY FEATURES ACTUATION SYSTEM INSTRUMENTATION

LIMITING CONDITION FOR OPERATION

3.3.2 The Engineered Safety Features Actuation System (ESFAS) instrumentation channels and interlocks shown in Table 3.3-3 shall be OPERABLE with their Trip Setpoints set consistent with the values shown in the Trip Setpoint column of Table 3.3-4.

APPLICABILITY: As shown in Table 3.3-3.

ACTION:

a. With an ESFAS Instrumentation or Interlock Trip Setpoint trip less conservative than the value shown in the Trip Setpoint column but more conservative than the value shown in the Allowable Value column of Table 3.3-4, adjust the Setpoint consistent with the Trip Setpoint value.

b. With an ESFAS Instrumentation or Interlock Trip Setpoint less conservative than the value shown in the Allowable Value column of Table 3.3-4, either:

   1. Adjust the Setpoint consistent with the Trip Setpoint value of Table 3.3-4, and determine within 12 hours that Equation 2.2-1 was satisfied for the affected channel, or

   2. Declare the channel inoperable and apply the applicable ACTION statement requirements of Table 3.3-3 until the channel is restored to OPERABLE status with its Setpoint adjusted consistent with the Trip Setpoint value.

Equation 2.2-1 $Z + R + S \leq TA$

Where:

Z = The value from Column Z of Table 3.3-4 for the affected channel,

R = The "as measured" value (in percent span) of rack error for the affected channel,

S = Either the "as measured" value (in percent span) of the sensor error, or the value from Column S (Sensor Error) of Table 3.3-4 for the affected channel, and

TA = The value from Column TA (Total Allowance) of Table 3.3-4 for the affected channel.

c. With an ESFAS instrumentation channel or interlock inoperable, take the ACTION shown in Table 3.3-3.

SURVEILLANCE REQUIREMENTS

4.3.2.1 Each ESFAS instrumentation channel and interlock and the automatic actuation logic and relays shall be demonstrated OPERABLE by performance of the ESFAS Instrumentation Surveillance Requirements specified in Table 4.3-2.

4.3.2.2 The ENGINEERED SAFETY FEATURES RESPONSE TIME of each ESFAS function shall be verified to be within the limit at least once per 18 months. Each verification shall include at least one train such that both trains are verified at least once per 36 months and one channel per function such that all channels are verified at least once every N times 18 months where N is the total number of redundant channels in a specific ESFAS function as shown in the "Total No. of Channels" column of Table 3.3-3.

TABLE 3.3-3

ENGINEERED SAFETY FEATURES ACTUATION SYSTEM INSTRUMENTATION

FUNCTIONAL UNIT	TOTAL NO. OF CHANNELS	CHANNELS TO TRIP	MINIMUM CHANNELS OPERABLE	APPLICABLE MODES	ACTION
1. Safety Injection (Reactor Trip, Feedwater Isolation, Start Diesel Generators, Phase "A" Isolation, Containment Ventilation Isolation, Emergency Feedwater, Service Water to Secondary Component Cooling Water Isolation, CBA Emergency Fan/Filter Actuation, and Latching Relay).					
a. Manual Initiation	2	1	2	1, 2, 3, 4	17
b. Automatic Actuation Logic and Actuation Relays	2	1	2	1, 2, 3, 4	13
c. Containment Pressure--Hi-1	3	2	2	1, 2, 3	18*
d. Pressurizer Pressure--Low	4	2	3	1, 2, 3#	18
e. Steam Line Pressure--Low	3/steam line	2/steam line any steam line	2/steam line	1, 2, 3#	18*

TABLE 3.3-3 (Continued)

ENGINEERED SAFETY FEATURES ACTUATION SYSTEM INSTRUMENTATION

FUNCTIONAL UNIT	TOTAL NO. OF CHANNELS	CHANNELS TO TRIP	MINIMUM CHANNELS OPERABLE	APPLICABLE MODES	ACTION
2. Containment Spray					
a. Manual Initiation	2	1 with 2 coincident switches	2	1, 2, 3, 4	17
b. Automatic Actuation Logic and Actuation Relays	2	1	2	1, 2, 3, 4	13
c. Containment Pressure--Hi-3	4	2	3	1, 2, 3	15
3. Containment Isolation					
a. Phase "A" Isolation					
1) Manual Initiation	2	1	2	1, 2, 3, 4	17
2) Automatic Actuation Logic and Actuation Relays	2	1	2	1, 2, 3, 4	13
3) Safety Injection	See Item 1. above for all Safety Injection initiating functions and requirements.				
b. Phase "B" Isolation					
1) Manual Initiation	2	1 with 2 coincident switches	2	1, 2, 3, 4	17

TABLE 3.3-3 (Continued)

ENGINEERED SAFETY FEATURES ACTUATION SYSTEM INSTRUMENTATION

FUNCTIONAL UNIT	TOTAL NO. OF CHANNELS	CHANNELS TO TRIP	MINIMUM CHANNELS OPERABLE	APPLICABLE MODES	ACTION
3. Containment Isolation (continued)					
b. Phase "B" Isolation (continued)					
2) Automatic Actuation Logic and Actuation Relays	2	1	2	1, 2, 3, 4	13
3) Containment Pressure--Hi-3	4	2	3	1, 2, 3	15
c. Containment Ventilation Isolation					
1) Manual Initiation	2	1	2	1, 2, 3, 4	16
2) Automatic Actuation Logic and Actuation Relays	2	1	2	1, 2, 3, 4	16
3) Safety Injection	See Item 1. above for all Safety Injection initiating functions and requirements.				
4) Containment On Line Purge Radioactivity-High	2	1	2	1, 2, 3, 4	16
4. Steam Line Isolation					
a. Manual Initiation					
1) Individual	1/steam line	1/steam line	1/operating steam line	1, 2, 3	23
2) System	2	1	2	1, 2, 3	21

TABLE 3.3-3 (Continued)

ENGINEERED SAFETY FEATURES ACTUATION SYSTEM INSTRUMENTATION

FUNCTIONAL UNIT	TOTAL NO. OF CHANNELS	CHANNELS TO TRIP	MINIMUM CHANNELS OPERABLE	APPLICABLE MODES	ACTION
4. Steam Line Isolation (continued)					
b. Automatic Actuation Logic and Actuation Relays	2	1	2	1, 2, 3	20
c. Containment Pressure--Hi-2	3	2	2	1, 2, 3	18*
d. Steam Line Pressure-Low	3/steam line	2/steam line any steam line	2/steam line	1, 2, 3#	18*
e. Steam Generator Pressure - Negative Rate-High	3/steam line	2/steam line any steam line	2/steam line	3**	18*
5. Turbine Trip					
a. Automatic Actuation Logic and Actuation Relays	2	1	2	1, 2	22
b. Steam Generator Water Level--High-High (P-14)	4/stm. gen.	2/stm. gen.	3/stm. gen.	1, 2	18
6. Feedwater Isolation					
a. Steam Generator Water Level--High-High (P-14)	4/stm. gen.	2/stm. gen.	3/stm. gen.	1, 2	18
b. Safety Injection	See Item 1. above for all Safety Injection initiating functions and requirements.				

TABLE 3.3-3 (Continued)

ENGINEERED SAFETY FEATURES ACTUATION SYSTEM INSTRUMENTATION

FUNCTIONAL UNIT	TOTAL NO. OF CHANNELS	CHANNELS TO TRIP	MINIMUM CHANNELS OPERABLE	APPLICABLE MODES	ACTION
7. Emergency Feedwater					
a. Manual Initiation					
(1) Motor driven pump	1	1	1	1, 2, 3	21
(2) Turbine driven pump	2	1	2	1, 2, 3	21
b. Automatic Actuation Logic and Actuation Relays	2	1	2	1, 2, 3	20
c. Stm. Gen. Water Level--Low-Low Start Motor-Driven Pump and Start Turbine - Driven Pump	4/stm. gen.	2/stm. gen.	3/stm. gen.	1, 2, 3	18
d. Safety Injection Start Motor-Driven Pump and Turbine-Driven Pump	See Item 1. above for all Safety Injection initiating functions and requirements.				
e. Loss-of-Offsite Power Start Motor-Driven Pump and Turbine-Driven Pump	See Item 9 for Loss-of-Offsite Power initiating functions and requirements.				
8. Automatic Switchover to Containment Sump					
a. Automatic Actuation Logic and Actuation Relays	2	1	2	1, 2, 3, 4	13

TABLE 3.3-3 (Continued)

ENGINEERED SAFETY FEATURES ACTUATION SYSTEM INSTRUMENTATION

FUNCTIONAL UNIT	TOTAL NO. OF CHANNELS	CHANNELS TO TRIP	MINIMUM CHANNELS OPERABLE	APPLICABLE MODES	ACTION
b. RWST Level--Low-Low	4	2	3	1, 2, 3, 4	15
Coincident With: Safety Injection	See Item 1. above for all Safety Injection initiating functions and requirements.				
9. Loss of Power (Start Emergency Feedwater)					
a. 4.16 kV Bus E5 and E6-Loss of Voltage	2/bus	2/bus	1/bus	1, 2, 3, 4	14
b. 4.16 kV Bus E5 and E6-Degraded Voltage Coincident with SI	2/bus	2/bus	1/bus	1, 2, 3, 4	14
	See Item 1. above for all Safety Injection initiating functions and requirements.				
10. Engineered Safety Features Actuation System Interlocks					
a. Pressurizer Pressure, P-11	3	2	2	1, 2, 3	19
b. Reactor Trip, P-4	2	2	2	1, 2, 3	21
c. Steam Generator Water Level, P-14	4/stm. gen.	2/stm. gen.	3/stm. gen.	1, 2, 3	18

TABLE 3.3-3 (Continued)

TABLE NOTATIONS

*The provisions of Specification 3.0.4 are not applicable.

#Trip function may be blocked in this MODE below the P-11 (Pressurizer Pressure Interlock) Setpoint.

**Trip function automatically blocked above P-11 and may be blocked below P-11 when Safety Injection on low steam line pressure is not blocked.

ACTION STATEMENTS

ACTION 13 - With the number of OPERABLE channels one less than the Minimum Channels OPERABLE requirement, be in at least HOT STANDBY within 12 hours and in COLD SHUTDOWN within the following 30 hours; however, one channel may be bypassed for up to 4 hours for surveillance testing per Specification 4.3.2.1, provided the other channel is OPERABLE.

ACTION 14 - With the number of OPERABLE channels one less than the Total Number of Channels, STARTUP and/or POWER OPERATION may proceed provided the following conditions are satisfied:

a. The inoperable channel is placed in the tripped condition within 6 hours, and

b. The Minimum Channels OPERABLE requirements is met; however, the inoperable channel may be bypased for up to 2 hours for surveillance testing of other channels per Specification 4.3.2.1.

ACTION 15 - With the number of OPERABLE channels one less than the Total Number of Channels, operation may proceed provided the inoperable channel is placed in the bypassed condition and the Minimum Channels OPERABLE requirement is met. One additional channel may be bypassed for up to 4 hours for surveillance testing per Specification 4.3.2.1.

ACTION 16 - With less than the Minimum Channels OPERABLE requirement, operation may continue provided the containment purge supply and exhaust valves are maintained closed.

ACTION 17 - With the number of OPERABLE channels one less than the Minimum Channels OPERABLE requirement, restore the inoperable channel to OPERABLE status within 48 hours or be in at least HOT STANDBY within the next 6 hours and in COLD SHUTDOWN within the following 30 hours.

ACTION 18 - With the number of OPERABLE channels one less than the Total Number of Channels, STARTUP and/or POWER OPERATION may proceed provided the following conditions are satisfied:

TABLE 3.3-3 (Continued)

ACTION STATEMENTS (Continued)

a. The inoperable channel is placed in the tripped condition within 6 hours, and

b. The Minimum Channels OPERABLE requirement is met; however, the inoperable channel may be bypassed for up to 4 hours for surveillance testing of other channels per Specification 4.3.2.1.

ACTION 19 - With less than the Minimum Number of Channels OPERABLE, within 1 hour determine by observation of the associated permissive annunciator window(s) that the interlock is in its required state for the existing plant condition, or apply Specification 3.0.3.

ACTION 20 - With the number of OPERABLE channels one less than the Minimum Channels OPERABLE requirement, restore the inoperable channel to OPERABLE status within 6 hours or be in at least HOT STANDBY within the next 6 hours and in at least HOT SHUTDOWN within the following 6 hours; however, one channel may be bypassed for up to 4 hours for surveillance testing per Specification 4.3.2.1 provided the other channel is OPERABLE.

ACTION 21 - With the number of OPERABLE channels one less than the Total Number of Channels, restore the inoperable channel to OPERABLE status within 48 hours or be in at least HOT STANDBY within 6 hours and in at least HOT SHUTDOWN within the following 6 hours.

ACTION 22 - With the number of OPERABLE channels one less than the Minimum Channels OPERABLE requirement, restore the inoperable channel to OPERABLE status within 6 hours or be in at least HOT STANDBY within the next 6 hours; however, one channel may be bypassed for up to 4 hours for surveillance testing per Specification 4.3.2.1 provided the other channel is OPERABLE.

ACTION 23 - With the number of OPERABLE channels one less than the Total Number of Channels, restore the inoperable channel to OPERABLE status within 48 hours or declare the associated valve inoperable and take the ACTION required by Specification 3.7.1.5.

TABLE 3.3-4

ENGINEERED SAFETY FEATURES ACTUATION SYSTEM INSTRUMENTATION TRIP SETPOINTS

FUNCTIONAL UNIT	TOTAL ALLOWANCE (TA)	Z	SENSOR ERROR (S)	TRIP SETPOINT	ALLOWABLE VALUE
1. Safety Injection (Reactor Trip, Feedwater Isolation, Start Diesel Generator, Phase "A" Isolation, Containment Ventilation Isolation, and Emergency Feedwater, Service Water to Secondary Component Cooling Water Isolation, CBA Emergency Fan/Filter Actuation, and Latching Relay).					
a. Manual Initiation	N.A.	N.A.	N.A.	N.A.	N.A.
b. Automatic Actuation Logic	N.A.	N.A.	N.A.	N.A.	N.A.
c. Containment Pressure--Hi-1	4.2	0.71	1.67	≤ 4.3 psig	≤ 5.3 psig
d. Pressurizer Pressure--Low	N.A.	N.A.	N.A.	≥ 1800 psig	≥ 1786 psig
e. Steam Line Pressure--Low	13.1	10.71	1.63	≥ 585 psig	≥ 568 psig*
2. Containment Spray					
a. Manual Initiation	N.A.	N.A.	N.A.	N.A.	N.A.
b. Automatic Actuation Logic and Actuation Relays	N.A.	N.A.	N.A.	N.A.	N.A.
c. Containment Pressure--Hi-3	3.0	0.71	1.67	≤ 18.0 psig	≤ 18.7 psig

TABLE 3.3-4 (Continued)

ENGINEERED SAFETY FEATURES ACTUATION SYSTEM INSTRUMENTATION TRIP SETPOINTS

FUNCTIONAL UNIT	TOTAL ALLOWANCE (TA)	Z	SENSOR ERROR (S)	TRIP SETPOINT	ALLOWABLE VALUE
3. Containment Isolation					
a. Phase "A" Isolation					
1) Manual Initiation	N.A.	N.A.	N.A.	N.A.	N.A.
2) Automatic Actuation Logic and Actuation Relays	N.A.	N.A.	N.A.	N.A.	N.A.
3) Safety Injection	See Item 1. above for all Safety Injection Trip Setpoints and Allowable Values.				
b. Phase "B" Isolation					
1) Manual Initiation	N.A.	N.A.	N.A.	N.A.	N.A.
2) Automatic Actuation Logic and Actuation Relays	N.A.	N.A.	N.A.	N.A.	N.A.
3) Containment Pressure--Hi-3	3.0	0.71	1.67	≤ 18.0 psig	≤ 18.7 psig
c. Containment Ventilation Isolation					
1) Manual Initiation	N.A.	N.A.	N.A.	N.A.	N.A.
2) Automatic Actuation Logic and Actuation Relays	N.A.	N.A.	N.A.	N.A.	N.A.
3) Safety Injection	See Item 1. above for all Safety Injection Trip Setpoints and Allowable Values.				
4) Containment On Line Purge Radioactivity-High	N.A.	N.A.	N.A.	< 2 x Background	N.A.

TABLE 3.3-4 (Continued)

ENGINEERED SAFETY FEATURES ACTUATION SYSTEM INSTRUMENTATION TRIP SETPOINTS

FUNCTIONAL UNIT	TOTAL ALLOWANCE (TA)	Z	SENSOR ERROR (S)	TRIP SETPOINT	ALLOWABLE VALUE
4. Steam Line Isolation					
a. Manual Initiation (System)	N.A.	N.A.	N.A.	N.A.	N.A.
b. Automatic Actuation Logic and Actuation Relays	N.A.	N.A.	N.A.	N.A.	N.A.
c. Containment Pressure--Hi-2	5.2	0.71	1.67	≤4.3 psig	≤5.3 psig
d. Steam Line Pressure--Low	13.1	10.71	1.63	≥585 psig	≥568 psig*
e. Steam Generator Pressure - Negative Rate--High	3.0	0.5	0	≤100 psi	≤123 psi**
5. Turbine Trip					
a. Automatic Actuation Logic Actuation Relays	N.A.	N.A.	N.A.	N.A.	N.A.
b. Steam Generator Water Level--High-High (P-14)	N.A	N.A.	N.A.	≤90.8% of narrow range instrument span.	≤91.3% of narrow range instrument span.
6. Feedwater Isolation					
a. Steam Generator Water Level--Hi-Hi-(P-14)	N.A.	N.A.	N.A.	≤90.8% of narrow range instrument span.	≤91.3% of narrow range instrument span.
b. Safety Injection	N.A.	N.A.	N.A.	N.A.	N.A.

TABLE 3.3-4 (Continued)

ENGINEERED SAFETY FEATURES ACTUATION SYSTEM INSTRUMENTATION TRIP SETPOINTS

FUNCTIONAL UNIT	TOTAL ALLOWANCE (TA)	Z	SENSOR ERROR (S)	TRIP SETPOINT	ALLOWABLE VALUE
7. Emergency Feedwater					
a. Manual Initiation					
(1) Motor driven pump	N.A.	N.A.	N.A.	N.A.	N.A.
(2) Turbine driven pump	N.A.	N.A.	N.A.	N.A.	N.A.
b. Automatic Actuation Logic and Actuation Relays	N.A.	N.A.	N.A.	N.A.	N.A.
c. Steam Generator Water Level--Low-Low Start Motor-Driven Pump and Start Turbine-Driven Pump	N.A.	N.A.	N.A.	≥20.0% of narrow range instrument span.	≥19.5% of narrow range instrument span.
d. Safety Injection Start Motor-Driven Pump and Turbine-Driven Pump	See Item 1. above for all Safety Injection Trip Setpoints and Allowable Values.				
e. Loss-of-Offsite Power Start Motor-Driven Pump and Turbine-Driven Pump	See Item 9. for Loss-of-Offsite Power Setpoints and Allowable Values.				
8. Automatic Switchover to Containment Sump					
a. Automatic Actuation Logic and Actuation Relays	N.A.	N.A.	N.A.	N.A.	N.A.
b. RWST Level –Low-Low Coincident With Safety Injection	4.0*** 2.1**** See Item 1. above for all Safety Injection Trip Setpoints and Allowable Values.	1.0	2.8	120,478 gals.	≤121,521*** gals. ≥119,435**** gals.

TABLE 3.3-4 (Continued)

ENGINEERED SAFETY FEATURES ACTUATION SYSTEM INSTRUMENTATION TRIP SETPOINTS

FUNCTIONAL UNIT	TOTAL ALLOWANCE (TA)	Z	SENSOR ERROR (S)	TRIP SETPOINT	ALLOWABLE VALUE
9. Loss of Power (Start Emergency Feedwater)					
a. 4.16 kV Bus E5 and E6 Loss of Voltage	N.A.	N.A.	N.A.	≥ 2975 volts with a ≤ 1.20 second time delay.	≥ 2908 volts with a ≤ 1.315 second time delay.
b. 4.16 kV Bus E5 and E6 Degraded Voltage	N.A.	N.A.	N.A.	≥ 3933 volts with a ≤ 10 second time delay.	≥ 3902 volts with a ≤ 10.96 second time delay.
Coincident with: Safety Injection	See Item 1. above for all Safety Injection Trip Setpoints and Allowable Values.				
10. Engineered Safety Features Actuation System Interlocks					
a. Pressurizer Pressure, P-11	N.A.	N.A.	N.A.	≤ 1950 psig	≤ 1962 psig
b. Reactor Trip, P-4	N.A.	N.A.	N.A.	N.A.	N.A.
c. Steam Generator Water Level, P-14	See Item 5. above for all Steam Generator Water Level Trip Setpoints and Allowable Values.				

TABLE 3.3-4 (Continued)

TABLE NOTATIONS

*Time constants utilized in the lead-lag controller for Steam Line Pressure-Low are $\tau_1 \geq 50$ seconds and $\tau_2 \leq 5$ seconds. CHANNEL CALIBRATION shall ensure that these time constants are adjusted to these values.

**The time constant utilized in the rate-lag controller for Steam Line Pressure-Negative Rate-High is greater than or equal to 50 seconds. CHANNEL CALIBRATION shall ensure that this time constant is adjusted to this value.

***Value specified applies when "as measured" Trip Setpoint is greater than the specified Trip Setpoint.

****Value specified applies when "as measured" Trip Setpoint is less than the specified Trip Setpoint.

TABLE 3.3-5

(This table number is not used)

TABLE 4.3-2

ENGINEERED SAFETY FEATURES ACTUATION SYSTEM INSTRUMENTATION SURVEILLANCE REQUIREMENTS

CHANNEL FUNCTIONAL UNIT	CHANNEL CHECK	CHANNEL CALIBRATION	ANALOG CHANNEL OPERATIONAL TEST	TRIP ACTUATING DEVICE OPERATIONAL TEST	ACTUATION LOGIC TEST	MASTER RELAY TEST	SLAVE RELAY TEST	MODES FOR WHICH SURVEILLANCE IS REQUIRED
1. Safety Injection (Reactor Trip, Feedwater Isolation, Start Diesel Generator, Phase "A" Isolation, Containment Ventilation Isolation, and Emergency Feedwater, Service Water to Secondary Component Cooling Water Isolation, CBA Emergency Fan/Filter Actuation, and Latching Relay).								
a. Manual Initiation	N.A.	N.A.	N.A.	R	N.A.	N.A.	N.A.	1, 2, 3, 4
b. Automatic Actuation Logic and Actuation Relays	N.A.	N.A.	N.A.	N.A.	M(1)	M(1)	Q	1, 2, 3, 4
c. Containment Pressure-Hi-1	S	R	Q	N.A.	N.A.	N.A.	N.A.	1, 2, 3
d. Pressurizer Pressure Low	S	R	Q	N.A.	N.A.	N.A.	N.A.	1, 2, 3
e. Steam Line Pressure-Low	S	R	Q	N.A.	N.A.	N.A.	N.A.	1, 2, 3
2. Containment Spray								
a. Manual Initiation	N.A.	N.A.	N.A.	R	N.A.	N.A.	N.A.	1, 2, 3, 4
b. Automatic Actuation Logic and Actuation Relays	N.A.	N.A.	N.A.	N.A.	M(1)	M(1)	Q	1, 2, 3, 4
C. Containment Pressure-Hi-3	S	R	Q	N.A.	N.A.	N.A.	N.A.	1, 2, 3

TABLE 4.3-2 (Continued)

ENGINEERED SAFETY FEATURES ACTUATION SYSTEM INSTRUMENTATION
SURVEILLANCE REQUIREMENTS

CHANNEL FUNCTIONAL UNIT	CHANNEL CHECK	CHANNEL CALIBRATION	ANALOG CHANNEL OPERATIONAL TEST	TRIP ACTUATING DEVICE OPERATIONAL TEST	ACTUATION LOGIC TEST	MASTER RELAY TEST	SLAVE RELAY TEST	MODES FOR WHICH SURVEILLANCE IS REQUIRED
3. Containment Isolation								
a. Phase "A" Isolation								
1) Manual Initiation	N.A.	N.A.	N.A.	R	N.A.	N.A.	N.A.	1, 2, 3, 4
2) Automatic Actuation Logic and Actuation Relays	N.A.	N.A.	N.A.	N.A.	M(1)	M(1)	Q	1, 2, 3, 4
3) Safety Injection	See Item 1. above for all Safety Injection Surveillance Requirements.							
b. Phase "B" Isolation								
1) Manual Initiation	N.A.	N.A.	N.A.	R	N.A.	N.A.	N.A.	1, 2, 3, 4
2) Automatic Actuation Logic Actuation Relays	N.A.	N.A.	N.A.	N.A.	M(1)	M(1)	Q	1, 2, 3, 4
3) Containment Pressure-Hi-3	S	R	Q	N.A.	N.A.	N.A.	N.A.	1, 2, 3
c. Containment Ventilation Isolation								
1) Manual Initiation	N.A.	N.A.	N.A.	R	N.A.	N.A.	N.A.	1, 2, 3, 4
2) Automatic Actuation Logic and Actuation Relays	N.A.	N.A.	N.A.	N.A.	M(1)	M(1)	Q	1, 2, 3, 4
3) Safety Injection	See Item 1. above for all Safety Injection Surveillance Requirements.							
4) Containment On Line Purge Radioactivity- High	S	R	Q(2)	N.A.	N.A.	N.A.	N.A.	1, 2, 3, 4

TABLE 4.3-2 (Continued)

ENGINEERED SAFETY FEATURES ACTUATION SYSTEM INSTRUMENTATION
SURVEILLANCE REQUIREMENTS

CHANNEL FUNCTIONAL UNIT	CHANNEL CHECK	CHANNEL CALIBRATION	ANALOG CHANNEL OPERATIONAL TEST	TRIP ACTUATING DEVICE OPERATIONAL TEST	ACTUATION LOGIC TEST	MASTER RELAY TEST	SLAVE RELAY TEST	MODES FOR WHICH SURVEILLANCE IS REQUIRED
4. Steam Line Isolation								
a. Manual Initiation (System)	N.A.	N.A.	N.A.	R	N.A.	N.A.	N.A.	1, 2, 3
b. Automatic Actuation Logic and Actuation Relays	N.A.	N.A.	N.A.	N.A.	M(1)	M(1)	Q	1, 2, 3
c. Containment Pressure-Hi-2	S	R	Q	N.A.	N.A.	N.A.	N.A.	1, 2, 3
d. Steam Line Pressure-Low	S	R	Q	N.A.	N.A.	N.A.	N.A.	1, 2, 3
e. Steam Line Pressure-Negative Rate-High	S	R	Q	N.A.	N.A.	N.A.	N.A.	3
5. Turbine Trip								
a. Automatic Actuation Logic and Actuation Relays	N.A.	N.A.	N.A.	N.A.	M(1)	M(1)	Q	1, 2
b. Steam Generator Water Level-High-High (P-14)	S	R	Q	N.A.	N.A.	N.A.	N.A.	1, 2
6. Feedwater Isolation								
a. Steam Generator Water Level--High-High (P-14)	S	R	Q	N.A.	N.A.	N.A.	N.A.	1, 2
b. Safety Injection	See Item 1. above for all Safety Injection Surveillance Requirements.							
7. Emergency Feedwater								
a. Manual Initiation								
1) Motor-driven pump	N.A.	N.A.	N.A.	R	N.A.	N.A.	N.A.	1, 2, 3
2) Turbine-driven pump	N.A.	N.A.	N.A.	R	N.A.	N.A.	N.A.	1, 2, 3

TABLE 4.3-2 (Continued)

ENGINEERED SAFETY FEATURES ACTUATION SYSTEM INSTRUMENTATION

SURVEILLANCE REQUIREMENTS

CHANNEL FUNCTIONAL UNIT	CHANNEL CHECK	CHANNEL CALIBRATION	ANALOG CHANNEL OPERATIONAL TEST	TRIP ACTUATING DEVICE OPERATIONAL TEST	ACTUATION LOGIC TEST	MASTER RELAY TEST	SLAVE RELAY TEST	MODES FOR WHICH SURVEILLANCE IS REQUIRED
7. Emergency Feedwater (Continued)								
b. Automatic Actuation and Actuation Relays	N.A.	N.A.	N.A.	N.A.	M(1)	M(1)	Q	1, 2, 3
c. Steam Generator Water Level-Low-Low, Start Motor-Driven Pump and Turbine-Driven Pump	S	R	Q	N.A.	N.A.	N.A.	N.A.	1, 2, 3
d. Safety Injection, Start Motor-Driven Pump and Turbine-Driven Pump	See Item 1. above for all Safety Injection Surveillance Requirements.							
e. Loss-of-Offsite Power Start Motor-Driven Pump and Turbine-Driven Pump	See Item 9. for all Loss-of-Offsite Power Surveillance Requirements.							
8. Automatic Switchover to Containment Sump								
a. Automatic Actuation Logic and Actuation Relays	N.A.	N.A.	N.A.	N.A.	M(1)	M(1)	Q	1, 2, 3, 4
b. RWST Level Low-Low Coincident With	N.A.	R	Q	Q(3)	N.A.	N.A.	N.A.	1, 2, 3, 4
Safety Injection	See Item 1. above for all Safety Injection Surveillance Requirements.							

TABLE 4.3-2 (Continued)

ENGINEERED SAFETY FEATURES ACTUATION SYSTEM INSTRUMENTATION
SURVEILLANCE REQUIREMENTS

CHANNEL FUNCTIONAL UNIT	CHANNEL CHECK	CHANNEL CALIBRATION	ANALOG CHANNEL OPERATIONAL TEST	TRIP ACTUATING DEVICE OPERATIONAL TEST	ACTUATION LOGIC TEST	MASTER RELAY TEST	SLAVE RELAY TEST	MODES FOR WHICH SURVEILLANCE IS REQUIRED
9. Loss of Power (Start) Emergency Feedwater)								
a. 4.16 kV Bus E5 and E6 Loss of Voltage	N.A.	R	N.A.	M	N.A.	N.A.	N.A.	1, 2, 3, 4
b. 4.16 kV Bus E5 and E6 Degraded Voltage Coincident With Safety Injection	N.A.	R	N.A.	M	N.A.	N.A.	N.A.	1, 2, 3, 4
	See Item 1. above for all Safety Injection Surveillance Requirements							
10. Engineered Safety Features Actuation System Interlocks								
a. Pressurizer Pressure, P-11	N.A.	R	Q	N.A.	N.A.	N.A.	N.A.	1, 2, 3
b. Reactor Trip, P-4	N.A.	N.A.	N.A.	N.A.	R	N.A.	N.A.	1, 2, 3
c. Steam Generator Water Level, P-14	S	R	Q	N.A.	M(1)	M(1)	Q	1, 2, 3

TABLE NOTATION

(1) Each train shall be tested at least every 62 days on a STAGGERED TEST BASIS.

(2) A DIGITAL CHANNEL OPERATIONAL TEST will be performed on this instrumentation.

(3) Setpoint verification is not applicable.

3/4.3.3 MONITORING INSTRUMENTATION

RADIATION MONITORING FOR PLANT OPERATIONS

LIMITING CONDITION FOR OPERATION

3.3.3.1 The radiation monitoring instrumentation channels for plant operations shown in Table 3.3-6 shall be OPERABLE with their Alarm/Trip Setpoints within the specified limits.

APPLICABILITY: As shown in Table 3.3-6.

ACTION:

a. With a radiation monitoring channel Alarm/Trip Setpoint for plant operations exceeding the value shown in Table 3.3-6, adjust the Setpoint to within the limit within 4 hours or declare the channel inoperable.

b. With one or more radiation monitoring channels for plant operations inoperable, take the ACTION shown in Table 3.3-6.

c. The provisions of Specification 3.0.3 are not applicable.

SURVEILLANCE REQUIREMENTS

4.3.3.1 Each radiation monitoring instrumentation channel for plant operations shall be demonstrated OPERABLE by the performance of the CHANNEL CHECK, CHANNEL CALIBRATION and DIGITAL CHANNEL OPERATIONAL TEST for the MODES and at the frequencies shown in Table 4.3-3.

TABLE 3.3-6
RADIATION MONITORING INSTRUMENTATION FOR PLANT OPERATIONS

FUNCTIONAL UNIT	CHANNELS TO TRIP/ALARM	MINIMUM CHANNELS OPERABLE	APPLICABLE MODES	ALARM/TRIP SETPOINT	ACTION
1. Containment					
a. Containment - Post LOCA - Area Monitor	1	2	All	≤ 10 R/h	27
b. RCS Leakage Detection					
1) Particulate Radioactivity	N.A.	1	1, 2, 3, 4	N.A.	26#
2) Gaseous Radioactivity	N.A.	1	1, 2, 3, 4	N.A.	26#
2. Containment Ventilation Isolation					
a. On Line Purge Monitor	1	2	1, 2, 3, 4	*	23
b. Manipulator Crane Area Monitor	1	2	6##	**	23
3. Main Steam Line	1/steam line	1/steam line	1, 2, 3, 4	N.A.	27
4. Fuel Storage Pool Areas					
a. Fuel Storage Building Exhaust Monitor	N.A.	1	***	****	25
5. Control Room Isolation					
a. Air Intake-Radiation Level					
1) East Air Intake	1/intake	2/intake	All	****	24
2) West Air Intake	1/intake	2/intake	All	****	24
6. Primary Component Cooling Water					
a. Loop A	1	1	All	≤ 2 x Background	28
b. Loop B	1	1	All	≤ 2 x Background	28

TABLE NOTATIONS

*Two times background; purge rate will be verified to ensure compliance with ODCM Control C.7.1.1 requirements
**Two times background or 15 mR/hr, whichever is greater.
***With irradiated fuel in the fuel storage pool areas.
****Two times background or 100 CPM, whichever is greater.
#The provisions of Specification 3.0.4 are not applicable.
##During CORE ALTERATIONS or movements of irradiated fuel within the containment.

TABLE 3.3-6 (Continued)

ACTION STATEMENTS

ACTION 23 - With less than the Minimum Channels OPERABLE requirement, operation may continue provided the containment ventilation isolation valves are maintained closed.

ACTION 24 - With the number of OPERABLE channels one less than the Minimum Channels OPERABLE requirement, within 1 hour initiate and maintain operation of the Control Room Emergency Ventilation System in the recirculation mode of operation.

ACTION 25 - With less than the Minimum Channels OPERABLE requirement, operation may continue for up to 30 days provided an appropriate portable continuous monitor with the same Alarm Setpoint is provided in the fuel storage pool area. Restore the inoperable monitors to OPERABLE status within 30 days or suspend all operations involving fuel movement in the fuel storage pool areas.

ACTION 26 - Must satisfy the ACTION requirement for Specification 3.4.6.1.

ACTION 27 - With the number of OPERABLE Channels less than the Minimum Channels OPERABLE requirement, initiate the preplanned alternate method of monitoring the appropriate parameter(s), within 72 hours, and:

1) either restore the inoperable Channel(s) to OPERABLE status within 7 days of the event, or

2) prepare and submit a Special Report to the Commission pursuant to Specification 6.8.2 within 14 days following the event outlining the actions taken, the cause of the inoperability and the plans and schedule for restoring the system to OPERABLE status.

ACTION 28 - With the number of OPERABLE Channels less than the Minimum Channels OPERABLE requirement, collect grab samples daily from the Primary Component Cooling Water System and the Service Water System and analyze the radioactivity until the inoperable Channel(s) is restored to OPERABLE status.

TABLE 4.3-3

RADIATION MONITORING INSTRUMENTATION FOR PLANT OPERATIONS SURVEILLANCE REQUIREMENTS

FUNCTIONAL UNIT	CHANNEL CHECK	CHANNEL CALIBRATION	DIGITAL CHANNEL OPERATIONAL TEST	MODES FOR WHICH SURVEILLANCE IS REQUIRED
1. Containment				
a. Containment - Post LOCA - Area Monitor	S	R	Q	All
b. RCS Leakage Detection				
1) Particulate Radioactivity	S	R	Q	1, 2, 3, 4
2) Gaseous Radioactivity	S	R	Q	1, 2, 3, 4
2. Containment Ventilation Isolation				
a. On Line Purge Monitor	S	R	Q	1, 2, 3, 4
b. Manipulator Crane Area Monitor	S	R	Q	6#
3. Main Steam Line	S	R	Q	1, 2, 3, 4
4. Fuel Storage Pool Areas				
a. Radioactivity-High-Gaseous Radioactivity	S	R	Q	*
5. Control Room Isolation				
a. Air Intake Radiation Level				
1) East Air Intake	S	R	Q	All
2) West Air Intake	S	R	Q	All
6. Primary Component Cooling Water				
a. Loop A	S	R	Q	All
b. Loop B	S	R	Q	All

TABLE NOTATIONS

* With irradiated fuel in the fuel storage pool areas.
# During CORE ALTERNATIONS or movement of irradiated fuel within the containment.

3.3.3.2 (THIS SPECIFICATION NUMBER IS NOT USED)

3.3.3.3 (THIS SPECIFICATION NUMBER IS NOT USED)

TABLE 3.3-7

(THIS TABLE NUMBER IS NOT USED)

TABLE 4.3-4

(THIS TABLE NUMBER IS NOT USED)

3.3.3.4 (THIS SPECIFICATION NUMBER IS NOT USED)

TABLE 3.3-8

(THIS TABLE NUMBER IS NOT USED)

REMOTE SHUTDOWN SYSTEM

LIMITING CONDITION FOR OPERATION

3.3.3.5 The Remote Shutdown System transfer switches, power, controls and monitoring instrumentation channels shown in Table 3.3-9 shall be OPERABLE.

APPLICABILITY: MODES 1, 2, and 3.

ACTION:

a. With the number of OPERABLE remote shutdown monitoring channels less than the Minimum Channels OPERABLE as required by Table 3.3-9, restore the inoperable channel(s) to OPERABLE status within 7 days, or be in HOT SHUTDOWN within the next 12 hours. The provisions of Specification 3.0.4 are not applicable.

b. With the number of OPERABLE remote shutdown monitoring channels less than the Total Number of Channels as required by Table 3.3-9, within 60 days restore the inoperable channel(s) to OPERABLE status or, pursuant to Specification 6.8.2, submit a Special Report that defines the corrective action to be taken.

c. With one or more Remote Shutdown System transfer switches, power, or control circuits inoperable, restore the inoperable switch(s) / circuit(s) to OPERABLE status within 7 days, or be in HOT STANDBY within the next 12 hours. The provisions of Specification 3.0.4 are not applicable.

SURVEILLANCE REQUIREMENTS

4.3.3.5.1 Each remote shutdown monitoring instrumentation channel in Table 3.3-9 shall be demonstrated OPERABLE:

a. Every 31 days by performance of a CHANNEL CHECK, and

b. Every 18 months by performance of a CHANNEL CALIBRATION.

4.3.3.5.2 Each Remote Shutdown System transfer switch, power and control circuit listed in Table 3.3-9, including the actuated components, shall be demonstrated OPERABLE at least once per 18 months.

TABLE 3.3-9

REMOTE SHUTDOWN SYSTEM

INSTRUMENT	LOCATION	TOTAL NO. OF CHANNELS	MINIMUM CHANNELS OPERABLE
1. Intermediate Range Neutron Flux	CP-108 A and B	2	1
2. Source Range Neutron Flux	CP-108 A and B	2	1
3. Reactor Coolant Temperature - Wide Range for Loops 1 and 4			
a. T_C	CP-108 A and B	2	2
b. T_H	CP-108 A and B	2	2
4. Pressurizer Pressure	CP-108 A and B	2	2
5. Pressurizer Level	CP-108 A and B	2	2
6. Steam Generator Pressure	CP-108 A and B	1/stm. gen.	1/stm. gen.
7. Steam Generator Water Level	CP-108 A and B	1/stm. gen.	1/stm. gen.
8. Steam Generator-Emergency Feedwater Flow Rate	CP-108 A and B	1/stm. gen.	1/stm. gen.
9. Boric Acid Tank Level	CP-108 A and B	1/tank	1/tank

TRANSFER SWITCHES/CONTROL CIRCUITS	LOCATION
1. Emergency Feedwater Pump Steam Supply Valves MS-V-393/127	CP-108 A
2. Emergency Feedwater Pump Steam Supply Valves MS-V-394/128	CP-108 B
3. Emergency Feedwater Pump Steam Supply Valves MS-V-395	CP-108 A and B
4. Emergency Feedwater Pump FW-P-37B	Bus 6 SWGR
5. Emergency Feedwater Recirculation Valve FW-V-346	CP-108 A
6. Emergency Feedwater Recirculation Valve FW-V-347	CP-108 B
7. SG A EFW Control Valve FW-FV-4214 A	CP-108 A
8. SG A EFW Control Valve FW-FV-4214 B	CP-108 B
9. SG B EFW Control Valve FW-FV-4224 A	CP-108 A
10. SG B EFW Control Valve FW-FV-4224 B	CP-108 B
11. SG C EFW Control Valve FW-FV-4234 A	CP-108 A
12. SG C EFW Control Valve FW-FV-4234 B	CP-108 B
13. SG D EFW Control Valve FW-FV-4244 A	CP-108 A
14. SG D EFW Control Valve FW-FV-4244 B	CP-108 B
15. SG A Atmospheric Relief Valve MS-PV-3001	CP-108 A
16. SG B Atmospheric Relief Valve MS-PV-3002	CP-108 B
17. SG C Atmospheric Relief Valve MS-PV-3003	CP-108 A

TABLE 3.3-9 (Continued)

REMOTE SHUTDOWN SYSTEM

TRANSFER SWITCHES/CONTROL CIRCUITS	LOCATION
18. SG D Atmospheric Relief Valve MS-PV-3004	CP-108 B
19. MS Isolation Valves MS-V-86/88/90/92	CP-108 A
20. MS Isolation Valves MS-V-86/88/90/92	CP-108 B
21. Pressurizer Heaters, Group A	CP-108 A
22. Pressurizer Heaters, Group B	CP-108 B
23. Charging Pump CS-P-2A	BUS 5 SWGR
24. Charging Pump CS-P-2B	BUS 6 SWGR
25. Charging Pump Suction from RWST CS-LCV-112D	CP-108 A
26. Charging Pump Suction from RWST CS-LCV-112E	CP-108 B
27. Pressurizer Relief Valve (PORV) RC-PCV-456A	CP-108 A
28. Pressurizer Relief Valve (PORV) RC-PCV-456B	CP-108 B
29. PORV Block Valve RC-V-122	CP-108 A
30. PORV Block Valve RC-V-124	CP-108 B
31. High Pressure Injection SI-V-138	CP-108 A
32. High Pressure Injection SI-V-139	CP-108 B
33. VCT Discharge Isolation Valve CS-LCV-112B	CP-108 A
34. VCT Discharge Isolation Valve CS-LCV-112C	CP-108 B

ACCIDENT MONITORING INSTRUMENTATION

LIMITING CONDITION FOR OPERATION

3.3.3.6 The accident monitoring instrumentation channels shown in Table 3.3-10 shall be OPERABLE.

APPLICABILITY: MODES 1, 2, and 3.

NOTE

A separate ACTION entry is allowed for each INSTRUMENT listed in Table 3.3-10.

ACTION:

a. With the number of OPERABLE accident monitoring instrumentation channels less than the Total Number of Channels shown in Table 3.3-10, restore the inoperable channel(s) to OPERABLE status within 30 days, or submit a Special Report to the Commission pursuant to Specification 6.8.2 within the next 14 days outlining the preplanned alternate method of monitoring, the cause of the inoperability, and the plans and schedule for restoring the instrumentation to OPERABLE status.

b. With the number of OPERABLE accident monitoring instrumentation channels except the containment POST-LOCA high range area monitor, less than the Minimum Channels OPERABLE requirements of Table 3.3-10, restore the inoperable channel(s) to OPERABLE status within 7 days or be in at least HOT STANDBY within the next 6 hours and in at least HOT SHUTDOWN within the following 6 hours. The provisions of Specification 3.0.4 are not applicable.

c. With the number of OPERABLE channels for the containment Post-LOCA high range area monitor less than required by the Minimum Channels OPERABLE requirements, initiate an alternate method of monitoring the appropriate parameter(s), within 72 hours, and either restore the inoperable channel(s) to OPERABLE status within 7 days or prepare and submit a Special Report to the Commission, pursuant to Specification 6.8.2, within 14 days that provides actions taken, cause of the inoperability, and the plans and schedule for restoring the channels to OPERABLE status.

4.3.3.6 Each accident monitoring instrumentation channel shall be demonstrated OPERABLE:

a. Every 31 days by performance of a CHANNEL CHECK, and
b. Every 18 months by performance of a CHANNEL CALIBRATION.

TABLE 3.3-10

ACCIDENT MONITORING INSTRUMENTATION

INSTRUMENT	TOTAL NO. OF CHANNELS	MINIMUM CHANNELS OPERABLE
1. Containment Pressure		
a. Normal Range	2	1
b. Extended Range	2	1
2. Reactor Coolant Outlet Temperature - T_{HOT} (Wide Range)	4	2
3. Reactor Coolant Inlet Temperature - T_{COLD} (Wide Range)	4	2
4. Reactor Coolant Pressure - Wide Range	2	1
5. Pressurizer Water Level	2	1
6. Steam Generator Pressure	2/steam generator	1/steam generator
7. Steam Generator Water Level - Narrow Range	1/steam generator	1/steam generator
8. Steam Generator Water Level - Wide Range	1/steam generator	1/steam generator
9. Refueling Water Storage Tank Water Level	2	1
10. Reactor Coolant System Subcooling Margin Monitor	2	1
11. Containment Building Water Level	2	1
12. Core Exit Thermocouples	4/core quadrant	2/core quadrant
13. Containment Post-LOCA Area Monitor	2	1

TABLE 3.3-10 (Continued)

ACCIDENT MONITORING INSTRUMENTATION

INSTRUMENT	TOTAL NO. OF CHANNELS	MINIMUM CHANNELS OPERABLE
14. Intermediate Range Neutron Flux	2	1
15. Intermediate Range Neutron Flux Rate	2	1
16. Containment Isolation Valve Position*	2/Penetration	1/Penetration
17. Containment Enclosure Negative Pressure	2	1
18. Condensate Storage Tank Water Level**	2	1
19. Reactor Vessel Level Indication System	2	1
20 Containment Sump Isolation Valve Position***	2 (1 per valve)	1

*Applies to penetrations with 2 active valves in series. These valves are moved to the closed position by automatic signals.

**Calculated on basis of pressure sensed at suction to the Emergency Feedwater Pumps.

***Applies to CBS-V8 and CBS-V14 open indication on UL indicators.

LIMITING CONDITION FOR OPERATION

3.3.3.7 (This specification number is not used.)

TABLE 3.3-11

(This table number is not used)

LIMITING CONDITION FOR OPERATION

3.3.3.8 (This specification number is not used).

LIMITING CONDITION FOR OPERATION

3.3.3.9 (THIS SPECIFICATION NUMBER IS NOT USED)

TABLE 3.3-12

(THIS TABLE NUMBER IS NOT USED)

TABLE 3.3-12 (Continued)

ACTION STATEMENTS

(THIS TABLE NUMBER IS NOT USED)

TABLE 4.3-5

(THIS TABLE NUMBER IS NOT USED)

TABLE 4.3-5 (Continued)

TABLE NOTATIONS

(THIS TABLE NUMBER IS NOT USED)

EXPLOSIVE GAS MONITORING INSTRUMENTATION

LIMITING CONDITION FOR OPERATION

3.3.3.10 The explosive gas monitoring instrumentation channels shown in Table 3.3-13 shall be OPERABLE with their Alarm/Trip Setpoints set to ensure that the limits of Specification 3.11.2.5 are not exceeded.

APPLICABILITY: As shown in Table 3.3-13.

ACTION:

a. With an explosive gas monitoring instrumentation channel Alarm/Trip Setpoint less conservative than required by the above specification declare the channel inoperable and take the ACTION shown in Table 3.3-13.

b. With the number of OPERABLE explosive gas monitoring instrumentation channels less than the Minimum Channels OPERABLE, take the ACTION shown in Table 3.3-13. Restore the inoperable instrumentation to OPERABLE status within 30 days or, if unsuccessful, prepare and submit a Special Report to the Commission pursuant to Specification 6.8.2 to explain why this inoperability was not corrected in a timely manner.

c. The provisions of Specification 3.0.3 and 3.0.4 are not applicable.

SURVEILLANCE REQUIREMENTS

4.3.3.10 Each explosive gas monitoring instrumentation channel shall be demonstrated OPERABLE by performance of the CHANNEL CHECK, CHANNEL CALIBRATION and CHANNEL OPERATIONAL TEST at the frequencies shown in Table 4.3-6.

TABLE 3.3-13

EXPLOSIVE GAS MONITORING INSTRUMENTATION

INSTRUMENT	MINIMUM CHANNELS OPERABLE	APPLICABILITY	ACTION
1. RADIOACTIVE GAS WASTE SYSTEM EXPLOSIVE GAS MONITORING SYSTEM			
Oxygen Monitor (Process)	1	**	34

TABLE 3.3-13 (Continued)

EXPLOSIVE GAS MONITORING INSTRUMENTATION

(THIS PAGE INTENTIONALLY BLANK)

TABLE 3.3-13 (Continued)

TABLE NOTATIONS

* (NOT USED)

** During GASEOUS RADWASTE TREATMENT SYSTEM operation.

*** (NOT USED)

(NOT USED)

ACTION STATEMENTS

ACTION 32 - (NOT USED)

ACTION 33 - (NOT USED)

ACTION 34 - With the number of channels OPERABLE less than the Minimum Channels OPERABLE requirement, operation of this RADIOACTIVE GAS WASTE SYSTEM may continue provided grab samples are collected at least once per 4 hours and analyzed within the following 4 hours.

ACTION 35 - (NOT USED)

TABLE 4.3-6

EXPLOSIVE GAS MONITORING INSTRUMENTATION SURVEILLANCE REQUIREMENTS

INSTRUMENT	CHANNEL CHECK	SOURCE CHECK	CHANNEL CALIBRATION	CHANNEL OPERATIONAL TEST	MODES FOR WHICH SURVEILLANCE IS REQUIRED
1. RADIOACTIVE GAS WASTE SYSTEM EXPLOSIVE GAS MONITORING SYSTEM					
Oxygen Monitor (Process)	D	N.A.	Q(4)	M	**

TABLE 4.3-6 (Continued)

EXPLOSIVE GAS MONITORING INSTRUMENTATION SURVEILLANCE REQUIREMENTS

(THIS PAGE INTENTIONALLY BLANK)

TABLE 4.3-6 (Continued)

TABLE NOTATIONS

* (NOT USED)

** During RADIOACTIVE WASTE GAS SYSTEM operation.

*** (NOT USED)

**** (NOT USED)

\# (NOT USED)

(1) (NOT USED)

(2) (NOT USED)

(3) (NOT USED)

(4) The CHANNEL CALIBRATION shall include the use of standard gas samples containing a nominal:

a. One volume percent oxygen, balance nitrogen, and

b. Four volume percent oxygen, balance nitrogen.

(5) (NOT USED)

3/4.3.4 (THIS SPECIFICATION NUMBER IS NOT USED)

3/4.4 REACTOR COOLANT SYSTEM

3/4.4.1 REACTOR COOLANT LOOPS AND COOLANT CIRCULATION

STARTUP AND POWER OPERATION

LIMITING CONDITION FOR OPERATION

3.4.1.1 All reactor coolant loops shall be in operation.

APPLICABILITY: MODES 1 and 2.

ACTION:

With less than the above required reactor coolant loops in operation, be in at least HOT STANDBY within 6 hours.

SURVEILLANCE REQUIREMENTS

4.4.1.1 The above required reactor coolant loops shall be verified in operation and circulating reactor coolant at least once per 12 hours.

REACTOR COOLANT LOOPS AND COOLANT CIRCULATION

HOT STANDBY

LIMITING CONDITION FOR OPERATION

3.4.1.2 At least two reactor coolant loops shall be OPERABLE with two reactor coolant loops in operation when the Control Rod Drive System is capable of rod withdrawal and one reactor coolant loop in operation when the Control Rod Drive System is not capable of rod withdrawal.*

APPLICABILITY: MODE 3.

ACTION:

a. With less than two reactor coolant loops OPERABLE, restore the required loops to OPERABLE status within 72 hours or be in HOT SHUTDOWN within the next 12 hours.

b. With only one reactor coolant loop in operation and the Control Rod Drive System is capable of rod withdrawal, within 1 hour return the required reactor coolant loop to operation or place the Control Rod Drive System in a condition incapable or rod withdrawal.

c. With no reactor coolant loop in operation, place the Control Rod Drive System in a condition incapable of rod withdrawal, and suspend all operations involving a reduction in boron concentration of the Reactor Coolant System and immediately initiate corrective action to return the required reactor coolant loop to operation.

*All reactor coolant pumps may be deenergized for up to 1 hour per 8 hour period provided: (1) no operations are permitted that would cause dilution of the Reactor Coolant System boron concentration, and (2) core outlet temperature is maintained at least 10°F below saturation temperature.

SURVEILLANCE REQUIREMENTS

4.4.1.2.1 At least the above required reactor coolant pumps, shall be determined OPERABLE once per 7 days by verifying correct breaker alignments and indicated power availability*.

4.4.1.2.2 The required steam generators shall be determined OPERABLE by verifying secondary side water level to be greater than or equal to 14% at least once per 12 hours.

4.4.1.2.3 The required reactor coolant loops shall be verified in operation and circulating reactor coolant at least once per 12 hours.

*Not required to be performed until 24 hours after a required pump is not in operation.

LIMITING CONDITION FOR OPERATION

3.4.1.3 At least two of the loops listed below shall be OPERABLE and at least one of these loops shall be in operation:*

a. Reactor Coolant Loop A and its associated steam generator and reactor coolant pump,**

b. Reactor Coolant Loop B and its associated steam generator and reactor coolant pump,**

c. Reactor Coolant Loop C and its associated steam generator and reactor coolant pump,**

d. Reactor Coolant Loop D and its associated steam generator and reactor coolant pump,**

e. RHR Loop A, and

f. RHR Loop B.

APPLICABILITY: MODE 4.

ACTION:

a. With less than the above required loops OPERABLE, immediately initiate corrective action to return the required loops to OPERABLE status as soon as possible; if the remaining OPERABLE loop is an RHR loop, be in COLD SHUTDOWN within 24 hours.

b. With no loop in operation, suspend all operations involving a reduction in boron concentration of the Reactor Coolant System and immediately initiate corrective action to return the required loop to operation.

*All reactor coolant pumps and RHR pumps may be deenergized for up to 1 hour provided: (1) no operations are permitted that would cause dilution of the Reactor Coolant System boron concentration and (2) core outlet temperature is maintained at least 10°F below saturation temperature.

**A reactor coolant pump shall not be started unless the secondary water temperature of each steam generator is less than 50°F above each of the Reactor Coolant System cold-leg temperatures.

SURVEILLANCE REQUIREMENTS

4.4.1.3.1 The required reactor coolant pump(s), if not in operation, shall be determined OPERABLE once per 7 days by verifying correct breaker alignments and indicated power availability.

4.4.1.3.2 The required steam generator(s) shall be determined OPERABLE by verifying secondary-side water level to be greater than or equal to 14% at least once per 12 hours.

4.4.1.3.3 At least one reactor coolant or RHR loop shall be verified in operation and circulating reactor coolant at least once per 12 hours.

COLD SHUTDOWN - LOOPS FILLED

LIMITING CONDITION FOR OPERATION

3.4.1.4.1 At least one residual heat removal (RHR) loop shall be OPERABLE and in operation*, and either:

a. One additional RHR loop shall be OPERABLE**, or

b. The secondary-side water level of at least two steam generators shall be greater than 14%.

APPLICABILITY: MODE 5 with reactor coolant loops filled***.

ACTION:

a. With one of the RHR loops inoperable and with less than the required steam generator water level, immediately initiate corrective action to return the inoperable RHR loop to OPERABLE status or restore the required steam generator water level as soon as possible.

b. With no RHR loop in operation, suspend all operations involving a reduction in boron concentration of the Reactor Coolant System and immediately initiate corrective action to return the required RHR loop to operation.

SURVEILLANCE REQUIREMENTS

4.4.1.4.1.1 The secondary side water level of at least two steam generators when required shall be determined to be within limits at least once per 12 hours.

4.4.1.4.1.2 At least one RHR loop shall be determined to be in operation and circulating reactor coolant at least once per 12 hours.

---

*The RHR pump may be deenergized for up to 1 hour provided: (1) no operations are permitted that would cause dilution of the Reactor Coolant System boron concentration and (2) core outlet temperature is maintained at least 10°F below saturation temperature.

**One RHR loop may be inoperable for up to 2 hours for surveillance testing provided the other RHR loop is OPERABLE and in operation.

***A reactor coolant pump shall not be started unless the secondary water temperature of each steam generator is less than 50°F above each of the Reactor Coolant System cold-leg temperatures.

COLD SHUTDOWN - LOOPS NOT FILLED

LIMITING CONDITION FOR OPERATION

3.4.1.4.2 Two residual heat removal (RHR) loops shall be OPERABLE* and at least one RHR loop shall be in operation.**

APPLICABILITY: MODE 5 with reactor coolant loops not filled.

ACTION:

a. With less than the above required RHR loops OPERABLE, immediately initiate corrective action to return the required RHR loops to OPERABLE status as soon as possible.

b. With no RHR loop in operation, suspend all operations involving a reduction in boron concentration of the Reactor Coolant System and immediately initiate corrective action to return the required RHR loop to operation.

SURVEILLANCE RQUIREMENTS

4.4.1.4.2 At least one RHR loop shall be determined to be in operation and circulating reactor coolant at least once per 12 hours.

*One RHR loop may be inoperable for up to 2 hours for surveillance testing provided the other RHR loop is OPERABLE and in operation.

**The RHR pump may be deenergized for up to 1 hour provided: (1) no operations are permitted that would cause dilution of the Reactor Coolant System boron concentration and (2) core outlet temperature is maintained at least 10°F below saturation temperature.

3/4.4.2 SAFETY VALVES

SHUTDOWN

LIMITING CONDITION FOR OPERATION

3.4.2.1 A minimum of one pressurizer Code safety valve shall be OPERABLE with a lift setting* of 2485 psig ± 3%.**

APPLICABILITY: MODES 4 and 5.

ACTION:

With no pressurizer Code safety valve OPERABLE, immediately suspend all operations involving positive reactivity changes and place an OPERABLE RHR loop into operation in the shutdown cooling mode.

SURVEILLANCE REQUIREMENTS

4.4.2.1 No additional requirements other than those required by Specification 4.0.5.

*The lift setting pressure shall correspond to ambient conditions of the valve at nominal operating temperature and pressure.
**Within ±1% following pressurizer Code safety valve testing.

SAFETY VALVES

OPERATING

LIMITING CONDITION FOR OPERATION

3.4.2.2 All pressurizer Code safety valves shall be OPERABLE with a lift setting* of 2485 psig ± 3%.**

APPLICABILITY: MODES 1, 2, and 3#.

ACTION:

With one pressurizer Code safety valve inoperable, either restore the inoperable valve to OPERABLE status within 15 minutes or be in at least HOT STANDBY within 6 hours and in at least HOT SHUTDOWN within the following 6 hours.

SURVEILLANCE REQUIREMENTS

4.4.2.2 No additional requirements other than those required by Specification 4.0.5.

*The lift setting pressure shall correspond to ambient conditions of the valve at nominal operating temperature and pressure.

**Within ±1% following pressurizer Code safety valve testing.

#Entry into this MODE is permitted for up to 24 hours to perform post-modification or post-maintenance testing to verify OPERABILITY of components. ACTION requirements shall not apply until OPERABILITY has been verified.

3/4.4.3 PRESSURIZER

LIMITING CONDITION FOR OPERATION

3.4.3 The pressurizer shall be OPERABLE with a water volume of less than or equal to 92% of pressurizer level (1656 cubic feet), and at least two groups of pressurizer heaters each having a capacity of at least 150 kW and capable of being powered from an emergency power supply.

APPLICABILITY: MODES 1, 2, and 3.

ACTION:

a. With only one group of pressurizer heaters OPERABLE, restore at least two groups to OPERABLE status within 72 hours or be in at least HOT STANDBY within the next 6 hours and in HOT SHUTDOWN within the following 6 hours.

b. With the pressurizer otherwise inoperable, fully insert all rods, place the Control Rod Drive System in a condition incapable of rod withdrawal, and be in at least HOT STANDBY within 6 hours and in HOT SHUTDOWN within the following 6 hours.

SURVEILLANCE REQUIREMENTS

4.4.3.1 The pressurizer water volume shall be determined to be within its limit at least once per 12 hours.

4.4.3.2 The capacity of each of the above required groups of pressurizer heaters shall be verified by energizing the heaters from the emergency power supply and measuring circuit current at least once each refueling interval.

3/4.4.4 RELIEF VALVES

LIMITING CONDITION FOR OPERATION

3.4.4 Both power-operated relief valves (PORVs) and their associated block valves shall be OPERABLE.

APPLICABILITY: MODES 1, 2, and 3.

ACTION:

a. With one or both PORV(s) inoperable, because of excessive seat leakage, within 1 hour either restore the PORV(s) to OPERABLE status or close the associated block valve(s) with power maintained to the block valve(s); otherwise, be in at least HOT STANDBY within the next 6 hours and in HOT SHUTDOWN within the following 6 hours.

b. With one PORV inoperable due to causes other than excessive seat leakage, within 1 hour either restore the PORV to OPERABLE status or close the associated block valve and remove power from the block valve; restore the PORV to OPERABLE status within the following 72 hours or be in HOT STANDBY within the next 6 hours and in HOT SHUTDOWN within the following 6 hours.

c. With both PORVs inoperable due to causes other than excessive seat leakage, within 1 hour either restore at least one PORV to OPERABLE status or close each associated block valve and remove power from the block valve and be in HOT STANDBY within the next 6 hours and HOT SHUTDOWN within the following 6 hours.

d. With one or both block valves inoperable, within 1 hour restore the block valve(s) to OPERABLE status or place its associated PORV(s) control switch to "CLOSE". Restore at least one block valve to OPERABLE status within the next hour if both block valves are inoperable; restore any remaining inoperable block valve to operable status within 72 hours; otherwise, be in at least HOT STANDBY within the next 6 hours and in HOT SHUTDOWN within the following 6 hours.

e. The provisions of Specification 3.0.4 are not applicable.

SURVEILLANCE REQUIREMENTS

4.4.4.1 In addition to the requirements of Specification 4.0.5, each PORV shall be demonstrated OPERABLE at least once per 18 months by:

a. Performance of a CHANNEL CALIBRATION, and

b. Operating the valve through one complete cycle of full travel during MODES 3 or 4.

4.4.4.2 Each block valve shall be demonstrated OPERABLE at least once per 92 days by operating the valve through one complete cycle of full travel unless the block valve is closed with power removed in order to meet the requirements of ACTION b. or c. in Specification 3.4.4.

3/4.4.5 STEAM GENERATORS

LIMITING CONDITION FOR OPERATION

3.4.5 Each steam generator shall be OPERABLE.

APPLICABILITY: MODES 1, 2, 3, and 4.

ACTION:

With one or more steam generators inoperable, restore the inoperable generator(s) to OPERABLE status prior to increasing T_{avg} above 200°F.

SURVEILLANCE REQUIREMENTS

4.4.5.0 Each steam generator shall be demonstrated OPERABLE by performance of the following augmented inservice inspection program and the requirements of Specification 4.0.5.

4.4.5.1 Steam Generator Sample Selection and Inspection - Each steam generator shall be determined OPERABLE during shutdown by selecting and inspecting at least the minimum number of steam generators specified in Table 4.4-1.

4.4.5.2 Steam Generator Tube Sample Selection and Inspection - The steam generator tube minimum sample size, inspection result classification, and the corresponding action required shall be as specified in Table 4.4-2. The inservice inspection of steam generator tubes shall be performed at the frequencies specified in Specification 4.4.5.3 and the inspected tubes shall be verified acceptable per the acceptance criteria of Specification 4.4.5.4. The tubes selected for each inservice inspection shall include at least 3% of the total number of tubes in all steam generators; the tubes selected for these inspections shall be selected on a random basis except:

a. Where experience in similar plants with similar water chemistry indicates critical areas to be inspected, then at least 50% of the tubes inspected shall be from these critical areas;

b. The first sample of tubes selected for each inservice inspection (subsequent to the preservice inspection) of each steam generator shall include:

SURVEILLANCE REQUIREMENTS

4.4.5.2b. (Continued)

1) All nonplugged tubes that previously had detectable wall penetrations (greater than 20%),

2) Tubes in those areas where experience has indicated potential problems, and

3) A tube inspection (pursuant to Specification 4.4.5.4a.8) shall be performed on each selected tube. If any selected tube does not permit the passage of the eddy current probe for a tube inspection, this shall be recorded and an adjacent tube shall be selected and subjected to a tube inspection.

c. The tubes selected as the second and third samples (if required by Table 4.4-2) during each inservice inspection may be subjected to a partial tube inspection provided:

1) The tubes selected for these samples include the tubes from those areas of the tube sheet array where tubes with imperfections were previously found, and

2) The inspections include those portions of the tubes where imperfections were previously found.

The results of each sample inspection shall be classified into one of the following three categories:

Category	Inspection Results
C-1	Less than 5% of the total tubes inspected are degraded tubes and none of the inspected tubes are defective.
C-2	One or more tubes, but not more than 1% of the total tubes inspected, are defective, or between 5% and 10% of the total tubes inspected are degraded tubes.
C-3	More than 10% of the total tubes inspected are degraded tubes or more than 1% of the inspected tubes are defective.

Note: In all inspections, previously degraded tubes must exhibit significant (greater than 10%) further wall penetrations to be included in the above percentage calculations.

SURVEILLANCE REQUIREMENTS

4.4.5.3 Inspection Frequencies - The above required inservice inspections of steam generator tubes shall be performed at the following frequencies:

a. The first inservice inspection shall be performed after 6 Effective Full-Power Months but no later than restart after first refueling. Subsequent inservice inspections shall be performed at intervals of not less than 12 nor more than 24 calendar months after the previous inspection. If two consecutive inspections, not including the preservice inspection, result in all inspection results falling in Category C-1 or if two consecutive inspections demonstrate that previously observed degradation has not continued and no additional degradation has occurred, the inspection interval may be extended to a maximum of once per 40 months;

b. If the results of the inservice inspection of a steam generator conducted in accordance with Table 4.4-2 at 40-month intervals fall in Category C-3, the inspection frequency shall be increased to at least once per 20 months. The increase in inspection frequency shall apply until the subsequent inspections satisfy the criteria of Specification 4.4.5.3a.; the interval may then be extended to a maximum of once per 40 months; and

c. Additional, unscheduled inservice inspections shall be performed on each steam generator in accordance with the first sample inspection specified in Table 4.4-2 during the shutdown subsequent to any of the following conditions:

   1) Primary-to-secondary tubes leak (not including leaks originating from tube-to-tubesheet welds) in excess of the limits of Specification 3.4.6.2, or

   2) A seismic occurrence greater than the Operating Basis Earthquake, or

   3) A loss-of-coolant accident requiring actuation of the Engineered Safety Features, or

   4) A main steam line or feedwater line break.

SURVEILLANCE REQUIREMENTS

4.4.5.4 Acceptance Criteria

a. As used in this specification:

1) Imperfection means an exception to the dimensions, finish, or contour of a tube from that required by fabrication drawings or specifications. Eddy-current testing indications below 20% of the nominal tube wall thickness, if detectable, may be considered as imperfections;

2) Degradation means a service-induced cracking, wastage, wear, or general corrosion occurring on either the inside or outside of a tube;

3) Degraded Tube means a tube containing imperfections greater than or equal to 20% of the nominal wall thickness caused by degradation;

4) % Degradation means the percentage of the tube wall thickness affected or removed by degradation;

5) Defect means an imperfection of such severity that it exceeds the plugging limit. A tube containing a defect is defective;

6) Plugging Limit means the imperfection depth at or beyond which the tube shall be removed from service and is equal to 40% of the nominal tube wall thickness. During refueling outage 11 and the subsequent operating cycles until the next scheduled inspection, this criterion does not apply to degradation identified in the portion of the tube below 17 inches from the top of the hot leg tubesheet. Degradation found in the portion of the tube below 17 inches from the top of the hot leg tube sheet does not require plugging. During refueling outage 11 and the subsequent operating cycles until the next scheduled inspection, all tubes with degradation identified in the portion of the tube within the region from the top of the hot leg tubesheet to 17 inches below the top of the tubesheet shall be removed from service;

7) Unserviceable describes the condition of a tube if it leaks or contains a defect large enough to affect its structural integrity in the event of an Operating Basis Earthquake, a loss-of-coolant accident, or a steam line or feedwater line break as specified in Specification 4.4.5.3c., above;

SURVEILLANCE REQUIRMENTS

4.4.5.4 (Continued)

8) Tube Inspection means an inspection of the steam generator tube from the point of entry (hot-leg side) completely around the U-bend to the top support of the cold leg. During refueling outage 11 and the subsequent operating cycles until the next scheduled inspection, the portion of the tube below 17 inches from the top of the hot leg tubesheet is excluded; and

9) Preservice Inspection means an inspection of the full length of each tube in each steam generator performed by eddy-current techniques prior to service to establish a baseline condition of the tubing. This inspection shall be performed prior to initial POWER OPERATION using the equipment and techniques expected to be used during subsequent inservice inspections.

SURVEILLANCE REQUIRMENTS

4.4.5.4 (Continued)

b. The steam generator shall be determined OPERABLE after completing the corresponding actions (plug all tubes exceeding the plugging limit and all tubes containing through-wall cracks) required by Table 4.4-2.

4.4.5.5 Reports

a. Within 15 days following the completion of each inservice inspection of steam generator tubes, the number of tubes plugged in each steam generator shall be reported to the Commission in a Special Report pursuant to Specification 6.8.2;

b. The complete results of the steam generator tube inservice inspection shall be submitted to the Commission in a Special Report pursuant to Specification 6.8.2 within 12 months following the completion of the inspection. This Special Report shall include:

1) Number and extent of tubes inspected,

2) Location and percent of wall-thickness penetration for each indication of an imperfection, and

3) Identification of tubes plugged.

c. Results of steam generator tube inspections which fall into Category C-3 shall be reported in a Special Report to the Commission pursuant to Specification 6.8.2 within 30 days and prior to resumption of plant operation. This report shall provide a description of investigations conducted to determine cause of the tube degradation and corrective measures taken to prevent recurrence.

TABLE 4.4-1

MINIMUM NUMBER OF STEAM GENERATORS TO BE INSPECTED DURING INSERVICE INSPECTION

No. of Steam Generators per Unit	Four
Preservice Inspection	Four
First Inservice Inspection	Two
Second & Subsequent Inservice Inspections	One [1]

TABLE NOTATION

(1) The third and fourth steam generators that were not inspected during the first inservice inspection shall be inspected during the second and third inspections, respectively. For the fourth and subsequent inspections, the inservice inspection may be limited to one steam generator on a rotating schedule encompassing 12% of the tubes if the results of the previous inspections of the four steam generators indicate that all steam generators are performing in a like manner. Note that under some circumstances, the operating conditions in one or more steam generators may be found to be more severe than those in other steam generators. Under such circumstances, the sample sequence shall be modified to inspect the most severe conditions.

TABLE 4.4-2

STEAM GENERATOR TUBE INSPECTION

1ST SAMPLE INSPECTION			2ND SAMPLE INSPECTION		3RD SAMPLE INSPECTION	
Sample Size	Result	Action Required	Result	Action Required	Result	Action Required
A minimum of S Tubes per S.G.	C-1	None	N.A.	N.A.	N.A.	N.A.
	C-2	Plug defective tubes and inspect additional 2S tubes in this S.G.	C-1	None	N.A.	N.A
			C-2	Plug defective tubes and inspect additional 4S tubes in this S.G.	C-1	None
					C-2	Plug defective tubes
					C-3	Perform action for C-3 result for first sample
			C-3	Perform Action for C-3 result of first sample	N.A	N.A.
	C-3	Inspect all tubes in this S.G., plug defective tubes and inspect 2S tubes in each other S.G. Notification to NRC pursuant to §50.72 (b)(3) of 10CFR Part 50	All other S.G.s are C-1	None	N.A	N.A.
			Some S.G.s C-2 but no additional S.G. are C-3	Perform action for C-2 result of second sample	N.A.	N.A.
			Additional S.G. in C-3	Inspect all tubes in each S.G. and plug defective tubes. Notification to NRC pursuant to §50.72 (b)(3) of 10CFR Part 50	N.A.	N.A.

$S = 3\frac{N}{n}\%$ Where N is the number of steam generators in the unit, and n is the number of steam generators inspected during an inspection.

3/4.4.6 REACTOR COOLANT SYSTEM LEAKAGE

LEAKAGE DETECTION SYSTEMS

LIMITING CONDITION FOR OPERATION

3.4.6.1 The following Reactor Coolant System Leakage Detection Systems shall be OPERABLE:

a. The Containment Atmosphere Particulate Radioactivity Monitoring System,

b. The Containment Drainage Sump Level Monitoring System, and

c. Containment Radioactive Gas Monitor

APPLICABILITY: MODES 1, 2, 3, and 4.

ACTION:

With only two of the above required Leakage Detection Systems OPERABLE, operation may continue for up to 30 days provided grab samples of the containment atmosphere are obtained and analyzed at least once per 24 hours when the required Gaseous or Particulate Radioactive Monitoring System is inoperable; otherwise, be in at least HOT STANDBY within the next 6 hours and in COLD SHUTDOWN within the following 30 hours.

SURVEILLANCE REQUIREMENTS

4.4.6.1 The Leakage Detection Systems shall be demonstrated OPERABLE by:

a. Containment Atmosphere Gaseous and Particulate Monitoring Systems - performance of CHANNEL CHECK, CHANNEL CALIBRATION, and CHANNEL OPERATIONAL TEST at the frequencies specified in Table 4.3-3, and

b. Containment Drainage Sump Level Monitoring System - performance of CHANNEL CALIBRATION at least once per 18 months.

REACTOR COOLANT SYSTEM LEAKAGE

OPERATIONAL LEAKAGE

LIMITING CONDITION FOR OPERATION

3.4.6.2 Reactor Coolant System leakage shall be limited to:

a. No PRESSURE BOUNDARY LEAKAGE,

b. 1 gpm UNIDENTIFIED LEAKAGE,

c. 1 gpm total reactor-to-secondary leakage through all steam generators and 500 gallons per day through any one steam generator,

d. 10 gpm IDENTIFIED LEAKAGE from the Reactor Coolant System,

e. 40 gpm CONTROLLED LEAKAGE at a Reactor Coolant System pressure of 2235 psig ± 20 psig, and

f. 0.5 gpm leakage per nominal inch of valve size up to a maximum of 5 gpm at a Reactor Coolant System pressure of 2235 ± 20 psig from any Reactor Coolant System Pressure Isolation Valve.*

APPLICABILITY: MODES 1, 2, 3, and 4.

ACTION:

a. With any PRESSURE BOUNDARY LEAKAGE, be in at least HOT STANDBY within 6 hours and in COLD SHUTDOWN within the following 30 hours.

b. With any Reactor Coolant System leakage greater than any one of the above limits, excluding PRESSURE BOUNDARY LEAKAGE and leakage from Reactor Coolant System Pressure Isolation Valves, reduce the leakage rate to within limits within 4 hours or be in at least HOT STANDBY within the next 6 hours and in COLD SHUTDOWN within the following 30 hours.

c. With any Reactor Coolant System Pressure Isolation Valve leakage greater than the above limit, isolate the high pressure portion of the affected system from the low pressure portion within 4 hours by use of at least two closed manual or deactivated automatic valves, or be in at least HOT STANDBY within the next 6 hours and in COLD SHUTDOWN within the following 30 hours.

*Test pressures less than 2235 psig but greater than 150 psig are allowed. Observed leakage shall be adjusted for the actual test pressure up to 2235 psig assuming the leakage to be directly proportional to pressure differential to the one-half power.

SURVEILLANCE REQUIREMENTS

4.4.6.2.1 Reactor Coolant System leakages shall be demonstrated to be within each of the above limits by:

a. Monitoring the containment atmosphere particulate radioactivity monitor at least once per 12 hours;

b. Monitoring the containment drainage sump inventory and discharge at least once per 12 hours;

c. Measurement of the CONTROLLED LEAKAGE to the reactor coolant pump seals when the Reactor Coolant System pressure is 2235 ± 20 psig at least once per 31 days with the modulating valve fully open. The provisions of Specification 4.0.4 are not applicable for entry into MODE 3 or 4;

d. Performance of a Reactor Coolant System water inventory balance within 12 hours after achieving steady-state operation* and at least once per 72 hours thereafter during steady-state operation, except that not more than 96 hours shall elapse between any two successive inventory balances; and

e. Monitoring the Reactor Head Flange Leakoff System at least once per 24 hours.

*T_{avg} being changed by less than 5°F/hour.

SURVEILLANCE REQUIREMENTS

4.4.6.2.2 Each Reactor Coolant System Pressure Isolation Valve shall be demonstrated OPERABLE by verifying leakage to be within its limit:

a. At least once per 18 months,

b. Prior to entering MODE 2 whenever the plant has been in COLD SHUTDOWN for 7 days or more and if leakage testing has not been performed in the previous 9 months,

c. Prior to returning the valve to service following maintenance, repair, or replacement work on the valve, and

d. Within 24 hours following valve actuation due to automatic or manual action or flow through the valve.*

e. Testing pursuant to Specification 4.0.5.

The provisions of Specification 4.0.4 are not applicable for entry into MODE 3 or 4.

* Not applicable to RHR Pumps 8A and 8B suction isolation valves.

PAGE INTENTIONALLY BLANK

3/4.4.7 (THIS SPECIFICATION NUMBER IS NOT USED)

TABLE 3.4-2

(THIS TABLE NUMBER IS NOT USED)

3/4.4.8 SPECIFIC ACTIVITY

LIMITING CONDITION FOR OPERATION

3.4.8 The specific activity of the reactor coolant shall be limited to:

a. Less than or equal to 1 microCurie per gram DOSE EQUIVALENT I-131, and

b. Less than or equal to 100/$\bar{E}$ microCuries per gram of gross radioactivity.

APPLICABILITY: MODES 1, 2, 3, 4, and 5.

ACTION:

MODES 1, 2, and 3*:

a. With the specific activity of the reactor coolant greater than 1 microCurie per gram DOSE EQUIVALENT I-131 for more than 48 hours during one continuous time interval or exceeding the limit line shown on Figure 3.4-1, be in at least HOT STANDBY with T_{avg} less than 500°F within 6 hours; and

b. With the specific activity of the reactor coolant greater than 100/$\bar{E}$ microCuries per gram, be in at least HOT STANDBY with T_{avg} less than 500°F within 6 hours.

MODES 1, 2, 3, 4, and 5:

With the specific activity of the reactor coolant greater than 1 microCurie per gram DOSE EQUIVALENT I-131 or greater than 100/$\bar{E}$ microCuries per gram, perform the sampling and analysis requirements of Item 4.a) of Table 4.4-3 until the specific activity of the reactor coolant is restored to within its limits.

SURVEILLANCE REQUIREMENTS

4.4.8 The specific activity of the reactor coolant shall be determined to be within the limits by performance of the sampling and analysis program of Table 4.4-3.

*With T_{avg} greater than or equal to 500°F.

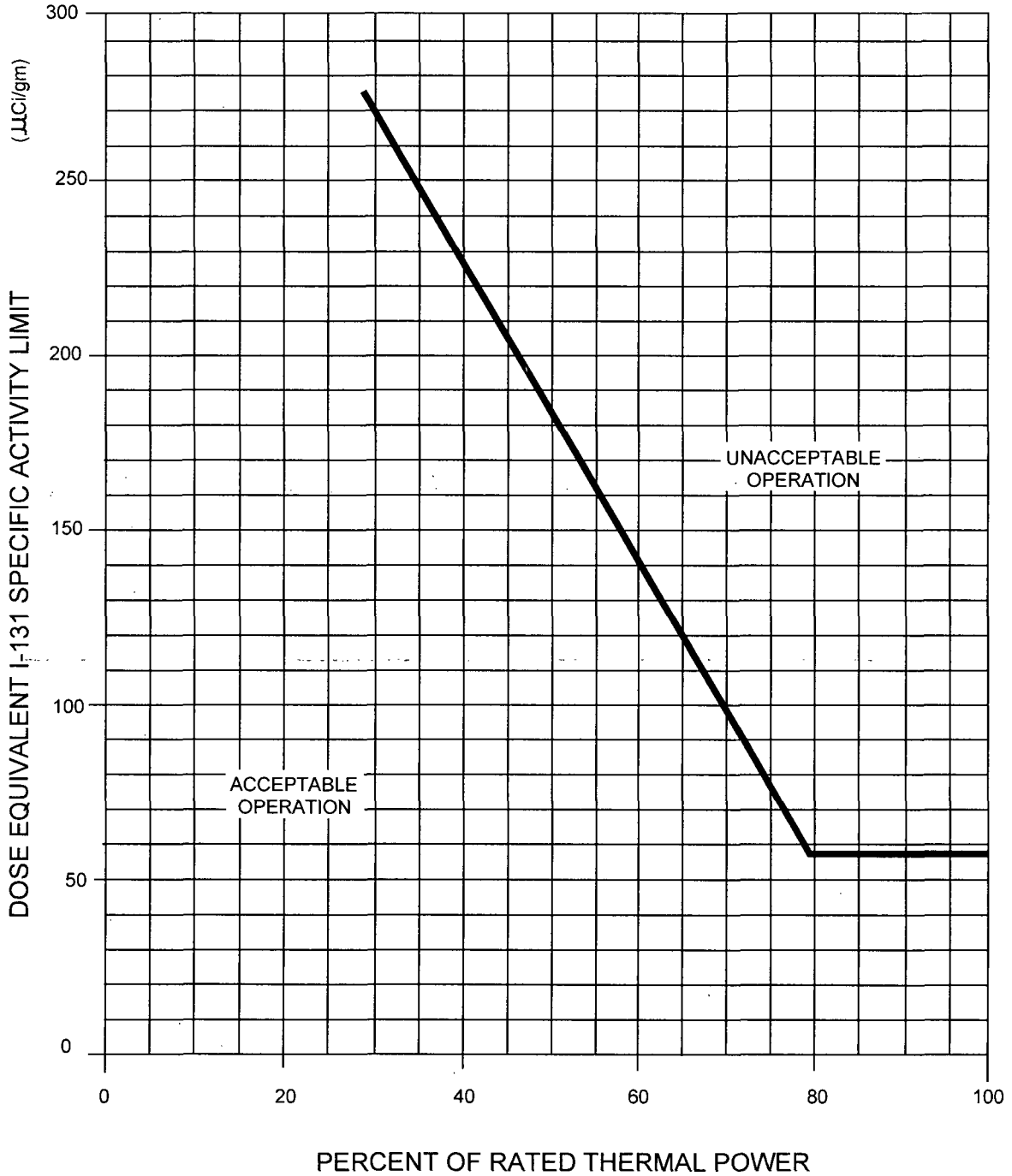

FIGURE 3.4-1

DOSE EQUIVALENT I-131 REACTOR COOLANT SPECIFIC ACTIVITY LIMIT VERSUS PERCENT OF RATED THERMAL POWER WITH THE REACTOR COOLANT SPECIFIC ACTIVITY >1 µCi/gram DOSE EQUIVALENT I-131

TABLE 4.4-3

REACTOR COOLANT SPECIFIC ACTIVITY SAMPLE AND ANALYSIS PROGRAM

TYPE OF MEASUREMENT AND ANALYSIS	SAMPLE AND ANALYSIS FREQUENCY	MODES IN WHICH SAMPLE AND ANALYSIS REQUIRED
1. Gross Radioactivity Determination	At least once per 72 hours.	1, 2, 3, 4
2. Isotopic Analysis for DOSE EQUIVALENT I-131 Concentration	1 per 14 days.	1
3. Radiochemical for $\bar{E}$ Determination*	1 per 6 months**	1
4. Isotopic Analysis for Iodine Including I-131, I-133, and I-135	a) Once per 4 hours, whenever the specific activity exceeds 1 μCi/gram DOSE EQUIVALENT 1-131 or 100/$\bar{E}$ Ci/gram of gross radioactivity, and	1#, 2#, 3#, 4#, 5#
	b) One sample between 2 and 6 hours following a THERMAL POWER change exceeding 15% of the RATED THERMAL POWER within a 1-hour period.	1, 2, 3

* A radiochemical analysis for $\bar{E}$ shall consist of the quantitative measurement of the specific activity for each radionuclide, except for radionuclides with half-lives less than 10 minutes and all radioiodines, which is identified in the reactor coolant. The specific activities for these individual radionuclides shall be used in the determination of $\bar{E}$ for the reactor coolant sample. Determination of the contributors to $\bar{E}$ shall be based upon those energy peaks identifiable with a 95% confidence level.

**Sample to be taken after a minimum of 2 EFPD and 20 days of POWER OPERATION have elapsed since reactor was last subcritical for 48 hours or longer.

#Until the specific activity of the Reactor Coolant System is restored within its limits.

3/4.4.9 PRESSURE/TEMPERATURE LIMITS

GENERAL

LIMITING CONDITION FOR OPERATION

3.4.9.1 The Reactor Coolant System (except the pressurizer) temperature and pressure shall be limited in accordance with the limit lines shown on Figures 3.4-2 and 3.4-3 during heatup, cooldown, criticality, and inservice leak and hydrostatic testing with:

a. A maximum heatup of 100°F in any 1-hour period,

b. A maximum cooldown of 100°F in any 1-hour period, and

c. A maximum temperature change of less than or equal to 10°F in any 1-hour period during inservice hydrostatic and leak testing operations above the heatup and cooldown limit curves.

APPLICABILITY: At all times.

ACTION:

With any of the above limits exceeded, restore the temperature and/or pressure to within the limit within 30 minutes; perform an engineering evaluation to determine the effects of the out-of-limit condition on the structural integrity of the Reactor Coolant System; determine that the Reactor Coolant System remains acceptable for continued operation or be in at least HOT STANDBY within the next 6 hours and reduce the RCS T_{avg} and pressure to less than 200°F and 500 psig, respectively, within the following 30 hours.

SURVEILLANCE REQUIRMENTS

4.4.9.1 The Reactor Coolant System temperature and pressure shall be determined to be within the limits at least once per 30 minutes during system heatup, cooldown, and inservice leak and hydrostatic testing operations.

MATERIAL PROPERTY BASIS

Limiting material: LOWER SHELL PLATE R-1808-1
Limiting ART values at 20 EFPY:1/4T, 109°F
3/4T, 88°F

Curves applicable for the first 20 EFPY and contain margins of 20°F and 100 psig for possible instrument errors

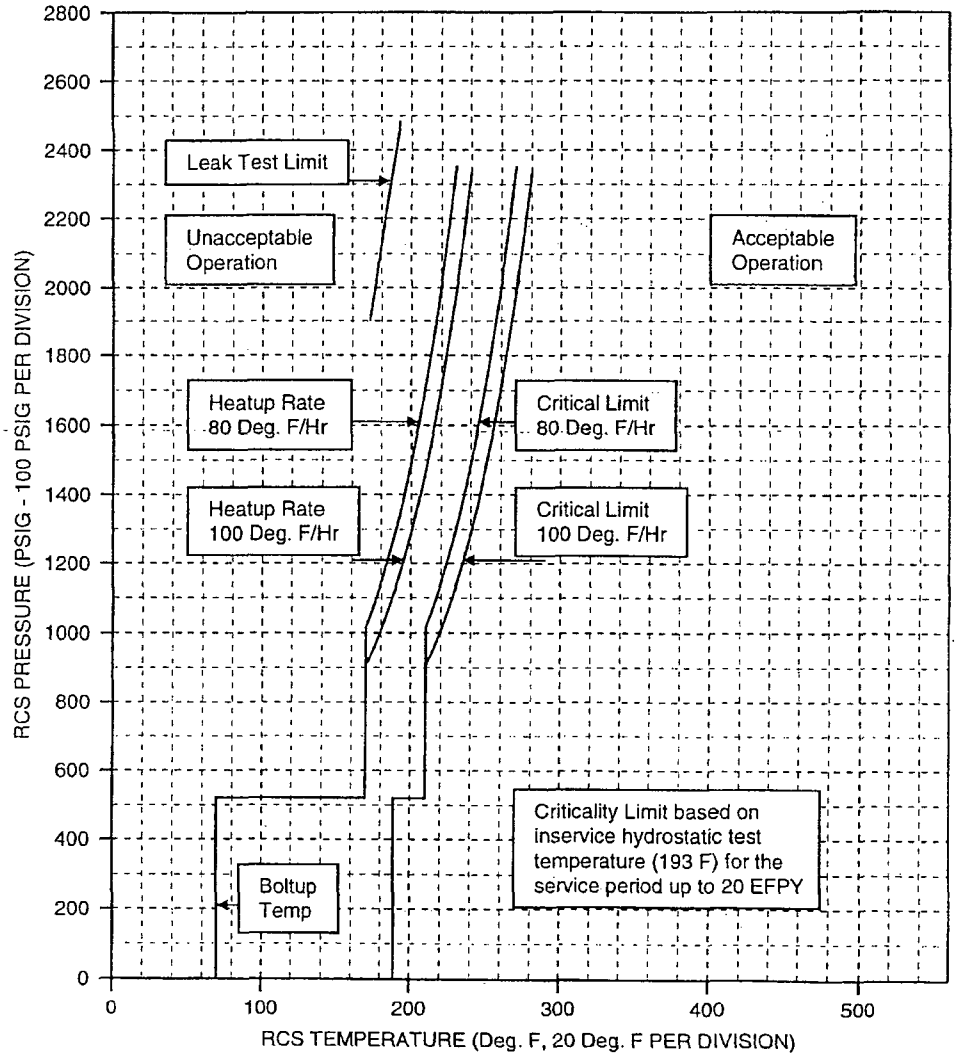

FIGURE 3.4-2
REACTOR COOLANT SYSTEM HEATUP LIMITATIONS - APPLICABLE UP TO 20 EFPY

MATERIAL PROPERTY BASIS

Limiting material: LOWER SHELL PLATE R-1808-1
Limiting ART values at 20 EFPY:1/4T, 109°F
3/4T, 88°F

Curves applicable for the first 20 EFPY and contain margins of 20°F and 100 psig for possible instrument errors

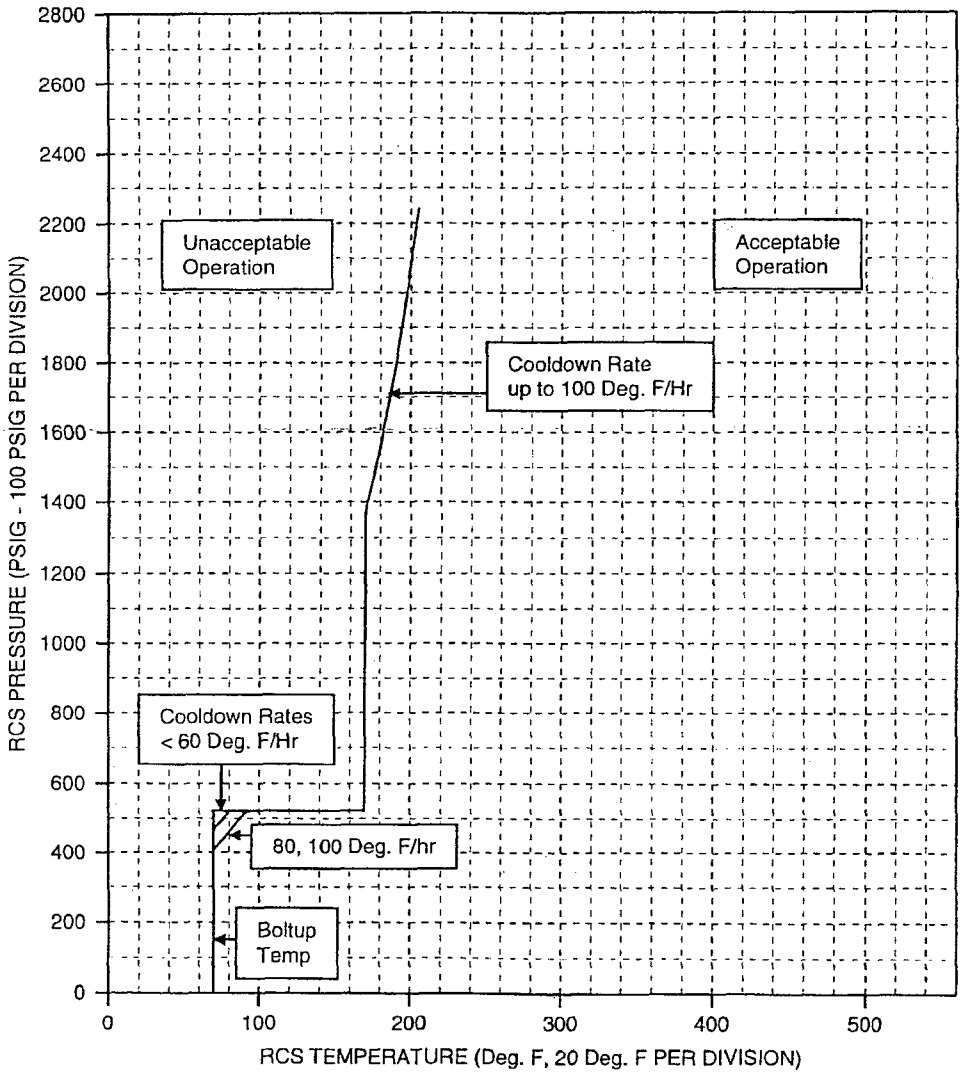

FIGURE 3.4-3
REACTOR COOLANT SYSTEM COOLDOWN LIMITATIONS - APPLICABLE UP TO 20 EFPY

PRESSURIZER

LIMITING CONDITION FOR OPERATION

3.4.9.2 The pressurizer temperature shall be limited to:

a. A maximum heatup of 100°F in any 1-hour period,

b. A maximum cooldown of 200°F in any 1-hour period, and

c. A maximum spray water temperature differential of 320°F.

APPLICABILITY: At all times.

ACTION:

With the pressurizer temperature limits in excess of any of the above limits, restore the temperature to within the limits within 30 minutes; perform an engineering evaluation to determine the effects of the out-of-limit condition on the structural integrity of the pressurizer; determine that the pressurizer remains acceptable for continued operation or be in at least HOT STANDBY within the next 6 hours and reduce the pressurizer pressure to less than 500 psig within the following 30 hours.

SURVEILLANCE REQUIREMENTS

4.4.9.2 The pressurizer temperatures shall be determined to be within the limits at least once per 30 minutes during system heatup or cooldown. The spray water temperature differential shall be determined to be within the limit at least once per 12 hours during auxiliary spray operation.

LIMITING CONDITION FOR OPERATION

3.4.9.3 The following Overpressure Protection Systems shall be OPERABLE:

a. In MODE 4 when the temperature of any RCS cold leg is less than or equal to 290°F; and in MODE 5 and MODE 6 with all Safety Injection pumps inoperable at least one of the following groups of two overpressure protection devices shall be OPERABLE when the RCS is not depressurized with an RCS vent area of greater than or equal to 1.58 square inches:

1) Two residual heat removal (RHR) suction relief valves each with a setpoint of 450 psig +0, -3 %; or

2) Two power-operated relief valves (PORVs) with lift setpoints that vary with RCS temperature which do not exceed the limit established in Figure 3.4-4, or

3) One RHR suction relief valve and one PORV with setpoints as required above.

b. In MODE 5 and MODE 6 with all Safety Injection pumps except one inoperable:

1) The Reactor Coolant System (RCS) depressurized with an RCS vent area equal to or greater than 18 square inches, or

2) The RCS in a reduced inventory condition*.

APPLICABILITY: MODE 4 when the temperature of any RCS cold leg is less than or equal to 290°F; MODE 5 and MODE 6 with the reactor vessel head on and the vessel head closure bolts not fully detensioned.

ACTION:

a) In MODE 4 with all Safety Injection pumps inoperable and with one of the two required overpressure protection devices inoperable, either restore two overpressure protection devices to OPERABLE status within 7 days or within the next 8 hours

(a) depressurize the RCS and

(b) vent the RCS through at least a 1.58-square-inch vent.

*A reduced inventory condition exists whenever reactor vessel (RV) water level is lower than 36 inches below the RV flange.

3.4.9.3

ACTION: (Continued)

b) In MODE 5 and MODE 6 with all Safety Injection pumps inoperable and with one of the two required overpressure protection devices inoperable, restore two overpressure protection devices to OPERABLE status within 24 hours or within the next 8 hours

   (a) depressurize the RCS and

   (b) vent the RCS through at least a 1.58-square-inch vent.

c) In MODE 4, MODE 5 and MODE 6 with all Safety Injection pumps inoperable and with both of the two required overpressure protection devices inoperable, within the next 8 hours

   (a) depressurize the RCS and

   (b) vent the RCS through at least a 1.58-square-inch vent.

d) In the event the PORVs, or the RHR suction relief valves, or the RCS vent(s) are used to mitigate an RCS pressure transient, a Special Report shall be prepared and submitted to the Commission pursuant to Specification 6.8.2 within 30 days. The report shall describe the circumstances initiating the transient, the effect of the PORVs, or the RHR suction relief valves, or RCS vent(s) on the transient, and any corrective action necessary to prevent recurrence.

e) In MODE 5 and MODE 6 with all Safety Injection pumps except one inoperable and with the RCS vent area less than 18 square inches or RCS water level not in a reduced inventory condition, immediately restore all Safety Injection pumps to inoperable status.

SURVEILLANCE REQUIREMENTS

4.4.9.3.1 Each PORV shall be demonstrated OPERABLE when the PORV(s) are being used for overpressure protection by:

a. Performance of an ANALOG CHANNEL OPERATIONAL TEST on the PORV actuation channel, but excluding valve operation, at least once per 31 days thereafter when the PORV is required OPERABLE; and

b. Performance of a CHANNEL CALIBRATION on the PORV actuation channel at least once per 18 months; and

c. Verifying the PORV isolation valve is open at least once per 72 hours.

4.4.9.3.2 Each RHR suction relief valve shall be demonstrated OPERABLE when the RHR suction relief valve(s) are being used for overpressure protection as follows:

a. For RHR suction relief valve RC-V89 by verifying at least once per 72 hours that RHR suction isolation valves RC-V87 and RC-V88 are open.

b. For RHR suction relief valve RC-V24 by verifying at least once per 72 hours that RHR suction isolation valves RC-V22 and RC-V23 are open.

c. Testing pursuant to Specification 4.0.5.

4.4.9.3.3 The RCS vent(s) shall be verified to be open at least once per 12 hours** when the vent(s) is being used for overpressure protection.

4.4.9.3.4 The reactor vessel water level shall be verified to be lower than 36 inches below the reactor vessel flange at least once per 12 hours when the reduced inventory condition is being used for overpressure protection.

**Except when the vent pathway is provided with a valve(s) or device(s) that is locked, sealed, or otherwise secured in the open position, then verify this valve(s) or device(s) open at least once per 31 days.

VALID FOR THE FIRST 20 EFPY, SETPOINT CONTAINS MARGIN OF 50°F FOR TRANSIENT EFFECTS

T ≤ 200.0°F , P = 561.0 PSIG;
200.0°F < T ≤ 230.5°F , P = 12.1*(T-200.0) + 926.0 PSIG;
230.5°F < T ≤ 255.0°F , P = 23.15*(T-230.5) + 1295.05 PSIG;
T > 255.0°F , P = 34.5*(T-255.0) + 1862.225 PSIG

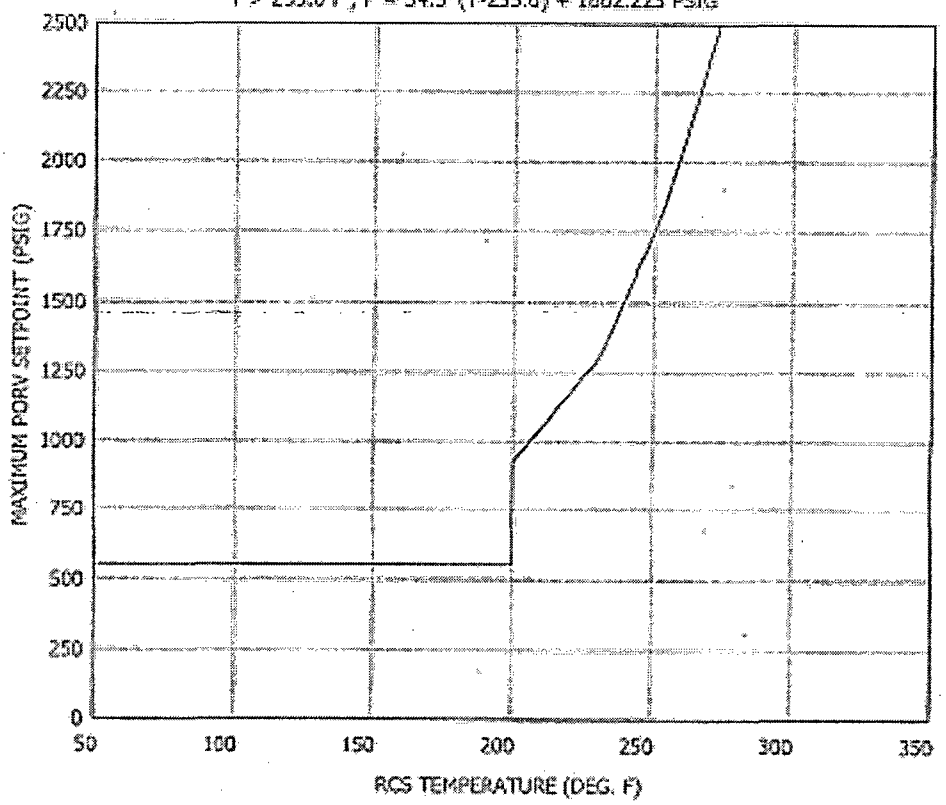

FIGURE 3.4-4 RCS COLD OVERPRESSURE PROTECTION SETPOINTS

STRUCTURAL INTEGRITY

LIMITING CONDITION FOR OPERATION

3.4.10 The structural integrity of ASME Code Class 1, 2, and 3 components shall be maintained in accordance with Specification 4.4.10.

APPLICABILITY: All MODES.

ACTION:

a. With the structural integrity of any ASME Code Class 1 component(s) not conforming to the above requirements, restore the structural integrity of the affected component(s) to within its limit or isolate the affected component(s) prior to increasing the Reactor Coolant System temperature more than 50°F above the minimum temperature required by NDT considerations.

b. With the structural integrity of any ASME Code Class 2 component(s) not conforming to the above requirements, restore the structural integrity of the affected component(s) to within its limit or isolate the affected component(s) prior to increasing the Reactor Coolant System temperature above 200°F.

c. With the structural integrity of any ASME Code Class 3 component(s) not conforming to the above requirements, restore the structural integrity of the affected component(s) to within its limit or isolate the affected component(s) from service.

SURVEILLANCE REQUIREMENTS

4.4.10 In addition to the requirements of Specification 4.0.5, each reactor coolant pump flywheel shall be inspected at least once every 10 years. This inspection shall be by either of the following examinations:

a. An in-place examination, utilizing ultrasonic testing, over the volume from the inner bore of the flywheel to the circle of one-half the outer radius; or

b. A surface examination, utilizing magnetic particle testing and/or penetrant testing, of the exposed surfaces of the disassembled flywheel.

3/4.4.11 REACTOR COOLANT SYSTEM VENTS

LIMITING CONDITION FOR OPERATION

3.4.11 At least one Reactor Coolant System vent path consisting of one vent valve and one block valve powered from emergency busses shall be OPERABLE and closed*at each of the following locations:

a. Reactor vessel head, and

b. Pressurizer steam space.

APPLICABILITY: MODES 1, 2, 3, and 4.

ACTION:

a. With one of the above Reactor Coolant System vent paths inoperable, STARTUP and/or POWER OPERATION may continue provided the inoperable vent path is maintained closed with power removed from the valve actuator of all the vent valves and block valves in the inoperable vent path; restore the inoperable vent path to OPERABLE status within 30 days, or, be in HOT STANDBY within 6 hours and in COLD SHUTDOWN within the following 30 hours.

b. With both Reactor Coolant System vent paths inoperable; maintain the inoperable vent path closed with power removed from the valve actuators of all the vent valves and block valves in the inoperable vent paths, and restore at least one of the vent paths to OPERABLE status within 72 hours or be in HOT STANDBY within 6 hours and in COLD SHUTDOWN within the following 30 hours.

SURVEILLANCE REQUIREMENTS

4.4.11.1 Each Reactor Coolant System vent path block valve not required to be closed by ACTION a. or b., above, shall be demonstrated OPERABLE at least once per COLD SHUTDOWN, if not performed within the previous 92 days, by operating the valve through one complete cycle of full travel from the control room.

4.4.11.2 Each Reactor Coolant System vent path shall be demonstrated OPERABLE at least once per 18 months by:

a. Verifying all manual isolation valves in each vent path are locked in the open position,

*For an OPERABLE vent path using a power-operated relief valve (PORV) as the vent path, the PORV block valve is not required to be closed.

SURVEILLANCE REQUIREMENTS

4.4.11.2 (Continued)

b. Cycling each vent valve through at least one complete cycle of full travel from the control room, and

c. Verifying flow through the Reactor Coolant System vent paths during venting.

3/4.5 EMERGENCY CORE COOLING SYSTEMS

3/4.5.1 ACCUMULATORS

HOT STANDBY, STARTUP, AND POWER OPERATION

LIMITING CONDITION FOR OPERATION

3.5.1.1 Each Reactor Coolant System (RCS) accumulator shall be OPERABLE with:

a. The isolation valve open and power removed,

b. A contained borated water volume of between 6121 and 6596 gallons,

c. A boron concentration of between the limits specified in the COLR, and

d. A nitrogen cover-pressure of between 585 and 664 psig.

APPLICABILITY: MODES 1, 2, and 3*

ACTION:

a. With one accumulator inoperable, except as a result of a closed isolation valve, restore the inoperable accumulator to OPERABLE status within 8 hours or be in at least HOT STANDBY within the next 6 hours and reduce pressurizer pressure to less than 1000 psig within the following 6 hours.

b. With one accumulator inoperable due to the isolation valve being closed, either immediately open the isolation valve or be in at least HOT STANDBY within 6 hours and reduce pressurizer pressure to less than 1000 psig within the following 6 hours.

c. With one pressure or water level channel inoperable per accumulator, return the inoperable channel to OPERABLE status within 30 days or be in at least HOT STANDBY within the next 6 hours and in HOT SHUTDOWN within the following 6 hours.

d. With two pressure channels or two water level channels inoperable per accumulator, immediately declare the affected accumulator(s) inoperable.

SURVEILLANCE REQUIREMENTS

4.5.1.1 Each accumulator shall be demonstrated OPERABLE:

a. At least once per 24 hours by:

1) Verifying the contained borated water volume and nitrogen cover-pressure in the tanks, and

*Pressurizer pressure above 1000 psig.

SURVEILLANCE REQUIREMENTS

4.5.1.1 (Continued)

2) Verifying that each accumulator isolation valve is open.

b. By verifying the boron concentration of the accumulator solution under the following conditions:

1) At least once per 31 days,

2) Within 6 hours after each solution volume increase of greater than or equal to 1% of tank volume. This surveillance is not required when the volume increase makeup source is the RWST and the RWST has not been diluted since verifying that the RWST boron concentration is equal to or greater than the accumulator boron concentration limit.

c. At least once per 31 days when the RCS pressure is above 1000 psig by verifying that power to the isolation valve operator is disconnected.

d. At least once per 18 months by verifying that each accumulator isolation valve opens automatically under each of the following conditions:

1) When an actual or a simulated RCS pressure signal exceeds the P-11 (Pressurizer Pressure Block of Safety Injection) Setpoint, and

2) Upon receipt of a Safety Injection test signal.

ACCUMULATORS

SHUTDOWN

LIMITING CONDITION FOR OPERATION

3.5.1.2 Each reactor coolant system accumulator isolation valve shall be shut with power removed from the valve operator.

APPLICABILITY: MODES 4* and 5**.

ACTION:

With one or more accumulator isolation valve(s) open and/or power available to the valve operator(s), immediately close the accumulator isolation valves and/or remove power from the valve operator(s).

SURVEILLANCE REQUIREMENTS

4.5.1.2 Each accumulator isolation valve will be verified shut with power removed from the valve operator at least once per 31 days.

*Within 12 hours prior to entry into MODE 3 from MODE 4 and if pressurizer pressure is greater than 1000 psig, each accumulator isolation valve shall be open as required by Specification 3.5.1.1.a.

**With accumulator pressure greater than 100 psig.

3/4.5.2 ECCS SUBSYSTEMS - T_{avg} GREATER THAN OR EQUAL TO 350°F

LIMITING CONDITION FOR OPERATION

3.5.2 Two independent Emergency Core Cooling System (ECCS) subsystems shall be OPERABLE with each subsystem comprised of:

a. One OPERABLE centrifugal charging pump,

b. One OPERABLE Safety Injection pump,

c. One OPERABLE RHR heat exchanger,

d. One OPERABLE RHR pump, and

e. An OPERABLE flow path* capable of taking suction from the refueling water storage tank on a Safety Injection signal and automatically transferring suction to the containment sump during the recirculation phase of operation.

APPLICABILITY: MODES 1, 2, and 3**.

ACTION:

a. With one ECCS subsystem inoperable, restore the inoperable subsystem to OPERABLE status within 7 days or be in at least HOT STANDBY within the next 6 hours and in HOT SHUTDOWN within the following 6 hours.

b. In the event the ECCS is actuated and injects water into the Reactor Coolant System, a Special Report shall be prepared and submitted to the Commission pursuant to Specification 6.8.2 within 90 days describing the circumstances of the actuation and the total accumulated actuation cycles to date. The current value of the usage factor for each affected Safety Injection nozzle shall be provided in this Special Report whenever its value exceeds 0.70.

---

*During MODE 3, the discharge paths of both Safety Injection pumps may be isolated by closing for a period of up to 2 hours to perform surveillance testing as required by Specification 4.4.6.2.2.

**The provisions of Specifications 3.0.4 and 4.0.4 are not applicable for entry into MODE 3 for the centrifugal charging pump and the Safety Injection pumps declared inoperable pursuant to Specification 4.5.3.1.2 provided the centrifugal charging pump and the Safety Injection pumps are restored to OPERABLE status within at least 4 hours or prior to the temperature of one or more of the RCS cold legs exceeding 375°F, whichever comes first.

SURVEILLANCE REQUIREMENTS

4.5.2 Each ECCS subsystem shall be demonstrated OPERABLE:

a. At least once per 24 hours by verifying that the following valves are in the indicated positions with power to the valve operators removed:

Valve Number	Valve Function	Valve Position
SI-V-3	Accumulator Isolation	Open*
SI-V-17	Accumulator Isolation	Open*
SI-V-32	Accumulator Isolation	Open*
SI-V-47	Accumulator Isolation	Open*
SI-V-114	SI Pump to Cold-Leg Isolation	Open
RH-V-14	RHR Pump to Cold-Leg Isolation	Open
RH-V-26	RHR Pump to Cold-Leg Isolation	Open
RH-V-32	RHR to Hot-Leg Isolation	Closed
RH-V-70	RHR to Hot-Leg Isolation	Closed
SI-V-77	SI to Hot-Leg Isolation	Closed
SI-V-102	SI to Hot-Leg Isolation	Closed

b. At least once per 31 days by:

1) Verifying that the ECCS piping is full of water, and

2) Verifying that each valve (manual, power-operated, or automatic) in the flow path that is not locked, sealed, or otherwise secured in position, is in its correct position.

c. By a visual inspection which verifies that no loose debris (rags, trash, clothing, etc.) is present in the containment which could be transported to the containment sump and cause restriction of the pump suctions during LOCA conditions. This visual inspection shall be performed:

1) For all accessible areas of the containment prior to establishing primary CONTAINMENT INTEGRITY, and

2) At least once daily of the areas affected within containment by containment entry and during the final entry when primary CONTAINMENT INTEGRITY is established.

*Pressurizer pressure above 1000 psig.

SURVEILLANCE REQUIREMENTS

4.5.2 (Continued)

d. At least once per 18 months by:

1) Verifying automatic interlock action of the RHR system from the Reactor Coolant System to ensure that with a simulated or actual Reactor Coolant System pressure signal greater than or equal to 440 psig, the interlocks prevent the valves from being opened.

2) A visual inspection of the containment sump and verifying that the subsystem suction inlets are not restricted by debris and that the sump components (trash racks, screens, etc.) show no evidence of structural distress or abnormal corrosion.

e. At least once per 18 months, during shutdown, by:

1) Verifying that each automatic valve in the flow path actuates to its correct position on (Safety Injection actuation and Automatic Switchover to Containment Sump) test signals, and

2) Verifying that each of the following pumps start automatically upon receipt of a Safety Injection actuation test signal:

a) Centrifugal charging pump,

b) Safety Injection pump, and

c) RHR pump.

f. By verifying OPERABILITY of each pump when tested pursuant to Specification 4.0.5:

1) Centrifugal charging pump;

2) Safety Injection pump; and

3) RHR pump.

4.5.2 (Continued)

g. By verifying the correct position of each electrical and/or mechanical position stop for the following ECCS throttle valves:

1) Within 4 hours following completion of each valve stroking operation or maintenance on the valve when the ECCS subsystems are required to be OPERABLE, and

2) At least once per 18 months.

High Head SI System Valve Number	Intermediate Head SI System Valve Number
SI-V-143	SI-V-80
SI-V-147	SI-V-85
SI-V-151	SI-V-104
SI-V-155	SI-V-109
	SI-V-117
	SI-V-121
	SI-V-125
	SI-V-129

h. NOT USED

3/4.5.3 ECCS SUBSYSTEMS - T_{avg} LESS THAN 350°F

LIMITING CONDITION FOR OPERATION

3.5.3.1 As a minimum, one ECCS subsystem comprised of the following shall be OPERABLE:

a. One OPERABLE centrifugal charging pump,

b. One OPERABLE RHR heat exchanger,

c. One OPERABLE RHR pump, and

d. An OPERABLE flow path capable of taking suction from the refueling water storage tank upon being manually realigned and transferring suction to the containment sump during the recirculation phase of operation.

APPLICABILITY: MODE 4.

ACTION:

a. With no ECCS subsystem OPERABLE because of the inoperability of either the centrifugal charging pump or the flow path from the refueling water storage tank, restore at least one ECCS subsystem to OPERABLE status within 1 hour or be in COLD SHUTDOWN within the next 20 hours.

b. With no ECCS subsystem OPERABLE because of the inoperability of either the residual heat removal heat exchanger or RHR pump, restore at least one ECCS subsystem to OPERABLE status or maintain the Reactor Coolant System T_{avg} less than 350°F by use of alternate heat removal methods.

c. In the event the ECCS is actuated and injects water into the Reactor Coolant System, a Special Report shall be prepared and submitted to the Commission pursuant to Specification 6.8.2 within 90 days describing the circumstances of the actuation and the total accumulated actuation cycles to date. The current value of the usage factor for each affected Safety Injection nozzle shall be provided in this Special Report whenever its value exceeds 0.70.

SURVEILLANCE REQUIREMENTS

4.5.3.1.1 The ECCS subsystem shall be demonstrated OPERABLE per the applicable requirements of Specification 4.5.2.

4.5.3.1.2 All centrifugal charging pumps and Safety Injection pumps, except the above allowed OPERABLE pumps, shall be demonstrated inoperable* by verifying that the motor circuit breakers are secured in the open position** within 4 hours after entering MODE 4 from MODE 3 or prior to the temperature of one or more of the RCS cold legs decreasing below 325°F, whichever comes first, and at least once per 31 days thereafter.

*An additional charging pump may be made capable of injecting under administrative control for up to 1 hour during pump-swap operation, except during RCS water-solid conditions. Additionally, an inoperable pump may be energized for testing or for filling accumulators provided the discharge at the pump has been isolated from the RCS by a closed isolation valve with power removed from the valve operator, or by a manual isolation valve secured in the closed position.

**An alternate method to assure pump inoperability may be used by placing the control room pump-control switch(s) in the Pull-to-Lock position and isolating the discharge flow path of the pump(s) from the RCS by at least one closed isolation valve. Use of the alternate method requires inoperability verification at least once every 12 hours.

ECCS SUBSYSTEMS - T_{avg} EQUAL TO OR LESS THAN 200°F

LIMITING CONDITION FOR OPERATION

3.5.3.2 As a minimum, the following number of Safety Injection pumps shall be inoperable*:

a. Two when the RCS vent area is less than 18 square inches.

b. One when the RCS vent area is equal to or greater than 18 square inches, or

c. One when the RCS is in a reduced inventory condition**.

APPLICABILITY: MODE 5 and MODE 6 with the reactor vessel head on and the vessel head closure bolts not fully detensioned.

ACTION:

With fewer than the required number of Safety Injection pumps inoperable, immediately restore all pumps required to inoperable status.

SURVEILLANCE REQUIREMENTS

4.5.3.2 All Safety Injection pumps required to be inoperable shall be demonstrated inoperable by verifying that the motor circuit breakers are secured in the open position at least once per 31 days***.

*An inoperable pump may be energized for testing or for filling accumulators provided the discharge at the pump has been isolated from the RCS by a closed isolation valve with power removed from the valve operator, or by a manual isolation valve secured in the closed position.

** A reduced inventory condition exists whenever reactor vessel (RV) water level is lower than 36 inches below the RV flange.

*** An alternate method to assure pump inoperability may be used by placing the control room pump-control switch(s) in the Pull-to-Lock position and isolating the discharge flow path of the pump(s) from the RCS by at least one closed isolation valve. Use of the alternate method requires inoperability verification at least once every 12 hours.

3/4.5.4 REFUELING WATER STORAGE TANK

LIMITING CONDITION FOR OPERATION

3.5.4 The refueling water storage tank (RWST) shall be OPERABLE with:

a. A minimum contained borated water volume of 477,000 gallons,

b. A boron concentration between the limits specified in the COLR,

c. A minimum solution temperature of 50°F, and

d. A maximum solution temperature of 98°F.

APPLICABILITY: MODES 1, 2, 3, and 4.

ACTION:

With the RWST inoperable, restore the tank to OPERABLE status within 1 hour or be in at least HOT STANDBY within 6 hours and in COLD SHUTDOWN within the following 30 hours.

SURVEILLANCE REQUIREMENTS

4.5.4 The RWST shall be demonstrated OPERABLE:

a. At least once per 7 days by:

1) Verifying the contained borated water volume in the tank, and

2) Verifying the boron concentration of the water.

b. At least once per 24 hours by verifying the RWST temperature.

3/4.6 CONTAINMENT SYSTEMS

3/4.6.1 PRIMARY CONTAINMENT

CONTAINMENT INTEGRITY

LIMITING CONDITION FOR OPERATION

3.6.1.1 Primary CONTAINMENT INTEGRITY shall be maintained.

APPLICABILITY: MODES 1, 2, 3, and 4.

ACTION:

Without primary CONTAINMENT INTEGRITY, restore CONTAINMENT INTEGRITY within 1 hour or be in at least HOT STANDBY within the next 6 hours and in COLD SHUTDOWN within the following 30 hours.

SURVEILLANCE REQUIREMENTS

4.6.1.1 Primary CONTAINMENT INTEGRITY shall be demonstrated:

a. At least once per 31 days by verifying that all penetrations* not capable of being closed by OPERABLE containment automatic isolation valves and required to be closed during accident conditions are closed by valves, blind flanges, or deactivated automatic valves secured in their positions except for valves that are open under administrative control as permitted by Specification 3.6.3; and

b. By verifying that each containment air lock is in compliance with the requirements of Specification 3.6.1.3.

*Except valves, blind flanges, and deactivated automatic valves which are located inside the containment and are locked, sealed, or otherwise secured in the closed position. These penetrations shall be verified closed during each COLD SHUTDOWN except that such verification need not be performed more often than once per 92 days.

CONTAINMENT LEAKAGE

LIMITING CONDITION FOR OPERATION

3.6.1.2 Containment leakage rates shall be limited in accordance with the Containment Leakage Rate Testing Program.

APPLICABILITY: MODES 1, 2, 3, and 4.

ACTION:

With the overall integrated leakage rate exceeding 1.0 La, restore CONTAINMENT INTEGRITY within 1 hour or be in at least HOT STANDBY within the next 6 hours and in COLD SHUTDOWN within the following 30 hours.

SURVEILLANCE REQUIREMENTS

4.6.1.2 The containment leakage rates shall be demonstrated in accordance with the Containment Leakage Rate Testing Program.

PAGE INTENTIONALLY BLANK

PAGE INTENTIONALLY BLANK

PAGE INTENTIONALLY BLANK

PAGE INTENTIONALLY BLANK

LIMITING CONDITION FOR OPERATION

3.6.1.3 Each containment air lock shall be OPERABLE in accordance with the Containment Leakage Rate Testing Program.

APPLICABILITY: MODES 1, 2, 3, and 4.

ACTION:

a. With one containment air lock door inoperable:

   1. Maintain at least the OPERABLE air lock door closed* and either restore the inoperable air lock door to OPERABLE status within 24 hours or lock the OPERABLE air lock door closed,

   2. Operation may then continue until performance of the next required overall air lock leakage test provided that the OPERABLE air lock door is verified to be locked closed at least once per 31 days,

   3. Otherwise, be in at least HOT STANDBY within the next 6 hours and in COLD SHUTDOWN within the following 30 hours, and

   4. The provisions of Specification 3.0.4 are not applicable.

b. With the containment air lock inoperable, except as the result of an inoperable air lock door, maintain at least one air lock door closed; restore the inoperable air lock to OPERABLE status within 24 hours or be in at least HOT STANDBY within the next 6 hours and in COLD SHUTDOWN within the following 30 hours.

*Except during entry to repair an inoperable inner door, for a cumulative time not to exceed 1 hour per year.

SURVEILLANCE REQUIREMENTS

4.6.1.3 Each containment air lock shall be demonstrated OPERABLE:

a. With the leakage rate in accordance with the Containment Leakage Rate Testing Program.

b. At least once per 24 months by verifying that only one door in each air lock can be opened at a time.

PRIMARY CONTAINMENT

INTERNAL PRESSURE

LIMITING CONDITION FOR OPERATION

3.6.1.4 Primary containment internal pressure shall be maintained between 14.6 and 16.2 psia.

APPLICABILITY: MODES 1, 2, 3, and 4.

ACTION:

With the containment internal pressure outside of the limits above, restore the internal pressure to within the limits within 1 hour or be in at least HOT STANDBY within the next 6 hours and in COLD SHUTDOWN within the following 30 hours.

SURVEILLANCE REQUIREMENTS

4.6.1.4 The primary containment internal pressure shall be determined to be within the limits at least once per 12 hours.

PRIMARY CONTAINMENT

AIR TEMPERATURE

LIMITING CONDITION FOR OPERATION

3.6.1.5 Primary containment average air temperature shall not exceed 120°F.

APPLICABILITY: MODES 1, 2, 3, and 4.

ACTION:

With the containment average air temperature greater than 120°F, reduce the average air temperature to within the limit within 8 hours, or be in at least HOT STANDBY within the next 6 hours and in COLD SHUTDOWN within the following 30 hours.

SURVEILLANCE REQUIREMENTS

4.6.1.5 The primary containment average air temperature shall be the arithmetical average of the temperatures at the following locations and shall be determined at least once per 24 hours:

Location

a. Elevation 45 feet

b. Elevation 71 feet

c. Elevation 110 feet

d. Elevation 130 feet

CONTAINMENT VESSEL STRUCTURAL INTEGRITY

LIMITING CONDITION FOR OPERATION

3.6.1.6 The structural integrity of the containment vessel shall be maintained at a level consistent with the acceptance criteria in Specification 4.6.1.6.

APPLICABILITY: MODES 1, 2, 3, and 4.

ACTION:

With the structural integrity of the containment vessel not conforming to the above requirements, restore the structural integrity to within the limits prior to increasing the Reactor Coolant System temperature above 200°F.

SURVEILLANCE REQUIREMENTS

4.6.1.6 The structural integrity of the containment vessel shall be determined by a visual inspection of the exposed accessible interior and exterior surfaces of the vessel in accordance with the Containment Leakage Rate Testing Program. Any abnormal degradation of the containment vessel detected during the above required inspections shall be reported to the Commission in a Special Report pursuant to Specification 6.8.2 within 15 days.

LIMITING CONDITION FOR OPERATION

3.6.1.7 Each 8-inch containment purge supply and exhaust isolation valve shall be OPERABLE and sealed closed except when open for purge system operation for pressure control; for ALARA, respirable, and air quality considerations to facilitate personnel entry; and for surveillance tests that require the valve(s) to be open.

APPLICABILITY: MODES 1, 2, 3, and 4.

ACTION:

a. With one or more of the 8-inch containment purge supply or exhaust isolation valves open for reasons other than given in Specification 3.6.1.7 above, close the open 8-inch valve(s) or isolate the penetration(s) within 4 hours, otherwise be in at least HOT STANDBY within the next 6 hours, and in COLD SHUTDOWN within the following 30 hours.

b. With one or more containment purge supply or exhaust isolation valves having a measured leakage rate in excess of the limits of the Containment Leakage Rate Testing Program, restore the inoperable valve(s) to OPERABLE status or isolate the affected penetration(s) so that the measured leakage rate does not exceed the limits of the Containment Leakage Rate Testing Program, within 24 hours and close the purge supply if the affected penetration is the exhaust penetration, otherwise be in at least HOT STANDBY within the next 6 hours, and in COLD SHUTDOWN within the following 30 hours.

SURVEILLANCE REQUIREMENTS

4.6.1.7.1 Each 8-inch containment purge supply and exhaust isolation valve with resilient material seals shall be demonstrated OPERABLE by verifying that the measured leakage rate is in accordance with the Containment Leakage Rate Testing Program.

4.6.1.7.2 Each 8-inch containment purge supply and exhaust isolation valve shall be verified to be sealed closed or open in accordance with Specification 3.6.1.7 at least once per 31 days.

3/4.6.2 DEPRESSURIZATION AND COOLING SYSTEMS

CONTAINMENT SPRAY SYSTEM

LIMITING CONDITION FOR OPERATION

3.6.2.1 Two independent Containment Spray Systems shall be OPERABLE with each Spray System capable of taking suction from the RWST* and automatically transferring suction to the containment sump.

APPLICABILITY: MODES 1, 2, 3, and 4.

ACTION:

With one Containment Spray System inoperable, restore the inoperable Spray System to OPERABLE status within 72 hours or be in at least HOT STANDBY within the next 6 hours; restore the inoperable Spray System to OPERABLE status within the next 48 hours or be in COLD SHUTDOWN within the following 30 hours.

SURVEILLANCE REQUIREMENTS

4.6.2.1 Each Containment Spray System shall be demonstrated OPERABLE:

a. At least once per 31 days by verifying that each valve (manual, power-operated, or automatic) in the flow path that is not locked, sealed, or otherwise secured in position is in its correct position;

b. By verifying OPERABILITY of each pump when tested pursuant to Specification 4.0.5;

c. At least once per 18 months during shutdown, by:

   1) Verifying that each automatic valve in the flow path actuates to its correct position on a Containment Pressure-Hi-3 test signal, and

   2) Verifying that each spray pump starts automatically on a Containment Pressure-Hi-3 test signal.

d. At least once per 10 years by performing an air or smoke flow test through each spray header and verifying each spray nozzle is unobstructed.

*In MODE 4, when the Residual Heat Removal System is in operation, an OPERABLE flow path is one that is capable of taking suction from the refueling water storage tank upon being manually realigned.

LIMITING CONDITION FOR OPERATION

3.6.2.2 The Spray Additive System shall be OPERABLE with:

a. A spray additive tank containing a volume of between 9420 and 9650 gallons of between 19 and 21% by weight NaOH solution, and

b. Two gravity feed paths each capable of adding NaOH solution from the chemical additive tank to the Refueling Water Storage Tank.

APPLICABILITY: MODES 1, 2, 3, and 4.

ACTION:

With the Spray Additive System inoperable, restore the system to OPERABLE status within 72 hours or be in at least HOT STANDBY within the next 6 hours; restore the Spray Additive System to OPERABLE status within the next 48 hours or be in COLD SHUTDOWN within the following 30 hours.

SURVEILLANCE REQUIREMENTS

4.6.2.2 The Spray Additive System shall be demonstrated OPERABLE:

a. At least once per 31 days by verifying that each valve (manual, power-operated, or automatic) in the flow path that is not locked, sealed, or otherwise secured in position is in its correct position;

b. At least once per 6 months by:

   1) Verifying the contained solution volume in the tank, and

   2) Verifying the concentration of the NaOH solution by chemical analysis.

c. At least once per 18 months, during shutdown, by verifying that each automatic valve in the flow path actuates to its correct position on a Containment Pressure-Hi-3 test signal.

3/4.6.3 CONTAINMENT ISOLATION VALVES

LIMITING CONDITION FOR OPERATION

3.6.3 Each containment isolation valve shall be OPERABLE*.

APPLICABILITY: MODES 1, 2, 3, and 4.

ACTION:

With one or more of the isolation valve(s) inoperable, maintain at least one isolation valve OPERABLE in each affected penetration that is open and:

a. Restore the inoperable valve(s) to OPERABLE status within 4 hours, or

b. Isolate each affected penetration within 4 hours by use of at least one deactivated automatic valve secured in the isolation position, or

c. Isolate each affected penetration within 4 hours by use of at least one closed manual valve or blind flange; or

d. Be in at least HOT STANDBY within the next 6 hours and in COLD SHUTDOWN within the following 30 hours.

SURVEILLANCE REQUIREMENTS

4.6.3.1 Each containment isolation valve shall be demonstrated OPERABLE prior to returning the valve to service after maintenance, repair, or replacement work is performed on the valve or its associated actuator, control, or power circuit by performance of a cycling test and verification of isolation time.

*Locked or sealed closed valves may be opened on an intermittent basis under administrative control.

SURVEILLANCE REQUIREMENTS

4.6.3.2 Each containment isolation valve shall be demonstrated OPERABLE during shutdown at least once per 18 months by:

a. Verifying that on a Phase "A" Isolation test signal, each Phase "A" Isolation valve actuates to its isolation position,

b. Verifying that on a Phase "B" Isolation test signal, each Phase "B" Isolation valve actuates to its isolation position, and

c. Verifying that on a Containment Purge and Exhaust Isolation test signal, each purge and exhaust valve actuates to its isolation position.

4.6.3.3 The isolation time of each power-operated or automatic containment isolation valve shall be determined to be within its limit when tested pursuant to Specification 4.0.5.

3/4.6.4 COMBUSTIBLE GAS CONTROL

3.6.4.1 (THIS SPECIFICATION NUMBER IS NOT USED)

3.6.4.2 (THIS SPECIFICATION NUMBER IS NOT USED)

COMBUSTIBLE GAS CONTROL

HYDROGEN MIXING SYSTEM

LIMITING CONDITION FOR OPERATION

3.6.4.3 Two independent Containment Structure Recirculation Fan Systems shall be OPERABLE.

APPLICABILITY: MODES 1 and 2.

ACTION:

With one Containment Structure Recirculation Fan inoperable, restore the inoperable fan to OPERABLE status within 30 days or be in at least HOT STANDBY within the next 6 hours.

SURVEILLANCE REQUIREMENTS

4.6.4.3 Each Containment Structure Recirculation Fan System shall be demonstrated OPERABLE:

a. At least once per 92 days on a STAGGERED TEST BASIS by starting each system from the control room and verifying that the system operates for at least 15 minutes, and

b. At least once per 18 months by verifying a system flow rate of at least 4000 cfm through the hydrogen mixing flow path.

3/4.6.5 CONTAINMENT ENCLOSURE BUILDING

CONTAINMENT ENCLOSURE EMERGENCY AIR CLEANUP SYSTEM

LIMITING CONDITION FOR OPERATION

3.6.5.1 Two independent Containment Enclosure Emergency Air Cleanup Systems shall be OPERABLE.

APPLICABILITY: MODES 1, 2, 3, and 4.

ACTION:

With one Containment Enclosure Emergency Air Cleanup System inoperable, restore the inoperable system to OPERABLE status within 7 days# or be in at least HOT STANDBY within the next 6 hours and in COLD SHUTDOWN within the following 30 hours.

SURVEILLANCE REQUIREMENTS

4.6.5.1 Each Containment Enclosure Emergency Air Cleanup System shall be demonstrated OPERABLE:

a. At least once per 31 days on a STAGGERED TEST BASIS by initiating, from the control room, flow through the HEPA filters and charcoal adsorbers and verifying that the system operates for at least 15 minutes;

b. At least once per 18 months or (1) after any structural maintenance on the HEPA filter or charcoal adsorber housings, or (2) following painting, fire, or chemical release in any ventilation zone communicating with the system by:

   1) Verifying that the cleanup system satisfies the in-place penetration leakage testing acceptance criteria of less than 0.05% and uses the test procedure guidance in Regulatory Positions C.5.a, C.5.c, and C.5.d of Regulatory Guide 1.52, Revision 2, March 1978*, and the system flow rate is 2100 cfm $\pm$ 10%;

   2) Verifying, within 31 days after removal, that a laboratory analysis of a representative carbon sample obtained in accordance with Regulatory Position C.6.b of Regulatory Guide 1.52, Revision 2, March 1978, by showing a methyl iodide penetration of less than or

The 7-day allowed outage time which was entered on June 4, 2006 at 0602 hours, may be extended one time by an additional 7 days to complete repair and testing on the Containment Enclosure Ventilation Area return fan EAH-FN-31B.

* ANSI N510-1980 shall be used in place of ANSI N510-1975 referenced in Regulatory Guide 1.52, Rev. 2, March 1978.

4.6.5.1b.2 (Continued)

equal to 5% when tested at a temperature of 30°C, at a relative humidity of 95% and a face velocity of 46 fpm in accordance with ASTM-D3803-1989; and

3) Verifying a system flow rate of 2100 cfm ± 10% during system operation when tested in accordance with ANSI N510-1980.

c. After every 720 hours of charcoal adsorber operation, by verifying, within 31 days after removal that a laboratory analysis of a representative carbon sample obtained in accordance with Regulatory Position C.6.b of Regulatory Guide 1.52, Revision 2, March 1978, by showing a methyl iodide penetration of less than or equal to 5% when tested at a temperature of 30°C, at a relative humidity of 95% and a face velocity of 46 fpm in accordance with ASTM-D3803-1989.

d. At least once per 18 months by:

1) Verifying that the pressure drop across the combined HEPA filters and charcoal adsorber banks is less than 6 inches Water Gauge while operating the system at a flow rate of 2100 cfm ± 10%,

2) Verifying that the system starts on a Safety Injection test signal,

3) Verifying that the filter cross connect valves can be manually opened, and

4) Verifying that each system produces a negative pressure of greater than or equal to 0.25 inch Water Gauge in the annulus within 4 minutes after a start signal.

e. After each complete or partial replacement of a high efficiency particulate air (HEPA) filter bank, by verifying that the cleanup system satisfies the in-place penetration leakage testing acceptance criteria of less than 0.05% in accordance with ANSI N510-1980 for a dioctyl phthalate (DOP) test aerosol while operating the system at a flow rate of 2100 cfm ± 10%; and

SURVEILLANCE REQUIREMENTS

4.6.5.1 (Continued)

f. After each complete or partial replacement of a charcoal adsorber bank, by verifying that the cleanup system satisfies the in-place penetration leakage testing acceptance criteria of less than 0.05% in accordance with ANSI N510-1980 for a halogenated hydrocarbon refrigerant test gas while operating the system at a flow rate of 2100 cfm ± 10%.

CONTAINMENT ENCLOSURE BUILDING

CONTAINMENT ENCLOSURE BUILDING INTEGRITY

LIMITING CONDITION FOR OPERATION

3.6.5.2 CONTAINMENT ENCLOSURE BUILDING INTEGRITY shall be maintained.

APPLICABILITY: MODES 1, 2, 3, and 4.

ACTION:

Without CONTAINMENT ENCLOSURE BUILDING INTEGRITY, restore CONTAINMENT ENCLOSURE BUILDING INTEGRITY within 24 hours or be in at least HOT STANDBY within the next 6 hours and in COLD SHUTDOWN within the following 30 hours.

SURVEILLANCE REQUIREMENTS

4.6.5.2 CONTAINMENT ENCLOSURE BUILDING INTEGRITY shall be demonstrated at least once per 31 days by verifying that the door in each access opening is closed except when the access opening is being used for normal transit entry and exit.

CONTAINMENT ENCLOSURE BUILDING

CONTAINMENT ENCLOSURE BUILDING STRUCTURAL INTEGRITY

LIMITING CONDITION FOR OPERATION

3.6.5.3 The structural integrity of the containment enclosure building shall be maintained at a level consistent with the Containment Leakage Rate Testing Program.

APPLICABILITY: MODES 1, 2, 3, and 4.

ACTION:

With the structural integrity of the containment enclosure building not conforming to the above requirements, restore the structural integrity to within the limits within 24 hours or be in at least HOT STANDBY within the next 6 hours and in COLD SHUTDOWN within the following 30 hours.

SURVEILLANCE REQUIREMENTS

4.6.5.3 The structural integrity of the containment enclosure building shall be determined in accordance with the Containment Leakage Rate Testing Program. Any abnormal degradation of the containment enclosure building detected during the above required inspections shall be reported to the Commission in a Special Report pursuant to Specification 6.8.2 within 15 days.

3/4.7 PLANT SYSTEMS

3/4.7.1 TURBINE CYCLE

SAFETY VALVES

LIMITING CONDITION FOR OPERATION

3.7.1.1 All main steam line Code safety valves associated with each steam generator shall be OPERABLE with lift settings as specified in Table 3.7-2.

APPLICABILITY: MODES 1, 2, and 3[#].

ACTION:

With four reactor coolant loops and associated steam generators in operation and with one or more main steam line Code safety valves inoperable, operation in MODES 1, 2, and 3 may proceed, provided that within 4 hours either the inoperable valve is restored to OPERABLE status or the Power Range Neutron Flux High Trip Setpoint is reduced per Table 3.7-1; otherwise, be in at least HOT STANDBY within the next 6 hours and in COLD SHUTDOWN within the following 30 hours.

SURVEILLANCE REQUIREMENTS

4.7.1.1 No additional requirements other than those required by Specification 4.0.5.

#Entry into this MODE is permitted for up to 24 hours to perform post-modification or post-maintenance testing to verify OPERABILITY of components. ACTION requirements shall not apply until OPERABILITY has been verified.

TABLE 3.7-1

MAXIMUM ALLOWABLE POWER RANGE NEUTRON FLUX HIGH SETPOINT WITH INOPERABLE STEAM LINE SAFETY VALVES DURING FOUR-LOOP OPERATION

MAXIMUM NUMBER OF INOPERABLE SAFETY VALVES ON ANY OPERATING STEAM GENERATOR	MAXIMUM ALLOWABLE POWER RANGE NEUTRON FLUX HIGH SETPOINT (PERCENT OF RATED THERMAL POWER)
1	60
2	42
3	25

TABLE 3.7-2

STEAM LINE SAFETY VALVES PER LOOP

VALVE NUMBER					
Loop 1	Loop 2	Loop 3	Loop 4	LIFT SETTING* (± 3%)**	ORIFICE SIZE
V6	V22	V36	V50	1185 psig	16.0 sq. in.
V7	V23	V37	V51	1195 psig	16.0 sq. in.
V8	V24	V38	V52	1205 psig	16.0 sq. in.
V9	V25	V39	V53	1215 psig	16.0 sq. in.
V10	V26	V40	V54	1225 psig	16.0 sq. in.

*The lift setting pressure shall correspond to ambient conditions of the valve at nominal operating temperature and pressure.

**Within ±1% following main steam line Code safety valve testing.

LIMITING CONDITION FOR OPERATION

3.7.1.2 At least three independent steam generator auxiliary feedwater pumps and associated flow paths shall be OPERABLE with:

a. One motor-driven emergency feedwater pump, and one startup feedwater pump capable of being powered from an emergency bus and capable of being aligned to the dedicated water volume in the condensate storage tank, and

b. One steam turbine-driven emergency feedwater pump capable of being powered from an OPERABLE steam supply system.

APPLICABILITY: MODES 1, 2, and 3.

ACTION:

a. With one auxiliary feedwater pump inoperable, restore the required auxiliary feedwater pumps to OPERABLE status within 72 hours or be in at least HOT STANDBY within the next 6 hours and in HOT SHUTDOWN within the following 6 hours.

b. With two emergency feedwater pumps inoperable, restore at least one emergency feedwater pump to OPERABLE status within 12 hours and restore both emergency feedwater pumps to OPERABLE status within 72 hours, or be in at least HOT STANDBY within the next 6 hours and in COLD SHUTDOWN within the following 30 hours.

c. With one emergency feedwater pump and the startup feedwater pump inoperable, restore both emergency feedwater pumps to OPERABLE status within 24 hours and all three pumps to OPERABLE status within 72 hours or be in at least HOT STANDBY within the next 6 hours and in HOT SHUTDOWN within the following 6 hours.

d. With three auxiliary feedwater pumps inoperable, immediately initiate corrective action to restore at least one auxiliary feedwater pump to OPERABLE status as soon as possible.

SURVEILLANCE REQUIREMENTS

4.7.1.2.1 Each auxiliary feedwater pump shall be demonstrated OPERABLE:

a. At least once per 31 days by:

1) Verifying that each non-automatic valve in the flow path that is not locked, sealed, or otherwise secured in position is in its correct position;

2) Verifying that each automatic valve in the flow path is in the fully open position whenever the Auxiliary Feedwater System is placed in automatic control or when above 10% RATED THERMAL POWER; and

SURVEILLANCE REQUIREMENTS

4.7.1.2.1a. (Continued)

3) Verifying that valves FW-156 and FW-163 are OPERABLE for alignment of the startup feedwater pump to the emergency feedwater header.

b. At least once per 92 days on a STAGGERED TEST BASIS by verifying the following pumps develop the required discharge pressure and flow as specified in the Technical Requirements Manual:

1) The motor-driven emergency feedwater pump;

2) The steam turbine-driven emergency feedwater pump when the secondary steam supply pressure is greater than 500 psig. The provisions of Specification 4.0.4 are not applicable for entry into MODE 3;

3) The startup feedwater pump.

c. At least once per 18 months during shutdown by:

1) Verifying that each automatic valve in the flow path actuates to its correct position upon receipt of an Emergency Feedwater System Actuation test signal;

2) Verifying that each emergency feedwater pump starts as designed automatically upon receipt of an Emergency Feedwater Actuation System test signal;

3) Verifying that with all manual actions, including power source and valve alignment, the startup feedwater pump starts within the required elapsed time; and

4) Verifying that each emergency feedwater control valve closes on receipt of a high flow test signal.

SURVEILLANCE REQUIREMENTS

4.7.1.2.2 Auxiliary feedwater flow paths to each steam generator shall be demonstrated OPERABLE following each COLD SHUTDOWN of greater than 30 days, or after maintenance on an auxiliary feedwater pump that could have an effect upon pump performance, prior to entering MODE 2 by verifying normal flow to each steam generator from:

a. Each emergency feedwater pump, and

b. The startup feedwater pump via the main feedwater flow path and via the emergency feedwater header.

TURBINE CYCLE

CONDENSATE STORAGE TANK

LIMITING CONDITION FOR OPERATION

3.7.1.3 The condensate storage tank (CST) system shall be OPERABLE with

a. A volume of 212,000 gallons of water contained in the condensate storage tank, and

b. A concrete CST enclosure that is capable of retaining 212,000 gallons of water.

APPLICABILITY: MODES 1, 2, and 3.

ACTION:

With the CST or the CST enclosure inoperable, within 4 hours restore the CST and the CST enclosure to OPERABLE status or be in at least HOT STANDBY within the next 6 hours and in HOT SHUTDOWN within the following 6 hours.

SURVEILLANCE REQUIREMENTS

4.7.1.3a. The CST shall be demonstrated OPERABLE at least once per 12 hours by verifying the contained water volume in the CST is within its limits.

b. The CST enclosure shall be demonstrated OPERABLE at least once per 18 months by an inspection to verify that CST enclosure integrity is maintained.

TURBINE CYCLE

SPECIFIC ACTIVITY

LIMITING CONDITION FOR OPERATION

3.7.1.4 The specific activity of the secondary coolant shall be less than or equal to 0.1 μCi/gm DOSE EQUIVALENT I-131.

APPLICABILITY: MODES 1, 2, 3, and 4*.

ACTION:

With the specific activity of the secondary coolant greater than 0.1 μCi/gm DOSE EQUIVALENT I-131, be in at least HOT STANDBY within 6 hours and in COLD SHUTDOWN within the following 30 hours.

SURVEILLANCE REQUIREMENTS

4.7.1.4 At least once every 31 days, verify the specific activity of the secondary coolant is less than or equal to 0.1 μCi/gm DOSE EQUIVALENT I-131.

*The provisions of Specification 4.0.4 are not applicable for entry into MODE 4, however, once steam generator pressure exceeds 100 psig, the requirements of Specification 4.7.1.4 must be met within 12 hours if not performed within the past 31 days.

TABLE 4.7-1

(THIS TABLE NUMBER IS NOT USED)

TURBINE CYCLE

MAIN STEAM LINE ISOLATION VALVES

LIMITING CONDITION FOR OPERATION

3.7.1.5 Each main steam line isolation valve (MSIV) shall be OPERABLE.

APPLICABILITY: MODES 1, 2, and 3#.

ACTION:

MODE 1:

With one MSIV inoperable but open, POWER OPERATION may continue provided the inoperable valve is restored to OPERABLE status within 4 hours; otherwise be in HOT STANDBY within the next 6 hours and in HOT SHUTDOWN within the following 6 hours.

MODES 2 and 3:

With one MSIV inoperable, subsequent operation in MODE 2 or 3 may proceed provided the isolation valve is maintained closed. Otherwise, be in HOT STANDBY within the next 6 hours and in HOT SHUTDOWN within the following 6 hours.

SURVEILLANCE REQUIREMENTS

4.7.1.5 Each MSIV shall be demonstrated OPERABLE by verifying full closure within 5.0 seconds when tested pursuant to Specification 4.0.5. The provisions of Specification 4.0.4 are not applicable for entry into MODE 3.

#Entry into this MODE is permitted for up to 24 hours to perform post-modification or post-maintenance testing to verify OPERABILITY of components. ACTION requirements shall not apply until OPERABILITY has been verified.

TURBINE CYCLE

ATMOSPHERIC RELIEF VALVES

LIMITING CONDITION FOR OPERATION

3.7.1.6 At least four atmospheric relief valves and associated manual controls including the safety-related gas supply systems shall be OPERABLE.

APPLICABILITY: MODES 1, 2, 3#, and 4*#.

ACTION:

a. With one less than the required atmospheric relief valves OPERABLE, restore the required atmospheric relief valves to OPERABLE status within 7 days; or be in at least HOT STANDBY within the next 12 hours.

b. With two less than the required atmospheric relief valves OPERABLE, restore at least three atmospheric relief valves to OPERABLE status within 72 hours or be in at least HOT STANDBY within the next 6 hours.

SURVEILLANCE REQUIREMENTS

4.7.1.6 Each atmospheric relief valve and associated manual controls including the safety-related gas supply systems shall be demonstrated OPERABLE:

a. At least once per 24 hours by verifying that the nitrogen accumulator tank is at a pressure greater than or equal to 500 psig.

b. Prior to startup following any refueling shutdown or cold shutdown of 30 days or longer, verify that all valves will open and close fully by operation of manual controls.

---

*When steam generators are being used for decay heat removal.

#Entry into this MODE is permitted for up to 24 hours to perform post-modification or post-maintenance testing to verify OPERABILITY of components. ACTION requirements shall not apply until OPERABILITY has been verified.

3/4.7.2 STEAM GENERATOR PRESSURE/TEMPERATURE LIMITATION

LIMITING CONDITION FOR OPERATION

3.7.2 The temperatures of both the reactor and secondary coolants in the steam generators shall be greater than 70°F when the pressure of either coolant in the steam generator is greater than 200 psig.

APPLICABILITY: At all times.

ACTION:

With the requirements of the above specification not satisfied:

a. Reduce the steam generator pressure of the applicable side to less than or equal to 200 psig within 30 minutes, and

b. Perform an engineering evaluation to determine the effect of the overpressurization on the structural integrity of the steam generator. Determine that the steam generator remains acceptable for continued operation prior to increasing its temperatures above 200°F.

SURVEILLANCE REQUIREMENTS

4.7.2 The pressure in each side of the steam generator shall be determined to be less than 200 psig at least once per hour when the temperature of either the reactor or secondary coolant is less than 70°F.

3/4.7.3 PRIMARY COMPONENT COOLING WATER SYSTEM

LIMITING CONDITION FOR OPERATION

3.7.3 At least two independent primary component cooling water loops shall be OPERABLE, including one OPERABLE pump in each loop.

APPLICABILITY: MODES 1, 2, 3, and 4.

ACTION:

With one primary component cooling water (PCCW) loop inoperable, restore the required primary component cooling water loop to OPERABLE status within 72 hours or be in at least HOT STANDBY within the next 6 hours and in COLD SHUTDOWN within the following 30 hours.

SURVEILLANCE REQUIREMENTS

4.7.3 At least two primary component cooling water loops shall be demonstrated OPERABLE:

a. At least once per 31 days by verifying that each valve (manual, power-operated, or automatic) servicing safety-related equipment that is not locked, sealed, or otherwise secured in position is in its correct position; and

b. At least once per 18 months during shutdown, by verifying that each automatic valve servicing safety-related equipment actuates to its correct position on its associated Engineered Safety Feature actuation signal.

3/4.7.4 SERVICE WATER SYSTEM/ULTIMATE HEAT SINK

LIMITING CONDITION FOR OPERATION

3.7.4 The Service Water System shall be OPERABLE with:

a. An OPERABLE service water pumphouse and two service water loops with one OPERABLE service water pump in each loop,

b. An OPERABLE mechanical draft cooling tower and two cooling tower service water loops with one OPERABLE cooling tower service water pump in each loop, and

c. A portable cooling tower makeup system stored in its design operational readiness state.

APPLICABILITY: MODES 1, 2, 3, and 4.

ACTION:

a. With one service water loop inoperable, return the loop to OPERABLE status within 72 hours, or be in at least HOT STANDBY within 6 hours and in COLD SHUTDOWN within the following 30 hours.

b. With one cooling tower service water loop or one cooling tower cell inoperable, return the affected loop or cell to OPERABLE status within 7 days, or be in at least HOT STANDBY within 6 hours and in COLD SHUTDOWN within the following 30 hours.

c. With two cooling tower service water loops or the mechanical draft cooling tower inoperable, return at least one loop and the mechanical draft cooling tower to OPERABLE status within 72 hours, or be in at least HOT STANDBY within 6 hours and in COLD SHUTDOWN within the following 30 hours.

d. With two loops (except as described in c) or the service water pumphouse inoperable, return at least one of the affected loops and the service water pumphouse to OPERABLE status within 24 hours, or be in at least HOT STANDBY within 6 hours and in COLD SHUTDOWN within the following 30 hours.

e. With the portable tower makeup pump system not stored in its design operational readiness state, restore the portable tower makeup pump system to its required condition within 72 hours, or continue operation and notify the NRC within the following 1 hour in accordance with the requirements of 10 CFR 50.72 of actions to ensure an adequate supply of makeup water for the service water cooling tower for a minimum of 30 days.

3/4.7.4 SERVICE WATER SYSTEM/ULTIMATE HEAT SINK

SURVEILLANCE REQUIREMENTS

4.7.4.1 Each service water loop shall be demonstrated OPERABLE:

a. At least once per 31 days by verifying that each valve (manual, power-operated, or automatic) servicing safety related equipment that is not locked, sealed, or otherwise secured in position is in its correct position; and

b. At least once per 18 months during shutdown, by verifying that each automatic valve servicing safety-related equipment actuates to its correct position on its associated Engineered Safety Feature actuation test signal.

4.7.4.2 Each service water cooling tower loop shall be demonstrated OPERABLE:

a. At least once per 31 days by verifying that each valve (manual, power-operated, or automatic) servicing safety related equipment that is not locked, sealed, or otherwise secured in position is in its correct position; and

b. At least once per 18 months during shutdown, by verifying that:

1) Each automatic valve servicing safety-related equipment actuates to its correct position on its associated Engineered Safety Feature actuation test signal,

2) Each automatic valve in the flowpath actuates to its correct position on a Tower Actuation (TA) test signal and

3) Each service water cooling tower pump starts automatically on a TA signal.

4.7.4.3 The service water pumphouse shall be demonstrated OPERABLE at least once per 24 hours by verifying the water level to be at or above 5'-0" (-36'-0" Mean Sea Level).

4.7.4.4 The mechanical draft cooling tower shall be demonstrated OPERABLE:

a. At least once per 24 hours by verifying the water in the mechanical draft cooling tower basin to be at a level of greater than or equal to 42.15* feet.

b. At least once per week by verifying that the water in the cooling tower basin to be at a bulk average temperature of less than or equal to 70°F.

---

*With the cooling tower in operation with valves aligned for tunnel heat treatment, the tower basin level shall be maintained at greater than or equal to 40.55 feet.

3/4.7.4 SERVICE WATER SYSTEM/UTIMATE HEAT SINK

SURVEILLANCE REQUIREMENTS

c. At least once per 31 days by:

   1) Starting from the control room each cooling tower fan that is required to be OPERABLE and operating each of these fans for at least 15 minutes, and

   2) Verifying that the portable tower makeup pump system is stored in its design operational readiness state.

d. At least once per 18 months by verifying that the portable tower makeup pump develops a flow greater than or equal to 200 gpm.

3/4.7.5 (THIS SPECIFICATION NUMBER IS NOT USED)

PAGE INTENTIONALLY BLANK

3/4.7.6 CONTROL ROOM SUBSYSTEM

EMERGENCY MAKEUP AIR AND FILTRATION

LIMITING CONDITION FOR OPERATION

3.7.6.1 Two independent Control Room Emergency Makeup Air and Filtration Subsystems shall be OPERABLE.

APPLICABILITY: All MODES

ACTION:

MODES 1, 2, 3 and 4:

With one Control Room Emergency Makeup Air and Filtration Subsystem inoperable, restore the inoperable system to OPERABLE status within 7 days or be in at least HOT STANDBY within the next 6 hours and in COLD SHUTDOWN within the following 30 hours.

MODES 5 and 6:

a. With one Control Room Emergency Makeup Air and Filtration Subsystem inoperable, restore the inoperable system to OPERABLE status within 7 days or initiate and maintain operation of the remaining OPERABLE Control Room Emergency Makeup Air and Filtration Subsystem in the filtration/recirculation mode.

b. With both Control Room Emergency Makeup Air and Filtration Subsystems inoperable, or with the OPERABLE Control Room Emergency Makeup Air and Filtration Subsystem, required to be in the filtration/recirculation mode by ACTION a., not capable of being powered by an OPERABLE emergency power source, suspend all operations involving CORE ALTERATIONS.

SURVEILLANCE REQUIREMENTS

4.7.6.1 Each Control Room Emergency Makeup Air and Filtration Subsystem shall be demonstrated OPERABLE:

a. At least once per 31 days on a STAGGERED TEST BASIS by initiating, from the control room, flow through the HEPA filters and charcoal adsorbers and verifying that the system operates for at least 10 continuous hours with the heaters operating;

SURVEILLANCE REQUIREMENTS (Continued)

b. At least once per 18 months or (1) after any structural maintenance on the HEPA filter or charcoal adsorber housings, or (2) following painting, fire or chemical release in any ventilation zone communicating with the system by:

1) Verifying that the filtration system satisfies the in-place penetration and bypass leakage testing acceptance criteria of less than .05% and uses the test procedure guidance in Regulatory Position C.5.a, C.5.c, and C.5.d of Regulatory Guide 1.52, Revision 2, March 1978*, and the system flow rate is 1100 cfm ± 10%;

2) Verifying, within 31 days after removal, that a laboratory analysis of a representative carbon sample obtained in accordance with Regulatory Position C.6.b of Regulatory Guide 1.52, Revision 2, March 1978, by showing a methyl iodide penetration of less than or equal to 2.5% when tested at a temperature of 30°C, at a relative humidity of 70% and a face velocity of 34.5 fpm (Train A) and 58.3 fpm (Train B) in accordance with ASTM-D-3803-1989;

3) Verifying a system flow rate of 1100 cfm ± 10% during system operation when tested in accordance with ANSI N510-1980.

c. After every 720 hours of charcoal adsorber operation, by verifying, within 31 days after removal, that a laboratory analysis of a representative carbon sample obtained in accordance with Regulatory Position C.6.b of Regulatory Guide 1.52, Revision 2, March 1978, by showing a methyl iodide penetration of less than or equal to 2.5% when tested at a temperature of 30°C, at a relative humidity of 70% and a face velocity of 34.5 fpm (Train A) and 58.3 fpm (Train B) in accordance with ASTM-D-3803-1989;

d. At least once per 18 months by:

1) Verifying that the pressure drop across the combined HEPA filters and charcoal adsorber banks, for filter CBA-F-38, is less than 2.8 inches Water Gauge while operating the system at a flow rate of 1100 cfm ± 10%; and verifying that the pressure drop across the combined HEPA filters and charcoal adsorber banks, for filter CBA-F-8038, is less than 6.3 inches Water Gauge while operating the system at a flow rate of 1100 cfm ± 10%.

*ANSI N510-1980 shall be used in place of ANSI N510-1975 as referenced in Regulatory Guide 1.52, Revision 2, March 1978.

SURVEILLANCE REQUIREMENTS (Continued)

2) Verifying that upon generation of an 'S' test signal, the following automatic system functions occur:

   a. The normal makeup air fan(s) trip off and the normal makeup air isolation damper(s) close;

   b. The control room exhaust subsystem isolation damper(s) close, and the exhaust fan trips off;

   c. The control room emergency makeup air and filtration subsystem actuates with flows through the HEPA filters and charcoal adsorber banks;

3) Verifying that upon generation of Remote Intake High Radiation test signal, the following automatic system functions occur:

   a. The normal makeup air fan(s) trip off and the normal makeup air isolation damper(s) close;

   b. The control room exhaust subsystem isolation damper(s) close, and the exhaust fan trips off;

   c. The control room emergency makeup air and filtration subsystem actuates with flows through the HEPA filters and charcoal adsorber banks;

4) Verifying that the Control Room Emergency Makeup Air and Filtration Subsystem maintains the control room at a positive pressure of greater than or equal to 1/8 inch Water Gauge at less than or equal to a pressurization flow of 600 cfm relative to adjacent areas during system operation; and

5) Verifying that the heaters dissipate at least 3.24 kW (based on design rated voltage of 460V) when tested in accordance with ANSI N510-1980.

e. After each complete or partial replacement of a HEPA filter bank, by verifying that the filtration system satisfies the in-place penetration and bypass leakage testing acceptance criteria of less than .05% in accordance with ANSI N510-1980 for a DOP test aerosol while operating the system at a flow rate of 1100 cfm ± 10%; and

f. After each complete or partial replacement of a charcoal adsorber bank, by verifying that the filtration system satisfies the in-place penetration and bypass leakage testing acceptance criteria of less than .05% in accordance with ANSI N510-1980 for a halogenated hydrocarbon refrigerant test gas while operating the system at a flow rate of 1100 cfm ± 10%.

3/4.7.6 CONTROL ROOM SUBSYSTEMS

AIR CONDITIONING

LIMITING CONDITION FOR OPERATION

3.7.6.2 Two independent Control Room Air Conditioning Subsystems shall be OPERABLE.

APPLICABILITY: All MODES

ACTION:

MODES 1, 2, 3 and 4:

With one Control Room Air Conditioning Subsystem inoperable, restore the inoperable system to OPERABLE status within 30* days or be in at least HOT STANDBY within the next 6 hours and in COLD SHUTDOWN within the following 30 hours.

MODES 5 and 6:

a. With one Control Room Air Conditioning Subsystem inoperable, restore the inoperable system to OPERABLE status within 30* days or initiate and maintain operation of the remaining OPERABLE Control Room Air Conditioning Subsystem or immediately suspend all operations involving CORE ALTERATION.

b. With both Control Room Air Conditioning Subsystems inoperable, or with the OPERABLE Control Room Air Conditioning Subsystem unable to maintain temperature below the limiting equipment qualification temperature in the control room area, suspend all operations involving CORE ALTERATIONS.

SURVEILLANCE REQUIREMENTS

4.7.6.2 Each Control Room Air Conditioning Subsystem shall be demonstrated OPERABLE at least once per 92 days by verifying the ability to maintain temperature in the control room area below the limiting equipment qualification temperature for 24 hours.

---

* For cycle 7, the allowable outage time may be extended to 60 days, on a one-time basis, for each train to implement modifications to the Control Room Air Conditioning Subsystems. The provisions of Specifications 3.0.4 and 4.0.4 are not applicable during the implementation of modifications to the Air Conditioning Subsystems.

3/4.7.7 SNUBBERS

LIMITING CONDITION FOR OPERATION

3.7.7 All snubbers shall be OPERABLE. The only snubbers excluded from the requirements are those installed on nonsafety-related systems and then only if their failure or failure of the system on which they are installed would have no adverse affect on any safety-related system.

APPLICABILITY: MODES 1, 2, 3, and 4. MODES 5 and 6 for snubbers located on systems required OPERABLE in those MODES.

ACTION:

With one or more snubbers inoperable on any system, within 72 hours replace or restore the inoperable snubber(s) to OPERABLE status and perform an engineering evaluation in accordance with the approved augmented inservice inspection program on the attached component or declare the attached system inoperable and follow the appropriate ACTION statement for that system.

SURVEILLANCE REQUIREMENTS

4.7.7 Each snubber shall be demonstrated OPERABLE by performance of the requirements of an approved augmented inservice inspection program.

3/4.7.8 SEALED SOURCE CONTAMINATION

LIMITING CONDITION FOR OPERATION

3.7.8 Each sealed source containing radioactive material either in excess of 100 microCuries of beta and/or gamma emitting material or 5 microCuries of alpha emitting material shall be free of greater than or equal to 0.005 microCurie of removable contamination.

APPLICABILITY: At all times.

ACTION:

a. With a sealed source having removable contamination in excess of the above limits, immediately withdraw the sealed source from use and either:

   1. Decontaminate and repair the sealed source, or

   2. Dispose of the sealed source in accordance with Commission Regulations.

b. The provisions of Specification 3.0.3 are not applicable.

SURVEILLANCE REQUIREMENTS

4.7.8.1 Test Requirements - Each sealed source shall be tested for leakage and/or contamination by:

a. The licensee, or

b. Other persons specifically authorized by the Commission or an Agreement State.

The test method shall have a detection sensitivity of at least 0.005 microCurie per test sample.

4.7.8.2 Test Frequencies - Each category of sealed sources (excluding startup sources and fission detectors previously subjected to core flux) shall be tested at the frequency described below.

a. Sources in use - At least once per 6 months for all sealed sources containing radioactive materials:

   1. With a half-life greater than 30 days (excluding Hydrogen 3), and

   2. In any form other than gas.

SURVEILLANCE REQUIREMENTS

4.7.8.2 (Continued)

b. Stored sources not in use - Each sealed source and fission detector shall be tested prior to use or transfer to another licensee unless tested within the previous 6 months. Sealed sources and fission detectors transferred without a certificate indicating the last test date shall be tested prior to being placed into use; and

c. Startup sources and fission detectors - Each sealed startup source and fission detector shall be tested within 31 days prior to being subjected to core flux or installed in the core and following repair or maintenance to the source.

4.7.8.3 Reports - A report shall be prepared and submitted to the Commission on an annual basis if sealed source or fission detector leakage tests reveal the presence of greater than or equal to 0.005 microCurie of removable contamination.

3/4.7.9 (This specification number is not used)

3/4.7.10 (THIS SPECIFICATION NUMBER IS NOT USED)

TABLE 3.7-3

(THIS TABLE NUMBER IS NOT USED)

3/4.8 ELECTRICAL POWER SYSTEMS

3/4.8.1 A.C. SOURCES

OPERATING

LIMITING CONDITION FOR OPERATION

3.8.1.1 As a minimum, the following A.C. electrical power sources shall be OPERABLE:

a. Two physically independent circuits between the offsite transmission network and the onsite Class 1E Distribution System, and

b. Two separate and independent diesel generators, each with:

1) A separate day fuel tank containing a minimum fuel volume fraction of 3/8 (600 gallons),

2) A separate Fuel Storage System containing a minimum volume of 62,000 gallons of fuel,

3) A separate fuel transfer pump,

4) Lubricating oil storage containing a minimum total volume of 275 gallons of lubricating oil, and

5) Capability to transfer lubricating oil from storage to the diesel generator unit.

APPLICABILITY: MODES 1, 2, 3, and 4.

ACTION:

a. With an offsite circuit of the above required A.C. electrical power sources inoperable, demonstrate the OPERABILITY of the remaining A.C. source by performing Specification 4.8.1.1.1a. within 1 hour and at least once per 8 hours thereafter; restore at least two offsite circuits to OPERABLE status within 72 hours or be in at least HOT STANDBY within the next 6 hours and in COLD SHUTDOWN within the following 30 hours.

LIMITING CONDITION FOR OPERATION

3.8.1.1 (Continued)

ACTION:

b. With a diesel generator inoperable:

1) Demonstrate the OPERABILITY of the remaining A.C. sources by performing Specification 4.8.1.1.1a within 1 hour and at least once per 8 hours thereafter. Perform ACTION d. Demonstrate the OPERABILITY of the remaining diesel generator by performing Specification 4.8.1.1.2a.5) within 24 hours.*

2) Restore at least two diesel generators to OPERABLE status within 72 hours or be in at least HOT STANDBY within the next 6 hours and in COLD SHUTDOWN within the following 30 hours, unless the following condition exists:

(a) The requirement for restoration of the diesel generator to OPERABLE status within 72 hours may be extended to 14 days if the Supplemental Emergency Power System (SEPS) is available, as specified in the Bases, and

(b) If at any time the SEPS availability cannot be met, either restore the SEPS to available status within 72 hours (not to exceed 14 days from the time the diesel generator originally became inoperable), or be in at least HOT STANDBY within the next 6 hours and in COLD SHUTDOWN within the following 30 hours.

* The OPERABILITY of the remaining diesel generator need not be verified if it has been successfully operated within the last 24 hours, or if currently operating, or if the diesel generator became inoperable due to:

1. Preplanned preventive maintenance or testing,

2. An inoperable support system with no potential common mode failure for the remaining diesel generator, or

3. An independently testable component with no potential common mode failure for the remaining diesel generator.

LIMITING CONDITION FOR OPERATION

3.8.1.1 (Continued)

ACTION:

c. With one offsite circuit and one diesel generator of the above required A.C. electrical power sources inoperable:

1) Demonstrate the OPERABILITY of the remaining A.C. source by performing Specification 4.8.1.1.1a. within 1 hour and at least once per 8 hours thereafter. Perform ACTION d. Demonstrate the OPERABILITY of the remaining diesel generator by performing Specification 4.8.1.1.2a.5) within 8 hours.*

2) Restore at least one of the inoperable sources to OPERABLE status within 12 hours or be in at least HOT STANDBY within the next 6 hours and in COLD SHUTDOWN within the following 30 hours.

3) Restore at least two offsite circuits and two diesel generators to OPERABLE status within 72 hours from the time of initial loss or be in at least HOT STANDBY within the next 6 hours and in COLD SHUTDOWN within the following 30 hours, unless the following condition exists:

(a) The requirement for restoration of the diesel generators to OPERABLE status within 72 hours may be extended to 14 days if the Supplemental emergency Power System (SEPS) is available, as specified in the Bases, and

(b) If at any time the SEPS availability cannot be met, either restore the SEPS to available status within 72 hours (not to exceed 14 days from the time the diesel generator originally became inoperable), or be in at least HOT STANDBY within the next 6 hours and in COLD SHUTDOWN within the following 30 hours.

* The OPERABILITY of the remaining diesel generator need not be verified if it has been successfully operated within the last 24 hours, or if currently operating, or if the diesel generator became inoperable due to:

1. Preplanned preventive maintenance or testing,

2. An inoperable support system with no potential common mode failure for the remaining diesel generator, or

3. An independently testable component with no potential common mode failure for the remaining diesel generator.

3.8.1.1 (Continued)

ACTION:

d. With one diesel generator inoperable in addition to ACTION b. or c. above, verify that:

1. All required systems, subsystems, trains, components, and devices that depend on the remaining OPERABLE diesel generator as a source of emergency power are also OPERABLE, and
2. When in MODE 1, 2, or 3, the steam-driven emergency feedwater pump is OPERABLE.

If these conditions are not satisfied within 4 hours be in at least HOT STANDBY within the next 6 hours and in COLD SHUTDOWN within the following 30 hours.

e. With two of the above required offsite A.C. circuits inoperable; restore at least one of the inoperable offsite sources to OPERABLE status within 24 hours or be in at least HOT STANDBY within the next 6 hours. With only one offsite source restored, restore at least two offsite circuits to OPERABLE status within 72 hours from time of initial loss or be in at least HOT STANDBY within the next 6 hours and in COLD SHUTDOWN within the following 30 hours.

f. With two of the above required diesel generators inoperable:

1) Demonstrate the OPERABILITY of two offsite A.C. circuits by performing Specification 4.8.1.1.1a. within 1 hour and at least once per 8 hours thereafter.

2) Restore at least one diesel generator to OPERABLE status within 2 hours or be in at least HOT STANDBY within the next 6 hours and in COLD SHUTDOWN within the following 30 hours,

3) Restore at least two diesel generators to OPERABLE status within 72 hours from the time of initial loss or be in at least HOT STANDBY within the next 6 hours and in COLD SHUTDOWN within the following 30 hours, unless the following condition exists:

(a) The requirement for restoration of the diesel generators to OPERABLE status within 72 hours may be extended to 14 days if the Supplemental Emergency Power System (SEPS) is available, as specified in the Bases, and

(b) If at any time the SEPS availability cannot be met, either restore the SEPS to available status within 72 hours (not to exceed 14 days from the time the diesel generator originally became inoperable), or be in at least HOT STANDBY within the next 6 hours and in COLD SHUTDOWN within the following 30 hours.

SURVEILLANCE REQUIREMENTS

4.8.1.1.1 Each of the above required independent circuits between the offsite transmission network and the Onsite Class 1E Distribution System shall be:

a. Determined OPERABLE at least once per 7 days by verifying correct breaker alignments, indicated power availability, and

b. Demonstrated OPERABLE at least once per 18 months by transferring (manually and automatically) unit power supply from the normal circuit to the alternate circuit.*

4.8.1.1.2 Each diesel generator shall be demonstrated OPERABLE.**

a. At least once per 31 days on a STAGGERED TEST BASIS by:

1) Verifying the fuel level in the day fuel tank;

2) Verifying the fuel level in the fuel storage tank;

3) Verifying the fuel transfer pump starts and transfers fuel from the storage system to the day tank;

4) Verifying the lubricating oil inventory in storage;

5) Verifying the diesel starts from standby conditions and attains a steady-state generator voltage and frequency of 4160 ± 420 volts and 60 ± 1.2 Hz.***

* This surveillance requirement shall not be performed in Mode 1 or 2.

** All planned starts for the purpose of these surveillances may be preceded by an engine prelube period.

*** A modified start involving idling and gradual acceleration to synchronous speed may be used for this surveillance. When modified start procedures are not used, the time, voltage, and frequency tolerances of Specification 4.8.1.1.2e must be met.

4.8.1.1.2 (Continued)

6) Verifying the generator is synchronized, gradually loaded**** to greater than or equal to 5600 kW and less than or equal to 6100 kW, and operates within this load band for at least 60 minutes, and until stable engine operating temperature is attained; and

7) Verifying the diesel generator is aligned to provide standby power to the associated emergency busses.

b. At least once per 31 days by checking for and removing accumulated water from the day fuel tank;

c. At least once per 31 days by checking for and removing accumulated water from the fuel oil storage tanks;

d. By verifying fuel oil properties of new and stored fuel oil are tested in accordance with, and maintained within the limits of, the Diesel Fuel Oil Testing Program;

e. At least once every 184 days# by verifying the diesel starts from standby condition and achieves:

1) A generator voltage and frequency greater than or equal to 3740 volts and 58.8 Hz within 10 seconds after the start signal, and

2) A steady-state generator voltage and frequency of 4160 ± 420 volts and 60 ± 1.2 Hz.

**** Diesel generator loading may be in accordance with manufacturers recommendations, including a warmup period. Momentary transients outside the load range, due to changing bus conditions, do not invalidate the test. In addition, this surveillance shall be preceded by and immediately follow without shutdown a successful performance of Specification 4.8.1.1.2a.5) or 4.8.1.1.2e.

Performance of Specification 4.8.1.1.2a.6) must immediately follow this surveillance. Additionally, performance of Specification 4.8.1.1.2e satisfies Specification 4.8.1.1.2a.5).

SURVEILLANCE REQUIREMENTS

4.8.1.1.2 (Continued)

f. At least once per 18 months, during shutdown[##], by:

1) (NOT USED)

2) Verifying the generator capability to reject a load of greater than or equal to 671 kW while maintaining voltage at 4160 ± 420 volts and frequency at 60 ± 4.0 Hz;

3) Verifying the generator capability to reject a load of 6083 kW without tripping. The generator voltage shall not exceed 4784 volts during and following the load rejection;

4) Simulating a loss-of-offsite power by itself, and:

a) Verifying deenergization of the emergency busses and load shedding from the emergency busses, and

b) Verifying the diesel starts from standby conditions[###] on the loss of offsite power signal, energizes the emergency busses with permanently connected loads within 12 seconds, energizes the auto-connected shutdown loads through the emergency power sequencer and operates for greater than or equal to 5 minutes while its generator is loaded with the shutdown loads. After energization, the steady-state voltage and frequency of the emergency busses shall be maintained at 4160 ± 420 volts and 60 ± 1.2 Hz during this test.

5) Verifying that on an SI actuation test signal, without loss-of-offsite power, the diesel generator starts from standby conditions[###] on the auto-start signal and operates on standby for greater than or equal to 5 minutes. The generator voltage and frequency shall be greater than or equal to 3740 volts and 58.8 Hz within 10 seconds after the auto-start signal; the steady-state generator voltage and frequency shall be maintained at 4160 ± 420 volts and 60 ± 1.2 Hz during this test;

Selected surveillance requirements, or portions thereof, may be performed during conditions or modes other than shutdown, provided an evaluation supports safe conduct of that surveillance in a condition or mode that is consistent with safe operation of the plant. (Ref. NRC GL 91-04)

Starting of the diesel for Specifications 4.8.1.1.2f.4) and 4.8.1.1.2f.5) may be performed with the engine at or near normal operating temperature.

4.8.1.1.2 (Continued)

6) Simulating a loss-of-offsite power in conjunction with an SI actuation test signal; and

   a) Verifying deenergization of the emergency busses and load shedding from the emergency busses;

   b) Verifying the diesel starts from standby conditions, on the auto-start signal, energizes the emergency busses with permanently connected loads within 10 seconds, energizes the auto-connected emergency (accident) loads through the emergency power sequencer and operates for greater than or equal to 5 minutes while its generator is loaded with the emergency loads. After energization, the steady-state voltage and frequency of the emergency busses shall be maintained at 4160 ± 420 volts and 60 ± 1.2 Hz during this test; and

   c) Verifying that all automatic diesel generator trips, except engine overspeed, low lube oil pressure, 4160-volt bus fault, and generator differential, are automatically bypassed upon loss of voltage on the emergency bus concurrent with a Safety Injection actuation signal.

7) Verifying full-load carrying capability of the diesel generator for an interval of not less than 24 hours:

   a) At a load greater than or equal to 5600 kW and less than or equal to 6100 kW,#### or

   b) Should auto-connected loads be equal to or greater than 6100 kW;

      1. Verify the diesel generator operates for an interval of not less than 2 hours at a load greater than or equal to 6363 kW and less than or equal to 6700 kW.#### For the remaining hours, at a load greater than or equal to 5600 kW and less than or equal to 6100 kW, and

      2. 2. Verify that the auto-connected loads to each diesel generator do not exceed the short time rating of 6700 kW.

Diesel generator loading may be in accordance with manufacturers recommendations, including a warmup period. Momentary transients outside the load range, due to changing bus conditions, do not invalidate the test.

4.8.1.1.2 (Continued)

8) Within 5 minutes of shutting down the diesel generator, after the diesel generator has operated for an interval of not less than 2 hours at a load greater than or equal to 5600 kW and less than or equal to 6100 kW,+ by verifying the diesel starts and achieves:

   a) A generator voltage and frequency greater than or equal to 3740 volts and 58.8 Hz within 10 seconds after the start signal, and

   b) A steady-state generator voltage and frequency of 4160 ± 420 volts and 60 ± 1.2 Hz.

9) Verifying the diesel generator's capability to:

   a) Synchronize with the offsite power source while the generator is loaded with its emergency loads upon a simulated restoration of offsite power,

   b) Transfer its loads to the offsite power source, and

   c) Be restored to its standby status.

10) Verifying that with the diesel generator operating in a test mode, connected to its bus, a simulated Safety Injection signal overrides the test mode by: (1) returning the diesel generator to standby operation, and (2) automatically energizing the emergency loads with offsite power;

11) Verifying that the fuel transfer pump transfers fuel from each fuel storage tank to the day tank of each diesel via the installed cross-connection lines;

12) Verifying that the emergency power sequence timer is OPERABLE with the interval between each load block within ± 10% of its design interval;

13) NOT USED

+ Momentary transients outside the load range, due to changing bus conditions, do not invalidate the test.

4.8.1.1.2 (Continued)

14) Simulating a Tower Actuation (TA) signal while the diesel generator is loaded with the permanently connected loads and auto-connected emergency (accident) loads, and verifying that the service water pump automatically trips, and that the cooling tower pump automatically starts. After energization the steady state voltage and frequency of the emergency buses shall be maintained at 4160 ± 420 volts and 60 ± 1.2 Hz; and

15) While diesel generator 1A is loaded with the permanently connected loads and auto-connected emergency (accident) loads, manually connect the 1500 hp startup feedwater pump to 4160-volt bus E5. After energization the steady-state voltage and frequency of the emergency bus shall be maintained at 4160 ± 420 volts and 60 ± 1.2 Hz.

g. At least once per 10 years or after any modifications which could affect diesel generator interdependence by starting both diesel generators simultaneously from standby condition, during shutdown, and verifying that both diesel generators achieve:

1) A generator voltage and frequency greater than or equal to 3740 volts and 58.8 Hz within 10 seconds after the start signal, and

2) A steady-state generator voltage and frequency of 4160 ± 420 volts and 60 ± 1.2 Hz.

SURVEILLANCE REQUIREMENTS

4.8.1.1.2 (Continued)

h. (THIS SPECIFICATION NUMBER IS NOT USED)

4.8.1.1.3 (THIS SPECIFICATION NUMBER IS NOT USED)

TABLE 4.8-1

(THIS TABLE NUMBER IS NOT USED)

A.C. SOURCES

SHUTDOWN

LIMITING CONDITION FOR OPERATION

3.8.1.2 As a minimum, the following A.C. electrical power sources shall be OPERABLE:

a. One circuit between the offsite transmission network and the Onsite Class 1E Distribution System, and

b. One diesel generator with:

1) A day fuel tank containing a minimum fuel volume fraction of 3/8 (600 gallons of fuel),

2) A fuel storage system containing a minimum volume of 60,000 gallons of fuel,

3) A fuel transfer pump, lubricating oil, and

4) Lubricating oil storage containing a minimum total volume of 275 gallons of lubricating oil, and

5) Capability to transfer lubricating oil from storage to the diesel generator unit.

APPLICABILITY: MODES 5 and 6.

ACTION:

With less than the above minimum required A.C. electrical power sources OPERABLE, immediately suspend all operations involving CORE ALTERATIONS, positive reactivity changes, movement of irradiated fuel, or crane operation with loads over the fuel storage pool, and within 8 hours, depressurize and vent the Reactor Coolant System through a greater than or equal to 1.58-square-inch vent. In addition, when in MODE 5 with the reactor coolant loops not filled, or in MODE 6 with the water level less than 23 feet above the reactor vessel flange, immediately initiate corrective action to restore the required sources to OPERABLE status as soon as possible.

SURVEILLANCE REQUIREMENTS

4.8.1.2 The above required A.C. electrical power sources shall be demonstrated OPERABLE by the performance of each of the requirements of Specifications 4.8.1.1.1a, 4.8.1.1.2a [except for Specification 4.8.1.1.2a.6] and 4.8.1.1.2 b, c, d, e.

3/4.8.2 D.C. SOURCES

OPERATING

LIMITING CONDITION FOR OPERATION

3.8.2.1 As a minimum, the following D.C. electrical sources shall be OPERABLE and energized:

a. Train A

1) 125-volt Battery Banks 1A and 1C,
2) One full-capacity battery charger on Bus #11A, and
3) One full-capacity battery charger on Bus #11C.

b. Train B

1) 125-volt Battery Banks 1B and 1D,
2) One full-capacity battery charger on Bus #11B, and
3) One full-capacity battery charger on Bus #11D.

APPLICABILITY: MODES 1, 2, 3, and 4.

ACTION:

a. With one of the required battery banks in one train inoperable, close the bus tie to connect the remaining operable battery bank to the D.C. bus supplied by the inoperable battery bank within 2 hours; restore the inoperable battery bank to OPERABLE status within 30 days* or be in at least HOT STANDBY within the next 6 hours and in COLD SHUTDOWN within the following 30 hours.

b. With one of the full-capacity chargers inoperable, restore the inoperable charger to OPERABLE status within 2 hours or be in at least HOT STANDBY within the next 6 hours and in COLD SHUTDOWN within the following 30 hours.

SURVEILLANCE REQUIREMENTS

4.8.2.1 Each 125-volt battery bank and charger shall be demonstrated OPERABLE:

a. At least once per 7 days by verifying that:

1) The parameters in Table 4.8-2 meet the Category A limits, and
2) The total battery terminal voltage is greater than or equal to 128 volts on float charge.

b. At least once per 92 days and within 7 days after a battery discharge with battery terminal voltage below 110 volts, or battery overcharge with battery terminal voltage above 150 volts, by verifying that:

*No more than one battery at a time may be taken out of service for more than 30 days.

4.8.2.1b (Continued)

1) The parameters in Table 4.8-2 meet the Category B limits,

2) There is no visible corrosion at either terminals or connectors, or the connection resistance of these items is less than 150 x 10^{-6} ohm,* and

3) The average electrolyte temperature of 16 connected cells (4 cells per row) is above 65°F.

c. At least once per 18 months by verifying that:

1) The cells, cell plates, and battery racks show no visual indication of physical damage or abnormal deterioration,

2) The cell-to-cell and terminal connections are clean, tight, and coated with anticorrosion material,

3) The resistance of each cell-to-cell and terminal connection is less than or equal to 150 x 10^{-6} ohm,* and

4) Each battery charger will supply at least 150 amperes at a minimum of 132 volts for at least 8 hours.

d. At least once per 18 months by verifying that the battery capacity is adequate to supply and maintain in OPERABLE status all of the actual or simulated emergency loads for the design duty cycle when the battery is subjected to a battery service test;

e. At least once per 60 months by verifying that the battery capacity is at least 80% of the manufacturer's rating when subjected to a performance discharge test. Once per 60-month interval this performance discharge test may be performed in lieu of the battery service test required by Specification 4.8.2.1d.; and

f. At least once per 18 months by giving performance discharge tests of battery capacity to any battery that shows signs of degradation or has reached 85% of the service life expected for the application. Degradation is indicated when the battery capacity drops more than 10% of rated capacity from its average on previous performance tests, or is below 90% of the manufacturer's rating.

* Obtained by subtracting the normal resistance of: (1) the cross room rack connector (210 x 10^{-6} ohm, typical) and (2) the bi-level rack connector (35 x 10^{-6} ohm, typical) from the measured cell-to-cell conection resistance.

TABLE 4.8-2

BATTERY SURVEILLANCE REQUIREMENTS

	CATEGORY A[1]	CATEGORY B[2]	
PARAMETER	LIMITS FOR EACH DESIGNATED PILOT CELL	LIMITS FOR EACH CONNECTED CELL	ALLOWABLE[3] VALUE FOR EACH CONNECTED CELL
Electrolyte Level	>Minimum level indication mark, and < ¼" above maximum level indication mark	>Minimum level indication mark, and < ¼" above maximum level indication mark	Above top of plates, and not overflowing
Float Voltage	≥ 2.13 volts	≥ 2.13 volts[6]	> 2.07 volts
Specific Gravity[4]	≥ 1.200[5]	≥ 1.195	Not more than 0.020 below the average of all connected cells
		Average of all connected cells > 1.205	Average of all connected cells ≥ 1.195[5]

TABLE NOTATIONS

(1) For any Category A parameter(s) outside the limit(s) shown, the battery may be considered OPERABLE provided that within 24 hours all the Category B measurements are taken and found to be within their allowable values, and provided all Category A and B parameter(s) are restored to within limits within the next 6 days.

(2) For any Category B parameter(s) outside the limit(s) shown, the battery may be considered OPERABLE provided that the Category B parameters are within their allowable values and provided the Category B parameter(s) are restored to within limits within 7 days.

(3) Any Category B parameter not within its allowable value indicates an inoperable battery.

(4) Corrected for electrolyte temperature and level.

(5) Or battery charging current is less than 2 amps when on float charge.

(6) Corrected for average electrolyte temperature.

LIMITING CONDITION FOR OPERATION

3.8.2.2 As a minimum, two 125-volt battery banks in one D.C. Train and the associated full-capacity chargers shall be OPERABLE.

APPLICABILITY: MODES 5 and 6.

ACTION:

a. With one of the required battery banks inoperable, immediately close the bus tie to the alternate OPERABLE battery.

b. With both required battery banks and/or full-capacity chargers inoperable, immediately suspend all operations involving CORE ALTERATIONS, positive reactivity changes, or movement of irradiated fuel; initiate corrective action to restore the required battery banks and full-capacity chargers to OPERABLE status as soon as possible, and within 8 hours, depressurize and vent the Reactor Coolant System through a 1.58-square-inch vent.

SURVEILLANCE REQUIREMENTS

4.8.2.2 The above-required 125-volt battery banks and full-capacity chargers shall be demonstrated OPERABLE in accordance with Specification 4.8.2.1.

3/4.8.3 ONSITE POWER DISTRIBUTION

OPERATING

LIMITING CONDITION FOR OPERATION

3.8.3.1 The following electrical busses shall be energized in the specified manner:

a. Train A, A.C. Emergency Busses consisting of:

1) 4160-volt Emergency Bus #E5,
2) 480-volt Emergency Bus #E51,** and
3) 480-volt Emergency Bus #E52.**

b. Train B, A.C. Emergency Busses Consisting of:

1) 4160-volt Emergency Bus #E6,
2) 480-volt Emergency Bus #E61,**
3) 480-volt Emergency Bus #E62,** and
4) 480-volt Emergency Bus #E64.

c. 120-volt A.C. Vital Panel #1A energized from its associated inverter connected to D.C. Bus #11A,*

d. 120-volt A.C. Vital Panel #1B energized from its associated inverter connected to D.C. Bus #11B,*

e. 120-volt A.C. Vital Panel #1C energized from its associated inverter connected to D.C. Bus #11C,*

f. 120-volt A.C. Vital Panel #1D energized from its associated inverter connected to D.C. Bus #11D,*

g. 120-volt A.C. Vital Panel #1E energized from its associated inverter connected to D.C. Bus #11A,*

h. 120-volt A.C. Vital Panel #1F energized from its associated inverter connected to D.C. Bus #11B,*

---

* Two inverters may be disconnected from their D.C. bus for up to 24 hours as necessary, for the purpose of performing an equalizing charge on their associated battery bank provided: (1) their vital busses are energized, and (2) the vital busses associated with the other battery bank are energized from their associated inverters and connected to their associated D.C. bus.

** These busses can be considered OPERABLE if the 480 volt bus ties are closed. These bus ties will be under administrative control to ensure loading is within transformer rating.

LIMITING CONDITION FOR OPERATION

3.8.3.1 (Continued)

i. Train A, 125-volt D.C. Busses consisting of:

1) 125-volt D.C. Bus #11A energized from Battery Bank 1A* or 1C*, and
2) 125-volt D.C. Bus #11C energized from Battery Bank 1C* or 1A*.

j. Train B, 125-volt D.C. Busses consisting of:

1) 125-volt D.C. Bus #11B energized from Battery Bank 1B* or 1D*, and
2) 125-volt D.C. Bus #11D energized from Battery Bank 1D* or 1B*.

APPLICABILITY: MODES 1, 2, 3, and 4.

ACTION:

a. With one of the required trains of A.C. emergency busses (except 480-volt Emergency Bus # E64) not fully energized, reenergize the train within 8 hours or be in at least HOT STANDBY within the next 6 hours and in COLD SHUTDOWN within the following 30 hours.

1. With 480-volt Emergency bus #E64 not fully engergized, reenergize the bus within 7 days or be in HOT STANDBY within 6 hours and COLD SHUTDOWN within the following 30 hours.

b. With one A.C. vital panel either not energized from its associated inverter, or with the inverter not connected to its associated D.C. bus: (1) reenergize the A.C. vital panel within 2 hours or be in at least HOT STANDBY within the next 6 hours and in COLD SHUTDOWN within the following 30 hours; and (2) reenergize the A.C. vital panel from its associated inverter connected to its associated D.C. bus within 24 hours or be in at least HOT STANDBY within the next 6 hours and in COLD SHUTDOWN within the following 30 hours.

c. With one D.C. bus not energized from its associated battery bank, reenergize the D.C. bus from its associated battery bank or close the bus tie to the alternate OPERABLE battery of the same train within 2 hours* or be in at least HOT STANDBY within the next 6 hours and in COLD SHUTDOWN within the following 30 hours.

LIMITING CONDITION FOR OPERATION

SURVEILLANCE REQUIREMENTS

4.8.3.1 The specified busses and panels shall be determined energized in the required manner at least once per 7 days by verifying correct breaker alignment and indicated voltage on the busses.

*No more than one Battery Bank (1A, 1B, 1C, or 1D) at a time may be taken out of service for more than 30 days.

LIMITING CONDITION FOR OPERATION

3.8.3.2 As a minimum, the following electrical busses shall be energized in the specified manner:

a. One train of A.C. emergency busses consisting of the 4160-volt and the 480-volt A.C. emergency busses listed in 3.8.3.1a. and b. (excluding 480-volt Emergency Bus #E64);

b. Two of the four 120-volt A.C. vital Panels 1A, 1B, 1C, and 1D energized from their associated inverters connected to their respective D.C. busses;

c. One of the two 120-volt A.C. Vital Panels 1E or 1F energized from its associated inverter connected to the respective D.C. bus; and

d. Two 125-volt D.C. busses (in the same train) energized from their associated battery banks.

APPLICABILITY: MODES 5 and 6.

ACTION:

With any of the above required electrical busses and panels not energized in the required manner, immediately suspend all operations involving CORE ALTERATIONS, positive reactivity changes, or movement of irradiated fuel, initiate corrective action to energize the required electrical busses and panels in the specified manner as soon as possible, and within 8 hours, depressurize and vent the RCS through at least a 1.58-square-inch vent.

SURVEILLANCE REQUIREMENTS

4.8.3.2 The specified busses and panels shall be determined energized in the required manner at least once per 7 days by verifying correct breaker alignment and indicated voltage on the busses.

TRIP CIRCUIT FOR INVERTER I-2A

LIMITING CONDITION FOR OPERATION

3.8.3.3 The safety-related trip circuit that trips the D.C. feed from D.C. Bus #11C to inverter #I-2A after 15 minutes of discharge from the battery shall be OPERABLE. Note that this LIMITING CONDITION FOR OPERATION is applicable only when D.C. Bus #11C is required to be OPERABLE.

APPLICABILITY: MODES 1, 2, 3, 4, 5, and 6.

ACTION:

With this safety-related trip circuit inoperable, restore the trip circuit to OPERABLE status within 7 days or de-energize the D.C. feed to inverter #I-2A by tripping the D.C. circuit breaker in D.C. Bus #11C. Verify that this breaker is open once per 7 days thereafter.

SURVEILLANCE REQUIREMENTS

4.8.3.3 The safety-related trip circuit shall be demonstrated operable at least once per 18 months.

3/4.8.4 ELECTRICAL EQUIPMENT PROTECTIVE DEVICES

A.C. CIRCUITS INSIDE PRIMARY CONTAINMENT

LIMITING CONDITION FOR OPERATION

3.8.4.1 The circuit breakers feeding the following loads inside primary containment shall be padlocked in the open position:

Loads	Circuit	Panel
Refueling Canal Skimmer Pump	1-SF-P-272	1-ED-MCC-111
Polar Gantry Crane	1-MM-CR-3	1-ED-US-11
Distribution Panel	1-ED-PP-7A	1-ED-US-11
Distribution Panel	1-ED-PP-7B	1-ED-US-23
Rod Control Cluster Change Fixture	1-FH-RE 12	1-ED-MCC-111

APPLICABILITY: MODES 1, 2, and 3.

ACTION:

With any of the above required circuits energized, trip the associated circuit breaker(s) in the specified panel(s) within 1 hour.

EXCEPTION:

If any of the above-mentioned loads are required for brief durations (not to exceed 72 hours) during plant operation, the pertinent circuit breaker can be unlocked and closed for the required duration provided this change in breaker position becomes part of the applicable operating procedure used for the work inside containment.

SURVEILLANCE REQUIREMENTS

4.8.4.1 Verify at least once per 31 days that the circuit breakers listed above are locked in the open position.

ELECTRICAL EQUIPMENT PROTECTIVE DEVICES

CONTAINMENT PENETRATION CONDUCTOR OVERCURRENT PROTECTIVE DEVICES AND PROTECTIVE DEVICES FOR CLASS 1E POWER SOURCES CONNECTED TO NON-CLASS 1E CIRCUITS

LIMITING CONDITION FOR OPERATION

3.8.4.2 Each containment penetration conductor overcurrent protective device and each protective device for Class 1E power sources connected to non-Class 1E circuits shall be OPERABLE.

APPLICABILITY: MODES 1, 2, 3, 4, 5,* and 6.*

ACTION:

a. With one or more of the containment penetration conductor overcurrent protective device(s) inoperable:

   1) Restore the protective device(s) to OPERABLE status or deenergize the circuit(s) by tripping the associated circuit breaker or racking out or removing the inoperable protective device within 72 hours, declare the affected system or component inoperable, and verify the circuit breaker to be tripped or the inoperable protective device to be racked out or removed at least once per 7 days thereafter; or

   2) Be in at least HOT STANDBY within the next 6 hours and in COLD SHUTDOWN within the following 30 hours.

b. With one or more of the Class 1E power source protective device(s) inoperable, restore the protective device(s) to OPERABLE status or deenergize the circuit(s) by tripping the circuit breaker or racking out or removing the inoperable protective device within 72 hours, declare the affected component inoperable, and verify the circuit breaker to be tripped or the inoperable protective device to be racked out or removed at least once per 7 days thereafter.

SURVEILLANCE REQUIREMENTS

4.8.4.2 Each containment penetration conductor overcurrent and Class 1E power source protective device shall be demonstrated OPERABLE:

a. At least once per 18 months:

   1) By verifying that the medium voltage 13.8-kV and 4.16-kV circuit breakers are OPERABLE by selecting, on a rotating basis, at least one of the circuit breakers, and performing the following:

* Only for protective devices for Class 1E power sources connected to non-Class 1E loads.

4.8.4.2.a.1) (Continued)

a) A CHANNEL CALIBRATION of the associated protective relays (because of the large currents involved, it is impractical to inject primary side signals to current transformers; therefore, the channel calibration will be performed by injecting a signal on the secondary side of those transformers at their test plug),

b) An integrated system functional test which includes simulated automatic actuation of the system and verifying that each relay and associated circuit breakers and control circuits function as designed, and

c) For each circuit breaker found inoperable during these functional tests, one additional circuit breaker of the inoperable type shall also be functionally tested until no more failures are found or all circuit breakers of that type have been functionally tested.

2) By selecting and functionally testing a representative sample of at least 10% of each type of lower voltage circuit breakers and overload devices. Circuit breakers and overload devices selected for functional testing shall be selected on a rotating basis.

Testing of air circuit breakers shall consist of injecting a current with a value equal to 300% of the pickup of the long-time delay trip element and 150% of the pickup of the short-time delay trip element. The instantaneous element shall be tested by injecting a current equal to ±20% of the pickup value of the element.

Testing of thermal magnetic molded-case circuit breakers shall consist of injecting a current with a value equal to 300% of the circuit breaker trip rating and -25% to +40% of the circuit breaker instantaneous trip range or setpoint.

Testing of combination starters (a magnetic only molded-case circuit breaker in series with a motor starter and integral overload device) shall consist of injecting a current with a value equal to -25% to +40% of the circuit breaker instantaneous trip setpoint, and 200% and 300% of the thermal overload device trip rating to the respective devices.

Circuit breakers and/or overload devices found inoperable during functional testing shall be restored to OPERABLE status prior to resuming operation. For each circuit breaker and or overload devices found inoperable during these functional tests, an additional representative sample of at least 10% of all the circuit breakers and or overload devices of the inoperable type shall also be functionally tested until no more failures are found or all circuit breakers and or overload devices of that type have been functionally tested.

SURVEILLANCE REQUIREMENTS

4.8.4.2.a (Continued)

3) Corrective actions for any generic degradation of overcurrent protective devices, such as setpoint drift, manufacturing deficiencies, material defects, etc., shall be applicable to all (Class 1E and non-Class 1E) protective devices of identical design.

b. At least once per 60 months by subjecting each circuit breaker to an inspection and preventive maintenance in accordance with procedures prepared in conjunction with its manufacturer's recommendations.

ELECTRICAL EQUIPMENT PROTECTIVE DEVICES

MOTOR-OPERATED VALVES THERMAL OVERLOAD PROTECTION

LIMITING CONDITION FOR OPERATION

3.8.4.3 Each thermal overload protection for safety-related motor-operated valves shall be OPERABLE.

APPLICABILITY: Whenever the motor-operated valve is required to be OPERABLE.

ACTION:

With the thermal overload protection for one or more of the above-required valves inoperable, bypass the inoperable thermal overload within 8 hours, restore the inoperable thermal overload to OPERABLE status within 30 days, or declare the affected valve(s) inoperable and apply the appropriate ACTION Statement(s) for the affected system(s).

SURVEILLANCE REQUIREMENTS

4.8.4.3 The thermal overload protection for the above required valves shall be demonstrated OPERABLE at least once per 18 months and following maintenance on the motor starter by selection of a representative sample of at least 25% of all thermal overloads for the above-required valves and replacing them with precalibrated devices that have been subjected to a CHANNEL CALIBRATION.

3/4.9 REFUELING OPERATIONS

3/4.9.1 BORON CONCENTRATION

LIMITING CONDITION FOR OPERATION

3.9.1 The boron concentration of all filled portions of the Reactor Coolant System and the refueling canal shall be maintained uniform and sufficient to ensure a boron concentration of greater than or equal to the limit specified in the COLR.

APPLICABILITY: MODE 6.*

ACTION:

With the requirements of the above specification not satisfied, immediately suspend all operations involving CORE ALTERATIONS or positive reactivity changes and initiate and continue boration equivalent to 30 gpm at a boron concentration greater than or equal to the limit specified in the COLR for the Boric Acid Storage System until the boron concentration is restored to greater than or equal to the limit specified in the COLR.

SURVEILLANCE REQUIREMENTS

4.9.1.1 Verify boron concentration is within the limits specified in the COLR prior to:

a. Removing or unbolting the reactor vessel head, and

b. Withdrawal of any full-length control rod in excess of 3 feet from its fully inserted position within the reactor vessel.

4.9.1.2 The boron concentration of the Reactor Coolant System and the refueling canal shall be determined by chemical analysis at least once per 72 hours.

*The reactor shall be maintained in MODE 6 whenever fuel is in the reactor vessel with the vessel head closure bolts less than fully tensioned or with the head removed.

3/4.9.2 INSTRUMENTATION

LIMITING CONDITION FOR OPERATION

3.9.2 As a minimum, two Source Range Neutron Flux Monitors shall be OPERABLE, each with continuous visual indication in the control room and one with audible indication in the containment and control room.

APPLICABILITY: MODE 6.

ACTION:

a. With one of the above required monitors inoperable or not operating, immediately suspend all operations involving CORE ALTERATIONS or positive reactivity changes.

b. With both of the above required monitors inoperable or not operating, immediately initiate corrective action to restore one source range neutron flux monitor to OPERABLE status and determine the boron concentration of the Reactor Coolant System at least once per 12 hours.

SURVEILLANCE REQUIREMENTS

4.9.2 Each Source Range Neutron Flux Monitor shall be demonstrated OPERABLE by performance of:

a. A CHANNEL CHECK at least once per 12 hours,

b. A CHANNEL CALIBRATION* at least once per 18 months.

*Neutron detectors may be excluded from CHANNEL CALIBRATION.

3/4.9.3 DECAY TIME

LIMITING CONDITION FOR OPERATION

3.9.3 The reactor shall be subcritical for at least 80 hours.

APPLICABILITY: During movement of irradiated fuel in the reactor vessel.

ACTION:

With the reactor subcritical for less than 80 hours, suspend all operations involving movement of irradiated fuel in the reactor vessel.

SURVEILLANCE REQUIREMENTS

4.9.3 The reactor shall be determined to have been subcritical for at least 80 hours by verification of the date and time of subcriticality prior to movement of irradiated fuel in the reactor vessel.

3/4.9.4 CONTAINMENT BUILDING PENETRATIONS

LIMITING CONDITION FOR OPERATION

3.9.4 The containment building penetrations shall be in the following status:

a. The equipment door closed and held in place by a minimum of four bolts,

b. A minimum of one door in each airlock is closed, however both doors of one personnel airlock may be open if:

1) One personnel airlock door is capable of being closed, and

2) A designated individual is available outside the personnel airlock to close the door.

c. Each penetration providing direct access from the containment atmosphere to the outside atmosphere shall be either:

1) Closed by a manual or automatic isolation valve, blind flange, or equivalent; or

2) Be capable of being closed by an OPERABLE automatic Containment Purge and Exhaust Isolation System; or

3) Be capable of being closed by a designated individual available at the penetration.*

APPLICABILITY: During movement of recently irradiated fuel within the containment.

ACTION:

With the requirements of the above specification not satisfied, immediately suspend all operations involving movement of recently irradiated fuel in the containment building.

* A designated individual shall not be used for manual isolation of valves CAP-V1, CAP-V2, CAP-V3, and/or CAP-V4.

3/4.9.4 CONTAINMENT BUILDING PENETRATIONS

SURVEILLANCE REQUIREMENTS

4.9.4 For the above required containment building penetrations:

a. Determine that each of the above required containment building penetrations shall be in its required condition within 100 hours prior to the start of, and at least once per 7 days during movement of recently irradiated fuel in the containment building, and

b. Demonstrate that the Containment Purge and Exhaust Isolation System is OPERABLE at least once every 18 months and within 10 days prior to the start of movement of recently irradiated fuel in the containment building by verifying that containment purge and exhaust isolation occurs on manual initiation and on a High Radiation test signal from each of the manipulator crane radiation area monitoring instrumentation channels. **

** Not required for those valves complying with Specification 3.9.4.c.1 or Specification 3.9.4.c.3.

3/4.9.5 (This specification number is not used.)

3/4.9.6 (This specification number is not used.)

3/4.9.7 (This specification number is not used.)

3/4.9.8 RESIDUAL HEAT REMOVAL AND COOLANT CIRCULATION

HIGH WATER LEVEL

LIMITING CONDITION FOR OPERATION

3.9.8.1 At least one residual heat removal (RHR) loop shall be OPERABLE and in operation.*

APPLICABILITY: MODE 6, when the water level above the top of the reactor vessel flange is greater than or equal to 23 feet.

ACTION:

With no RHR loop OPERABLE and in operation, suspend all operations involving an increase in the reactor decay heat load or a reduction in boron concentration of the Reactor Coolant System and immediately initiate corrective action to return the required RHR loop to OPERABLE and operating status as soon as possible. Close all containment penetrations providing direct access from the containment atmosphere to the outside atmosphere within 4 hours.

SURVEILLANCE REQUIREMENTS

4.9.8.1 At least one RHR loop shall be verified in operation and circulating reactor coolant at a flow rate of greater than or equal to 2750 gpm at least once per 12 hours.

* The RHR loop may be removed from operation for up to 1 hour per 8-hour period during the performance of CORE ALTERATIONS in the vicinity of the reactor vessel hot legs.

REFUELING OPERATIONS

RESIDUAL HEAT REMOVAL AND COOLANT CIRCULATION

LOW WATER LEVEL

LIMITING CONDITION FOR OPERATION

3.9.8.2 Two independent residual heat removal (RHR) loops shall be OPERABLE, and at least one RHR loop shall be in operation.*

APPLICABILITY: MODE 6, when the water level above the top of the reactor vessel flange is less than 23 feet.

ACTION:

a. With less than the required RHR loops OPERABLE, immediately initiate corrective action to return the required RHR loops to OPERABLE status, or to establish greater than or equal to 23 feet of water above the reactor vessel flange, as soon as possible.

b. With no RHR loop in operation, suspend all operations involving a reduction in boron concentration of the Reactor Coolant System and immediately initiate corrective action to return the required RHR loop to operation. Close all containment penetrations providing direct access from the containment atmosphere to the outside atmosphere within 4 hours.

SURVEILLANCE REQUIREMENTS

4.9.8.2 At least one RHR loop shall be verified in operation and circulating reactor coolant at a flow rate of greater than or equal to 2750 gpm at least once per 12 hours.

* Prior to initial criticality, the RHR loop may be removed from operation for up to 1 hour per 8-hour period during the performance of CORE ALTERATIONS in the vicinity of the reactor vessel hot legs.

3/4.9.9 (This specification number is not used.)

3/4.9.10 WATER LEVEL - REACTOR VESSEL

LIMITING CONDITION FOR OPERATION

3.9.10 At least 23 feet of water shall be maintained over the top of the reactor vessel flange.

APPLICABILITY: During movement of fuel assemblies or control rods within the containment when either the fuel assemblies being moved or the fuel assemblies seated within the reactor vessel are irradiated while in MODE 6.

ACTION:

With the requirements of the above specification not satisfied, suspend all operations involving movement of fuel assemblies or control rods within the reactor vessel.

SURVEILLANCE REQUIREMENTS

4.9.10 The water level shall be determined to be at least its minimum required depth within 2 hours prior to the start of and at least once per 24 hours thereafter during movement of fuel assemblies or control rods.

3/4.9.11 WATER LEVEL - STORAGE POOL

LIMITING CONDITION FOR OPERATION

3.9.11 At least 23 feet of water shall be maintained over the top of irradiated fuel assemblies seated in the storage racks.

APPLICABILITY: Whenever irradiated fuel assemblies are in the storage pool.

ACTION:

a. With the requirements of the above specification not satisfied, suspend all movement of fuel assemblies and crane operations with loads in the fuel storage areas and restore the water level to within its limit within 4 hours.

b. The provisions of Specification 3.0.3 are not applicable.

SURVEILLANCE REQUIREMENTS

4.9.11 The water level in the storage pool shall be determined to be at least its minimum required depth at least once per 7 days when irradiated fuel assemblies are in the fuel storage pool.

3/4.9.12 FUEL STORAGE BUILDING EMERGENCY AIR CLEANING SYSTEM

LIMITING CONDITION FOR OPERATION

3.9.12 Two independent trains of the Fuel Storage Building Emergency Air Cleaning System shall be OPERABLE whenever irradiated fuel is in the storage pool and shall be OPERABLE with one train operating during fuel movement.

APPLICABILITY: Whenever irradiated fuel is in the storage pool.

ACTION:

a. With one train of the Fuel Storage Building Emergency Air Cleaning System inoperable, fuel movement within the storage pool or crane operation with loads over the storage pool may proceed provided the OPERABLE train of the Fuel Storage Building Emergency Air System is capable of being powered from an OPERABLE emergency power source and is in operation and discharging through at least one train of HEPA filters and charcoal adsorbers.

b. With no trains of the Fuel Storage Building Emergency Air Cleaning System OPERABLE, suspend all operations involving movement of fuel within the storage pool or crane operation with loads over the storage pool until at least one train of the Fuel Storage Building Emergency Air Cleaning System is restored to OPERABLE status and is in operation.

c. The provisions of Specification 3.0.3 are not applicable.

SURVEILLANCE REQUIREMENTS

4.9.12 The above required trains of the Fuel Storage Building Emergency Air Cleaning System shall be demonstrated OPERABLE:

a. At least once per 31 days on a STAGGERED TEST BASIS by initiating, from the control room, flow through the HEPA filters and charcoal adsorbers and verifying that the system operates for at least 10 continuous hours with the heaters operating;

b. At least once per 18 months or (1) after any structural maintenance on the HEPA filter or charcoal adsorber housings, or (2) following painting, fire, or chemical release in any ventilation zone communicating with the system by:

4.9.12b (Continued)

1) Verifying that the cleanup system satisfies the in-place penetration and bypass leakage testing acceptance criteria of less than 0.05% and uses the test procedure guidance in Regulatory Positions C.5.a, C.5.c, and C.5.d of Regulatory Guide 1.52, Revision 2, March 1978,* and the system flow rate is 16,450 cfm ± 10%;

2) Verifying, within 31 days after removal, that a laboratory analysis of a representative carbon sample obtained in accordance with Regulatory Position C.6.b of Regulatory Guide 1.52, Revision 2, March 1978, by showing a methyl iodide penetration of less than or equal to 2.5% when tested at a temperature of 30°C, at a relative humidity of 70% and a face velocity of 44 fpm in accordance with ASTM-D-3803-1989; and

3) Verifying a system flow rate of 16,450 cfm ± 10% during system operation when tested in accordance with ANSI N510-1980.

c. After every 720 hours of charcoal adsorber operation by verifying, within 31 days after removal, that a laboratory analysis of a representative carbon sample obtained in accordance with Regulatory Position C.6.b of Regulatory Guide 1.52, Revision 2, March 1978, by showing a methyl iodide penetration of less than or equal to 2.5% when tested at a temperature of 30°C, at a relative humidity of 70% and a face velocity of 44 fpm in accordance with ASTM-D-3803-1989.

d. At least once per 18 months by:

1) Verifying that the pressure drop across the combined HEPA filters and charcoal adsorber banks is less than 6 inches Water Gauge while operating the system at a flow rate of 16,450 cfm ± 10%,

2) Verifying that the system maintains the spent fuel storage pool area at a negative-pressure of greater than or equal to 1/4 inch Water Gauge relative to the outside atmosphere during system operation,

* ANSI N510-1980 shall be used in place of ANSI N510-1975 as referenced in Regulatory Guide 1.52, Rev. 2, March 1978.

SURVEILLANCE REQUIREMENTS

4.9.12d (Continued)

3) Verifying that the filter cross connect valve can be manually opened, and

4) Verifying that the heaters dissipate at least 84 kW (based on design rated voltage of 480V) when tested in accordance with ANSI N510-1980.

e. After each complete or partial replacement of a HEPA filter bank, by verifying that the cleanup system satisfies the in-place penetration leakage testing acceptance criteria of less than 0.05% in accordance with ANSI N510-1980 for a DOP test aerosol while operating the system at a flow rate of 16,450 cfm $\pm$ 10%.

f. After each complete or partial replacement of a charcoal adsorber bank, by verifying that the cleanup system satisfies the in-place penetration leakage testing acceptance criteria of less than 0.05% in accordance with ANSI N510-1980 for a halogenated hydrocarbon refrigerant test gas while operating the system at a flow rate of 16,450 cfm $\pm$ 10%.

3/4.9.13 SPENT FUEL ASSEMBLY STORAGE

LIMITING CONDITION FOR OPERATION

3.9.13 Fuel assemblies stored in the Spent Fuel Pool shall be placed in the spent fuel storage racks according to the criteria shown in Figure 3.9-1.

APPLICABILITY: Whenever fuel is in the Spent Fuel Pool.

ACTION:

a. With the requirements of the above specification not satisfied, suspend all other fuel movement within the Spent Fuel Pool and move the non-complying fuel assemblies to allowable locations in the Spent Fuel Pool in accordance with Figure 3.9-1.

b. The provisions of Specification 3.0.3 are not applicable.

SURVEILLANCE REQUIREMENTS

4.9.13.1 The burnup of each fuel assembly to be stored in the Spent Fuel Pool shall be determined from it's measured burnup history prior to storage in the Spent Fuel Pool. A complete record of each assembly shall be maintained as long as that fuel assembly is retained on-site.

4.9.13.2 After fuel assembly(ies) movement into or within the Spent Fuel Pool, the position of the fuel assembly(ies) that was (were) moved shall be checked and independently verified to be in accordance with the criteria in Figure 3.9-1

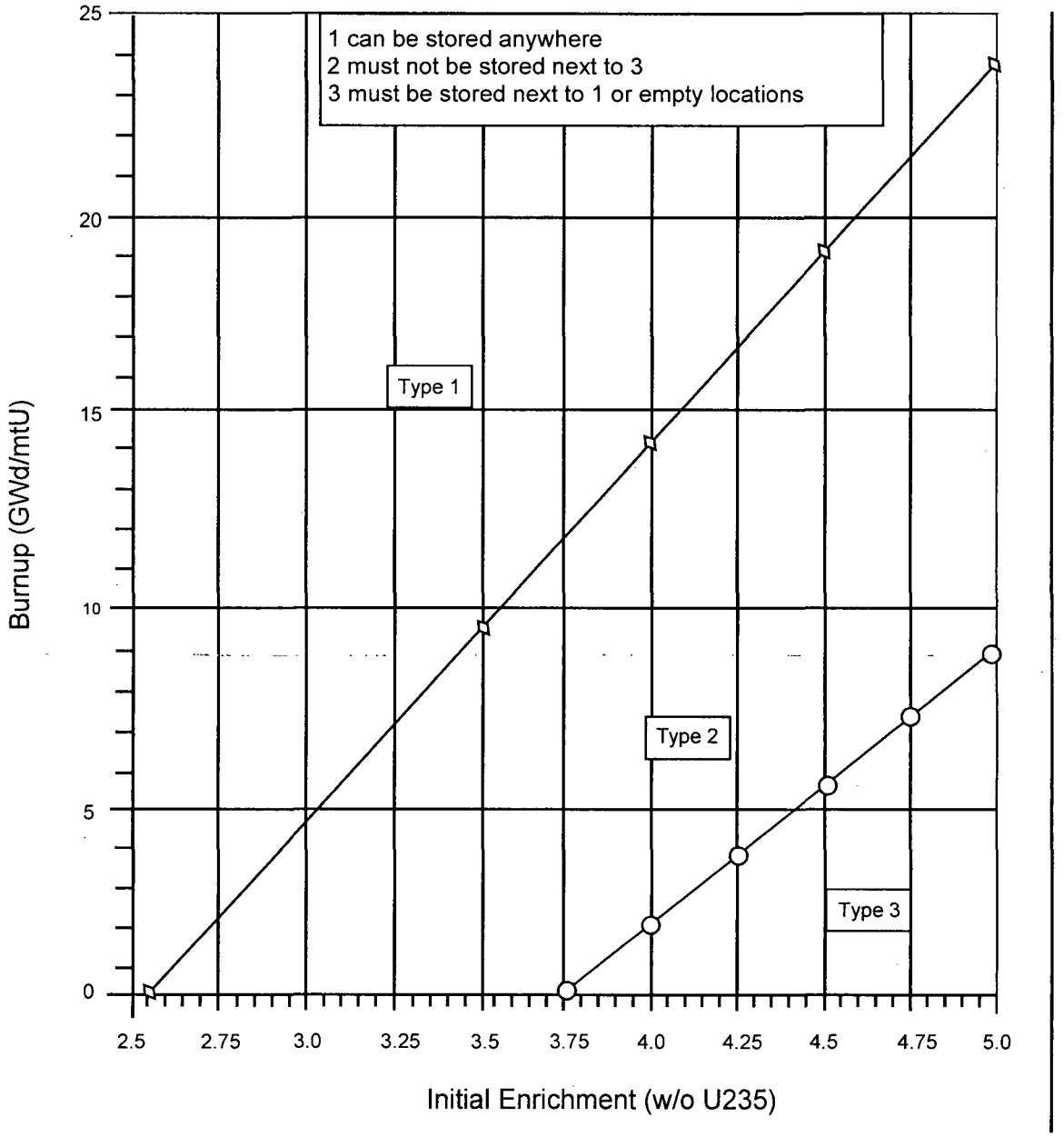

Figure 3.9-1
Fuel Assembly Burnup vs. Initial Enrichment
For Spent Fuel Assembly Storage

3/4.9.14 NEW FUEL ASSEMBLY STORAGE

LIMITING CONDITION FOR OPERATION

3.9.14 The New Fuel Storage Vault may be maintained with a full loading of 90 assemblies with fuel enrichment up to 3.675 w/o ^{235}U. The loading must be reduced to 81 assemblies for enrichments from 3.675 to 5.0 w/o ^{235}U by limiting the fuel assembly placement in the central column of the New Fuel Storage Vault to every other location.

APPLICABILITY: Whenever fuel is in the New Fuel Storage Vault.

ACTION:

a. With the requirements of the above specification not satisfied, suspend all other fuel movement within the New Fuel Storage Vault and move the non-complying fuel assemblies to allowable locations in the New Fuel Storage Vault in accordance with the requirements of the above specification.

b. The provisions of Specification 3.0.3 are not applicable.

SURVEILLANCE REQUIREMENTS

4.9.14.1 After fuel assembly(ies) movement into or within the New Fuel Storage Vault, the position of the new fuel assembly(ies) that was (were) moved shall be checked and independently verified to be in accordance with the requirements of the above specification.

3/4.10 SPECIAL TEST EXCEPTIONS

3/4.10.1 SHUTDOWN MARGIN

LIMITING CONDITION FOR OPERATION

3.10.1 The SHUTDOWN MARGIN requirement of Specification 3.1.1.1 may be suspended for measurement of control rod worth and SHUTDOWN MARGIN provided reactivity equivalent to at least the highest estimated control rod worth is available for trip insertion from OPERABLE control rod(s).

APPLICABILITY: MODE 2.

ACTION:

a. With any full-length control rod not fully inserted and with less than the above reactivity equivalent available for trip insertion, immediately initiate and continue boration at greater than or equal to 30 gpm of a solution containing greater than or equal to 7000 ppm boron or its equivalent until the SHUTDOWN MARGIN required by Specification 3.1.1.1 is restored.

b. With all full-length control rods fully inserted and the reactor subcritical by less than the above reactivity equivalent, immediately initiate and continue boration at greater than or equal to 30 gpm of a solution containing greater than or equal to 7000 ppm boron or its equivalent until the SHUTDOWN MARGIN required by Specification 3.1.1.1 is restored.

SURVEILLANCE REQUIREMENTS

4.10.1.1 The position of each full-length control rod either partially or fully withdrawn shall be determined at least once per 2 hours.

4.10.1.2 Each full-length control rod not fully inserted shall be demonstrated capable of full insertion when tripped from at least the 50% withdrawn position within 24 hours prior to reducing the SHUTDOWN MARGIN to less than the limits of Specification 3.1.1.1.

3/4.10.2 GROUP HEIGHT, INSERTION, AND POWER DISTRIBUTION LIMITS

LIMITING CONDITION FOR OPERATION

3.10.2 The group height, insertion, and power distribution limits of Specifications 3.1.3.1, 3.1.3.5, 3.1.3.6, 3.2.1, and 3.2.4 may be suspended during the performance of PHYSICS TESTS provided:

a. The THERMAL POWER is maintained less than or equal to 85% of RATED THERMAL POWER, and

b. The limits of Specifications 3.2.2 and 3.2.3 are maintained and determined at the frequencies specified in Specification 4.10.2.2 below.

APPLICABILITY: MODE 1.

ACTION:

With any of the limits of Specification 3.2.2 or 3.2.3 being exceeded while the requirements of Specifications 3.1.3.1, 3.1.3.5, 3.1.3.6, 3.2.1, and 3.2.4 are suspended, either:

a. Reduce THERMAL POWER sufficient to satisfy the ACTION requirements of Specifications 3.2.2 and 3.2.3, or

b. Be in HOT STANDBY within 6 hours.

SURVEILLANCE REQUIREMENTS

4.10.2.1 The THERMAL POWER shall be determined to be less than or equal to 85% of RATED THERMAL POWER at least once per hour during PHYSICS TESTS.

4.10.2.2 The requirements of Specifications 4.2.2.2, 4.2.2.3, and 4.2.3.2 shall be performed at least once per 12 hours during PHYSICS TESTS.

3/4.10.3 PHYSICS TESTS

LIMITING CONDITION FOR OPERATION

3.10.3 The limitations of Specifications 3.1.1.3, 3.1.1.4, 3.1.3.1, 3.1.3.5, and 3.1.3.6 may be suspended during the performance of PHYSICS TESTS provided:

a. The THERMAL POWER does not exceed 5% of RATED THERMAL POWER,

b. The Reactor Trip Setpoints on the OPERABLE Intermediate Range and Power Range* channels are set at less than or equal to 25% of RATED THERMAL POWER, and

c. The Reactor Coolant System lowest operating loop temperature (T_{avg}) is greater than or equal to 541°F.

APPLICABILITY: MODE 2.

ACTION:

a. With the THERMAL POWER greater than 5% of RATED THERMAL POWER, immediately open the Reactor trip breakers.

b. With a Reactor Coolant System operating loop temperature (T_{avg}) less than 541°F, restore T_{avg} to within its limit within 15 minutes or be in at least HOT STANDBY within the next 15 minutes.

SURVEILLANCE REQUIREMENTS

4.10.3.1 The THERMAL POWER shall be determined to be less than or equal to 5% of RATED THERMAL POWER at least once per hour during PHYSICS TESTS.

4.10.3.2 Verify each OPERABLE Intermediate Range and Power Range* channel has been subjected to an ANALOG CHANNEL OPERATIONAL TEST per Specification Table 4.3-1 prior to initiating PHYSICS TESTS.

4.10.3.3 The Reactor Coolant System temperature (T_{avg}) shall be determined to be greater than or equal to 541°F at least once per 30 minutes during PHYSICS TESTS.

*Power Range Low Setpoint only.

3/4.10.4 (THIS SPECIFICATION NUMBER IS NOT USED)

3/4.10.5 POSITION INDICATION SYSTEM - SHUTDOWN

LIMITING CONDITION FOR OPERATION

3.10.5 The limitations of Specification 3.1.3.3 may be suspended during the performance of individual full-length shutdown and control rod drop time measurements provided;

a. Only one shutdown or control bank is withdrawn from the fully inserted position at a time, and

b. The rod position indicator is OPERABLE during the withdrawal of the rods.*

APPLICABILITY: MODES 3, 4, and 5 during performance of rod drop time measurements.

ACTION:

With the Position Indication Systems inoperable or with more than one bank of rods withdrawn, immediately open the Reactor trip breakers.

SURVEILLANCE REQUIREMENTS

4.10.5 The above required Position Indication Systems shall be determined to be OPERABLE within 24 hours prior to the start of and at least once per 24 hours thereafter during rod drop time measurements by verifying the Demand Position Indication System and the Digital Rod Position Indication System agree within 12 steps when the rods are stationary.

*This requirement is not applicable during the initial calibration of the Digital Rod Position Indication System provided: (1) k_{eff} is maintained less than or equal to 0.95, and (2) only one shutdown or control rod bank is withdrawn from the fully inserted position at one time.

PAGE LEFT INTENTIONALLY BLANK

3/4.11 RADIOACTIVE EFFLUENTS

3/4.11.1 LIQUID EFFLUENTS

CONCENTRATION

LIMITING CONDITION FOR OPERATION

3.11.1.1 (THIS SPECIFICATION NUMBER IS NOT USED)

LIMITING CONDITION FOR OPERATION

3.11.1.2 (THIS SPECIFICATION NUMBER IS NOT USED)

LIMITING CONDITION FOR OPERATION

3.11.1.3 (THIS SPECIFICATION NUMBER IS NOT USED)

RADIOACTIVE EFFLUENTS

LIQUID EFFLUENTS

LIQUID HOLDUP TANKS*

LIMITING CONDITION FOR OPERATION

3.11.1.4 The quantity of radioactive material contained in each temporary unprotected outdoor tank shall be limited to less than or equal to 10 Curies, excluding tritium and dissolved or entrained noble gases.

APPLICABILITY: At all times.

ACTION:

a. With the quantity of radioactive material in any temporary unprotected outdoor tank exceeding the above limit, immediately suspend all additions of radioactive material to the tank, within 48 hours reduce the tank contents to within the limit, and describe the events leading to this condition in the next Annual Radioactive Effluent Release Report, pursuant to Specification 6.8.1.4.

b. The provisions of Specification 3.0.3 are not applicable.

SURVEILLANCE REQUIREMENTS

4.11.1.4 The quantity of radioactive material contained in each temporary unprotected outdoor tank shall be determined to be within the above limit by analyzing a representative sample of the tank's contents at least once per 7 days when radioactive materials are being added to the tank.

*Tanks included in this specification are those outdoor tanks that are not surrounded by liners, dikes, or walls capable of holding the tank contents and that do not have tank overflows and surrounding area drains connected to the Liquid Radwaste Treatment System.

3/4.11.2 GASEOUS EFFLUENTS

DOSE RATE

LIMITING CONDITION FOR OPERATION

3.11.2.1 (THIS SPECIFICATION IS NOT USED)

LIMITING CONDITION FOR OPERATION

3.11.2.2 (THIS SPECIFICATION NUMBER IS NOT USED)

DOSE – IODINE-131, IODINE-133, TRITIUM, AND RADIOACTIVE MATERIAL IN PARTICULATE FORM

LIMITING CONDITION FOR OPERATION

3.11.2.3 (THIS SPECIFICATION NUMBER IS NOT USED)

LIMITING CONDITION FOR OPERATION

3.11.2.4 (THIS SPECIFICATION NUMBER IS NOT USED)

EXPLOSIVE GAS MIXTURE - SYSTEM

LIMITING CONDITION FOR OPERATION

3.11.2.5 The concentration of oxygen in the GASEOUS RADWASTE TREATMENT SYSTEM shall be limited to less than or equal to 2% by volume.

APPLICABILITY: At all times.

ACTION:

a. With the concentration of oxygen in the GASEOUS RADWASTE TREATMENT SYSTEM greater than 2% by volume, reduce the oxygen concentration to the above limit within 48 hours unless the hydrogen concentration is verified to be less than 4% by volume.

b. The provisions of Specification 3.0.3 are not applicable.

SURVEILLANCE REQUIREMENTS

4.11.2.5 The concentration of hydrogen or oxygen in the GASEOUS RADWASTE TREATMENT SYSTEM shall be determined to be within the above limit by continuously monitoring the waste gases in the GASEOUS RADWASTE TREATMENT SYSTEM with the hydrogen or oxygen monitors required OPERABLE by Table 3.3-13 of Specification 3.3.3.10.

3/4.11.3 SOLID RADIOACTIVE WASTES

LIMITING CONDITION FOR OPERATION

3.11.3 (THIS SPECIFICATION NUMBER IS NOT USED)

SURVEILLANCE REQUIREMENTS

4.11.3 (Continued) (THIS SPECIFICATION NUMBER IS NOT USED)

3/4.11.4 TOTAL DOSE

LIMITING CONDITION FOR OPERATION

3.11.4 (THIS SPECIFICATION NUMBER IS NOT USED)

3/4.12 RADIOLOGICAL ENVIRONMENTAL MONITORING

3/4.12.1 MONITORING PROGRAM

LIMITING CONDITION FOR OPERATION

3.12.1 (THIS SPECIFICATION NUMBER IS NOT USED)

LIMITING CONDITION FOR OPERATION

3.12.1 (Continued) (THIS SPECIFICATION NUMBER IS NOT USED)

3/4.12.2 LAND USE CENSUS

LIMITING CONDITION FOR OPERATION

3.12.2 (THIS SPECIFICATION NUMBER IS NOT USED)

SURVEILLANCE REQUIREMENTS

4.12.2 (THIS SPECIFICATION NUMBER IS NOT USED)

3/4.12.3 INTERLABORATORY COMPARISON PROGRAM

LIMITING CONDITION FOR OPERATION

3.12.3 (THIS SPECIFICATION NUMBER IS NOT USED)

BASES FOR

SECTIONS 3.0 AND 4.0

LIMITING CONDITIONS FOR OPERATION

AND

SURVEILLANCE REQUIREMENTS

NOTE

The BASES contained in succeeding pages summarize the reasons for the Specifications in Sections 3.0 and 4.0, but in accordance with 10 CFR 50.36 are not part of these Technical Specifications.

INDEX

3.0/4.0 BASES

3/4.0 APPLICABILITY ..... B 3/4 0-1

3/4.1 REACTIVITY CONTROL SYSTEMS

3/4.1.1 BORATION CONTROL ..... B 3/4 1-1
3/4.1.2 BORATION SYSTEMS ..... B 3/4 1-3
3/4.1.3 MOVABLE CONTROL ASSEMBLIES ..... B 3/4 1-3

3/4.2 POWER DISTRIBUTION LIMITS ..... B 3/4 2-1

3/4.2.1 AXIAL FLUX DIFFERENCE ..... B 3/4 2-1
3/4.2.2 and 3/4.2.3 HEAT FLUX HOT CHANNEL FACTOR AND NUCLEAR ENTHALPY RISE HOT CHANNEL FACTOR ..... B 3/4 2-2
3/4.2.4 QUADRANT POWER TILT RATIO ..... B 3/4 2-3
3/4.2.5 DNB PARAMETERS ..... B 3/4 2-4

3/4.3 INSTRUMENTATION

3/4.3.1 and 3/4.3.2 REACTOR TRIP SYSTEM and ENGINEERED SAFETY FEATURES ACTUATION SYSTEM INSTRUMENTATION ..... B 3/4 3-1
3/4.3.3 MONITORING INSTRUMENTATION ..... B 3/4 3-3
3/4.3.4 (THIS SPECIFICATION NUMBER IS NOT USED) ..... B 3/4 3-6

3/4.4 REACTOR COOLANT SYSTEM

3/4.4.1 REACTOR COOLANT LOOPS AND COOLANT CIRCULATION ..... B 3/4 4-1
3/4.4.2 SAFETY VALVES ..... B 3/4 4-1a
3/4.4.3 PRESSURIZER ..... B 3/4 4-2
3/4.4.4 RELIEF VALVES ..... B 3/4 4-2
3/4.4.5 STEAM GENERATORS ..... B 3/4 4-2a
3/4.4.6 REACTOR COOLANT SYSTEM LEAKAGE ..... B 3/4 4-3
3/4.4.7 CHEMISTRY ..... B 3/4 4-5
3/4.4.8 SPECIFIC ACTIVITY ..... B 3/4 4-5
3/4.4.9 PRESSURE/TEMPERATURE LIMITS ..... B 3/4 4-7

FIGURE B 3/4.4-1 FAST NEUTRON FLUENCE (E>1MeV) AS A FUNCTION OF FULL POWER SERVICE LIFE ..... B 3/4 4-9

FIGURE B 3/4.4-2 (This figure number not used) ..... B 3/4 4-10

TABLE B 3/4.4-1 REACTOR VESSEL TOUGHNESS ..... B 3/4 4-11

3/4.4.10 STRUCTURAL INTEGRITY ..... B 3/4 4-17
3/4.4.11 REACTOR COOLANT SYSTEM VENTS ..... B 3/4 4-18

INDEX

3.0/4.0 BASES

SECTION PAGE

3/4.5 EMERGENCY CORE COOLING SYSTEMS

3/4.5.1 ACCUMULATORS ..... B 3/4 5-1
3/4.5.2 and 3/4.5.3 ECCS SUBSYSTEMS ..... B 3/4 5-1
3/4.5.4 REFUELING WATER STORAGE TANK ..... B 3/4 5-2

3/4.6 CONTAINMENT SYSTEMS

3/4.6.1 PRIMARY CONTAINMENT ..... B 3/4 6-1
3/4.6.2 DEPRESSURIZATION AND COOLING SYSTEMS ..... B 3/4 6-3
3/4.6.3 CONTAINMENT ISOLATION VALVES ..... B 3/4 6-3a
3/4.6.4 COMBUSTIBLE GAS CONTROL ..... B 3/4 6-4
3/4.6.5 CONTAINMENT ENCLOSURE BUILDING ..... B 3/4 6-5

3/4.7 PLANT SYSTEMS

3/4.7.1 TURBINE CYCLE ..... B 3/4 7-1
3/4.7.2 STEAM GENERATOR PRESSURE/TEMPERATURE LIMITATION ..... B 3/4 7-9
3/4.7.3 PRIMARY COMPONENT COOLING WATER SYSTEM ..... B 3/4 7-9
3/4.7.4 SERVICE WATER SYSTEM/ULTIMATE HEAT SINK ..... B 3/4 7-10
3/4.7.5 (THIS SPECIFICATION NUMBER IS NOT USED) ..... B 3/4 7-12
3/4.7.6 CONTROL ROOM SUBSYSTEMS ..... B 3/4 7-12
3/4.7.7 SNUBBERS ..... B 3/4 7-13
3/4.7.8 SEALED SOURCE CONTAMINATION ..... B 3/4 7-15
3/4.7.9 (THIS SPECIFICATION NUMBER IS NOT USED) ..... B 3/4 7-15
3/4.7.10 (THIS SPECIFICATION NUMBER IS NOT USED) ..... B 3/4 7-15

3/4.8 ELECTRICAL POWER SYSTEMS

3/4.8.1 AC SOURCES ..... B 3/4 8-1
3/4.8.2 and 3/4.8.3 D.C. SOURCES and ONSITE POWER DISTRIBUTION ..... B 3/4 8-18
3/4.8.4 ELECTRICAL EQUIPMENT PROTECTIVE DEVICES ..... B 3/4 8-20

3/4.9 REFUELING OPERATIONS

3/4.9.1 BORON CONCENTRATION ..... B 3/4 9-1
3/4.9.2 INSTRUMENTATION ..... B 3/4 9-2a
3/4.9.3 DECAY TIME ..... B 3/4 9-2c
3/4.9.4 CONTAINMENT BUILDING PENETRATIONS ..... B 3/4 9-2d
3/4.9.5 (THIS SPECIFICATION NUMBER IS NOT USED) ..... B 3/4 9-3
3/4.9.6 (THIS SPECIFICATION NUMBER IS NOT USED) ..... B 3/4 9-3
3/4.9.7 (THIS SPECIFICATION NUMBER IS NOT USED) ..... B 3/4 9-3

SECTION PAGE

3/4.9 REFUELING OPERATIONS (Continued)

3/4.9.8 RESIDUAL HEAT REMOVAL AND COOLANT CIRCULATION..... B 3/4 9-3
3/4.9.9 (THIS SPECIFICATION NUMBER IS NOT USED) ..... B 3/4 9-4
3/4.9.10 and 3/4.9.11 WATER LEVEL - REACTOR VESSEL and STORAGE POOL..... B 3/4 9-4
3/4.9.12 FUEL STORAGE BUILDING EMERGENCY AIR CLEANING SYSTEM. B 3/4 9-4
3/4.9.13 SPENT FUEL ASSEMBLY STORAGE..... B 3/4 9-4
3/4.9.14 NEW FUEL ASSEMBLY STORAGE..... B 3/4 9-4

3/4.10 SPECIAL TEST EXCEPTIONS

3/4.10.1 SHUTDOWN MARGIN..... B 3/4 10-1
3/4.10.2 GROUP HEIGHT, INSERTION, AND POWER DISTRIBUTION LIMITS B 3/4 10-1
3/4.10.3 PHYSICS TESTS..... B 3/4 10-1
3/4.10.4 REACTOR COOLANT LOOPS..... B 3/4 10-1
3/4.10.5 POSITION INDICATION SYSTEM – SHUTDOWN..... B 3/4 10-1

3/4.11 RADIOACTIVE EFFLUENTS

3/4.11.1 LIQUID EFFLUENTS..... B 3/4 11-1
3/4.11.2 GASEOUS EFFLUENTS..... B 3/4 11-2
3/4.11.3 (THIS SPECIFICATION NUMBER IS NOT USED)..... B 3/4 11-5
3/4.11.4 (THIS SPECIFICATION NUMBER IS NOT USED)..... B 3/4 11-5

3/4.12 RADIOLOGICAL ENVIRONMENTAL MONITORING

3/4.12.1 (THIS SPECIFICATION NUMBER IS NOT USED)..... B 3/4 12-1
3/4.12.2 (THIS SPECIFICATION NUMBER IS NOT USED)..... B 3/4 12-1
3/4.12.3 (THIS SPECIFICATION NUMBER IS NOT USED)..... B 3/4 12-2

3/4.0 APPLICABILITY

BASES

Specification 3.0.1 through 3.0.4 establish the general requirements applicable to Limiting Conditions for Operation. These requirements are based on the requirements for Limiting Conditions for Operation stated in the Code of Federal Regulations, 10 CFR 50.36(c)(2):

"Limiting conditions for operation are the lowest functional capability or performance levels of equipment required for safe operation of the facility. When a limiting condition for operation of a nuclear reactor is not met, the licensee shall shut down the reactor or follow any remedial action permitted by the technical specification until the condition can be met."

Specification 3.0.1 establishes the Applicability statement within each individual specification as the requirement for when (i.e., in which OPERATIONAL MODES or other specified conditions) conformance to the Limiting Conditions for Operation is required for safe operation of the facility. The ACTION requirements establish those remedial measures that must be taken within specified time limits when the requirements of a Limiting Condition for Operation are not met.

There are two basic types of ACTION requirements. The first specifies the remedial measures that permit continued operation of the facility which is not further restricted by the time limits of the ACTION requirements. In this case, conformance to the ACTION requirements provides an acceptable level of safety for unlimited continued operation as long as the ACTION requirements continue to be met. The second type of ACTION requirement specifies a time limit in which conformance to the conditions of the Limiting Condition for Operation must be met. This time limit is the allowable outage time to restore an inoperable system or component to OPERABLE status or for restoring parameters within specified limits. If these actions are not completed within the allowable outage time limits, a shutdown is required to place the facility in a MODE or condition in which the specification no longer applies. It is not intended that the shutdown ACTION requirements be used as an operational convenience which permits (routine) voluntary removal of a system(s) or component(s) from service in lieu of other alternatives that would not result in redundant systems or components being inoperable.

The specified time limits of the ACTION requirements are applicable from the point in time it is identified that a Limiting Condition for Operation is not met. The time limits of the ACTION requirements are also applicable when a system or component is removed from service for surveillance testing or investigation of operational problems. Individual specifications may include a specified time limit for the completion of a Surveillance Requirement when equipment is removed from service. In this case, the allowable outage time limits of the ACTION requirements are applicable when this limit expires if the surveillance has not been completed. When a shutdown is required to comply with ACTION requirements, the plant may have entered a MODE in which a new specification becomes applicable. In this case, the time limits of the ACTION requirements would apply from the point in time that the new specification becomes applicable if the requirements of the Limiting Condition for Operation are not met.

Specification 3.0.2 establishes that noncompliance with a specification exists when the requirements of the Limiting Condition for Operation are not met and the associated ACTION requirements have not been implemented within the specified time interval. The purpose of this specification is to clarify that (1) implementation of the ACTION requirements within the specified time interval constitutes compliance with a specification and (2) completion of the remedial measures of the ACTION requirements is not required when compliance with a Limiting Condition of Operation is restored within the time interval specified in the associated ACTION requirements.

Specification 3.0.3 establishes the shutdown ACTION requirements that must be implemented when a Limiting Condition for Operation is not met and the condition is not specifically addressed by the associated ACTION requirements. The purpose of this specification is to delineate the time limits for placing the unit in a safe shutdown MODE when plant operation cannot be maintained within the limits for safe operation defined by the Limiting Conditions for Operation and its ACTION requirements. It is not intended to be used as an operational convenience which permits (routine) voluntary removal of redundant systems or components from service in lieu of other alternatives that would not result in redundant systems or components being inoperable. One hour is allowed to prepare for an orderly shutdown before initiating a change in plant operation. This time permits the operator to coordinate the reduction in electrical generation with the load dispatcher to ensure the stability and availability of the electrical grid. The time limits specified to reach lower MODES of operation permit the shutdown to proceed in a controlled and orderly manner that is well within the specified maximum cooldown rate and within the cooldown capabilities of the facility assuming only the minimum required equipment is OPERABLE. This reduces thermal stresses on components of the primary coolant system and the potential for a plant upset that could challenge safety systems under conditions for which this specification applies.

If remedial measures permitting limited continued operation of the facility under the provisions of the ACTION requirements are completed, the shutdown may be terminated. The time limits of the ACTION requirements are applicable from the point in time there was a failure to meet a Limiting Condition for Operation. Therefore, the shutdown may be terminated if the ACTION requirements have been met or the time limits of the ACTION requirements have not expired, thus providing an allowance for the completion of the required actions.

The time limits of Specification 3.0.3 allow 37 hours for the plant to be in the COLD SHUTDOWN MODE when a shutdown is required during the POWER MODE of operation. If the plant is in a lower MODE of operation when a shutdown is required, the time limit for reaching the next lower MODE of operation applies. However, if a lower MODE of operation is reached in less time than allowed, the total allowable time to reach COLD SHUTDOWN, or other applicable MODE, is not reduced. For example, if HOT STANDBY is reached in 2 hours, the time allowed to reach HOT SHUTDOWN is the next 11 hours because the total time to reach HOT SHUTDOWN is not reduced from the allowable limit of 13 hours.

Therefore, if remedial measures are completed that would permit a return to POWER operation, a penalty is not incurred by having to reach a lower MODE of operation in less than the total time allowed.

The same principle applies with regard to the allowable outage time limits of the ACTION requirements, if compliance with the ACTION requirements for one specification results in entry into a MODE or condition of operation for another specification in which the requirements of the Limiting Condition for Operation are not met. If the new specification becomes applicable in less time than specified, the difference may be added to the allowable outage time limits of the second specification. However, the allowable outage time limits of ACTION requirements for a higher MODE of operation may not be used to extend the allowable outage time that is applicable when a Limiting Condition for Operation is not met in a lower MODE of operation.

The shutdown requirements of Specification 3.0.3 do not apply in MODES 5 and 6, because the ACTION requirements of individual specifications define the remedial measures to be taken.

Specification 3.0.4 establishes limitations on MODE changes when a Limiting Condition for Operation is not met. It precludes placing the facility in a higher MODE of operation when the requirements for a Limiting Condition for Operation are not met and continued noncompliance to these conditions would result in a shutdown to comply with the ACTION requirements if a change in MODES were permitted. The purpose of this specification is to ensure that facility operation is not initiated or that higher MODES of operation are not entered when corrective action is being taken to obtain compliance with a specification by restoring equipment to OPERABLE status or parameters to specified limits. Compliance with ACTION requirements that permit continued operation of the facility for an unlimited period of time provides an acceptable level of safety for continued operation without regard to the status of the plant before or after a MODE change. Therefore, in this case, entry into an OPERATIONAL MODE or other specified condition may be made in accordance with the provisions of the ACTION requirements. The provisions of this specification should not, however, be interpreted as endorsing the failure to exercise good practice in restoring systems or components to OPERABLE status before plant startup.

When a shutdown is required to comply with ACTION requirements, the provisions of Specification 3.0.4 do not apply because they would delay placing the facility in a lower MODE of operation.

Specification 3.0.5 establishes the allowance for restoring equipment to service under administrative controls when it has been removed from service or declared inoperable to comply with ACTIONS. The sole purpose of this Specification is to provide an exception to Specifications 3.0.1 and 3.0.2 (e.g., to not comply with the applicable Required Action(s)) to allow the performance of required testing to demonstrate:

a. The OPERABILITY of the equipment being returned to service; or

b. The OPERABILITY of other equipment.

The administrative controls ensure the time the equipment is returned to service in conflict with the requirements of the ACTIONS is limited to the time absolutely necessary to perform the allowed required testing. This Specification does not provide time to perform any other preventive or corrective maintenance.

An example of demonstrating the OPERABILITY of the equipment being returned to service is reopening a containment isolation valve that has been closed to comply with Required Actions and must be reopened to perform the required testing.

An example of demonstrating the OPERABILITY of other equipment is taking an inoperable channel or trip system out of the tripped condition to prevent the trip function from occurring during the performance of required testing on another channel in the other trip system. A similar example of demonstrating the OPERABILITY of other equipment is taking an inoperable channel or trip system out of the tripped condition to permit the logic to function and indicate the appropriate response during the performance of required testing on another channel in the same trip system.

Specifications 4.0.1 through 4.0.5 establish the general requirements applicable to Surveillance Requirements. These requirements are based on the Surveillance Requirements stated in the Code of Federal Regulations, 10 CFR 50.36(c)(3):

"Surveillance requirements are requirements relating to test, calibration, or inspection to assure that the necessary quality of systems and components is maintained, that facility operation will be within safety limits, and that the limiting conditions of operation will be met."

Specification 4.0.1 establishes the requirement that surveillances must be met during the OPERATIONAL MODES or other conditions for which the requirements of the Limiting Conditions for Operation apply unless otherwise stated in an individual Surveillance Requirement. The purpose of this specification is to ensure that surveillances are performed to verify the OPERABILITY of systems and components and that parameters are within specified limits to ensure safe operation of the facility when the plant is in a MODE or other specified condition for which the associated Limiting Conditions for Operation are applicable. Failure to meet a Surveillance within the specified surveillance interval, in accordance with Specification 4.0.2, constitutes a failure to meet a Limiting Condition for Operation.

Systems and components are assumed to be OPERABLE when the associated Surveillance Requirements have been met. Nothing in this Specification, however, is to be construed as implying that systems or components are OPERABLE when either:

a. The systems or components are known to be inoperable, although still meeting the Surveillance Requirements or

b. The requirements of the Surveillance(s) are known to be not met between required Surveillance performances.

Surveillance requirements do not have to be performed when the facility is in an OPERATIONAL MODE or other specified conditions for which the requirements of the associated Limiting Condition for Operation do not apply unless otherwise specified. The Surveillance Requirements associated with a Special Test Exception are only applicable when the Special Test Exception is used as an allowable exception to the requirements of a Specification.

Unplanned events may satisfy the requirements (including applicable acceptance criteria) for a given Surveillance Requirement. In this case, the unplanned event may be credited as fulfilling the performance of the Surveillance Requirement. This allowance includes those Surveillance Requirement(s) whose performance is normally precluded in a given MODE or other specified condition.

Surveillance Requirements, including Surveillances invoked by ACTION requirements, do not have to be performed on inoperable equipment because the ACTIONS define the remedial measures that apply. Surveillances have to be met and performed in accordance with Specification 4.0.2, prior to returning equipment to OPERABLE status.

Upon completion of maintenance, appropriate post maintenance testing is required to declare equipment OPERABLE. This includes ensuring applicable Surveillances are not failed and their most recent performance is in accordance with Specification 4.0.2. Post maintenance testing may not be possible in the current MODE or other specified conditions in the Applicability due to the necessary unit parameters not having been established. In these situations, the equipment may be considered OPERABLE provided testing has been satisfactorily completed to the extent possible and the equipment is not otherwise believed to be incapable of performing its function. This

will allow operation to proceed to a MODE or other specified condition where other necessary post maintenance tests can be completed. An example of this process:

Emergency feedwater (EFW) pump turbine maintenance during refueling that requires testing at steam pressure > 500 psig. However, if other appropriate testing is satisfactorily completed, the AFW System can be considered OPERABLE. This allows startup and other necessary testing to proceed until the plant reaches the steam pressure required to perform the testing.

Specification 4.0.2 establishes the limit for which the specified time interval for Surveillance Requirements may be extended. It permits an allowable extension of the normal surveillance interval to facilitate surveillance scheduling and consideration of plant operating conditions that may not be suitable for conducting the surveillance; e.g., transient conditions or other ongoing surveillance or maintenance activities. It also provides flexibility to accommodate the length of a fuel cycle for surveillances that are performed at each refueling outage and are specified with an 18-month surveillance interval. It is not intended that this provision be used repeatedly as a convenience to extend surveillance intervals beyond that specified for surveillances that are not performed during refueling outages. The limitation of Specification 4.0.2 is based on engineering judgement and the recognition that the most probable result of any particular surveillance being performed is the verification of conformance with the Surveillance Requirements. This provision is sufficient to ensure that the reliability ensured through surveillance activities is not significantly degraded beyond that obtained from the specified surveillance interval.

Specification 4.0.3 establishes the flexibility to defer declaring affected equipment inoperable or an affected variable outside the specified limits when a Surveillance has not been completed within the specified surveillance interval. A delay period of up to 24 hours or up to the limit of the specified surveillance interval, whichever is greater, applies from the point in time that it is discovered that the Surveillance has not been performed in accordance with Specification 4.0.2, and not at the time that the specified frequency was not met.

This delay period provides adequate time to complete Surveillances that have been missed. This delay period permits the completion of a Surveillance before complying with ACTION requirements or other remedial measures that might preclude completion of the Surveillance.

The basis for this delay period includes consideration of unit conditions, adequate planning, availability of personnel, the time required to perform the Surveillance, the safety significance of the delay in completing the required Surveillance, and the recognition that the most probable result of any particular Surveillance being performed is the verification of conformance with the requirements.

When a Surveillance with a surveillance interval based not on time intervals, but upon specified unit conditions, operating situations, or requirements of regulations (e.g., prior to entering MODE 1 after each fuel loading, or in accordance with 10 CFR 50, Appendix J, as modified by approved exemptions, etc.) is discovered to not have been performed

when specified, Specification 4.0.3 allows for the full delay period of up to the specified surveillance interval to perform the Surveillance. However, since there is not a time interval specified, the missed Surveillance should be performed at the first reasonable opportunity.

Specification 4.0.3 provides a time limit for, and allowances for the performance of, Surveillances that become applicable as a consequence of MODE changes imposed by ACTION requirements.

Failure to comply with the specified surveillance intervals for Surveillance Requirements is expected to be an infrequent occurrence. Use of the delay period established by Specification 4.0.3 is a flexibility which is not intended to be used as an operational convenience to extend Surveillance intervals. While up to 24 hours or the limit of the specified surveillance interval is provided to perform the missed surveillance, it is expected that the missed Surveillance will be performed at the first reasonable opportunity. The determination of the first reasonable opportunity should include consideration of the impact on plant risk (from delaying the Surveillance as well as any plant configuration changes required or shutting the plant down to perform the Surveillance) and impact on any analysis assumptions, in addition to unit conditions, planning, availability of personnel, and the time required to perform the Surveillance. This risk impact should be managed through the program in place to implement 10 CFR 50.65(a)(4) and its implementation guidance, NRC Regulatory Guide 1.182, 'Assessing and Managing Risk Before Maintenance Activities at Nuclear Power Plants.' This Regulatory Guide addresses consideration of temporary and aggregate risk impacts, determination of risk management action thresholds, and risk management action up to and including plant shutdown. The missed Surveillance should be treated as an emergent condition, as discussed in the Regulatory Guide. The risk evaluation may use quantitative, qualitative, or blended methods. The degree of depth and rigor of the evaluation should be commensurate with the importance of the component. Missed Surveillances for important components should be analyzed quantitatively. If the results of the risk evaluation determine the risk increase is significant, this evaluation should be used to determine the safest course of action. All missed Surveillances will be placed in the Corrective Action Program.

If a Surveillance is not completed within the allowed delay period, then the equipment is considered inoperable or the variable is considered outside the specified limits and entry into the ACTION requirements for the applicable Limiting Condition for Operation conditions begin immediately upon expiration of the delay period. If a Surveillance is failed within the delay period, then the equipment is inoperable, or the variable is outside the specified limits and entry into the ACTION requirements for the applicable Limiting Condition for Operation conditions begin immediately upon the failure of the Surveillance.

Completion of the Surveillance within the delay period allowed by this Specification, or within the Allowed Outage time of the ACTIONS, restores compliance with Specification 4.0.1.

Specification 4.0.4 establishes the requirement that all applicable surveillances must be met before entry into an OPERATIONAL MODE or other condition of operation specified in the Applicability statement. The purpose of this specification is to ensure that system and component OPERABILITY requirements or parameter limits are met before entry into a MODE or condition for which these systems and components ensure safe operation of the facility. This provision applies to changes in OPERATIONAL MODES or other specified conditions associated with plant shutdown as well as startup.

Under the provisions of this specification, the applicable Surveillance Requirements must be performed within the specified surveillance interval to ensure that the Limiting Conditions for Operation are met during initial plant startup or following a plant outage.

Certain Specifications allow an exception to the requirements of Specification 4.0.4 for individual Surveillance Requirements when the surveillance can only be performed after entering the MODE or condition specified in the Applicability statement. When surveillance requirements become applicable as a consequence of an exception to Specification 4.0.4, a period of 24 hours, unless otherwise stipulated in the individual technical specification, is permitted to allow completion of surveillance testing. During this period, the equipment is considered OPERABLE or the variable within specified limits provided all other necessary surveillance testing has been completed satisfactorily and the equipment or variable is not otherwise known to be inoperable or outside specified limits. Considering the equipment OPERABLE or the variable within specified limits upon entering the MODE or condition specified in the Applicability statement with a surveillance requirement exempt from the provision of Specification 4.0.4 ensures compliance with Specification 3.0.4. If the surveillance fails within the 24-hour period, then the equipment is inoperable or the variable is outside the specified limits and the applicable ACTIONS begin immediately upon the failure of the surveillance test. Similarly, if the testing is not completed within 24 hours, the equipment is inoperable or the variable is outside specified limits and the ACTION requirements are immediately applicable upon expiration of the 24 hours.

When a shutdown is required to comply with ACTION requirements, the provisions of Specification 4.0.4 do not apply because this would delay placing the facility in a lower MODE of operation.

Specification 4.0.5 establishes the requirement that inservice inspection of ASME Code Class 1, 2, and 3 components and inservice testing of ASME Code Class 1, 2, and 3 pumps and valves shall be performed in accordance with a periodically updated version of Section XI of the ASME Boiler and Pressure Vessel Code and the ASME OM Code including applicable Addenda as required by 10 CFR 50.55a. These requirements apply except when relief has been provided in writing by the Commission.

This specification includes a clarification of the frequencies for performing the inservice inspection and testing activities required by Section XI of the ASME Boiler and Pressure Vessel Code and the ASME OM Code including applicable Addenda. This clarification is provided to ensure consistency in surveillance intervals throughout the Technical Specifications and to remove any ambiguities relative to the frequencies for performing the required inservice inspection and testing activities.

Specification 4.0.5 (continued)

Under the terms of this specification, the more restrictive requirements of the Technical Specifications take precedence over the ASME Boiler and Pressure Vessel Code and the ASME OM Code including applicable Addenda. The requirements of Specification 4.0.4 to perform surveillance activities before entry into an OPERATIONAL MODE or other specified condition takes precedence over the ASME OM Code provision which allows pumps that can only be tested during plant operation to be tested within 1 week following plant startup.

3/4.1.1 BORATION CONTROL

3/4.1.1.1 and 3/4.1.1.2 SHUTDOWN MARGIN

A sufficient SHUTDOWN MARGIN ensures that: (1) the reactor can be made subcritical from all operating conditions, (2) the reactivity transients associated with postulated accident conditions are controllable within acceptable limits, and (3) the reactor will be maintained sufficiently subcritical to preclude inadvertent criticality in the shutdown condition.

SHUTDOWN MARGIN requirements vary throughout core life as a function of fuel depletion, RCS boron concentration, and RCS T_{avg}. The most restrictive condition occurs at EOL, with T_{avg} at no-load operating temperature, and is associated with a postulated steam line break accident and resulting uncontrolled RCS cooldown. In the analysis of this accident, a minimum SHUTDOWN MARGIN as specified in the CORE OPERATING LIMITS REPORT (COLR) is required to control the reactivity transient. Accordingly, the SHUTDOWN MARGIN requirement is based upon this limiting condition and is consistent with FSAR safety analysis assumptions. With T_{avg} less than 200° F, the reactivity transients resulting from a postulated steam line break cooldown are minimal. A SHUTDOWN MARGIN as specified in the COLR and a boron concentration of greater than the limit specified in the COLR are required to permit sufficient time for the operator to terminate an inadvertent boron dilution event with T_{avg} less than 200°F.

The "equivalent to" statement in the Action is a provision providing an alternate method of emergency boration via the RWST at an increased flow rate to account for the lower boron concentration within the RWST.

3/4.1.1.3 MODERATOR TEMPERATURE COEFFICIENT

The limitations on moderator temperature coefficient (MTC) are provided to ensure that the value of this coefficient remains within the limiting condition assumed in the FSAR accident and transient analyses.

The MTC values of this specification are applicable to a specific set of plant conditions; accordingly, verification of MTC values at conditions other than those explicitly stated will require extrapolation to those conditions in order to permit an accurate comparison.

The most negative MTC, value equivalent to the most positive moderator density coefficient (MDC), was obtained by incrementally correcting the MDC used in the FSAR analyses to nominal operating conditions. These corrections involved subtracting the incremental change in the MDC associated with a core condition of all rods inserted (most positive MDC) to an all rods withdrawn condition and, a conversion for the rate of change of moderator density with temperature at RATED THERMAL POWER conditions. This value of the MDC was then transformed into the limiting end of cycle life (EOL) MTC value as specified in the COLR. The 300 ppm surveillance limit MTC value as specified in the COLR represents a conservative value (with corrections for burnup and soluble boron) at a core condition of 300 ppm equilibrium boron concentration and is obtained by making these corrections to the limiting MTC value as specified in the COLR.

BORATION CONTROL

3/4.1.1.3 MODERATOR TEMPERATURE COEFFICIENT (Continued)

The surveillance requirements for measurement of the MTC at the beginning and near the end of the fuel cycle are adequate to confirm that the MTC remains within its limits since this coefficient changes slowly due principally to the reduction in RCS boron concentration associated with fuel burnup.

The cycle specific upper MTC limit in the COLR is determined during the design of each cycle. The upper MTC limit provides assurance of compliance with the ATWS Rule and the basis for the Rule by limiting core damage frequency from an ATWS event below the target of 1.0×10^{-5} per reactor year established in SECY-83-293. The COLR limit will also assure that the core will have an MTC less positive than -8 PCM/DEG F for at least 95% of the cycle time at full power.

Prior to initial operation above 5% RATED THERMAL POWER after each fuel loading, the MTC is measured as required by Surveillance Requirement 4.1.1.3.a. A measurement bias is derived from the difference between test measurement and test prediction. All predicted values of MTC for the cycle are conservatively corrected based on measurement bais. The corrected predictions are then compared to the maximum upper limit of Technical Specification 3.1.1.3. Control rod withdrawal limits are established, if required, to assure all corrected values of predicted MTC will be less positive than the limit specified in the COLR, and the maximum upper limit required by Technical Specification 3.1.1.3.

3/4.1.1.4 MINIMUM TEMPERATURE FOR CRITICALITY

This specification ensures that the reactor will not be made critical with the Reactor Coolant System average temperature less than 551° F. This limitation is required to ensure: (1) the moderator temperature coefficient is within its analyzed temperature range, (2) the trip instrumentation is within its normal operating range, (3) the pressurizer is capable of being in an OPERABLE status with a steam bubble, and (4) the reactor vessel is above its minimum RT_{NDT} temperature.

3/4.1.2 BORATION SYSTEMS

The limitations on OPERABILITY of isolation provisions for the Boron Thermal Regeneration System and the Reactor Water Makeup System in Modes 4, 5, and 6 ensure that the boron dilution flow rates cannot exceed the value assumed in the transient analysis.

The "equivalent to" statement in the Action for LCO 3.1.2.7 is a provision providing an alternate method of emergency boration via the RWST at an increased flow rate to account for the lower boron concentration within the RWST.

Upon a failure to meet the LCO, the action statement requires immediate suspension of core alternations and positive reactivity changes. Operations that individually add limited, positive reactivity are acceptable when, combined with other actions that add negative reactivity, the overall net reactivity addition is zero or negative. For example, a positive reactivity addition caused by temperature fluctuations from inventory addition or temperature control fluctuations is acceptable if it is combined with a negative reactivity addition such that the overall, net reactivity addition is zero or negative. Refer to TS Bases 3/4.9.1, Boron Concentration, for limits on boron concentration and water temperature for MODE 6 action statements involving suspension of positive reactivity changes. In addition, if the shutdown margin is not verified within one hour, boration must commence and continue until shutdown margin is adequate and compliance with the LCO is restored.

A resin bed is considered saturated with boron when the effluent boron concentration is within 5% or 5 ppm, whichever is greater, of the Reactor Coolant System boron concentration at the time the resin bed was saturated. Saturation ensures that no further boron may be removed by the resin bed regardless of the current boron concentration.

3/4.1.3 MOVABLE CONTROL ASSEMBLIES

The specifications of this section ensure that: (1) acceptable power distribution limits are maintained, (2) the minimum SHUTDOWN MARGIN is maintained, and (3) the potential effects of rod misalignment on associated accident analyses are limited. OPERABILITY of the control rod position indicators is required to determine control rod positions and thereby ensure compliance with the control rod alignment and insertion limits. Verification that the Digital Rod Position Indicator agrees with the demanded position within $\pm$ 12 steps at 24, 48, 120, and 228 steps withdrawn for the Control Banks and 18, 210, and 228 steps withdrawn for the Shutdown Banks provides assurances that the Digital Rod Position Indicator is operating correctly over the full range of indication. Since the Digital Rod Position Indication System does not indicate the actual shutdown rod position between 18 steps and 210 steps, only points in the indicated ranges are picked for verification of agreement with demanded position.

The ACTION statements which permit limited variations from the basic requirements are accompanied by additional restrictions which ensure that the original design criteria are met. Misalignment of a rod requires measurement of peaking factors and a restriction in THERMAL POWER. These restrictions provide assurance of fuel rod integrity during continued operation. In addition, those safety analyses affected by a misaligned rod are reevaluated to confirm that the results remain valid during future operation.

The maximum rod drop time restriction is consistent with the assumed rod drop time used in the safety analyses. Measurement with rods at their individual mechanical fully withdrawn position, T_{avg} greater than or equal to 551°F and all reactor coolant pumps operating ensures that the measured drop times will be representative of insertion times experienced during a Reactor trip at operating conditions.

The fully withdrawn position of shutdown and control banks can be varied between 225 and the mechanical fully withdrawn position (up to 232 steps), inclusive. An engineering evaluation was performed to allow operation to the 232 step maximum. The 225 to 232 step interval allows axial repositioning to minimize RCCA wear.

Control rod positions and OPERABILITY of the rod position indicators are required to be verified on a nominal basis of once per 12 hours with more frequent verifications required if an automatic monitoring channel is inoperable. These verification frequencies are adequate for assuring that the applicable LCOs are satisfied.

For Specification 3.1.3.1 ACTIONS b. and c., it is incumbent upon the plant to verify the trippability of the inoperable control rod(s). Trippability is defined in Attachment C to a letter dated December 21, 1984, from E. P. Rahe (Westinghouse) to C. 0. Thomas (NRC). This may be by verification of a control system failure, usually electrical in nature, or that the failure is associated with the control rod stepping mechanism. In the event the plant is unable to verify the rod(s) trippability, it must be assumed to be untrippable and thus falls under the requirements of ACTION a. Assuming a controlled shutdown from 100% RATED THERMAL POWER, this allows approximately 4 hours for this verification.

The specifications of this section provide assurance of fuel integrity during Condition I (Normal Operation) and II (Incidents of Moderate Frequency) events by: (1) maintaining the minimum DNBR in the core greater than or equal to the design DNBR value during normal operation and in short-term transients, and (2) limiting the fission gas release, fuel pellet temperature, and cladding mechanical properties to within assumed design criteria. In addition, limiting the peak linear power density during Condition I events provides assurance that the initial conditions assumed for the LOCA analyses are met and the ECCS acceptance criteria limit of 2200°F is not exceeded.

The definitions of certain hot channel and peaking factors as used in these specifications are as follows:

$F_Q(Z)$ Heat Flux Hot Channel Factor, is defined as the maximum local heat flux on the surface of a fuel rod at core elevation Z divided by the average fuel rod heat flux, allowing for manufacturing tolerances on fuel pellets and rods;

$F^N_{\Delta H}$ Nuclear Enthalpy Rise Hot Channel Factor, is defined as the ratio of the integral of linear power along the rod with the highest integrated power to the average rod power.

3/4.2.1 AXIAL FLUX DIFFERENCE

The limits on AXIAL FLUX DIFFERENCE (AFD) specified in the CORE OPERATING LIMITS REPORT (COLR) assure that the design limits on peak local power density and minimum DNBR are not exceeded during normal operation and the consequences of any Non-LOCA event would be within specified acceptance criteria.

Provisions for monitoring the AFD on an automatic basis are derived from the plant process computer through the AFD Monitor Alarm. The computer calculates the AFD for each of the OPERABLE excore detector channels and provides an alarm message if the AFD for at least two of the OPERABLE excore channels are outside the AFD limits and the THERMAL POWER is greater than 50 percent of RATED THERMAL POWER.

3/4.2.2 and 3/4.2.3 HEAT FLUX HOT CHANNEL FACTOR and NUCLEAR ENTHALPY RISE HOT CHANNEL FACTOR

The limits on heat flux hot channel factor and nuclear enthalpy rise hot channel factor ensure that: (1) the design limits on peak local power density and minimum DNBR are not exceeded and (2) in the event of a LOCA, the peak fuel clad temperature will not exceed the 2200°F ECCS acceptance criteria limit.

Each of these is measurable but will normally only be determined periodically as specified in Specifications 4.2.2 and 4.2.3. This periodic surveillance is sufficient to ensure that the limits are maintained provided:

a. Control rods in a single group move together with no individual rod insertion differing by more than ± 12 steps, indicated, from the group demand position;

b. Control rod groups are sequenced with overlapping groups as described in Specification 3.1.3.6;

c. The control rod insertion limits of Specifications 3.1.3.5 and 3.1.3.6 are maintained; and

d. The axial power distribution, expressed in terms of AXIAL FLUX DIFFERENCE, is maintained within the limits.

3/4.2.2 and 3/4.2.3 HEAT FLUX HOT CHANNEL FACTOR and NUCLEAR ENTHALPY RISE HOT CHANNEL FACTOR (Continued)

$F^N_{\Delta H}$ will be maintained within its limits provided Conditions a. through d. above are maintained. Margin is maintained between the safety analysis limit DNBR and the design limit DNBR. There is additional margin available to offset any other DNBR penalties and for plant design flexibility.

When an $F_Q(Z)$ measurement is taken, an allowance for both measurement error and manufacturing tolerance must be made. An allowance of 5% is appropriate for a full-core map taken with the movable incore detectors, while 5.21% is appropriate for surveillance results determined with the fixed incore detectors. A 3% allowance is appropriate for manufacturing tolerance.

The hot channel factor $F^M_Q(Z)$ is measured periodically and increased by a cycle and height dependent power factor appropriate to Relaxed Axial Offset Control (RAOC) operation, W(Z), to provide assurance that the limit on the hot channel factor $F_Q(Z)$ is met. W(Z) accounts for the effects of normal operation transients and was determined from expected power control maneuvers over the full range of burnup conditions in the core. The W(Z) function for normal operation is specified in the CORE OPERATING LIMITS REPORT per Specification 6.8.1.6.

When RCS $F^N_{\Delta H}$ is measured, no additional allowances are necessary prior to comparison with the established limit. Appropriate $F^N_{\Delta H}$ measurement uncertainties are already incorporated into the limits $F^N_{\Delta H}$ established in the CORE OPERATING LIMITS REPORT for each measurement system, and a bounding $F^N_{\Delta H}$ measurement uncertainty has been applied in determination of the design DNBR value. The appropriate $F^N_{\Delta H}$ measurement uncertainties are 4.13% for the fixed incore detector system and 4% for the movable incore detector system.

3/4.2.4 QUADRANT POWER TILT RATIO

The purpose of this specification is to detect gross changes in core power distribution between monthly Incore Detector System surveillances. During normal operation the QUADRANT POWER TILT RATIO is set equal to 1.0 once acceptability of core peaking factors has been established by review of incore surveillances. The limit of 1.02 is established as an indication that the power distribution has changed enough to warrant further investigation.

3/4.2.5 DNB PARAMETERS

The limits on the DNB-related parameters assure that each of the parameters is maintained within the normal steady-state envelope of operation assumed in the transient and accident analyses. The limits are consistent with the updated FSAR assumptions and have been analytically demonstrated adequate to assure compliance with acceptance criteria for each analyzed transient. Operating procedures include allowances for measurement and indication uncertainty so that the limits specified in the COLR for T_{avg} and for pressurizer pressure are not exceeded.

The 12-hour periodic surveillance of these parameters through instrument readout is sufficient to ensure that the parameters are restored within their limits following load changes and other expected transient operation.

The periodic surveillance of indicated RCS flow is sufficient to detect only flow degradation which could lead to operation outside the specified limit.

RCS flow must be greater than or equal to, 1) the Thermal Design Flow (TDF) with an allowance for measurement uncertainty and, 2) the minimum measured flow used in place of the TDF in the analysis of the DNB related events when the Revised Thermal Design Procedure (RTDP) methodology is utilized. Measurement of RCS total flow rate is performed by performance of either a precision calorimetric heat balance or normalized cold leg elbow tap ΔP measurements. RCS flow measurements using either the precision heat balance or the elbow tap ΔP measurement methods are to be performed at steady state conditions prior to operation above 95% rated thermal power (RTP) at the beginning of a new fuel cycle. The elbow tap RCS flow measurement methodology is described in WCAP-15404, "Justification of Elbow Taps for RCS Flow Verification at Seabrook Station", dated April 2000.

3/4.3.1 and 3/4.3.2 REACTOR TRIP SYSTEM and ENGINEERED SAFETY FEATURES ACTUATION SYSTEM INSTRUMENTATION

The OPERABILITY of the Reactor Trip System and the Engineered Safety Features Actuation System instrumentation and interlocks ensures that: (1) the associated ACTION and/or Reactor trip will be initiated when the parameter monitored by each channel or combination thereof reaches its Setpoint (2) the specified coincidence logic is maintained, (3) sufficient redundancy is maintained to permit a channel to be out-of-service for testing or maintenance, and (4) sufficient system functional capability is available from diverse parameters.

The OPERABILITY of these systems is required to provide the overall reliability, redundancy, and diversity assumed available in the facility design for the protection and mitigation of accident and transient conditions. The integrated operation of each of these systems is consistent with the assumptions used in the safety analyses. The Surveillance Requirements specified for these systems ensure that the overall system functional capability is maintained comparable to the original design standards. The periodic surveillance tests performed at the minimum frequencies are sufficient to demonstrate this capability.

Table 3.3-1 contains the action statements for inoperable Reactor Trip System Instrumentation. Actions 4 and 5, associated with the source range neutron flux instruments, each include a requirement to suspend operations involving positive reactivity changes. When complying with this action, operations that individually add limited, positive reactivity are acceptable when, combined with other actions that add negative reactivity, the overall net reactivity addition is zero or negative. For example, a positive reactivity addition caused by temperature fluctuations from inventory addition or temperature control fluctuations is acceptable if it is combined with a negative reactivity addition such that the overall, net reactivity addition is zero or negative.

Specified surveillance intervals and surveillance and maintenance outage times have been determined in accordance with WCAP-10271, "Evaluation of Surveillance Frequencies and Out of Service Times for the Reactor Protection Instrumentation System," and supplements to that report. Surveillance intervals and out of service times were determined based on maintaining an appropriate level of reliability of the Reactor Protection System and Engineered Safety Features instrumentation. The NRC Safety Evaluation Reports for WCAP-10271 and its supplements and revisions were provided on February 21, 1985, February 22, 1989 and April 30, 1990.

3/4.3.1 and 3/4.3.2 REACTOR TRIP SYSTEM and ENGINEERED SAFETY FEATURES ACTUATION SYSTEM INSTRUMENTATION (Continued)

The Engineered Safety Features Actuation System Instrumentation Trip Setpoints specified in Table 3.3-4 are the nominal values at which the bistables are set for each functional unit. A Setpoint is considered to be adjusted consistent with the nominal value when the "as measured" setpoint is within the band allowed for rack calibration accuracy and bistable setting accuracy. This setpoint methodology may result in the "as measured" trip setpoint exceeding the trip setpoint listed in the Technical Specifications. For example, a bistable with a trip setpoint of $\leq$ 109% has a span of 120%, a rack calibration accuracy of $\pm$ 0.50%, and a bistable setting accuracy of $\pm$ 0.25%. The bistable is considered to be adjusted to the trip setpoint, consistent with the Technical Specifications, as long as the "as measured" value for the bistable is $\leq$ 109% + [(0.5 + 0.25) (120%) / 100)], or $\leq$ 109.9%.

To accommodate the instrument drift assumed to occur between operational tests and the accuracy to which Setpoints can be measured and calibrated, Allowable Values for the Setpoints have been specified in Table 3.3-4. Operation with Setpoints less conservative than the Trip Setpoint but within the Allowable Value is acceptable since an allowance has been made in the safety analysis to accommodate this error. An optional provision has been included for determining the OPERABILITY of a channel when its Trip Setpoint is found to exceed the Allowable Value. The methodology of this option utilizes the "as measured" deviation from the specified calibration point for rack and sensor components in conjunction with a statistical combination of the other

3/4.3.1 and 3/4.3.2 REACTOR TRIP SYSTEM and ENGINEERED SAFETY FEATURES ACTUATION SYSTEM INSTRUMENTATION (continued)

uncertainties of the instrumentation to measure the process variable and the uncertainties in calibrating the instrumentation. In Equation 2.2-1, $Z + R\ S \leq TA$, the interactive effects of the errors in the rack and the sensor, and the "as measured" values of the errors are considered. Z, as specified in Table 3.3-4, in percent span, is the statistical summation of errors assumed in the analysis excluding those associated with the sensor and rack drift and the accuracy of their measurement. TA or Total Allowance is the difference, in percent span; R or Rack Error is the "as measured" deviation, in the percent span, for the affected channel from the specified Trip Setpoint. S or Sensor Error is either the "as measured" deviation of the sensor from its calibration point or the value specified in Table 3.3-4, in percent span, from the analysis assumptions. Use of Equation 2.2-1 allows for a sensor drift factor, an increased rack drift factor, and provides a threshold value for REPORTABLE EVENTS.

The methodology to derive the Trip Setpoints is based upon combining all of the uncertainties in the channels. Inherent to the determination of the Trip Setpoints are the magnitudes of these channel uncertainties. Sensor and rack instrumentation utilized in these channels are expected to be capable of operating within the allowances of these uncertainty magnitudes. Rack drift in excess of the Allowable Value exhibits the behavior that the rack has not met its allowance. Being that there is a small statistical chance that this will happen, an infrequent excessive drift is expected. Rack or sensor drift, in excess of the allowance that is more than occasional, may be indicative of more serious problems and should warrant further investigation.

The verification of response time at the specified frequencies provides assurance that the reactor trip and the engineered safety features actuation associated with each channel is completed within the time limit assumed in the safety analysis. No credit is taken in the analysis for those channels with response times indicated as not applicable (i.e., N.A.).

Response time may be verified by actual response time tests in any series of sequential, overlapping or total channel measurements, or by the summation of allocated sensor, signal processing and actuation logic response times with actual response time tests on the remainder of the channel. Allocations for sensor response times may be obtained from:

(1) Historical records based on acceptable response time tests (hydraulic, noise, or power interrupt tests);

(2) Inplace, onsite, or offsite (e.g., vendor) test measurements; or

(3) Utilizing vendor engineering specifications.

3/4.3.1 and 3/4.3.2 REACTOR TRIP SYSTEM and ENGINEERED SAFETY FEATURES ACTUATION SYSTEM INSTRUMENTATION (continued)

WCAP-13632-P-A, Revision 2, "Elimination of Pressure Sensor Response Time Testing Requirements," provides the basis and methodology for using allocated sensor response times in the overall verification of the channel response time for specific sensors identified in WCAP-13632-P-A, Revision 2. Response time verification for other sensor types not covered by WCAP-13632-P-A, Revision 2, must be demonstrated by test.

In consideration of other response time test procedures used at Seabrook Station the Resistance Temperature Detectors (RTDs) are not encompassed by this analysis as presented and will continue to be periodically tested.

For those sensors covered by WCAP-13632-P-A, Revision 2, the following actions must be implemented:

(a) A hydraulic response time test must be performed prior to installation of a new transmitter/switch or following refurbishment of the transmitter/switch (e.g., sensor cell or variable damping components) to determine an initial sensor-specific response time value;

(b) For transmitters and switches that use capillary tubes, a response time test must be performed after initial installation and after any maintenance or modification activity that could damage the capillary tubes;

(c) If variable damping is used*, a method to assure that the potentiometer is at the required setting and cannot be inadvertently changed must be implemented, or a hydraulic response time test of the sensor must be performed following each calibration; and

---

* Seabrook Station currently has no pressure transmitters with variable damping installed in any RPS or ESFAS application for which RTT is required; therefore, no Seabrook Station procedure changes or enhanced administrative controls are required. If in the future, a pressure transmitter with variable damping capability is used, then either procedure changes will be implemented and/or appropriate administrative controls will be established to assure the variable damping potentiometer cannot be inadvertently changed. Examples of such administrative controls may include use of pressure transmitters that are factory set and hermetically sealed to prohibit tampering or in situ application of a tamper seal (or sealant) on the potentiometer to secure and give a visual indication of the potentiometer position.

3/4.3.1 and 3/4.3.2 REACTOR TRIP SYSTEM and ENGINEERED SAFETY FEATURES ACTUATION SYSTEM INSTRUMENTATION (continued)

(d) Performing periodic drift monitoring for Model 1151, 1152, 1153 and 1154 Rosemount pressure and differential pressure transmitters, for which response time testing elimination is implemented, in accordance with the guidance contained in Rosemount Technical Bulletin No. 4 and continue to remain in full compliance with any prior commitments to NRC Bulletin 90-01, Supplement 1, "Loss of Fill-Oil in Transmitters Manufactured by Rosemount." Seabrook Station may complete the following actions as an alternative to performing periodic drift monitoring of Rosemount transmitters:

(1) Assure that operators and technicians are aware of the Rosemount transmitter loss of fill-oil issue and will make provisions to assure that technicians monitor for sensor response time degradation during the performance of calibrations and functional tests of these transmitters; and

(2) Review and revise surveillance testing procedures, if necessary, to assure that calibrations will be performed using equipment designed to provide a step function or fast ramp in the process variable and that calibrations and functional tests are being performed in a manner that allows simultaneous monitoring of both the input and output response of the transmitter under test, thus allowing, with reasonable assurance, the recognition of significant response time degradation.

WCAP-14036-P-A, Revision 1, "Elimination of Periodic Protection Channel Response Time Tests," provides the basis and methodology for using allocated signal processing and actuation logic response times in the overall verification of the protection system channel response time.

Table 8-1 of WCAP-14036-P-A, Revision 1, presents bounding generic system response time allocations. These bounding response times were used in the response times evaluated for each protection function at Seabrook Station. Current response time testing procedures require dividing the Solid State Protection System (SSPS) response times instead of applying the SSPS response time as a total string value. Future procedure changes may negate this redistribution if overall channel response time conforms to the WCAP-14036-P-A, Revision 1 methodology and remains compliant with accident analysis. The following current exceptions to WCAP-14036-P-A, Revision 1 time allocations apply to Seabrook Station:

3/4.3.1 and 3/4.3.2 REACTOR TRIP SYSTEM and ENGINEERED SAFETY FEATURES ACTUATION SYSTEM INSTRUMENTATION (continued)

1. Seabrook Station procedures include the master and slave relays of the SSPS when response time testing the final actuated device. Since response times of the final actuated devices are not exempted from response time tests, these components of the SSPS will continue to be tested along with their applicable final actuated equipment. For the SSPS portion of the protection functions, only the analyzed FMEA value for the input relay and a conservative value for the SSPS logic has been applied.

2. In consideration of other response time test procedures used at Seabrook the following functions are not encompassed by this analysis as presented in WCAP-14036-P-A, Revision 1 and will continue to be periodically tested. These functions are:

   - Reactor Trip on Reactor Coolant Pump Undervoltage
   - Reactor Trip on Reactor Coolant Pump Underfrequency
   - Diesel Generator Start on Loss of Offsite Power
   - Control Building Air Emergency Fan/Filter Actuation on Control Room High Radiation

The allocations for sensor, signal conditioning and actuation logic response times must be verified prior to placing the component in operational service and re-verified following maintenance that may adversely affect response time. In general, electrical repair work does not impact response time provided the parts used for repair are of the same type and value. Specific components identified in WCAP-14036-P-A, Revision 1 may be replaced without verification testing. One example where response time could be affected is replacing the sensing assembly of a transmitter.

The Seabrook Station sensor functions to which the basis and methodology of WCAP-13632-P-A, Revision 2 has been applied are:

- Steam Generator Water Level
- Pressurizer Pressure
- Steamline Pressure
- Containment Pressure
- Reactor Coolant Flow

The Seabrook Station systems to which the basis and methodology of WCAP-14036-P-A, Revision 1 has been applied are:

- Process Protection System
- Nuclear Instrumentation System
- Logic System

3/4.3.1 and 3/4.3.2 REACTOR TRIP SYSTEM and ENGINEERED SAFETY FEATURES ACTUATION SYSTEM INSTRUMENTATION (continued)

At the end of the injection phase of a LOCA, the RWST will be nearly empty. Continued cooling must be provided by the ECCS to remove decay heat. The source of water for the ECCS pumps is automatically switched to the containment recirculation sumps. The low head residual heat removal (RHR) pumps and containment spray pumps draw the water from the containment recirculation sumps, the RHR pumps pump the water through the RHR heat exchangers, inject the water back into the RCS, and upon manual alignment supply the cooled water to the other ECCS pumps. Switchover from the RWST to the containment recirculation sumps must occur before the RWST empties to prevent damage to the ECCS pumps and a loss of core cooling capability. For similar reasons, switchover must not occur before there is sufficient water in the containment sump to provide sufficient net positive suction head (NPSH) to support ECCS pump operation. Furthermore, early switchover must not occur to ensure that sufficient borated water is injected from the RWST. This ensures the reactor remains shut down in the recirculation mode. To satisfy these requirements, the RWST Level Low-Low Allowable Value/Trip Setpoint has both upper and lower limits. The lower limit ensures switchover occurs before the RWST empties to prevent ECCS pump damage while the upper limit ensures the reactor remains shut down and that there is adequate water inventory in the containment recirculation sumps to provide ECCS pump suction.

The Engineered Safety Features Actuation System senses selected plant parameters and determines whether or not predetermined limits are being exceeded. If they are, the signals are combined into logic matrices sensitive to combinations indicative of various accidents, events, and transients. Once the required logic combination is completed, the system sends actuation signals to those Engineered Safety Features components whose aggregate function best serves the requirements of the condition. As an example, the following actions may be initiated by the Engineered Safety Features Actuation System to mitigate the consequences of a steam line break or loss-of-coolant accident: (1) Safety

3/4.3.1 and 3/4.3.2 REACTOR TRIP SYSTEM and ENGINEERED SAFETY FEATURES ACTUATION SYSTEM INSTRUMENTATION (Continued)

Injection pumps start and automatic valves position, (2) Reactor trip, (3) feedwater isolation, (4) startup of the emergency diesel generators, (5) containment spray pumps start and automatic valves position, (6) containment isolation, (7) steam line isolation, (8) turbine trip, (9) emergency feedwater pumps start and automatic valves position, (10) containment cooling fans start and automatic valves position, and (11) automatic service water valves position.

The Engineered Safety Features Actuation System interlocks perform the following functions:

P-4 Reactor tripped - Actuates Turbine trip, closes main feedwater valves on T_{avg} below Setpoint, prevents the opening of the main feedwater valves which were closed by a Safety Injection or High Steam Generator Water Level signal, allows Safety Injection block so that components can be reset or tripped.

Reactor not tripped - prevents manual block of Safety Injection.

P-11 On increasing pressurizer pressure, P-11 automatically reinstates Safety Injection actuation on low pressurizer pressure. On decreasing pressure, P-11 allows the manual block of Safety Injection actuation on low pressurizer pressure, and the manual block of SI and steamline isolation on steamline low pressure. On the manual block of steamline low pressure, manual block of steamline low pressure automatically initiates steamline isolation on steam generator pressure negative rate - high.

P-14 On increasing steam generator water level, P-14 automatically trips the turbine and all feedwater isolation valves; inhibits feedwater control valve modulation; and blocks the start of the startup feedwater pump.

3/4.3.3 MONITORING INSTRUMENTATION

3/4.3.3.1 RADIATION MONITORING FOR PLANT OPERATIONS

The OPERABILITY of the radiation monitoring instrumentation for plant operations ensures that: (1) the associated action will be initiated when the radiation level monitored by each channel or combination thereof reaches its Setpoint, (2) the specified coincidence logic is maintained, and (3) sufficient redundancy is maintained to permit a channel to be out of service for testing or maintenance. The radiation monitors for plant operations sense radiation levels in selected plant systems and locations and determine whether or not predetermined limits are being exceeded. If they are, the signals are combined into logic matrices sensitive to combinations indicative of various accidents

MONITORING INSTRUMENTATION

3/4.3.3.1 RADIATION MONITORING FOR PLANT OPERATIONS (Continued)

and abnormal conditions. Once the required logic combination is completed, the system sends actuation signals to initiate alarms or automatic isolation action and actuation of Emergency Exhaust or Ventilation Systems.

3/4.3.3.2 (THIS SPECIFICATION NUMBER IS NOT USED)

3/4.3.3.3 (THIS SPECIFICATION NUMBER IS NOT USED)

3/4.3.3.4 (THIS SPECIFICATION NUMBER IS NOT USED)

3/4.3.3.5 REMOTE SHUTDOWN SYSTEM

The OPERABILITY of the Remote Shutdown System ensures that sufficient capability is available to permit safe shutdown of the facility from locations outside of the control room. This capability is required in the event control room habitability is lost and is consistent with General Design Criterion 19 of Appendix A to 10 CFR Part 50.

The OPERABILITY of the Remote Shutdown System ensures that a fire will not preclude achieving safe shutdown. The Remote Shutdown System instrumentation, control, and power circuits and transfer switches necessary to eliminate effects of the fire and allow operation of instrumentation, control and power circuits required to achieve and maintain a safe shutdown condition are independent of areas where a fire could damage systems normally used to shut down the reactor. This capability is consistent with General Design Criterion 3 and Appendix R to 10CFRPart 50.

The Technical Specifications (T/S) require surveillance testing of selected equipment used for safe shutdown from outside the control room at Remote Safe Shutdown (RSS) locations. The required equipment is listed in Table 3.3-9. The selection criteria for the Transfer Switch/Control Circuit portion of the table is the primary equipment which has remote/local selector switches and is required to perform the reactor coolant system inventory and pressure control, reactivity control, and decay heat removal functions to achieve and maintain hot standby. Redundant, safety grade equipment is provided for GDC 19 shutdown. For Appendix R shutdown, only one train of equipment (safety or non-safety related) is required; redundancy is not a requirement. Therefore, some equipment in Table 3.3-9 is required for a GDC 19 shutdown but not for a GDC 3/Appendix R shutdown. Seabrook is a hot standby safe shutdown design basis plant (see UFSAR Section 5.4.7.2.i). Support equipment, and equipment required only to achieve and maintain cold shutdown, are not required to be included in the T/S table.

MONITORING INSTRUMENTATION

3/4.3.3.6 ACCIDENT MONITORING INSTRUMENTATION

BACKGROUND

The OPERABILITY of the accident monitoring instrumentation ensures that sufficient information is available on selected plant parameters to monitor and assess these variables following an accident. This capability is consistent with the recommendations of Regulatory Guide 1.97, Revision 3, "Instrumentation for Light-Water-Cooled Nuclear Power Plants to Assess Plant Conditions During and Following an Accident," May 1983 and NUREG-0737, "Clarification of TMI Action Plan Requirements," November 1980.

LCO

The purpose of the post-accident monitoring (PAM) instrumentation required by this Technical Specification (TS) is to enable the operator to monitor safety functions, take any manual actions required to support the accomplishment of safety functions, and determine the effect of manual actions during and following a design basis accident. The instrumentation also enables the operator to maintain the plant in a hot shutdown condition, or to proceed to cold shutdown.

The instrument channels required to be operable by this LCO include two classes of parameters identified during implementation of Regulatory Guide 1.97: Type A variables and Category 1 key variables. Type A variables are those that provide primary information for the control room operators to take specific preplanned manual actions for which no automatic control is provided. These actions are required for safety systems to accomplish their safety functions for design basis accident events. (Actions taken as a result of equipment failures, e.g., "Response Not Obtained" column in the Emergency Operating Procedures (EOPs), are excluded). Key variables are those variables that provide the primary information (essential for the direct accomplishment of the specified safety functions) required to permit the control room operating crew to:

3/4.3.3.6 ACCIDENT MONITORING INSTRUMENTATION (Continued)

LCO (Continued)

a. Perform the diagnosis specified in the EOPs for design basis accidents.

b. Take any manual action required to mitigate the consequences of an accident.

c. Monitor the operation of safety systems.

The PAM instruments controlled by this TS are identified with an orange nameplate containing black lettering. PAM instruments, such as dedicated recorders and plasma displays are provided where direct and immediate trend or transient information is essential for operator information or action. An operable PAM recorder must be capable of measuring, displaying (plasma display), and recording (chart recorder) the parameter's trend information.

ACTION:

.....NOTE.....

This note clarifies the application of the AOT for multiple, inoperable instruments. The actions of this specification may be entered independently for each item listed under the heading INSTRUMENT in Table 3.3-10. The AOT of the inoperable channels will be tracked separately for each instrument starting at the time the action was entered for that instrument.

.....

a. Action a. applies when an instrument has one or more inoperable channels but the minimum channels operable requirement is met. The 30-day allowed outage time (AOT) takes into account the remaining operable channels, the passive nature of the instruments (no critical automatic action is assumed to occur from these instruments), and the low probability of an event requiring PAM instrumentation during this interval.

If the inoperable channels are not restored within 30 days, the action requires submittal of a written report to the NRC within the next 14 days. The report discusses the cause of the inoperability, alternative actions, and the plans and schedule for restorative actions. Submitting a report in lieu of a plant shut down is appropriate since the report identifies a preplanned method of monitoring and the likelihood of plant conditions that would require information provided by this instrumentation is low.

3/4.3.3.6 ACCIDENT MONITORING INSTRUMENTATION (Continued)

ACTION:

b. Action b. applies when an instrument has less than the required minimum number of operable channels. The 7-day AOT is based on the relatively low probability of an event requiring PAM instrumentation and the availability of alternate means (non-Regulatory Guide 1.97 instruments) to monitor the parameter. Continuous operation with less than the minimum required channels is not acceptable because alternate indication may not fully meet the performance qualifications applied to PAM instrumentation.

c. Action c. applies to the containment post-LOCA high range area radiation monitor when less than the minimum required channels are operable. Seventy-two hours is permitted to initiate the alternate method of monitoring for the post-LOCA monitor. If the monitor is not restored to operable status within the 7-day AOT, a report that discusses the actions taken, the cause of the inoperability, and the plans and schedule for restoring the instruments to operable status must be submitted to the NRC within 14 days.

3/4.3.3.7 (THIS SPECIFICATION NUMBER IS NOT USED)

3/4.3.3.8 (THIS SPECIFICATION NUMBER IS NOT USED)

3/4.3.3.9 (THIS SPECIFICATION NUMBER IS NOT USED)

3/4.3.3.10 EXPLOSIVE GAS MONITORING INSTRUMENTATION

The explosive gas instrumentation is provided to monitor and control, the concentrations of potentially explosive gas mixtures in the WASTE GAS HOLDUP SYSTEM. The OPERABILITY and use of this instrumentation is consistent with the requirements of General Design Criteria 60, 63, and 64 of Appendix A to 10 CFR Part 50.

3/4.3.4 (THIS SPECIFICATION NUMBER IS NOT USED)

3/4.4.1 REACTOR COOLANT LOOPS AND COOLANT CIRCULATION

A reactor coolant loop is comprised of its associated steam generator and reactor coolant pump. An OPERABLE reactor coolant system loop consists of an OPERABLE reactor coolant pump and an OPERABLE steam generator in accordance with the Steam Generator Tube Surveillance Program.

The plant is designed to operate with all reactor coolant loops in operation and maintain DNBR above 1.30 during all normal operations and anticipated transients. In MODES 1 and 2 with one reactor coolant loop not in operation, this specification requires that the plant be in at least HOT STANDBY within 6 hours.

In MODE 3, two reactor coolant loops provide sufficient heat removal capability for removing core decay heat even in the event of a bank withdrawal accident; however, a single reactor coolant loop provides sufficient heat removal capacity if a bank withdrawal accident can be prevented, i.e., by placing the Control Rod Drive System in a condition incapable of rod withdrawal. Single failure considerations require that two loops be OPERABLE at all times.

In MODE 4, and in MODE 5 with reactor coolant loops filled, a single reactor coolant loop or RHR loop provides sufficient heat removal capability for removing decay heat; but single failure considerations require that at least two loops (either RHR or RCS) be OPERABLE.

In MODE 5 with reactor coolant loops not filled, a single RHR loop provides sufficient heat removal capability for removing decay heat; but single failure considerations, and the unavailability of the steam generators as a heat removing component, require that at least two RHR loops be OPERABLE.

A Reactor Coolant "loops filled" condition is defined as follows: (1) Having pressurizer level greater than or equal to 55% if the pressurizer does not have a bubble, and greater than or equal to 17% when there is a bubble in the pressurizer. (2) Having the air and non-condensables evacuated from the Reactor Coolant System by either operating each reactor coolant pump for a short duration to sweep air from the Steam Generator U-tubes into the upper head area of the reactor vessel, or removing the air from the Reactor Coolant System via an RCS evacuation skid, and (3) Having vented the upper head area of the reactor vessel if the pressurizer does not have a bubble. (4) Having the Reactor Coolant System not vented, or if vented capable of isolating the vent paths within the time to boil.

The operation of one reactor coolant pump (RCP) or one RHR pump provides adequate flow to ensure mixing, prevent stratification and produce gradual reactivity changes during boron concentration reductions in the Reactor Coolant System. The reactivity change rate associated with boron reduction will, therefore, be within the capability of operator recognition and control.

The restrictions on starting an RCP in MODES 4 and 5 are provided to prevent RCS pressure transients, caused by energy additions from the Secondary Coolant System, which could exceed the limits of Appendix G to 10 CFR Part 50. The RCS will be protected against overpressure transients and will not exceed the limits of Appendix G by restricting starting of the RCPs to when the secondary water temperature of each steam generator is less than 50°F above each of the RCS cold-leg temperatures.

3/4.4.2 SAFETY VALVES

The pressurizer Code safety valves operate to prevent the RCS from being pressurized above its Safety Limit of 2735 psig. Each safety valve is designed to relieve 420,000 lbs per hour of saturated steam at the valve Setpoint. The relief capacity of a single safety valve is adequate to relieve any overpressure condition which could occur during shutdown.

In the event that no safety valves are OPERABLE in MODE 4 or 5, the action statement requires immediately suspending positive reactivity changes and placing an RHR loop in operation in the shutdown cooling mode. An operating RHR loop, connected to the RCS, provides overpressure relief capability and will prevent RCS overpressurization. In addition, the Overpressure Protection System provides a diverse means of protection against RCS overpressurization at low temperatures. Operations that individually add limited, positive reactivity are acceptable when, combined with other actions that add negative reactivity, the overall net reactivity addition is zero or negative. For example, a positive reactivity addition caused by temperature fluctuations from inventory addition or temperature control fluctuations is acceptable if it is combined with a negative reactivity addition such that the overall, net reactivity addition is zero or negative.

3/4.4.2 SAFETY VALVES (Continued)

During plant operations in Mode 5, it is conservative and consistent with Technical Specifications that the OPERABLE pressurizer safety valve may be removed from its flange and continue to meet the intent of this Specification. The removal of the pressurizer safety valve will afford the reactor coolant system equivalent or superior protection as an overpressure device. This will also allow the removal of the three pressurizer safety valves to be used as a gravity vent path in place of removing the pressurizer manway when the plant is at reduced inventory conditions.

During operation, all pressurizer Code safety valves must be OPERABLE to prevent the RCS from being pressurized above its Safety Limit of 2735 psig. The combined relief capacity of all of these valves is greater than the maximum surge rate resulting from a complete loss of load assuming no Reactor trip until the first Reactor Trip System Trip Setpoint is reached (i.e., no credit is taken for a direct Reactor trip on the loss of load) and also assuming no operation of the power-operated relief valves or steam dump valves.

Demonstration of the safety valves' lift settings will be performed when removed from the reactor coolant system in accordance with the provisions of the ASME Code for Operation and Maintenance of Nuclear Power Plants.

3/4.4.3 PRESSURIZER

The limit on the maximum water volume in the pressurizer assures that the parameter is maintained within the normal steady-state envelope of operation assumed in the SAR. The limit is consistent with the initial SAR assumptions. The 12-hour periodic surveillance is sufficient to ensure that the parameter is restored to within its limit following expected transient operation. The maximum water volume also ensures that a steam bubble is formed and thus the RCS is not a hydraulically solid system. The requirement that a minimum number of pressurizer heaters be OPERABLE enhances the capability of the plant to control Reactor Coolant System pressure and establish natural circulation.

3/4.4.4 RELIEF VALVES

The power-operated relief valves (PORVs) and steam bubble function to relieve RCS pressure during all design transients up to and including the design step load decrease with steam dump. Operation of the PORVs minimizes the undesirable opening of the spring-loaded pressurizer Code safety valves. Each PORV has a remotely operated block valve to provide a positive shutoff capability should a relief valve become inoperable. The PORVs and their associated block valves are powered from Class 1E power supply busses.

3/4.4.4 RELIEF VALVES (Continued)

The PORVs are equipped with automatic actuation circuitry and manual control capability. The PORVs are considered OPERABLE in either the automatic or manual mode for the following reasons:

(1) No credit is taken in any FSAR accident analysis for automatic PORV actuation to mitigate the consequences of an accident.

(2) No Surveillance Requirement (ACOT or TADOT) exists for verifying automatic operation.

(3) The required ACTION for an inoperable PORV(s) (closing the block valve) conflicts with any presumed requirement for automatic actuation.

3/4.4.5 STEAM GENERATORS

The Surveillance Requirements for inspection of the steam generator tubes ensure that the structural integrity of this portion of the RCS will be maintained. The program for inservice inspection of steam generator tubes is based on a modification of Regulatory Guide 1.83, Revision 1. Inservice inspection of steam generator tubing is essential in order to maintain surveillance of the conditions of the tubes in the event that there is evidence of mechanical damage or progressive degradation due to design, manufacturing errors, or inservice conditions that lead to corrosion. Inservice inspection of steam generator tubing also provides a means of characterizing the nature and cause of any tube degradation, so that corrective measures can be taken.

3/4.4.5 STEAM GENERATORS (Continued)

The plant is expected to be operated in a manner such that the secondary coolant will be maintained within those chemistry limits found to result in negligible corrosion of the steam generator tubes. If the secondary coolant chemistry is not maintained within these limits, localized corrosion may likely result in stress corrosion cracking. The extent of cracking during plant operation would be limited by the limitation of steam generator tube leakage between the Reactor Coolant System and the Secondary Coolant System (reactor-to-secondary leakage = 500 gallons per day per steam generator). Cracks having a reactor-to-secondary leakage less than this limit during operation will have an adequate margin of safety to withstand the loads imposed during normal operation and by postulated accidents. Operating plants have demonstrated that reactor-to-secondary leakage of 500 gallons per day per steam generator can readily be detected by radiation monitors of steam generator blowdown. Leakage in excess of this limit will require plant shutdown and an unscheduled inspection, during which the leaking tubes will be located and plugged.

Wastage-type defects are unlikely with proper chemistry treatment of the secondary coolant. However, even if a defect should develop in service, it will be found during scheduled inservice steam generator tube examinations. Plugging will be required for all tubes with imperfections exceeding the plugging limit of 40% of the tube nominal wall thickness. Steam generator tube inspections of operating plants have demonstrated the capability to reliably detect degradation that has penetrated 20% of the original tube wall thickness.

Whenever the results of any steam generator tubing inservice inspection fall into Category C-3, these results will be promptly reported to the Commission in a Special Report pursuant to Specification 6.8.2 within 30 days and prior to resumption of plant operation. Such cases will be considered by the Commission on a case-by-case basis and may result in a requirement for analysis, laboratory examinations, tests, additional eddy-current inspection, and revision of the Technical Specifications, if necessary.

3/4.4.6 REACTOR COOLANT SYSTEM LEAKAGE

3/4.4.6.1 LEAKAGE DETECTION SYSTEMS

The RCS Leakage Detection Systems required by this specification are provided to monitor and detect leakage from the reactor coolant pressure boundary. These Detection Systems are consistent with the recommendations of Regulatory Guide 1.45, "Reactor Coolant Pressure Boundary Leakage Detection Systems," May 1973.

3/4.4.6.2 OPERATIONAL-LEAKAGE

PRESSURE BOUNDARY LEAKAGE of any magnitude is unacceptable since it may be indicative of an impending gross failure of the pressure boundary. Therefore, the presence of any PRESSURE BOUNDARY LEAKAGE requires the unit to be promptly placed in COLD SHUTDOWN.

REACTOR COOLANT SYSTEM LEAKAGE

3/4.4.6.2 OPERATIONAL LEAKAGE (Continued)

The safety significance of RCS leakage varies depending on the source, rate, and duration of the leak; therefore, detection and monitoring of RCS leakage are necessary. In addition, a means of separating the identified from the unidentified leakage is necessary to permit the operators to take prompt corrective action in the event of a leak that is detrimental to the safety of the facility.

Unidentified Leakage

Uncollected leakage to the containment atmosphere, which is ultimately collected in the containment drainage sumps where the leak rate can be established and monitored, is unidentified leakage. Unidentified leakage to the containment atmosphere is kept to a minimum (normal leakage is estimated to range from 20 to 40 gallons per day) to permit the leakage detection system to detect positively and rapidly a small increase in leakage. Identified leakage and unidentified leakage are separated so that a small unidentified leak will not be masked by larger, acceptable identified leakage. The one-gallon per minute limit on unidentified leakage is a reasonable, minimum detectable amount that the leakage detection system can detect in a reasonable time period.

Identified Leakage

A limited amount of leakage is expected from auxiliary systems inside containment that cannot practically be made 100% leak tight. Identified leakage, which consists of collectable, detectable, leakage from specifically known and located sources, does not interfere with the ability of the leakage detection system to detect unidentified leakage. Identified leakage is monitored separately from unidentified leakage. Up to 10 gpm of identified leakage is acceptable because the leakage is from known sources that will not mask a small, unidentified leak and is well within the capability of the RCS make up system.

Primary to Secondary Leakage

The total steam generator tube leakage limit of 1 gpm for all steam generators not isolated from the RCS ensures that the dosage contribution from the tube leakage will be limited to a small fraction of 10 CFR Part 100 dose guideline values in the event of either a steam generator tube rupture or steam line break. The 1 gpm limit is consistent with the assumptions used in the analysis of these accidents. The 500 gpd leakage limit per steam generator ensures that steam generator tube integrity is maintained in the event of a main steam line rupture or under LOCA conditions.

REACTOR COOLANT SYSTEM LEAKAGE

3/4.4.6.2 OPERATIONAL LEAKAGE (Continued)

Controlled Leakage

The CONTROLLED LEAKAGE limitation restricts operation when the total flow supplied to the reactor coolant pump seals exceeds 40 gpm with the modulating valve in the supply line fully open at a nominal RCS pressure of 2235 psig. This limitation ensures that in the event of a LOCA, the safety injection flow will not be less than assumed in the safety analyses.

Pressure Isolation Valve Leakage

The specified allowed leakage from any RCS pressure isolation valve is sufficiently low to ensure early detection of possible in-series check valve failure. It is apparent that when pressure isolation is provided by two in-series check valves and when failure of one valve in the pair can go undetected for a substantial length of time, verification of valve integrity is required. Since these valves are important in preventing over-pressurization and rupture of the ECCS low pressure piping which could result in a LOCA that bypasses containment, these valves should be tested periodically to ensure low probability of gross failure.

The Surveillance Requirements for RCS pressure isolation valves provide added assurance of valve integrity thereby reducing the probability of gross valve failure and consequent intersystem LOCA. RCS Pressure Isolation Valve (PIV) Leakage measures leakage through each individual PIV and can impact this LCO. Of the two PIVs in series in each isolated line, leakage measured through one PIV does not result in RCS leakage when the other is leak tight. If both valves leak and result in a loss of mass from the RCS, the loss must be included in the allowable IDENTIFIED LEAKAGE.

3/4.4.7 (THIS SPECIFICATION NUMBER IS NOT USED)

3/4.4.8 SPECIFIC ACTIVITY

The limitations on the specific activity of the reactor coolant ensure that the resulting 2-hour doses at the SITE BOUNDARY will not exceed an appropriately small fraction of 10 CFR Part 100 dose guideline values following a steam generator tube rupture accident in conjunction with an assumed steady-state reactor-to-secondary steam generator leakage rate of 1 gpm. The values for the limits on specific activity represent limits based upon a parametric evaluation by the NRC of typical site locations. These values are conservative in that specific site parameters of the Seabrook site, such as SITE BOUNDARY location and meteorological conditions, were not considered in this evaluation.

3/4.4.8 SPECIFIC ACTIVITY (Continued)

The sample analysis for determining the gross specific activity and Ē can exclude the radioiodines because of the low reactor coolant limit of 1 microCurie/gram DOSE EQUIVALENT I-131, and because, if the limit is exceeded, the radioiodine level is to be determined every 4 hours. If the gross specific activity level and radioiodine level in the reactor coolant were at their limits, the radioiodine contribution would be approximately 1%. In a release of reactor coolant with a typical mixture of radioactivity, the actual radioiodine contribution would probably be about 20%. The exclusion of radionuclides with half-lives less than 10 minutes from these determinations has been made for several reasons. The first consideration is the difficulty to identify short-lived radionuclides in a sample that requires a significant time to collect, transport, and analyze. The second consideration is the predictable delay time between the postulated release of radioactivity from the reactor coolant to its release to the environment and transport to the SITE BOUNDARY, which is relatable to at least 30 minutes' decay time. The choice of 10 minutes for the half-life cutoff was made because of the nuclear characteristics of the typical reactor coolant radioactivity. The radionuclides in the typical reactor coolant have half-lives of less than 4 minutes or half-lives of greater than 14 minutes, which allows a distinction between the radionuclides above and below a half-life of 10 minutes. For these reasons the radionuclides that are excluded from consideration are expected to decay to very low levels before they could be transported from the reactor coolant to the SITE BOUNDARY under any accident condition.

Reducing T_{avg} to less than 500°F prevents the release of activity should a steam generator tube rupture, since the saturation pressure of the reactor coolant is below the lift pressure of the atmospheric steam relief valves. The Surveillance Requirements provide adequate assurance that excessive specific activity levels in the reactor coolant will be detected in sufficient time to take corrective action. A reduction in frequency of isotopic analyses following power changes may be permissible if justified by the data obtained.

3/4.4.9 PRESSURE/TEMPERATURE LIMITS

The temperature and pressure changes during heatup and cooldown are limited to be consistent with the requirements given in the ASME Boiler and Pressure Vessel Code, Section XI, Appendix G, Reference (1):

1. The reactor coolant temperature and pressure and system heatup and cooldown rates (with the exception of the pressurizer) shall be limited in accordance with Figures 3.4-2 and 3.4-3 for the service period specified thereon:

   a. Allowable combinations of pressure and temperature for specific temperature change rates are below and to the right of the limit lines shown. Limit lines for cooldown rates between those presented may be obtained by interpolation; and

   b. Figures 3.4-2 and 3.4-3 define limits to assure prevention of non-ductile failure only. For normal operation, other inherent plant characteristics, e.g., pump heat addition and pressurizer heater capacity, may limit the heatup and cooldown rates that can be achieved over certain pressure-temperature ranges.

2. These limit lines shall be calculated periodically using methods provided below,

3. The secondary side of the steam generator must not be pressurized above 200 psig if the temperature of the steam generator is below 70°F,

4. The pressurizer heatup and cooldown rates shall not exceed 100°F/h and 200°F/h, respectively. The spray shall not be used if the temperature difference between the pressurizer and the spray fluid is greater than 320°F, and

5. System preservice hydrotests and inservice leak and hydrotests shall be performed at pressures in accordance with the requirements of ASME Boiler and Pressure Vessel Code, Section XI.

Operation within the limits of the appropriate heatup and cooldown curves assures the integrity of the reactor vessel's ferritic material against fracture induced by combined thermal and pressure stresses. As the reactor vessel is subjected to increasing fluence, the toughness of the limiting beltline region material continues to diminish, and consequently, even more restrictive pressure/temperature (P/T) limits must be maintained. Each P/T limit curve defines an acceptable region for normal operation during heatup or cooldown maneuvering as pressure and temperature indications are monitored to ensure that operation is within the allowable region. A heatup or cooldown is defined as a temperature change of greater than or equal to 10°F in any one-hour period.

3/4.4.9 PRESSURE/TEMPERATURE LIMITS (Continued)

The P/T limits have been established in accordance with the requirements of ASME Boiler and Pressure Vessel Code Section XI, Appendix G, as modified by ASME Code Case N-641, Reference (2), and the additional requirements of 10CFR50 Appendix G, Reference (3). The heatup and cooldown P/T limit curves for normal operation, Figures 3.4-2 and 3.4-3 respectively, are valid for a service period of 20 effective full power years (EFPY). The technical justification and methodologies utilized in their development are documented in WCAP-15745, Reference (4). The P/T curves were generated based on the latest available reactor vessel information and latest calculated fluences.

Heatup and Cooldown limit curves are calculated using the adjusted RT_{NDT} (reference nil-ductility temperature) corresponding to the limiting beltline region material of the reactor vessel. The adjusted RT_{NDT} of the limiting material in the core region of the reactor vessel is determined by using the unirradiated reactor vessel material fracture toughness properties, estimating the radiation-induced ΔRT_{NDT}, and adding a margin. RT_{NDT} increases as the material is exposed to fast-neutron radiation. Therefore, to find the most limiting RT_{NDT} at any time period in the reactor's life, ΔRT_{NDT} due to the radiation exposure associated with that time period must be added to the unirradiated RT_{NDT} (IRT_{NDT}). The extent of the shift in RT_{NDT} is enhanced by certain chemical elements (such as copper and nickel) present in reactor vessel steels. The Nuclear Regulatory Commission (NRC) has published a method for predicting radiation embrittlement in Regulatory Guide 1.99, Revision 2, Reference (5). Regulatory Guide 1.99, Revision 2, is used for the calculation of Adjusted Reference Temperature (ART) values (IRT_{NDT} + ΔRT_{NDT} + margins for uncertainties) at the 1/4T and 3/4T locations, where T is the thickness of the vessel at the beltline region.

The reactor vessel materials have been tested to determine their initial RT_{NDT}. Reactor operation and resultant fast neutron (E greater than 1 MeV) irradiation can cause an increase in the RT_{NDT}. Therefore, an adjusted reference temperature, based upon the fluence, best estimate copper and nickel content of the limiting beltline material, can be predicted using surveillance capsule data and the value of ΔRT_{NDT} computed by Regulatory Guide 1.99, Revision 2. Surveillance capsule data, documented in Reference (6), is available for two capsules (Capsules U and Y) having already been removed from the reactor vessel. This surveillance capsule data was used to calculate chemistry factor (CF) values per Position 2.1 of Regulatory Guide 1.99, Revision 2. It also noted that Reference (6) concluded that all the surveillance data was credible as the beltline material was behaving as empirically predicted. The heatup and cooldown limit curves of Figures 3.4-2 and 3.4-3 include predicted adjustments for this shift in RT_{NDT} at the end of 20 EFPY as well as adjustments for possible errors in the pressure and temperature sensing instruments.

3/4.4.9 PRESSURE/TEMPERATURE LIMITS (Continued)

The results from the material surveillance program were evaluated according to ASTM E185. Capsules U and Y were removed in accordance with the requirements of ASTM E185-73 and 10CFR50, Appendix H. The lead factor represents the relationship between the fast neutron flux density at the location of the capsule and the inner wall of the reactor vessel. Therefore, the results obtained from the surveillance specimens were used to predict future radiation damage to the reactor vessel material by using the lead factor and the withdrawal time of the capsule. The fluence values used to determine the CFs are the calculated fluence values at the surveillance capsule locations. The calculated fluence values were used for all cases. All calculated fluence values (capsule and projections) are documented in Reference (6). These fluences were calculated using the ENDF/B-VI scattering cross-section data set. The measured ΔRT_{NDT} values for the weld data were adjusted for chemistry using the ratio procedure given in Position 2.1 of Regulatory Guide 1.99, Revision 2.

FIGURE B 3/4.4-1

(THIS FIGURE NUMBER IS NOT USED)

This page intentionally left blank

TABLE B 3/4.4-1

(THIS TABLE NUMBER IS NOT USED)

3/4.4.9 PRESSURE/TEMPERATURE LIMITS (Continued)

The ASME approach for calculating the allowable limit curves for various heatup and cooldown rates specifies that the total stress intensity factor, K_I, for the combined thermal and pressure stresses at any time during heatup or cooldown cannot be greater than the reference stress intensity factor, K_{Ic}, for the metal temperature at that time. K_{Ic} is obtained from the reference fracture toughness curve, defined in Code Case N-641, Reference (2). The K_{Ic} curve is given by the following equation:

$$K_{Ic} = 33.2 + 20.734 * e^{[0.02(T - RT_{NDT})]} \quad (1)$$

where,

K_{Ic} = reference stress intensity factor as a function of the metal temperature T and the metal reference nil-ductility temperature RT_{NDT}

This K_{Ic} curve is based on the lower bound of static critical K_I values measured as a function of temperature on specimens of SA-533 Grade B Class 1, SA-508-1, SA-508-2, and SA-508-3 steel.

The governing equation for the heatup-cooldown analysis is defined in Appendix G of the ASME Code as follows:

$$C^* K_{Im} + K_{It} < K_{Ic} \quad (2)$$

where,

K_{Im} = stress intensity factor caused by membrane (pressure) stress

K_{It} = stress intensity factor caused by the thermal gradients

K_{Ic} = function of temperature relative to the RT_{NDT} of the material

C = 2.0 for Level A and Level B service limits

C = 1.5 for hydrostatic and leak test conditions during which the reactor core is not critical

At any time during the heatup or cooldown transient, K_{Ic} is determined by the metal temperature at the tip of a postulated flaw at the 1/4T and 3/4T location, the appropriate value for RT_{NDT}, and the reference fracture toughness curve. The thermal stresses resulting from the temperature gradients through the vessel wall are calculated and then the corresponding (thermal) stress intensity factors, K_{It}, for the reference flaw are computed. From Equation 2, the pressure stress intensity factors are obtained and, from these, the allowable pressures are calculated.

3/4.4.9 PRESSURE/TEMPERATURE LIMITS (Continued)

COOLDOWN

For the calculation of the allowable pressure versus coolant temperature during cooldown, the reference flaw of Appendix G to the ASME Code is assumed to exist at the inside of the vessel wall. During cooldown, the controlling location of the flaw is always at the inside of the wall because the thermal gradients produce tensile stresses at the inside, which increase with increasing cooldown rates. Allowable pressure-temperature relations are generated for both steady-state and finite cooldown rate situations. From these relations, composite limit curves are constructed for each cooldown rate of interest.

The use of the composite curve in the cooldown analysis is necessary because control of the cooldown procedure is based on measurement of reactor coolant temperature, whereas the limiting pressure is actually dependent on the material temperature at the tip of the assumed flaw. During cooldown, the 1/4T vessel location is at a higher temperature than the fluid adjacent to the vessel ID. This condition, of course, is not true for the steady-state situation. It follows that at any given reactor coolant temperature, the ΔT developed during cooldown results in a higher value of K_{Ic} at the 1/4T location for finite cooldown rates than for steady-state operation. Furthermore, if conditions exist such that the increase in K_{Ic} exceeds K_{It}, the calculated allowable pressure during cooldown will be greater than the steady-state value.

The above procedures are needed because there is no direct control on temperature at the 1/4T location; therefore, allowable pressures may unknowingly be violated if the rate of cooling is decreased at various intervals along a cooldown ramp. The use of the composite curve eliminates this problem and assures conservative operation of the system for the entire cooldown period.

HEATUP

Three separate calculations are required to determine the limit curves for finite heatup rates. As is done in the cooldown analysis, allowable pressure-temperature relationships are developed for steady-state conditions as well as finite heatup rate conditions assuming the presence of a 1/4T defect at the inside of the vessel wall. The heatup results in compressive stresses at the inside surface of the wall that alleviate the tensile stresses produced by internal pressure. The metal temperature at the crack tip lags the coolant temperature; therefore, the K_{Ic} for the 1/4T crack during heatup is lower than the K_{Ic} for the 1/4T crack during steady-state conditions at the same coolant temperature.

3/4.4.9 PRESSURE/TEMPERATURE LIMITS (Continued)

HEATUP (Continued)

During heatup, especially at the end of the transient, conditions may exist such that the effects of compressive thermal stresses and lower K_{Ic} values for steady-state and finite heatup rates do not offset each other and the pressure-temperature curve based on steady-state conditions no longer represents a lower bound of all similar curves for finite heatup rates when the 1/4T flaw is considered. Therefore, both cases have to be analyzed in order to assure that at any coolant temperature the lower value of the allowable pressure calculated for steady-state and finite heatup rates is obtained.

The second portion of the heatup analysis concerns the calculation of pressure-temperature limitations for the case in which a 1/4T flaw located at the 1/4T location from the outside surface is assumed. Unlike the situation at the vessel inside surface, the thermal gradients established at the outside surface during heatup produce stresses which are tensile in nature and thus tend to reinforce any pressure stresses present. These thermal stresses are dependent on both the rate of heatup and the time (or coolant temperature) along the heatup ramp. Since the thermal stresses at the outside are tensile and increase with increasing heatup rate, a lower bound curve cannot be defined. Rather, each heatup rate of interest must be analyzed on an individual basis.

Following the generation of pressure-temperature curves for both the steady-state and finite heatup rate situations, the final limit curves are produced as follows. A composite curve is constructed based on a point-by-point comparison of the steady-state and finite heatup rate data. At any given temperature, the allowable pressure is taken to be the lesser of the three values taken from the curves under consideration. The use of the composite curve is necessary to set conservative heatup limitations because it is possible for conditions to exist wherein, over the course of the heatup ramp, the controlling condition switches from the inside to the outside and the pressure limit must at all times be based on analysis of the most critical criterion.

Finally, the composite curves for the heatup rate data and the cooldown rate data are adjusted for possible errors in the pressure and temperature sensing instruments by the values indicated on the respective curves.

3/4.4.9 PRESSURE/TEMPERATURE LIMITS (Continued)

HEATUP (Continued)

10 CFR Part 50, Appendix G, Reference (3), addresses the metal temperature of the closure head flange and vessel flange regions. This rule states that the metal temperature of the closure flange regions must exceed the material unirradiated RT_{NDT} by at least 120°F for normal operation when the pressure exceeds 20 percent of the preservice hydrostatic test pressure (3106 psi), which in this case is 621 psig. The limiting unirradiated RT_{NDT} of 30°F occurs in the vessel flange of the reactor vessel, consequently the minimum allowable temperature of this region is 150°F at pressures greater than 621 psig. This limit is shown as the horizontal lines in Figures 3.4-2 and 3.4-3. (NOTE: Figures 3.4-2 and 3.4-3 include a compensation of 20°F and 100 psig for possible instrument errors.)

Although the pressurizer operates in temperature ranges above those for which there is reason for concern of nonductile failure, operating limits are provided to assure compatibility of operation with the fatigue analysis performed in accordance with the ASME Code requirements.

References

1. ASME Boiler and Pressure Vessel Code, Section XI, Appendix G, "Fracture Toughness Criteria for Protection Against Failure", dated December 1995, through 1996 Addendum.

2. ASME Boiler and Pressure Vessel Code Case N-641, Section XI, Division 1, "Alternative Pressure-Temperature Relationship and Overpressure Protection System Requirements", dated January 17, 2000.

3. 10 CFR Part 50, Appendix G, "Fracture Toughness Requirements", U.S. Nuclear Regulatory Commission, Federal Register, Volume 60, No. 243, dated December 19, 1995.

4. Westinghouse WCAP-15745, Revision 0, "Seabrook Unit 1 Heatup and Cooldown Limit Curves for Normal Operation", dated December 2001.

5. Regulatory Guide 1.99, Revision 2, "Radiation Embrittlement of Reactor Vessel Materials", U. S. Nuclear Regulatory Commission, dated May 1988.

6. Duke Engineering and Services Report DES-NFQA-98-01, Revision 0, "Analysis of Seabrook Station Unit I Reactor Vessel Surveillance Capsules U and Y", dated May 1998.

3/4.4.9 PRESSURE/TEMPERATURE LIMITS (Continued)

COLD OVERPRESSURE PROTECTION (Continued)

The OPERABILITY of two PORVs, or two RHR suction relief valves, or a combination of a PORV and RHR suction relief valve, or an RCS vent opening of at least 1.58 square inches ensures that the RCS will be protected from pressure transients which could exceed the limits of Appendix G to 10 CFR Part 50 when one or more of the RCS cold legs are less than or equal to 290°F. Either PORV or either RHR suction relief valve has adequate relieving capability to protect the RCS from overpressurization when the transient is limited to either: (1) the start of an idle RCP with the secondary water temperature of the steam generator less than or equal to 50°F above the RCS cold leg temperatures, or (2) the start of a centrifugal charging pump and its injection into a water-solid RCS.

The Maximum Allowed PORV Setpoint for the Cold Overpressure Mitigation System (COMS) is derived by analysis which models the performance of the COMS assuming various mass input and heat input transients. Operation with a PORV Setpoint less than or equal to the maximum Setpoint ensures that Appendix G criteria will not be violated with consideration for: (1) a maximum pressure overshoot beyond the PORV Setpoint which can occur as a result of time delays in signal processing and valve opening; (2) a 50°F heat transport effect made possible by the geometrical relationship of the RHR suction line and the RCS wide range temperature indicator used for COMS; (3) instrument uncertainties; and (4) single failure. To ensure mass and heat input transients more severe than those assumed cannot occur, Technical Specifications require both Safety injection pumps and all but one centrifugal charging pump to be made inoperable while in MODES 4, 5, and 6 with the reactor vessel head installed and not fully detensioned, and disallow start of an RCP if secondary coolant temperature is more than 50°F above reactor coolant temperature. Exceptions to these requirements are acceptable as described below.

Operation above 350°F but less than 375°F with only one centrifugal charging pump OPERABLE and no Safety Injection pumps OPERABLE is allowed for up to 4 hours. As shown by analysis, LOCAs occurring at low temperature, low pressure conditions can be successfully mitigated by the operation of a single centrifugal charging pump and a single RHR pump with no credit for accumulator injection. Given the short time duration and the condition of having only one centrifugal charging pump OPERABLE and the probability of a LOCA occurring during this time, the failure of the single centrifugal charging pump is not assumed.

Operation below 350°F but greater than 325°F with all centrifugal charging and Safety Injection pumps OPERABLE is allowed for up to 4 hours. During low pressure, low temperature operation all automatic Safety Injection actuation signals except Containment Pressure-High are blocked. In normal conditions, a single failure of the

3/4.4.9 PRESSURE/TEMPERATURE LIMITS (Continued)

COLD OVERPRESSURE PROTECTION (Continued)

ESF actuation circuitry will result in the starting of at most one train of Safety Injection (one centrifugal charging pump, and one Safety Injection pump). For temperatures above 325°F, an overpressure event occurring as a result of starting two pumps can be successfully mitigated by operation of both PORVs without exceeding Appendix G limit. A single failure of a PORV is not assumed due to the short duration that this condition is allowed and the low probability of an event occurring during this interval in conjunction with the failure of a PORV to open. Initiation of both trains of Safety Injection during this 4-hour time frame due to operator error or a single failure occurring during testing of a redundant channel are not considered to be credible accidents.

Operation with all centrifugal charging pumps and both Safety Injection pumps OPERABLE is acceptable when RCS temperature is greater than 350°F, a single PORV has sufficient capacity to relieve the combined flow rate of all pumps. Above 350°F two RCPs and all pressure safety valves are required to be OPERABLE. Operation of an RCP eliminates the possibility of a 50°F difference existing between indicated and actual RCS temperature as a result of heat transport effects. Considering instrument uncertainties only, an indicated RCS temperature of 350°F is sufficiently high to allow full RCS pressurization in accordance with Appendix G limitations. Should an overpressure event occur in these conditions, the pressurizer safety valves provide acceptable and redundant overpressure protection.

When operating below 200°F in MODE 5 or MODE 6 with the reactor vessel head on and the vessel head closure bolts not fully detensioned, Technical Specification 3.5.3.2 allows one Safety Injection pump to be made OPERABLE whenever the RCS has a vent area equal to or greater than 18 square inches or whenever the RCS is in a reduced inventory condition, i.e., whenever reactor vessel water level is lower than 36 inches below the reactor vessel flange. Cold overpressure protection provided by the venting method utilizes an 18 square inch or greater mechanical opening in the RCS pressure boundary. This mechanical opening is larger in size than the 1.58 square inch opening required for normal overpressure protection and is of sufficient size to ensure that the Appendix G limits are not exceeded when an SI pump is operating in MODE 5 or MODE 6 with the reactor vessel head on and the vessel head closure bolts not fully detensioned. When the reactor has been shut down for at least 7 days, the larger vent area also enhances the ability to provide a gravity feed to the RCS from the Refueling Water Storage Tank in the unlikely event that the CCP and SI pumps were unavailable after a loss of RHR. Additionally, when steam generator nozzle dams are installed for maintenance purposes and the reactor vessel water level is not in a reduced inventory condition, the larger vent area limits RCS pressure during overpressure transients to reduce the possibility of adversely affecting steam generator nozzle dams.

3/4.4.9 PRESSURE/TEMPERATURE LIMITS (Continued)

COLD OVERPRESSURE PROTECTION (Continued)

When the reactor vessel head is on and the vessel head closure bolts are fully detensioned, i.e., when the closure nuts have been removed from the studs, a substantial vent area exists by the gap underneath the reactor vessel head, created by the internal spring forces. A measured gap of greater than or equal to 0.03 inches is of sufficient size to provide for cold overpressure protection, for gravity feed from the RWST, and ensuring nozzle dam integrity. Verification of sufficient gap will be performed prior to crediting the gap as a means for cold overpressure protection.

Cold overpressure protection can also be provided when operating at a reduced inventory condition, i.e., whenever reactor vessel water level is lower than 36 inches below the reactor vessel flange. With RCS water level lower than 36 inches below the RV flange in Mode 5 or Mode 6 with the RV head on and the closure bolts not fully detensioned, a mass addition transient involving simultaneous operation of a CCP and a SI pump without letdown will not result in a cold overpressurization condition because of the relatively large void volume in the RCS. This void volume consists of the upper plenum of the reactor vessel and the RV head, the pressurizer and steam generator tubes, as a minimum. The relatively large void volume affords ample time for operator action, (e.g., diagnose the water level increase on main control board instrumentation and stopping the pumps) to mitigate the transient. A minimum time of 50 minutes has been determined based on one charging pump operating at 120 gpm without letdown and a Safety Injection pump injecting into the RCS.

The charging pumps and Safety Injection pumps are rendered incapable of injecting into the RCS through removing the power from the pumps by racking the motor circuit breakers out under administrative control. An alternate method of preventing cold overpressurization may be employed. The alternate method uses at least two independent means to prevent cold overpressurization such that a single action will not result in an inadvertent injection into the RCS. This may be accomplished through the pump control switch being placed in Pull-to-Lock position and at least one valve in the discharge flow path closed. The alternate method provides the ability to respond to abnormal situations, expeditiously, from the main control room.

During charging pump swap operation two charging pumps may be made capable of injecting into the RCS for up to 1 hour. This provision prevents securing charging for the purpose of not having more than the allowable pumps operable in order to limit thermal fatigue cycles on piping and impact seal injection to the Reactor Coolant Pumps (RCP) which has seal degradation potential. Given the short time duration of the evolution and the evolution controlled under administrative controls, e.g., prohibiting pump swap operation during RCS water-solid conditions, a cold overpressurization condition occurring as a result of an uncontrolled mass addition transient is unlikely.

3/4.4.9 PRESSURE/TEMPERATURE LIMITS (Continued)

COLD OVERPRESSURE PROTECTION (Continued)

Charging and/or Safety Injection pumps, normally rendered inoperable for cold overpressure protection may be operated as required under administrative controls during abnormal situations involving a loss of decay heat removal capability or an unexpected reduction in RCS inventory. Maintaining adequate core cooling and RCS inventory during these abnormal situations is essential for public health and safety. Administrative controls ensure that a cold overpressurization condition will not occur as a result of an uncontrolled mass addition transient.

The Maximum Allowed PORV Setpoint for the Cold Overpressure Mitigation System will be revised on the basis of the results of examinations of reactor vessel material irradiation surveillance specimens performed as required by 10 CFR Part 50, Appendix H

3/4.4.10 STRUCTURAL INTEGRITY

The inservice inspection and testing programs for ASME Code Class 1, 2, and 3 components ensure that the structural integrity and operational readiness of these components will be maintained at an acceptable level throughout the life of the plant. These programs are in accordance with Section XI of the ASME Boiler and Pressure Vessel Code and applicable Addenda as required by 10 CFR 50.55a(g) except where specific written relief has been granted by the Commission pursuant to 10 CFR 50.55a(g)(6)(i).

This TS requires maintaining the structural integrity of components classified as ASME Class 1, 2, or 3 under ASME Section XI and applies to any systems that contain these ASME Class components. These components were designed to provide access to permit inservice inspections in accordance with Section XI of the ASME Boiler and Pressure Vessel Code. As stated in Appendix H of WCAP-14535A (November 1996), Appendix VIII of Section XI of the ASME Boiler and Pressure Vessel Code is not applicable when examining the reactor coolant pump flywheels.

If a flaw or pressure boundary leakage is discovered in an ASME Class 1, 2, or 3 component, the condition should be promptly evaluated in accordance with station procedures for degraded or non-conforming conditions. The actions of this TS are applicable to the condition if the evaluation determines that the flaw or leakage is unacceptable and results in a failure to meet the LCO for structural integrity.

The failure of an ASME Class 1 or 2 component to meet structural integrity requirements requires entry into action a or b, respectively. These actions require restoring structural integrity or isolating the affected component prior to increasing temperature above a specified temperature. If the failure of an ASME Class 1 or 2 component to meet structural integrity requirements is discovered with the component not isolated and above the minimum temperature specified in the associated action, TS 3.0.3 is applicable until the conditions specified in the action are satisfied.

Action c addresses the failure of an ASME Class 3 component to conform to the structural integrity requirements and requires restoring structural integrity of the component or isolating the component from service. While the action specifies no completion time, the actions should be timely and on a schedule commensurate with the safety significance of the affected component.

3/4.4.11 REACTOR COOLANT SYSTEM VENTS

Reactor Coolant System vents are provided to exhaust noncondensible gases and/or steam from the Reactor Coolant System that could inhibit natural circulation core cooling. The OPERABILITY of least one Reactor Coolant System vent path from the reactor vessel head and the pressurizer steam space ensures that the capability exists to perform this function.

The valve redundancy of the Reactor Coolant System vent paths serves to minimize the probability of inadvertent or irreversible actuation while ensuring that a single failure of a vent valve, power supply, or control system does not prevent isolation of the vent path.

The function, capabilities, and testing requirements of the Reactor Coolant System vents are consistent with the requirements of Item II.B.1 of NUREG-0737, "Clarification of TMI Action Plant Requirements," November 1980.

3/4.5.1 ACCUMULATORS

The OPERABILITY of each Reactor Coolant System (RCS) accumulator ensures that a sufficient volume of borated water will be immediately forced into the reactor core through each of the cold legs in the event the RCS pressure falls below the pressure of the accumulators. This initial surge of water into the core provides the initial cooling mechanism during large RCS pipe ruptures.

The limits on accumulator volume, boron concentration, and pressure ensure that the assumptions used for accumulator injection in the safety analysis are met.

In MODES 1 and 2, the accumulator power-operated isolation valves are considered to be "operating bypasses" in the context of IEEE Std. 279-1971, which requires that bypasses of a protective function be removed automatically whenever permissive conditions are not met. In MODES 1, 2, 3, and in MODE 4 within 12 hours of entry into MODE 3 from 4, the accumulator isolation valves are open with their power removed whenever pressurizer pressure is greater than 1000 psig. In addition, as these accumulator isolation valves fail to meet single-failure criteria, removal of power to the valves is required.

The limits for operation with an accumulator inoperable for any reason except an isolation valve closed minimizes the time exposure of the plant to a LOCA event occurring concurrent with failure of an additional accumulator which may result in unacceptable peak cladding temperatures. If a closed isolation valve cannot be immediately opened, the full capability of one accumulator is not available and prompt action is required to place the reactor in a mode where this capability is not required.

3/4.5.2 and 3/4.5.3 ECCS SUBSYSTEMS

The OPERABILITY of two independent ECCS subsystems ensures that sufficient emergency core cooling capability will be available in the event of a LOCA assuming the loss of one subsystem through any single-failure consideration. Either subsystem operating in conjunction with the accumulators is capable of supplying sufficient core cooling to limit the peak cladding temperatures within acceptable limits for all postulated break sizes ranging from the double-ended break of the largest RCS cold-leg pipe downward. In addition, each ECCS subsystem provides long-term core cooling capability in the recirculation mode during the accident recovery period.

Operability of the ECCS flow paths is contingent on the ability of the encapsulations surrounding the containment sump isolation valves (CBS-V8 and CBS-V14) to perform their design functions. During the recirculation phase of an accident, any postulated leakage resulting from the failure of the valves or piping will be contained within the encapsulations, preserving the water inventory needed to support ECCS operation during recirculation. Consequently, maintaining the encapsulations intact with leakage within allowable limits is necessary to ensure operability of the ECCS flow paths. Although designed to withstand containment pressure, the encapsulations do not function as a containment boundary, but rather the release of radioactive fluid and gasses to the environment.

3/4.5.2 and 3/4.5.3 ECCS SUBSYSTEMS (Continued)

Each operable RHR subsystem must remain aligned to provide injection into all four RCS cold legs to meet the assumptions in the ECCS analysis. Isolating RHR flow to any RCS cold leg in MODES 1, 2, or 3 would render both trains of ECCS inoperable, placing the plant in a condition outside design bases.

With the RCS temperature below 350°F, the ECCS operational requirements are reduced. Only one OPERABLE ECCS subsystem is acceptable without single failure consideration during MODE 4 operation on the basis of the stable reactivity condition of the reactor and the limited core cooling requirements, as well as the reduced probability of occurrence of a Design Basis Accident (DBA). It is understood in these reductions in operational requirements that certain automatic safety injection (SI) actuation is not available. In this MODE, sufficient time exists for manual actuation of the required ECCS to mitigate the consequences of a DBA. LCO Condition d. requires that an OPERABLE flow path must be capable of taking suction from the refueling water storage tank upon being manually realigned and transferring suction to the containment sump during the recirculation phase of operation. Thus, LCO Condition d. allows for the manual realignment of the OPERABLE ECCS subsystem to support the ECCS mode of operation.

3/4.5.2 and 3/4.5.3 ECCS SUBSYSTEMS (Continued)

This allowance recognizes that components which comprise the OPERABLE ECCS subsystem such as RHR pumps and heat exchangers may be aligned in other modes of operation to support plant evolutions, e.g., decay heat removal operation. Therefore, in this case, the RHR train is considered OPERABLE during alignment and operation for decay heat removal, if capable of manually being realigned (remote of local) to the ECCS mode of operation and not otherwise inoperable.

The limitation for a maximum of one centrifugal charging pump to be OPERABLE and the Surveillance Requirement to verify all charging pumps and safety injection pumps except the required OPERABLE charging pump to be inoperable in MODES 4 and 5 and in MODE 6 with the reactor vessel head on and the vessel head closure bolts not fully detensioned provides assurance that a mass addition pressure transient can be relieved by the operation of a single PORV or RHR suction relief valve.

When the RCS has a vent area equal to or greater than 18 square inches, or the RCS is in a reduced inventory condition, i.e., whenever reactor vessel water level is lower than 36 inches below the reactor vessel flange, one Safety Injection pump may be made OPERABLE when in MODE 5 or MODE 6 with the reactor vessel head on and the vessel head closure bolts not fully detensioned. When operating in this configuration, cold overpressure protection is provided by either the mechanical vent opening in the RCS boundary, equal to or greater than 18 square inches, or the additional void volume existing when operating in a reduced inventory condition. Either configuration is required to be present prior to making the SI pump OPERABLE. This required RCS vent area or reduced inventory condition and the cold overpressure protection surveillance requirements to verify the presence of the RCS vent area or verify that the reactor vessel water level is lower than 36 inches below the reactor vessel flange provides assurance that a mass addition transient can be mitigated and that adequate cold overpressure protection is provided.

The Surveillance Requirements provided to ensure OPERABILITY of each component ensures that at a minimum, the assumptions used in the safety analyses are met and that subsystem OPERABILITY is maintained. Verifying the correct alignment of manual, power-operated, and automatic valves provides assurance that the proper flow paths exist for operation of ECCS under accident conditions. This verification includes only those valves in the direct flow paths through safety-related equipment whose position is critical to the proper functioning of the safety-related equipment. Vents, drains, sampling connections, instrument taps, etc., that are not directly in the flow path and are not critical to proper functioning of the safety-related equipment are excluded from this surveillance requirement. This surveillance does not apply to valves that are locked, sealed, or otherwise secured in position because these valves are verified in their correct position prior to locking, sealing, or securing. Also, this requirement does not apply to valves that cannot be inadvertently misaligned, such as check valves.

3/4.5.2 and 3/4.5.3 ECCS SUBSYSTEMS (Continued)

An automatic valve may be aligned in other than its accident position provided (1) the valve receives an automatic signal to re-position to its required position in the event of an accident, and (2) the valve is otherwise operable (stroke time within limits, motive force available to re-position the valve, control circuitry energized, and mechanically capable of re-positioning).

With the exception of the operating centrifugal charging pump, the ECCS pumps are normally in a standby, non-operating mode. As such, flow path piping has the potential to develop voids and pockets of entrained gases. Maintaining the piping from the refueling water storage tank (RWST) to the RCS full of water (by verifying at the accessible ECCS piping high points and pump casings, excluding the operating centrifugal charging pump) ensures that the system will perform properly, injecting its full capacity into the RCS upon demand. This will also prevent water hammer, pump cavitation, and pumping of non-condensable gas (e.g., air, nitrogen, or hydrogen) into the reactor vessel following a safety injection (SI) signal or during shutdown cooling. The 31 day Frequency takes into consideration the gradual nature of gas accumulation in the ECCS piping and the procedural controls governing system operation.

It should be noted that Surveillance Requirement 4.5.2b.1 Bases also

3/4.5.2 and 3/4.5.3 ECCS SUBSYSTEMS (Continued)

conditions the Surveillance Requirement by stating that verification is to be performed at the "accessible" ECCS piping high points and pump casing, excluding the operating centrifugal charging pump. Thus, the Bases recognizes that certain "impracticalities," i.e., physical accessibility issues or the operating centrifugal charging pump (only) under dynamic conditions, may preclude verification at certain points and as such provides relief. However, such relief cannot be taken at the expense of possible system inoperability because of lack of periodic verification. Such relief can only be taken if there is reasonable assurance that the collection of gasses and/or void formation is of no significant concern at the points not to be verified periodically within the stipulated surveillance interval (i.e., every 31 days). Furthermore, because of regulatory requirements, even if reasonable assurance can be justified for not requiring verification at a particular high point, such verification must be performed if the high point is accessible. "Inaccessibility" cannot be used as a mere convenience.

The word "accessible" can be defined utilizing the converse (i.e., inaccessible). Therefore, ECCS piping high points may be considered inaccessible if any of the following criteria are met:

a) The high point is located inside the bioshield in containment while at power/critical (Modes 1 & 2), since this area can contain lethal radiation fields during reactor operation. During those situations when the reactor is not a power/critical, other conditions where gaining access poses a Safety and/or Radiological Hazard (e.g., high system temperature, high radiological conditions) may prohibit verification by UT/venting.

b) The high point is located in an area where gaining access poses a Safety and/or Radiological Hazard, e.g.:

- Installation/removal of temporary ladders within containment or other areas where stay times (heat stress / high radiation levels) or other factors must be kept to minimums.

Note: The safety and/or radiological concern should be documented for further evaluation by the responsible organization(s).

c) High points within heat exchanger tubes.

The phrase "full of water" is subjective particularly since most system fluid streams do contain a certain amount of non-condensable gasses. "Full" can be defined in context of the TS Bases whereby ECCS piping may be considered "full of water" if there is reasonable assurance that the content of the non-condensable gas within the system (including the aggregate amount of non-condensable gasses in all ECCS piping) and/or at a particular point will not be of significance to impair the ECCS system from performing

3/4.5.2 and 3/4.5.3 ECCS SUBSYSTEMS (Continued)

properly by injecting its full capacity into the RCS upon demand. Consideration must be given to water hammer, pump cavitation or pumping of non-condensable gas into the reactor vessel following a safety injection (SI) signal or during shutdown cooling.

Other Considerations:

I. Venting causing ECCS Inoperability – opening a vent valve in an ECCS flowpath that will result in both trains of an ECCS sub-system becoming inoperable during the period in which the vent is open such that it cannot be restored during a design basis accident. However, verification can be made by other means e.g., UT.

II. No makeup water source for venting – in the situation where a high point exists between two closed valves and opening a valve to align a water source will result in ECCS inoperability, it is not possible to verify the system is full since there is no source of water to discharge from the vent. Venting at these locations may in fact induce gasses into the system via "gas stripping" as the fluid is depressurized. However, verification can be made by other means e.g., UT.

III. High-pressure fluid within system piping – a vent in a high-pressure system is inaccessible if manipulating the valve can cause personnel safety concerns. However, verification can be made by other means e.g., ultrasonic testing (UT).

IV. The TS Bases states, in part, that "With the exception of the operating centrifugal charging pump, the ECCS pumps are normally in a standby, non-operating mode. As such, flow path piping has the potential to develop voids and pockets of entrained gases." When RHR is in its shutdown cooling mode the potential for development of voids and pockets of entrained gases in flow path piping is, practically, of no concern. Observation of normal operating parameters/indications of the operating RHR train is sufficient verification that the piping in the flow path is full of water. However, these portions of piping in the RHR train that are stagnant and which are used for ECCS purposes would still require verification by other means (e.g., UT, venting) to ensure the stagnant piping is full of water.

V. Should a situation arise (e.g., a change in radiological conditions) at a particular ECCS high point which is being periodically verified and because of changing conditions it is deemed prudent not to confirm the ECCS piping is full of water by venting or other means, and is now considered inaccessible, an engineering evaluation may be done, at the Shift Manager's discretion, as an interim measure to provide reasonable assurance that the potential collection of gasses and/or void formation is of insignificant concern and that ECCS will continue to be OPERABLE to perform its specified safety function. When the condition no longer poses a problem then periodic verification must be performed.

3/4.5.2 and 3/4.5.3 ECCS SUBSYSTEMS (Continued)

VI. Should activities (e.g., maintenance) or events (e.g., flow interruption, depressurization, system leakage) occur that could cause gasses to come out of solution or be introduced into ECCS piping then it may be prudent to verify the ECCS piping as being full at those potentially affected high points including those high points that are not normally verified, if deemed appropriate.

VII. A void detected by UT would require further investigation to determine its size and source, and the void must either be refilled by purging/venting and/or an engineering evaluation to determine impact on continued ECCS OPERABILITY.

Surveillance Requirements for throttle valve position stops and flow balance testing provide assurance that proper ECCS flows will be maintained in the event of a LOCA. Maintenance of proper flow resistance and pressure drop in the piping system to each injection point is necessary to: (1) prevent total pump flow from exceeding runout conditions when the system is in its minimum resistance configuration, (2) provide the proper flow split between injection points in accordance with the assumptions used in the ECCS-LOCA analyses, and (3) provide an acceptable level of total ECCS flow to all injection points equal to or above that assumed in the ECCS-LOCA analyses.

Verifying that the RHR system suction valve interlock is OPERABLE ensures that the RCS will not pressurize the RHR system beyond its design pressure. The value specified in the surveillance requirement ensures that the valves cannot be opened unless the RCS pressure is less than 440 psig. Due to bistable reset design, and the instrument uncertainty, the valves could be open above the interlock setpoint, but below the reset pressure. To ensure that the RHR system design pressure will not be exceeded, the actual interlock setpoint takes into consideration RHR suction relief valve settings and allowable tolerance, bistable deadband, total instrument channel uncertainty associated with the interlock, and available operating margin (differential pressure operating limit) for reactor coolant pump operation to ensure shutdown cooling can be transitioned to RHR. This results in the actual setpoint and reset values being below the value specified in the surveillance requirement. The actual interlock setpoint and reset values, in addition to separate administrative controls, will ensure that the RHR suction isolation valves cannot be opened from the main control room when the RCS pressure could cause the RHR system design pressure to be exceeded.

3/4.5.4 REFUELING WATER STORAGE TANK

The OPERABILITY of the refueling water storage tank (RWST) as part of the ECCS ensures that a sufficient supply of borated water is available for injection by the ECCS in the event of a LOCA. The limits on RWST minimum volume and boron concentration ensure that: (1) sufficient water is available within containment to permit recirculation cooling flow to the core and (2) the reactor will remain subcritical in the cold

3/4.5.2 and 3/4.5.3 ECCS SUBSYSTEMS (Continued)

condition following mixing of the RWST and the RCS water volumes with all control rods inserted except for the most reactive control assembly. These assumptions are consistent with the LOCA analysis.

The contained water volume limit includes and allowance for water not usable because of tank discharge line location or other physical characteristics.

The limits on contained water volume and boron concentration of the RWST also ensure a pH value of between 8.5 and 11.0 for the solution recirculated within containment after a LOCA. This pH band minimizes the evolution of iodine and minimizes the effect of chloride and caustic stress corrosion on mechanical systems and components.

3/4.6.1 PRIMARY CONTAINMENT

3/4.6.1.1 CONTAINMENT INTEGRITY

Primary CONTAINMENT INTEGRITY ensures that the release of radioactive materials from the containment atmosphere will be restricted to those leakage paths and associated leak rates assumed in the safety analyses. This restriction, in conjunction with the leakage rate limitation, will limit the SITE BOUNDARY radiation doses to within the dose guidelines of 10 CFR Part 100 during accident conditions.

3/4.6.1.2 CONTAINMENT LEAKAGE

Primary containment OPERABILITY is maintained by limiting leakage to $\leq 1.0\ L_a$, except prior to the first startup after performing a required Primary Containment Leakage Rate Testing Program leakage test. At this time, applicable leakage limits must be met. The limitations on containment leakage rates ensure that the total containment leakage volume will not exceed the value assumed in the safety analyses at the peak accident pressure, P_a. As an added conservatism, the measured overall integrated leakage rate is further limited to less than or equal to $0.75\ L_a$ during performance of the periodic tests to account for possible degradation of the containment leakage barriers between leakage tests.

The surveillance testing for measuring leakage rates is in accordance with the Containment Leakage Rate Testing Program.

3/4.6.1.3 CONTAINMENT AIR LOCKS

The limitations on closure and leak rate for the containment air locks are required to meet the restrictions on CONTAINMENT INTEGRITY and containment leak rate. Surveillance testing of the air lock seals provides assurance that the overall air lock leakage will not become excessive due to seal damage during the intervals between air lock leakage tests.

3/4.6.1.4 INTERNAL PRESSURE

The limitations on containment internal pressure ensure that: (1) the containment structure is prevented from exceeding its design negative pressure differential with respect to the annulus atmosphere of 3.5 psi and (2) the containment peak pressure does not exceed the design pressure of 52 psig during LOCA conditions.

The maximum peak pressure expected to be obtained from a LOCA event is 49.6 psig. The limit of 16.2 psia for initial positive containment pressure will limit the total pressure to 49.6 psig which is less than the design pressure and is consistent with the safety analyses.

3/4.6.1 PRIMARY CONTAINMENT (Continued)

3/4.6.1.5 AIR TEMPERATURE

The limitation in containment average air temperature ensures that the containment average air temperature does not exceed the initial temperature condition assumed in the overall safety analysis for a steam line break accident. Measurements shall be made at all listed locations, whether by fixed or portable instruments, prior to determining the average air temperature.

3/4.6.1.6 CONTAINMENT VESSEL STRUCTURAL INTEGRITY

This limitation ensures that the structural integrity of the containment steel vessel will be maintained comparable to the original design standards for the life of the facility. Structural integrity is required to ensure that the vessel will withstand the maximum pressure of 52 psig in the event of a LOCA. A visual inspection in accordance with the Containment Leakage Rate Testing Program demonstrates this capability.

3/4.6.1.7 CONTAINMENT VENTILATION SYSTEM

The 36-inch containment shutdown purge supply and exhaust isolation valves are not utilized during plant operation in MODES 1, 2, 3, and 4. A blind flange is installed establishing a Type "B" penetration. The penetration is surveilled in accordance with Surveillance Requirement 4.6.1.1a in MODES 1, 2, 3, and 4.

The use of the containment purge lines is restricted to the 8-inch purge supply and exhaust isolation valves since, unlike the 36-inch valves, the 8-inch valves are capable of closing during a LOCA or steam line break accident. Therefore, the SITE BOUNDARY dose guideline values of 10 CFR Part 100 would not be exceeded in the event of an accident during containment PURGING operation. The total time the containment purge (vent) system isolation valves may be open during MODES 1, 2, 3, and 4 in a calendar year is determined by the actual need for opening the valves for safety-related reasons; e.g., containment pressure control or the reduction of airborne radioactivity to facilitate personnel access for surveillance and maintenance activities.

Leakage integrity tests with a maximum allowable leakage rate for containment purge supply and exhaust supply valves will provide early indication of resilient material seal degradation and will allow opportunity for repair before gross leakage failures could develop. The containment purge supply and exhaust isolation valves are leakage rate tested in accordance with the Containment Leakage Rate Testing Program.

3/4.6.2 DEPRESSURIZATION AND COOLING SYSTEMS

3/4.6.2.1 CONTAINMENT SPRAY SYSTEM

The OPERABILITY of the Containment Spray System ensures that containment depressurization and cooling capability will be available in the event of a LOCA. The pressure reduction and resultant lower containment leakage rate are consistent with the assumptions used in the safety analyses.

The two independent Containment Spray Systems provide post-accident cooling of the containment atmosphere. The Containment Spray Systems also provide a mechanism for removing iodine from the containment atmosphere, and, therefore, the time requirements for restoring an inoperable Spray System to OPERABLE status have been maintained consistent with those assigned other inoperable ESF equipment.

Verifying the correct alignment of manual, power-operated, and automatic valves provides assurance that the proper flow paths exist for operation of the Containment Spray System under accident conditions. This verification includes only those valves in the direct flow paths through safety-related equipment whose position is critical to the proper functioning of the safety-related equipment. Vents, drains, sampling connections, instrument taps, etc., that are not directly in the flow path and are not critical to proper functioning of the safety-related equipment are excluded from this surveillance requirement. This surveillance does not apply to valves that are locked, sealed, or otherwise secured in position because these valves are verified in their correct position prior to locking, sealing, or securing. Also, this requirement does not apply to valves that cannot be inadvertently misaligned, such as check valves.

An automatic valve may be aligned in other than its accident position provided (1) the valve receives an automatic signal to re-position to its required position in the event of an accident, and (2) the valve is otherwise operable (stroke time within limits, motive force available to re-position the valve, control circuitry energized, and mechanically capable of re-positioning).

3/4.6.2.2 SPRAY ADDITIVE SYSTEM

The OPERABILITY of the Spray Additive System ensures that sufficient NaOH is added to the containment spray in the event of a LOCA. The limits on NaOH volume and concentration ensure a pH value of between 8.5 and 11.0 for the solution recirculated within containment after a LOCA. This pH band minimizes the evolution of iodine and minimizes the effect of chloride and caustic stress corrosion on mechanical systems and components. The contained solution volume limit includes an allowance for solution not usable because of tank discharge line location or other physical characteristics. These assumptions are consistent with the iodine removal efficiency assumed in the safety analyses.

3/4.6.2 DEPRESSURIZATION AND COOLING SYSTEMS

3/4.6.2.2 SPRAY ADDITIVE SYSTEM (Continued)

Verifying the correct alignment of manual, power-operated, and automatic valves provides assurance that the proper flow paths exist for operation of the Spray Additive System under accident conditions. This verification includes only those valves in the direct flow paths through safety-related equipment whose position is critical to the proper functioning of the safety-related equipment. Vents, drains, sampling connections, instrument taps, etc., that are not directly in the flow path and are not critical to proper functioning of the safety-related equipment are excluded from this surveillance requirement. This surveillance does not apply to valves that are locked, sealed, or otherwise secured in position because these valves are verified in their correct position prior to locking, sealing, or securing. Also, this requirement does not apply to valves that cannot be inadvertently misaligned, such as check valves.

An automatic valve may be aligned in other than its accident position provided (1) the valve receives an automatic signal to re-position to its required position in the event of an accident, and (2) the valve is otherwise operable (stroke time within limits, motive force available to re-position the valve, control circuitry energized, and mechanically capable of re-positioning).

3/4.6.3 CONTAINMENT ISOLATION VALVES

The OPERABILITY of the containment isolation valves ensures that the containment atmosphere will be isolated from the outside environment in the event of a release of radioactive material to the containment atmosphere or pressurization of the containment and is consistent with the requirements of General Design Criteria 54 through 57 of Appendix A to 10 CFR Part 50.

The opening of locked or sealed closed containment isolation valves on an intermittent basis under administrative control includes the following considerations: (1) stationing an operator, who is in constant communication with control room, at the valve controls, (2) instructing this operator to close these valves in an accident situation, and (3) assuring that environmental conditions will not preclude access to close the valves and that this action will prevent the release of radioactivity outside the containment.

Containment isolation within the time limits specified for those isolation valves designed to close automatically ensures that the release of radioactive material to the environment will be consistent with the assumptions used in the analyses for a LOCA.

3/4.6.3 CONTAINMENT ISOLATION VALVES (continued)

In the event that one containment isolation valve becomes inoperable, the valve must be restored to an operable status within four hours or the affected penetration must be isolated. Additionally, if the penetration is open, the second isolation barrier in the penetration (either another containment isolation valve or the associated closed system within containment) must remain operable. The operability of the closed system is established by its governing Technical Specification. For example, the SG U-tubes would comprise an operable closed system functioning as a containment barrier if tube leakage was within the leakage limitations of T.S. 3.4.6.2. For the hydrogen analyzer portion of the Combustible Gas Control system, the system outside of containment is qualified as an additional containment isolation barrier.

The method of isolating a penetration with an inoperable containment isolation valve must include the use of an isolation barrier that cannot be adversely affected by a single active failure. Barriers that meet this criterion include: (1) a deactivated automatic valves secured in the isolation position, (2) a closed manual valve, and (3) a blind flange. Closed systems within containment do not meet the isolation criterion because they are vulnerable to failures. Isolating a penetration with a deactivated automatic valve may be accomplished using either the inoperable valve, if it can be verified to be fully closed, or the operable automatic valve. Manual valves and blind flanges used to isolate a penetration must be within the penetration's ASME class boundary and qualified to ASME Class 2.

3/4.6.4 COMBUSTIBLE GAS CONTROL

The Hydrogen Mixing Systems are provided to ensure adequate mixing of the containment atmosphere following a LOCA. This mixing action will prevent localized accumulations of hydrogen from exceeding the flammable limit.

3/4.6.5 CONTAINMENT ENCLOSURE BUILDING

3/4.6.5.1 CONTAINMENT ENCLOSURE EMERGENCY AIR CLEANUP SYSTEM

The OPERABILITY of the Containment Enclosure Emergency Air Cleanup System ensures that during LOCA conditions containment vessel leakage into the annulus, and radioactive materials leaking from engineered safety features equipment, from the electrical penetration areas, and from the mechanical penetration tunnel, will be filtered through the HEPA filters and charcoal adsorber trains prior to discharge to the atmosphere.

The EAH system components associated with this Technical Specification include those dampers, fans, filters, etc., and required ductwork and instrumentation that evacuate or isolate areas, route air, and filter the exhaust prior to discharge to the environment. Included among these components are:

- Containment enclosure cooling fans (EAH-FN-5A and 5B)
- Containment enclosure ventilation area return fans (EAH-FN-31A and 31B)
- Containment enclosure emergency exhaust fans (EAH-FN-4A and 4B)
- Charging pump room return air fans (EAH-FN-180A and 180B)
- Containment enclosure emergency clean up filters (EAH-F-9 and F-69)
- PAB / CEVA isolation dampers (PAH-DP-35A, 36A, 35B, and 36B)

The EAH system also provides cooling to the following areas and equipment during normal and emergency operation: containment enclosure ventilation equipment area, the charging pumps, safety injection pumps, residual heat removal pumps, containment spray pumps, and the mechanical penetration area. However, the EAH cooling function is not associated with this Technical Specification, but rather is controlled under Technical Requirement 24, Area Temperature Monitoring.

3/4.6.5.2 CONTAINMENT ENCLOSURE BUILDING INTEGRITY

CONTAINMENT ENCLOSURE BUILDING INTEGRITY ensures that the release of radioactive materials from the primary containment atmosphere will be restricted to those leakage paths and associated leak rates assumed in the safety analyses. This restriction, in conjunction with operation of the Containment Enclosure Emergency Air Cleanup System, will limit the SITE BOUNDARY radiation doses to within the dose guideline values of 10 CFR Part 100 during accident conditions.

Verifying that the enclosure boundary is intact, or has integrity, involves confirming that the doors are closed except during normal transit entry and exit. Additionally, pressure boundary seals must also be intact to maintain the integrity of the containment enclosure.

3/4.6.5 CONTAINMENT ENCLOSURE BUILDING

This limitation ensures that the structural integrity of the containment enclosure building will be maintained comparable to the original design standards for the life of the facility.

Structural integrity is required to provide: (1) protection for the steel vessel from external missiles, (2) radiation shielding in the event of a LOCA, and (3) an annulus surrounding the primary containment that can be maintained at a negative pressure during accident conditions. A visual inspection of the exposed interior and exterior concrete surfaces of the containment enclosure structure in accordance with the Containment Leakage Rate Testing Program, is sufficient to demonstrate this capability.

3/4.7.1 TURBINE CYCLE

3/4.7.1.1 SAFETY VALVES

The OPERABILITY of the main steam line Code safety valves ensures that the Secondary System pressure will be limited to within 110% (1320 psia) of its design pressure of 1200 psia during the most severe anticipated system operational transient. The maximum relieving capacity is associated with a Turbine trip from 100% RATED THERMAL POWER coincident with an assumed loss of condenser heat sink (i.e., no steam bypass to the condenser).

The specified valve lift settings and relieving capacities are in accordance with the requirements of Section III of the ASME Boiler and Pressure Code, (1974 Edition, including the Summer 1975 Addenda). The total relieving capacity for all valves on all of the steam lines is 1.816×10^7 lbs/hr which is 109.8% of the total secondary steam flow of 1.654×10^7 lbs/hr at 100% RATED THERMAL POWER. A minimum of two OPERABLE safety valves per steam generator ensures that sufficient relieving capacity is available for the allowable THERMAL POWER restriction in Table 3.7-1.

STARTUP and/or POWER OPERATION is allowable with safety valves inoperable within the limitations of the ACTION requirements on the basis of the reduction in Secondary Coolant System steam flow and THERMAL POWER required by the reduced Reactor trip settings of the Power Range Neutron Flux channels. The Reactor Trip Setpoint reductions are derived on the following bases:

For four loop operations:

$$\text{Hi } \emptyset = (100/Q_{rated}) \times \left[\frac{(W_s \times h_{fg} \times N)}{K} - Q_{rcp} \right]$$

where:

Hi Ø	=	Safety Analysis power range high neutron flux setpoint, percent of RATED THERMAL POWER
Q_{rated}	=	RATED THERMAL POWER, Mwt
Q_{rcp}	=	Reactor coolant pump heat, Mwt
K	=	Conversion factor, 3.412×10^6 (Btu/hr)/Mwt
h_{fg}	=	heat of vaporization for steam at 110% of the Secondary System design pressure, Btu/lbm
N	=	Number of loops in plant
W_s	=	Minimum total steam flow rate, lbm/hr, of the operable MSSVs on any one steam generator at the MSSV inlet pressure which assures all Secondary System pressures are no greater than 110% of design.

3/4.7.1 TURBINE CYCLE (Continued)

3/4.7.1.1 SAFETY VALVES

The steam flow rate through each operable MSSV is calculated with consideration of 1) opening setpoint with allowance for as-found setpoint tolerance, 2) accumulation, and 3) inlet pressure. For example, if the maximum number of inoperable MSSVs on any one steam generator is one, then W_s is a summation of the calculated flow through each MSSV at the appropriate valve inlet pressure, excluding the MSSV with the highest flow. If the maximum number of inoperable MSSVs per steam generator is three, then W_s is a summation of the calculated flow through each MSSV at the appropriate valve inlet pressure, excluding the three MSIVs with the highest flows. The following plant specific safety valve flow rates were used:

SG Safety Valve Number (Bank No.)	Main Steam System	
	Set Pressure (psia)	Flow (lbm/hr per loop)
1	1200	893,160
2	1210	900,607
3	1220	908,055
4	1230	915,502
5	1240	922,950

The Safety Analysis limit values of the power range high neutron flux setpoints calculated from this algorithm are adjusted lower for use in Technical Specification 3.7.1.1. to account for instrument and channel uncertainties.

Surveillance Requirement 4.7.1.1 verifies operability of the safety valves with a verification of each safety valve lift setpoint in accordance with the Inservice Testing (IST) Program. Table 3.7-2 specifies the safety valve lift settings with a ± 3% tolerance. This lift setting establishes the operability criterion for the safety valves during as-found setpoint verifications. Additionally, this tolerance is used to determine the need for testing of additional safety valves as required by the IST Program. The lift setting in Table 3.7-2 is modified by a footnote that states the setpoint tolerance is ± 1% following safety valve testing. Following an as-found setpoint verification, the lift setting is adjusted to ± 1% in accordance with the footnote to allow for drift. However, the safety valves are capable of performing their design function and, therefore, are operable, when found with a setpoint that is within ± 3% of the specified lift setting.

3/4.7.1 TURBINE CYCLE (Continued)

3/4.7.1.2 AUXILIARY FEEDWATER SYSTEM

BACKGROUND

The auxiliary feedwater system (AFW) consists of the emergency feedwater system (EFW) and the startup feedwater pump (SUFP). The EFW system provides RCS heat removal during emergency conditions, including small break LOCAs, when the main feedwater system is not available. The non safety-related SUFP serves as a back up to the EFW pumps.

Upon loss of normal feedwater flow, the reactor is tripped, and the decay and sensible heat is transferred to the steam generators by the RCS via the reactor coolant pumps or by natural circulation when the pumps are not operational. Heat is removed from the steam generators via the main condensers or the main steam safety or atmospheric relief valves. Steam generator water inventory is maintained by water makeup from the EFW system. The system will supply feed water to the steam generators to remove sufficient heat to prevent the over-pressurization of the RCS and to allow for eventual system cool down.

The EFW system is comprised of two 100% capacity pumps (one motor- and one turbine-driven) whose water source is the Condensate Storage Tank (CST). Either EFW pump provides the required 650-gpm flow at a steam generator pressure of 1236 psia. Suction lines are individually run from the CST to each pump. A common EFW pump recirculation line discharges back to the CST. This return line supports testing the pump on recirculation and ensures minimum flow to prevent pump damage for any system low-flow operating condition. Both pumps feed a common discharge header, which in turn supplies the four emergency feed lines. Additional, redundant pumping capability is provided by the SUFP through two flow paths: (1) the main flow path which flows through the main feedwater isolation valves, and (2) the emergency flow path through the EFW system flow control valves.

During low power operation, the SUFP is aligned to Bus 4 while performing its startup and shutdown functions. Operation of the SUFP to perform its EFW contingency function while aligned to Bus 4, coincident with a loss of offsite power, requires transferring the SUFP to Bus 5. When the startup function is complete, the SUFP is aligned to emergency Bus 5 as plant power is increased.

SAFETY ANALYSES

The EFW system mitigates the consequences of any event involving a loss of normal feedwater. The design basis of the EFW system is to deliver water to the steam generators to remove heat at the minimum required flow at a steam generator pressure corresponding to the lowest set safety valve setting plus 3% (1236 psia).

The limiting design basis accidents for the EFW system include feedwater line break and loss of normal feedwater. The system is designed to provide the required flow following a single active failure and a loss of off-site power and has been evaluated for a station blackout event.

LIMITING CONDITION FOR OPERATION (LCO)

The LCO ensures that the EFW system will perform its design safety function to mitigate the consequences of loss of feed accidents that could otherwise result in over-pressurization of the RCS.

3/4.7.1 TURBINE CYCLE (Continued)

3/4.7.1.2 AUXILIARY FEEDWATER SYSTEM (Continued)

LCO (Continued)

The system is considered OPERABLE when the components and flow paths required to provide feedwater flow to the steam generators are OPERABLE. This requires operability of the three AFW pumps and the required piping, valves, instrumentation and controls:

- The EFW flow control valves and discharge header stop check valves must be fully open to meet the assumptions in the EFW flow analysis while the AFW system is required to be operable (MODES 1, 2, and 3). Isolating an EFW header renders the system inoperable and action d. becomes applicable.
- The EFW pump recirculation valves must remain closed to meet the 650 gpm flow requirement for ANS Condition II events. Opening a recirculation valve renders the associated EFW pump inoperable.
- The main steam upstream drain valves must normally remain open; however, brief closure for periods of less than 15 minutes will not render the turbine-driven pump inoperable.
- Operation of the EFW system to control steam generator levels following a reactor trip does not result in any inoperability that requires entry into the action statements of this TS.
- The EFW system is used only during emergency conditions when the main feedwater system is not available. During all other modes of plant operation, including startup, hot standby, and normal power operation, the system is de-pressurized and has zero flow.
- Operability of the turbine-driven EFW pump requires two operable steam supplies. The steam supply valves, MS-V-393 and V-394 are dual function valves that must open on an EFW initiation signal and close to provide containment isolation per TS 3.6.3. The valves are provided with a backup nitrogen supply that supports only the containment isolation function. With the backup nitrogen isolated or the accumlator pressure less than 500 psig (equivalent to 1530 psig for a single bottle configuration or 772 psig for a dual bottle configuration), the valves are inoperable per TS 3.6.3. However, isolating the penetration in accordance with the action of TS 3.6.3 will render the turbine-driven EFW pump inoperable.

APPLICABILITY

In MODEs 1, 2, and 3, the AFW system is required to be operable in the event of a loss of feedwater event. In MODEs 4 and below, the steam generators are not normally used for heat removal and the AFW system is not required.

3/4.7.1 TURBINE CYCLE (Continued)

3/4.7.1.2 AUXILIARY FEEDWATER SYSTEM (Continued)

ACTIONS

With one AFW pump inoperable, the action provides a 72-hour AOT for restoring the pump to an operable status before requiring a plant shutdown. This time is reasonable based on the availability of redundant equipment and the low probability of an accident occurring during this time. Additional actions with more limiting AOTs apply to conditions involving more than one inoperable AFW pump. In the event that all AFW pumps are inoperable, the plant is in a seriously degraded condition. Consequently, the plant should not be perturbed by any action, including a power change, that might result in a plant trip and demand on the EFW system. The seriousness of this condition requires immediately initiating corrective action to restore at least one AFW pump to operable status as soon as possible.

SURVEILLANCES

Various surveillance requirements, with frequencies ranging from 31 days to eighteen months, demonstrate the operability of the AFW system. Every 31 days, each non-automatic valve in the flow path that is not locked, sealed, or otherwise secured, is verified in its correct position. This verification includes only those valves in the direct flow path through safety-related equipment whose position is critical to the proper functioning of the safety-related equipment. Vents, drains, sampling connections, instrument taps, etc., that are not directly in the flow path and are not critical to proper functioning of the safety-related equipment are excluded from this surveillance requirement.

Testing of the steam-driven EFW pump is exempt from the provisions of TS 4.0.4 for entry into MODE 3. This allowance is necessary because the surveillance testing, which requires a minimum steam pressure of 500 psig, cannot be performed until the plant reaches MODE 3. Once steam pressure reaches 500 psig, administrative controls establish a 24-hour time limit for completing the testing consistent with Specification 4.0.4.

3/4.7.1.3 CONDENSATE STORAGE TANK

The OPERABILITY of the condensate storage tank with the indicated minimum water volume ensures that sufficient water is available to cool the RCS to a temperature of 350°F. The OPERABILITY of the concrete enclosure ensures this availability of water following rupture of the condensate storage tank by a tornado generated missile. The contained water volume limit includes an allowance for water not usable because of instrument uncertainty, tank discharge line location, or other physical characteristics.

3/4.7.1 TURBINE CYCLE (Continued)

3/4.7.1.4 SPECIFIC ACTIVITY

BACKGROUND

Activity in the secondary coolant results from Reactor Coolant System leakage through the steam generator tube(s). Under steady state conditions, the activity is primarily iodines with relatively short half-lives and, thus, indicates current conditions. During transients, I-131 spikes have been observed as well as increased releases of some noble gases. Other fission product isotopes, as well as activated corrosion products in lesser amounts, may also be found in the secondary coolant.

A limit on secondary coolant specific activity during power operation minimizes releases to the environment because of normal operation, anticipated operational occurrences, and accidents.

This limit is lower than the activity value that might be expected from a 1 gpm tube leak (LCO 3.4.6.2, "Reactor Coolant System Leakage - Operational Leakage") of primary coolant at the limit of 1.0 μCi/gm (LCO 3.4.8, "Reactor Coolant System Specific Activity"). The steam line failure is assumed to result in the release of the noble gas and iodine activity contained in the steam generator inventory, the feedwater, and the reactor coolant LEAKAGE. Most of the iodine isotopes have short half-lives (i.e., <20 hours).

With the specified activity limit, the resultant 2-hour thyroid dose to a person at the SITE BOUNDARY would be a small fraction of the 10 CFR 100 (Ref. 1) limits if the main steam safety valves (MSSVs) were open for 2 hours following a trip from full power.

Operating a unit at the allowable limits could result in a 2 hour SITE BOUNDARY exposure of a small fraction of the 10 CFR 100 (Ref. 1) limits, or the limits established as the NRC staff approved licensing basis.

APPLICABLE SAFETY ANALYSES

The accident analysis of the main steam line break (MSLB), as discussed in the UFSAR, Chapter 15 (Ref. 2) assumes the initial secondary coolant specific activity to have a radioactive isotope concentration of 0.10 μCi/gm DOSE EQUIVALENT I-131. This assumption is used in the analysis for determining the radiological consequences of the postulated accident. The accident analysis, based on this and other assumptions, shows that the radiological consequences of an MSLB do not exceed a small fraction of the unit SITE BOUNDARY limits (Ref. 1) for whole body and thyroid dose rates.

With the loss of offsite power, the remaining steam generators are available for core decay heat dissipation by venting steam to the atmosphere through the MSSVs and steam generator atmospheric dump valves (ADVs). The Emergency Feedwater System supplies the necessary makeup to the steam generators. Venting continues until the reactor coolant temperature and pressure have decreased sufficiently for the Residual Heat Removal System to complete the cooldown.

In the evaluation of the radiological consequences of this accident, the activity released from the steam generator connected to the failed steam line is assumed to be released directly to the environment. The unaffected steam generator is assumed to discharge steam and any entrained activity through the MSSVs and ADVs during the event. Since no credit is taken in the analysis for activity plateout or retention, the resultant radiological consequences represent a conservative estimate of the potential integrated dose due to the postulated steam line failure.

Secondary specific activity limits satisfy Criterion 2 of 10 CFR 50.36(c)(2)(ii).

3/4.7.1 TURBINE CYCLE (Continued)

3/4.7.1.4 SPECIFIC ACTIVITY (Continued)

LIMITING CONDITION FOR OPERATION (LCO)

As indicated in the Applicable Safety Analyses, the specific activity of the secondary coolant is required to be $\leq$ 0.10 μCi/gm DOSE EQUIVALENT I-131 to limit the radiological consequences of a Design Basis Accident (DBA) to a small fraction of the required limit (Ref. 1).

Monitoring the specific activity of the secondary coolant ensures that when secondary specific activity limits are exceeded, appropriate actions are taken in a timely manner to place the unit in an operational MODE that would minimize the radiological consequences of a DBA.

APPLICABILITY

In MODES 1, 2, 3, and 4, the limits on secondary specific activity apply due to the potential for secondary steam releases to the atmosphere.

MODE 4 is conditioned by a footnote to recognize that sampling in MODE 4 is limited by the steam generator conditions necessary to obtain a sample. Upon entering MODE 4 from MODE 5, there is not enough steam pressure in the steam generator to provide a sample through the normal sample point. Due to plant limitations, a representative sample can be obtained with greater than 100 psig steam pressure in the steam generator. By requiring the sample to be taken within 12 hours of achieving the 100 psig steam pressure, adequate time for obtaining and analyzing a sample are ensured.

In MODES 5 and 6, the steam generators are not being used for heat removal. Both the RCS and steam generators are depressurized, and primary to secondary LEAKAGE is minimal. Therefore, monitoring of secondary specific activity is not required.

ACTIONS

DOSE EQUIVALENT I-131 exceeding the allowable value in the secondary coolant, is an indication of a problem in the RCS and contributes to increased post accident doses. If the secondary specific activity cannot be restored to within limits within the associated completion time, the unit must be placed in a MODE in which the LCO does not apply. To achieve this status, the unit must be placed in a least HOT STANDBY within 6 hours, and in COLD SHUTDOWN within the following 30 hours. The ACTION completion times are reasonable, based on operating experience, to reach the required unit shutdown conditions from full power in an orderly manner and without challenging unit systems.

3/4.7.1 TURBINE CYCLE (Continued)

3/4.7.1.4 SPECIFIC ACTIVITY (Continued)

SURVEILLANCE REQUIREMENTS (SR)

SR 4.7.1.4

This SR verifies that the secondary specific activity is within the limits of the accident analysis. A gamma isotopic analysis of the secondary coolant, which determines DOSE EQUIVALENT I-131, confirms the validity of the safety analysis assumptions as to the source terms in post accident releases. It also serves to identify and trend any unusual isotopic concentrations that might indicate changes in reactor coolant activity or LEAKAGE. The 31-day frequency is based on the detection of increasing trends of the level of DOSE EQUIVALENT I-131, and allows for appropriate action to be taken to maintain levels below the LCO limit.

REFERENCES

1. 10 CFR 100.11.
2. UFSAR, Chapter 15.

3/4.7.1.5 MAIN STEAM LINE ISOLATION VALVES

The OPERABILITY of the main steam line isolation valves ensures that no more than one steam generator will blow down in the event of a steam line rupture. This restriction is required to: (1) minimize the positive reactivity effects of the Reactor Coolant System cooldown associated with the blowdown, and (2) limit the pressure rise within containment in the event the steam line rupture occurs within containment. The OPERABILITY of the main steam isolation valves within the closure times of the Surveillance Requirements are consistent with the assumptions used in the safety analyses.

3/4.7.1.6 ATMOSPHERIC RELIEF VALVES

The OPERABILITY of the Atmospheric Relief Valves (ARVs) ensures the controlled removal of reactor decay heat during reactor cooldown, plant startup, and after a turbine trip, when the condenser and/or the turbine bypass system are not available. When available, the ARVs can be used to reduce main steam pressure for both hot shutdown and cold shutdown conditions. The ARVs provide a method for cooling the plant to residual heat removal entry conditions should the turbine bypass system to the condenser be unavailable. This is done in conjunction with the Auxiliary Feedwater System providing cooling water from the condensate storage tank (CST).

3/4.7.1 TURBINE CYCLE (Continued)

3/4.7.1.6 ATMOSPHERIC RELIEF VALVES (Continued)

One ARV line for each of the four steam generators is provided. Each ARV line consists of one ARV and an associated block valve. The ARVs are provided with upstream block valves to provide an alternate means of isolation.

The ARVs are equipped with pneumatic controllers to permit control of the cooldown rate. The ARVs are provided with a pressurized gas supply of bottled nitrogen that, on a loss of pressure in the normal instrument air supply, automatically supplies nitrogen to operate the ARVs. The nitrogen supply is sized to provide sufficient pressurized gas to operate the ARVs for the time required for Reactor Coolant System cooldown to RHR entry conditions. The ARVs are OPERABLE with only a DC power source available. In addition, handwheels are provided for local manual operation.

3/4.7.2 STEAM GENERATOR PRESSURE/TEMPERATURE LIMITATION

The limitation on steam generator pressure and temperature ensures that the pressure-induced stresses in the steam generators do not exceed the maximum allowable fracture toughness stress limits. The limitations of 70°F and 200 psig are based on a steam generator RT_{NDT} of 60°F and are sufficient to prevent brittle fracture.

3/4.7.3 PRIMARY COMPONENT COOLING WATER SYSTEM

The OPERABILITY of the Primary Component Cooling Water System ensures that sufficient cooling capacity is available for continued operation of safety-related equipment during normal and accident conditions. Portions of the PCCW system automatically isolate on low and low-low head tank level signals. This feature, which is necessary for operability of the PCCW system, isolates the non-seismic portions of the system so that the safety function of PCCW is not compromised in the event of a failure in the non-seismic part of the system. The redundant cooling capacity of this system, assuming a single failure, is consistent with the assumptions used in the safety analyses.

The system design also includes an automatic trip of the PCCW pumps on high system temperature. The purpose of this function is to protect the PCCW system components from further degradation by preventing recycling of hot PCCW fluid through the process heat exchangers. Tripping a PCCW pump on high temperature requires that a single failure has already occurred; therefore, the high temperature pump trip function is not a requirement for PCCW system operability.

Verifying the correct alignment of manual, power-operated, and automatic valves provides assurance that the proper flow paths exist for operation of the Primary Component Cooling Water System under accident conditions. This verification includes only those valves in the direct flow paths through safety-related equipment whose position is critical to the proper functioning of the safety-related equipment. Vents, drains, sampling connections, instrument taps, etc., that are not directly in the flow path and are not critical to proper functioning of the safety-related equipment are excluded from this surveillance requirement. This surveillance does not apply to valves that are locked, sealed, or otherwise secured in position because these valves are verified in their correct position prior to locking, sealing, or securing. Also, this requirement does not apply to valves that cannot be inadvertently misaligned, such as check valves.

3/4.7.3 PRIMARY COMPONENT COOLING WATER SYSTEM (Continued)

An automatic valve may be aligned in other than its accident position provided (1) the valve receives an automatic signal to re-position to its required position in the event of an accident, and (2) the valve is otherwise operable (stroke time within limits, motive force available to re-position the valve, control circuitry energized, and mechanically capable of re-positioning).

3/4.7.4 SERVICE WATER SYSTEM/ULTIMATE HEAT SINK

The Service Water System consists of two independent loops, each of which can operate with either a service water pump train or a cooling tower pump train. Each service water loop consists of a service water pump and the piping, valves, and other components necessary to provide the flowpath required for heat removal. Each service water cooling tower loop consists of a service water cooling tower pump and the necessary piping, valves and other components required to provide its flowpath. The OPERABILITY of the Service Water System ensures that sufficient cooling capacity is available for continued operation of safety-related equipment during normal and accident conditions. The redundant cooling capacity of this system, assuming a single failure, is consistent with the assumptions used in the safety analyses, which also assumes loss of either the cooling tower or ocean cooling.

Cooling is normally provided by the Atlantic Ocean via the service water pumphouse. A seismically qualified mechanical draft cooling tower is provided as a backup to the ocean cooling water source because the supply from the circulating water tunnels is not seismically qualified. The mechanical draft cooling tower was designed to use three cells to support two units. Unit 1 utilizes two train-related cells; cell 1 serves Train A and has a single fan, the common cell serves Train B and has two fans. The cooling tower design basis is to provide the necessary ultimate heat sink in the event of a loss of ocean tunnel water flow; however, this source may be used during normal operations subject to the level and temperature limitations of this specification.

Operability of the ultimate heat sink requires a portable cooling tower makeup system stored in its design operational readiness state. A seismic event could result in loss of the ocean supply to the service water system and reliance on operation of the cooling tower. Regulatory Guide (RG) 1.27 requires a heat sink capable of providing cooling for 30 days; however, the cooling tower basin contains sufficient water for only seven days of operation. Consequently, after seven days, the portable cooling tower makeup system provides a reliable makeup source for the cooling tower to meet the 30-day requirement. The normal source of cooling tower makeup, potable water, is not considered since it is not designed to withstand a seismic event.

The portable cooling tower makeup system, which must be stored in a seismic location, consists of the following:

- A diesel-drive driven pump
- 3000 feet of flexible hose and associated couplings
- A suction strainer

3/4.7.4 SERVICE WATER SYSTEM/ULTIMATE HEAT SINK (Continued)

The portable makeup pump must have a minimum capacity of 200 gpm, which ensures the capability to meet the calculated makeup requirement of 140 gpm at seven days after a LOCA. A surveillance requirement verifies the ability of the pump to produce flow of at least 200 gpm every 18 months. In addition, a monthly inventory and periodic inspections of the hose confirm the availability and integrity of sufficient flexible hose.

The seven-day period during which the cooling tower can operate without makeup water provides adequate time to move the portable pump into position, lay the hose, and make the system ready for operation. As a result, the portable pump is not necessarily immediately available for operation when stored in its design operational readiness state. The seven-day period allows ample time to charge the battery, obtain diesel fuel, inflate the trailer tires, and obtain a tow vehicle.

Switchover from the service water pumphouse to the mechanical draft cooling tower is accomplished either automatically (Tower Actuation (TA) signal) or manually. Manual action is required to realign the system from the cooling tower to the service water pumphouse. While a cooling tower pump is operating, interlocks prevent the train associated service water pumps from starting. To provide additional protection, during operation while aligned to the cooling tower, the service water pump control switches may be maintained in the pull-to-lock position to prevent inadvertent pump operation. As previously discussed, realignment to the service water pumphouse requires manual action; maintaining the control switches in the pull-to-lock position does not change this required action sequence. Pump operation is not affected by maintaining the control switches in the pull-to-lock position during this period; therefore, OPERABILITY of the service water pumps is not compromised.

The limitations on service water pumphouse minimum water level and the requirements for cooling tower OPERABILITY are based on providing a 30-day cooling water supply to safety-related equipment without exceeding the safety related equipment design basis temperature and is consistent with the recommendations of Regulatory Guide 1.27, "Ultimate Heat Sink for Nuclear Plants," March 1974.

The Cooling Tower is normally aligned to allow return flow to bypass the tower sprays and return to the basin. In addition, the control switches for the cooling tower fans are normally maintained in the "pull-to-lock" position. Upon receipt of a Tower Actuation Signal, the fans and sprays are manually operated as required. This manual operation, which is governed by procedures, ensures that ice does not buildup on the cooling tower tile fill and fans. The cooling tower basin temperature limit of 70°F provides sufficient time for manual initiation of the cooling tower sprays and fans following the design basis seismic event with a concurrent LOCA, during the design extreme ambient temperature conditions. Under this scenario, manual action is sufficient to maintain the cooling tower basin at a temperature which precludes equipment damage during the postulated design basis event.

3/4.7.4 SERVICE WATER SYSTEM/ULTIMATE HEAT SINK (Continued)

Verifying the correct alignment of manual, power-operated, and automatic valves provides assurance that the proper flow paths exist for operation of the Service Water System under accident conditions. This verification includes only those valves in the direct flow paths through safety-related equipment whose position is critical to the proper functioning of the safety-related equipment. Vents, drains, sampling connections, instrument taps, etc., that are not directly in the flow path and are not critical to proper functioning of the safety-related equipment are excluded from this surveillance requirement. This surveillance does not apply to valves that are locked, sealed, or otherwise secured in position because these valves are verified in their correct position prior to locking, sealing, or securing. Also, this requirement does not apply to valves that cannot be inadvertently misaligned, such as check valves.

An automatic valve may be aligned in other than its accident position provided (1) the valve receives an automatic signal to re-position to its required position in the event of an accident, and (2) the valve is otherwise operable (stroke time within limits, motive force available to re-position the valve, control circuitry energized, and mechanically capable of re-positioning).

3/4.7.5 (THIS SPECIFICATION NUMBER IS NOT USED)

3/4.7.6 CONTROL ROOM SUBSYSTEMS

The OPERABILITY of the Control Room Emergency Makeup Air and Filtration Subsystem ensures that the control room will remain habitable for operations personnel during and following credible accident conditions. Cumulative operation of the system with the heaters on for 10 hours over a 31-day period is sufficient to reduce the buildup of moisture on the absorbers and HEPA filters. Heaters cycle on and off to maintain the relative humidity below 70%. The OPERABILITY of this system in conjunction with control room design provisions is based on limiting the radiation exposure to personnel occupying the control room to 5 rems or less whole body, or its equivalent. This limitation is consistent with the requirements of General Design Criterion 19 of Appendix A, 10 CFR Part 50. ANSI N510-1980 will be used as a procedural guide for surveillance testing.

3/4.7.6 CONTROL ROOM SUBSYSTEMS (Continued)

The OPERABILITY of the Control Room Emergency Makeup Air and Filtration Subsystem is also contingent on maintaining the integrity of the Control Room complex envelope. Envelope integrity is maintained by controlling activities that could introduce sources of makeup air or infiltration of unfiltered air other than that assumed in the UFSAR. Examples of activities that could render either or both subsystem trains inoperable: (1) removal of penetration seals; (2) blocking open or removing either Control Room door (C312, C325); (3) open access doors to filter units 1-CBA-F-38, 8038; (4) repositioning of remote intake manual isolation valves 1, 2-CBA-V9; (5) any activity which allows makeup air to be drawn into the system from locations other than the remote intakes (e.g., removal of an opacity detector or radiation monitor in the DG Building, cutting of either makeup air line, etc.). Breaches to the envelope shall be controlled by station programs and may require an engineering evaluation to ensure UFSAR assumptions remain valid. Refer to Engineering Evaluation 91-39, Rev. 1 and CR 02-16293 for specific information and compensatory measures.

The OPERABILITY of the safety-related Control Room Air Conditioning Subsystem ensures that the allowable temperature for continuous-duty rating for the equipment and instrumentation cooled by this system is not exceeded. The safety-related Control Room Air Conditioning Subsystem consists of two independent and redundant trains that provide cooling of recirculated control room air. The design basis of the safety-related Control Room Air Conditioning Subsystem is to maintain the control room temperature for 30 days of continued occupancy. The safety-related chillers are designed to operate in conditions down to the design basis winter temperature. When the chiller units unload due to insufficient heat load on the system, each Control Room air Conditioning Subsystem remains operable. Surveillance to demonstrate OPERABILITY will verify each subsystem has the capability to maintain the control room area temperature less than the limiting equipment qualification temperature. The operational surveillance will be performed on a quarterly basis, requiring each safety-related Control Room Air Conditioning Subsystem to operate over a twenty-four hour period. This will ensure the safety related subsystem can remove the heat load based on daily cyclic outdoor air temperature.

The Control Room Air Conditioning fans are necessary to support both the operation of the Control Room Emergency Makeup Air and Filtration and the Control Room Air Conditioning Subsystems.

3/4.7.7 SNUBBERS

All snubbers are required OPERABLE to ensure that the structural integrity of the Reactor Coolant System and all other safety-related systems is maintained during and following a seismic or other event initiating dynamic loads.

3/4.7.7 SNUBBERS (Continued)

Snubbers are classified and grouped by design and manufacturer but not by size. For example, mechanical snubbers utilizing the same design features of the 2-kip, 10-kip and 100-kip capacity manufactured by Company "A" are of the same type. The same design mechanical snubbers manufactured by Company "B" for the purposes of this Technical Specification would be of a different type, as would hydraulic snubbers from either manufacturer.

A list of individual snubbers with detailed information of snubber location and size and of system affected shall be available at the plant in accordance with Section 50.71(c) of 10 CFR Part 50. The accessibility of each snubber shall be determined and approved by the Station Operation Review Committee (SORC). The determination shall be based upon the existing radiation levels and the expected time to perform a visual inspection in each snubber location as well as other factors associated with accessibility during plant operations (e.g., temperature, atmosphere, location, etc.), and the recommendations of Regulatory Guides 8.8 and 8.10. The addition or deletion of any hydraulic or mechanical snubber shall be made in accordance with Section 50.59 of 10 CFR Part 50.

Surveillance to demonstrate OPERABILITY is by performance of the requirements of an approved inservice inspection program.

Permanent or other exemptions from the surveillance program for individual snubbers may be granted by the Commission if a justifiable basis for exemption is presented and, if applicable, snubber life destructive testing was performed to qualify the snubbers for the applicable design conditions at either the completion of their fabrication or at a subsequent date. Snubbers so exempted shall be listed in the list of individual snubbers indicating the extent of the exemptions.

The service life of a snubber is established via manufacturer input and information through consideration of the snubber service conditions and associated installation and maintenance records (newly installed snubbers, seal replaced, spring replaced, in high radiation area, in high temperature area, etc.). The requirement to monitor the snubber service life is included to ensure that the snubbers periodically undergo a performance evaluation in view of their age and operating conditions. These records will provide statistical bases for future consideration of snubber service life.

3/4.7.8 SEALED SOURCE CONTAMINATION

The limitations on removable contamination for sources requiring leak testing, including alpha emitters, is based on 10 CFR 70.39(a)(3) limits for plutonium. This limitation will ensure that leakage from Byproduct, Source, and Special Nuclear Material sources will not exceed allowable intake values.

Sealed sources are classified into three groups according to their use, with Surveillance Requirements commensurate with the probability of damage to a source in that group. Those sources which are frequently handled are required to be tested more often than those which are not. Sealed sources which are continuously enclosed within a shielded mechanism (i.e., sealed sources within radiation monitoring or boron measuring devices) are considered to be stored and need not be tested unless they are removed from the shielded mechanism.

3/4.7.9 (THIS SPECIFICATION NUMBER IS NOT USED.)

3/4.7.10 (THIS SPECIFICATION NUMBER IS NOT USED.)

3/4.8.1 AC SOURCES

BACKGROUND

The Seabrook Station Class 1E AC Electrical Power Distribution System AC sources consist of the preferred and alternate offsite power sources and the onsite standby power sources (Train A and Train B emergency diesel generators (EDGs)). As required by 10 CFR 50, Appendix A, GDC 17 (Ref 1), the design of the AC electrical power system provides independence and redundancy to ensure an available source of power to the Engineered Safety Feature (ESF) systems.

The onsite Class 1E AC Distribution System is divided into redundant load groups (trains) so that the loss of any one group does not prevent the minimum safety functions from being performed. Each train has connections to two offsite power sources and a single EDG.

Offsite power is supplied to the unit switchyard from the transmission network by three transmission lines. From the switchyard, two electrically and physically separated circuits provide AC power, through the generator step up transformer and/or step down station auxiliary transformers, to the 4.16 kV ESF buses. A detailed description of the offsite power network and the circuits to the Class 1E ESF buses is found in the UFSAR, Chapter 8 (Ref. 2).

An offsite circuit consists of breakers, transformers, switches, interrupting devices, cabling, and controls, required to transmit power from the offsite transmission network to the onsite Class 1E ESF buses.

The onsite standby power source for each 4.16 kV ESF bus is a dedicated EDG (DG-1A and DG-1B). DG-1A and DG-1B are dedicated to ESF buses E5 and E6, respectively. An EDG starts automatically on a safety injection (SI) signal (i.e., low pressurizer pressure or high containment pressure signals) or on an ESF bus undervoltage signal. After the EDG has started, it will automatically tie to its respective bus after offsite power is tripped as a consequence of ESF bus undervoltage, or degraded voltage coincident with an SI signal. The EDGs will also start and operate in the standby mode without tying to the ESF bus on a SI signal alone. Following the trip of offsite power, an undervoltage signal strips nonpermanent loads from the ESF bus. When the EDG is tied to the ESF bus, loads are then sequentially connected to its respective ESF bus by the emergency power sequencer timer. The sequencing logic controls the permissive and starting signals to motor breakers to prevent overloading the EDG by automatic load application.

In the event of a loss of offsite power, the ESF electrical loads are automatically connected to the EDGs in sufficient time to provide for safe reactor shutdown and to mitigate the consequences of a Design Basis Accident (DBA) such as a loss of coolant accident (LOCA). Certain required unit loads are returned to service in a predetermined sequence in order to prevent overloading the EDG in the process. Within 108 seconds after the EDG restores power to the bus, all loads needed to recover the unit or maintain it in a safe condition are returned to service.

Ratings for Train A and Train B EDGs satisfy the requirements of Regulatory Guide 1.9 (Ref. 3). The continuous service rating of each EDG is 6083 kW (rounded to 6100 kW) with 10% overload permissible for up to 2 hours in any 24 hour period. The ESF loads that are powered from the 4.16 kV ESF buses are listed in Reference 2.

---

* Seabrook Station is only committed to demonstrating the OPERABILITY of the diesel generators in accordance with the recommendations of Regulatory Guides 1.9, "Selection of Diesel Generator Set Capacity for Standby Power Supplies," Revision 2, December 1979; 1.108, "Periodic Testing of Diesel Generator Units Used as Onsite Electric Power Systems at Nuclear Power Plants," Revision 1, August 1977, Errata September 1977; and 1.137, "Fuel-Oil Systems for Standby Generators." Revision 1, October 1979. Exceptions to these Regulatory Guides are noted in the UFSAR.

** Seabrook Station is only committed to IEEE Std. 387-1972 and 1977.

3/4.8.1 AC SOURCES (Continued)

To reduce the risk of performing extended EDG maintenance activities of up to 14 days while on-line a non-safety related supplemental emergency power system (SEPS) may be relied on when available. The SEPS is designed to provide back up power to either emergency bus whenever one of the emergency diesel generators (EDG) is out of service, particularly during Modes 1 through 4 operation. The SEPS is verified available and an operational readiness status check is performed when it is anticipated that one of the EDGs will be inoperable for longer than the allowable outage time of 72 hours. The design of the SEPS is capable of providing the required safety and non-safety related loads in the event of a total loss of offsite power and if both emergency diesel generators fail to start and load. During these events it is assumed that there is no seismic event or an event that requires safeguards actuation, e.g., safety injection, containment building spray, etc.

APPLICABLE SAFETY ANALYSES

The initial conditions of DBA and transient analyses in the UFSAR, Chapter 6 (Ref. 4) and Chapter 15 (Ref. 5), assume ESF systems are OPERABLE. The AC electrical power sources are designed to provide sufficient capacity, capability, redundancy, and reliability to ensure the availability of necessary power to ESF systems so that the fuel, Reactor Coolant System (RCS), and containment design limits are not exceeded. A discussion of these limits may be found in the Bases for Section 3/4.2, Power Distribution Limits; Section 3/4.4, Reactor Coolant System; and Section 3/4.6, Containment Systems.

The OPERABILITY of the AC electrical power sources is consistent with the initial assumptions of the Accident analyses and is based upon meeting the design basis of the unit. This results in maintaining at least one train of the onsite or offsite AC sources OPERABLE during Accident conditions in the event of:

a. An assumed loss of all offsite power or all onsite AC power and

b. A worst case single failure.

The AC sources satisfy Criterion 3 of 10 CFR 50.36.

The SEPS is not designed for DBA loads and is not credited in the accident analyses.

LIMITING CONDITION FOR OPERATION (LCO)

Two qualified circuits between the offsite transmission network and the onsite Class 1E Electrical Power System and separate and independent EDGs for each train ensure availability of the required power to shutdown the reactor and maintain it in a safe shutdown condition after an anticipated operational occurrence (AOO) or a postulated DBA. One of the required, independent offsite AC sources consists of the circuit from an offsite transmission line through the UATs to buses E5 and E6. Operability of this circuit requires that both UAT supply breakers be closed, energizing the emergency buses. The second required independent offsite AC source consists of the circuit from a separate offsite transmission line through the RATs to buses E5 and E6. For this circuit to be operable, each emergency bus RAT supply breaker must be either (1) closed, or (2) in standby with capability for automatic closure.

Each offsite circuit must be capable of maintaining rated frequency and voltage, and accepting required loads during an accident, while connected to the ESF buses.

3/4.8.1 AC SOURCES (Continued)

LIMITING CONDITION FOR OPERATION (LCO) (continued)

The offsite circuits receive power from three 345,000 volt transmission lines which terminate in a common termination yard, which is then fed to the switchyard. The switchyard is arranged through circuit breakers and transformers to form the two qualified circuits. Each ESF bus is capable of being supplied by the offsite circuits either through the unit auxiliary transformer (UAT) or reserve auxiliary transformer (RAT). The UAT is the preferred power supply and the RAT is the alternate power supply.

Each EDG must be capable of starting, accelerating to rated speed and voltage, and connecting to its respective ESF bus on detection of bus undervoltage. This will be accomplished within 10 to 12 seconds, depending on the type of event (12 seconds for loss of power only event, and 10 seconds for events requiring safety injection). Each EDG must also be capable of accepting required loads within the assumed loading sequence intervals, and continue to operate until offsite power can be restored to the ESF buses. These capabilities are required to be met from a variety of initial conditions such as EDG in standby with the engine hot and EDG in standby with the engine at ambient (keep-warm temperature) conditions. Additional EDG capabilities must be demonstrated as well to other required surveillances, e.g., capability of the EDG to revert to standby status on an ECCS signal while operating in parallel test mode.

In addition, though not specifically mentioned in the LCO, one required emergency power sequencer timer per train must be OPERABLE as well. The sequencer is an essential support system to the EDG associated with a given ESF bus. Furthermore, the sequencer is on the primary success path for most major AC electrically powered safety systems powered from the associated ESF bus. Therefore, loss of an ESF bus sequencer affects every major ESF system in the train. Thus, the proper sequencing of loads, including tripping of nonessential loads is a required support function for EDG OPERABILITY.

The AC sources in one train must be separate and independent (to the extent possible) of the AC sources in the other train (Ref. 1). For the EDGs, separation and independence are complete.

To meet the TS 3.8.1.1 requirement for two independent offsite sources, each emergency bus must (1) be energized from its UAT, and (2) have its RAT supply available via fast transfer capability. Otherwise, the appropriate action of TS 3.8.1.1 must be entered. Below are examples of the application of the TS to various configurations of the offsite AC sources:

- The offsite source via the UATs is operable when both buses E5 and E6 are powered via the UATs.
- The offsite source via the RATs is operable when the RAT is the standby power supply for both buses E5 and E6, and both buses have operable auto transfer capability to the RAT.
- With one emergency bus powered from a UAT with capability for auto transfer to the RAT, and the other bus powered from a RAT, the offsite source via the UAT is inoperable. The source through the UAT is not available via auto transfer on the bus that is energized from the RAT, (TS 3.8.1.1 action a is applicable).
- With the UAT powering one emergency bus <u>without</u> auto transfer capability to the RAT coincident with the RAT powering the other emergency bus (no auto transfer from the RAT to the UAT exists), both offsite sources are inoperable. (TS 3.8.1.1 action e is applicable.)
- With both emergency buses powered from the RATs, the offsite source via the UATs is inoperable since no auto transfer capability to the UATs exists. (TS 3.8.1.1 action a is applicable.)

3/4.8.1 AC SOURCES (Continued)

LIMITING CONDITION FOR OPERATION (LCO) (continued)

APPLICABILITY

The AC sources are required to be OPERABLE in MODES 1, 2, 3, and 4 to ensure that:

a. Acceptable fuel design limits and reactor coolant pressure boundary limits are not exceeded as a result of AOOs or abnormal transients and

b. Adequate core cooling is provided and containment OPERABILITY and other vital functions are maintained in the event of a postulated DBA.

The AC power requirements for MODES 5 and 6 are covered in LCO 3/4.8.2, "AC Sources – Shutdown."

ACTIONS

For all of the following ACTIONs, if the inoperable AC electric power sources cannot be restored to OPERABLE status within the required AOT, the unit must be brought to a MODE in which the LCO does not apply. To achieve this status, the unit must be brought to at least HOT STANDBY within 6 hours and to COLD SHUTDOWN within the following 30 hours.

3/4.8.1 AC SOURCES (Continued)

LIMITING CONDITION FOR OPERATION (LCO) (continued)

The AOTs are reasonable, based on operating experience, to reach the required unit conditions from full power conditions in an orderly manner and without challenging plant systems.

The term, "verify," as used in this context means to administratively check by examining logs or other information to determine if certain components are out of service for maintenance or other reasons. It does not mean to perform the Surveillance Requirements needed to demonstrate the OPERABILITY of the component.

a. ACTION a. is to ensure a highly reliable power source remains with one offsite circuit inoperable, it is necessary to verify the OPERABILITY of the remaining required offsite circuit on a more frequent basis, i.e., within 1 hour of discovery and at least once every 8 hours thereafter. However, if a second required circuit fails Surveillance Requirement (SR) 4.8.1.1.1a, the second offsite circuit is inoperable, and ACTION e., for two offsite circuits inoperable, would have to be entered.

According to Regulatory Guide 1.93 (Ref. 6), operation may continue with one offsite power source inoperable for a period that should not exceed 72 hours. With one offsite circuit inoperable, the reliability of the offsite system is degraded, and the potential for a loss of offsite power is increased, with attendant potential for a challenge to the unit safety systems. In this condition, however, the remaining OPERABLE offsite circuit and EDGs are adequate to supply electrical power to the onsite Class 1E Distribution System.

The 72-hour allowed outage time (AOT) takes into account the capacity and capability of the remaining AC sources, a reasonable time for repairs, and the low probability of a DBA occurring during this period.

b. When one EDG is inoperable it is necessary to verify the availability of the offsite circuits on a more frequent basis to ensure a highly reliable power source remains. Since the required ACTION only specifies "perform," a failure of SR 4.8.1.1.1a acceptance criteria does not result in onsite Class 1E a required ACTION being not met. However, if a circuit fails to pass SR 4.8.1.1.1a, it is inoperable. Upon offsite circuit inoperability, additional conditions and required ACTIONs must then be entered.

ACTION b. requires performance of ACTION d., which is intended to provide assurance that a loss of offsite power, during the period that a EDG is inoperable, does not result in a complete loss of safety function of critical features/systems. While in this condition (one EDG inoperable), the remaining OPERABLE EDG and offsite circuits are adequate to supply electrical power to the Distribution System. Refer to ACTION d. basis for further discussion.

ACTION b. also requires starting the remaining EDG per SR 4.8.1.1.2a.5) within 24 hours to demonstrate OPERABILITY. The associated * footnote provides an allowance to avoid unnecessary testing of the remaining EDG to verify OPERABLITY. If the remaining EDG has been successfully operated within the last 24 hours, if currently operating or if it can be determined that the cause of the inoperable EDG does not exist on the OPERABLE EDG, SR 4.8.1.1.2a.5) does not have to be performed. If the cause of inoperability exists on the remaining EDG, the remaining EDG would be declared inoperable upon discovery and ACTION f. would be entered for two EDGs inoperable. Once the failure is repaired, the common cause failure no longer exists, and ACTION f. is satisfied. If the cause of the initial inoperable EDG cannot be confirmed not to exist on the remaining EDG(s), performance of SR 4.8.1.1.2a.5) suffices to provide assurance of continued OPERABILITY of the remaining EDG while the common cause possibility is evaluated under the corrective action program.

3/4.8.1 AC SOURCES (Continued)

LIMITING CONDITION FOR OPERATION (LCO) (continued)

In the event the inoperable EDG is restored to OPERABLE status prior to completing the actions required in ACTION b., the plant corrective action program will continue to evaluate the common cause possibility. This continued evaluation, however, is no longer under the 24 hour constraint imposed while in ACTION b.

According to Generic Letter 84-15 (Ref. 7), 24 hours is a reasonable time to confirm that the OPERABLE EDG is not affected by the same problem as the inoperable EDG.

According to Regulatory Guide 1.93 (Ref. 6), operation may continue with one onsite power source inoperable for a period that should not exceed 72 hours. The remaining OPERABLE EDG and offsite circuits are adequate to supply electrical power to the onsite Class 1E Distribution System. The 72-hour AOT takes into account the capacity and capability of the remaining AC sources, a reasonable time for evaluation and repairs, and the low probability of a DBA occurring during this period.

The requirement for restoring the EDG to OPERABLE status within 72 hours may be extended to 14 days to perform either extended preplanned maintenance (both preventive and corrective) or extended unplanned corrective maintenance work. Prior to exceeding the 72-hour AOT the SEPS must be available in accordance with Technical Requirement (TR) 31. When applying this AOT extension, the risk impact of this activity is managed through Seabrook Station's programs and procedures in place to implement 10 CFR 50.65(a)(4) and its implementation guidance, NRC Regulatory Guide 1.182, "Assessing and Managing Risks Before Maintenance Activities at Nuclear Power Plants" (Ref. 14).

During normal operation, with both EDGs Operable, SEPS availability is demonstrated by performance of the periodic surveillance requirements specified in TR 31.

When an EDG is inoperable and the SEPS is relied upon as a backup power source, an operational readiness status check of the SEPS must be performed in addition to the periodic surveillances. The operational readiness status check is considered a just-in-time check to ensure continued SEPS availability. The operational readiness status check is specified in TR 31 and consists of: (1) verifying the SEPS is operationally ready for automatic start and energization of the selected emergency bus; (2) verifying 24-hour onsite fuel supply; and (3) verifying alignment to the selected 4160 volt emergency bus and associated 480 volt bus. In addition, the operational readiness status check must continue to be performed at least once every 72 hours following the initial SEPS availability verification. Should the SEPS become unavailable during the 14-day AOT and cannot be restored to available status, the EDG AOT reverts back to 72 hours. The 72 hours begins with the discovery of the SEPS unavailability, not to exceed a total of 14 days from the time the EDG initially become inoperable.

The extended 14-day AOT is based on the Probabilistic Risk Analysis (PRA) evaluation to perform on-line maintenance of the EDGs when the SEPS is available. The results of the PRA evaluation demonstrate that the SEPS is capable of mitigating the dominant core damage sequences and provides a significant overall risk reduction for station operation. Additionally, the remaining OPERABLE EDG and offsite circuits are adequate to supply electrical power to the onsite Class 1E Distribution System. Furthermore, should a loss of offsite power occur and both EDGs are unable to energize their respective emergency bus, the SEPS alone is adequate to supply electrical power to effect a safe shutdown of the unit.

3/4.8.1 AC SOURCES (Continued)

LIMITING CONDITION FOR OPERATION (LCO) (continued)

c. When in ACTION c., individual redundancy is lost in both the offsite electrical power system and the onsite AC electrical power system. Since power system redundancy is provided by two diverse sources of power, however, the reliability of the power systems in this condition may appear higher than the condition of ACTION e. (loss of both required offsite circuits). This difference in reliability is offset by the susceptibility of this power system configuration to a single bus or switching failure.

ACTION c. also directs the performance of ACTION d. and demonstration of the remaining OPERABLE offsite and onsite power sources, similar to the actions specified in ACTION b., however, demonstration of OPERABILITY for the remaining EDG must be performed in 8 hours. If one power source is restored within 12 hours, power operation continues in accordance with either ACTION a. or ACTION b.

According to Regulatory Guide 1.93 (Ref. 6), operation may continue while in ACTION c. for a period that should not exceed 12 hours. The 12-hour AOT takes into account the capacity and capability of the remaining AC sources, a reasonable time for evaluation and repairs, and the low probability of a DBA occurring during this period.

Following the 12-hour AOT, ACTION c. requires that both diesel generators and both offsite circuits be restored to Operable status within 72 hours. The requirement for restoring both diesel generators to OPERABLE status within 72 hours may be extended to 14 days to perform either extended preplanned maintenance (both preventive and corrective) or extended unplanned corrective maintenance work. Prior to exceeding the 72-hour AOT the SEPS must be available and an operational readiness status check performed in accordance with Technical Requirement (TR) 31. Refer to Bases for ACTION b. for additional information and requirements.

d. ACTION d. is intended to provide assurance that a loss of offsite power condition does not result in a complete loss of safety function of critical features during the period when either an EDG is inoperable (condition addressed in ACTION b.) or when both an EDG and an offsite power source are inoperable (condition addressed in ACTION c.) at the same time. Critical features are designed with redundant safety related trains. Thus, it is necessary to verify OPERABILITY of redundant critical features in a timely manner. The term "verify," as used in this context means to administratively check by examining logs or other information to determine if certain components are out of service for maintenance or other reasons. It does not mean to perform the Surveillance Requirements needed to demonstrate OPERABILITY of the component.

In addition, when in MODE 1, 2, or 3, the turbine driven emergency feedwater pump must also be verified OPERABLE as well. This requirement ensures a diverse emergency feedwater supply to the steam generators should the remaining offsite and onsite power sources subsequently become inoperable.

Redundant required feature failures consist of inoperable features associated with a train, redundant to the train that has an inoperable EDG (i.e., all required systems, subsystems, trains, components and devices dependent on the remaining OPERABLE EDG must be verified OPERABLE as well). The emergency power supply for the required systems, subsystems, trains, components and devices may be used as the primary basis for determining the redundant features–train relationship. Features whose inoperability has been determined to impact both trains should be considered as Train A and Train B related. Manually operated features should use the same train designation as the electrically powered features in the same flowpath.

Discovering one required EDG inoperable coincident with one or more inoperable required

3/4.8.1 AC SOURCES (Continued)

LIMITING CONDITION FOR OPERATION (LCO) (continued)

support or supported features, or both, that are associated with the OPERABLE EDG, results in starting the AOT for ACTION d. The 4-hour AOT from the discovery of these events existing concurrently is acceptable because it minimizes risk while allowing time for restoration before subjecting the unit to transients associated with shutdown.

While in this condition, the remaining OPERABLE EDG and offsite circuits are adequate to supply electrical power to the onsite Class 1E Distribution System. Though, on a component basis, single failure protection for the required feature's function may have been lost, however, the safety function has not been lost.

The 4-hour AOT takes into account the OPERABILITY of the redundant counterpart to the inoperable required feature, the capacity and capability of the remaining AC sources, a reasonable time for evaluation and repairs, and the low probability of a DBA occurring during this period.

If at any time during the existence of this condition (one EDG inoperable), a required feature subsequently becomes inoperable, the 4-hour AOT would begin to be tracked.

e. ACTION e., which applies when two offsite circuits are inoperable, is intended to provide assurance that an event with a coincident single failure will not result in a complete loss of redundant required safety functions

According to Regulatory Guide 1.93 (Ref. 6), operation may continue with two offsite AC power sources inoperable for a period that should not exceed 24 hours. This level of degradation means that the offsite electrical power system does not have the capability to effect a safe shutdown and to mitigate the effects of an accident; however, the onsite AC sources have not been degraded. This level of degradation generally corresponds to a total loss of the immediately accessible offsite power sources.

Because of the normally high availability of the offsite sources, this level of degradation may appear to be more severe than other combinations of two AC sources inoperable that involve one or more EDGs inoperable. However, two factors tend to decrease the severity of this level of degradation:

1. The configuration of the redundant AC electrical power system that remains available is not susceptible to a single bus or switching failure, and
2. The time required to detect and restore an unavailable off site power source is generally much less than that required to detect and restore an unavailable onsite AC source.

With both of the required offsite circuits inoperable, sufficient onsite AC sources are available to maintain the unit in a safe shutdown condition in the event of a DBA or transient. In fact, a simultaneous loss of offsite AC sources, a LOCA and a worst case single failure were postulated as a part of the design basis in the safety analysis. Thus, the 24-hour AOT provides a period of time to effect restoration of one of the offsite circuits commensurate with the importance of maintaining an AC electrical power system capable of meeting its design criteria.

According to Reference 6, with the available offsite AC sources, two less than required by the LCO, operation may continue for 24 hours. If two offsite sources are restored within 24 hours, unrestricted operation may continue. If only one offsite source is restored within 24 hours, power operation continues in accordance with ACTION a.

3/4.8.1 AC SOURCES (Continued)

LIMITING CONDITION FOR OPERATION (LCO) (continued)

f. With Train A and Train B EDGs inoperable, there are no remaining standby AC sources. Thus, with an assumed loss of offsite electrical power, insufficient standby AC sources are available to power the minimum required ESF functions. For this level of degradation, the offsite electrical power system is the only source of AC power available. The risk associated with continued operation for a very short time could be less than that associated with an immediate controlled shutdown (the immediate shutdown could cause grid instability and inadvertent generator trip, which could result in a total loss of AC power); however, the time allowed for continued operation is severely restricted. The intent here is to avoid the risk associated with an immediate controlled shutdown and to minimize the risk associated with this level of degradation.

According to Reference 6, with both EDGs inoperable, operation may continue for a period that should not exceed 2 hours. If one EDG is restored within 2 hours power operation may continue in accordance with ACTION b.

Following the 2-hour AOT, ACTION f. requires that both diesel generators be restored to Operable status within 72 hours. The requirement for restoring both diesel generators to OPERABLE status within 72 hours may be extended to 14 days to perform either extended preplanned maintenance (both preventive and corrective) or extended unplanned corrective maintenance work. Prior to exceeding the 72-hour AOT the SEPS must be available and an operational readiness status check performed in accordance with Technical Requirement (TR) 31. Refer to Bases for ACTION b. for additional information and requirements.

SURVEILLANCE REQUIREMENTS (SR)

The AC sources are designed to permit inspection and testing of important areas and features, especially those that have a standby function, in accordance with 10 CFR 50, Appendix A, GDC 18 (Ref 8). Periodic component tests are supplemented by extensive functional tests during refueling outages (under simulated accident conditions). The SRs for demonstrating the OPERABILITY of the EDGs are in accordance with the recommendations of Regulatory Guide 1.9 (Ref. 3), Regulatory Guide 1.108 (Ref. 9), and Regulatory Guide 1.137 (Ref. 10), as addressed in the UFSAR including exceptions thereto.

Where the SRs discussed herein specify voltage and frequency tolerances, the following is applicable. The minimum steady state output voltage of 3740 Vac is 90% of the nominal 4160 Vac output voltage. This value, which is specified in ANSI C84.1 (Ref 11) allows for voltage drop to the terminals of 4000 V motors whose minimum operating voltage is specified as 90% or 3600 Vac. It also allows for voltage drops to motors and other equipment down through the 120 Vac level where minimum operating voltage is also usually specified as 90% of nameplate rating. The specified maximum steady state output voltage of 4580 Vac is equal to the nominal bus voltage plus 10%. The specified minimum and maximum frequencies of the EDG are 58.8 Hz and 61.2 Hz, respectively. These values are equal to ±2% of the 60 Hz nominal frequency and are derived from the recommendations given in Regulatory Guide 1.9 (Ref. 3).

SR 4.8.1.1.1a

This SR ensures proper circuit continuity for the offsite AC electrical power supply to the onsite distribution network and availability of offsite AC electrical power. The breaker alignment verifies that each breaker is in its correct position to ensure that distribution buses and loads are connected to their preferred power source, and that appropriate independence of offsite circuits is maintained. The 7-day frequency is adequate since breaker position is not likely to change without the operator being aware of it and because its status is displayed in the control room.

3/4.8.1 AC SOURCES (Continued)

SURVEILLANCE REQUIREMENTS (SR) (continued)

SR 4.1.1.1b

Transfer of each 4.16 kV ESF bus power supply from the normal offsite circuit to the alternate offsite circuit demonstrates the OPERABILITY of the alternate circuit distribution network to power the shutdown loads. The transfer circuit is only required to be OPERABLE when the offsite circuit to which it transfers is credited as being OPERABLE. The 18-month frequency of the Surveillance is based on engineering judgment, taking into consideration the unit conditions required to perform the Surveillance, and is intended to be consistent with expected fuel cycle lengths. Operating experience has shown that these components usually pass the SR when performed at the 18-month frequency. Therefore, the frequency was concluded to be acceptable from a reliability standpoint.

SR 4.8.1.1.1.b is modified by footnote * prohibiting performance during MODE 1 or 2. The reason for the Note is that, during operation with the reactor critical, performance of this SR could cause perturbations to the electrical distribution systems that could challenge continued steady state operation and, as a result, unit safety systems.

SR 4.8.1.1.2a through 2.g

These SRs help to ensure the availability of the standby electrical power supply to mitigate DBAs and transients and to maintain the unit in a safe shutdown condition.

SR 4.8.1.1.2 is modified by footnote ** to indicate that all planned EDG starts for the purposes of these surveillances may be preceded by an engine prelube period. This allowance is to minimize wear on moving parts since the EDG does not get lubricated when the engine is not running.

The term "standby condition" used throughout these SRs mean that the diesel engine coolant and oil are being continuously circulated and engine temperature is being maintained consistent with manufacturer recommendations at keep-warm values.

SR 4.8.1.1.2a

Activities to demonstrate EDG OPERABILITY under this SR are to be performed on a STAGGERED TEST BASIS at least once every 31 days. Performance of surveillances on a staggered test basis provides an added measure of assurance that the redundant onsite power sources are OPERABLE and any detected failure during surveillance testing is promptly evaluated to determine if the failure has a common failure mode component to it.

SR 4.8.1.1.2a.1) provides verification that the level of fuel oil in the day tank is at or above the level at which fuel oil is automatically added. The level is expressed as an equivalent volume in gallons, and is selected to ensure adequate fuel oil for a minimum of 1 hour of EDG operation at full load plus 10%. The 31-day frequency is adequate to assure that a sufficient supply of fuel oil is available, since low level alarms are provided and facility operators would be aware of any large uses of fuel oil during this period.

SR 4.8.1.1.2a.2) provides verification that there is an adequate inventory of fuel oil in the storage tanks to support each EDG's operation for 7 days. The 7-day period is sufficient time to place the unit in a safe shutdown condition and to bring in replenishment fuel from an offsite location. The 31-day frequency is adequate to ensure that a sufficient supply of fuel oil is available, since low level alarms are provided and unit operators would be aware of any large uses of fuel oil during this period.

3/4.8.1 AC SOURCES (Continued)

SURVEILLANCE REQUIREMENTS (SR) (continued)

SR 4.8.1.1.2a.3) demonstrates that each required fuel oil transfer pump operates and transfers fuel oil from its associated storage tank to its associated day tank. This is required to support continuous operation of standby power sources. This Surveillance provides assurance that the fuel oil transfer pump is OPERABLE, the fuel oil piping system is intact, the fuel delivery piping is not obstructed, and the controls and control systems for automatic fuel transfer systems are OPERABLE. The 31-day frequency is appropriate since proper operation of fuel transfer systems is an inherent part of EDG OPERABILITY.

SR 4.8.1.1.2a.4) ensures that sufficient lube oil inventory is available to support at least 7 days of operation for each EDG. The 275 gal minimum requirement is based on the EDG manufacturer consumption values for the run time of the EDG. Implicit in this SR is the requirement to verify the capability to transfer the lube oil from its storage location to the EDG, when the EDG lube oil sump does not hold adequate inventory for 7 days of operation without the level reaching the manufacturer recommended minimum level. A 31-day frequency is adequate to ensure that a sufficient lube oil supply is onsite, since EDG starts and run time are closely monitored by the unit staff.

SR 4.8.1.1.2a.5) ensures that the EDG is capable of starting from standby conditions and attaining rated voltage and frequency. Footnote *** allows a modified start procedure to be used in lieu of the 10-12 seconds "fast start" for the EDG. In order to reduce stress and wear on diesel engines, the manufacturer recommends a modified start in which the starting speed of the EDG is limited, warmup is limited to this lower speed, and the EDG is gradually accelerated to synchronous speed prior to loading. Use of the modified start method requires the diesel governor system to be capable of engine idling and gradual acceleration to synchronous speed. When the modified start is not used footnote *** requires that the time, voltage, and frequency tolerances of SR 4.8.1.1.2e) (10 second start) be met. The 31-day frequency for SR 4.8.1.1.2a.5) is consistent with Regulatory Guide 1.9 (Ref. 3), though Seabrook Station is not committed to Regulatory Guide 1.9.

SR 4.8.1.1.2a.6) verifies that the EDG is capable of synchronizing with the offsite electrical system and accepting loads greater than or equal to the equivalent of the maximum expected accident loads. A minimum run time of 60 minutes is required to stabilize engine temperatures, while minimizing the time that the EDG is connected to the offsite source.

To minimize mechanical stress and wear on the diesel engine SR 4.8.1.1.2a.6) is modified by footnote **** that allows EDG loading per the manufacturers recommendations, including a warmup period. In addition, footnote **** states that momentary transients outside the load range, due to changing bus conditions do not invalidate the test. Footnote **** also stipulates a prerequisite requirement for performance of this SR whereby this SR must be preceded by and immediately follow a successful EDG start per SR 4.8.1.1.2a.5) or SR 4.8.1.1.2e to credit satisfactory performance.

Note that although no power factor requirements are established by SR 4.8.1.1.2a.6), the EDG is normally operated at a power factor between 0.8 lagging and 1.0. The 0.8 value is the design rating of the machine, while the 1.0 is an operational limitation to ensure circulating currents are minimized. The load band is provided to avoid routine overloading of the EDG. Routine overloading may result in more frequent tear down inspections in accordance with vendor recommendations in order to maintain EDG OPERABILITY. Similarly, though not stated in footnote ****, momentary kvar transients above the limit do not invalidate the test.

The 31-day frequency for SR 4.8.1.1.2a.6) is consistent with Regulatory Guide 1.9 (Ref. 3).

3/4.8.1 AC SOURCES (Continued)

SURVEILLANCE REQUIREMENTS (SR) (continued)

SR 4.8.1.1.2a.7) ensures that following EDG testing per SR 4.8.1.1.2a.5) and SR 4.8.1.1.2a.6) that the EDG is returned to ready to standby status when offsite power is restored. It also ensures that the auto-start logic is reset to allow the EDG to reload if a subsequent loss of offsite power occurs. The EDG is considered to be in ready to load status when the EDG is at rated speed and voltage, the output breaker is open and can receive an autoclose signal on bus undervoltage, and the load sequence timers are reset.

SR 4.8.1.1.2b and SR 4.8.1.1.2c

Removal of water from the fuel oil day and storage tanks once every 31 days eliminates the necessary environment for bacterial survival. Microbiological fouling is a major cause of fuel oil degradation. There are numerous bacteria that can grow in fuel oil and cause fouling, but all must have a water environment in order to survive. Removal of water is the most effective means of controlling microbiological fouling. In addition, it eliminates the potential for water entrainment in the fuel oil during EDG operation. Water may come from any of several sources, including condensation, ground water, rain water, contaminated fuel oil, and breakdown of the fuel oil by bacteria. Frequent checking for and removal of accumulated water minimizes fouling and provides data regarding the watertight integrity of the fuel oil system. The Surveillance frequencies are established by Regulatory Guide 1.137 (Ref. 10). This SR is for preventative maintenance. The presence of water does not necessarily represent failure of this SR, provided the accumulated water is removed during the performance of this Surveillance.

SR 4.8.1.1.2d

For proper operation of the standby EDGs, it is necessary to ensure the proper quality of the fuel oil. Regulatory Guide 1.137 (Ref. 10) addresses the recommended fuel oil practices as supplemented by ANSI Standards. The SR refers to the Diesel Fuel Oil Testing Program (Specification 6.7.6i) for the verification of new and stored fuel oil properties. The fuel oil properties governed by Specification 6.7.6i are water and sediment content, kinematic viscosity, specific gravity (or API gravity), and impurity level. Technical Requirements Program (TRP) 5.1 implements the requirements of Specification 6.7.6i. The 31-day frequency is acceptable because the fuel oil properties of interest, even if they were not within stated limits, would not have an immediate effect on EDG operation. This Surveillance ensures the availability of high quality fuel oil for the EDGs.

SR 4.8.1.1.2e

This surveillance requires that, at a 184-day frequency, the EDG starts from standby conditions and achieves required voltage and frequency within 10 seconds (a.k.a, "fast start"). The 10-second start requirement supports the assumptions of the design basis LOCA analysis in the UFSAR, Chapter 15 (Ref. 5).

Upper limits for voltage and frequency are not specified during the initial EDG start in order to account for potential overshoot in voltage and frequency because of governor control system characteristics when testing the EDG in an unloaded condition.

Since this SR requires a 10 second start, it is more restrictive than SR 4.8.1.1.2a.5), and it may be performed in lieu of SR 4.8.1.1.2a.5). Associated footnote # allows crediting of this SR for SR 4.8.1.1.2a.5). Additionally, footnote # stipulates that gradual loading per SR 4.8.1.1.2a.6) must immediately follow this surveillance.

In addition to the SR requirements, the time for the EDG to reach steady state operation, unless the modified EDG start method is employed, is periodically monitored and the trend evaluated to identify degradation of governor and voltage regulator performance.

3/4.8.1 AC SOURCES (Continued)

SURVEILLANCE REQUIREMENTS (SR) (continued)

This SR in combination with SR 4.8.1.1.2a.5) help to ensure the availability of the standby electrical power supply to mitigate DBAs and transients and to maintain the unit in a safe shutdown condition.

The 184-day frequency is consistent with Generic Letter 84-15 (Ref. 7) and provides adequate assurance of EDG OPERABILITY, while minimizing degradation resulting from testing.

SR 4.8.1.1.2f

Surveillances carried out under SR 4.8.1.1.2f are activities normally conducted during shutdown at a refueling frequency of every 18 months. The SR is modified by footnote ## which provides a dispensation from the 'during shutdown' requirement provided an evaluation supports the safe conduct of a particular surveillance in a condition or mode that is consistent with safe operation of the plant. This disposition is consistent with Generic Letter 91-04 (Ref. 13).

Note: SR 4.8.1.1.2f.1) and SR 4.8.1.1.2.2f.13) are Not Used.

SR 4.8.1.1.2f.2) demonstrates the EDG load response characteristics and capability to reject the largest single load without exceeding predetermined voltage and frequency limits. This surveillance may be accomplished by either:

a. Tripping the EDG output breaker with the EDG carrying greater than or equal to its associated single largest post-accident load while paralleled to offsite power, or while solely supplying the bus, or

b. Tripping its associated single largest post-accident load with the EDG solely supplying the bus.

If method a. is used the EDG power factor must be in the range of 0.9 which is representative of actual design basis inductive loading.

The voltage and frequency specified are consistent with the design range of the equipment powered by the EDG and are the steady state voltage and frequency values to which the system must recover following load rejection. The 18-month frequency is consistent with the recommendation of Regulatory Guide 1.108 (Ref. 9).

SR 4.8.1.1.2f.3) demonstrates the DG's capability to reject a full load without overspeed tripping or exceeding the predetermined voltage limits. The DG full load rejection may occur because of a system fault or inadvertent breaker tripping. This Surveillance ensures proper engine generator load response under the simulated test conditions. This test simulates the loss of the total connected load that the DG experiences following a full load rejection and verifies that the DG does not trip upon loss of the load. These acceptance criteria provide for DG damage protection. While the DG is not expected to experience this transient during an event and continues to be available, this response ensures that the DG is not degraded for future application, including reconnection to the bus if the trip initiator can be corrected or isolated.

As required by IEEE-387 (Ref. 12), the load rejection test is acceptable if the increase in diesel speed does not exceed 75% of the difference between synchronous speed and the overspeed trip setpoint, or 15% above synchronous speed, whichever is lower.

The 18 month frequency is consistent with the recommendation of Regulatory Guide 1.108 (Ref. 9) and is intended to be consistent with expected fuel cycle lengths.

3/4.8.1 AC SOURCES (Continued)

SURVEILLANCE REQUIREMENTS (SR) (continued)

SR 4.8.1.1.2f.4) demonstrates the as designed operation of the standby power sources during loss of the offsite source, as required by Regulatory Guide 1.108 (Ref. 9), paragraph 2.a.(1). This test verifies all actions encountered from the loss of offsite power, including shedding of the nonessential loads and energization of the emergency buses and respective loads from the EDG. It further demonstrates the capability of the EDG to automatically achieve the required voltage and frequency within the specified time.

The EDG auto-start time of 12 seconds is derived from requirements of the accident analysis to respond to a loss of offsite power event. The Surveillance must be continued for a minimum of 5 minutes in order to demonstrate that all starting transients have decayed and stability is achieved.

The requirement to verify the connection and power supply of permanent and auto-connected shutdown loads is intended to satisfactorily show the relationship of these loads to the EDG loading logic. In certain circumstances, many of these loads cannot actually be connected or loaded without undue hardship or potential for undesired operation. In lieu of actual demonstration of connection and loading of loads, testing and analysis that adequately show the capability of the EDG systems to perform these loading functions is acceptable. This testing may include any series of sequential, overlapping, or total steps so that the entire connection and loading sequence is verified. Similarly, pumps need not be operated at design basis flows since the purpose of the SR is only to verify correct loading sequence.

This SR is modified by footnote ### to allow starting of the diesel engine at or near normal operating temperature in lieu of standby conditions. The reason for the footnote is to minimize wear and tear on the EDGs during testing. Repeated fast starts with the diesel engine starting at a standby condition temperature still contribute to accelerated engine degradation. Starting of the diesel generator from standby conditions, equivalent to the keep-warm systems temperature, would continue to be performed per SR 4.8.1.1.2f.6) (the loss-of-offsite power in conjunction with a SI actuation test signal) which would meet the spirit of Generic Letter 84-15 (Ref. 7). This allowance would also benefit outage planning and scheduling to shorten the length of the outage by not needing to wait for the engine to cool down before starting the next test. In addition, this capability would continue to be verified several times during the 18-month operating cycle when performing the 184-day fast start test per SR 4.8.1.1.2e.

The 18-month frequency is consistent with the recommendations of Regulatory Guide 1.108 (Ref. 9), paragraph 2.a.(1), takes into consideration unit conditions required to perform the Surveillance, and is intended to be consistent with expected fuel cycle lengths.

SR 4.8.1.1.2f.5) demonstrates that the EDG automatically starts and reaches the minimum voltage and frequency requirements within the specified time (10 seconds) from the design basis (LOCA) actuation signal (SI signal) without loss of offsite power, maintains steady-state voltage and frequency within prescribed limits, and operates on standby for at least 5 minutes. The 5-minute period provides sufficient time to demonstrate stability. Upper limits for voltage and frequency are not specified during the initial EDG start in order to account for potential overshoot in voltage and frequency because of governor control system characteristics when testing the EDG in an unloaded condition. The time, voltage and frequency for the EDG to reach steady state operation is periodically monitored and the trend evaluated to identify degradation of governor and voltage regulator performance.

The 18-month frequency takes into consideration unit conditions required to perform the Surveillance and is intended to be consistent with the expected fuel cycle lengths. Operating experience has shown that these components usually pass the SR when performed at the 18-month frequency. The frequency is also consistent with the recommendations of Regulatory Guide 1.108 (Ref. 9) for other EDG surveillance requirements. Therefore, the frequency was concluded to be

3/4.8.1 AC SOURCES (Continued)

SURVEILLANCE REQUIREMENTS (SR) (continued)

acceptable from a reliability standpoint.

This SR is modified by footnote ###, as described in SR 4.8.1.1.2f.4), to minimize wear and tear on the EDGs during testing.

SR 4.8.1.1.2f.6) demonstrates the EDG operation, as discussed in the Bases for SR 4.8.1.1.2f.4), during a loss of offsite power actuation test signal in conjunction with a SI actuation signal. In the event of a DBA coincident with a loss of offsite power, the EDGs are required to supply the necessary power to ESF systems so that the fuel, RCS, and containment design limits are not exceeded. The basis for the EDG auto-start is as discussed in the Bases for SR 4.8.1.1.2f.5). The basis for the EDG loading is as discussed in the Bases for SR 4.8.1.1.2f.4).

The surveillance must be continued for a minimum of 5 minutes in order to demonstrate that all starting transients have decayed and stability is achieved.

The SR is performed with the EDG initially at standby condition, i.e., equivalent to the keep-warm systems temperature. This requirement is consistent with Generic Letter 84-15 (Ref. 7) which notes that the design basis for the plant, i.e., large LOCA coincident with loss of offsite power requires the EDG to be capable of starting from ambient conditions (keep-warm system temperature).

The SR also demonstrates that all automatic protective trip functions (e.g., high jacket water temperature) except, engine overspeed, 4160 volt bus fault, generator differential current, and low lube oil pressure, are bypassed on a loss of voltage signal concurrent with a SI actuation test signal. The noncritical trips are bypassed during DBAs and provide an alarm on an abnormal engine condition. This alarm provides the operator with sufficient time to react appropriately. The EDG availability to mitigate the DBA is more critical than protecting the engine against minor problems that are not immediately detrimental to emergency operation of the EDG.

The 18-month frequency takes into consideration unit conditions required to perform the Surveillance, is intended to be consistent with an expected fuel cycle length of 18 months, and is consistent with the frequency of SR 4.8.1.1.2f.4). Operating experience has shown that these components usually pass the SR when performed at the 18-month frequency. The frequency is also consistent with the recommendations of Regulatory Guide 1.108 (Ref. 9) for other EDG surveillance requirements. Therefore, the frequency was concluded to be acceptable from a reliability standpoint.

SR 4.8.1.1.2f.7) demonstrates that the EDGs can start and run continuously at full load capability for an interval of not less than 24 hours at a load equivalent to 92 - 100 percent of the continuous duty rating of the EDG. The EDG starts for this SR can be performed either from standby or hot conditions. The load band is provided to avoid routine overloading of the EDG. Routine overloading may result in more frequent tear down inspections in accordance with vendor recommendations in order to maintain EDG OPERABILITY.

Should auto-connected loads be added in the future such that the load on the bus reach or exceed the EDG continuous load rating, the EDG must run for a minimum of 2 hours at a load equivalent to 105 – 110 percent the continuous duty rating of the EDG. The remaining hours of the 24-hour run are to be at 92 – 100 percent full load. In addition, the SR requires verification that the auto-connected loads do not exceed the short term rating of the EDG.

Note that although no power factor requirements are established by SR 4.8.1.1.2f.7), the EDG is normally operated at a power factor between 0.8 lagging and 1.0. The 0.8 value is the design rating of the machine, while the 1.0 is an operational limitation to ensure circulating currents are minimized. The load band is provided to avoid routine overloading of the EDG. Routine

3/4.8.1 AC SOURCES (Continued)

SURVEILLANCE REQUIREMENTS (SR) (continued)

overloading may result in more frequent tear down inspections in accordance with vendor recommendations in order to maintain EDG OPERABILITY.

To minimize mechanical stress and wear on the diesel engine SR 4.8.1.1.2f.7) is modified by footnote #### that allows EDG loading per the manufacturers recommendations, including a warmup period. In addition, the footnote states that momentary transients outside the load range, due to changing bus conditions do not invalidate the test. Similarly, though not stated in footnote ####, momentary kvar transients above the limit do not invalidate the test.

The 18-month frequency is consistent with the recommendations of Regulatory Guide 1.108 (Ref 9), paragraph 2.a.(3), takes into consideration unit conditions required to perform the Surveillance, and is intended to be consistent with expected fuel cycle lengths.

SR 4.8.1.1.2f.8) demonstrates that the diesel engine can restart within 5 minutes from a hot condition, such as subsequent to shutdown from normal surveillances, and achieve the minimum required voltage and frequency within 10 seconds and steady-state conditions thereafter. The time, voltage and frequency for the EDG to reach steady state operation is periodically monitored and the trend evaluated to identify degradation of governor and voltage regulator performance.

The requirement that the diesel has operated for at least 2 hours at sufficiently loaded conditions prior to performance of this Surveillance is based on manufacturer recommendations for achieving hot conditions. The load band is provided to avoid routine overloading of the EDG.

The SR is modified by footnote + noting that momentary transients outside the load range, due to changing bus loads, do not invalidate the test.

The 18-month frequency is consistent with the recommendations of Regulatory Guide 1.108 (Ref. 9), paragraph 2.a.(5).

SR 4.8.1.1.2f.9) ensures, as recommended by Regulatory Guide 1.108 (Ref. 9), paragraph 2.a.(6), that the manual synchronization and load transfer (emergency loads) from the EDG to the offsite source can be made and the EDG can be returned to standby status when offsite power is restored. It also ensures that the auto-start logic is reset to allow the EDG to reload if a subsequent loss of offsite power occurs. The EDG is considered to be in standby status when the EDG is aligned for auto-start, the EDG circuit breaker is available for automatic closure, and the emergency power sequencer timer(s) are reset and available for automatic operation.

The three sub-steps do not need to be performed sequentially. It is acceptable to delay performance of sub-step c) to support optimum scheduling of maintenance and surveillance activities so long as the requisite test criteria are met when it is performed.

The 18-month frequency is consistent with the recommendations of Regulatory Guide 1.108 (Ref. 9), paragraph 2.a.(6), and takes into consideration unit conditions required to perform the Surveillance.

SR 4.8.1.1.2f.10) is a demonstration of the test mode override which ensures that EDG availability under accident conditions will not be compromised as a result of testing the EDG while connected to its bus. The EDG is verified to return to standby operation and the emergency loads are automatically energized with offsite power if a SI actuation signal is received during operation in the test mode. Ready to load operation is defined as the EDG running at rated speed and voltage with the EDG output breaker open.

The requirement to automatically energize the emergency loads with offsite power is intended

3/4.8.1 AC SOURCES (Continued)

SURVEILLANCE REQUIREMENTS (SR) (continued)

to show that the emergency loading was not affected by the EDG operation in test mode. In certain circumstances, many of these loads cannot actually be connected or loaded without undue hardship or potential for undesired operation. For instance, ECCS injection valves are not desired to be stroked open, or high pressure injection systems are not capable of being operated at full flow, or RHR systems performing a decay heat removal function are not desired to be realigned to the ECCS mode of operation. In lieu of actual demonstration of connection and loading of loads, testing that adequately shows the capability of the emergency loads to perform these functions is acceptable. This testing may include any series of sequential, overlapping, or total steps so that the entire connection and loading sequence is verified.

The 18-month frequency is consistent with the recommendations of Regulatory Guide 1.108 (Ref. 9), paragraph 2.a.(8), takes into consideration unit conditions required to perform the Surveillance, and is intended to be consistent with expected fuel cycle lengths.

SR 4.8.1.1.2f.11) demonstrates that each required fuel oil transfer pump operates and transfers fuel oil from each storage tank to each EDG day tank via the installed cross-connection lines. This is required to support continuous operation of standby power sources. This Surveillance provides assurance that the fuel oil transfer pump is OPERABLE, the fuel oil piping system is intact, the fuel delivery piping is not obstructed, and the controls and control systems for fuel transfer systems are OPERABLE.

The 18-month frequency for this SR is appropriate to verify this capability since both EDG and associated fuel oil trains are independent and are normally not cross-connected. The cross-connect provision is an installed feature for an enhanced defense-in-depth capability should, in the unlikely event, it become necessary to cross-connect the fuel oil trains.

SR 4.8.1.1.2f.12) ensures that under loss of offsite power conditions, with or without an accident, loads are sequentially connected to the bus by the emergency power sequencer timer. The sequencing logic controls the permissive and starting signals to motor and other load breakers to prevent overloading of the EDGs due to high inrush starting currents. The 10% load sequence time interval tolerance ensures that sufficient time exists for the EDG to restore frequency and voltage prior to applying the next load and that safety analysis assumptions regarding ESF equipment time delays are not violated. Reference 2 provides a summary of the automatic loading of ESF buses.

The 18-month frequency is consistent with the recommendations of Regulatory Guide 1.108 (Ref. 9), paragraph 2.a.(2), takes into consideration unit conditions required to perform the Surveillance, and is intended to be consistent with expected fuel cycle lengths.

SR 4.8.1.1.2f.14) demonstrates that when a Tower Actuation (TA) signal is generated, while the EDG is loaded with its permanently connected loads and auto-connected emergency accident loads, the associated operating service water pump automatically trips and the corresponding cooling tower pump starts and after energization that voltage and frequency of the emergency bus remains within steady-state limits.

The 18-month frequency takes into consideration unit conditions required to perform the Surveillance and is intended to be consistent with the expected fuel cycle lengths. Operating experience has shown that these components usually pass the SR when performed at the 18-month frequency. The frequency is also consistent with the recommendations of Regulatory Guide 1.108 (Ref. 9) for other EDG surveillance requirements. Therefore, the frequency was concluded to be acceptable from a reliability standpoint.

3/4.8.1 AC SOURCES (Continued)

SURVEILLANCE REQUIREMENTS (SR) (continued)

SR 4.8.1.1.2f.15) demonstrates that while EDG 1A is loaded with its permanently connected loads and auto-connected emergency loads, that emergency bus E5 voltage and frequency remain within steady-state limits after manual energization of the 1500 hp startup feedwater pump (the largest manually-connected load).

The 18-month frequency takes into consideration unit conditions required to perform the Surveillance and is intended to be consistent with the expected fuel cycle lengths. Operating experience has shown that these components usually pass the SR when performed at the 18-month frequency. The frequency is also consistent with the recommendations of Regulatory Guide 1.108 (Ref. 9) for other EDG surveillance requirements. Therefore, the frequency was concluded to be acceptable from a reliability standpoint.

SR 4.8.1.1.2g

This surveillance demonstrates that the EDG starting independence has not been compromised. Also, this Surveillance demonstrates that each engine can achieve proper voltage and frequency within 10 seconds then steady-state condition when the EDGs are started simultaneously. The time, voltage and frequency for the EDG to reach steady state operation is monitored and the trend evaluated to identify degradation of governor and voltage regulator performance.

The SR also requires that the EDGs must be started from standby conditions, that is, with the engine coolant and oil continuously circulated and temperature maintained consistent with manufacturer recommendations at keep-warm values.

The 10-year frequency is consistent with the recommendations of RG 1.108 (Ref. 9).

MODES 5 AND 6

During operation in MODEs 5 and 6, the required AC sources include one off-site circuit capable of supplying the on-site Class 1E distribution system and an operable emergency diesel generator. These minimum AC sources ensure that (1) the unit can be maintained in the shutdown condition, (2) sufficient instrumentation and control capability is available for monitoring and maintaining the unit, and (3) adequate AC power is available to mitigate an event postulated to occur during shutdown.

If the minimum required AC sources are not operable, the action statement requires immediately suspending core alternation, positive reactivity changes, movement of irradiated fuel, and crane operation with loads over the fuel pool. With respect to suspending positive reactivity changes, operations that individually add limited, positive reactivity are acceptable when, combined with other actions that add negative reactivity, the overall net reactivity addition is zero or negative. For example, a positive reactivity addition caused by temperature fluctuations from inventory addition or temperature control fluctuations is acceptable if it is combined with a negative reactivity addition such that the overall, net reactivity addition is zero or negative. Refer to TS Bases 3/4.9.1, Boron Concentration, for limits on boron concentration and water temperature for MODE 6 action statements involving suspension of positive reactivity changes.

3/4.8.1 AC SOURCES (Continued)

SURVEILLANCE REQUIREMENTS (SR) (continued)

REFERENCES

1. 10 CFR 50, Appendix A, GDC 17.
2. UFSAR, Chapter 8.
3. Regulatory Guide 1.9, Rev. 3. *
4. UFSAR, Chapter 6.
5. UFSAR, Chapter 15.
6. Regulatory Guide 1.93, Rev. 0, December 1974.
7. Generic Letter 84-15, "Proposed Staff ACTIONs to Improve and Maintain Diesel Generator Reliability," July 2, 1984.
8. 10 CFR 50, Appendix A, GDC 18.
9. Regulatory Guide 1.108, Rev. 1, August 1977.*
10. Regulatory Guide 1.137, Rev. 1, October 1979.*
11. ANSI Std. C84.1
12. IEEE Std. 387-1984**
13. Generic Letter 91-04, April 1991.
14. Regulatory Guide 1.182, May 2000.

3/4.8.2 DC SOURCES

The OPERABILITY of the minimum D.C. power sources during shutdown and refueling ensures that: (1) the facility can be maintained in the shutdown or refueling condition for extended time periods and (2) sufficient instrumentation and control capability is available for monitoring and maintaining the unit status.

With less than the minimum required DC power sources, the action statement requires immediately suspending core alternations, positive reactivity changes, or movement of irradiated fuel. With respect to suspending positive reactivity changes, operations that individually add limited, positive reactivity are acceptable when, combined with other actions that add negative reactivity, the overall net reactivity addition is zero or negative. For example, a positive reactivity addition caused by temperature fluctuations from inventory addition or temperature control fluctuations is acceptable if it is combined with a negative reactivity addition such that the overall, net reactivity addition is zero or negative. Refer to TS Bases 3/4.9.1, Boron Concentration, for limits on boron concentration and water temperature for MODE 6 action statements involving suspension of positive reactivity changes.

---

* Seabrook Station is only committed to demonstrating the OPERABILITY of the diesel generators in accordance with the recommendations of Regulatory Guides 1.9, "Selection of Diesel Generator Set Capacity for Standby Power Supplies," Revision 2, December 1979; 1.108, "Periodic Testing of Diesel Generator Units Used as Onsite Electric Power Systems at Nuclear Power Plants," Revision 1, August 1977, Errata September 1977; and 1.137, "Fuel-Oil Systems for Standby Generators." Revision 1, October 1979. Exceptions to these Regulatory Guides are noted in the UFSAR.

** Seabrook Station is only committed to IEEE Std. 387-1972 and 1977.

3/4.8.2 DC SOURCES (continued)

The Surveillance Requirement for demonstrating the OPERABILITY of the station batteries are based on the recommendations of Regulatory Guide 1.129, "Maintenance Testing and Replacement of Large Lead Storage Batteries for Nuclear Power Plants," February 1978, and IEEE Std. 450-1980, "IEEE Recommended Practice for Maintenance, Testing, and Replacement of Large Lead Storage Batteries for Generating Stations and Substations."

Verifying average electrolyte temperature above the minimum for which the battery was sized, total battery terminal voltage on float charge, connection resistance values, and the performance of battery service and discharge tests ensures the effectiveness of the charging system, the ability to handle high discharge rates, and compares the battery capacity at that time with the rated capacity.

Table 4.8-2 specifies the normal limits for each designated pilot cell and each connected cell for electrolyte level, float voltage, and specific gravity. The limits for the designated pilot cells float voltage and specific gravity, greater than 2.13 volts and 0.015 below the manufacturer's full charge specific gravity or a battery charger current that had stabilized at a low value, is characteristic of a charged cell with adequate capacity. The normal limits for each connected cell for float voltage and specific gravity, greater than 2.13 volts and not more than 0.020 below the manufacturer's full charge specific gravity with an average specific gravity of all the connected cells not more than 0.010 below the manufacturer's full charge specific gravity, ensures the OPERABILITY and capability of the battery.

Operation with a battery cell's parameter outside the normal limit but within the allowable value specified in Table 4.8-2 is permitted for up to 7 days. During this 7-day period: (1) the allowable values for electrolyte level ensures no physical damage to the plates with an adequate electron transfer capability; (2) the allowable value for the average specific gravity of all the cells, not more than 0.020 below the manufacturer's recommended full charge specific gravity, ensures that the decrease in rating will be less than the safety margin provided in sizing; (3) the allowable value for an individual cell's specific gravity, ensures that an individual cell's specific gravity will not be more than 0.040 below the manufacturer's full charge specific gravity and that the overall capability of the battery will be maintained within an acceptable limit; and (4) the allowable value for an individual cell's float voltage, greater than 2.07 volts, ensures the battery's capability to perform its design function.

3/4.8.3 ONSITE POWER DISTRIBUTION

BACKGROUND

The onsite Class 1E AC, DC, and AC vital instrument bus electrical power distribution systems are divided by train into two redundant and independent power distribution subsystems.

The AC electrical power subsystem of each train consists of a Class 1E 4.16 kV emergency bus, 480-volt unit substations, and 120-volt vital instrument panels. Each 4.16 kV emergency bus has at least one separate and independent offsite source of power as well as a dedicated onsite diesel generator (DG) source. Each 4.16 kV emergency bus is normally energized from the unit auxiliary transformer (UAT). The opening of the UAT incoming line breaker, either manually or automatically, initiates an automatic transfer from the UAT to reserve auxiliary transformer (RAT), provided that the RAT transformer is energized. If all offsite sources are unavailable, the onsite

3/4.8.3 ONSITE POWER DISTRIBUTION (continued)

emergency DG supplies power to the 4.16 kV emergency buses. Control power for the 4.16 kV breakers is supplied from the Class 1E batteries.

Although not explicitly contained in TS 3.8.3.1 and 3.8.3.2, the MCCs that support the design function of the on-site AC power system must be energized to permit the functioning of structures, systems, and components important to safety under all normal and accident conditions. The AC distribution system ensures the safety functions of the Reactor Coolant Makeup, Residual Heat Removal, Emergency Core Cooling, Containment Heat Removal, Containment Atmosphere Cleanup, and the Cooling Water Systems can be accomplished. The accident analyses assume that the ESF systems are operable, which includes the availability of necessary power. Consequently, the MCCS that support these functions are required to be energized to maintain operability of the associated ESF systems and components.

No bus ties exist between redundant buses; however, manual bus tie breakers provide the capability to interconnect load center buses within a single train. Bus ties may be used when a unit substation transformer is out of service for maintenance or repair. Bus ties are provided only for operational flexibility. The unit substations are not designed to supply the total load of both buses when bus ties are used. When a bus tie breaker is used, loading on each unit substation will be administratively controlled to be within the rating of the unit substation transformer.

The 120V Vital Instrumentation and Control Power System consists of the uninterruptible power supply (UPS) units and the 120-volt vital instrument panels arranged in two trains. The six vital UPS units are normally powered from the 480V system and can also convert 125-volt DC power from station batteries to 120-volt AC power. These UPS units feed six electrically independent 120-volt AC vital instrument panels which serve as instrument and control power supplies.

The DC electrical power distribution system for each train consists of two 125-volt DC buses.

APPLICABLE SAFETY ANALYSES

The initial conditions of Design Basis Accident (DBA) and transient SAFETY analyses in the UFSAR assume Engineered Safety Features (ESF) systems are OPERABLE. The AC, DC, and DC vital bus electrical power distribution systems are designed to provide sufficient capacity, capability, redundancy, and reliability to ensure the availability of necessary power to ESF systems so that the fuel, Reactor Coolant System, and containment design limits are not exceeded.

The OPERABILITY of the AC, DC, and AC vital bus electrical power distribution systems in MODES 1 through 4 is consistent with the initial assumptions of the accident analyses and is based upon meeting the design basis of the unit. This includes maintaining power distribution systems OPERABLE during accident conditions in the event of:

3/4.8.3 ONSITE POWER DISTRIBUTION (continued)

1. An assumed loss of all offsite power or all onsite AC electrical power, and

2. A worst case single failure.

The OPERABILITY of the minimum AC, DC, and AC vital bus electrical power distribution subsystems during MODES 5 and 6 ensures that:

1. The unit can be maintained in the shutdown or refueling condition for extended periods,

2. Sufficient instrumentation and control capability is available for monitoring and maintaining the unit status, and

3. Adequate power is provided to mitigate events postulated during shutdown.

The AC and DC electrical power distribution systems satisfy Criterion 3 of 10 CFR 50.36(c)(2)(ii).

LCO

The power distribution subsystems required to be OPERABLE in MODES 1 through 4 ensure the availability of AC, DC, and AC vital bus electrical power for the systems required to shut down the reactor and maintain it in a safe condition after an anticipated operational occurrence (AOO) or a postulated design basis accident (DBA). Maintaining the Train A and Train B AC, DC, and AC vital bus electrical power distribution subsystems OPERABLE ensures that the redundancy incorporated into the design of ESF is not defeated. Therefore, a single failure within any system or within the electrical power distribution subsystems will not prevent safe shutdown of the reactor.

In MODES 5 and 6, various subsystems, equipment, and components are required OPERABLE by other LCOs. Implicit in those requirements via the definition of OPERABILITY is the requirement for availability of necessary electrical power. Maintaining the minimum required onsite power distribution system OPERABLE in MODES 5 and 6 ensures the availability of sufficient power to operate the unit in a safe manner to mitigate the consequences of postulated events during shutdown (e.g., fuel handling accidents).

OPERABLE electrical power distribution subsystems require correct breaker alignments and indicated voltage on the required buses. In addition, OPERABLE DC electrical power distribution subsystems require that the 125-volt DC buses be energized from a vital battery in the same train. OPERABLE 120-volt vital instrument panels are required to be energized from the associated inverter connected to its DC bus.

3/4.8.3 ONSITE POWER DISTRIBUTION (continued)

APPLICABILITY

The electrical power distribution subsystems are required to be OPERABLE in MODES 1, 2, 3, and 4 to ensure that:

- Acceptable fuel design limits and reactor coolant pressure boundary limits are not exceeded, and
- Adequate core cooling is provided, and containment OPERABILITY and other vital functions are maintained in the event of a postulated DBA.

The AC and DC electrical power distribution subsystems required to be OPERABLE in MODES 5 and 6 provide assurance that:

- Systems to provide adequate coolant inventory makeup are available for the irradiated fuel in the core,
- Systems needed to mitigate a fuel handling accident are available,
- Systems necessary to mitigate the effects of events that can lead to core damage during shutdown are available, and
- Instrumentation and control capability is available for monitoring and maintaining the unit in a cold shutdown and refueling condition.

ACTIONS

MODES 1 through 4

With the OPERABLE electrical buses less than required by LCO 3.8.3.1 and without a loss of safety function, the remaining electrical power distribution subsystems are capable of supporting the minimum safety functions necessary to shut down the reactor and maintain it in a safe shutdown condition, assuming no single failure. The overall reliability is reduced, however, because a single failure in the remaining power distribution subsystems could result in the minimum required ESF functions not being supported.

When a required electrical bus is not energized, the associated loads, such as ESF components normally powered from the electrical bus, must also be declared inoperable.

3/4.8.3 ONSITE POWER DISTRIBUTION (continued)

ACTIONS (continued)

MODES 5 and 6

With less than the minimum required on-site power distribution systems sources, the action statement requires immediately suspending core alterations, positive reactivity changes, or movement of irradiated fuel. With respect to suspending positive reactivity changes, operations that individually add limited, positive reactivity are acceptable when, combined with other actions that add negative reactivity, the overall net reactivity addition is zero or negative. For example, a positive reactivity addition caused by temperature fluctuations from inventory addition or temperature control fluctuations is acceptable if it is combined with a negative reactivity addition such that the overall, net reactivity addition is zero or negative. Refer to TS Bases 3/4.9.1, Boron Concentration, for limits on boron concentration and water temperature for MODE 6 action statements involving suspension of positive reactivity changes.

SURVEILLANCE REQUIREMENTS

Operability of the required electrical buses is confirmed by verifying correct breaker alignment and indicated voltage on the buses at least once per seven days. The seven-day frequency is based on the capability of the electrical systems and the indications available in the control room that alert the operator to electrical system malfunctions.

3/4.8.4 ELECTRICAL EQUIPMENT PROTECTIVE DEVICES

Containment electrical penetrations and penetration conductors are protected by either deenergizing circuits not required during reactor operation or by demonstrating the OPERABILITY of primary and backup overcurrent protection circuit breakers during periodic surveillance. The Surveillance Requirements applicable to lower voltage circuit breakers provide assurance of breaker reliability by testing at least one representative sample of each manufacturer's brand of circuit breaker. Each manufacturer's air circuit breakers, molded case circuit breakers, and overload devices are grouped into representative samples which are then tested on a rotating basis to ensure that all breakers are tested. If a wide variety exists within any manufacturer's brand of circuit breakers, it is necessary to divide that manufacturer's breakers into groups and treat each group as a separate type of breaker for surveillance purposes.

The OPERABILITY of the motor-operated valves thermal overload protection ensures that the thermal overload protection will not prevent safety-related valves from performing their function. The Surveillance Requirements for demonstrating the OPERABILITY of the thermal overload protection are in accordance with Regulatory Guide 1.106, "Thermal Overload Protection for Electric Motors on Motor Operated Valves," Revision 1, March 1977.

3/4.9.1 BORON CONCENTRATION

The limit on the boron concentrations of the Reactor Coolant System (RCS) and the refueling canal/cavity during refueling ensures that the reactor remains subcritical during MODE 6. During refueling, the spent fuel pool water volumes and the reactor cavity water volumes will be connected when the fuel transfer gate valve is open. This configuration allows the bodies of water to be physically capable of being in contact, however, no effective mixing of the volumes occurs due to the constriction of the fuel transfer tube. The soluble boron concentration in each of these volumes is maintained greater than or equal to the limit specified in the COLR, or equivalent to a K_{eff} less than or equal to 0.95 when the fuel transfer gate is open. However, the spent fuel pool water boron concentration is under administrative controls and not a technical specification. They are independently maintained at the appropriate boron concentration even though no intermixing of significance exists. The mixing caused by the RHR pumps (reactor cavity) or the SFP system pumps assures uniformity of boron in the separate volumes.

The soluble boron concentration offsets the core reactivity and is measured by chemical analysis of a representative sample of the coolant in each of the volumes. Plant procedures ensure the specified boron concentration in order to maintain an overall core reactivity of $k_{eff} \leq 0.95$ during fuel handling, with control rods and fuel assemblies assumed to be in the most adverse configuration (least negative reactivity) allowed by plant procedures.

GDC 26 of 10 CFR 50, Appendix A, requires that two independent reactivity control systems of different design principles be provided. One of these systems must be capable of holding the reactor core subcritical under cold conditions. The Chemical and Volume Control System (CVCS) is the system capable of maintaining the reactor subcritical in cold conditions by maintaining the boron concentration.

The reactor is brought to shutdown conditions before beginning operations to open the reactor vessel for refueling. After the RCS is cooled and depressurized and the vessel head is unbolted, the head is slowly removed to form the refueling cavity. The refueling canal and the refueling cavity are then flooded with borated water from the refueling water storage tank through the open reactor vessel by gravity feeding or by the use of the Residual Heat Removal (RHR) System pumps.

The pumping action of the RHR System in the RCS and the natural circulation due to thermal driving heads in the reactor vessel and refueling cavity mix the added solution of boric acid with the water in the refueling canal. The RHR System is in operation during refueling (see LCO 3.9.8.1, "Residual Heat Removal (RHR) and Coolant Circulation High Water Level," and LCO 3.9.8.2, "Residual Heat Removal (RHR) and Coolant Circulation — Low Water Level") to provide forced circulation in the RCS and assist in maintaining the boron concentrations in the RCS and the refueling canal/cavity at or above the limit specified in LCO 3.9.1.

During refueling operations, the reactivity condition of the core is consistent with the initial conditions assumed for the boron dilution accident in the accident analysis and is conservative for MODE 6. The boron concentration limit specified is based on the core reactivity at the beginning of each fuel cycle (the end of refueling) and includes an uncertainty allowance.

The required boron concentration and the plant refueling procedures that verify the correct fuel loading plan (including full core mapping) ensure that the k_{eff} of the core will remain ≤ 0.95 during the refueling operation. Hence, at least 5% $\Delta k/k$ margin of safety is established during refueling.

Continuation of CORE ALTERATIONS or positive reactivity additions (including actions to reduce boron concentration) is contingent upon maintaining the unit in compliance with the LCO.

During refueling operations water may be transferred to the refueling canal/cavity or the RCS from different sources. Transfers or additions of water whose boron concentration exceeds the required refueling boron concentration are acceptable. Transfers or additions of water where the boron concentration is less than the required refueling boron concentration may be made, provided that these additions are administratively controlled to ensure that the refueling boron concentration requirements continue to be met. That is, the final concentration of boron in the total volume, after the addition of water less than the required refueling boron concentration, exceeds the required refueling boron concentration, or $k_{eff} \leq 0.95$. Also, these administrative controls ensure such transfers or additions of water will not substantially reduce the uniformity of boron concentration in the RCS or refueling canal.

Likewise, transferring water to the RCS or the refueling canal/cavity that is lower in temperature (down to the operability requirements of the RWST in MODE 6; 50 DEG F) than the water contained in those volumes is also acceptable. These minimum requirements for boron concentration and water temperature are also applicable to other MODE 6 Technical Specification ACTIONS that limit operations involving positive reactivity additions to ensure that the reactor remains subcritical and an adequate shutdown margin is maintained.

Suspension of CORE ALTERATIONS and positive reactivity additions shall not preclude moving a component to a safe position. In addition to immediately suspending CORE ALTERATIONS or positive reactivity additions, boration to restore the concentration must be initiated immediately.

In determining the required combination of boration flow rate and concentration, no unique Design Basis Event must be satisfied. The only requirement is to restore the boron concentration to its required value as soon as possible. In order to raise the boron concentration as soon as possible, the operator should begin boration with the best source available for unit conditions. The "equivalent to" statement in the Action is a provision providing an alternate method of emergency boration via the RWST at an increased flow rate to account for the lower boron concentration within the RWST.

Once actions have been initiated, they must be continued until the boron concentration is restored. The restoration time depends on the amount of boron that must be injected to reach the required concentration.

3/4.9.2 INSTRUMENTATION

BACKGROUND

The source range neutron flux monitors are used during refueling operations to monitor the core reactivity condition. The installed source range neutron flux monitors are part of the Nuclear instrumentation System (NIS). These detectors are located external to the reactor vessel and detect neutrons leaking from the core.

The installed source range neutron flux monitors are BF3 detectors operating in the proportional region of the gas filled detector characteristic curve. The detectors monitor the neutron flux in counts per second. The instrument range covers six decades of neutron flux (1 E+6 cps) with an 11.5% instrument accuracy. The detectors also provide continuous visual indication in the control room and an audible count rate in the control room and containment to alert operators to a possible dilution accident. The source range circuitry provides a signal to the Shutdown Margin Monitor (SMM). The SMM provides an audible alarm in the control room to alert operators to a possible dilution accident. The NIS is designed in accordance with the criteria presented in Reference 1.

APPLICABLE SAFETY ANALYSES

Two OPERABLE source range neutron flux monitors are required to provide a signal to alert the operator to unexpected changes in core reactivity such as with a boron dilution accident (Reference 2) or an improperly loaded fuel assembly. The audible count rate from the source range neutron flux monitors provides prompt and definite indication of any boron dilution. The count rate increase is proportional to the subcritical multiplication factor and allows operators to promptly recognize the initiation of a boron dilution event. Prompt recognition of the initiation of a boron dilution event is consistent with the assumptions of the safety analyses and is necessary to assure sufficient time is available for isolation of the primary makeup water source before SHUTDOWN MARGIN is lost (Reference 2).
The source range neutron flux monitors satisfy Criterion 3 of 10 CFR 50/.36(c)(2)(ii).

LIMITING CONDITION FOR OPERATION

This LCO requires that two source range neutron flux monitors be OPERABLE to ensure that redundant monitoring capability is available to detect changes in core reactivity. To be OPERABLE, each monitor must provide visual indication in the control room. In addition, at least one of the two monitors must provide an OPERABLE audible count function to alert the operators to the initiation of a boron dilution event.

3/4.9.2 INSTRUMENTATION (Continued)

APPLICABILITY

In MODE 6, the source range neutron flux monitors must be OPERABLE to determine changes in core reactivity. There are no other direct means available to check core reactivity levels. In MODES 2, 3, 4, and 5, these same installed source range detectors and circuitry are also required to be OPERABLE by LCO 4.3.1.1, "Reactor Trip System Instrumentation."

ACTIONS

A

With only one source range neutron flux monitor OPERABLE, redundancy has been lost. Since these instruments are the only direct means of monitoring core reactivity conditions, CORE ALTERATIONS and any operation that would add positive reactivity must be suspended immediately. Suspending positive reactivity additions that could result in failure to meet the minimum boron concentration limit is required to assure continued safe operation. Introduction of coolant inventory must be from sources that have a boron concentration greater than what would be required in the RCS for minimum refueling boron concentration. This may result in an overall reduction in RCS boron concentration, but provides acceptable margin to maintaining subcritical operation. Performance of Required Action A shall not preclude completion of movement of a component to a safe position.

B

With no source range neutron flux monitor OPERABLE, action to restore a monitor to OPERABLE status shall be initiated immediately. Once initiated, action shall be continued until a source range neutron flux monitor is restored to OPERABLE status.

With no source range neutron flux monitor OPERABLE, there are no direct means of detecting changes in core reactivity. However, since CORE ALTERATIONS and positive reactivity additions are not to be made, the core reactivity condition is stabilized until the source range neutron flux monitors are OPERABLE. This stabilized condition is stabilized until the source range neutron flux monitors are OPERABLE. This stabilized condition is determined by performing SR 4.9.1.2 to ensure that the required boron concentration exists.

The Completion Time of once per 12 hours is sufficient to obtain and analyze a reactor coolant sample for boron concentration and ensures that unplanned changes in boron concentration would be identified. The 12 hour Frequency is reasonable, considering the low probability of a change in core reactivity during this time period.

3/4.9.2 INSTRUMENTATION (Continued)

SURVEILLANCE

SR 4.9.2.a

SR 4.9.2.a is the performance of a CHANNEL CHECK, which is a comparison of the parameter indicated on one channel to a similar parameter on other channels. It is based on the assumption that the two indication channels should be consistent with core conditions. Changes in fuel loading and core geometry can result in significant differences between source range channels, but each channel should be consistent with its local conditions.

The Frequency of 12 hours is consistent with the CHANNEL CHECK Frequency specified similarly for the same instruments in LCO 4.3.1.1.

SR4.9.2b

SR 4.9.2.b is the performance of a CHANNEL CALIBRATION every 18 months. This SR is modified by a Note stating that neutron detectors are excluded from the CHANNEL CALIBRATION. The CHANNEL CALIBRATION for the source range neutron flux monitors consists of obtaining the detector plateau or preamp discriminator curves, evaluating those curves, and comparing the curves to the manufacturer's data. the CHANNEL CALIBRATION also includes verification of the audible count rate function. The 18 month Frequency is based on the need to perform this Surveillance under the conditions that apply during a plant outage. Operating experience has shown these components usually pass the Surveillance when performed at the 18 month Frequency.

REFERENCES

1. 10 CFR 50, Appendix A. GDC 13, GDCP 26, GDC 28, and GDC 29.

2. FSAR, Section 15.4.6

3/4.9.3 DECAY TIME

The minimum requirement for reactor subcriticality prior to movement of irradiated fuel assemblies in the reactor vessel ensures that sufficient time has elapsed to allow the radioactive decay of the short-lived fission products. This decay time is consistent with the assumptions used in the safety analyses.

3/4.9.4 CONTAINMENT BUILDING PENETRATIONS

The Limiting Condition for Operation (LCO) limits the consequences of a fuel handling accident in containment by limiting the potential escape paths for fission product radioactivity released within containment. The LCO requires any penetration providing direct access from the containment atmosphere to the outside atmosphere to be closed except for the OPERABLE containment purge and exhaust penetrations, the approved alternate closure methods and the containment personnel airlock.

For the approved alternate closure methods, the LCO requires that a designated individual must be available to close or direct the remote closure of the penetration in the event of a fuel handling accident. "Available" means stationed at the penetration or performing activities controlled by a procedure on equipment associated with the penetration. The inside containment fuel handling accident analysis provides assurance that manual isolation of penetration valves up to a 12-inch diameter size, within the assumed time, can be attained with the use of a designated individual. With respect to the 36-inch diameter CAP valves, a designated individual is not allowed since manual closure would most likely exceed the assumed closure time.

For the personnel airlocks (containment or equipment hatch), the LCO ensures that the airlock can be closed after containment evacuation in the event of a fuel handling accident. The requirement that the airlock door is capable of being closed requires that the door can be closed and is not blocked by objects that cannot be easily and quickly removed. As an example, the use of removable protective covers for the door seals and sealing surfaces is permitted. The requirement for a designated individual located outside of the airlock area available to close the door following evacuation of the containment will minimize the release of radioactive material.

The fuel handling accident analysis inside containment assumes all of the available activity is assumed to be released instantaneously from the containment to the atmosphere.

The OPERABILITY of the Containment Purge and Exhaust Isolation System ensures that the containment vent and purge penetrations will be automatically isolated upon detection of high radiation levels within the containment. The OPERABILITY of this system is required to restrict the release of radioactive material from the containment atmosphere to the environment.

As described in the fuel handling analysis, there will be no pressurization of containment. Therefore, the requirements to isolate the containment from the outside atmosphere can be less stringent. The LCO requirements during movement of recently irradiated fuel assemblies within the containment are referred to as "containment closure" rather than containment OPERABILITY. The term "recently irradiated" fuel assemblies is defined as fuel that has occupied part of a critical reactor core within the previous 80 hours. For the containment to be OPERABLE, CONTAINMENT INTEGRITY must be maintained. Containment closure means that all potential release paths are closed or capable of being closed. Closure restrictions must be sufficient to provide a barrier to restrict radioactive material released from a fuel element rupture during refueling operations.

3/4.9.4 CONTAINMENT BUILDING PENETRATIONS (Continued)

During the movement of non-recently irradiated fuel assemblies within the containment, there are no specific requirements for containment building penetration closure and OPERABILITY to ensure that a release of fission product radioactivity with containment will be restricted from leaking to the environment. However, it is necessary to maintain the ability to isolate containment penetrations to meet the applicable action statement requirements of TS 3.9.8.1 and 3.9.8.2 in the event that no OPERABLE RHR loops are in operation. During the movement of non-recently irradiated fuel assemblies, the containment outage door may be installed as an alternative to installing the containment equipment hatch with a minimum of four bolts provided:

1. the reactor vessel upper internals have been removed; and

2. the water level above the top of the reactor vessel flange is greater than or equal to 23 feet.

The containment outage door will be designed to ensure a release of fission product radioactivity within containment will be restricted from leaking to the environment due to a fuel handling accident during refueling operations. When the containment outage door is installed and being used for containment closure in lieu of the equipment hatch, the following additional administrative requirements must be met:

1. The containment outage door will be installed and capable of being closed within 1 hour.

2. Hoses and cables being run through the containment outage door will employ a means to allow safe, quick disconnection or severance.

3. A designated individual is available and in direct communication with the control room with the responsibility for the expeditious closure (within 1 hour) of the containment outage door in the event of a fuel handling accident.

3/4.9.5 (THIS SPECIFICATION NUMBER IS NOT USED.)

3/4.9.6 (THIS SPECIFICATION NUMBER IS NOT USED.)

3/4.9.7 (THIS SPECIFICATION NUMBER IS NOT USED.)

3/4.9.8 RESIDUAL HEAT REMOVAL AND COOLANT CIRCULATION

The requirement that at least one residual heat removal (RHR) loop be in operation ensures that: (1) sufficient cooling capacity is available to remove decay heat and maintain the water in the reactor vessel below 140°F as required during the REFUELING MODE, and (2) sufficient coolant circulation is maintained through the core to minimize the effect of a boron dilution incident and prevent boron stratification.

The requirement to have two RHR loops OPERABLE when there is less than 23 feet of water above the reactor vessel flange ensures that a single failure of the operating RHR loop will not result in a complete loss of residual heat removal capability. However, only one RHR loop is required for decay heat removal with water level at least 23 feet above the reactor vessel flange and the upper internals removed from the reactor vessel. The large volume of water above the flange provides backup decay heat removal capability.

Administrative controls ensure two RHR loops are maintained operable with water level ≥ 23 feet above the flange when the upper internals are installed in the reactor vessel. The upper internals provide a flow restriction between the core region and the cavity such that the water volume above the flange may not support effective core cooling following a loss of the operating RHR loop with the internals installed. Following a loss of RHR with the upper internals installed, boiling in the core and core uncovery are possible while the cavity water remains relatively cool. As a result, maintaining two RHR loops operable provides back up cooling capability in the event of a failure of the operating RHR loop.

Closure of the Equipment Hatch containment penetration using the Containment Outage Door may satisfy the containment closure requirement of the action statements for Technical Specifications 3.9.8.1 and 3.9.8.2, when the Containment Outage Door is being used during the movement of non-recently irradiated fuel assemblies within containment in lieu of the Containment Equipment Hatch.

3/4.9.9 (THIS SPECIFICATION NUMBER IS NOT USED.)

3/4.9.10 and 3/4.9.11 WATER LEVEL - REACTOR VESSEL and STORAGE POOL

The restrictions on minimum water level ensure that sufficient water depth is available to remove 99% of the assumed 10% iodine gap activity released from the rupture of an irradiated fuel assembly. The minimum water depth is consistent with the assumptions of the safety analysis. Suspending fuel movement or crane operation does not preclude moving a component to a safe location.

3/4.9.12 FUEL STORAGE BUILDING EMERGENCY AIR CLEANING SYSTEM

The limitations on the Fuel Storage Building Emergency Air Cleaning System ensure that all radioactive material released from an irradiated fuel assembly will be filtered through the HEPA filters and charcoal adsorber prior to discharge to the atmosphere. Operation of the system with the heaters operating for at least 10 continuous hours in a 31-day period is sufficient to reduce the buildup of moisture on the adsorbers and HEPA filters. The OPERABILITY of this system and the resulting iodine removal capacity are consistent with the assumptions of the safety analyses. ANSI N510-1980 will be used as a procedural guide for surveillance testing. Suspending fuel movement or crane operation does not preclude moving a component to a safe location.

3/4.9.13 SPENT FUEL ASSEMBLY STORAGE

Restrictions on placement of fuel assemblies of certain enrichments within the Spent Fuel Pool is dictated by Figure 3.9-1. These restrictions ensure that the K_{eff} of the Spent Fuel Pool will always remain less than 0.95 assuming the pool to be flooded with unborated water. The restrictions delineated in Figure 3.9-1 and the action statement are consistent with the criticality safety analysis performed for the Spent Fuel Pool as documented in the FSAR.

3/4.9.14 NEW FUEL ASSEMBLY STORAGE

Restrictions on placement of fuel assemblies of certain enrichments within the New Fuel Storage Vault is dictated by Specification 3/4.9.14. These restrictions ensure that the K_{eff} of the New Fuel Storage Vault will always remain less than 0.95 assuming the area to be flooded with unborated water. In addition, these restrictions ensure that the K_{eff} of the New Fuel Storage Vault will always remain less than 0.98 when aqueous foam moderation is assumed. The restrictions delineated in Specification 3/4.9.14 and the action statement are consistent with the criticality safety analysis performed for the New Fuel Storage Vault as documented in the FSAR.

3/4.10.1 SHUTDOWN MARGIN

This special test exception provides that a minimum amount of control rod worth is immediately available for reactivity control when tests are performed for control rod worth measurement. This special test exception is required to permit the periodic verification of the actual versus predicted core reactivity condition occurring as a result of fuel burnup or fuel cycling operations.

3/4.10.2 GROUP HEIGHT, INSERTION, AND POWER DISTRIBUTION LIMITS

This special test exception permits individual control rods to be positioned outside of their normal group heights and insertion limits during the performance of such PHYSICS TESTS as those required to: (1) measure control rod worth and (2) determine the reactor stability index and damping factor under xenon oscillation conditions.

3/4.10.3 PHYSICS TESTS

This special test exception permits PHYSICS TESTS to be performed at less than or equal to 5% of RATED THERMAL POWER with the RCS T_{avg} slightly lower than normally allowed so that the fundamental nuclear characteristics of the core and related instrumentation can be verified. In order for various characteristics to be accurately measured, it is at times necessary to operate outside the normal restrictions of these Technical Specifications. For instance, to measure the moderator temperature coefficient at BOL, it is necessary to position the various control rods at heights which may not normally be allowed by Specification 3.1.3.6 and the RCS T_{avg} may be below the minimum temperature of Specification 3.1.1.4 during the measurement.

3/4.10.4 (THIS SPECIFICATION NUMBER IS NOT USED)

3/4.10.5 POSITION INDICATION SYSTEM - SHUTDOWN

This special test exception permits the Position Indication Systems to be inoperable during rod drop time measurements. The exception is required since the data necessary to determine the rod drop time are derived from the induced voltage in the position indicator coils as the rod is dropped. This induced voltage is small compared to the normal voltage and, therefore, cannot be observed if the Position Indication Systems remain OPERABLE.

3/4.11.1 LIQUID EFFLUENTS

3/4.11.1.1 (THIS SPECIFICATION NUMBER IS NOT USED)

3/4.11.1.2 (THIS SPECIFICATION NUMBER IS NOT USED)

LIQUID EFFLUENTS

3/4.11.1.2 (THIS SPECIFICATION NUMBER IS NOT USED

3/4.11.1.3 (THIS SPECIFICATION NUMBER IS NOT USED)

3/4.11.1.4 LIQUID HOLDUP TANKS

The temporary tanks include all those outdoor radwaste tanks that are not surrounded by liners, dikes, or walls capable of holding the tank contents and that do not have tank overflows and surrounding area drains connected to the Liquid Radwaste Treatment System.

Restricting the quantity of radioactive material contained in the specified tanks provides assurance that in the event of an uncontrolled release of the tank's contents, the resulting concentrations would be less than the limits of 10 CFR Part 20, Appendix B, Table II, Column 2, at the nearest potable water supply and the nearest surface water supply in an UNRESTRICTED AREA.

3/4.11.2 GASEOUS EFFLUENTS

3/4.11.2.1 (THIS SPECIFICATION NUMBER IS NOT USED)

GASEOUS EFFLUENTS

3/4.11.2.1 (THIS SPECIFICATION NUMBER IS NOT USED)

3/4.11.2.2 (THIS SPECIFICATION NUMBER IS NOT USED)

3/4.11.2.3 (THIS SPECIFICATION NUMBER IS NOT USED)

GASEOUS EFFLUENTS

3/4.11.2.3 (THIS SPECIFICATION NUMBER IS NOT USED)

3/4.11.2.4 (THIS SPECIFICATION NUMBER IS NOT USED)

GASEOUS EFFLUENTS

3/4.11.2.5 EXPLOSIVE GAS MIXTURE FOR THE GASEOUS RADWASTE SYSTEM

This specification is provided to ensure that the concentration of potentially explosive gas mixtures contained in the GASEOUS RADWASTE SYSTEM is maintained below the flammability limits of hydrogen and oxygen. Maintaining the concentration of hydrogen and oxygen below their flammability limits provides assurance that the releases of radioactive materials will be controlled in conformance with the requirements of General Design Criterion 60 of Appendix A to 10 CFR Part 50.

3/4.11.3 (THIS SPECIFICATION NUMBER IS NOT USED)

3/4.11.4 (THIS SPECIFICATION NUMBER IS NOT USED)

BASES

3/4.12.1 (THIS SPECIFICATION NUMBER IS NOT USED)

3/4.12.2 (THIS SPECIFICATION NUMBER IS NOT USED)

3/4.12.3 (THIS SPECIFICATION NUMBER IS NOT USED)

SECTION 5.0

DESIGN FEATURES

5.0 DESIGN FEATURES

5.1 SITE

EXCLUSION AREA

5.1.1 The Exclusion Area shall be as shown in Figure 5.1-1.

LOW POPULATION ZONE

5.1.2 The Low Population Zone shall be as shown in Figure 5.1-2.

MAPS DEFINING UNRESTRICTED AREAS AND SITE BOUNDARY FOR RADIOACTIVE GASEOUS AND LIQUID EFFLUENTS

5.1.3 Information regarding radioactive gaseous and liquid effluents, which will allow identification of structures and release points as well as definition of UNRESTRICTED AREAS within the SITE BOUNDARY that are accessible to MEMBERS OF THE PUBLIC, shall be shown in Figures 5.1-1 and 5.1-3, respectively.

The definition of UNRESTRICTED AREA used in implementing these Technical Specifications has been expanded over that in 10 CFR 20.3(a)(17). The UNRESTRICTED AREA boundary may coincide with the Exclusion (fenced) Area boundary, as defined in 10 CFR 100.3(a), but the UNRESTRICTED AREA does not include areas over water bodies. The concept of UNRESTRICTED AREAS, established at or beyond the SITE BOUNDARY, is utilized in the Limiting Conditions for Operation to keep levels of radioactive materials in liquid and gaseous effluents as low as is reasonably achievable, pursuant to 10 CFR 50.36a.

5.2 CONTAINMENT

CONFIGURATION

5.2.1 The containment building is a steel-lined, reinforced concrete building of cylindrical shape, with a dome roof and having the following design features:

a. Nominal inside diameter = 140 feet.

b. Nominal inside height = 219 feet.

c. Minimum thickness of concrete walls = 4 feet 6 inches.

d. Minimum thickness of concrete dome = 3 feet 6 inches.

e. Minimum thickness of concrete floor pad = 10 feet.

f. Nominal thickness of steel liner = 1/4, 3/8, and 1/2 inch for the floor, wall, and dome, respectively.

g. Net free volume = 2.704×10^6 cubic feet.

[THIS PAGE LEFT BLANK INTENTIONALLY]

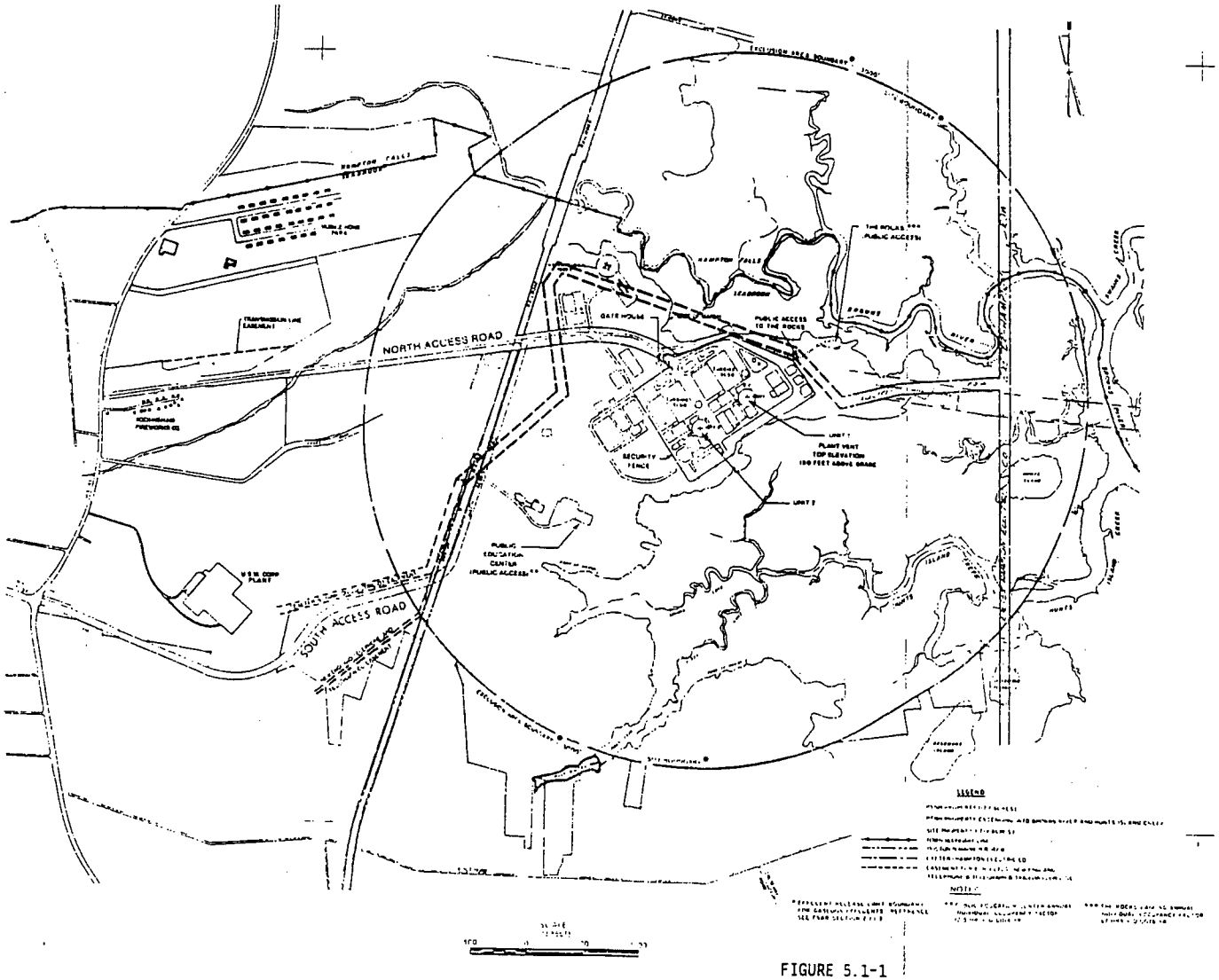

FIGURE 5.1-1

SITE AND EXCLUSION AREA BOUNDARY

[THIS PAGE LEFT BLANK INTENTIONALLY]

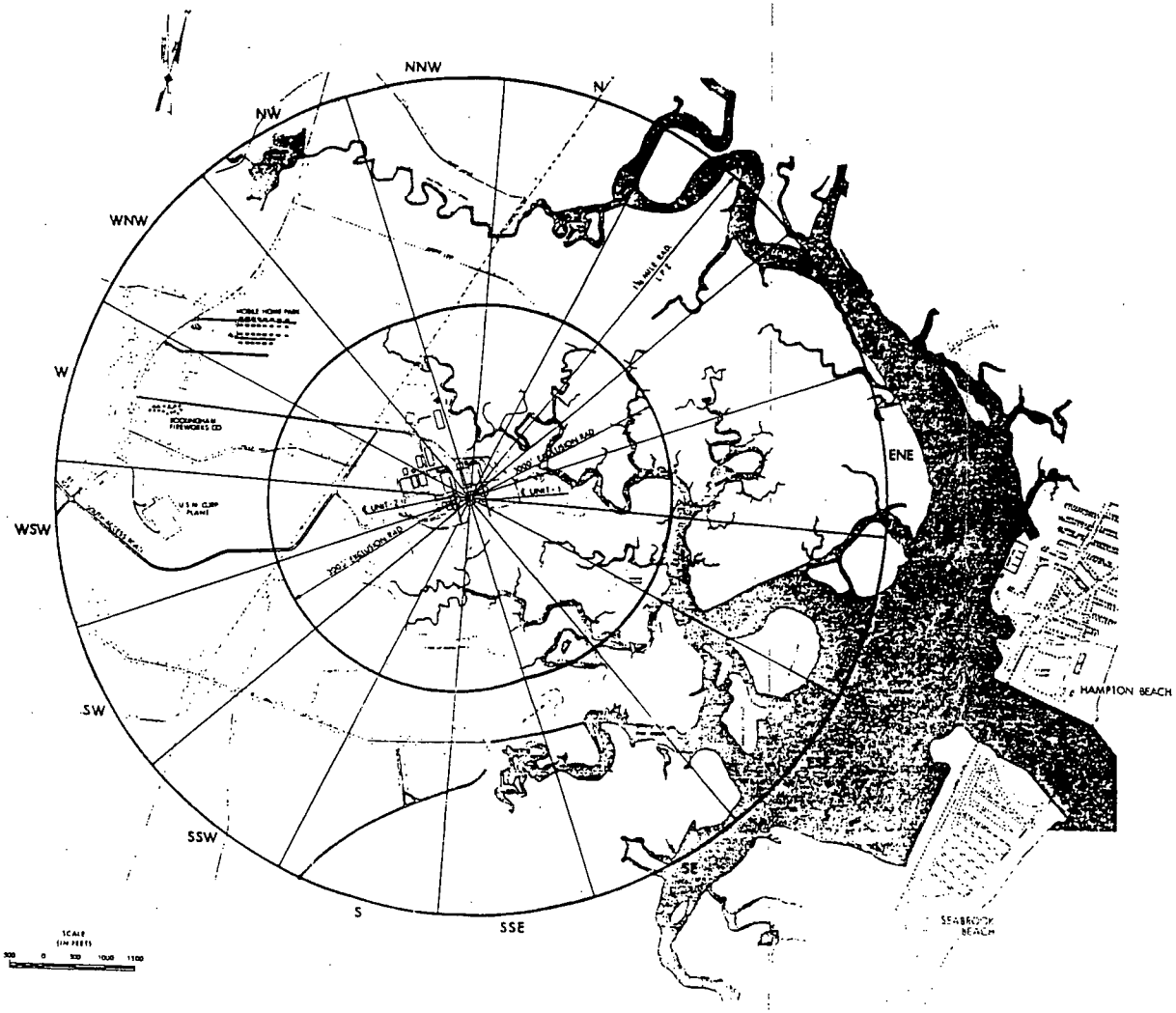

FIGURE 5.1-2

LOW POPULATION ZONE

[THIS PAGE LEFT BLANK INTENTIONALLY]

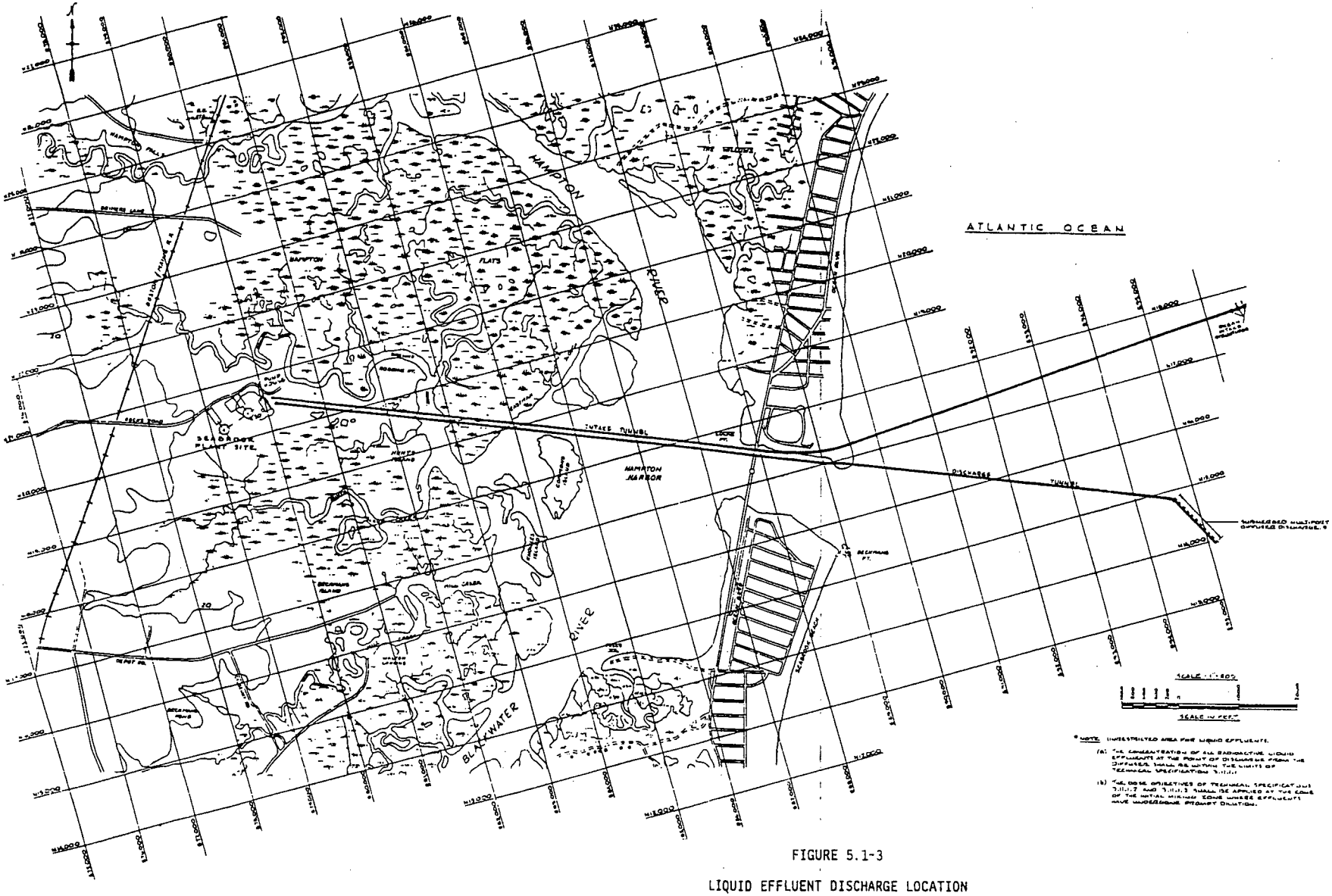

FIGURE 5.1-3

LIQUID EFFLUENT DISCHARGE LOCATION

[THIS PAGE LEFT BLANK INTENTIONALLY]

DESIGN PRESSURE AND TEMPERATURE

5.2.2 The containment building is designed and shall be maintained for a maximum internal pressure of 52.0 psig and a temperature of 296°F.

5.3 REACTOR CORE

FUEL ASSEMBLIES

5.3.1 The reactor shall contain 193 fuel assemblies. Each assembly shall consist of a matrix of cylindrical ZIRLO or Zircaloy-4 clad fuel rods with an initial composition of natural or slightly enriched uranium dioxide (UO_2) as fuel material. Limited substitutions of zirconium alloy or stainless steel filler rods for fuel rods, in accordance with NRC-approved applications of fuel rod configurations, may be used. Fuel assemblies shall be limited to those fuel designs that have been analyzed with applicable NRC staff-approved codes and methods and shown by tests or analyses to comply with all fuel safety design bases. A limited number of lead test assemblies that have not completed representative testing may be placed in nonlimiting core regions. Reload fuel shall be similar in physical design to the initial core loading and shall have a maximum enrichment of 5.0 weight percent U-235.

CONTROL ROD ASSEMBLIES

5.3.2 The core shall contain 57 full-length control rod assemblies. The full-length control rod assemblies shall contain a nominal 142 inches of absorber material. The nominal values of absorber material shall be 80% silver, 15% indium, and 5% cadmium. All control rods shall be clad with stainless steel tubing.

5.4 REACTOR COOLANT SYSTEM

DESIGN PRESSURE AND TEMPERATURE

5.4.1 The Reactor Coolant System is designed and shall be maintained:

a. In accordance with the Code requirements specified in Section 5.2 of the FSAR, with allowance for normal degradation pursuant to the applicable Surveillance Requirements,

b. For a pressure of 2485 psig, and

c. For a temperature of 650°F, except for the pressurizer which is 680°F.

VOLUME

5.4.2 The total water and steam volume of the Reactor Coolant System is 12,255 cubic feet at a nominal T_{avg} of 588.5°F.

5.5 (THIS SPECIFICATION NUMBER IS NOT USED)

5.6 FUEL STORAGE

CRITICALITY

5.6.1.1 The spent fuel storage racks are designed and shall be maintained with:

a. A k_{eff} equivalent to less than or equal to 0.95 when flooded with unborated water, which includes margin for uncertainty in calculation methods and mechanical tolerances with a 95% probability at a 95% confidence level.

b. A nominal 10.35 inch center-to-center distance between fuel assemblies placed in the storage racks.

5.6.1.2 The new fuel storage racks are designed and shall be maintained with:

a. A k_{eff} equivalent to less than or equal to 0.95 when flooded with unborated water, which includes margin for uncertainty in calculational methods and mechanical tolerances with a 95% probability at a 95% confidence level.

b. A k_{eff} equivalent to less than or equal to 0.98 when aqueous foam moderation is assumed, which includes margin for uncertainty in calculational methods and mechanical tolerances with a 95% probability at a 95% confidence level.

c. A nominal 21 inch center-to-center distance between fuel assemblies placed in the storage racks.

DRAINAGE

5.6.2 The spent fuel storage pool is designed and shall be maintained to prevent inadvertent draining of the pool below elevation 14 feet 6 inches.

CAPACITY

5.6.3 The spent fuel storage pool is designed and shall be maintained with a storage capacity limited to no more than 1236 fuel assemblies.

5.7 COMPONENT CYCLIC OR TRANSIENT LIMIT

5.7.1 The components identified in Table 5.7-1 are designed and shall be maintained within the cyclic or transient limits of Table 5.7-1.

TABLE 5.7-1

COMPONENT CYCLIC OR TRANSIENT LIMITS

COMPONENT	CYCLIC OR TRANSIENT LIMIT	DESIGN CYCLE OR TRANSIENT
Reactor Coolant System	200 heatup cycles at ≤ 100°F/h and 200 cooldown cycles at ≤ 100°F/h	Heatup cycle - T_{avg} from ≤ 200°F to ≥ 550°F. Cooldown cycle - T_{avg} from ≥ 550°F to ≤ 200°F.
	200 pressurizer cooldown cycles at ≤ 200°F/h.	Pressurizer cooldown cycle temperatures from ≥ 650°F to ≤ 200°F.
	80 loss of load cycles, without immediate Reactor trip.	≥ 15% of RATED THERMAL POWER to 0% of RATED THERMAL POWER.
	40 cycles of loss-of-offsite A.C. electrical power.	Loss-of-offsite A.C. electrical ESF Electrical System.
	80 cycles of loss of flow in one reactor coolant loop.	Loss of only one reactor coolant pump.
	400 Reactor trip cycles.	100% to 0% of RATED THERMAL POWER.
	10 auxiliary spray actuation cycles.	Spray water temperature differential > 320°F.
	200 leak tests.	Pressurized to ≥ 2250 psig.
	10 hydrostatic pressure tests.	Pressurized to ≥ 3106 psig.
Secondary Coolant System	1 steam line break.	Break in a > 6-inch steam line.
	10 hydrostatic pressure tests.	Pressurized to ≥ 1481 psig.

SECTION 6.0

ADMINISTRATIVE CONTROLS

SECTION 6.0

ADMINISTRATIVE CONTROLS

6.1 RESPONSIBILITY

6.1.1 The Station Director shall be responsible for overall station operation and shall delegate in writing the succession to this responsibility during his absence.

6.1.2 The Shift Manager (or during his absence from the control room, a designated individual) shall be responsible for the control room command function. A management directive to this effect, signed by the Site Vice President shall be reissued to all station personnel on an annual basis.

6.2 ORGANIZATION

6.2.1 OFFSITE AND ONSITE ORGANIZATIONS

Onsite and offsite organizations shall be established for unit operation and corporate management, respectively. The onsite and offsite organizations shall include the positions for activities affecting the safety of the nuclear power plant.

a. Lines of authority, responsibility, and communication shall be established and defined for the highest management levels through intermediate levels to and including all operating organization positions. These relationships shall be documented and updated, as appropriate, in the form of organization charts, functional descriptions for departmental responsibilities and relationships, and job descriptions for key personnel positions, or in equivalent forms of documentation. These requirements shall be documented in the FSAR and updated in accordance with the requirements of 10 CFR 50.71.

b. The Station Director shall be responsible for overall unit safe operation and shall have control over those onsite activities necessary for safe operation and maintenance of the plant.

c. The Site Vice President shall have corporate responsibility for overall plant nuclear safety and shall take any measures needed to ensure acceptable performance of the staff in operating, maintaining, and providing technical support to the plant to ensure nuclear safety.

d. The individuals who train the operating staff and those who carry out health physics and quality assurance functions may report to the appropriate onsite manager; however, they shall have sufficient organizational freedom to ensure their independence from operating pressures.

6.2.2 STATION STAFF

a. Each on-duty shift shall be composed of at least the minimum shift crew composition shown in Table 6.2-1;

b. At least one licensed Operator shall be in the control room when fuel is in the reactor. In addition, while the unit is in MODE 1, 2, 3, or 4, at least one licensed Senior Operator shall be in the control room;

c. A Health Physics Technician* shall be on site when fuel is in the reactor;

d. All CORE ALTERATIONS shall be observed and directly supervised by either a licensed Senior Operator or licensed Senior Operator Limited to Fuel Handling who has no other concurrent responsibilities during this operation; and

e. Administrative procedures shall be developed and implemented to limit the working hours of station staff who perform safety-related functions, e.g., licensed Senior Operators, licensed Operators, health physicists, auxiliary operators, and key maintenance personnel. The amount of overtime worked by station staff members performing safety-related functions shall be limited in accordance with the NRC Policy Statement on working hours (Generic Letter No. 82-12).

f. The Operations Manager shall have held a Senior Reactor Operator license for Seabrook Station prior to assuming the Operations Manager position.

g. The Assistant Operations Manager shall hold a senior reactor operator license.

*The Health Physics Technician may be less than the minimum requirements for a period of time not to exceed 2 hours, in order to accommodate unexpected absence, provided immediate action is taken to fill the required positions.

TABLE 6.2-1

MINIMUM SHIFT CREW COMPOSITION[1]

POSITION	NUMBER OF INDIVIDUALS REQUIRED TO FILL POSITION	
	MODE 1, 2, 3, or 4	MODE 5 or 6
SM[2,4]	1	1
SRO[4]	1	None
RO	2	1
NSO	2	1
STA	1[3]	None

SM - Shift Manager with a Senior Reactor Operator license on Unit 1
SRO - Individual with a Senior Reactor Operator license on Unit 1
RO - Individual with an Operator license on Unit 1
NSO - Nuclear Systems Operator
STA - Shift Technical Advisor

TABLE NOTATIONS

(1) The shift crew composition may be one less than the minimum requirements of Table 6.2-1 for a period of time not to exceed 2 hours in order to accommodate unexpected absence of on-duty shift crew members provided immediate action is taken to restore the shift crew composition to within the minimum requirements of Table 6.2-1. This provision does not permit any shift crew position to be unmanned upon shift change due to an oncoming shift crewperson being late or absent.

(2) During any absence of the Shift Manager from the control room while the unit is in MODE 1, 2, 3, or 4, an individual with a valid Senior Operator license shall be designated to assume the control room command function. During any absence of the Shift Manager from the control room while the unit is in MODE 5 or 6, an individual with a valid Senior Operator license or Operator license shall be designated to assume the control room command function.

(3) The STA position shall be manned in MODES 1, 2, 3, and 4 unless the Shift Manager or the individual with a Senior Operator license meets the qualifications for the STA as required by the NRC.

(4) While the unit is in MODE 1, 2, 3 or 4, a licensed senior operator, either the SM or SRO, shall be on shift having had at least 6 months of hot operating experience.

6.2.3 (THIS SPECIFICATION NUMBER IS NOT USED)

6.2.4 SHIFT TECHNICAL ADVISOR

6.2.4.1 The Shift Technical Advisor shall provide advisory technical support to the Control Room Commander in the areas of thermal hydraulics, reactor engineering, and plant analysis with regard to the safe operation of the station.

6.3 (THIS SPECIFICATION NUMBER IS NOT USED)

6.4 (THIS SPECIFICATION NUMBER IS NOT USED)

6.5 (THIS SPECIFICATION NUMBER IS NOT USED)

6.6 SAFETY LIMIT VIOLATION

The following actions shall be taken in the event a Safety Limit is violated:

a. The NRC Operations Center shall be notified by telephone as soon as possible and in all cases within 1 hour. The Site Vice President and the CNRB shall be notified within 24 hours;

b. A Safety Limit Violation Report shall be prepared. The report shall be reviewed by the SORC. This report shall describe: (1) applicable circumstances preceding the violation, (2) effects of the violation upon facility components, systems, or structures, and (3) corrective action taken to prevent recurrence;

c. The Safety Limit Violation Report shall be submitted to the Commission, the CNRB, and the Site Vice President within 14 days of the violation; and

d. Operation of the station shall not be resumed until authorized by the Commission.

6.7 PROCEDURES AND PROGRAMS

6.7.1 Written procedures shall be established, implemented, and maintained covering the activities referenced below:

a. The applicable procedures recommended in Appendix A of Regulatory Guide 1.33, Revision 2, February 1978;

b. The emergency operating procedures required to implement the requirements of NUREG-0737 and Supplement 1 to NUREG-0737 as stated in Generic Letter No. 82-33;

c. Not used;

d. Not used;

e. PROCESS CONTROL PROGRAM implementation;

f. OFFSITE DOSE CALCULATION MANUAL implementation;

g. Quality Assurance Program for effluent and environmental monitoring;

h. Fire Protection Program implementation; and

i. Technical Specification Improvement Program implementation.

6.7.2 (THIS SPECIFICATION NUMBER IS NOT USED)

6.7.3 (THIS SPECIFICATION NUMBER IS NOT USED)

6.7.4 (THIS SPECIFICATION NUMBER IS NOT USED)

6.7.5 (THIS SPECIFICATION NUMBER IS NOT USED)

PROCEDURES AND PROGRAMS

6.7.6 The following programs shall be established, implemented, and maintained:

a. Primary Coolant Sources Outside Containment

A program to reduce leakage from those portions of systems outside containment that could contain highly radioactive fluids during a serious transient or accident to as low as practical levels. The systems include the RHR and containment spray, Safety Injection, chemical and volume control. The program shall include the following:

1) Preventive maintenance and periodic visual inspection requirements, and

2) Integrated leak test requirements for each system at refueling cycle intervals or less.

b. In-Plant Radiation Monitoring

A program that will ensure the capability to accurately determine the airborne iodine concentration in vital areas under accident conditions. This program shall include the following:

1) Training of personnel,

2) Procedures for monitoring, and

3) Provisions for maintenance of sampling and analysis equipment.

c. Secondary Water Chemistry

A program for monitoring of secondary water chemistry to inhibit steam generator tube degradation. This program shall include:

1) Identification of a sampling schedule for the critical variables and control points for these variables,

2) Identification of the procedures used to measure the values of the critical variables,

3) Identification of process sampling points, which shall include monitoring the discharge of the condensate pumps for evidence of condenser in-leakage,

4) Procedures for the recording and management of data,

PROCEDURES AND PROGRAMS

6.7.6 (Continued)

5) Procedures defining corrective actions for all off-control point chemistry conditions, and

6) A procedure identifying: (a) the authority responsible for the interpretation of the data, and (b) the sequence and timing of administrative events required to initiate corrective action.

d. Backup Method for Determining Subcooling Margin

A program that will ensure the capability to accurately monitor the Reactor Coolant System subcooling margin. This program shall include the following:

1) Training of personnel, and

2) Procedures for monitoring.

e. (Not Used)

f. Accident Monitoring Instrumentation

A program which will ensure the capability to monitor plant variables and systems operating status during and following an accident. This program shall include those instruments provided to indicate system operating status and furnish information regarding the release of radioactive materials (Category 2 and 3 instrumentation as defined in Regulatory Guide 1.97, Revision 3)* and provide the following:

1) Preventive maintenance and periodic surveillance of instrumentation,

2) Preplanned operating procedures and backup instrumentation to be used if one or more monitoring instruments become inoperable, and

3) Administrative procedures for returning inoperable instruments to OPERABLE status as soon as practicable.

*Seabrook has taken exception to the categorization of instrumentation provided in Regulatory Guide 1.97, Revision 3. The Seabrook exceptions are provided in FSAR Table 7.5-1, which has been reviewed by the NRC staff in SER Supplement No. 5.

PROCEDURES AND PROGRAMS

6.7.6 (Continued)

g. Radioactive Effluent Controls Program

A program shall be provided conforming with 10 CFR 50.36a for the control of radioactive effluents and for maintaining the doses to MEMBERS OF THE PUBLIC from radioactive effluents as low as reasonably achievable. The program (1) shall be contained in the ODCM, (2) shall be implemented by operating procedures, and (3) shall include remedial actions to be taken whenever the program limits are exceeded. The program shall include the following elements:

1) Limitations on the operability of radioactive liquid and gaseous monitoring instrumentation including surveillance tests and setpoint determination in accordance with the methodology in the ODCM,

2) Limitations on the concentrations of radioactive material released in liquid effluents to UNRESTRICTED AREAS, conforming to ten times the concentration values in Appendix B, Table 2, Column 2, to 10 CFR 20.1001-20.2402,

3) Monitoring, sampling, and analysis of radioactive liquid and gaseous effluents in accordance with 10 CFR 20.1302 and with the methodology and parameters in the ODCM,

4) Limitations on the annual and quarterly doses or dose commitment to a MEMBER OF THE PUBLIC from radioactive materials in liquid effluents released from the unit to UNRESTRICTED AREAS conforming to Appendix I to 10 CFR Part 50,

5) Determination of cumulative and projected dose contributions from radioactive effluents for the current calendar quarter and current calendar year in accordance with the methodology and parameters in the ODCM at least every 31 days,

6) Limitations on the operability and use of the liquid and gaseous effluent treatment systems to ensure that the appropriate portions of these systems are used to reduce releases of radioactivity when the projected doses in a 31-day period would exceed 2 percent of the guidelines for the annual dose or dose commitment conforming to Appendix I to 10 CFR Part 50,

PROCEDURES AND PROGRAMS

6.7.6 (Continued)

7) Limitations on the dose rate resulting from radioactive material released in gaseous effluents to areas beyond the SITE BOUNDARY shall be limited to the following:

a) For noble gases: Less than or equal to 500 mrems/yr to the whole body and less than or equal to 3000 mrems/yr to the skin, and

b) For Iodine-131, for Iodine-133, for tritium, and for all radionuclides in particulate form with half-lives greater than 8 days: less than or equal to 1500 mrems/yr to any organ,

8) Limitations on the annual and quarterly air doses resulting from noble gases released in gaseous effluents to areas beyond the SITE BOUNDARY conforming to Appendix I to 10 CFR Part 50,

9) Limitations on the annual and quarterly doses to a MEMBER OF THE PUBLIC from Iodine-131, Iodine-133, tritium, and all radionuclides in particulate form with half-lives greater than 8 days in gaseous effluents released to areas beyond the SITE BOUNDARY conforming to Appendix I to 10 CFR Part 50,

10) (Not Used), and

11) Limitations on the annual dose or dose commitment to any MEMBER OF THE PUBLIC due to releases of radioactivity and to radiation from uranium fuel cycle sources conforming to 40 CFR Part 190.

h. Radiological Environmental Monitoring Program

A program shall be provided to monitor the radiation and radionuclides in the environs of the plant. The program shall provide (1) representative measurements of radioactivity in the highest potential exposure pathways, and (2) verification of the accuracy of the effluent monitoring program and modeling of environmental exposure pathways. The program shall (1) be contained in the ODCM, (2) conform to the guidance of Appendix I to 10 CFR Part 50, and (3) include the following:

1) Monitoring, sampling, analysis, and reporting of radiation and radionuclides in the environment in accordance with the methodology and parameters in the ODCM,

PROCEDURES AND PROGRAMS

6.7.6 (Continued)

2) A Land Use Census to ensure that changes in the use of areas at and beyond the SITE BOUNDARY are identified and that modifications to the monitoring program are made if required by the results of this census, and

3) Participation in a Interlaboratory Comparison Program to ensure that independent checks on the precision and accuracy of the measurements of radioactive materials in environmental sample matrices are performed as part of the quality assurance program for environmental monitoring.

i. Diesel Fuel Oil Testing Program

A diesel fuel oil testing program to implement required testing of both new fuel oil and stored fuel oil shall be established. The program shall include sampling and testing requirements and acceptance criteria, using methodologies described in applicable ASTM Standards. The purpose of the program is to establish the following:

a. Acceptability of new fuel oil for use prior to addition to storage tanks by determining that the fuel oil has:

1. An API gravity or an absolute specific gravity within limits,
2. A flash point and kinematic viscosity within limits for ASTM 2D fuel oil, and
3. A clear and bright appearance with proper color*;

b. Within 31 days following addition of the new fuel oil to the storage tank(s), verify that the properties of the new fuel oil, other than those addressed in a., above, are within limits for ASTM 2D fuel oil, and

c. Total particulate concentration of the stored fuel oil is < 10 mg/l when tested every 31 days using methodologies described in applicable ASTM Standards.

The provisions of Specifications 4.0.2 and 4.0.3 are applicable to the Diesel Fuel Oil Testing Program test frequencies.

* For fuel oil that has been dyed, the centrifuge method for quantifying water and sediment in distillate fuels specified in the applicable ASTM Standard is an acceptable method of performing this verification.

PROCEDURES AND PROGRAMS

6.7.6 (Continued)

j. Technical Specification (TS) Bases Control Program

This program provides a means for processing changes to the Bases of these Technical Specifications.

a. Changes to the Bases of the TS shall be made under appropriate administrative controls and reviews.

b. Licensees may make changes to Bases without prior NRC approval provided the changes do not require either of the following:

1. A change in the TS incorporated in the license or

2. A change to the updated FSAR (UFSAR) or Bases that requires NRC approval pursuant to 10 CFR 50.59.

c. The Bases Control Program shall contain provisions to ensure that the Bases are maintained consistent with the UFSAR.

d. Proposed changes that meet the criteria of Specification 6.7.6j.b above shall be reviewed and approved by the NRC prior to implementation. Changes to the Bases implemented without prior NRC approval shall be provided to the NRC on a frequency consistent with 10 CFR 50.71(e).

6.8 REPORTING REQUIREMENTS

ROUTINE REPORTS

6.8.1 In addition to the applicable reporting requirements of Title 10, Code of Federal Regulations, the following reports shall be submitted to the Regional Administrator of the Regional Office of the NRC unless otherwise noted.

STARTUP REPORT

6.8.1.1 A summary report of station startup and power escalation testing shall be submitted following: (1) receipt of an Operating License, (2) amendment to the license involving a planned increase in power level, (3) installation of fuel that has a different design or has been manufactured by a different fuel supplier, and (4) modifications that may have significantly altered the nuclear, thermal, or hydraulic performance of the station.

The Startup Report shall address each of the tests identified in the Final Safety Analysis Report and shall include a description of the measured values of the operating conditions or characteristics obtained during the test program and a comparison of these values with design predictions and specifications. Any corrective actions that were required to obtain satisfactory operation shall also be described. Any additional specific details required in license conditions based on other commitments shall be included in this report.

Startup Reports shall be submitted within: (1) 90 days following completion of the Startup Test Program, (2) 90 days following resumption or commencement of commercial power operation, or (3) 9 months following initial criticality, whichever is earliest. If the Startup Report does not cover all three events (i.e., initial criticality, completion of Startup Test Program, and resumption or commencement of commercial operation), supplementary reports shall be submitted at least every 3 months until all three events have been completed.

ANNUAL REPORTS

6.8.1.2 Annual Reports covering the activities of the station as described below for the previous calendar year shall be submitted prior to March 1 of each year. The initial report shall be submitted prior to March 1 of the year following initial criticality.

Reports required on an annual basis shall include:

The results of specific activity analyses in which the primary coolant exceeded the limits of Specification 3.4.8. The following information shall be included: (1) Reactor power history starting 48 hours prior to the first sample in which the limit was exceeded (in graphic and tabular format); (2) Results of the last isotopic analysis for radioiodine performed prior to exceeding the limit, results of analysis while limit was exceeded and results of one analysis after the radioiodine activity was reduced to less than limit. Each result should include date and time of sampling and the radioiodine concentrations; (3) Clean-up flow history starting 48 hours prior to the first sample in which the limit was exceeded; (4) Graph of the I-131 concentration (μCi/gm) and one other radio-iodine isotope concentration (μCi/gm) as a function of time for the duration of the specific activity above the steady-state level; and (5) The time duration when the specific activity of the primary coolant exceeded the radioiodine limit.

ANNUAL RADIOLOGICAL ENVIRONMENTAL OPERATING REPORT

6.8.1.3 The annual Radiological Environmental Operating Report covering the operation of the unit during the previous calendar year shall be submitted by May 1 of each year. The report shall include summaries, interpretations, and analysis of trends of the results of the Radiological Environmental Monitoring Program for the reporting period. The material provided shall be consistent with the objectives outlined in (1) the ODCM and (2) Sections IV.B.2, IV.B.3, and IV.C of Appendix I to 10 CFR Part 50.

ANNUAL RADIOACTIVE EFFLUENT RELEASE REPORT

6.8.1.4 The Annual Radioactive Effluent Release Report covering the operation of the unit during the previous calendar year of operation shall be submitted by May 1 of each year. The report shall include a summary of the quantities of radioactive liquid and gaseous effluents and solid waste released from the unit. The material provided shall be (1) consistent with the objectives outlined in the ODCM and PCP and (2) in conformance with 10 CFR 50.36a and Section IV.B.1 of Appendix I to 10 CFR Part 50.

6.8.1.5 Deleted

CORE OPERATING LIMITS REPORT

6.8.1.6.a Core operating limits shall be established and documented in the CORE OPERATING LIMITS REPORT prior to each reload cycle, or prior to any remaining portion of a reload cycle, for the following:

1. Cycle dependent Overpower ΔT and Overtemperature ΔT trip setpoint parameters and function modifiers for operation with skewed axial power profiles for Table 2.2-1 of Specification 2.2.1.

2. Cycle dependent maximum allowable combination of thermal power, pressurizer pressure and the highest operating loop average temperature (T_{avg}) for Specifications 2.1.1 and 2.1.2.

3. SHUTDOWN MARGIN and minimum boron concentration limits for MODES 1, 2, 3, and 4 for Specification 3.1.1.1.

4. SHUTDOWN MARGIN and minimum boron concentration limits for MODE 5 for Specification 3.1.1.2.

5. Moderator Temperature Coefficient BOL and EOL limits, and 300 ppm surveillance limit for Specification 3.1.1.3.

6. The minimum boron concentration for Modes 4, 5, and 6 for Specification 3.1.2.7.

7. Shutdown Rod Insertion limit for Specification 3.1.3.5.

8. Control Rod Bank Insertion limits for Specification 3.1.3.6.

9. AXIAL FLUX DIFFERENCE limits for Specification 3.2.1

10. Heat Flux Hot Channel Factor, F_Q^{RTP} and K(Z) for Specification 3.2.2.

11. Nuclear Enthalpy Rise Hot Channel Factor, and $F_{\Delta H}^{RTP}$ for Specification 3.2.3.

12. Cycle dependent DNB-related parameters for reactor coolant system average temperature (T_{avg}), and pressurizer pressure for Specification 3.2.5.

13. The boron concentration limits for MODES 1, 2 and 3 for Specification 3.5.1.1.

14. The boron concentration limits for MODES 1, 2, 3 and 4 for Specification 3.5.4.

15. The boron concentration limits for MODE 6 for Specification 3.9.1.

6.8.1.6.b The analytical methods used to determine the core operating limits shall be those previously reviewed and approved by the NRC in:

1. WCAP-12945P-A, "Code Qualification Document for Best Estimate LOCA Analysis," Volume 1, Revision 2, and Volumes 2 through 5, Revision 1; Bajorek, S. M., et al, 1998.

   Methodology for Specification:
   3.2.2 - Heat Flux Hot Channel Factor

2. WCAP-10079-P-A, (Proprietary) and WCAP-10080-A (Nonproprietary), "NOTRUMP: A Nodal Transient Small Break and General Network Code", August 1985.

   Methodology for Specification:
   3.2.2 - Heat Flux Hot Channel Factor

3. YAEC-1363-A, "CASMO-3G Validation," April, 1988.

   YAEC-1659-A, "SIMULATE-3 Validation and Verification," September, 1988.

   WCAP-11596-P-A, (Proprietary), "Qualification of the PHOENIX-P/ANC Nuclear Design System for Pressurized Water Reactor Cores", June, 1988.

   WCAP-10965-P-A, (Proprietary), "ANC: A Westinghouse Advanced Nodal Computer Code", September, 1986.

   Methodology for Specifications:
   3.1.1.1 - SHUTDOWN MARGIN for MODES 1,2, 3, and 4
   3.1.1.2 - SHUTDOWN MARGIN for MODE 5
   3.1.1.3 - Moderator Temperature Coefficient
   3.1.3.5 - Shutdown Rod Insertion Limit
   3.1.3.6 - Control Rod Insertion Limits
   3.2.1 - AXIAL FLUX DIFFERENCE
   3.2.2 - Heat Flux Hot Channel Factor
   3.2.3 - Nuclear Enthalpy Rise Hot Channel Factor

4. Seabrook Station Updated Final Safety Analysis Report, Section 15.4.6, "Chemical and Volume Control System Malfunction That Results in a Decrease in the Boron Concentration in the Reactor Coolant System".

   Methodology for Specifications:
   3.1.1.1 - SHUTDOWN MARGIN for MODES 1, 2, 3, and 4
   3.1.1.2 - SHUTDOWN MARGIN for MODE 5

6.8.1.6.b (Continued)

5. YAEC-1241, "Thermal-Hydraulic Analysis of PWR Fuel Elements Using the CHIC-KIN Code", R. E. Helfrich, March, 1981.

   WCAP-14565-P-A, (Proprietary), "VIPRE-01 Modeling and Qualification for Pressurized Water Reactor Non-LOCA Thermal-Hydraulic Safety Analysis", October, 1999.

   WCAP-15025-P-A, "Modified WRB-2 Correlation, WRB-2M, for Predicting Critical Heat Flux in 17x17 Rod Bundles with Modified LPD Mixing Vane Grids," April 1999.

   Methodology for Specification:
   2.1 - Safety Limits
   3.2.1 - AXIAL FLUX DIFFERENCE
   3.2.2 - Heat Flux Hot Channel Factor
   3.2.3 - Nuclear Enthalpy Rise Hot Channel Factor
   3.2.5 - DNB Parameters

6. YAEC-1849P, "Thermal-Hydraulic Analysis Methodology Using VIPRE-01 For PWR Applications," October, 1992.

   WCAP-11397-P-A, (Proprietary), "Revised Thermal Design Procedure", April, 1989.

   WCAP-8745-P-A, Design Basis for the Thermal Overpower ΔT and Thermal Overtemperature ΔT Trip Functions," September 1986.

   Methodology for Specification:
   2.2.1 - Limiting Safety System Settings
   3.2.1 - AXIAL FLUX DIFFERENCE
   3.2.2 - Heat Flux Hot Channel Factor
   3.2.3 - Nuclear Enthalpy Rise Hot Channel Factor

7. YAEC-1854P, "Core Thermal Limit Protection Function Setpoint Methodology For Seabrook Station," October, 1992

   Methodology for Specification:
   2.2.1 - Limiting Safety System Settings
   3.1.3.5 - Shutdown Rod Insertion Limit
   3.1.3.6 - Control Rod Insertion Limits
   3.2.1 - AXIAL FLUX DIFFERENCE
   3.2.2 - Heat Flux Hot Channel Factor
   3.2.3 - Nuclear Enthalpy Rise Hot Channel Factor

6.8.1.6.b (Continued)

8. YAEC-1856P, "System Transient Analysis Methodology Using RETRAN for PWR Applications," December, 1992.

   Methodology for Specification:
   2.2.1 - Limiting Safety System Settings
   3.1.1.3 - Moderator Temperature Coefficient
   3.1.3.5 - Shutdown Rod Insertion Limit
   3.1.3.6 - Control Rod Insertion Limits
   3.2.1 - AXIAL FLUX DIFFERENCE
   3.2.2 - Heat Flux Hot Channel Factor
   3.2.3 - Nuclear Enthalpy Rise Hot Channel Factor

9. YAEC-1752, "STAR Methodology Application for PWRs, Control Rod Ejection, Main Steam Line Break," October, 1990.

   Methodology for Specification:
   3.1.1.3 - Moderator Temperature Coefficient
   3.1.3.5 - Shutdown Rod Insertion Limit
   3.1.3.6 - Control Rod Insertion Limits
   3.2.1 - AXIAL FLUX DIFFERENCE
   3.2.2 - Heat Flux Hot Channel Factor
   3.2.3 - Nuclear Enthalpy Rise Hot Channel Factor

10. YAEC-1855PA, "Seabrook Station Unit 1 Fixed Incore Detector System Analysis," October, 1992.

    Methodology for Specification:
    3.2.1 - AXIAL FLUX DIFFERENCE
    3.2.2 - Heat Flux Hot Channel Factor
    3.2.3 - Nuclear Enthalpy Rise Hot Channel Factor

11. YAEC-1624P, "Maine Yankee RPS Setpoint Methodology Using Statistical Combination of Uncertainties - Volume 1 - Prevention of Fuel Centerline Melt," March, 1988.

    Methodology for Specification:
    3.2.1 - AXIAL FLUX DIFFERENCE
    3.2.2 - Heat Flux Hot Channel Factor
    3.2.3 - Nuclear Enthalpy Rise Hot Channel Factor

6.8.1.6.b (Continued)

12. NYN-95048, Letter from T. C. Feigenbaum (NAESCo) to NRC, "License Amendment Request 95-05: Positive Moderator Temperature Coefficient", May 30, 1995.

    Methodology for Specification:
    3.1.1.3 - Moderator Temperature Coefficient

13. WCAP-12610-P-A, "VANTAGE + Fuel Assembly Reference Core Report". April, 1995, (Westinghouse Proprietary).

    Methodology for Specification:
    3.2.2 - Heat Flux Hot Channel Factor

14. WCAP-10216-P-A, Revision 1A (Proprietary), "Relaxation of Constant Axial Offset Control F_Q Surveillance Technical Specification", February, 1994.

    Methodology for Specification:
    3.2.1 - AXIAL FLUX DIFFERENCE
    3.2.2 - Heat Flux Hot Channel Factor

15. WCAP-9272-P-A, (Proprietary), "Westinghouse Reload Safety Evaluation Methodology", July, 1985.

    Methodology for Specifications:
    2.1 - Safety Limits
    3.1.1.1 - SHUTDOWN MARGIN for MODES 1,2,3, and 4
    3.1.1.2 - SHUTDOWN MARGIN for MODE 5
    3.1.1.3 - Moderator Temperature Coefficient
    3.1.2.7 - Isolation of Unborated Water Sources - Shutdown
    3.1.3.5 - Shutdown Rod Insertion Limit
    3.1.3.6 - Control Rod Insertion Limits
    3.2.1 - AXIAL FLUX DIFFERENCE
    3.2.2 - Heat Flux Hot Channel Factor
    3.2.3 - Nuclear Enthalpy Rise Hot Channel Factor
    3.2.5 - DNB Parameters
    3.5.1.1 - Accumulators for MODES 1, 2, and 3
    3.5.4 - Refueling Water Storage Tank for MODES 1, 2, 3, and 4
    3.9.1 - Boron Concentration

16. WCAP-13749-P-A, (Proprietary) "Safety Evaluation Supporting the Conditional Exemption of the Most Negative Moderator Temperature Coefficient Measurement," March, 1997.

    Methodology for Specifications:
    3.1.1.3 - Moderator Temperature Coefficient

6.8.1.6.c The core operating limits shall be determined so that all applicable limits (e.g., fuel thermal-mechanical limits, core thermal-hydraulic limits, ECCS limits, nuclear limits such as SHUTDOWN MARGIN, and transient and accident analysis limits) of the safety analysis are met. The CORE OPERATING LIMITS REPORT for each reload cycle, including any mid-cycle revisions or supplements thereto, shall be provided upon issuance, to the NRC Document Control Desk with copies to the Regional Administrator and the Resident Inspector.

SPECIAL REPORTS

6.8.2 Special reports shall be submitted to the U.S. Nuclear Regulatory Commission, Washington, D.C. 20555, Attn: Document Control Desk, with a copy to the NRC Regional Administrator within the time period specified for each report.

6.9 (THIS SPECIFICATION NUMBER IS NOT USED)

6.10 RADIATION PROTECTION PROGRAM

6.10.1 Procedures for personnel radiation protection shall be prepared consistent with the requirements of 10 CFR Part 20 and shall be approved, maintained, and adhered to for all operations involving personnel radiation exposure.

6.11 HIGH RADIATION AREA

6.11.1 Pursuant to paragraph 20.1601(c) of 10 CFR Part 20, in lieu of the "control device" or "alarm signal" required by paragraph 20.1601(a) and (b), each high radiation area, as defined in 10 CFR Part 20, in which the intensity of radiation is equal to or less-than 1000 mR/h at 30 cm (12 in.) from the radiation source or from any surface that the radiation penetrates shall be barricaded and conspicuously posted as a high radiation area and entrance thereto shall be controlled by requiring issuance of a Radiation Work Permit (RWP). Individuals qualified in radiation protection procedures (e.g., Health Physics Technician) or personnel continuously escorted by such individuals may be exempt from the RWP issuance requirement during the performance of their assigned duties in high radiation areas with exposure rates equal to or less than 1000 mR/h, provided they are otherwise following plant radiation protection procedures for entry into such high radiation areas. Any individual or group of individuals permitted to enter such areas shall be provided with or accompanied by one or more of the following:

a. A radiation monitoring device that continuously indicates the radiation dose rate in the area; or

b. A radiation monitoring device that continuously integrates the radiation dose rate in the area and alarms when a preset integrated dose is received. Entry into such areas with this monitoring device may be made after the dose rate levels in the area have been established and personnel have been made knowledgeable of them; or

HIGH RADIATION AREA

6.11.1 (Continued)

c. An individual qualified in radiation protection procedures with a radiation dose rate monitoring device, who is responsible for providing positive control over the activities within the area and shall perform periodic radiation surveillance at the frequency specified in the Radiation Work Permit.

6.11.2 In addition to the requirements of Specification 6.11.1, areas accessible to personnel with radiation levels greater than 1000 mR/h at 30 cm (12 in.) from the radiation source or from any surface that the radiation penetrates shall be provided with locked doors to prevent unauthorized entry, and the keys shall be maintained under the administrative control of the Shift Manager on duty and/or health physics supervision. Doors shall remain locked except during periods of access by personnel under an approved RWP that shall specify the dose rate levels in the immediate work areas and the maximum allowable stay time for individuals in that area. In lieu of the stay time specification of the RWP, direct or remote (such as closed circuit TV cameras) continuous surveillance may be made by personnel qualified in radiation protection procedures to provide positive exposure control over the activities being performed within the area.

For individual high radiation areas accessible to personnel with radiation levels of greater than 1000 mR/h that are located within large areas, such as PWR containment, where no enclosure exists for purposes of locking, and where no enclosure can be reasonably constructed around the individual area, that individual area shall be barricaded, conspicuously posted, and a flashing light shall be activated as a warning device.

6.12 PROCESS CONTROL PROGRAM (PCP)

Changes to the PCP:

a. Shall be documented and records of reviews performed shall be retained as required by the Operational Quality Assurance Program (OQAP). This documentation shall contain:

1) Sufficient information to support the change together with the appropriate analyses or evaluations justifying the change(s) and

2) A determination that the change will maintain the overall conformance of the solidified waste product to existing requirements of Federal, State, or other applicable regulations.

b. Shall become effective after review and acceptance by the SORC and approval of the Station Director.

6.13 OFFSITE DOSE CALCULATION MANUAL (ODCM)

Changes to the ODCM:

a. Shall be documented and records of reviews performed shall be retained as required by the Operational Quality Control Program (OQAP). This documentation shall contain:

   1) Sufficient information to support the change together with the appropriate analyses or evaluations justifying the change(s) and

   2) A determination that the change will maintain the level of radioactive effluent control required by 10 CFR 20.1302, 40 CFR Part 190, 10 CFR 50.36a, and Appendix I to 10 CFR Part 50 and not adversely impact the accuracy or reliability of effluent, dose, or setpoint calculations.

b. Shall become effective after review and acceptance by the SORC and the approval of the Station Director.

c. Shall be submitted to the Commission in the form of a complete, legible copy of the entire ODCM as part of or concurrent with the Annual Radioactive Effluent Release Report for the period of the report in which any change to the ODCM was made. Each change shall be identified by markings in the margin of the affected pages, clearly indicating the area of the page that was changed, and each affected page shall indicate the revision number the change was implemented.

6.14 MAJOR CHANGES TO LIQUID, GASEOUS, AND SOLID RADWASTE TREATMENT SYSTEMS*

6.14.1 Licensee-initiated major changes to the Radwaste Treatment Systems (liquid, gaseous, and solid):

a. Shall be reported to the Commission in the Annual Radioactive Effluent Release Report for the period in which the evaluation was reviewed by the SORC. The discussion of each change shall contain:

   1) A summary of the evaluation that led to the determination that the change could be made in accordance with 10 CFR 50.59;

   2) Sufficient detailed information to totally support the reason for the change without benefit of additional or supplemental information;

*Licensees may choose to submit the information called for in this Specification as part of the FSAR update, pursuant to 10 CFR 50.71.

6.14.1 (Continued)

3) A detailed description of the equipment, components, and processes involved and the interfaces with other plant systems;

4) An evaluation of the change, which shows the predicted releases of radioactive materials in liquid and gaseous effluents and/or quantity of solid waste that differ from those previously predicted in the License application and amendments thereto;

5) An evaluation of the change, which shows the expected maximum exposures to a MEMBER OF THE PUBLIC in the UNRESTRICTED AREA and to the general population that differ from those previously estimated in the License application and amendments thereto;

6) A comparison of the predicted releases of radioactive materials, in liquid and gaseous effluents and in solid waste, to the actual releases for the period prior to when the change is to be made;

7) An estimate of the exposure to plant operating personnel as a result of the change; and

8) Documentation of the fact that the change was reviewed and found acceptable by the SORC.

b. Shall become effective upon review and acceptance by the SORC.

6.15 CONTAINMENT LEAKAGE RATE TESTING PROGRAM

A program shall be established to implement the leakage rate testing of the containment as required by 10 CFR 50.54(o) and 10 CFR 50, Appendix J, Option B, as modified by approved exemptions. This program shall be in accordance with the guidelines contained in Regulatory Guide 1.163, "Performance-Based Containment Leak Test Program, dated September 1995," as modified by the following exception:

a. NEI 94-01-1995, Section 9.2-3: The first ILRT performed after October 30, 1992 shall be performed no later than April 29, 2008.

The peak calculated containment internal pressure for the design basis loss of coolant accident, P_a, is 49.6 psig.

The maximum allowable containment leakage rate, L_a, at P_a, shall be 0.15% of primary containment air weight per day.

CONTAINMENT LEAKAGE RATE TESTING PROGRAM

6.15 (Continued)

The provisions of SR 4.0.2 do not apply to the test frequencies specified in the Containment Leakage Rate Testing Program.

The provisions of SR 4.0.3 are applicable to the Containment Leakage Rate Testing Program.

Containment leakage rate acceptance criterion is $\leq 1.0\ L_a$. During the first unit startup following testing in accordance with this program, the leakage rate acceptance criteria are $\leq 0.60\ L_a$ for the Type B and Type C tests and $\leq 0.75\ L_a$ for Type A tests.

Overall air lock leakage rate acceptance criterion is $\leq 0.05\ L_a$ when tested at $\geq P_a$.

Each containment 8-inch purge supply and exhaust isolation valve leakage rate acceptance criterion is $\leq 0.01\ L_a$ when tested at P_a.

APPENDIX B

TO FACILITY OPERATING LICENSE NO. NPF-86

SEABROOK STATION, UNIT 1

FPL ENERGY SEABROOK, LLC

DOCKET NO. 50-443

ENVIRONMENTAL PROTECTION PLAN

(NONRADIOLOGICAL

AMENDMENT NO. 86

SEABROOK STATION, UNIT NO. 1

ENVIRONMENTAL PROTECTION PLAN
(NONRADIOLOGICAL)

TABLE OF CONTENTS

Section		Page
1.0	Objectives of the Environmental Protection Plan	1-1
2.0	Environmental Protection Issues	2-1
3.0	Consistency Requirements	3-1
3.1	Plant Design and Operation	3-1
3.2	Reporting Related to the NPDES Permit and State Certification	3-3
3.3	Changes Required for Compliance with Other Environmental Regulations	3-3
4.0	Environmental Conditions	4-1
4.1	Unusual or Important Environmental Events	4-1
4.2	Environmental Monitoring	4-1
5.0	Administrative Procedures	5-1
5.1	Review and Audit	5-1
5.2	Records Retention	5-1
5.3	Changes in Environmental Protection Plan	5-2
5.4	Plant Reporting Requirements	5-2

1.0 Objectives of the Environmental Protection Plan

The Environmental Protection Plan (EPP) is to provide for protection of non-radiological environmental values during operation of the nuclear facility. The principal objectives of the EPP are as follows:

(1) Verify that the facility is operated in an environmentally acceptable manner, as established by the Final Environmental Statement - Operating Licensing Stage (FES-OL) and other NRC environmental impact assessments.

(2) Coordinate NRC requirements and maintain consistency with other Federal, State and local requirements for environmental protection.

(3) Keep NRC informed of the environmental effects of facility construction and operation of actions taken to control those effects.

Environmental concerns identified in the FES-OL which relate to water quality matters are regulated by way of the licensee's NPDES permit.

2.0 Environmental Protection Issues

In the FES-OL (NUREG-0895) dated December, 1982, the staff considered the environmental impacts associated with the operation of Seabrook Station, Unit No. 1. No aquatic/water quality, terrestrial, or noise issues were identified.

Aquatic matters are addressed by the effluent limitations and monitoring requirements contained in NPDES Permit No. NH0020338 issued by the U. S. Environmental Protection Agency (Region I) as amended. The NRC will rely on the U.S.E.P.A and the NPDES Permit for regulation of matters involving water quality and aquatic biota.

3.0 Consistency Requirements

3.1 Plant Design and Operation

The licensee may make changes in station design or operation or perform tests or experiments affecting the environment provided such activities do not involve an unreviewed environmental question and do not involve a change in the EPP*. Changes in station design or operation or performance of tests or experiments which do not affect the environment are not subject to the requirements of this EPP. Activities governed by Section 3.3 are not subject to the requirements of this Section.

Before engaging in additional construction or operational activities which may significantly affect the environment, the licensee shall prepare and record an environmental evaluation of such activity. Activities are excluded from this requirement if all measurable nonradiological environmental effects are confined to the onsite areas previously disturbed during site preparation and plant construction. When the evaluation indicates that such activity involves an unreviewed environmental question, the licensee shall provide a

---

* This provision does not relieve the licensee of the requirements of 10 CFR 50.59.

written evaluation of such activity and obtain prior NRC approval. When such activity involves a change in the EPP, such activity and change to the EPP may be implemented only in accordance with an appropriate license amendment as set forth in Section 5.3 of this EPP.

A proposed change, test or experiment shall be deemed to involve an unreviewed environmental question it concerns: (1) a matter which may result in a significant increase in any adverse environmental impact previously evaluated in the FES-OL, environmental impact appraisals, or in any decisions of the Atomic Safety and Licensing Board; or (2) a significant change in effluents or power level; or (3) a matter, not previously reviewed and evaluated in the documents specified in (1) of this Subsection, which may have a significant adverse environmental impact.

The licensee shall maintain records of changes in facility design or operation and of tests and experiments carried out pursuant to this Subsection. These records shall include written evaluations which provide bases for the determination that the change, test, or experiment does not involve an unreviewed environmental question or constitute a decrease in the effectiveness of this EPP to meet the objectives specified in Section 1.0. The licensee shall include as part of the Annual Environmental Operating Report (per Subsection 5.4.1) brief descriptions, analyses, interpretations, and evaluations of such changes, tests and experiments.

3.2 Reporting Related to the NPDES Permit and State Certification

Changes to, or renewals of, the NPDES Permits or the State certification shall be reported to the NRC within 30 days following the date the change or renewal is approved. If a permit or certification, in part or in its entirety, is appealed and stayed, the NRC shall be notified within 30 days following the date the stay is granted.

The licensee shall notify the NRC of changes to the effective NPDES Permit proposed by the licensee by providing NRC with a copy of the proposed change at the same time it is submitted to the permitting agency. The licensee shall provide the NRC a copy of the application for renewal of the NPDES Permit at the same time the application is submitted to the permitting agency.

3.3 Changes Required for Compliance with Other Environmental Regulations

Changes in plant design or operation and performance of tests or experiments which are required to achieve compliance with other Federal, State, and local environmental regulations are not subject to the requirements of Section 3.1.

4.0 Environmental Conditions

4.1 Unusual or Important Environmental Events

Any occurrence of an unusual or important event that indicates or could result in significant environmental impact causally related to plant operation shall be recorded and reported to the NRC within 24 hours followed by a written report per Subsection 5.4.2. The following are examples: excessive bird impaction events, onsite plant or animal disease outbreaks; mortality or unusual occurrence of any species protected by the Endangered Species Act of 1973; fish kills; increase in nuisance organisms or conditions; and unanticipated or emergency discharge of waste water or chemical substances.

No routine monitoring programs are required to implement this condition.

4.2 Environmental Monitoring

4.2.1 Aquatic Monitoring

The certifications and permits required under the Clean Water Act provide mechanisms for protecting water quality and, indirectly, aquatic biota. The NRC will rely on the decisions made by the U. S. Environmental Protection Agency and the State of New Hampshire under the authority of the Clean Water Act, for any requirements for aquatic monitoring.

4.2.2 Terrestrial Monitoring

Terrestrial monitoring is not required.

4.2.3 Noise Monitoring

Noise monitoring is not required

5.0 Administrative Procedures

5.1 Review and Audit

The licensee shall provide for review and audit of compliance with the EPP. The audits shall be conducted independently of the individual or groups responsible for performing the specific activity. A description of the organization structure utilized to achieve the independent review and audit function and results of the audit activities shall be maintained and made available for inspection.

5.2 Records Retention

Records and logs relative to the environmental aspects of station operation shall be made and retained in a manner convenient for review and inspection. These records and logs shall be made available to NRC on request.

Records of modifications to station structures, systems and components determined to potentially affect the continued protection of the environment shall be retained for the life of the station. All other records, data and logs relating to this EPP shall be retained for five years or, where applicable, in accordance with the requirements of other agencies.

5.3 Changes in Environmental Protection Plan

Requests for changes in the EPP shall include an assessment of the environmental impact of the proposed change and a supporting justification. Implementation of such changes in the EPP shall not commence prior to NRC approval of the proposed changes in the form of a license amendment incorporating the appropriate revision to the EPP.

5.4 Plant Reporting Requirements

5.4.1 Routine Reports

An Annual Environmental Operating Report describing implementation of this EPP for the previous year shall be submitted to the NRC prior to May 1 of each year. The period of the first report shall begin with the date of issuance of the operating license, and the initial report shall be submitted prior to May 1 of the year following issuance of the operating license.

The report shall include summaries and analyses of the results of the environmental protection activities required by Subsection 4.2 (if any) of this EPP for the report period, including a comparison with related preoperational studies, operational controls (as appropriate), and previous nonradiological environmental monitoring reports, and an assessment of the observed impacts of the plant operation on the environment. If harmful effects or evidence of trends toward irreversible damage to the environment are observed, the

licensee shall provide a detailed analysis of the data and a proposed course of mitigating action.

The Annual Environmental Operating Report shall also include:

(1) A list of EPP noncompliances and the corrective actions taken to remedy them.

(2) A list of all changes in station design or operation, tests, and experiments made in accordance with Subsection 3.1 which involved a potentially significant unreviewed environmental question.

(3) A list of nonroutine reports submitted in accordance with Subsection 5.4.2.

In the event that some results are not available by the report due date, the report shall be submitted noting and explaining the missing results. The missing results shall be submitted as soon as possible in a supplementary report.

5.4.2 Nonroutine Reports

A written report shall be submitted to the NRC within 30 days of occurrence of a nonroutine event. The report shall: (a) describe, analyze, and evaluate the event, including extent and magnitude of the impact, and plant operating

characteristics; (b) describe the probable cause of the event, (c) indicate the action taken to correct the reported event; (d) indicate the corrective action taken to preclude repetition of the event and to prevent similar occurrences involving similar components or systems; and (e) indicate the agencies notified and their preliminary responses.

Events reportable under this subsection which also require reports to other Federal, State or local agencies shall be reported in accordance with those reporting requirements in lieu of the requirements of this Subsection. The NRC shall be provided with a copy of such report at the same time it is submitted to the other agency.

APPENDIX C

ADDITIONAL CONDITIONS
OPERATING LICENSE NO. NPF-86

FPL Energy Seabrook, LLC, shall comply with the following conditions on the schedules noted below:

Amendment Number	Additional Condition	Implementation Date
50	NAESCO is authorized to relocate certain technical specification requirements to licensee-controlled documents. Implementation of this amendment shall include the relocation of these technical specification requirements to the appropriate documents, as described in the licensee's application dated October 17, 1996, and evaluated in the staff's Safety Evaluation attached to this amendment.	The amendment shall be implemented within 60 days from March 12, 1997
94	FPLE Seabrook, LLC must maintain a program in effect to control the administration of potassium iodide (KI) to Control Room personnel during core alterations when the Primary Containment Equipment Hatch is open. This program will remain in effect until the current licensing basis for unfiltered inleakage is revised.	The amendment shall be implemented within 60 days from October 3, 2003
112	FPLE Seabrook, LLC shall maintain the operational limit of primary-to-secondary leakage at 150 gallons per day per Steam Generator and if this limit is exceeded, FPLE Seabrook , LLC will take the appropriate actions in accordance with TS 3.4.6.2, "Reactor Coolant System Leakage."	This amendment shall be implemented within 90 days from September 29, 2006