Proposed Changes to the TN-RAM Certificate of Compliance, Revision 8 and to the TN-RAM Safety Analysis Report, Revision 8 (E-10261)

NRC FORM 618
(8-2000)
10 CFR 71

U.S. NUCLEAR REGULATORY COMMISSION

CERTIFICATE OF COMPLIANCE
FOR RADIOACTIVE MATERIAL PACKAGES

1. a. CERTIFICATE NUMBER	b. REVISION NUMBER	c. DOCKET NUMBER	d. PACKAGE IDENTIFICATION NUMBER	PAGE		PAGES
9233	~~8~~ 9	71-9233	USA/9233/B(U)-96	1	OF	3

2. PREAMBLE

a. This certificate is issued to certify that the package (packaging and contents) described in Item 5 below meets the applicable safety standards set forth in Title 10, Code of Federal Regulations, Part 71, "Packaging and Transportation of Radioactive Material."

b. This certificate does not relieve the consignor from compliance with any requirement of the regulations of the U.S. Department of Transportation or other applicable regulatory agencies, including the government of any country through or into which the package will be transported.

3. THIS CERTIFICATE IS ISSUED ON THE BASIS OF A SAFETY ANALYSIS REPORT OF THE PACKAGE DESIGN OR APPLICATION

a. ISSUED TO *(Name and Address)*

Transnuclear, Inc
~~Four Skyline Drive~~
~~Hawthorne, NY 10532-2120~~
7135 Minstrel Way, Suite 300
Columbia, MD 21045

b. TITLE AND IDENTIFICATION OF REPORT OR APPLICATION

Transnuclear, Inc. application dated March 8, 2005, as supplemented.

4. CONDITIONS

This certificate is conditional upon fulfilling the requirements of 10 CFR Part 71, as applicable, and the conditions specified below.

5.

(a) Packaging

(1) Model No.: TN-RAM

(2) Description

The package is a steel encased lead shielded cask with wood impact limiters attached at both ends. The cask is a right circular cylinder. The overall dimensions of the packaging are approximately 178 inches long and 92 inches diameter with the impact limiters installed. The cask body is approximately 129 inches long with an outer diameter of 51 inches. The cask cavity has a length of approximately 111 inches and an inside diameter of 35 inches. The cask body is made of a 0.75-inch stainless steel inner shell, a 5.88-inch thick lead annulus, a 1.5-inch thick stainless steel outer shell, a 0.5-inch thick inner bottom plate and a 2.5-inch thick outside bottom plate. The lead shielding is 6 inches thick in the bottom end of the cask. The outer shell of the cask body is covered with a stainless steel thermal shield. The closure lid consists of a 2.5-inch thick outer stainless steel plate and a 0.5-inch thick inner stainless steel plate separated by 6 inches of lead shielding. The lid is secured by sixteen 1.5-inch diameter closure bolts. Two concentric silicone O-rings are installed in grooves on the underside of the lid. The cask is equipped with a sealed leak test port between the O-rings, a vent port in the closure lid and a sealed drain port in the bottom of the cask.

approximately

approximately

Each impact limiter is attached to the cask by eight 1.75-inch diameter bolts. The cask is equipped with 6 trunnions, four at the top and two at the bottom.

The gross weight of the package is approximately 80,000 pounds, including maximum contents of 9,500 pounds.

An optional lid, with the lead shielding in the form of a separate shielding disk, can also be used.

5.(a) Packaging (continued)

(3) Drawings

The packaging is constructed in accordance with Transnuclear, Inc. Drawing Nos. 990-701, Rev. 6; 990-702, Rev. 6; 990-703, Rev. 7; 990-704, Rev. 3; 990-705, Rev. 5; 990-706, Rev. 3; 990-707, Rev. 3; 990-708, Rev. 6; and 990-709, Rev. 1.

(b) Contents

(1) Type and Form of Material

Dry irradiated and contaminated non-fuel-bearing solid materials contained within a secondary container.

(2) Maximum quantity of material per package

Greater than Type A quantities of radioactive material which may include fissile material provided that the fissile material does not exceed the mass limits of 10 CFR 71.15. The contents may not exceed 2,000 times an A_2 quantity. The decay heat of the contents may not exceed 300 watts. The maximum gross weight of the contents, secondary container, and shoring is limited to 9,500 pounds.

6. As appropriate, shoring must be used in the secondary container sufficient to prevent significant movement of the contents under accident conditions.

7. Both the inner cask cavity and the secondary container must be free of water when the package is delivered to a carrier for transport.

8. In addition to the requirements of Subpart G of 10 CFR Part 71:

(a) Prior to each shipment, the lid seals must be inspected. The seals must be replaced with new seals if inspection shows any defects or every 12 months, whichever occurs first;

(b) The package shall be prepared for shipment and operated in accordance with the Operating Procedures of Section 7.0 of the application; and

(c) The package must meet the Acceptance Tests and Maintenance Program of Section 8.0 of the application.

9. The package authorized by this certificate is hereby approved for use under the general license provisions of 10 CFR 71.17.

10. Expiration date: April 30, 2010.

REFERENCES

Transnuclear, Inc., application dated March 8, 2005.

Supplement dated: May 4, 2007.

October 19

FOR THE U.S. NUCLEAR REGULATORY COMMISSION

Stuart Brown for

Robert A. Nelson, Chief
Licensing Branch
Division of Spent Fuel Storage
and Transportation
Office of Nuclear Material Safety
and Safeguards

Date: 5/7/07

SAFETY ANALYSIS REPORT
for the
TN-RAM

E-10621

November 1988

TRANSNUCLEAR, INC.
7135 Minstrel Way, Suite 300
Columbia, Maryland 21045

TN-RAM SAR
REVISION LOG
E-10621

Rev. No.	Date	Description
5	1/4/90	Revised Pages as follows: Chapter 1, page 8. App. 2.10.5, pgs. 2, 3 & 5-12. App. 2.10.7, page 5. Chapter 4, page 1. Chapter 8, pgs. 3-5 & 7.
6	12/18/97	Revised Pages as follows: Chapter 1, page 14. Dwg. No. 990-701 Chapter 7, pgs. 8 & 11.
7	8/20/98	Revised pages as follows: Chapter 1, page 14 Dwg. Nos. 990-707 & -708
8	5/7/07	Revised pages as follows: Page 3-7, dwgs 990-703, -705, -708
9		Revised pages as follows: SAR Cover sheet Revision log page 2 SAR pages 1-1, 1-2, 1-3A, 1-4, 1-6, 1-11, 1-13, 1-14 SAR pages 2-iii, 2-xxviii, 2-1, 2-2, 2-3, 2-8, 2-9, 2-12, 2-14, 2-16, 2-28, 2-94 SAR Appendix 2.10.1 pages 2.10.1-1, 2.10.1-2, 2.10.1-18 SAR pages 3-ii, 3-iii, 3-2, 3-3A, 3-4, 3-6, 3-17, 3-18, 3-19, 3-20, 3-21, 3-22, 3-23, 3-24, 3-25, 3-26, 3-27, 3-28, 3-29, 3-30 SAR pages 4-ii, 4-1, 4-3, 4-5C, 4-7, 4-9 SAR pages 5-1, 5-2, 5-4, 5-5 SAR pages 7-i, 7-1, 7-2, 7-3, 7-4, 7-5, 7-6, 7-7, 7-8, 7-9, 7-10, 7-11 SAR pages 8-i, 8-2, 8-3, 8-4, 8-6 Revised drawings as follows: Drawings 990-701, -703, -704 New pages as follows: SAR Appendix 2.10.8 pages 2.10.8-1 to 2.10.8-22 SAR pages 3-19A, 3-19B, 3-20A, 3-20B, 3-22A SAR pages 4-11, 4-12 SAR pages 7-12, 7-13, 7-14, 7-15, 7-16 New drawings as follows: Drawing 990-710

CHAPTER ONE

GENERAL INFORMATION

1.1 INTRODUCTION

This Safety Analysis Report (SAR) presents the evaluation of a Type B radioactive material transport packaging developed by Transnuclear, Inc. and designated the TN-RAM. This SAR describes the design features and presents the safety analyses which demonstrate that the TN-RAM complies with applicable requirements of 10CFR71. All references to 10CFR71 in this Safety Analysis Report consider the current revision at the time of submittal, October 2007. The format and content of this SAR follow the guidelines of Regulatory Guide 7.9.

The TN-RAM will be used to transport dry irradiated non-fuel bearing solid materials in secondary containers. Fissile contents shall not exceed the generally licensed limits as specified in 10CFR71.22. The TN-RAM is a right circular cylinder with steel containment, lead shielding, and wood filled impact limiters. A detailed description of the packaging is presented in Section 1.2.

1.2 PACKAGE DESCRIPTION

1.2.1 Packaging

The basic structure of the TN-RAM is a right circular cylinder, steel-lead-steel type cask with wood-filled impact limiters attached at both ends. The steel-lead-steel construction of the lid, sides, and bottom provide a shielding effectiveness of approximately 6.9 inches lead equivalent. The overall dimensions of the packaging are 178.12 inches long and 91.75 inches in diameter with the impact limiters installed. The cask is 129.38 inches long and 51.25 inches in diameter. The cask cavity has a length of 111 inches and a diameter of 35 inches. The general arrangement of the TN-RAM is depicted in Figure 1-1. Component terminology used in this SAR is also identified on Figure 1-1. Detailed design drawings for the TN-RAM are provided in Appendix 1.3. Table 1-1 summarizes the materials of construction used in the TN-RAM.

The basic components of the TN-RAM packaging are the cask body, closure lid, lid bolts, and impact limiters. There are two versions of the closure lid. The original lid consists of the lid plate with a lead shield plug attached. The optional lid design consists of a lid plate essentially identical to the original with a separate shield plug that has nearly the same dimensions as the original but is installed separately. Note that Figure 1-1 shows the original lid. The cask body consists of the cylindrical shell assembly and bottom assembly. The closure lid is attached to the cask body with sixteen 1.5 inch diameter bolts. Six trunnions are welded to the cask body with four located at 90° intervals near the lid end and two located with a 180° spacing near the bottom end. Two penetrations into the containment are provided to support cask operations. One is located in the lid and one is located in the cask body near the bottom end. The maximum gross weight of the loaded package is 80,000 pounds including a maximum payload of 9,500 pounds. The TN-RAM is

COMPONENTS DEPICTED ON FIGURE 1-1

ITEM NO.	DESCRIPTION
1	Upper (front) Impact Limiter
2	Lower (rear) Impact Limiter
3	Impact Limiter Attachment Lugs
4	Impact Limiter Attachment Bolts
5	Lifting/Tiedown Trunnions
6	Closure Lid with attached shield disk
7	Lid Bolts
8	Cask Body
9	Inner Shell
10	Outer Shell
11	Bolting Flange
12	Drain Port
13	Vent Port
14	Thermal Barrier

Table 1-1
Materials of Construction Summary

COMPONENT	MATERIAL
Cask Body:	
Inner Shell	ASTM A-240, Type 304
Outer Shell	ASTM A-240, Type 304
Lead Shielding	ASTM B-29
Thermal Shield	ASTM A-240, Type 304
Bolting Flange	ASTM A-182, Grade F304
Impact Limiter	
Attachment Lugs	ASTM A-479, Type 304
Closure Lid (original):	
Inner Plate	ASTM A-240, Type 304
Outer Plate	ASTM A-240, Type 304
Lead Shielding	ASTM B-29
Closure Lid (optional):	
Outer plate	XM-19
Shield disk	
Plate	ASTM A-240, Type 304
Lead shielding	ASTM B-29
Closure Bolts	ASTM A-564, Type 630
Impact Limiters:	
Energy Absorbing Material	Balsa and Redwood
External Shell and Structure	ASTM A-240, Type 304
Attachment Bolts	ASTM A-564, Type 630
Tiedown/Lifting Devices:	
Cask Trunnions	ASTM A-182 Grade F304

cask body bottom is 6.06 inches. All structural welds in the shell assembly including containment boundary welds are full penetration welds.

Attachments and subassemblies associated with the cask body include:

- Lifting and tiedown trunnions (See Section 1.2.1.4)
- Impact limiter attachment lugs (See Section 1.2.1.3)
- Cask body drain penetration (See Section 1.2.1.6)

1.2.1.2 Closure Lid

The design of the closure lids is shown on drawings 990-705, 990-706, and 990-710. The original closure lid consists of two parallel flat plates separated by lead shielding. The outer plate is 2.50 inches thick and the inner plate is 0.50 inches thick. Both plates are made from ASTM A240, Type 304 stainless steel. The outer plate forms the lid portion of the containment boundary. The lead shielding between the two plates is 5.94 inches thick. The optional closure lid has the same lid plate as the original outer lid plate. The optional closure lid includes a separate shield disk consisting of a lead disk 5.68 inches thick encased by a steel plate (0.375 inch top, 0.5 inch side and bottom). The lid plate is constructed of XM-19 material while the shield disk shell is ASTM A240, Type 304 stainless steel. The perimeter of the outer plate (or lid flange) has 16 equally spaced holes for the closure bolts which are located on a 45 inch diameter bolt circle. The closure bolts are nominally 1.5 inch diameter with an undercut shank diameter of 1.32 inches. Two concentric dovetail seal grooves are machined in the underside of the lid. Silicone O-rings are installed in these seal grooves. A leak test port provides access to the region between the two seals for assembly verification leak testing conducted prior to every transport. The leak test port is closed when not in use by a threaded plug. Only the inner O-ring

surfaces are flush. In the original lid a lead-filled stainless steel tube is attached to the underside of the blind flange to maintain the shielding effectiveness at the penetration location. The optional lid penetration extends only through the lid plate so this tube is not required for the optional lid. A single silicone O-ring is mounted in a dovetail groove machined in the underside of the penetration cover. Leak testing of the penetration is accomplished using a vacuum bell as described in Chapter Seven.

The penetration located near the bottom of the cask body is designated as the drain port. Access to this penetration is located on the side of the cask body near the bottom plate. A double-wall stainless steel tube extends from the access location, through the lead of the bottom assembly, and through the inner bottom plate of the cask cavity. The 0.75 inch nominal diameter, schedule 80 inner pipe serves a containment boundary function. The inner pipe is located within a 1.25 inch nominal diameter schedule 40 outer pipe. The drain pipe layout between the exterior access location and the cavity interior includes two 90° bends. The double-wall arrangement and 90° bending accommodates thermal expansion of the inner tube in the event that temperature differences develop during operations involving the drain port. The drain port permits draining of the cask cavity with the TN-RAM in a vertical orientation. A Hansen quick connect coupling is provided at this penetration. A blind flange which maintains the containment boundary at this point is secured over the drain port by four bolts. A single silicone O-ring is located in the seal groove machined in the penetration cover. Leak testing of this penetration is accomplished using a vacuum bell as described in Chapter Seven.

The safety analysis of the TN-RAM takes no credit for the containment provided by secondary containers.

The quantity of radioactive material is limited to a maximum of 1272 A_2. The radioactive material is primarily in the form of neutron activated metals, or metal oxides in solid form. Surface contamination may also be present on the irradiated components. When a wet load procedure (i.e., in-pool) is followed for cask loading, cask cavity draining and drying is performed in order to ensure that free liquids do not remain in the package during transport.

The decay heat load of the radioactive material is limited to a maximum of 300 watts.

The TN-RAM is designed for shipment of various types of irradiated reactor hardware. The payload will vary from shipment to shipment and will consist predominantly of the following components either individually or in combinations:

1. BWR Control Rod Blades
2. BWR Local Power Range Monitors (LPRMs)
3. BWR Fuel Channels
4. BWR Poison Curtains
5. PWR Burnable Poison Rod Assemblies (BPRAs)

1.3 Appendix

TN-RAM DRAWINGS / DOCUMENTS

DWG/DOC'T NO.	TITLE	REVISION
990-701	TN-RAM Packaging Assembly	7
990-702	Shell Assembly	6
990-703	Shell Parts List and Details	8
990-704	Shell Details	4
990-705	Lid Assembly	5
990-706	Lid Details	3
990-707	Impact Limiter Assembly	3
990-708	Impact Limiter Details	6
990-709	Impact Limiter Attachment Bolt	1
990-710	Optional Lid and Shield Disk	0
E-10615	Lead Pouring Requirements	0

PROPRIETARY AND
SECURITY RELATED INFORMATION
WITHHELD UNDER 10 CFR 2.390

ALL DIMENSIONS ARE NOMINAL UNLESS A SPECIFIC TOLERANCE IS INDICATED WITH THE DRAWING DIMENSION

DIMENSIONS ARE IN INCHES AND DEGREES UNLESS OTHERWISE SPECIFIED. DIMENSIONING IN ACCORDANCE WITH ASME Y14.5M

INTERPRETATION OF WELD SYMBOLS PER ANSI / AWS 2.4

U.S. Patent No. 4,780,269
Proprietary Property of
Transnuclear, Inc.

TRANSNUCLEAR
AN AREVA COMPANY

SAFETY ANALYSIS REPORT

TN-RAM PACKAGING
ASSEMBLY

DRAWING NO	SCALE	SHEET	REVISION
990-701	NONE	1 OF 1	7

990-703

1 OF 1

PROPRIETARY AND SECURITY RELATED INFORMATION WITHHELD UNDER 10 CFR 2.390

ALL DIMENSIONS ARE NOMINAL UNLESS A SPECIFIC TOLERANCE IS INDICATED WITH THE DRAWING DIMENSION

DIMENSIONS ARE IN INCHES AND DEGREES UNLESS OTHERWISE SPECIFIED. DIMENSIONING IN ACCORDANCE WITH ASME Y14.5M

INTERPRETATION OF WELD SYMBOLS PER ANSI / AWS 2.4

U.S. Patent No. 4,760,269
Proprietary Property of
Transnuclear, Inc.

TRANSNUCLEAR
AN AREVA COMPANY

SAFETY ANALYSIS REPORT
TN-RAM PACKAGING
SHELL
PARTS LIST & DETAILS

DRAWING NO	SCALE	SHEET	REVISION
990-703	NONE	1 OF 1	8

PROPRIETARY AND
SECURITY RELATED INFORMATION
WITHHELD UNDER 10 CFR 2.390

ALL DIMENSIONS ARE NOMINAL UNLESS A SPECIFIC TOLERANCE IS INDICATED WITH THE DRAWING DIMENSION

DIMENSIONS ARE IN INCHES AND DEGREES UNLESS OTHERWISE SPECIFIED. DIMENSIONING IN ACCORDANCE WITH ASME Y14.5M

INTERPRETATION OF WELD SYMBOLS PER AWSI / AWS 2.4

U.S. Patent No. 4,780,259
Proprietary Property of
Transnuclear, Inc.

TRANSNUCLEAR
AN AREVA COMPANY

SAFETY ANALYSIS REPORT

TN-RAM PACKAGING
SHELL DETAILS

DRAWING NO.	SCALE	SHEET	REVISION
990-704	NONE	1 OF 1	4

990-710

1 OF 1

PROPRIETARY AND SECURITY RELATED INFORMATION WITHHELD UNDER 10 CFR 2.390

ALL DIMENSIONS ARE NOMINAL UNLESS A SPECIFIC TOLERANCE IS INDICATED WITH THE DRAWING DIMENSION

DIMENSIONS ARE IN INCHES AND DEGREES UNLESS OTHERWISE SPECIFIED. DIMENSIONING IN ACCORDANCE WITH ASME Y14.5M

INTERPRETATION OF WELD SYMBOLS PER AWSI / AWS 2.4

U.S. Patent No. 4,750,269
Proprietary Property of Transnuclear, Inc.

TRANSNUCLEAR
AN AREVA COMPANY

SAFETY ANALYSIS REPORT
TN-RAM PACKAGING
OPTIONAL LID ASSEMBLY
AND DETAILS

DRAWING NO.	SCALE	SHEET	REVISION
990-710	NONE	1 OF 1	0

CHAPTER TWO
STRUCTURAL EVALUATION

TABLE OF CONTENTS

Page

2.10.2 Structural Analysis of Impact Limiters 2.10.2-1

2.10.2.1 Introduction

2.10.2.2 Design Description

2.10.2.3 Design Criteria

2.10.2.4 Analysis for 30 Ft. Free Drop Accident Conditions

2.10.2.5 Summary Description of ADOC Computer Code

2.10.2.6 Analysis For One Foot Drop

Normal Condition

2.10.2.7 Impact Limiter Attachment Analysis

2.10.2.8 Impact Limiter Pressure Analysis

2.10.3 Impact Limiter Testing 2.10.3-1

2.10.4 Bucking Analysis of Inner Containment Cylinder 2.10.4-1

2.10.4.1 Loading

2.10.4.2 Analysis

2.10.5 Drain Line Evaluation 2.10.5-1

2.10.6 Impact Limiter Wood Specification 2.10.6-1

2.10.7 Lead Pouring Procedure 2.10.7-1

2.10.8 Optional Lid 2.10.8-1

CHAPTER TWO
APPENDIX 2.10.8

LIST OF FIGURES

		Page
Figure 2.10.8-1	Finite Element Model Original Lid with Applied Loads and Boundary Condition	2.10.8-19
Figure 2.10.8-2	Stress Intensity Plots for Original Lid	2.10.8-20
Figure 2.10.8-3	Finite Element Model Optional Lid with Applied Loads and Boundary Condition	2.10.8-21
Figure 2.10.8-4	Stress Intensity Plots for Optional Lid	2.10.8-22

LIST OF TABLES

Table 2.10.8-1	Summary of Results for Original and Optional Lids	2.10.8-10
Table 2.10.8-2	Design Parameters for Lid Bolt Analysis	2.10.8-11
Table 2.10.8-3	Allowable Stresses in Closure Bolts for Normal Conditions of Transport	2.10.8-13
Table 2.10.8-4	Allowable Stresses in Closure Bolts for Hypothetical Accident Conditions	2.10.8-14
Table 2.10.8-5	Summary of Bolt Individual Loads	2.10.8-15
Table 2.10.8-6	Normal and Hypothetical Accident Conditions Load Combinations	2.10.8-16
Table 2.10.8-7	Closure Bolt Stress Analysis Results	2.10.8-17
Table 2.10.8-8	Summary of Stress Ratios	2.10.8-18

CHAPTER TWO
STRUCTURAL EVALUATION

2.1 STRUCTURAL DESIGN

This chapter, including its appendices, presents the structural evaluation of the TN-RAM packaging. This evaluation consists of numerical analyses which demonstrate that the TN-RAM satisfies applicable requirements for a Type B(U)-96 packaging qualified for shipments containing less than 1272 times Type A_2 quantities as listed in 10CFR71.

2.1.4 Discussion

The structural integrity of the packaging under normal conditions of transport and hypothetical accident conditions specified in 10CFR71 is shown to meet the design criteria described in Section 2.1.2. The TN-RAM is a transport packaging which consists of four major structural components: the shell or cask body assembly, the lid assembly, and the top and bottom impact limiters. These components are described in Chapter One and are shown on drawings provided in Section 1.3, Appendix.

The shell or cask body cylinder assembly is an open ended (at the top) cylindrical unit with an integral closed bottom end. This assembly consists of concentric inner and outer ASTM A240 Type 304 stainless steel shells welded to a massive closure flange at the lid end. The annulus between the shells is filled with lead shielding. The lead is poured into the annulus in the molten state using a carefully controlled procedure. A buckling analysis of the inner containment cylinder during the lead pouring process and cool down is provided in Appendix 2.10.4. Trunnions welded to the 1.5 inch thick outer shell are used to lift the packaging and to support it during

transport. The flat bottom end of the outer shell is 2.50 in thick. This cask body assembly is provided with a thermal insulation sleeve, a drain line and impact limiter attachment lugs. The portion of the containment boundary in the cask body cylinder assembly includes the 0.75 in think inner shell cylinder and .50 inch inner shell bottom, the closure flange out to the seal seating surface and the drain line out to the drain coupling housing with its cover, seal and bolts.

Two lid options are available, the original one-piece lid with integral lead shielding and the optional lid design with separate lid plate and shield disk.

The original lid assembly is comprised of a 2.50 in thick outer plate and a 0.50 inch thick inner liner, both made of ASTM A240 Type 304 stainless steel, and 5.94 in of lead shielding.

The optional lid assembly is comprised of a 2.50 in thick lid plate made of XM-19 and a separate shield disk consisting of an ASTM A240 Type 304 stainless steel liner (0.375 inch top, 0.5 inch side and bottom), surrounding a 5.68 in thick lead shielding disk.

The lid flange is grooved to retain the closure seals and is actually an integral radial extension of the outer lid plate. This outer lid plate and the seals complete the packaging containment boundary. The flange of the lid assembly is bolted to the closure flange of the shell or body cylinder assembly with 16 high strength closure bolts.

These two components, the lid and body cylinder, form the cask body. This unit together with the two impact limiters forms the packaging which meets all requirements for the Type B(U)-96 packaging. This packaging is designed to meet all of the applicable 10CFR71 requirements for a maximum normal operating pressure within the containment boundary of 30 psig.

The wall thickness of the outer shell and end plates in the cask body enables the packaging to withstand the hypothetical puncture accident. This shell is designed to be both strong and ductile in order to be capable of withstanding the punch loading. The top and bottom impact limiters absorb the kinetic energy for the 1 ft. normal and 30 ft. hypothetical accident free drops. The thermal insulation sleeve and the impact limiters insulate the cask body assembly and prevent both lead

melting and excessive seal temperatures under the thermal accident.

Table 2.1-1 summarizes the specific evaluation methods that are used to demonstrate compliance with the regulations. Numerical analyses have been performed for the normal and accident conditions as well as for lifting and tiedown loads. In some cases testing was performed to provide input to confirm analytical assumptions (e.g. wood sample static crush tests). Available test results are referenced and applicable data provided in this SAR. In general, numerical analyses have been performed for all of the regulatory events. These analyses, as well as all applicable tests, are summarized in the main body of the section and described in detail in the appendices provided as Section 2.10.

Appendix 2.10.1 presents the structural analysis of the cask body. Appendix 2.10.2 provides the impact limiter structural analysis as well as the overall system dynamic analysis. Appendix 2.10.3 describes the referenced impact limiter tests. Appendix 2.10.4 presents the buckling analysis of the inner container during fabrication and operation. Appendix 2.10.5 presents the structural evaluation of the drain line. Appendix 2.10.8 presents analyses dealing with the optional lid design that is now part of this package.

2.1.2 Design Criteria

The packaging consists of four major components:

- Cask Body Cylinder Assembly
- Lid Assembly
- Top Impact Limiter
- Bottom Impact Limiter

The structural design criteria for these components are described below.

In the special case of bolting, the average bolt stress is limited to $\frac{2}{3}$ S_y and the maximum stress is limited to S_y for all conditions. The lid bolts are also evaluated against NUREG/CR 6007 allowables in Appendix 2.10.8.

The head-to-shell and flange-to-shell junctions are gross structural discontinuities as defined in NB-3213.2. The membrane stresses in the edges of the heads and the ends of the cylinders produced by mechanical loadings are local primary membrane stresses, P_l, as defined in NB-3213.10. The bending stresses at these locations are secondary stresses, Q, per the examples in Tables NB-3217-1 and Reg. Guide 7.6, Position B3. This classification of stress intensities is limited to the local region of length $1.0\sqrt{Rt}$ as defined in NB-3213.10.

The location where the inner end ring is attached to the cask closure flange is not treated as a local region.

The containment boundary is entirely austentic stainless steel which is ductile even at low temperature. Thus, as indicated in Regulatory Guide 7.6, Section B, brittle fracture is precluded.

The normal and accident conditions are described in detail below. The stress intensity limits from Table 2.1-2 are directly applied to evaluate the results from the analyses for these conditions. These criteria are consistent with Regulatory Guide 7.6 and Section III, Subsection NB, Article NB-3200 and Appendix F of the ASME Boiler and Pressure Vessel Code.

2.1.2.2 Non Containment Structure

The outer shell of the cask body assembly is the primary non containment structure. The trunnions and impact limiter attachment lugs are directly welded to the shell and are also non containment structural

component. In addition, the inner shell or liner of the original lid is a non containment structural component as is the plate of the optional shield disk. The portion of the impact limiter that must remain intact to prevent separation from the cask body during impact is also a non containment structure.

The non containment structures have various structural functions, but containment of radionuclides is not required of these components. These non containment structures position the lead shielding and protect the lead during the puncture and thermal accidents. The trunnions are used to lift the cask and support it during transport. These components also meet Code requirements as far as possible in that they use Code materials, fabrication techniques, weld configurations, etc. One notable exception is the fact that non containment welds need not be radiographed. Non containment structural components are generally welded or attached to the containment boundary components after completion of required examinations of the containment boundary. In many cases, the final (non containment) weld(s) cannot be radiographed because of lack of accessibility to both sides of the weld or because of the presence of lead shielding.

The stress limits for the TN-RAM non containment structure are summarized in Table 2.1-3. Again, the limits are multiples of the ASME Code values of S_m, S_y or S_u as listed below in Section 2.3. These criteria are applied directly to evaluate the results from the analyses of the principal structural components of the cask (in addition to the containment boundary) as outlined in Regulatory Guide 7.6.

It should be noted that exceptions to the linear elastic analysis method generally used are made for the end drop accidents and for the local shearing puncture evaluation of the outer shell of the cask body during the 40 inch drop onto the puncture bar. This local evaluation is performed in Section 2.7.2 using the Nelms puncture equation to ensure that the lead shielding is not exposed before the

2.2 WEIGHTS AND CENTER-OF-GRAVITY

The gross weight of the TN-RAM package (including contents) is 80,000 pounds. Approximate weights of major individual components or subassemblies are tabulated below:

Cask Body Cylinder Assembly (including thermal insulation and all attachments such as tiedown trunnions and impact limiter attachment lugs.)	59,000
Lid Assembly (optional lid plate is 1400 lb and shield disk is 3300 lb)	4,700
Top Impact Limiter	3,400
Bottom Impact Limiter	3,400
Net Packaging (empty) Weight	70,500
Payload	9,500
Gross Package Weight	80,000

The center of gravity of the unloaded packaging is located on the cylindrical axis at essentially the geometric center of the packaging which is 64.5 inches from either end of the cask body or 87.0 inches from the outside end of the impact limiter.

The center of gravity for a loaded packaging is located below the cylindrical axis and within approximately 6 inches of the geometric center. If the cargo is evenly distributed, the center of gravity of the loaded packaging returns to the geometric center.

Table 2.3-1
Mechanical Properties of Structural Materials

Material Specification (Nominal Composition)	Application [1]	Minimum Yield Strength S_y, psi	Minimum Ultimate Strength S_u, psi	Design Stress Intensity (2) S_m, psi	ASME Data Source (3)
ASTM A240 Type 304 (18 Cr – 8 Ni)	Cask Body and Lid Shells Drain Fitting Insulation Shell Containment Penetration Penetration Covers and Bolts	30,000	75,000	20,000	Table I-1.2
ASTM A240 Type XM-19 (22Cr-12Ni-5Mn)	Optional Lid Plate	55,000	100,000	33,300	Table I-1.2
ASTM A182 Grade F304 (18 Cr – 8 Ni)	Body Flange Trunnions	30,000	70,000	20,000	Table I-1.2
ASTM A479 Type 304 (18 Cr – 8 Ni)	Test Port Plug Impact Limiter Lug	30,000	75,000	20,000	Table I-1.2
ASTM A312 Type 304 LN (18 Cr – 8 Ni)	Shield Plug and Drain Tubing	30,000	75,000	20,000	Table I-1.2
ASTM A193 Grade B8 Class 1 (18 Cr – 8 Ni)	Shield Plug Bolts	30,000	75,000	10,000	Table I-1.3
ASTM A564 Type 630 (17CR - 4Ni – 4Cu)	Lid Closure Bolts Impact Limiter Attachment Bolts	115,000	140,000	38,300	Table I-1.3

Table 2.3-2
Temperature Dependent Material Properties

Material Specification	Material Property[1]	Temperature °F							ASME Data Source [2]
		70	100	200	300	400	500	600	
ASTM A240 Type 304 and	S_m (psi)	-	20,000	20,000	20,000	18,700	17,500	16,400	Table I-1.2
ASTM A182 Grade F304 and	E ($x10^6$ psi)	28.3	-	27.6	27.0	26.5	25.8	25.3	Table I-6.0
ASTM A479 Type 304 and ASTM A312 Type 304 LN	α ($x10^{-6}$ in/in/°F)	-	8.55	8.79	9.00	9.19	9.37	9.53	Table I-5.0
ASTM A240 Type XM-19	S_m (psi)	-	33,300	33,100	31,400	30,400	29,700	29,200	Table I-1.2
	E ($x10^6$ psi)	20.3	-	27.6	27.0	26.5	25.8	25.3	Table I-6.0
	α ($x10^{-6}$ in/in/°F)	-	8.30	8.48	8.65	8.79	8.92		Table I-5.0
ASTM A193 Grade B8 Class 1	S_m (psi)	-	10,000	8,500	7,300	6,500	6,100	5,800	Table I-1.3
	E ($x10^6$ psi)	28.3	-	27.6	27.0	26.5	25.8	25.3	Table I-6.0
	α ($x10^{-6}$ in/in/°F)	-	8.55	8.79	9.00	9.19	9.37	9.53	Table I-5.0
ASTM A564 Type 630	S_m (psi)	-	38,300	35,400	33,900	32,700	31,700	30,700	Table I-1.3
	E ($x10^6$ psi)	28.3	-	27.6	27.0	26.5	25.8	25.3	Table I-6.0
	α ($x10^{-6}$ in/in/°F)	5.89	5.89	5.90	5.90	5.90	5.90	5.91	Table I-5.0

payload) of 80,000 lbs. is conservatively used for all lifting and tie down calculations. The lifting condition is analyzed in Section 2.5.1 to demonstrate a minimum safety factor of three against yield in accordance with 10CFR71.45(a).

There are no lifting lugs on the cask lid or shield disk (for optional lid design) for the purpose of lifting and handling the lid. A special fixture will be bolted to the lid or shield disk for that purpose. In the transport configuration, access to the lid lifting fixture bolt holes is prevented by the front impact limiter. Therefore, no transport safety analysis of lid lifting is required.

In the transport configuration, the regulatory tie down loads [10CFR71.45(b)(1)] are shared unequally between the front and rear trunnions because of the design of the transport frame. As described above, the loading condition used for transport includes the total weight of the assembled cask with maximum payload and impact limiters (80,000 lbs.). The 2 G vertical load is equally shared among four trunnions (two front and two rear). The 5 G load component which is transverse to the direction of travel is shared between one front and one rear trunnion on the same side of the cask. The design of the transport frame saddles which support the trunnions is such that the 5 G loading can only result in a uniform compressive force applied to the trunnion base plate flange. The 10 G load component applied in the direction of travel is shared equally between the two rear trunnions. The design of the transport frame allows the front trunnion to move in the cask axial direction (direction of travel) in relation to the transport frame in order to prevent constrained differential thermal expansion between the cask and transport frame. Therefore the front trunnion cradles will not apply any portion of the 10 G load component to the front trunnions.

The maximum membrane stress intensity is 20,219 psi and the maximum membrane plus bending stress intensity is 23,836 psi. The maxima occur at 0.83 hrs., after the temperatures have equalized.

These stresses are evaluated for a metal temperature of 600°F, which is somewhat higher than the temperatures input to the model. These stress results are less than the allowables for membrane stress intensity of 39,360 psi and membrane plus bending stress intensity of 59,040 psi. The evaluation of the extreme total stress intensity range between the initial state, normal operating conditions and accident conditions is provided below in Section 2.7.6.

2.7.4 Immersion – Fissile Material

The criticality evaluation presented in Section 6.0 considers the effect of water in leakage. Thus, the requirements of 10CFR71.73 (c) (4) are met.

2.7.5 Immersion – All Packages

The combination of 21 psig external pressure and minimum internal pressure (assumed conservatively as 0 psia) produces a maximum differential pressure across the wall of the packaging of 35.7 psi. Note that the immersion pressure currently required by 10CFR71.73(c) is 21.7 psig. This difference is considered negligible due to the low stress levels reported below. The stresses in the cask body due to the inward pressure difference of 36 psi combined with bolt preload are presented in Table 2.7-14. The stresses presented are very low compared to the stress allowables of Section 2.1.2. The highest stress intensity of any category is 4,071 psi, almost negligible compared to the allowables, always in excess of 48,000 psi.

APPENDIX 2.10.1
STRUCTURAL ANALYSIS OF CASK BODY

This appendix presents the structural analyses of the TN-RAM cask body including the cylindrical shell assembly and bottom assembly, the lid, the lid bolts, the penetration covers, and trunnions. The specific methods, models and assumptions used to analyze the cask body for the various individual loading conditions specified in 10CFR71.71 and 10CFR71.73 are described. Stress results are reported at selected locations for each load case. Maximum stresses from this appendix are evaluated in Sections 2.6 and 2.7 of Chapter Two where the load combinations outlined in Regulatory Guide 7.8 are performed and the results evaluated against the ASME Code and Regulatory Guide 7.6 design criteria described in Section 2.1.2.

The TN-RAM cask body structural analyses generally use static or quasistatic linear elastic methods so that combinations of loads can be examined by superimposing the results from individual loads. The stresses and deformations due to the applied loads are generally determined using the ANSYS* computer program. Exceptions include the analyses for the unusual conditions of end impact where unbonded lead may slide relative to the inner and outer shells and those for the local effects at the trunnions and the lid bolts.

The analyses contained in this appendix were done using the original one-piece lid option. The optional two-piece lid/shield disk design is analyzed in Appendix 2.10.8 and is shown to be stronger than the original lid. Therefore the stresses calculated in this Appendix are bounding.

* ANSYS, Engineering Analysis Systems User's Manual, Revision 4.3, Volumes I and II.

The three analysis methods described in this appendix used to evaluate the cask body for the individual loading conditions are:

- ANSYS Analysis – Axisymmetric and Asymmetric Loads — Section 2.10.1.1
- Bijlaard Trunnion Analysis — Section 2.10.1.2
- Lid Bolt Analysis — Section 2.10.1.3

The Bijlaard trunnion analysis is performed to determine the local stresses in the outer shell at locations that correspond to stress reporting locations selected for the ANSYS analyses. This permits the localized trunnion induced stresses to be easily combined with stresses obtained from appropriate ANSYS load cases. The method of combining stress results from individual load cases to evaluate the required load combinations is discussed in Section 2.6 of Chapter Two for normal conditions of transport and Section 2.7 for hypothetical accident conditions.

The lid bolt analysis consists of two hand calculations which determine the maximum stresses in the lid bolts under the worst accident loading condition. The results from the lid bolt analysis are not combined with results from any other analysis. The first analysis is discussed in Section 2.10.1.3 and is based on the original lid design. The second analysis of the optional lid design follows the methodology of NUREG/CR-6007 and is presented in Appendix 2.10.8.

The evaluation of the cask body under the 40 inch puncture event is described in Section 2.7.2.

between the two shells of the cask and the lead. Stresses occur due to the difference in coefficients of expansion of lead and stainless steel.

9. Thermal Accident Condition

An ANSYS transient thermal analysis of the cask for the 30 minute thermal accident is reported in Chapter Three. The initial condition is steady state at 100°F ambient conditions with maximum decay heating. The initial steady state condition is followed by a 0.5 hour severe thermal transient which is then followed by a cool-down period. The temperatures from the thermal analysis are reported for each time-step during the transient.

The thermal stresses calculated in this section are based on temperatures that were obtained in the original thermal accident analysis. The thermal analysis in Chapter 3, Section 3.5.3 in this revision of the SAR is an updated analysis that was done to meet current post-fire ambient conditions. Specifically insolation is now applied after the fire. The results of the analysis documented in Chapter 3, Section 3.5.5 show that the temperatures used in the thermal stress calculations below are bounding.

The temperatures throughout the package at the time where the individual temperatures peak (0.56 hrs.) and after they equalize (0.83 hrs.) are summarized below:

Temperature (time=0.56 hrs.)			Temperature (time=0.83 hrs.)		
Inner Shell	=	411°F	Inner Shell	=	460°F
Outer Shell Sides	=	560°F	Outer Shell Sides	=	470°F
Outer Shell Ends	=	163°F	Outer Shell Ends	=	154°F
Lead	=	473°F	Lead	=	460°F

These two sets of temperatures are input to the axisymmetric finite element model to calculate the component stresses due to differential thermal expansion (2 cases).

APPENDIX 2.10.8
OPTIONAL LID AND LID BOLT EVALUATIONS

2.10.8.1 Introduction

This appendix contains the evaluation of changes due to license update to a B(U)-96 and an optional lid design.

A specific use of the TN-RAM cask requires the use of a shield disk installed in the top of the cask cavity after loading the cask from inside a hot cell. Therefore an optional lid design has been created to accommodate this operational requirement. The original lid includes an integral shielding cavity filled with lead. This section of the lid is suspended below the lid closure plate and fits closely in the shell flange opening. The steel shell surrounding the lead forms the majority of the lid containment boundary. The optional lid design uses only the outer plate of the original lid and is considered the entire containment boundary. The shielding portion of the original lid is now contained in a separate shield disk that replicates the shielding capabilities of the original lid. The shield is provided with its own threaded lifting inserts so that it can be installed or removed independently of the lid plate. The optional lid design is shown in Appendix 1.3, Drawing 990-710.

Another modification present in the optional lid is a redesign of the vent port. The current design has a vent port consisting of a 1.25 inch tube that extends through both the lid plate and the shielding portion of the lid. The opening is sealed by a coverplate that is installed in a recess in the lid plate and is secured by four bolts. The optional lid has the same closure design but the port extends only through the lid plate. A series of milled channels in the shield disk shell ensure an adequate flow path between the vent port opening and the cask cavity. An alignment mark on the shield disk opposite the alignment mark on the cask recess ring is used to correctly orient the shield disk during installation so that the milled channels are positioned to match the position of the vent port when the lid is installed.

As a result of the optional lid design, additional calculations are performed to assure the continued ability of the TN-RAM to meet all requirements of 10CFR71. First, a calculation is provided to demonstrate that the optional lid is stronger than the original lid due to use of stronger lid plate material. This makes the structural calculations with the original lid design bounding with respect to the optional lid design. Calculations are also performed to demonstrate that the bolted closure of the optional lid meets the requirements of 10CFR71 based on analyses done following the methodology NUREG/CR-6007 Ref. [4].

2.10.8.2 Lid Strength Evaluation

This section documents the analyses performed to demonstrate that the optional lid is stronger than the original lid design. The stress ratios of the TN-RAM original lid and the optional lid for a 30 psig internal pressure load case are used for this evaluation. The internal pressure load case is a representative load case for all other loadings, since all other loads are treated as pressure loads for the lid structural analysis.

2.10.8.2.1 Methodology

The original and optional lids are analyzed for an internal pressure of 30 psig. A 2D axisymmetric ANSYS [8] model was used. The material properties at 200 °F used for the analysis are provided in Tables 2.3-1 and 2.3-2 of Chapter 2. The stresses are compared against stress limits from Ref. [3].

2.10.8.2.2 Model Description

The steel components are modeled as elastic material. The lead material is modeled using the bilinear kinematic hardening method (TB, BKIN). The material behavior is described by a bilinear total stress-total strain curve starting at the origin and with positive stress and strain values. The initial slope of the curve is taken as the elastic modulus of the material. At the specified yield stress, the curve continues along the second slope defined by the tangent modulus. It is assumed that tangent modulus amounts to 1% of elastic modulus.

For both types of lid an internal pressure of 30 psig is applied. The bolt preload and gasket seal pressure is also applied.

2D axisymmetric ANSYS finite element models are used in this calculation. The original lid design includes the lead box welded to the lid. ANSYS Plane42 elements with axisymmetric options are used to model the lid assembly. A-240 Type 304 is used for all steel components.

For the optional lid design, the lead box is separate. Only the lid is analyzed for an internal pressure of 30 psig with bolt preload and gasket seating pressure included. A-240 Type XM-19 material is used for the lid. The mesh density and the boundary conditions are identical for both the lid options.

For both, the original and the optional lid designs, the bolts are modeled using ANSYS Beam3 elements.

ANSYS Contac12 elements are used to model the interface between the lead and the steel components and the interface between the lid and the flange. The preload was simulated using ANSYS Contac12 elements with interference between the bolt head and the lid.

Figures 2.10.8-1 and 2.10.8-3 show the finite element model with the applied load and the boundary conditions for original and optional lid, respectively.

An interference is provided between the contact elements at the bolt head and the lid, and no other loads are applied. The resultant bolt force is calculated and the interference is adjusted to apply a preload of 60,606 lbs/bolt.

The second run consists of an internal pressure of 30 psig, seal loads of 12,840 lbs and 13,390 lbs for inner and outer seals, respectively, and the above mentioned preload. The stresses are linearized across the thickness of the lid and compared against membrane and membrane plus bending stress allowables.

2.10.8.2.3 Results/Conclusion

For both lid options the stresses are linearized through the thickness of the lids. Table 2.10.8-1 summarizes the linearized stress result and stress ratios for the original and optional lids. Figures 2.10.8-2 and 2.10.8-4 show the stress intensity plots for original and optional lid design respectively.

The stress ratios for the optional lid are lower than the stress ratios for the original lid. Therefore, it is concluded that the cask structural evaluation with the original lid bounds the results of the cask with the optional lid design.

2.10.8.3 Lid Closure Bolt Evaluation

This section calculates stresses in the closure bolts for Normal Conditions of Transport (NCT) and Hypothetical Accident Conditions (HAC). The stress analysis is performed in accordance with NUREG/CR-6007 [4]. These stresses are used to demonstrate the ability of TN-RAM closure to maintain a leak tight seal for the normal and hypothetical accident loading conditions.

The TN-RAM optional lid closure arrangement is shown in Appendix 1.3. The optional lid consists of a circular plate that is nominally 2.50 inches thick, except at the lid flange interface with the cask wall where it is 2.38 inches thick. Close fitting alignment pins ensure that the lid is centered in the cask. The lid is bolted directly to the end of the containment vessel flange by the sixteen high strength alloy steel bolts. The bolt material is A-564 Type 630 Condition H1100 which has a minimum yield strength of 115 ksi at room temperature.

In order to minimize bolt forces and bolt failures in the design of the TN-RAM, the following recommendations are taken directly from Reference [4] and employed in the TN-RAM closure system:

- Protect closure lid from direct impact to minimize bolt forces generated by free drops. (use impact limiters).
- Apply sufficiently large bolt preload to minimize fatigue and loosening of the bolts by vibration.
- Lubricate bolt threads to reduce required preload torque and to increase the predictability of the achieved preload.
- Use a closure lid design which minimizes the prying actions of applied loads.
- Pay special attention to the interaction between the preload and the thermal load and between the preload and the prying force.

2.10.8.3.1 Lid Closure Bolt Analysis

Lid Bolt Design Parameters

Symbols, terminology, geometries, and input data for this analysis are summarized in Table 2.10.8-2. The material properties and material allowables for NCT and HAC conditions are presented in Tables 2.10.8-3 and 2.10.8-4. A maximum temperature of 200 °F is used in the lid bolt region based on the results of thermal analysis documented in Chapter 3.

Lid Bolt Individual Load Calculations

The results of the individual load calculations using the formulas described in reference [4] are listed in Table 2.10.8-5.

Lid Bolt NCT and HAC Load Combinations

A summary of normal and accident condition load combinations is presented in Table 2.10.8-6. The method used for the load combination is taken from Table 4.9 of reference [4].

Lid Bolt Stress Calculations

Table 2.10.8-7 provides summary information regarding lid bolt stresses. The stress values are based on formulas shown below and are from Ref. [4] Table 5.1.

An average tensile stress in bolts, S_{ba}, is determined by means of formula

$$S_{ba} = 1.2732 \frac{F_a}{D_{ba}^2}$$

Bending stress in bolts, S_{bb}, is calculated by means of formula

$$S_{bb} = 10.186 \frac{M_{bb}}{D_{bb}^3}$$

An average shear stress S_{bs} caused by shear bolt force F_s is $S_{bs} = 0$.

Maximum shear stress caused by the torsional moment M_t is

$$S_{bt} = 5.093\frac{M_t}{D_{bt}^3}$$

Maximum Combined Stress Intensity is calculated as

$S_{bi} = [(S_{ba} + S_{bb})^2 + 4(S_{bs} + S_{bt})^2]^{0.5}$

Stress Ratios

A summary of the stresses calculated above is listed in the following Table 2.10.8-8. The assessment is based on Ref. [4] Table 6.1 and Table 6.3.

Bolt Bearing Stress Calculation

The maximum axial force is 76.4 kips (see Table 2.10.8-6) for normal conditions. A bolt hole of 1.625" diameter is used.

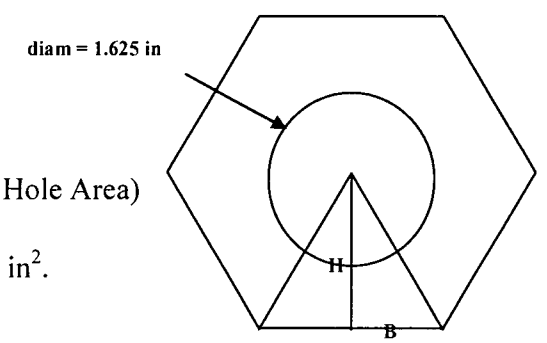

H = 2.375/2 = 1.1875in.

Bearing area = (Total Area Under Bolt Head) – (Bolt Hole Area)

$Hb/2*Hb/2*TAN(30°)*6- PI()/4*Dh^2 = 2.811\ in^2$.

The total bearing area is 2.811 in^2.

The bearing stress for normal conditions is 76.4/2.811 = 27.2 ksi.

The allowable normal condition bearing stress on the lid is taken to be the yield stress of the lid material at 200 °F. The lid material yield strength at 200 °F is 47.1 ksi (A-240 Type XM19).

Minimum Engagement Length Calculation

For a 1½ – 8UN – 2A bolt, the material is A-564 Type 630 Condition H1100, with

Su = 140 ksi at 200 °F

The cask flange material is A-240 Type 304 with

Su = 71.0 ksi at 200 °F

The minimum engagement length, L_e, for the bolt and flange is (Ref. 6, Page 1324),

$$L_e = \frac{2A_t}{3.146K_{n\max}\left[\frac{1}{2} + .57735n\left(E_{s\min} - K_{n\max}\right)\right]}$$

Where,

A_t = tensile stress area $A_t = 0.25 \times \pi \times D_{th}^2 = 0.25 \times \pi \times 1.3782^2 = 1.4918$ in.^{2},

n = number of threads per inch = 8,

$K_{n\,max}$ = maximum minor diameter of internal threads = 1.3900 in, [6], p. 1556

$E_{s\,min}$ = minimum pitch diameter of external threads = 1.4093 in, [6], p. 1556

$D_{s\,min}$ = minimum major diameter of external threads = 1.4828 in. [6], p. 1556

Substituting the values given above,

$$L_e = \frac{2(1.3782)}{(3.1416)1.390\left[\frac{1}{2} + .57735(8)(1.4093 - 1.390)\right]} = 1.160 \text{ in.}$$

$$J = \frac{A_s \times S_{ue}}{A_n \times S_{ui}}, \text{ (Reference [6])}$$

Where, S_{ue} is the tensile strength of external thread material, and S_{ui} is the tensile strength of internal thread material.

A_s = shear area of external threads = 3.1416 n L_e $K_{n\,max}$ [1/(2n) + .57735 ($E_{s\,min}$ – $K_{n\,max}$)]

A_n = shear area of internal threads = 3.1416 n L_e $D_{s\,min}$ [1/(2n) + .57735($D_{s\,min}$ – $E_{n\,max}$)]

$E_{n\,max}$ = maximum pitch diameter of internal threads = 1.4283 in., [6], p. 1556.

Therefore,

A_s = 3.1416 (8) (1.160) (1.390) [1 / (2 x 8) + .57735 (1.4093 – 1.390)] = 2.984 in.^{2}
A_n = 3.1416 (8) (1.160) (1.4828) [1 / (2 x 8) + .57735 (1.4828 – 1.4283)] = 4.061 in.^{2}

So,

$$J = \frac{2.984(140.0)}{4.061(71.0)} = 1.449$$

Therefore, the minimum required engagement length,

$$Q = J\ L_e = 1.449 \times 1.160 = 1.680 \text{ in.}$$

The actual minimum engagement length = 2.00 in. > 1.680 in.
Thread length is acceptable.

2.10.8.3.2 Conclusions

- A lid bolt torque range of 900 to 1,000 ft. lb. is recommended to achieve the desired preload.
- Lid bolt stresses meet the acceptance criteria of NUREG/CR-6007 "Stress Analysis of Closure Bolts for Shipping Casks" [4].
- For the recommended preload, a positive (compressive) load is maintained during all load combinations.
- The bolt and flange thread engagement length is acceptable.

2.10.8.4 References

1. American Society of Mechanical Engineers, ASME Boiler and Pressure Vessel Code, Section III, Appendices 1986.

2. ASME B&PV Code, Section III, Division 1, Subsection NB, 1986.

3. American Society of Mechanical Engineers, ASME Boiler and Pressure Vessel Code, Section II, Part D, 1986.

4. Stress Analysis of Closure Bolts for Shipping Casks, NUREG/CR-6007, January 1993.

5. Apple Rubber Products Inc, "Seal Design Guide," 2000.

6. Machinery Handbook, 24th Edition, Industrial Press, 1992.

7. John H. Bickford, Sayed Nassar, "Handbook of Bolts and Bolted Joints," 1998.

8. ANSYS Computer Code and Users Manual, Release 10 A1.

Table 2.10.8-1

Summary of Results for Original and Optional Lids

	Stress Category	Stress (ksi)	Stress Limit (ksi)	Stress Ratios	Factor of Safety
Original Lid (SA – 240 Type 304 with enclosed lead)	P_m	3.34	20.0	0.167	5.99
	$P_m + P_b^*$	4.22	30.0	0.141	7.1
Optional Lid (SA – 240 Type XM19 with separate lead)	P_m	4.80	33.2	0.145	6.92
	$P_m + P_b^*$	6.67	49.8	0.134	7.5

* Maximum Stress intensity is used for $P_m + P_b$

Table 2.10.8-2
Design Parameters for Lid Bolt Analysis

D_b	bolt nominal diameter	1.5	[in]
D_{sh}	smallest diameter of bolt shank	1.32	[in]
N	number of threads per inch	8	
p	thread pitch	0.125	
D_{th}	diameter for tensile stress in thread (Db-.9743p)	1.3782	[in]
D_{ba}	diameter for tensile stress calculation	1.3200	[in]
D_{bs}	diameter for shear stress calculation	1.3200	[in]
D_{bb}	diameter for bending stress calculation	1.3200	[in]
D_{bt}	diameter for torsional stress calculation	1.3200	[in]
L_{bsh}	bolt shank length	4.88	[in]
H_b	bolt head size across flats	2.375	[in]
N_b	number of bolts	16	
K	nut factor	0.132	
Q_{max}	max required preload torque	1000	[ft-lb]
Q_{min}	min required preload torque	900	[ft-lb]
D_{lb}	lid diameter at bolt circle	45	[in]
D_{li}	lid diameter at inner edge	40.22	[in]
D_{lo}	lid diameter at outer edge	49.19	[in]
D_{ig}	inner seal diameter	40.870	[in]
D_{og}	outer seal diameter	42.620	[in]
D_{ci}	cask shell inner diameter	40	[in]
D_{lin}	lid inner diameter	39.81	[in]
tc	cask thickness	5.625	[in]
tl	lid thickness	2.5	[in]
tlf	lid flange thickness	2.38	[in]
D_h	diameter of bolt hole in lid	1.625	[in]
N_{ul}	Poisson's ratio of lid material	0.3	

Table 2.10.8-2
Design Parameters for Lid Bolt Analysis (Concluded)

W_l	weight of lid assembly	4,700	[lb]
W_c	weight of cask contents – payload	9,500	[lb]
W	W_c+W_l	14,200	[lb]
P_{lo}	external pressure	0.0	[psig]
P_{li}	internal pressure	30.0	[psig]
P_{sb}	submerge pressure	21.7	[psig]
F_{seal}	seal seat force (Reference 5)	100	[lb/in]
DLF	dynamic load factor	1.1	-
xin_i	load angle of impact load for NCT	90	[deg]
ain	worst case for impact for NCT	30.0	[g]
ain_a	ain - axial component	30.0	[g]
ain_r	ain - radial component	0.0	[g]
xi_i	load angle for impact for HAC	85	[deg]
ai	worst case for impact load for HAC	81.3	[g]
ai_a	ai - axial component	81.0	[g]
ai_r	ai - radial component	7.1	[g]
Syb	yield strength of bolt material (@200 °F)	106.3	[ksi]
Sub	ultimate tensile strength of bolt material (@200 °F)	140	[ksi]
Eb	modulus of elasticity of bolt material (@200 °F)	2.76E+07	[psi]
alfa_b	coefficient of thermal expansion of bolt material (@200 °F)	5.90E-06	[in/in-°F]
Syl	yield strength of lid material (@200 °F)	47.1	[ksi]
Sul	ultimate tensile strength of lid material (@200 °F)	99.4	[ksi]
El	modulus of elasticity of lid material (@200 °F)	2.76E+07	[psi]
alfa_l	coefficient of thermal expansion of lid material (@200 °F)	8.480E-06	[in/in-°F]
Syc	yield strength of cask material (@200 °F)	25.0	[ksi]
Suc	ultimate tensile strength of cask material (@200 °F)	71.0	[ksi]
Ec	modulus of elasticity of cask material (@200 °F)	2.76E+07	[psi]
alfa_c	coefficient of thermal expansion of cask material (@200 °F)	8.79E-06	[in/in-°F]

Table 2.10.8-3
Allowable Stresses in Closure Bolts for Normal Conditions of Transport
MATERIAL: A-564 Type 630 Condition H1100 (17Cr-4Ni-4Cu)

Temperature (°F)	Yield Stress (ksi)	Coefficients of Thermal Expansion (in/in-°F)	NCT Allowables		
			F_{tb} (ksi)	F_{vb} (ksi)	*S.I.* (ksi)
100	115	5.89E-06	76.67	46.0	103.5
200	106.3	5.90E-06	70.87	42.5	95.7
300	101.8	5.90E-06	67.87	40.7	91.6
400	98.3	5.91E-06	65.53	39.3	88.5
500	95.2	5.91E-06	63.47	38.1	85.7

Notes:
Yield stress values are from ASME Code
Allowable Tensile stress, $F_{tb} = 2/3\ S_y$ (Ref. [4], Table 6.1)
Allowable shear stress, $F_{vb} = 0.4\ S_y$ (Ref. [4], Table 6.1)

Tension and shear stresses must be combined using the following interaction equation:

$$\frac{\sigma_{tb}^2}{F_{tb}^2} + \frac{\tau_{vb}^2}{F_{vb}^2} \leq 1.0 \quad \text{(Ref. [4])}$$

Stress intensity from combined tensile, shear and residual torsion loads,

$$S.I. \leq 0.9\ S_y \qquad \text{(Ref. [4], Table 6.1)}$$

Table 2.10.8-4
Allowable Stresses in Closure Bolts for Hypothetical Accident Conditions
MATERIAL: SA-564 Type 630 Condition H1100 (17Cr-4Ni-4Cu)

Temperature (°F)	Yield Stress (ksi)	Ultimate Stress (ksi)	HAC Allowables	
			F_{tb} (ksi)	F_{vb} (ksi)
100	115	140	98.0	58.8
200	106.3	140	98.0	58.8
300	101.8	140	98.0	58.8
400	98.3	136.1	95.3	57.2
500	95.2	133.4	93.4	56.0

Notes:
Yield and tensile stress values are from ASME Code,
Allowable Tensile stress, F_{tb} = MINIMUM(0.7 S_u, S_y) (Ref. [4], Table 6.3)
Allowable shear stress, F_{vb} = MINIMUM(0.42 S_u, 0.6 S_y) (Ref. [4], Table 6.3)
Tension and shear stresses must be combined using the following interaction equation:

$$\frac{\sigma_{tb}^2}{F_{tb}^2} + \frac{\tau_{vb}^2}{F_{vb}^2} \leq 1.0 \qquad \text{(Ref. [4])}$$

Table 2.10.8-5
Summary of Bolt Individual Loads

Load Type	Force ID	NCT	HAC	Force Parameter Description
Maximum Preload	Fa(L)	60,606	60,606	Non-prying Tensile Force, [lb]
	Mtr(L)	6,000	6,000	Residual Torsional Moment [lb]
Minimum Preload	Fa(L)	54,545	54,545	Non-prying Tensile Force, [lb]
	Mtr(L)	5,400	5,400	Residual Torsional Moment [lb]
Gasket	Fa(G)	1,639	1,639	Non-prying tensile force, [lb]
Pressure	Fa(P)	2,675	2,675	Non-prying Tensile Force, [lb]
	Fs(P)	0	0	Shear Force [lb]
	Ff(P)	338	338	Fixed Edge Force [lb/in]
	Mf(P)	1,898	1,898	Fixed Edge Moment [lb-in/in]
Temperature	Fa(T)	14190	14190	Non-prying Tensile Force, [lb]
	Fs(T)	0	0	Shear Force [lb]
Impact	Fa(I)	39,246	105,952	Non-prying Tensile Force, [lb]
	Fs(I)	0	0	Shear Force [lb]
	Ff(I)	4,443	11,995	Fixed Edge Force [lb/in]
	Mf(I)	24,984	67,449	Fixed Edge Moment [lb-in/in]
Outside Pressure (Submersion)	Fa(S)	0	-1,935	Non-prying Tensile Force, [lb]
	Fs(S)	0	0	Shear Force [lb]
	Ff(S)	0	-244	Fixed Edge Force [lb/in]
	Mf(S)	0	-1,373	Fixed Edge Moment [lb-in/in]
Vibration	Fa(V)	0	0	Non-prying Tensile Force, [lb]

Table 2.10.8-6
Normal and Hypothetical Accident Conditions Load Combinations

Load Combination[2]	Identification Per Table 4.9 of NUREG/CR 6007										
	Fa_pt	Fa_al	Fa_c	Ff_c	Mf_c	B	Fap_c	Fa	Fs	Mbb	Mtr
	[kip]	[kip]	[kip]	[kip/in]	[in-kip/in]	[kip/in]	[kip]	[kip]	[kip]	[in-kip]	[in-kip]
N1. NCT Operating (L)+(G)+(P)+(T) +(V)											
	76.4	2.7	76.4	0.3	1.9	8.65	0.0	76.4	0.0	0.5	6.0
N 2. NCT Impact (L)+(G)+(P)+(T)+(V) +(I)											
	76.4	41.9	76.4	4.8	26.9	8.65	0.0	76.4	0.0	7.4	6.0
H1. HAC Pressure (L)+(G)+(P)+(T)											
	76.4	2.7	76.4	0.3	1.9	8.65	0.0	76.4	0.0	NA[1]	NA[1]
H2. HAC Impact (L)+(G)+(P)+(T)+(I)											
	76.4	108.6	108.6	12.3	69.3	12.33	0.0	108.6	0.0	NA[1]	NA[1]
H3. HAC Submersion (L)+(G)+(P)+(T)+(S)											
	76.4	-1.9	76.4	0.0	-1.4	8.65	0.0	76.4	0.0	NA[1]	NA[1]

Notes:
[1] Bending stress and torsional stress are not required to be analyzed for accident load per Reference [4].
[2] L- Lid bolt preload, G- Gasket seating load, P- Pressure load, T- Temperature load, V-Vibration load, I- Impact load, S- Submersion load

Table 2.10.8-7
Closure Bolt Stress Analysis Results

Load Combination[2]	Tensile Stress Sba [ksi]	Shear Stress Sbs [ksi]	Bending Stress Sbb [ksi]	Torsional Stress Sbt [ksi]	Stress Intensity Sbi [ksi]
N1. NCT Operating (L)+(G)+(P)+(T)+(V)	55.9	0.0	2.3	13.3	63.9
N 2. NCT Impact (L)+(G)+(P)+(T)+(V)+(I)	55.9	0.0	32.6	13.3	92.4
H1. HAC Pressure (L)+(G)+(P)+(T)	55.9	0.0	NA[1]	NA[1]	NA[1]
H2. HAC Impact (L)+(G)+(P)+(T)+(I)	79.4	0.0	NA[1]	NA[1]	NA[1]
H3. HAC Submersion (L)+(G)+(P)+(T)+(S)	55.9	0.0	NA[1]	NA[1]	NA[1]

Notes:
[1] Bending stress and torsional stress are not required to be analyzed for accident load per Reference [4].
[2] L- Lid bolt preload, G- Gasket seating load, P- Pressure load, T- Temperature load, V-Vibration load, I- Impact load, S- Submersion load.

Table 2.10.8-8
Summary of Stress Ratios[(1)(2)(3)]

Load Combination	Applied Tensile Stress	Allowable Tensile Stress	Tensile Stress Ratio	Applied Shear Stress	Allowable Shear Stress	Shear Stress Ratio	Combined Stress Ratio	Applied Stress Intensity	Allowable Stress Intensity	Stress Intensity Ratio
	Sba [ksi]	Ftb [ksi]	Rt	Sbs [ksi]	Fvb [ksi]	Rs	R	Sbi [ksi]	SI [ksi]	Ri
N1. NCT Operating (L)+(G)+(P)+(T)+(V)	55.9	70.9	78.8%	0.0	42.5	0.0%	78.8%	63.9	95.7	66.8%
N 2. NCT Impact (L)+(G)+(P)+(T)+(V)+(I)	55.9	70.9	78.8%	0.0	42.5	0.0%	78.8%	92.4	95.7	96.6%
H1. HAC Pressure (L)+(G)+(P)+(T)	55.9	98.0	57.0%	0.0	58.8	0.0%	57.0%	NA	NA	NA
H2. HAC Impact (L)+(G)+(P)+(T)+(I)	79.4	98.0	81.0%	0.0	58.8	0.0%	81.0%	NA	NA	NA
H3. HAC Submersion (L)+(G)+(P)+(T)+(S)	55.9	92.0	60.7%	0.0	55.2	0.0%	60.7%	NA	NA	NA

Note:
(1) In the table Rt=Sba/Ftb, Rs=Sbs/Fvb, and Ri=Sbi/SI
(2) L- Lid bolt preload, G- Gasket seating load, P- Pressure load, T- Temperature load, V-Vibration load, I- Impact load, S- Submersion load
(3) Bending stress and torsional stress are not required to be analyzed for accident load per Reference [4].

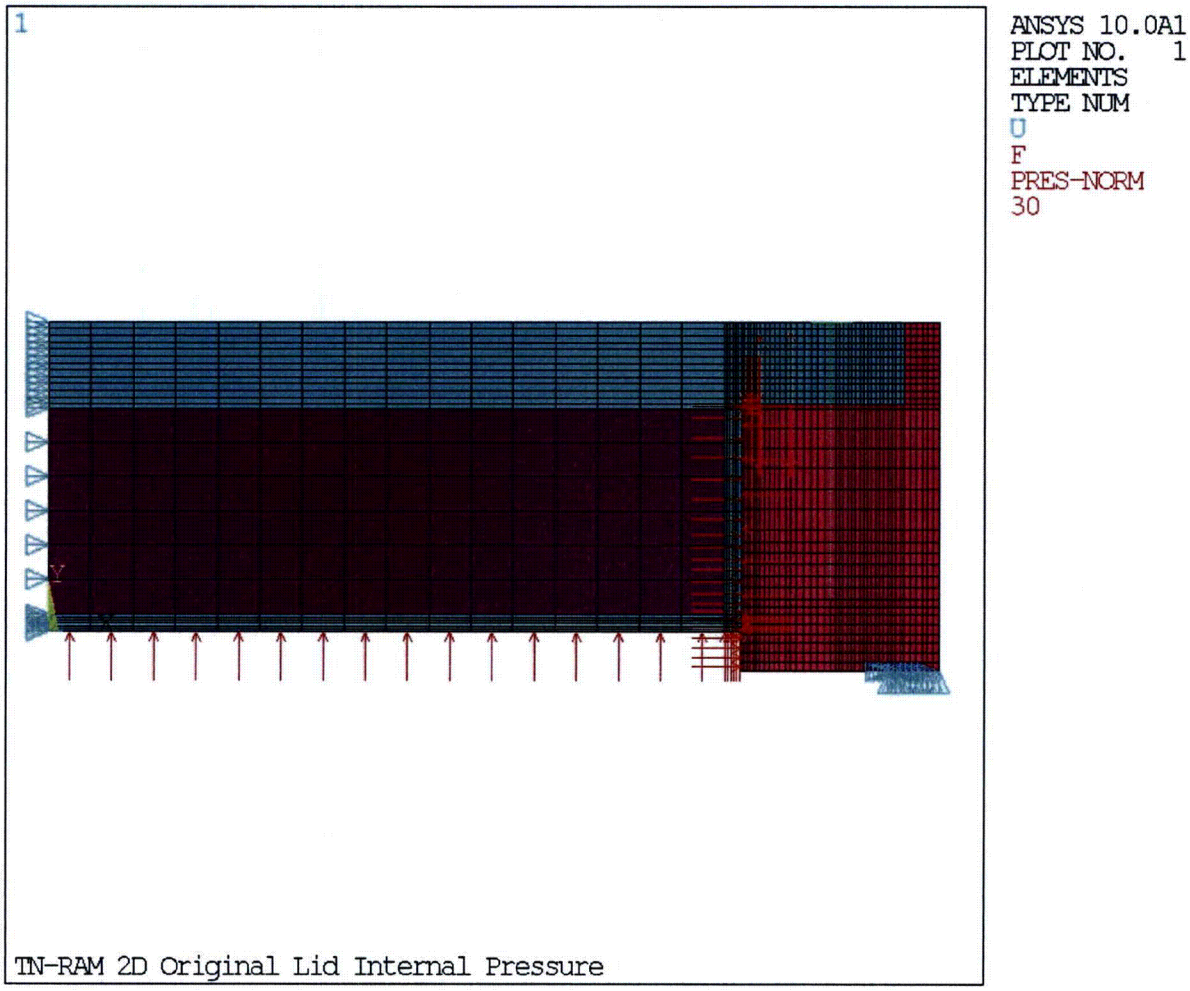

Figure 2.10.8-1
Finite Element Model Original Lid with Applied Loads and Boundary Condition

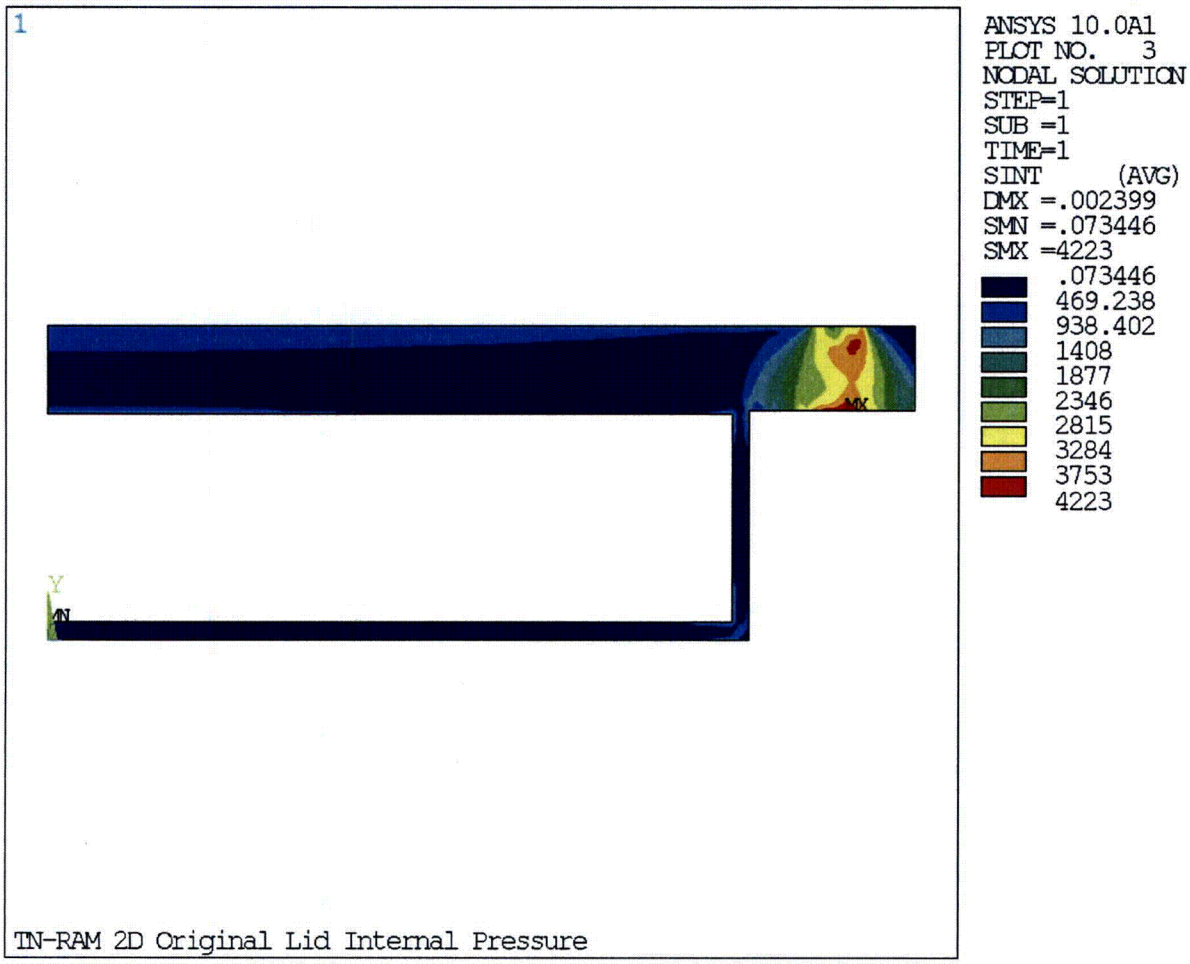

Figure 2.10.8-2
Stress Intensity Plots for Original Lid

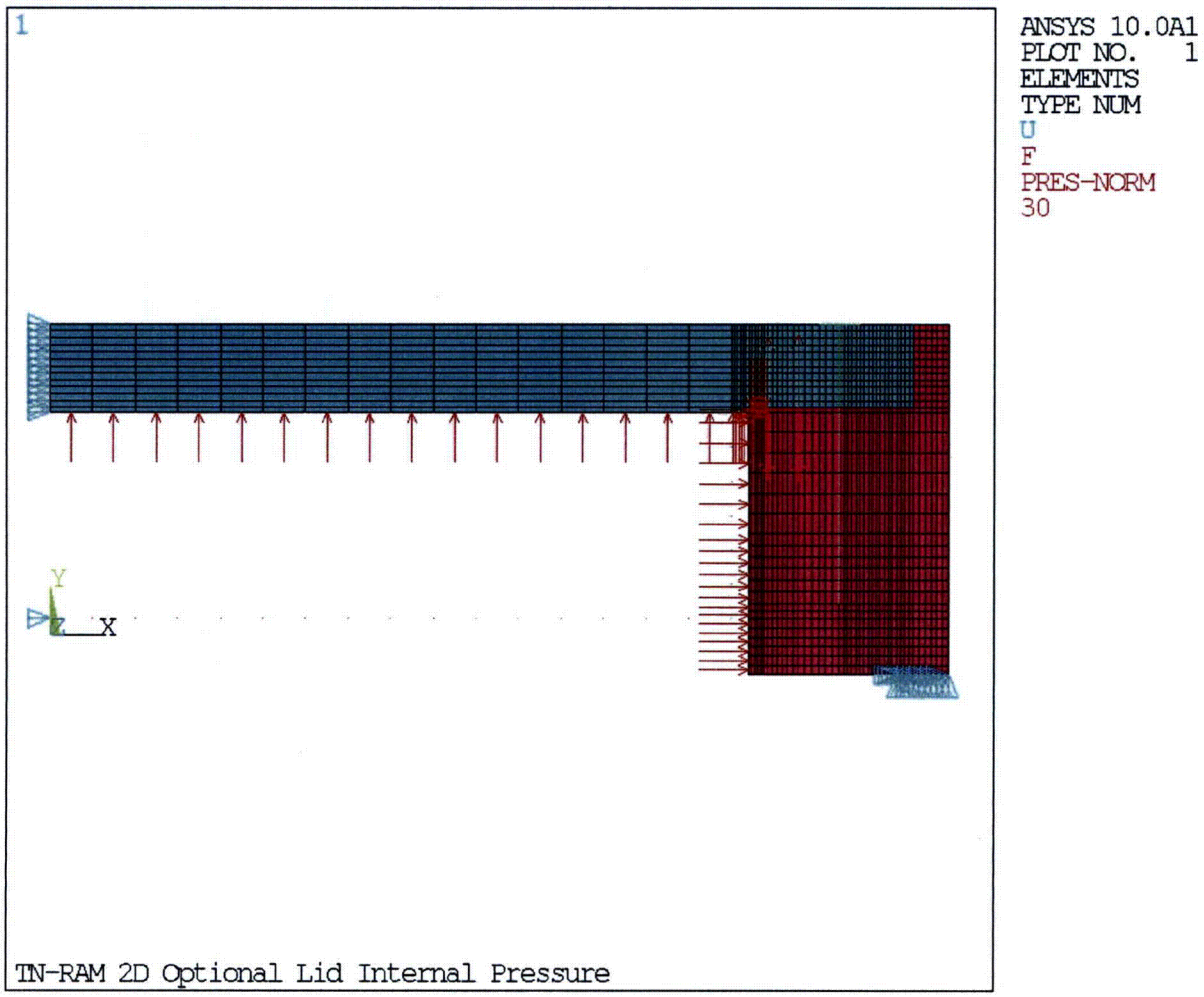

Figure 2.10.8-3
Finite Element Model Optional Lid with Applied Loads and Boundary Condition

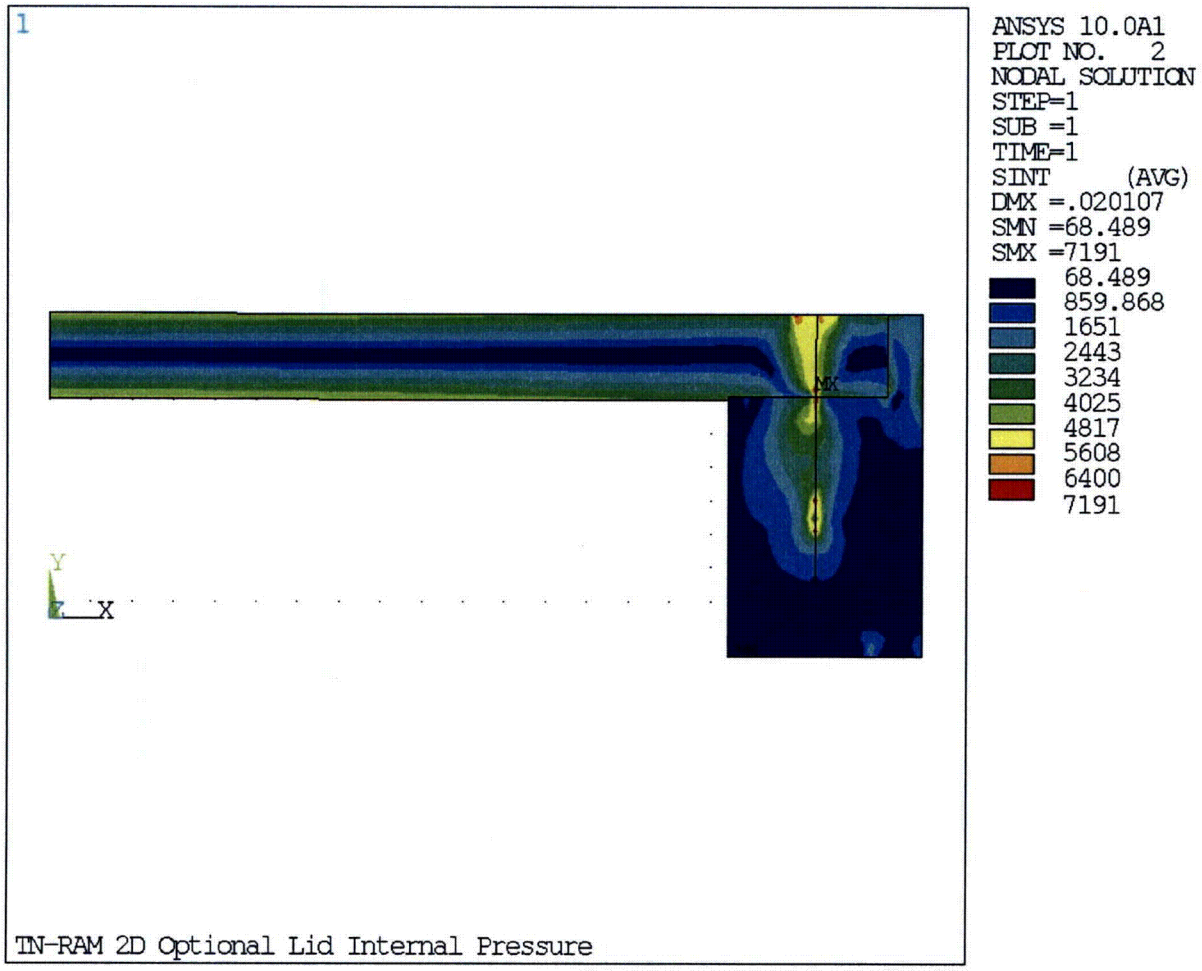

Figure 2.10.8-4
Stress Intensity Plots for Optional Lid

CHAPTER THREE
THERMAL EVALUATION

LIST OF TABLES

PAGE

Table 3-1 Summary of Results 3-4

Table 3-2 Material Thermal Properties 3-6

Table 3-3 Convection and Radiant Heat Transfer Coefficients for Normal Conditions of Transport 3-13

Table 3-4 Thermal Analysis Results for Normal Conditions of Transport 3-14

Table 3-5 Total Convection and Radiation Heat Transfer Coefficient Before and After the Thermal Accident for Horizontal Cylindrical Surfaces 3-20

Table 3-5a Total Convection and Radiation Heat Transfer Coefficient Before and After the Thermal Accident for Impact Limiter Vertical Outer Surface 3-20A

Table 3-5b Total Convection And Radiation Heat Transfer Coefficient Before And After The Thermal Accident For Impact Limiter Vertical Inner Surface 3-20B

Table 3-6 Total Convection and Radiation Heat Transfer Coefficient During the Thermal Accident 3-22

Table 3-7 Thermal Analysis Results for Accident Conditions 3-24

CHAPTER THREE

THERMAL EVALUATION

LIST OF FIGURES

PAGE

Figure 3-1 Thermal Model for TN-RAM Cask....3-9

Figure 3-2 ANSYS Finite Element Model for TN-RAM Cask....3-10

Figure 3-3 Maximum Temperature Distribution Normal Conditions of Transport....3-15

Figure 3-4 TN-RAM Finite Element Model Mesh for Hypothetical Accident Analysis ...3-22A

Figure 3-5 Typical TN-RAM Model Boundary Conditions (Post Fire Case Shown) 3-22A

Figure 3-6 Temperature Distribution at the End of Thermal Accident (Time = 0.5 hr.) 3-25

Figure 3-7 Maximum Temperature Distribution, Lead Regions of Packaging....3-27

Figure 3-8 History Of The Maximum Component Temperature During Fire And Post Fire Periods....3-28

mechanical properties used in the structural analyses. Temperatures are also calculated to demonstrate that specified limits for seal materials are not exceeded.

The design of the steel encased wooden impact limiters is described in Chapter One. There are no temperature limits specified for the impact limiters, however, these components are considered in the thermal analysis because of their contribution as a thermal insulator. Since the impact limiters cover the lid and bottom regions of the cask, it is assumed that all decay heat is rejected radially out of the package. Similarly, the impact limiters protect the lid and bottom regions from the external heat load applied during the hypothetical thermal accident event.

Several thermal design criteria have been established for the TN-RAM.

- Containment of radioactive material is a major design requirement for the TN-RAM. Therefore, seal temperatures must be maintained within specified limits to satisfy the required containment criteria (Chapter Four) under normal and accident conditions. A maximum equilibrium seal temperature of 437°F is set for the silicone O-rings under normal and accident conditions. This limit applies to all containment boundary seals used in the cask closure lid and containment penetrations.

- In accordance with 10CFR71.43(g) (Ref. 3-1) the maximum temperature of accessible package surfaces in the shade is limited to 185°F for exclusive use shipments.

For the thermal accident condition the results of the analysis are seen in Figure 3-8. The accident condition analysis was carried out with ANSYS model which used lead and steel thickness consistent with the design. The results show that the maximum lead temperatures occur at the end of the fire, whereas the maximum seal temperatures occur during post-fire.

The TN RAM has two options for the cask lid design. One design option has a lead shield disc integral with the steel lid and the second design option has a lead shield disc separate from the steel lid as shown in Drawing 990-710.

The thermal analysis results are not sensitive to the design differences between the two lid design options because the amount of heat rejected in axial direction is negligible due to the presence of impact limiters which act like insulators.

Table 3-1
Summary of Results

Normal Conditions of Transport	
Maximum Temperatures	
Outer Surface (thermal shield)	161°F
Outer Shell (flange region)	164°F
Lead	163°F
Inner Shell/Cavity Wall	163°F
Lid	166°F
Lid Seals	164°F
* Average Cavity Gas Temperature	213°F
Maximum Outer Surface Temperature Without Insolation	103°F
Accident Conditions	
Maximum Transient Temperatures	
Outer Surface (thermal shield)	1170°F
Outer Shell	784°F
Lead (behind trunnions)	571°F
Inner Shell/Cavity Wall	396°F
* Cavity "Cold Wall" (Peak)	173°F
Lid Seals	249°F
** Average Cavity Gas Temperature (Peak)	446°F

* Peak value of the minimum (coldest) temperature on the cavity wall during accident
** Cavity wall temperature +50° F

Table 3-2
Material Thermal Properties[3-2]

	Stainless Steel	Lead	Air
Used in	body, lid thermal shield	body, lid	thermal shield
Density (lbm/ft^3)	488	705	
Specific heat (Btu/lbm-°F)	0.11	0.03	
Thermal Conductivity (Btu/hr-ft-°F)	8.0 @ 32°F 9.4 @ 212°F 10.9 @ 572°F 12.4 @ 932°F	20.1 @ 32°F 19.0 @ 212°F 18.0 @ 572°F	0.0154 @ 100°F 0.0212 @ 400°F 0.0286 @ 800°F 0.0400 @ 1500°F
Emissivity			
Weathered	0.85		
Oxidized	0.80		

Wood Properties (3-8)

Thermal Conductivity of Wood

k [Btu/hr-in-°F]	
Min.	Max.
0.0019	0.0135

Wood conductivity parallel to the grain is 1.5 to 2.8 times greater than the conductivity across the grain [3-8]. Therefore, during a fire accident the maximum wood thermal conductivity is taken to be 2.8 times that of the bounding maximum conductivity across the grain to maximize heat input from fire to the cask. The maximum thermal conductivity during fire transient is:

K= (2.8)*(0.0135 Btu/hr-in-°F) = 0.0378 Btu/hr-in-°F

During the transient analyses the thermal mass of wood is conservatively neglected. These material properties for wood are also the same as those used in NUHOMS®- MP197 transport packaging [3-10].

Partial air pressure at 213°F

$P_a = 14.7 \times (213 + 460)/(70 + 460)$

$= 18.7$ psia

Total cavity pressure

$= P_w + P_a$

$= 5.1 + 18.7$

$= 23.8$ psia

NOTE: The maximum normal operating pressure is conservatively assumed to be 30 psig.

3.4.5 Maximum Thermal Stresses

The maximum thermal stresses during normal conditions of transport are calculated in Section 2.6 of Chapter 2.

3.4.6 Evaluation of Package Performance

The thermal analysis for normal conditions concludes that the TN-RAM design meets all applicable requirements. The maximum temperatures calculated using conservative assumptions are relatively low. The maximum temperature of any containment structural component is 164°F which has an insignificant effect on the mechanical properties of the containment materials used. The maximum lead temperature (163°F) is well below allowable values. The seal temperature during normal transport conditions is well below the 437°F long term limit specified for continued seal function. The maximum accessible surface temperature of 103°F is below the specified 185°F limit.

3.5 THERMAL EVALUATION FOR HYPOTHETICAL ACCIDENT CONDITIONS

3.5.1 Thermal Analysis Model

The analysis assumptions and model consider the packaging condition following the hypothetical accident sequence of 10CFR71.73. The hypothetical accident model is developed using ANSYS computer code [3-6] to obtain the maximum component temperatures under accident conditions. It is similar to the model described in Section 3.4.1.1 with impact limiters added in the current model and dimensions of lead and steel regions are consistent with the design. The finite element model of the cask is shown in Figure 3-4.

To permit radiation heat transfer across the air gap in the thermal shield, the ANSYS radiation superelement, Matrix50 is used. Radiation along this gap is modeled using the AUX12 processor with SHELL57 elements used to compute the form factors. Heat transfer across this 0.125" air gap in the thermal shield is modeled as a combination of radiation and gaseous conduction. This gap is retained during fire due to the presence of thermal wire. Surface emissivities of 0.8 (typical for oxidized steel surfaces [3-2]) are used for the stainless steel surfaces within the air gap.

The three dimensional model represents the top half of the packaging which has four trunnions exposed to the thermal environment. The conduction path provided by these trunnions will make the top half of the packaging hotter than the lower half which has two trunnions. It would be conservative to use the temperature distribution in the upper half for the lower half of the packaging.

Impact Limiters are included in the ANSYS model. Analysis in Chapter Two and

testing on similar designs confirm that free drop and puncture damage do not measurably alter the thermal performance of the packaging. The steel encased wood impact limiters are locally deformed from the 30 foot drop, but they remain firmly attached to the cask. The impact limiters in their partially crushed condition still serve as effective thermal insulation. Under exposure to the thermal accident environment the wood at the periphery of the impact limiter shell would char but not burn.

Heat dissipation from the outer surface is by radiation and natural convection to an ambient at 100°F before and after thermal accident. However, Solar Insolation is added to the model after the 30 minute fire. Total heat transfer coefficient H_t is defined as:

$$H_t = h_r + h_c$$

where,

h_r = radiation heat transfer coefficient,
h_c = free convection heat transfer coefficient.

Air properties used only in computing the total heat transfer coefficients are calculated based on the correlations listed in the following Table.

Thermal Properties of Air [3-9]

Specific Heat (kJ/kg-K)	**Dynamic Viscosity (N-s/m^2)**	**Conductivity (W/m-K)**
$c_P = \sum\left[A(N)T^N\right]$	$\mu = \sum\left[B(N)T^N\right]$	$k = \sum\left[C(N)T^N\right]$
A(0)= 0.103409E+1	For 250≤ T < 600 K	C(0)= -2.276501E-3
A(1)= -0.2848870E-3	B(0)= -9.8601E-1	C(1)= 1.2598485E-4
A(2)= 0.7816818E-6	B(1)= 9.080125E-2	C(2)= -1.4815235E-7
A(3)= -0.4970786E-9	B(2)= -1.17635575E-4	C(3)= 1.73550646E-10
A(4)= 0.1077024E-12	B(3)= 1.2349703E-7	C(4)= -1.066657E-13
	B(4)= -5.7971299E-11	C(5)= 2.47663035E-17
	For 600≤ T < 1050 K	
	B(0)= 4.8856745	
	B(1)= 5.43232E-2	
	B(2)= -2.4261775E-5	
	B(3)= 7.9306E-9	
	B(4)= -1.10398E-12	

The radiation heat transfer coefficient, h_r, is given by the equation:

$$h_r = \varepsilon\, F_{12}\left[\frac{\sigma(T_1^4 - T_2^4)}{T_1 - T_2}\right] Btu/hr\text{-}ft^2\text{-}^oF$$

where,

ε	= surface emissivity,
F_{12}	= view factor from surface to ambient,
σ	= 0.1714×10^{-8} Btu/hr-ft^2-^{o}R^4,
T_1	= surface temperature, ^{o}R,
T_2	= ambient temperature, ^{o}R.

The following equations from reference [3-9] are used to calculate the free convection coefficients.

<u>For horizontal cylinders:</u>

$$h_c = \frac{Nu\ k}{D}$$ with

D = diameter of the horizontal cylinder,
k = air conductivity.

$Nu^T = 0.772\ \overline{C}_l\ Ra^{1/4}$ $\qquad \overline{C}_l = 0.515$ for gases [3-9].

$$Nu_l = \frac{2f}{\ln(1 + 2f / Nu^T)}$$ Nusselt number for fully laminar heat transfer with

$$f = 1 - \frac{0.13}{(Nu^T)^{0.16}}$$

$Nu_t = \overline{C}_t\ Ra^{1/3}$ Nusselt number for fully turbulent heat transfer

$$\overline{C}_t = 0.14\left(\frac{1 + 0.0107\ \mathrm{Pr}}{1 + 0.01\ \mathrm{Pr}}\right)$$ for horizontal cylinders [3-9].

$$Nu = \left[(Nu_l)^m + (Nu_t)^m\right]^{1/m} \quad with \quad m = 10 \quad for \quad 10^{-10} < Ra < 10^7,$$

$$Ra = Gr\ \mathrm{Pr} \quad ; \quad Gr = \frac{g\beta(T_w - T_\infty)D^3}{\nu^2}$$

<u>For vertical flat plates:</u>

$$h_c = \frac{Nu\ k}{L}$$ with

L = height of the vertical plate,
k = air conductivity.

$Nu^T = \overline{C}_l\ Ra^{1/4}$ $\qquad \overline{C}_l = 0.515$ for gases [3-9].

$$Nu_l = \frac{2.0}{\ln(1 + 2.0 / Nu^T)}$$ Nusselt number for fully laminar heat transfer.

$Nu_t = C_t^V\ Ra^{1/3}$ Nusselt number for fully turbulent heat transfer with

$$C_t^{V} = \frac{0.13\,\mathrm{Pr}^{0.22}}{(1+0.61\,\mathrm{Pr}^{0.81})^{0.42}}$$

$$Nu = \left[(Nu_l)^m + (Nu_t)^m\right]^{1/m} \qquad with \quad m = 6 \quad for \;\; 0.1 < Ra < 10^{12},$$

$$Ra = Gr\,\mathrm{Pr} \quad ; \quad Gr = \frac{g\,\beta\,(T_w - T_\infty)\,L^3}{\nu^2}$$

Tables 3-5, 3-5a, and 3-5b give the values of H_t as a function of surface temperature, T_s, for an ambient temperature of 100°F.

Initial conditions before the thermal accident are established by performing a steady state analysis with a packaging heat load of 300 watts and an ambient temperature of 100° F and no solar insolation.

During the thermal accident, heat absorption at the outer surface by radiation and convection is considered. A bounding convection coefficient of 4.5 Btu/hr-ft^2-°F is considered during burning period based on data from (3-7). The convection and radiation from fire to the packaging outer surface are combined together in the form of total heat transfer coefficient. The correlations to calculate the total heat transfer coefficients during fire are defined as:

$$H_{t-fire} = h_{r-fire} + h_{c-fire}$$

where,

$h_{r\text{-fire}}$ = radiation heat transfer coefficient during fire, and

$h_{c\text{-fire}}$ = bounding convection heat transfer coefficient during fire.

The radiation heat transfer coefficient, $h_{r\text{-fire}}$, during fire is given by the equation:

$$h_{r-fire} = F_o\left[\frac{\sigma(\varepsilon_{fire}\,T_1^4 - T_2^4)}{T_1 - T_2}\right] Btu/hr\text{-}ft^2\text{-}^oF$$

where,

ε_{fire} = emissivity of fire,

F_o = outer packaging surface absorptivity,

σ = 0.1714×10^{-8} Btu/hr-ft^2-°R^4,

T_1 = fire temperature, °R, and

T_2 = surface temperature, °R.

Table 3-5
Total Convection and Radiation Heat Transfer Coefficient Before and After the Thermal Accident for Horizontal Cylindrical Surfaces

T_S [°F]	H_t [Btu/hr-ft^2-F]
115	1.64
135	1.89
155	2.08
175	2.24
195	2.38
215	2.52
235	2.66
255	2.79
275	2.92
295	3.05
315	3.18
335	3.31
355	3.44
375	3.57
395	3.71
415	3.85
435	3.98
455	4.13
475	4.27
495	4.42
515	4.57
535	4.72
555	4.88
575	5.04
595	5.20
615	5.37
635	5.54
655	5.71
675	5.89
695	6.08
715	6.26
735	6.45
755	6.65
775	6.85
795	7.06
815	7.27
835	7.48
855	7.70
875	7.92
895	8.15
915	8.39
935	8.63
955	8.87
975	9.12
995	9.38

Table 3-5a
Total Convection and Radiation Heat Transfer Coefficient Before and After the Thermal Accident for Impact Limiter Vertical Outer Surface

T_S [°F]	H_t [Btu/hr-ft^2-F]
115	1.46
135	1.66
155	1.81
175	1.94
195	2.06
215	2.17
235	2.28
255	2.39
275	2.50
295	2.60
315	2.71
335	2.82
355	2.93
375	3.05
395	3.16
415	3.28
435	3.40
455	3.52
475	3.65
495	3.78
515	3.91
535	4.05
555	4.19
575	4.33
595	4.48
615	4.63
635	4.78
655	4.94
675	5.11
695	5.27
715	5.45
735	5.62
755	5.80
775	5.99
795	6.18
815	6.37
835	6.57
855	6.78
875	6.99
895	7.21
915	7.43
935	7.65
955	7.88
975	8.12
995	8.36

Table 3-5b
Total Convection And Radiation Heat Transfer Coefficient Before And After The Thermal Accident For Impact Limiter Vertical Inner Surface

T_S [°F]	H_t [Btu/hr-ft^2-F]
115	1.54
135	1.70
155	1.83
175	1.94
195	2.04
215	2.14
235	2.24
255	2.34
275	2.44
295	2.54
315	2.65
335	2.75
355	2.86
375	2.96
395	3.08
415	3.19
435	3.31
455	3.43
475	3.55
495	3.68
515	3.81
535	3.94
555	4.08
575	4.22
595	4.36
615	4.51
635	4.67
655	4.82
675	4.99
695	5.15
715	5.32
735	5.50
755	5.68
775	5.86
795	6.05
815	6.25
835	6.45
855	6.65
875	6.86
895	7.07
915	7.29
935	7.52
955	7.75
975	7.99
995	8.23

Table 3-6 gives the value of H_t as a function of T_s. H_t is used as a boundary input during the 30 minute duration of the thermal radiation environment.

It is assumed that the surface of the packaging is covered with soot during the post-fire conditions. To bound the problem, the thermal analysis uses a solar absorptivity of 1.0 for the packaging surfaces during the post-fire cool-down period.

Solar radiation is considered as a constant heat flux applied on the SURF152 elements overlaid on the outer surface of the transfer cask. The amount of the solar heat flux over a 12-hour solar day defined in (3-1) is averaged over a 24 hour period to calculate the solar heat flux. The average solar heat flux is considered as the maximum amount of solar radiation that is available for absorption on any surface. This value is multiplied by the absorptivity of the packaging outer surfaces to calculate the amount of solar heat flux that each surface absorbs. Figure 3-5 illustrates the boundary conditions applied for the post-fire case. The solar heat flux values applied in the model for post-fire conditions are as follows:

Surface shape	**Insolance (gcal/cm^2)** (3-1)	**Total solar heat flux average over 24 hours (Btu/hr-in^2)**	**Post-Fire absorptivity**	**Solar heat flux in the model (Btu/hr-in^2)**
Curved	400	0.427	1.0	0.427
Flat, Vertical	200	0.213	1.0	0.213

Table 3-6
Total Convection and Radiation Heat Transfer Coefficient During the Thermal Accident

T_s [°F]	T_{fire} [°F]	h_c (3-7) [Btu/hr-ft^2-°F]	h_r [Btu/hr-in^2-°F]	H_t [Btu/hr-in^2-°F]
226	1475	4.5	0.095	0.126
251	1475	4.5	0.096	0.127
276	1475	4.5	0.098	0.129
301	1475	4.5	0.100	0.131
326	1475	4.5	0.101	0.133
351	1475	4.5	0.103	0.134
376	1475	4.5	0.105	0.136
401	1475	4.5	0.107	0.138
426	1475	4.5	0.109	0.140
451	1475	4.5	0.111	0.142
476	1475	4.5	0.113	0.144
501	1475	4.5	0.115	0.146
526	1475	4.5	0.117	0.148
551	1475	4.5	0.119	0.151
576	1475	4.5	0.121	0.153
601	1475	4.5	0.124	0.155
626	1475	4.5	0.126	0.157
651	1475	4.5	0.128	0.159
676	1475	4.5	0.131	0.162
701	1475	4.5	0.133	0.164
726	1475	4.5	0.135	0.167
751	1475	4.5	0.138	0.169
776	1475	4.5	0.140	0.171
801	1475	4.5	0.143	0.174
826	1475	4.5	0.145	0.176
851	1475	4.5	0.147	0.179
876	1475	4.5	0.150	0.181
901	1475	4.5	0.152	0.184
1001	1475	4.5	0.162	0.193
1101	1475	4.5	0.170	0.201
1201	1475	4.5	0.174	0.205
1301	1475	4.5	0.164	0.195
1401	1475	4.5	0.080	0.111

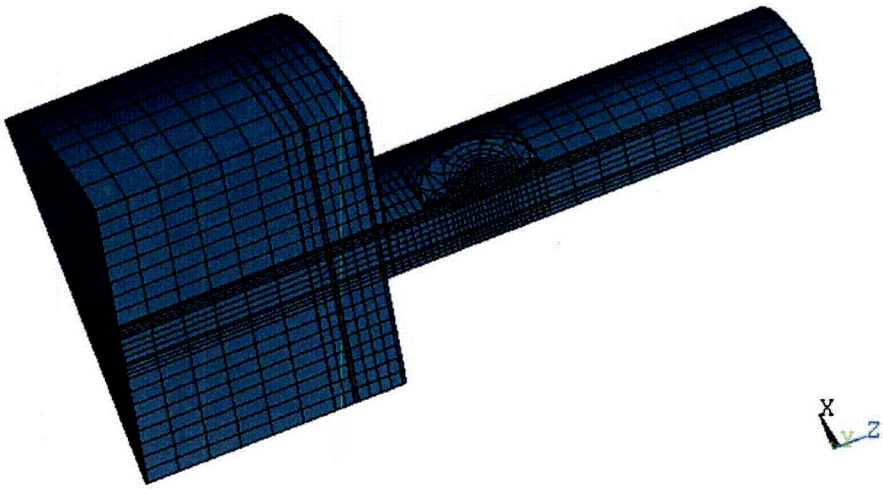

Figure 3-4
TN-RAM Finite Element Model Mesh for Hypothetical Accident Analysis

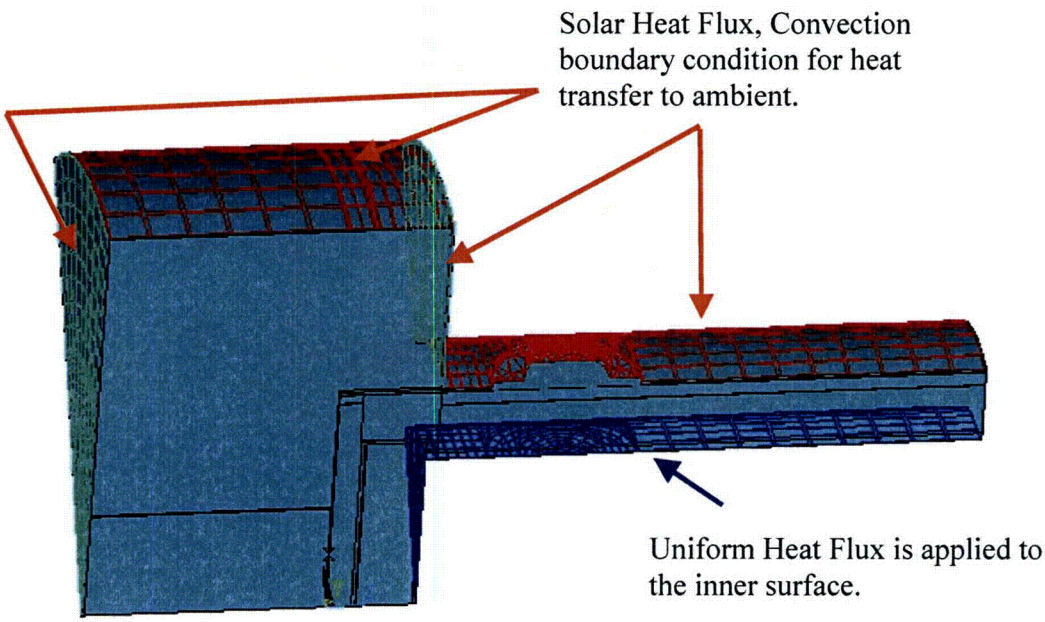

Figure 3-5
Typical TN-RAM Model Boundary Conditions (Post Fire Case Shown)

The total heat transfer coefficients, H_t, used for the range of package temperatures representative of post-thermal event conditions are shown on Tables 3-5, 3-5a, and 3-5b.

3.5.2 Packaging Conditions and Environment

The condition of the TN-RAM following the fee drop and puncture drop accidents is discussed in Section 2.7.1.5 and 2.7.2, respectively.

The packaging is assumed to be initially at steady state in an ambient temperature of 100°F with 300 watts of payload decay heat. The effects of solar radiation are neglected prior to, and during the accident. They are considered during the post-fire conditions. During the accident the packaging is exposed to a radiation environment of 1475°F for 30 minutes. The radiation environment is characterized by an emissivity of 0.9 and the outer surface of the packaging is assumed to have an absorptivity of 0.8. A bounding convection coefficient of 4.5 Btu/hr-ft^2-°F is considered during the 30 minute fire accident based on data from Reference (3-7). Cooldown of the packaging after 30 minutes of exposure to the accident environment is based on 100°F ambient air temperature, insolation and a surface emissivity of 0.85.

To bound the heat conductance uncertainty between adjacent components, the following gaps at thermal equilibrium are assumed:

0.03" gap between the lead in the cask and the outer shell.

0.1" gap between the lead in the shield disc and the shield disc liner.

0.03" gap between the cask flange and the impact limiter shim.

0.03" gap between the cask lid and the impact limiter liner.

These gaps are conservatively replaced with adjacent solid materials during the 30 minute fire transient to maximize the heat input from the fire into the cask. For the post-fire conditions the gaps are assumed to be the same as those during Pre-Fire initial conditions.

3.5.3 Package Temperatures

The maximum transient temperatures of the packaging components based on analyses performed using the thermal model are presented in Table 3-7. The peak temperatures occur in small regions directly beneath the trunnions for Lead and Outer Shell regions. The temperature distribution at the end of the 30 minute fire accident is shown in Figure 3-6. Each color band shows the range of temperatures for the particular region. Each color in the legend is

Table 3-7

Thermal Analysis Results for Accident Conditions

Packaging Components Maximum Transient Temperatures

	Temperature	Time*
Outer surface (thermal shield)	1170°F	0.5 hr.
Outer Shell	784°F	0.5 hr.
Lead Shell	571°F	0.5 hr.
Inner Shell/Cavity Wall	396°F	0.7 hr.
Seals	249°F	5.2 hr.
Cavity Cold Wall (Peak)	173°F	-
**Average cavity gas (peak)	446°F	-

* Time from start of thermal accident event
** Cavity wall temperature +50°F

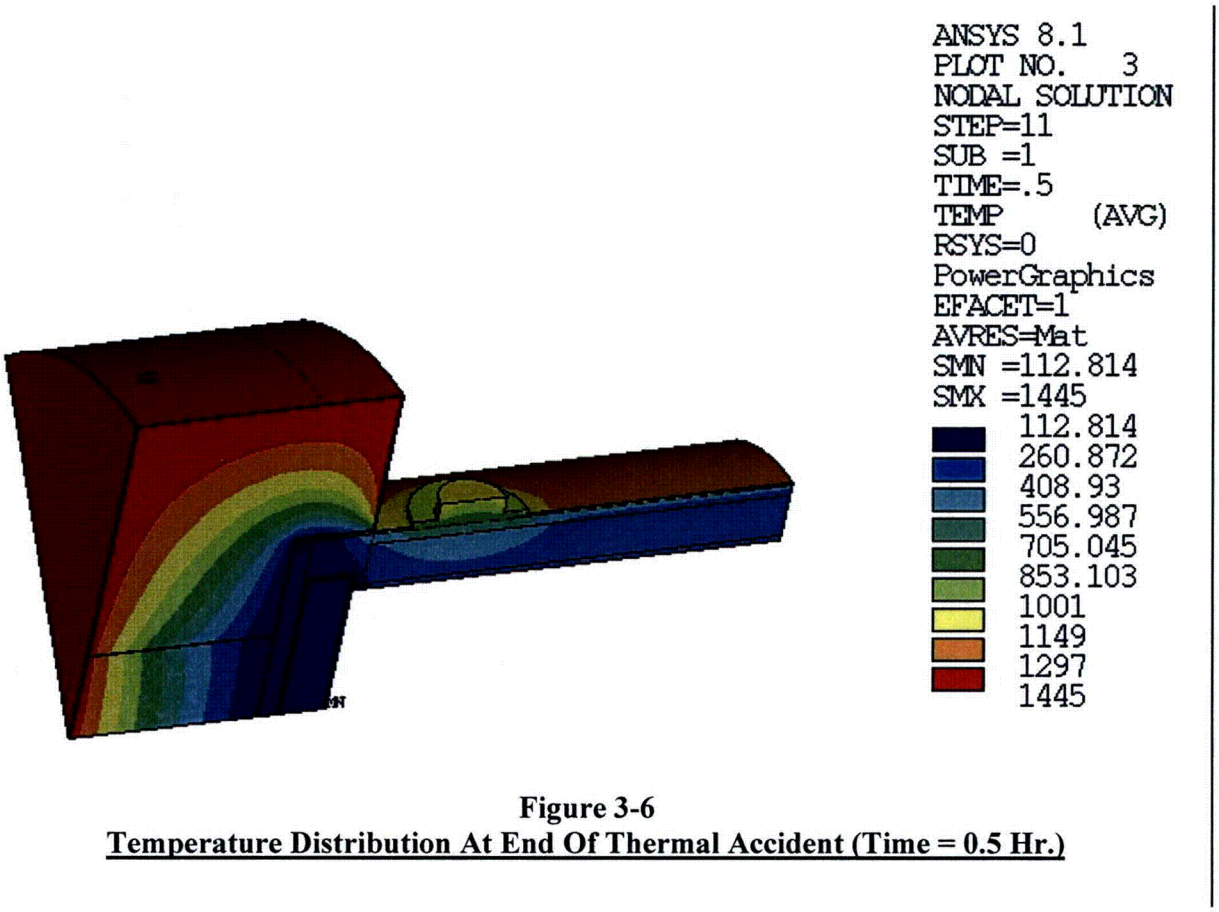

Figure 3-6
Temperature Distribution At End Of Thermal Accident (Time = 0.5 Hr.)

identified by the maximum temperature for the range represented by that color.

The results of the analyses show that the lead temperature reaches a maximum of 571°F (299°C) 0.5 hours after the start of the thermal accident. This temperature occurs at a single point behind the trunnion at its centerline and is significantly below the melting point of 621°F (327°C) for lead. The temperature is significantly lower at locations other than this point. The maximum temperature distribution in the lead region at this time is shown in Figure 3-7. The maximum seal temperature is 249°F (121°C) which occurs at 5.2 hours from the start of the thermal accident. Figure 3-8 shows the history of maximum component temperatures during Fire and Post-Fire periods in the thermal model.

3.5.4 Maximum Internal Pressure

The maximum cask cavity internal pressure during the hypothetical thermal accident is calculated as shown in Section 3.4.4 with an average gas temperature of 446°F and a "cold wall" temperature of 173°F.

To be conservative a value of 516°F and 210°F is used for average gas temperature and cold wall temperature respectively.

Partial water vapor pressure at cavity "cold wall" temperature (210°F),

P_w = 14.1 psia (Ref. 3-5)

Partial air pressure at 516°F,

P_a = 14.7 x (516 + 460) / (70 + 460)
= 27.1 psia

Total cavity pressure

$P_{total} = P_w + P_a$
= 41.2 psia

This pressure is lower than the MNOP of 30 psig.

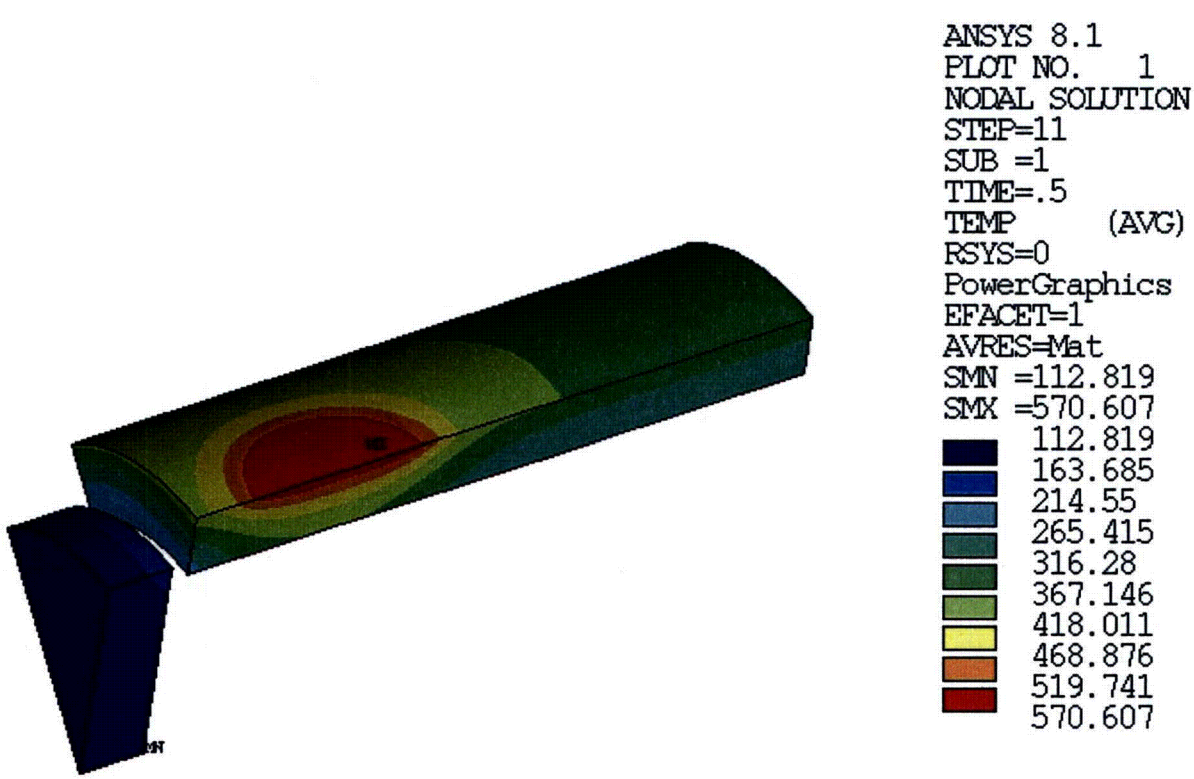

Figure 3-7
Maximum Temperature Distribution, Lead Regions of Packaging

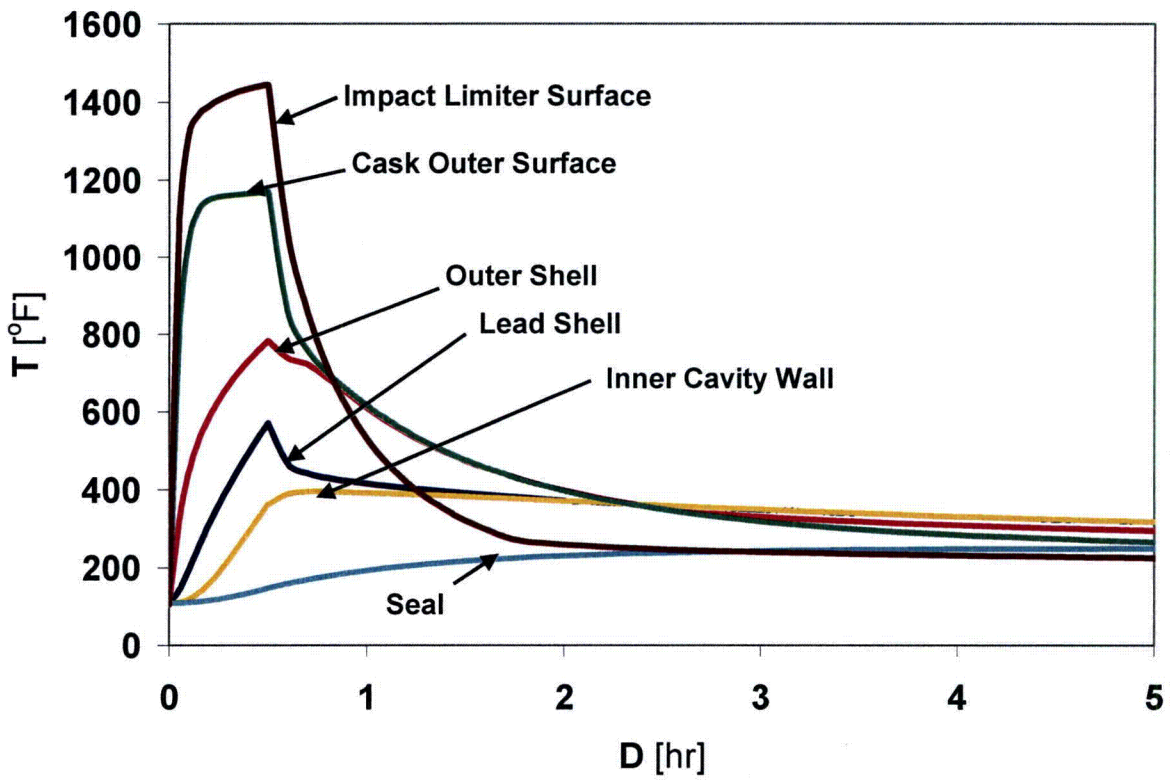

Figure 3-8
History Of The Maximum Component Temperatures During Fire And Post Fire Periods

3.5.5 Maximum Thermal Stresses

The maximum thermal stresses during the hypothetical thermal accident are calculated in Section 2.7 of Chapter Two. The thermal-stress analysis is performed using the cask model described in Section 3.4.1.1.

The maximum thermal stresses in Appendix 2.10.1 are calculated using the average temperature distribution at the time the individual temperatures peak and at the time after they equalize.

The average inner shell, outer shell and lead temperatures used in the thermal stress analysis are 411°F, 560°F and 473°F respectively as shown in Appendix 2.10.1, page 2.10.1-18 at the time the individual temperatures peak. The corresponding average temperatures in the analysis in Section 3.5.3 for inner shell, outer shell and lead shell are 292°F, 496.4°F and 350°F respectively. This shows that the values used in Appendix 2.10.1 are bounding.

The average inner shell, outer shell and lead shell temperatures are 460°F, 470°F and 460°F respectively as shown in Appendix 2.10.1, page 2.10.1-18 at the time they equalize. The corresponding average temperatures in the Section 3.5.3 analysis for inner shell, outer shell and lead shell are 354°F, 358°F and 351°F respectively. This shows that the values used in Appendix 2.10.1 are bounding.

Therefore, thermal stress calculation in Appendix 2.10.1 remains bounding and no revision is required.

3.5.6 Evaluation of Package Performance

The lead temperature remains below the melting point and the analyses presented in Chapters 2, 3, and 4, show that the package will withstand the hypothetical thermal accident without compromising the structural integrity of the package.

3.6 REFERENCES

3-1 U.S. Code of Federal Regulations 10CFR71, "Packaging and Transportation of Radioactive Material."

3-2 Kreith, F., "Principles of Heat Transfer," 3rd Edition, Harper and Row Publishers, 1973.

3-3 DeSalvo G. J. and Swanson, J. A., "ANSYS Engineering Analysis System," User's Manual Rev. 4.3, Swanson Analysis Systems, Inc., Houston, 1987.

3-4 Shappert, L. B., "Cask Designers Guide, A Guide for the Design, Fabrication and Operation of Shipping Casks for Nuclear Applications," ORNL-NSIC-68, UC-80-Reactor Technology, Oak Ridge National Laboratory, 1970.

3-5 Rohsenow et.al, "Handbook of Heat Transfer", McGraw-Hill Book Company, New York, 1973.

3-6 ANSYS Computer Code User's Manuals, Version 8.1.

3-7 Gregory, et al., "Thermal Measurements in a Series of Long Pool Fires", SANDIA Report, SAND 85-0196, TTC-0659, 1987.

3-8 U.S. Department of Agriculture, Forest Service, "Wood Handbook: Wood as an Engineering Material".

3-9 Rohsenow, Hartnett, Cho, "Handbook of Heat Transfer", 3rd Edition, 1998.

3-10 NUHOMS®-MP197 Transport Packaging Safety Analysis Report, Rev.4, Transnuclear, Inc, CoC 9302, Docket No. 71-9302.

CHAPTER FOUR

CONTAINMENT

LIST OF FIGURES

Figure 4-1 TN-RAM Containment Boundary Components (original lid) 4-9
Figure 4-2 TN-RAM Containment Boundary Components (optional lid/shield disk) 4-11

CHAPTER FOUR
CONTAINMENT

4.1 CONTAINMENT BOUNDARY

The containment boundary of the TN-RAM is formed by the containment vessel walls, bottom, flange and lid up to the innermost of the two concentric lid O-rings, the O-ring itself, the cover and O-ring on the vent port, and the pipe, housing, O-ring and cover of the drain port, as shown in Figures 4-1 and 4-2.

4.1.1 Containment Vessel

The containment vessel consists of the inner shell, the bottom head, the closure flange, the lid plate, and the closure bolts. The inner shell is a 35 inch I.D. right circular cylinder with an 111 inch cavity height formed from 0.75 inch plate. To this are welded the bottom, a 0.5 inch thick flanged only head, and the closure flange.

The lid is a 2.5 inch thick plate, and is bolted to the closure flange by sixteen 1.5 inch diameter bolts. For the purposes of containment, the lead, steel shell, and bottom plate which are attached to the inside of the lid are not considered part of the containment boundary. Similarly for the optional lid, the shield disk is not part of the containment boundary.

The shell, bottom, closure flange and original lid are fabricated from type 304 stainless steel. The lid portion of the optional lid is fabricated from XM-19 stainless steel.

All welds are full penetration welds performed in accordance with the requirements of the ASME Boiler and Pressure Vessel Code Section III, Subsection NB-4241 for a Type I butt joint. Non-destructive examination includes radiographic and liquid dye penetrant methods using the acceptance standards of ASME Section III, Subsection NB-5300.

The following seals form of the part of the containment boundary:

- the inner silicone O-ring on the lid
- the silicone O-ring on the vent port cover
- the silicone O-ring on the drain port cover

All seals are face-mounted in dovetail grooves on the lid and covers. The volume of the grooves is designed to allow sufficient room so the mating metal surfaces can be brought into contact by the bolts, thereby ensuring uniform seal deformation. All surfaces in contact with the seals are machined to a 63 microinch (maximum) R_a surface finish.

All seals are protected from damage during the hypothetical thermalaccident by the insulating properties of the impact limiters which keep the seal temperatures below their 437°F operating limit (Ref. 4-1, Table A3-13) as demonstrated in Chapter 3. The low temperature operating limit for this material is -65°F (Ref. 4-1, Table A3-13). Therefore, the cask will maintain an adequate seal throughout the full range of temperature specified in 10CFR71.71 and 71.73 for normal and hypothetical accident conditions.

$$C_N = \frac{4.31(\text{Ci})}{1.21\text{E}6(\text{cc})} = 3.56\text{E}-6 \text{ Ci/cc}$$

The maximum permissible release rate is $A_2 x 10^{-6}$Ci/hr

For Co^{60}, A_2=11 Ci. However, the A_2 value at the time of initial application was 7 Ci. Using A_2 = 7 results in a conservative value for the reference leak rate. Thus the original values calculated below are left unchanged. Therefore:

$$R_N = \frac{7.0\text{E}-6 \text{ Ci/hr}}{3600 \text{ sec/hr}} = 1.94\text{E}-9 \text{ Ci/sec}$$

The maximum permissible leakage rate during transport is:

$$L_N = \frac{R_N}{C_N} = \frac{1.94\text{E}-9}{3.56\text{E}-6} = 5.45\text{E}-4 \text{ cc/sec}$$

From example 23 in Ref. 4.3, a test leakage rate can be calculated for this unchoked, continuous flow condition using the following equation:

$$L_{RN} = \frac{L_N(\mu_N)}{(0.0185)} * \frac{(0.99)}{(P_U - P_d)}$$

From Chapter 3, the containment gas (air) temperature and a pressure for normal conditions of transport are 213°F and 23.8 psia respectively. Assuming the leaking gas temperature is the average of the containment wall and the cavity gas temperature, the viscosity of air at 187°F equal to 0.0214 cp and a pressure of 1.62 atm;

$$L_{RN} = 5.45\text{E}-4 \frac{(0.0214)}{(0.0185)} * \frac{(0.99)}{(1.62-1.0)} = 1.01\text{E}-3 \text{ std cc/sec}$$

The reference air leakage rate under normal conditions for the TN-RAM Packaging is 1.01E-3 std cc/sec.

4.3 CONTAINMENT REQUIREMENTS FOR HYPOTHETICAL ACCIDENT CONDITIONS

The release of radioactive material is limited to 10 A_2 of krypton-85 and A_2 for other radioactive material per week under the conditions of the hypothetical accident tests of 10CFR71.73, in accordance with 10CFR71.51(a)(2).

4.3.1 Fission Gas Products

There are no fission gas products in the TN-RAM contents.

4.3.2 Containment of Radioactive Material

Assuming that all of the Co^{60} (crud) on the irradiated hardware (calculated in Section 4.2.1), becomes an aerosol, the available activity is:

Note that the Co^{60} crud activity of 94.1 Ci utilized herein is conservative compared to that calculated in Section 4.2.1 (86.3 Ci).

$$C_A = \frac{94.1\ (\text{Ci})}{1.42\text{E}6\ \text{cc}} = 6.63\text{E}-5\ \text{Ci/cc}$$

and the maximum permissible release rate

$$R_A = \frac{7\ \text{Ci/week}}{6.05\text{E}5\ \text{sec/week}} = 1.16\text{E}-5\ \text{Ci/sec}$$

And $$L_A = \frac{R_A}{C_A} = \frac{1.16\text{E}-5}{6.63\text{E}-5} = 0.175\ \text{cc/sec}$$

It can easily be seen that the leak rate for the normal conditions of transport are more restrictive. Note that the Co^{60} A_2 value of 7 Ci (utilized in the original calculations) is conservatively utilized to determine the accident leak rate.

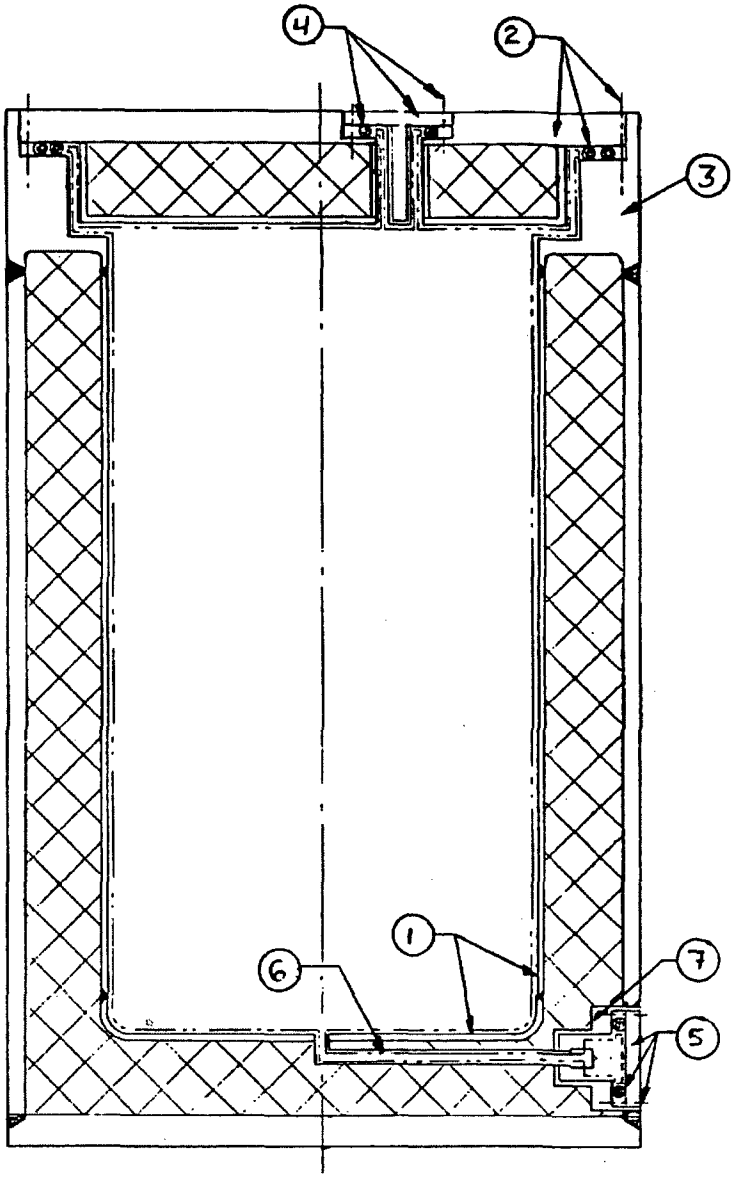

Figure 4-1
TN-RAM Containment Boundary Components (original lid)

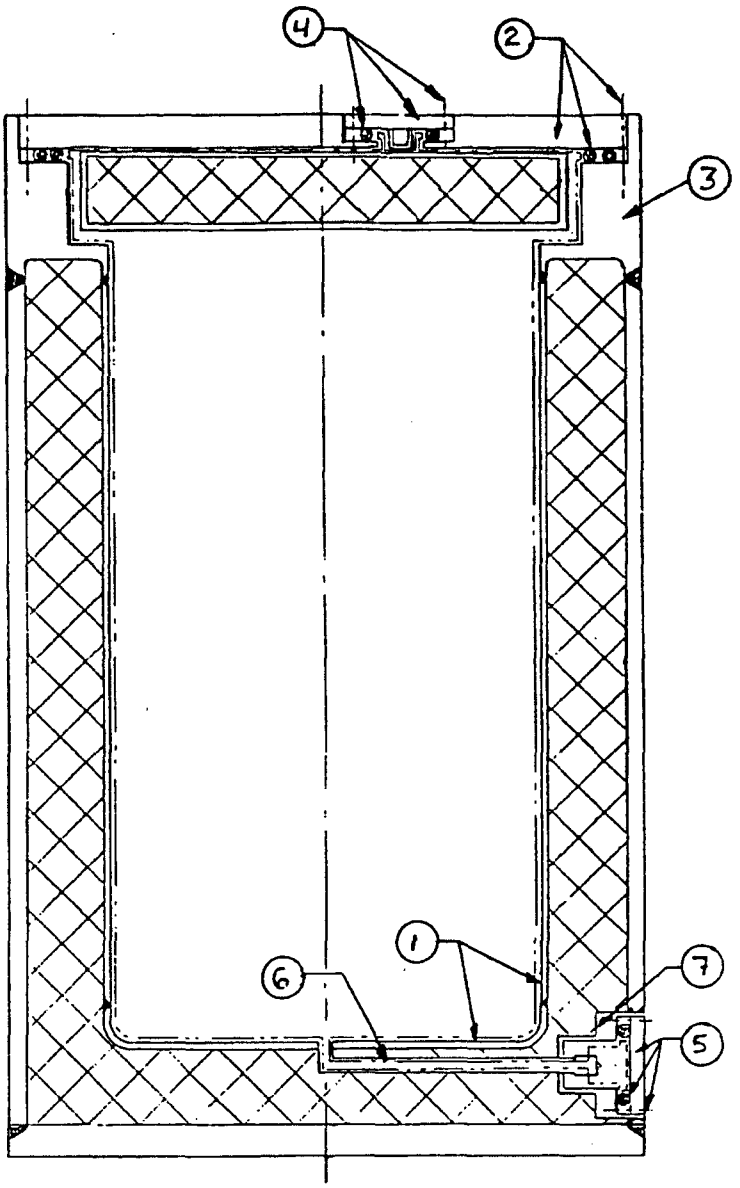

TN-RAM CONTAINMENT BOUNDARY COMPONENTS

Figure 4-2
TN-RAM Containment Boundary Components (optional lid/shield disk)

FIGURE 4-2 (Continued)

1. Drawing not to scale. Features exaggerated for clarity.
2. Dashed line (_____ _ _ _____) indicates containment boundary.
3. Containment boundary components are listed below:
   1. Cask body inner shell
   2. Lid assembly outer plate, closure bolts, and inner O-ring
   3. Bolting flange
   4. Vent port cover plate, bolts, and seals
   5. Drain port cover plate, bolts, and seals
   6. Drain tube
   7. Drain coupling housing

CHAPTER FIVE
SHIELDING EVALUATION

5.1 DISCUSSION AND RESULTS

An evaluation of the shielding performance of the TN-RAM is performed to demonstrate compliance with the does rate limits of 10CFR71.47. This also demonstrates compliance with the accident does rate limit of 10CFR71.51(a)(2) because the components of the package shielding which are not an integral part of the body (the impact limiters, the lid, and the thermal shield) will remain in position under all accident conditions, as demonstrated in Appendices 2.10.1 and 2.10.2. The contents of the TN-RAM consist of irradiated solid materials which have been activated by neutron absorption to a maximum radioactivity of 1272 times the A_2 value of the radionuclide mixture, or 14,000 Ci of Co-60. The most important isotope for shielding concern is Co-60 with an A_2 value of 11 Ci.

The most significant shielding design features of the TN-RAM are the cask body and lid, which consist of an inner layer of stainless steel, followed by lead and an outer layer of stainless steel. An optional two piece lid is also evaluated. It has the same layers of lead and steel but with slightly different dimensions. The impact limiters, which consist of wood in stainless steel cases, provide additional axial shielding, and the thermal shield, a stainless steel shell, provides additional radial shielding. The shield layers and thickness are listed in Table 5-1.

The shielding analysis of the TN-RAM is conducted with regulatory acceptable codes from the SCALE system (Ref. 5-1). Conservative modeling of the source provides an upper bound on the dose rates. Table 5-2 summarizes the calculated does rates and shows that all applicable limits are satisfied.

Table 5-1
TN-RAM Shield Configuration

Axial, Bottom & Top	Radial
0.5 inch steel	0.75 inch steel
6.06 inch lead (1)	5.875 inch lead (2)
2.5 inch steel	1.5 inch steel
0.125 inch steel (3)	0.25 inch steel (4)
21.88 inch balsa (3)	
0.125 inch steel (3)	

(1) Nominal lead thickness is 6.06 inches; minimum lead thickness at bottom is 5.69 inches, corresponding to maximum length of inner vessel and minimum length of outer; minimum lead thickness at top is 5.88 inches (5.69 inches for optional lid).

(2) 5.875 nominal, 5.75 minimum

(3) Impact limiter

(4) Thermal shield

5.2 SOURCE SPECIFICATION

5.2.1 Gamma Source

The source is modeled as 14,000 curies of Co^{60}, which is 1,272 times its A_2 value of 11 Ci. This is almost 4 times the Co^{60} activity expected for typical shipments as discussed in Section 1.2.3.

Cobalt-60 emits two photons per disintegration, one at 1.17 and one at 1.33 MeV. Because the average energy of the thirty-seventh group in the SCALE 27-18 library is 1.166 MeV, the source strength is scaled upward by the ratio of the average source energy to the average group energy, 1.25/1.166. The source volume is presumed to be a cylinder 108 inches long and 34.5 inches in diameter, slightly less than the TN-RAM cavity size to account for the waste container. The volume of this source is 1.654E6 cm^3. The resulting source strength is:

$$\frac{14000\,\text{Ci}}{1.654\text{E}6\ \text{cm}^3} * \frac{2\,\text{pho}}{\text{dis}} * 3.7\,\text{E}10\,\frac{\text{dis/s}}{\text{Ci}} * \frac{1.25}{1.166}$$

$$= 6.715\text{E}8\ \frac{\text{pho/s}}{\text{cm}^3} \qquad \text{at 1.166 MeV.}$$

5.2.2 Neutron Source

The TN-RAM is not intended to carry more than minute traces of neutron sources which may occur in surface contamination (crud) on the irradiated solid materials. No neutron source is specified in the analysis.

5.3 MODEL SPECIFICATION

5.3.1 Description of Radial and Axial Shielding Configurations

The one-dimensional shielding analysis uses an infinite cylinder for the radial model and an infinite slab for the axial model. The models use the minimum lead thickness determined from the tolerances on the inner and outer stainless steel vessels. As the top and bottom nominal lead thicknesses are the same, the top and bottom are treated by one axial analysis, using the minimum lead thickness of the bottom. For the optional lid, where some of the lead is replaced with steel, the minimum lead thickness (5.69″) is identical to that utilized in the shielding evaluation. The steel thickness (excluding the impact limiters) for the optional lid is 3.25″ and is greater than that utilized in the shielding analysis (2.75″). Therefore, no new shielding evaluation is performed with the optional lid as the material thicknesses are shown to be bounded by those utilized in the existing calculational models. Half the source length is modeled axially, with a reflective boundary at the source midplane. The waste container (liner) is not modeled, conservatively ignoring its shielding contribution. The shielding models are shown in Figures 5-1 and 5-2.

5.3.2 Source and Shielding Regional Densities

The source is assumed to consist of stainless steel with a high specific activity of 0.025 Ci of Co^{60} per gram. This results in 5.6E5 g (1235 lb) of waste, providing a very conservative estimate of self shielding compared to the TN-RAM payload of 9500 lb. and a typical shipment described in Section 1.2.3 (3785 Ci/shipment at 0.0025 Ci/g). The waste density is 5.6E5/g/1.654E6 cm^3 = 0.34 g/cm^3. Both the waste, as well as all stainless steel packaging components are modeled as iron only, because the exact chemical composition is unimportant for photon shielding.

The steel components of the packaging are modeled as iron at 7.85 g/cm^3, a conservative low value for stainless steel, and the lead is modeled at 11.0 g/cm^3 compared to the theoretical

CHAPTER SEVEN
OPERATING PROCEDURES

TABLE OF CONTENTS

Pg

7.1 Procedures for Loading Package 7-2

7.1.1 Receipt of Empty Package 7-2

7.1.2 Wet Loading 7-3

7.1.3 Dry Loading 7-9

7.2 Procedures for Unloading Package 7-13

7.2.1 Unloading a Loaded Package Horizontally 7-13

7.2.2 Unloading a Loaded Package Vertically 7-14

7.3 Preparation of Empty Package for Transport 7-16

CHAPTER SEVEN
OPERATING PROCEDURES

This chapter contains TN-RAM loading and handling procedure guidelines which show the general approach to cask operational activities. The information in this chapter will be used to prepare site specific procedures. Operational steps which must be performed in order to maintain the validity of cask transport regulations and safety analysis conclusions are identified by underlined procedural steps.

The procedures in this section are for those activities associated with the loading and transport of irradiated materials from user facilities to burial sites. Cask loading is normally performed wet with the cask oriented vertically in a spent fuel pool, and cask unloading operations are normally performed dry with the cask oriented horizontally at a burial site.

An optional two-piece lid consisting of a shield disk and outer lid plate can also be used in a dry top-loading facility and a dry top-unloading facility.

The final steps of cask acceptance testing are performed at the loading site prior to the cask being transported for the shipment.

7.1 PROCEDURES FOR LOADING PACKAGE

7.1.1 Receipt of Empty Package

7.1.1.1 Upon cask arrival on the transport vehicle, perform receipt inspection to check for damage or irregularities and perform a radiation survey.

7.1.1.2 After removing the security wires, remove impact limiter attachment bolts and remove the front and rear impact limiters using a suitable crane and two legged sling.

7.1.1.3 Remove the front and rear trunnion tie-downs.

7.1.1.4 Attach the lift beam to a suitable crane hook and engage the lift beam to the two front trunnions.

7.1.1.5 Rotate the cask from the horizontal to the vertical position.

7.1.1.6 Lift the cask from the transport vehicle. Place the cask in the preparation area.

7.1.1.7 Disengage the lift beam from the cask.

7.1.1.8 If necessary, clean the cask external surfaces of road dirt.

7.1.2 Wet Loading

7.1.2.1 Remove the lid gasket port plug and detorque the lid bolts in an approved sequence.

Note: The cask may be filled with water in the preparation area (lid on or off) or as the cask is lowered into the pool with the lid off.

7.1.2.2 Remove the cover from the Vent port.

7.1.2.3 Install the lid lifting attachments.

7.1.2.4 Remove the cask lid.

7.1.2.5 Engage the lift beam(s) to the cask.

7.1.2.6 Lift the cask from the preparation area and position over the cask loading area in the pool.

7.1.2.7 Lower the cask into the pool while spraying the cask with clean water.

7.1.2.8 Continue to lower the cask until it is on the pool bottom.

7.1.2.9 Disengage the lift beam(s) from the cask.

7.1.2.10 Deleted

7.1.2.11 Deleted

7.1.2.12 Install the cask seal surface protective cover.

7.1.2.13 Using the appropriate handling tool and suitable hoist, load the cask cavity. Verify that the cask is full or install appropriate component spacers to restrain the contents during transport. Record the contents and location on the cask loading report to the extent practical.

7.1.2.14 Remove the cask seal surface protective cover.

7.1.2.15 Inspect the O-rings in the lid for damage and replace if defects are noted, with new o-rings which have been determined to be free of defects and have a current shelf life, in accordance with the following. Record inspection results on the cask loading report.

7.1.2.15.1 Remove the defective O-ring.

7.1.2.15.2 Clean the O-ring groove.

7.1.2.15.3 Inspect the new O-ring to determine that it is free of defects.

7.1.2.15.4 Position the O-ring uniformly around the lid over the O-ring groove.

7.1.2.15.5 Press lightly at four diametrically opposite positions.

7.1.2.15.6 Continue to press the O-ring at diametrically opposite positions until it is fully seated in the gasket groove.

7.1.2.15.7 Inspect the new O-ring to verify that it is free of defects. Record inspection results on the cask loading report.

7.1.2.16 Transfer the lid to a position directly over the cask cavity. Establish correct lid orientation using the orientation marks and lower the lid until fully seated. Visually verify proper lid installation.

7.1.2.17 Continue lowering the lift beam(s) and engage the lift beam(s) to the cask.

7.1.2.18 Raise the cask to the pool surface, survey the cask for safe radiation levels and check that the lid is properly seated. Wash down exposed cask surfaces and lift beam surfaces with clean water.

7.1.2.19 Install two or more lid bolts hand tight.

7.1.2.20 Slowly remove the cask from the pool while thoroughly washing all exposed surfaces with a clean water spray.

7.1.2.21 Move the cask to the preparation area.

7.1.2.22 Disengage the lid lifting attachments and lift beam(s).

7.1.2.23 Survey and decontaminate the cask surfaces as required to permit safe working conditions.

7.1.2.24 Inspect the lid bolts. Replace defective bolts and note any defect indications on the cask loading report. Apply a light coating of an approved lubricant to the bolt threads and install all 16 lid bolts. Tighten to hand tight. Torque all lid bolts to 950 ±50 ft-lbs. in several stages using an approved torquing sequence.

7.1.2.25 Install the Vacuum Drying System (VDS) to the lid gasket port and vacuum dry the lid O-ring interspace until the pressure is reduced to 10, +2, -0 mbar.

7.1.2.26 Perform a pressure rise leakage test for assembly verification of the cask lid. The leakage rate is calculated as:

$$L_R = \frac{V * \Delta P * 298}{t * 1013 * T}$$

where V	=	test volume (cc)
ΔP	=	measured pressure difference (mbar)
t	=	elapsed time for the test (sec)
and T	=	temperature of test (°K)

It is assumed that over the relatively short duration of the test (1-2 min.), the change in temperature is insignificant. The acceptance criteria is that L_R be no greater than 1×10^{-1} std-cm^3/sec.

7.1.2.27 Install the lid gasket port plug. Remove the Drain port cover, and drain the cask.

7.1.2.28 Connect the VDS to the Vent port and the drain bottle to the Drain port.

7.1.2.29 Using the VDS, lower the pressure in the cask to approximately 40 mbar. Isolate the vacuum pump and vent the cask to allow residual moisture to condense and collect in the drain bottle. Repeat several times until no more water collects in the drain bottle.

7.1.2.30 Disconnect the drain bottle from the Drain port.

7.1.2.31 Perform the cask dryness verification test as follows:

a. Evacuate the cask cavity until a stable vacuum of 10, +2, -0 mbar is indicated.

b. Isolate the VDS from the cask cavity.

c. Verify that the pressure rise over a period of 10 minutes does not exceed 6 mbar. If this pressure rise is exceeded repeat steps a and b until the acceptance criteria is satisfied.

NOTE: If the pressure rise for successive tests is constant or increases, a leak in the system is indicated and must be corrected before proceeding.

7.1.2.32 Remove the VDS connector from the vent port.

7.1.2.33 Install the Vent and Drain port covers and bolts. Torque the bolts to 25 ±5 ft-lbs.

7.1.2.34 Place the test bell over the vent cover and use the VDS to reduce the pressure in between the vent port O-ring and the O-ring on the test bell to 7-10 mbar. Isolate the VDS and perform a pressure rise leakage rate test of the vent port cover. The calculated leakage rate, using the equation in 7.1.2.26, shall be no greater than 1×10^{-1} std-cm^3/sec.

7.1.2.35 Repeat the test of Steps 7.1.2.34 for the Drain port cover.

7.1.2.36 If any test indicates a leakage greater than the allowable rate, the leakage area shall be identified, repaired as needed and the test repeated until the acceptance criteria is satisfied.

7.1.2.37 Re-engage the lift beam to the cask.

7.1.2.38 Lift the cask off preparation area, place the rear trunnions on transport vehicle rear trunnion supports and rotate cask from the vertical to horizontal position. Disengage the lift beam from the cask.

7.1.2.39 Install and torque front and rear trunnion tie-downs.

7.1.2.40 Install the front and rear impact limiters and torque attachment bolts diametrically to 40-50 ft-lbs. Repeat torquing sequence to 300 ±20 ft.-lb. for unlubricated bolts or to 180 ±20 ft-lbs. for lubricated bolts.

7.1.2.41 Install security seals on impact limiter bolts.

7.1.2.42 Perform final radiation and contamination surveys to assure compliance with 10CFR71.47 and 71.87.

7.1.2.43 Apply appropriate labels to the package and vehicle in accordance with 49CFR172.

7.1.2.44 Prepare final shipping documentation.

7.1.2.45 Release the loaded cask for shipment.

7.1.3 Dry Loading

Note: This section assumes the optional two-piece lid is used for all dry loading.

7.1.3.1 Remove the lid gasket port plug and detorque the lid bolts in an approved sequence.

7.1.3.2 Remove the cover from the Vent port.

7.1.3.3 Install the lid lifting attachments.

7.1.3.4 Remove the cask lid.

7.1.3.5 Engage the lift beam(s) to the cask.

7.1.3.6 Lift the cask from the preparation area and move to loading area.

7.1.3.7 Disengage the lift beam(s) from the cask.

7.1.3.8 Attach a suitable crane to lid lifting sling.

7.1.3.9 Install the cask seal surface protective cover.

7.1.3.10 Remove the shield disk.

7.1.3.11 Using the appropriate handling tool and hoist, load the cask cavity. Verify that the cask is full or install appropriate component spacers to restrain the contents during transport. Record the contents and location on the cask loading report to the extent practical.

7.1.3.12 Replace the shield disk.

7.1.3.13 Remove the cask seal surface protective cover.

7.1.3.14 Move the cask to the preparation area for lid installation.

7.1.3.15 Inspect the O-rings in the lid for damage and replace if defects are noted, with new o-rings which have been determined to be free of defects and have a current shelf life, in accordance with the following. Record inspection results on the cask loading report.

7.1.3.15.1 Remove the defective O-ring.

7.1.3.15.2 Clean the O-ring groove.

7.1.3.15.3 Inspect the new O-ring to determine that it is free of defects.

7.1.3.15.4 Position the O-ring uniformly around the lid over the O-ring groove.

7.1.3.15.5 Press lightly at four diametrically opposite positions.

7.1.3.15.6 Continue to press the O-ring at diametrically opposite positions until it is fully seated in the gasket groove.

7.1.3.15.7 Inspect the new O-ring to verify that it is free of defects. Record inspection results on the cask loading report.

7.1.3.16 Attach the lid lifting attachment to cask lid.

7.1.3.17 Transfer the lid to a position directly over the cask cavity. Establish correct lid orientation using the orientation marks and lower the lid until fully seated. Visually verify proper lid installation.

7.1.3.18 Move the cask to the preparation area.

7.1.3.19 Disengage the lid lifting attachments and lift beam(s).

7.1.3.20 Survey and decontaminate the cask surfaces as required to permit safe working conditions.

7.1.3.21 Inspect the lid bolts. Replace defective bolts and note any defect indications on the cask loading report. Apply a light coating of an approved lubricant to the bolt threads and install all 16 lid bolts. Tighten to hand tight. Torque all lid bolts to 950 ±50 ft-lbs. in several stages using an approved torquing sequence.

7.1.3.22 Install the Vacuum Drying System (VDS) to the lid gasket port and evacuate the lid O-ring interspace until the pressure is reduced to 10, +2, -0 mbar.

7.1.3.23 Perform a pressure rise leakage test for assembly verification of the cask lid. The leakage rate is calculated as:

$$L_R = \frac{V * \Delta P * 298}{t * 1013 * T}$$

Where V	=	test volume (cc)
ΔP	=	measured pressure difference (mbar)
t	=	elapsed time for the test (sec)
and T	=	temperature of test (°K)

It is assumed that over the relatively short duration of the test (1-2 min.), the change in temperature is insignificant. The acceptance criteria is that L_R be no greater than 1 x 10^{-1} std-cm^3/sec.

Install the lid gasket port plug.

7.1.3.24 Perform the cask dryness verification test as follows:

a. Evacuate the cask cavity until a stable vacuum of 10, +2, -0 mbar is indicated.

b. Isolate the VDS from the cask cavity.

c. Verify that the pressure rise over a period of 10 minutes does not exceed 6 mbar. If this pressure rise is exceeded repeat steps a and b until the acceptance criteria is satisfied.

NOTE: If the pressure rise for successive tests is constant or increases, a leak in the system is indicated and must be corrected before proceeding.

7.1.3.25 Remove the VDS connector from the vent port.

7.1.3.26 Install the Vent port cover and bolts. Torque the bolts to 25 ±5 ft-lbs.

7.1.3.27 Place the test bell over the vent cover and use the VDS to reduce the pressure in between the vent port O-ring and the O-ring on the test bell to 7-10 mbar. Isolate the VDS and perform a pressure rise leakage rate test of the vent port cover. The calculated leakage rate, using the equation in 7.1.2.23, shall be no greater than 1 x 10^{-1} std-cm^3/sec.

7.1.3.28 Repeat the test of Steps 7.1.2.27 for the Drain port cover.

7.1.3.29 If any test indicates a leakage greater than the allowable rate, the leakage area shall be identified, repaired as needed and the test repeated until the acceptance criteria is satisfied.

7.1.3.30 Re-engage the lift beam to the cask.

7.1.3.31 Lift the cask off preparation area, place the rear trunnions on transport vehicle rear trunnion supports and rotate cask from the vertical to horizontal position.

7.1.3.32 Install and torque front and rear trunnion tie-downs.

7.1.3.33 Install the front and rear impact limiters and torque attachment bolts diametrically to 40-50 ft-lbs. Repeat torquing sequence to 300 ±20 ft.-lb. for unlubricated bolts or to 180 ±20 ft-lbs. for lubricated bolts.

7.1.3.34 Install security seals on impact limiter bolts.

7.1.3.35 Perform final radiation and contamination surveys to assure compliance with 10CFR71.47 and 71.87.

7.1.3.36 Apply appropriate labels to the package and vehicle in accordance with 49CFR172.

7.1.3.37 Prepare final shipping documentation.

7.1.3.38 Release the loaded cask for shipment.

7.2 PROCEDURES FOR UNLOADING PACKAGE

7.2.1 Unloading a Loaded Package Horizontally

7.2.1.1 Upon arrival of the loaded cask at the burial site, perform receipt inspection. Inspect for damage, verify security seals are intact and perform radiation survey.

7.2.1.2 Remove the front impact limiter using a suitable crane and two legged sling. Rear impact limiter may also be removed.

7.2.1.3 Remove the front and rear trunnion tie-downs.

7.2.1.4 Attach the horizontal lift device to a suitable crane and then engage the front and rear trunnions.

7.2.1.5 Lift the cask slowly in the horizontal position and transfer it onto an unloading cradle.

7.2.1.6 Disengage the lift device from the cask.

7.2.1.7 Install a horizontal lid lifting fixture to lid.

7.2.1.8 Remove the lid gasket port plug. Detorque the lid bolts in an approved sequence.

NOTE: Perform the following steps remotely using manipulator crane, appropriate remote tooling, viewing equipment and personnel radiation protection as appropriate for the facility.

7.2.1.9 Slowly remove the lid from the cask.

7.2.1.10 If the optional two-piece lid is used, install the shield disk horizontal lifting fixture to the shield disk. Slowly remove shield disk from the cask and place in a lay down area.

7.2.1.11 Place the cask seal protector on front face of the cask and attach liner or waste removal tools.

7.2.1.12 Unload the cask contents into disposal area in accordance with site-approved procedures.

NOTE: The following steps may be performed hands-on.

7.2.1.13 Remove the cask seal protector plate and install the shield disk and cask lid.

7.2.1.14 Install and tighten all lid bolts to hand tight. Torque all bolts so 950 ±50 ft-lbs. in several stages using an approved torquing sequence. Install the lid gasket port plug.

7.2.2 Unloading a Loaded Package Vertically

7.2.2.1 Upon arrival of the loaded cask at the burial site, perform receipt inspection. Inspect for damage, verify security seals are intact and perform radiation survey.

7.2.2.2 After removing the security wires, remove the impact limiter attachment bolts and remove the front and rear impact limiters using a suitable crane and two legged sling.

7.2.2.3 Remove the front and rear trunnion tie-downs.

7.2.2.4 Attach a lift beam to a suitable crane hook and engage the lift beam to the two front trunnions.

7.2.2.5 Rotate the cask from the horizontal to the vertical position.

7.2.2.6 Lift the cask from the transport vehicle. Place the cask in the preparation area.

7.2.2.7 Disengage the lift beam from the cask.

7.2.2.8 If necessary, clean the cask external surfaces of road dirt.

7.2.2.9 Remove the lid gasket port plug and detorque the lid bolts in an approved sequence.

7.2.2.10 Remove the cover from the Vent port.

7.2.2.11 Install the lid lifting attachments.

7.2.2.12 Engage the lift beam(s) to the cask.

7.2.2.13 Lift the cask from the preparation area and move to the unloading area.

7.2.2.14 Disengage the lift beam(s) from the cask.

7.2.2.15 Attach a suitable crane to lid lifting sling and remove the lid.

7.2.2.16 Install the cask seal surface protective cover.

7.2.2.17 Remove the shield disk.

NOTE: Perform the following steps remotely using manipulator crane, appropriate remote tooling, viewing equipment and personnel radiation protection as appropriate for the facility.

7.2.2.18 Using the appropriate handling tool and hoist, unload the cask contents into the disposal area in accordance with site-approved procedures.

NOTE: The following steps may be performed hands-on.

7.2.2.19 Replace the shield disk.

7.2.2.20 Remove the cask seal surface protective cover.

7.2.2.21 Move cask to the preparation area for lid installation.

7.2.2.22 Attach the lid lifting attachment to the cask lid.

7.2.2.23 Transfer the lid to a position directly over the cask cavity. Establish correct lid orientation using the orientation marks and lower the lid until fully seated. Visually verify proper lid installation.

7.2.2.24 Disengage the lid lifting attachments and lift beam(s).

7.2.2.25 Survey and decontaminate the cask surfaces as required to permit safe working conditions.

7.2.2.26 Install all 16 lid bolts. Tighten to hand tight. Torque all lid bolts to 950 ±50 ft-lbs. in several stages using an approved torquing sequence. Install the lid gasket port plug.

7.3 PREPARATION OF EMPTY PACKAGE FOR TRANSPORT

7.3.1 Engage the lifting device to the cask trunnions. Lift the cask off preparation area, place the rear trunnions on transport vehicle rear trunnion supports and rotate cask from the vertical to horizontal position. Disengage the lift beam from the cask.

7.3.2 Deleted

7.3.3 Deleted

7.3.4 Deleted

7.3.5 Install the front impact limiter and torque attachment bolts diametrically to 40-50 ft-lbs. Repeat torquing sequence to 300 ±20ft-lb for unlubricated bolts or to 180 ±20 ft-lb for lubricated bolts.

7.3.6 Apply appropriate transport labels to the package and vehicle.

7.3.7 Release loaded cask for shipment.

CHAPTER EIGHT
ACCEPTANCE AND MAINTENANCE PROGRAMS

TABLE OF CONTENTS

Page

8.0 INTRODUCTION 8-1

8.1 ACCEPTANCE TESTS 8-2
- 8.1.1 Visual Inspection
- 8.1.2 Structural and Pressure Tests
  - 8.1.2.1 Lid Shield Plug Lifting Attachment Load Tests
  - 8.1.2.2 Trunnion Load Test
  - 8.1.2.3 Hydrostatic Test
  - 8.1.2.4 Cask Weight Measurements
- 8.1.3 Leakage Rate Tests
  - 8.1.3.1 Containment System Fabrication Verification
  - 8.1.3.2 Impact Limiter Leakage Rate Test
  - 8.1.3.3 Humidity Test
- 8.1.4 Functional Tests
- 8.1.5 Test for Shielding Integrity
- 8.1.6 Review of Fabrication Records
- 8.1.7 Shielding Effectiveness Test
- 8.1.8 Thermal Effectiveness Test

8.2 MAINTENANCE PROGRAM 8-8
- 8.2.1 Structural and Pressure Tests
- 8.2.2 Leak Tests
- 8.2.3 Subsystems Maintenance
- 8.2.4 Valves, Rupture Discs and Gaskets on Containment Vessel
- 8.2.5 Shielding
- 8.2.6 Thermal
- 8.2.7 Miscellaneous

8.1 ACCEPTANCE TESTS

The following reviews, inspections and tests shall be performed on the TN-RAM cask prior to the first transport. Most of these inspections and tests will be performed at the Fabricator's facility prior to delivery to the loading site. These tests will be performed in accordance with written procedures prepared by the Fabricator and approved by Transnuclear.

The shielding effectiveness test (paragraph 8.1.7) shall be performed at the site following initial loading and prior to transport. This test shall be performed in accordance with approved written procedures.

8.1.1 Visual Inspection

After fabrication and prior to first use, visual inspection shall be performed of all accessible cask surfaces. The visual inspection includes verifying that all specified coatings are applied and the packaging is clean and free of cracks, pinholes, uncontrolled voids or other defects that could significantly reduce its effectiveness. The sealing surfaces on the flange, lid and covers are also inspected to ensure that there are no gouges, cracks or scratches that could result in an unacceptable leakage.

8.1.2 Structural and Pressure Tests

All of these tests shall be performed by the Fabricator. Prior to use, some tests, as indicated, will be repeated.

8.1.2.1 Lid and Shield Disk Lifting Attachment Load Tests

The lid lifting attachment bolt holes and shield disk lifting attachment bolt holes shall be load tested in the following manner: A ¾-10 UNC-2A eyebolt shall be inserted into each of the three tapped holes in the lid surface. Weights shall be added to the lid such that the total load of the lid and added weight is twice the lid weight. The eyebolts shall be attached to a sling system with a lifting angle of approximately 60 degrees from horizontal. The lid shall be lifted using the sling system and held for a period of at least ten (10) minutes. A ¾ – 10 UNC–2A eyebolt shall also be inserted into each of the three tapped holes in the shield disk upper surface. Weights shall be added to the shield disk such that the total load of the shield disk and added weight is twice the shield disk weight. The eyebolts shall be attached to a sling system with a lifting angle of approximately 60 degrees from horizontal. The shield disk shall be lifted using the sling system and held for a period of at least ten (10) minutes. At the conclusion of each test, the bolt holes shall be:

a) Visually examined for defects and permanent deformations.

b) Checked with a go/no-go gauge to verify that no damage to the threads have occurred.

8.1.2.2 Trunnion Load Test

a) A force equal to 1.5 times the design lift load will be applied for a period of 10 minutes on the top and bottom trunnion pairs at the center of the outer shoulders.

b) Following completion of the trunnion load tests the trunnion external surfaces will be examined by the liquid penetrant method for defects. Acceptance standards will be in accordance with Articles NC-5350 of Section III of the ASME Boiler and Pressure Vessel Code.

8.1.2.3 Hydrostatic Test

After the shielding integrity test, the TN-RAM cask body will be hydrostatically tested using demineralized water in accordance with the requirements of the ASME B&PV Code, Section III, Article NB-6200.

The test pressure of 45 psig (equals 1.5 MNOP of 30 psig will be maintained for a minimum time of ten (10) minutes. The cask body and closures will then be examined for any deformations or leakage.

8.1.2.4 Cask Weight Measurements

The assembled cask, as well as major individual components, shall be weighed with a precision of ± 0.5 percent.

8.1.3 Leakage Rate Tests

8.1.3.1 Containment System Fabrication Verification

A Containment System Fabrication Verification leakage rate test of the TN-RAM will be performed at the Fabricator's facility in accordance with the requirements of ANSI N14.5 and Section V of the ASME B&PV Code.

The following tests will be performed in accordance with approved, written procedures on the containment boundary. The gas pressure rise method or the helium mass spectrometer method will be used to perform these tests.

8.1.3.3 Humidity Test

After performing the impact limiter leakage rate test, a humidity test will be performed to determine that there is no in-leakage of water into the impact limiter container during fabrication. The dew point of a gas sample from the impact limiter container will be determined. The dew point measured shall be less than the equilibrium temperature of the impact limiter. The difference between the measured dew point and the impact limiter wall temperature shall be greater than twice the accuracy of the humidity test system.

8.1.4 Functional Tests

Installation and removal tests will be performed for the lid, shield disk, impact limiters, drain and vent port covers, shield plug and other fittings and inserts.

Each component will be observed for difficulties in installation and removal. After removal, each component will be visually examined for indications of deformation, galling, ease of use and proper functioning. Any such defects will be corrected prior to acceptance of the cask.

8.1.5 Test for Shielding Integrity

A gamma scan or equivalent test shall be performed on the cask after lead installation to detect any shielding deficiencies