Draft Submittal
(Pink Paper)

COMBINED
RO/SRO

~~Senio~~r Reactor Operator Written Exam

PART 1 OF 2

HARRIS AUGUST 2007

EXAM 05000400/2007301

1. 001 G2.2.25 001/NEW//HIGHER//SRO/HARRIS/7/2007/N0

Given the following:

- The unit is performing a plant startup from Refueling.
- In accordance with the requirements of technical specifications, Control Rod Drop times were performed in Mode 3.
- THREE (3) RCPs were operating during the control rod drop testing.
- Tave was stable at 557.5 degrees F during the testing.
- All control rod drop times were within acceptable limits.

Which ONE (1) of the following describes the limitations on continued operation, and the basis for the limitation?

A. Mode 2 CANNOT be entered because the Tave conditions for the rod drop test were not consistent with safety analysis assumptions.

B. Mode 2 CANNOT be entered because adequate Shutdown Margin and acceptable power distribution limits cannot be verified.

C. Mode 1 MAY be entered without restriction. Conditions of the rod drop test were consistent with conditions expected for safety analysis assumptions.

D. Mode 1 may be entered but power is limited because the Tave conditions for the rod drop test were not consistent with safety analysis assumptions.

C is correct in accordance with TS basis. Tave of 557 and 3 RCPs operating required.
A is incorrect because Tave is greater than 551 degrees F and 3 RCPs are operating, which is consistent with safety analysis assumptions
B is incorrect because the parameters can be assumed to be met as long as rods are within alignment
D is incorrect because conditions were consistent with safety analysis assumptions, and the reason that power level would be restricted is if less than 3 RCPs were operating during the rod drop test.
Equipment Control: Knowledge of bases in technical specifications for limiting conditions for operations and safety limits.

Question Number: 92

Tier 2 Group 2

Importance Rating: SRO 3.7

Technical Reference: TS 3.1.3.4 and basis
Proposed references to be provided to applicants during examination: None
Learning Objective: RODCS Obj 15
10 CFR Part 55 Content: 43.2

Comments:

10CFR55.43(b).2 because the SRO must apply technical specifications as well as their bases to a specific set of circumstances

REACTIVITY CONTROL SYSTEMS

ROD DROP TIME

LIMITING CONDITION FOR OPERATION

3.1.3.4 The individual shutdown and control rod drop time from the fully withdrawn position shall be less than or equal to 2.7 seconds from beginning of decay of stationary gripper coil voltage to dashpot entry with:

a. T_{avg} greater than or equal to 551°F, and

b. All reactor coolant pumps operating.

APPLICABILITY: MODES 1 and 2.

ACTION:

a. With the drop time of any rod determined to exceed the above limit, restore the rod drop time to within the above limit prior to proceeding to MODE 1 or 2.

b. With the rod drop times within limits but determined with two reactor coolant pumps operating, operation may proceed provided THERMAL POWER is restricted to less than or equal to 66% of RATED THERMAL POWER.

SURVEILLANCE REQUIREMENTS

4.1.3.4 The rod drop time of shutdown and control rods shall be demonstrated through measurement prior to reactor criticality:

a. For all rods following each removal of the reactor vessel head,

b. For specifically affected individual rods following any maintenance on or modification to the Control Rod Drive System which could affect the drop time of those specific rods, and

c. At least once per 18 months.

BORATION SYSTEMS (Continued)

condition of the reactor and the additional restrictions prohibiting CORE ALTERATIONS and positive reactivity changes in the event the single boron injection flow path becomes inoperable.

The limitation for a maximum of one charging/safety injection pump (CSIP) to be OPERABLE and the Surveillance Requirement to verify all CSIPs except the required OPERABLE pump to be inoperable below 325°F provides assurance that a mass addition pressure transient can be relieved by the operation of a single PORV.

The boron capability required below 200°F is sufficient to provide the required SHUTDOWN MARGIN as defined by Specification 3/4.1.1.2 after xenon decay and cooldown from 200°F to 140°F. This condition requires either 7150 gallons of 7000 ppm borated water be maintained in the boric acid storage tanks or 106,000 gallons of 2400-2600 ppm borated water be maintained in the RWST.

The gallons given above are the amounts that need to be maintained in the tank in the various circumstances. To get the specified indicated levels used for surveillance testing, each value had added to it an allowance for the unusable volume of water in the tank, allowances for other identified needs, and an allowance for possible instrument error. In addition, for human factors purposes, the percent indicated levels were then raised to either the next whole percent or the next even percent and the gallon figures rounded off. This makes the LCO values conservative to the analyzed values.

The limits on contained water volume and boron concentration of the RWST also ensure a pH value of between 8.5 and 11.0 for the solution recirculated within containment after a LOCA. This pH band minimizes the evolution of iodine and minimizes the effect of chloride and caustic stress corrosion on mechanical systems and components.

The BAT minimum temperature of 65°F ensures that boron solubility is maintained for concentrations of at least the 7750 ppm limit. The RWST minimum temperature is consistent with the STS value and is based upon other considerations since solubility is not an issue at the specified concentration levels. The RWST high temperature was selected to be consistent with analytical assumptions for containment heat load.

The OPERABILITY of one Boron Injection System during REFUELING ensures that this system is available for reactivity control while in MODE 6.

3/4.1.3 MOVABLE CONTROL ASSEMBLIES

The specifications of this section ensure that: (1) acceptable power distribution limits are maintained, (2) the minimum SHUTDOWN MARGIN is maintained, and (3) the potential effects of rod misalignment on associated accident analyses are limited. OPERABILITY of the control rod position indicators is required to determine control rod positions and thereby ensure compliance with the control rod alignment and insertion limits.

MOVABLE CONTROL ASSEMBLIES (Continued)

The intent of Technical Specification 3.1.3.1 ACTION statement "a" is to ensure, before leaving ACTION statement "a" and utilizing ACTION statement "c," that the rod urgent Failure alarm is illuminated or that an obvious electrical problem in the rod control system is detected by minimal electrical troubleshooting techniques. Expeditious action will be taken to determine if rod immovability is caused by an electrical problem in the rod control system.

The ACTION statements which permit limited variations from the basic requirements are accompanied by additional restrictions which ensure that the original design criteria are met. Misalignment of a rod requires measurement of peaking factors and a restriction in THERMAL POWER. These restrictions provide assurance of fuel rod integrity during continued operation. In addition, those safety analyses affected by a misaligned rod are reevaluated to confirm that the results remain valid during future operation.

The maximum rod drop time restriction is consistent with the assumed rod drop time used in the safety analyses. Measurement with T_{avg} greater than or equal to 551°F and with all reactor coolant pumps operating ensures that the measured drop times will be representative of insertion times experienced during a Reactor trip at operating conditions.

Control rod positions and OPERABILITY of the rod position indicators are required to be verified on a nominal basis of once per 12 hours with more frequent verifications required if an automatic monitoring channel is inoperable. These verification frequencies are adequate for assuring that the applicable LCOs are satisfied.

11. DESCRIBE how the Rod Control System is used in the response to, and mitigation of, events as described in the applicable AOPs and EOPs, including AO local actions to: **AO**
    a. Determine which Rod Control cabinet is causing a rod control urgent or nonurgent alarm
    b. Check for blown fuse indicators in a power cabinet
    c. Obtain control bank position from, and resetting, the P-A converter
    d. Operate the lift coil disconnect switches
    e. Reset the master cycler
    f. Shutdown the Rod Drive MGs

12. Given a set of plant conditions, PREDICT the response of the RODCS and the effects on overall plant operations for major component failures/malfunctions, including:
    a. Loop Tavg channel failure
    b. Turbine first-stage impulse pressure channel failure
    c. Power range NI channel failure

13. STATE the Limiting Condition of Operation (not including the Actions) for the following Technical Specifications as they relate to the RODCS.
    a. 3.1.3.1, Movable Control Assemblies, Group Height
    b. 3.1.3.4, Rod Drop Time
    c. 3.1.3.5, Shutdown Rod Insertion Limit
    d. 3.1.3.6, Control Rod Insertion Limits

14. IDENTIFY entry conditions and required actions for the RODCS Technical Specifications that require actions to be taken in one hour or less.

15. Given a copy of the appropriate section of the Technical Specifications, properly APPLY the following Technical Specification and their bases (SRO only) to a given plant condition.
    a. 3.1.3.1, Movable Control Assemblies, Group Height
    b. 3.1.3.4, Rod Drop Time
    c. 3.1.3.5, Shutdown Rod Insertion Limit
    d. 3.1.3.6, Control Rod Insertion Limits

Given the following:

- The unit is at 46% power.
- "C" RCP bearing temperatures have been rising.
- Thrust bearing temperatures are approximately 195 degrees F.
- Pump Radial Bearing temperature is approximately 210 degrees F.
- Motor Radial Bearing temperature is approximately 200 degrees F.
- Motor Stator temperature is approximately 260 degrees F.
- "A" and "B" RCP bearing temperatures are stable.
- The RO determines that CCW flow to RCP "C" was lost.

Which ONE (1) of the following describes the action required?

A. Enter AOP-014, Loss of Component Cooling Water; the technical specification action statement entered due to loss of the RCP will be exited as soon as the unit is less than 5% power.

B. Enter AOP-014, Loss of Component Cooling Water; the technical specification action statement entered due to loss of the RCP will be exited when the reactor is in Mode 3.

C. Enter AOP-018, Reactor Coolant Pump Abnormal Conditions; the technical specification action statement entered due to loss of the RCP will be exited as soon as the unit is less than 5% power.

D. Enter AOP-018, Reactor Coolant Pump Abnormal Conditions; the technical specification action statement entered due to loss of the RCP will be exited when the reactor is in Mode 3.

D is correct. AOP-018 is correct because the effect is on 1 RCP, not all RCPs. Action is to trip the affected RCP because motor bearing temperature exceeds the limit for RCP operation. TS applicability for RCP operation is Mode 1 and 2, so when the unit is in Mode 3, TS action for the tripped RCP no longer applies.

Less than 5% power would signify Mode 2 entry, therefore plausible.

AOP-014 would be correct if all RCPs were affected or if there was a CCW leak. TS action is no longer required when trip breakers are open, because only 2 loops will be required.

Question Number: 86

Tier 2 Group 1

Importance Rating: SRO 3.9

Technical Reference: AOP-018, TS 3.4.1.1, 3.4.1.2
Proposed references to be provided to applicants during examination: None
Learning Objective: LPAOP3-18, Obj 1 and 3
10 CFR Part 55 Content: 43.5, 43.2

Comments:

10CFR55.43(b) item 5 because the SRO must assess plant conditions and choose an appropriate procedure. 10CFR55.43(b) item 2 because knowledge of technical specifications is also being applied

003 A202
SRO 86

1.0 PURPOSE

Provides instructions to protect the RCPs after a component failure or support system malfunction.

OSI-PI Guidance

When OSI-PI displays, mimics, trends, and/or spreadsheets are used, the following guidance applies (reference CSP-NGGC-0004 for details):

- Quality Level D – B is included in the file name and/or display of OSI-PI functions.

  Example: HNP_SWQL_D_POM_AOP-018.xls is Quality Level D.
- Qualified OSI-PI functions may be used alone to support specified requirements.
- Non-Qualified OSI-PI functions shall only be used along with diverse indication.
- Qualified OSI-PI functions should be accessed using Start → Progress Energy PI Displays → Harris Qualified button. (This feature is under development and should always be used when the function is available.)
- If the desired OSI-PI function is not available using the Harris Qualified button, it can be accessed by the following methods (Quality Level indicated as described above):
  - Start → Progress Energy PI Displays → NGG Plant Status → HNP Plant Status → HNP POM Group Trends
  - Start → Programs → Business Apps → HNP → HNP POM Group Trends

2.0 ENTRY CONDITIONS

Any indications associated with the following RCP abnormal conditions:

- Loss of CCW and/or Seal Injection to RCP(s)
- High RCP vibration
- RCP seal malfunctions
- RCP motor trouble

003 A202 s RO 86

Attachment 1

Sheet 1 of 2

Reactor Coolant Pump Trip Limits

NOTE

False indications such as step changes or spikes on both the upper and lower thrust bearings are signs that the instrumentation transient may not be valid.

Validation of the temperatures should be performed by observing positive indications of any of the following:

- Simultaneous temperature increases in upper and lower thrust bearing and upper guide bearing (may indicate loss of CCW cooling or oil viscosity problems common to the upper reservoir)
- Vibration levels increasing along with increasing bearing temperatures.
- High or low RCP oil level alarms along with increasing bearing temperatures.

☐**1.** ANY of the following Motor Bearing temperatures exceeding 190°F: **[A.1]**

	ERFIS Points		
	RCP A	RCP B	RCP C
Mtr Upper Thrust Brg Temp	TRC0417A	TRC0427A	TRC0437A
Mtr Lower Thrust Brg Temp	TRC0417B	TRC0427B	TRC0437B
Mtr Upper Radial Brg Temp	TRC0418A	TRC0428A	TRC0438A
Mtr Lower Radial Brg Temp	TRC0419	TRC0429	TRC0439

☐**2.** ANY of the following Pump temperatures exceeding 230°F: **[A.1]**

	ERFIS Points		
	RCP A	RCP B	RCP C
Pump Radial Brg Temp	TRC0131	TRC0128	TRC0125
Seal Water Inlet Temp	TRC0132	TRC0129	TRC0126

☐**3.** RCP Stator Winding temperature exceeding 300°F:

	ERFIS Points		
	RCP A	RCP B	RCP C
Motor Stator Windg Temp	TRC0418B	TRC0428B	TRC0438B

003 A202
SR086

3/4.4 REACTOR COOLANT SYSTEM

3/4.4.1 REACTOR COOLANT LOOPS AND COOLANT CIRCULATION

STARTUP AND POWER OPERATION

LIMITING CONDITION FOR OPERATION

3.4.1.1 All reactor coolant loops shall be in operation.

APPLICABILITY: MODES 1 and 2.*

ACTION:

With less than the above required reactor coolant loops in operation, be in at least HOT STANDBY within 6 hours.

SURVEILLANCE REQUIREMENTS

4.4.1.1 The above required reactor coolant loops shall be verified in operation and circulating reactor coolant at least once per 12 hours.

*See Special Test Exceptions Specification 3.10.4.

603A2.02
SR086

HOT STANDBY

LIMITING CONDITION FOR OPERATION

3.4.1.2 At least two of the reactor coolant loops listed below shall be OPERABLE with two reactor coolant pumps in operation when the Reactor Trip System breakers are closed or with one reactor coolant pump in operation when the Reactor Trip System breakers are open:*

a. Reactor Coolant Loop A and its associated steam generator and reactor coolant pump.

b. Reactor Coolant Loop B and its associated steam generator and reactor coolant pump.

c. Reactor Coolant Loop C and its associated steam generator and reactor coolant pump.

APPLICABILITY: MODE 3.

ACTION:

a. With less than the above required reactor coolant loops OPERABLE, restore the required loops to OPERABLE status within 72 hours or be in HOT SHUTDOWN within the next 12 hours.

b. With only one reactor coolant loop in operation and the Reactor Trip System breakers in the closed position, within 1 hour open the Reactor Trip System breakers.

c. With no reactor coolant loop in operation, immediately open the Reactor Trip System breakers, suspend all operations involving a reduction in boron concentration of the Reactor Coolant System and immediately initiate corrective action to return the required reactor coolant loop to operation.

SURVEILLANCE REQUIREMENTS

4.4.1.2.1 At least the above required reactor coolant pumps, if not in operation, shall be determined OPERABLE once per 7 days by verifying correct breaker alignments and indicated power availability.

*All reactor coolant pumps may be deenergized for up to 1 hour provided: (1) no operations are permitted that would cause dilution of the Reactor Coolant System boron concentration, and (2) core outlet temperature is maintained at least 10°F below saturation temperature.

I INTRODUCTION

Lesson Objectives TP

A. Lesson objectives

Upon completion of this lesson, the student should be able to

1. IDENTIFY conditions that require entry into AOP-018
2. LIST the immediate actions required by AOP-018.
3. Given a set of plant conditions and a copy of AOP-018, DETERMINE the appropriate response
4. DISCUSS the difficulties that may be encountered restoring CCW return flow from RCP thermal barriers after a total loss of seal cooling per AOP-018

B. Reason for study

In order for the operator to safely operate the plant, a good working knowledge of the Abnormal Operating Procedures is required. The operator must know what to do in abnormal conditions to be able to return the plant to a normal operating configuration.

II PRESENTATION

A. Overview

1. AOP-018, Reactor Coolant Pump Abnormal Conditions
   a. Loss of CCW and/or Seal Injection to RCP(s)
   b. High RCP vibration
   c. RCP Seal Malfunctions
   d. RCP motor trouble
2. Industry events
3. Summary
4. Evaluation review

1.0 PURPOSE

The Component Cooling Water System provides cooling to essential equipment and equipment on the non-essential loop. This procedure provides direction for recovery from the following:

- leakage into the system
- leakage from the system
- loss of a pump

OSI-PI Guidance

When OSI-PI displays, mimics, trends, and/or spreadsheets are used, the following guidance applies (reference CSP-NGGC-0004 for details):

- Quality Level D – B is included in the file name and/or display of OSI-PI functions.

  Example: HNP_SWQL_D_POM_AOP-018.xls is Quality Level D.
- Qualified OSI-PI functions may be used alone to support specified requirements.
- Non-Qualified OSI-PI functions shall only be used along with diverse indication.
- Qualified OSI-PI functions should be accessed using Start → Progress Energy PI Displays → Harris Qualified button. (This feature is under development and should always be used when the function is available.)
- If the desired OSI-PI function is not available using the Harris Qualified button, it can be accessed by the following methods (Quality Level indicated as described above):
  - Start → Progress Energy PI Displays → NGG Plant Status → HNP Plant Status → HNP POM Group Trends
  - Start → Programs → Business Apps → HNP → HNP POM Group Trends

2.0 ENTRY CONDITIONS

DO NOT MEET

2.1 CCW Radiation monitor alarm on RM-11 console.

2.2 CCW Surge Tank level rising or lowering.

2.3 Notification to Control Room of CCW leak.

2.4 Low CCW pump discharge header pressure.

2.5 Standby CCW pump started due to failure of the in-service CCW pump.

2.6 Indication of intersystem leakage:

- VCT
- RCP oil coolers
- RCDT

Given the following:

- The Unit is in Mode 3.
- The crew is preparing to start "A" RCP.
- The "A" RCP Oil Lift Pump is started.
- Seal Injection flow is 7.8 GPM.
- Subsequently, "A" RCP control switch is placed in START.
- "A" RCP does NOT start.

Which ONE (1) of the following describes the interlock preventing "A" RCP from starting?

A. Seal Injection flow is below the minimum required.

B. The time delay is not satisfied after starting the Oil Lift Pump.

C✓ Oil Lift Pressure is below the required setpoint.

D. Oil Reservoir level is below the minimum required.

C is correct. Oil pressure must be greater than 600 psig. (Indication not available in CR)
A is incorrect but plausible because an RCP should not be started unless seal injection flow is >8 GPM.
B is incorrect but plausible because there is a 1 minute time period that requires RCP operation prior to stopping the Lift Oil Pump.
D is incorrect but plausible because the oil level should be >-1.25 inches to start the RCP, although not an interlock
Knowledge of RCPS design feature(s) and/or interlock(s) which provide for the following: Adequate lubrication of the RCP

Question Number: 1

Tier 2 Group 1

Importance Rating: RO 2.8

Technical Reference: RCS Student Text Pg 32-33
Proposed references to be provided to applicants during examination: None
Learning Objective: RCS Text Obj 6 and 8
10 CFR Part 55 Content: 41

Comments:

003 K403
R0 1

Figure 12 RCS Pump Diagram

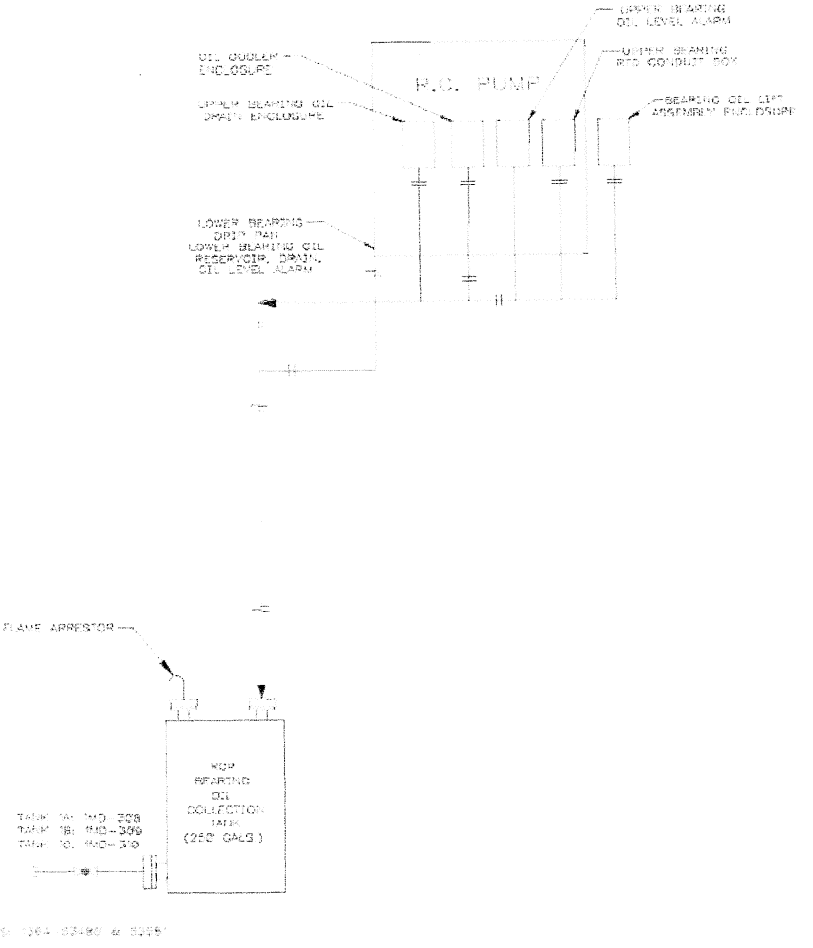

REACTOR COOLANT PUMP OPERATION

Certain conditions must be met prior to starting an RCP. These include:

- RCS pressure greater than 325 psig, to provide adequate NPSH.
- No. 1 seal Delta P greater than 200 psid.
- Seal injection flow greater than 8-13 gpm at a temperature between 60°F and 130°F.
- No. 1 seal leakoff flow between 0.2 gpm and 1.0 gpm.
- RCP standpipe at normal operating level.
- Volume Control Tank pressure greater than 15 psig, to ensure some flow up past the #2 seal.

- RCP oil levels at normal operating level.
- CCW flow to thermal barrier, upper oil cooler and lower oil cooler is within specifications.

Only one RCP is started at any one time. Two successive starts are permitted, provided the motor is allowed to coast to a stop between starts. A third start may be made when the winding and the core have cooled by running for a period of 20 minutes, or by standing idle for a period of 45 minutes.

RCP Oil Lift System

To initiate start-up of the RCPs, the oil lift system must be operated to reduce starting torque. The pressure of the oil lifts the thrust bearing shoes away from the thrust runner and provides an oil film for the bearing.

A permissive interlock in the RCP starting circuit will not allow the RCP motor to be started until the oil lift pressure reaches a preset value (600 psig) as sensed by pressure switches PS-417, PS-427 and PS-437 on RCP 1A, 1B and 1C, respectively. The maximum oil lift system pressure is limited to 1200 psig by a relief valve.

Administrative procedures require the lift pumps to operate for two minutes prior to starting the RCP. After the RCP has been in operation for one minute, the lift pump may be stopped. The lift pump is not required for normal RCP operation or for stopping the RCP.

A viscosity pump at the outer periphery of the thrust bearing runner (ported area through the bearing runner) circulates oil through an external oil-to-water heat exchanger (oil cooler) to cool the upper bearing and provides oil to the bearing pads. The lower radial bearing is located below the motor rotor core and is fed by the viscosity pump.

RCP Vibration Monitors

The RCP vibration monitors YT-419, YT-429 and YT-439 are used for main control room indication and will alarm on the MCB to alert the operator. These monitors provide sensing of shaft and frame vibrations and may be used for in-place pump balancing. The RCP breaker will trip open on a locked rotor as sensed by the locked rotor monitors.

RCP Seal System

During normal operation, high pressure injection water from the CVCS enters the pump through a connection on the thermal barrier flange at a rate of approximately 8 gpm. About 5 gpm of this injection water flows down through the thermal barrier heat exchanger into the primary system. This downward flow prevents reactor coolant from entering the seal area of the pump. The remaining 3 gpm enters the No. 1 seal. After exiting the No. 1 seal, approximately 3 gph of this water will pass through the No. 2 seal for lubrication and cooling. The remainder of this water is

003K.4.03
R01

Student Objectives

1. STATE the purposes of the Reactor Coolant System (RCS).

2. STATE the function, design bases, and power supplies of the following major RCS components:
   a. Reactor coolant pump (RCP) Seal Assembly
   b. RCP hydraulic section (including casing, impeller, turning vane diffuser, diffuser adapter, thermal barrier, radial bearing assembly.)
   c. RCP motor section (including stator, rotor, lower guide bearing, upper bearing assembly, anti-reverse rotation device, flywheel, oil lift system, shaft and coupling)

3. DISCUSS relevant industry operating experience (OE) including:
   a. SOER 02-4, Reactor Pressure Vessel Head Degradation at Davis-Besse Nuclear Power Station (3/02)
   b. NRC Information Notice 86-108, Supplement 3: Degradation Of RCS Pressure Boundary Resulting From Boric Acid Corrosion

4. DESCRIBE the RCS normal operation, including operation sequence and normal parameters, and expected system response.

5. DESCRIBE the modes of operations and major flowpaths of the RCS in accordance with plant operating procedures, including the following:
   a. Flow through the reactor
   b. Flow through RCP seals (and nominal flow rates)
   c. Flow through RCP hydraulic section

6. STATE the major precautions and limitations from OP-100 including the following:
   a. Normal RCP startup
   b. RCP operation during emergency conditions
   c. RCP shutdown

003 K 4.03
RO 1

7. IDENTIFY associated remote and local instrumentation, indications, alarms, and controls for the RCS.

8. STATE the interlocks, permissives, and automatic control functions (and the basis for each) of the RCS and the following subsystems:
   d. Vibration monitoring
   e. Reactor coolant lift pumps
   f. RCP locked rotor protection
   g. RCS flow detection

9. Given a set of plant conditions, PREDICT the response of the RCS and the effect on overall plant conditions with regard to automatic control functions, signals, and interlocks.

10. DESCRIBE the interrelationships (physical connections, design functions, flow paths) between the RCS and other plant systems, including all penetrations into the RCS and their location (including relationship to pipe centerline).

11. DESCRIBE how the RCS is used in the response to, and mitigation of, events as described in the applicable AOP's and EOP's.

12. Given a set of plant conditions, PREDICT the response of the RCS and the effects on overall plant operations for major component failures/ malfunctions such as:
    a. Locked RCP rotor

13. STATE the limiting condition of operation (not including the Actions) for the following Technical Specifications as they relate to the RCS.
    3/4.4.1 Reactor Coolant Loops and Loop Circulation
    3.4.1.1 Start-up and Power Operation
    3.4.1.2 Hot Standby (1 hr. or less action)
    3.4.1.3 Hot Shutdown (1 hr. or less action)
    3.4.1.4.1 Cold Shutdown—Loops Filled (1 hr. or less action)
    3.4.1.4.2 Cold Shutdown—Loops Not Filled (1 hr. or less action)
    3/4.4.2 Safety Valves
    3.4.2.1 Shutdown (1 hr. or less action)
    3.4.2.2 Operating (1 hr. or less action)

4. 003 K6.14 001/NEW//LOWER//RO/HARRIS/7/2007/NO

Given the following:

- The unit is in Mode 4.
- Preparations are underway to start "A" RCP.

Which ONE (1) of the following conditions, if it existed at time of RCP start, may result in damage to "A" RCP?

A. RCS pressure is 330 psig

B. VCT pressure is 11 psig

C. RCP #1 seal leakoff flow is 0.5 gpm

D. RCP #1 seal Delta P is 210 psid

D is correct. VCT pressure must be 15 psig to ensure flow past the #2 seal.
A is incorrect but plausible because it represents a presure very close to the minimum requirement for NPSH (325 psig)
C is incorrect but plausible because seal leakoff is low, but not low enough (0.2 gpm) to cause damage to seals upon start
D is incorrect but plausible because #1 seal DP is low but within the limits required (>200 psid) to ensure normal seal operation on RCP start
Knowledge of the effect of a loss or malfunction on the following will have on the RCPS: Starting requirements

Question Number: 2

Tier 2 Group 1

Importance Rating: RO 2.6
Technical Reference: RCS text pg 24, OP-100, 4.0.5 and section 5.1
Proposed references to be provided to applicants during examination: None
Learning Objective: RCS text Obj. 6
10 CFR Part 55 Content: 41

Comments:

Figure 12 RCS Pump Diagram

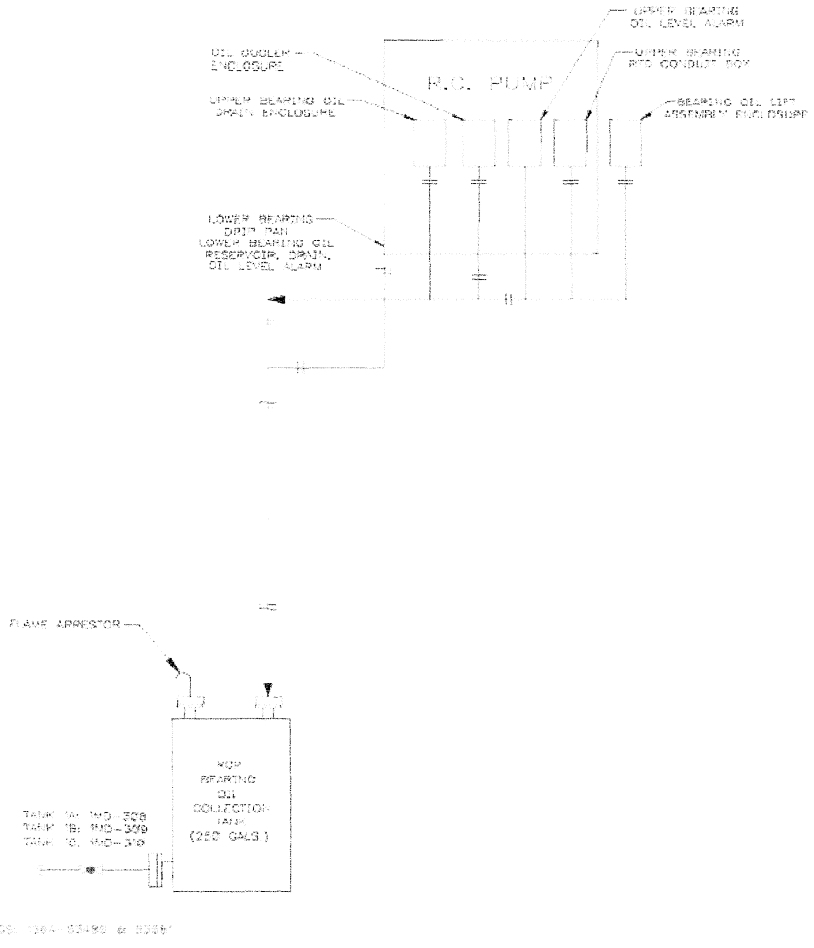

REACTOR COOLANT PUMP OPERATION

Certain conditions must be met prior to starting an RCP. These include:

- RCS pressure greater than 325 psig, to provide adequate NPSH.
- No. 1 seal Delta P greater than 200 psid.
- Seal injection flow greater than 8-13 gpm at a temperature between 60°F and 130°F.
- No. 1 seal leakoff flow between 0.2 gpm and 1.0 gpm.
- RCP standpipe at normal operating level.
- Volume Control Tank pressure greater than 15 psig, to ensure some flow up past the #2 seal.

003K6.14
R02

Student Objectives

1. STATE the purposes of the Reactor Coolant System (RCS).

2. STATE the function, design bases, and power supplies of the following major RCS components:
   a. Reactor coolant pump (RCP) Seal Assembly
   b. RCP hydraulic section (including casing, impeller, turning vane diffuser, diffuser adapter, thermal barrier, radial bearing assembly.)
   c. RCP motor section (including stator, rotor, lower guide bearing, upper bearing assembly, anti-reverse rotation device, flywheel, oil lift system, shaft and coupling)

3. DISCUSS relevant industry operating experience (OE) including:
   a. SOER 02-4, Reactor Pressure Vessel Head Degradation at Davis-Besse Nuclear Power Station (3/02)
   b. NRC Information Notice 86-108, Supplement 3: Degradation Of RCS Pressure Boundary Resulting From Boric Acid Corrosion

4. DESCRIBE the RCS normal operation, including operation sequence and normal parameters, and expected system response.

5. DESCRIBE the modes of operations and major flowpaths of the RCS in accordance with plant operating procedures, including the following:
   a. Flow through the reactor
   b. Flow through RCP seals (and nominal flow rates)
   c. Flow through RCP hydraulic section

6. STATE the major precautions and limitations from OP-100 including the following:
   a. Normal RCP startup
   b. RCP operation during emergency conditions
   c. RCP shutdown

3.0 PREREQUISITES

1. **VERIFY** the following systems are aligned to support operation of the Reactor Coolant System and its components:

   - Primary Sample System per OP-101
   - Primary Make-up System per OP-102
   - Chemical and Volume Control System per OP-107
   - Radioactive Equipment Drain System per OP-120.08
   - Component Cooling Water System per OP-145
   - Instrument Air System per OP-151.01
   - Compressed Gas System Nitrogen per OP-152.01
   - DC Electrical Distribution per OP-156.01
   - AC Electrical Distribution per OP-156.02
   - RCP Vibration Monitor

4.0 PRECAUTIONS AND LIMITATIONS

1. Start only one RCP at a time.

2. Apply the following starting duty for the RCPs:

   - If the motor is allowed to coast to a stop between starts, two successive starts are permitted.
   - A third start is permitted when the winding and the core have cooled by running for a period of 20 minutes, OR by standing idle for a period of 45 minutes.

3. CCW flow through the thermal barrier heat exchanger should be supplied at all times when RCS temperature exceeds 200˚ F.

4. The temperature of CCW supplied to components should not exceed 105°F during normal operation. During the transition to Residual Heat Removal cooling in service, the temperature may increase to 125°F.

5. Volume Control Tank pressure should be maintained greater than 15 psig to insure sufficient cooling water is supplied to # 2 RCP Seal.

6. RCP seal injection temperature should be limited to a maximum of 135°F. For special operation, RCP seal injection temperature may be increased to a maximum of 150°F provided RCS temperature is maintained less than 400°F.

003K6.14
R02

5.0 STARTUP

5.1. Reactor Coolant Pump Start-up

5.1.1. Initial Conditions

1. The RCS is filled and vented per GP-001 OR initial pump start per GP-001. _____
2. Attachment 1 is complete. _____
3. Attachment 2 is complete. _____
4. # 1 Seal Leakoff Flow is in the normal operating range of Attachment 3. (Reference 2.5.1) _____
5. Reactor power is less than 25%. [R - Reference FSAR 15.4.4] _____
6. If starting RCPs for RCS fill and vent per GP-001, RCS pressure is greater than 325 psig. [R - Reference FSAR 4.4.3] _____
7. # 1 Seal ΔP is greater than 200 psid. [R - Reference FSAR 4.4.3] _____
8. Seal injection flow is 8 to 13 gpm. [R - Reference FSAR 4.4.3] _____
9. VCT temperature is between 60 and 130°F. _____
10. VCT pressure is greater than 15 psig. _____
11. No RCP related annunciators are in alarm which could adversely affect RCP operation. (Reference ERFIS GD AOP-018, Locked Rotor Monitor) _____

003K6.14
R02

5.1.2. Procedure Steps

CAUTION

Only one RCP is to be started at any one time. If the motor is allowed to coast to a stop between starts, two successive starts are permitted. A third start may be made when the winding and the core have cooled by running for 20 minutes, or by standing idle for 45 minutes.

1. **VERIFY** the following before pump start:

   a. **IF** jogging RCPs per GP-001,
   THEN VERIFY RCS Pressure is greater than 325 psig.
   (Otherwise this Step is N/A) [R - Reference FSAR 4.4.3] _____

   b. **VERIFY** # 1 Seal ΔP is greater than 200 psid. _____

NOTE: VCT Outlet Temp TE-116 should be used for seal injection water temperature.

   c. **VERIFY** Seal Injection flow is between 8 and 13 gpm at a temperature between 60 and 130°F. [R - Reference FSAR 4.4.3] _____

   d. **VERIFY** # 1 Seal Leakoff is in the normal operating range of Attachment 3. _____

CAUTION

RCPs shall not be started with one or more of the RCS cold leg temperatures less than or equal to 325°F unless the secondary water temperature is less than 50°F above each of the RCS cold leg temperatures. This caution is only applicable to the first RCP to be started.

2. **START** the RCP Oil Lift Pump. _____

3. **VERIFY** the amber permissive light on the lift pump control switch is lit indicating proper lift oil pressure has been achieved. _____

4. **ALLOW** the RCP Oil Lift Pump to run for a minimum of 2 minutes before starting an RCP. _____

063K6.14
R02

5.1.2 Procedure Steps (continued)

NOTE:	When an RCP is started, the RCP ammeter will go off scale high, and then decrease to the normal hot or cold running amps after 15 to 25 seconds.

5. **START** the RCP. _____

6. **VERIFY** the following normal operating parameters:

• Running amps:	Hot 460 to 540 amps Cold 715 amps	_____
• RCS flow:	Greater than or equal to 98%	_____
• # 1 Seal ΔP	Greater than 200 psid.	_____
• # 1 Seal leakoff	In the normal operating range of Attachment 3.	_____
• Motor Winding temperature:	Less than 300°F	_____

NOTE:	The oil lift pump should be run at least 1 minute after starting an RCP.

7. After at least 1 minute, **STOP** the RCP OIL LIFT PUMP. _____

8. **COMPLETE** Section 5.1.3. _____

003K6.14
R02

1 Seal Performance Parameters

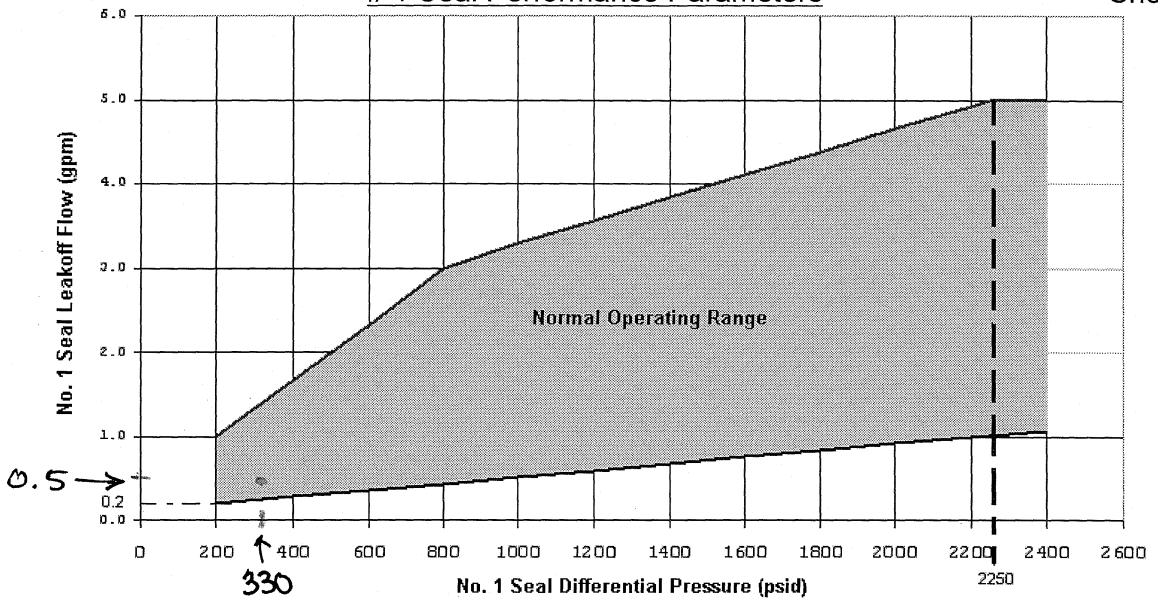

Drawing Reference VM-MRF, Section 4 Product Update S-009, Mar 1988

Plant Startup/Shutdown	Normal Range	Minimum	Maximum	Notes
FLOW (GPM)	N/A	0.2	N/A	a, b, c, d
Δ P	N/A	200	N/A	a, b, c
Continuous Operation	**Normal Range**	**Minimum**	**Maximum**	**Notes**
FLOW (GPM)	1.0 TO 5.0	0.8	6.5	a, d, e, f
Δ P	2250	2150	2300	N/A

NOTES

a. Inform Responsible Engineer (RCP) to evaluate the operating and troubleshooting guidelines in the RCP Technical manual for leak rates outside the specified values. (Reference 2.5.1)

b. Minimum RCP startup requirements are 0.2 gpm at a ΔP of 200 psi. If 0.2 gpm at 200 psi is not met then inform Responsible Engineer (RCP) and refer to Section 8.13 for guidance.

c. For start-up at ΔPs greater than 200 psi, the minimum # 1 seal leakoff is determined from the # 1 Seal Normal Operating Range curve. For example, at a ΔP of 1000 psi the minimum seal leakrate is 0.5 gpm.

d. High flow alarm setpoint is 6.5 gpm per PCR-2249.

e. If the # 1 Seal leakoffs are outside the Normal Operating Range (1.0 to 5.0 gpm) but within the Normal Operating Limits (0.8 to 6.5 gpm) continue pump operation. Ensure that seal injection flow exceeds # 1 Seal leakoff for the affected RCP. Closely monitor pump and seal parameters and contact Responsible Engineer (RCP) for further instructions. Westinghouse may need to be consulted.

f. For # 1 Seal leakoffs outside the Normal Operating Limits (0.8 to 6.5 gpm) for Continuous Operation go to AOP-018.

g. RCP operation (beyond one hour) during a Loss of Seal Injection with the No. 1 Seal leaking less than 2.5 GPM and CCW at minimum flow (35 GPM) and maximum temperature (105°F), may result in pump bearing and seal water inlet temperatures exceeding the maximum normal operating temperature (220°F). Closely monitor the pump bearing and seal water inlet temperatures of RCPs with No. 1 seal leak-off below 2.5 GPM. Expedited cooling of the RCS may prevent exceeding the maximum temperature (220°F).

The Unit is in Mode 2.

Pressurizer Level Control is selected to position 459/460.

Which ONE (1) of the following contains BOTH failures that will require MANUAL control of pressurizer level in accordance with AOP-024, Loss of Uninterruptible Power Supply?

Loss of Instrument Busses...

A. SI and SII

B. SI and SIII

C. SII and SIII

D. SII and SIV

A is correct. With PZR Level control in 459/460 position, loss of either SI or SII will result in manual control of PZR level.
B, C, and D are plausible because all of the Instrument Busses could be considered for power supply to the control system, and each of the Instrument Busses supplies different equipment controls. This is a lower cognitive level test item requiring memory of power supplies

Direct from AOP-024
Knowledge of bus power supplies to the following: Control instrumentation

Question Number: 3

Tier 2 Group 1

Importance Rating: RO 2.6

Technical Reference: AOP-024
Proposed references to be provided to applicants during examination: None
Learning Objective: AOP-LP3-24, Obj 5
10 CFR Part 55 Content: 41.7

Comments:

INSTRUCTIONS	RESPONSE NOT OBTAINED

3.0 OPERATOR ACTIONS

NOTE

Steps 1 and 2 are immediate actions.

☐ **1. PLACE** Rod Control in MANUAL.

☐ **2. CHECK** Instrument Bus SIII ENERGIZED.

2. PERFORM the following:

☐ **a. PLACE** Main FW Regulator Valves in MANUAL.

☐ **b. VERIFY** Main FW Regulator Bypass Valves in MANUAL.

☐ **c. CONTROL** SG levels between 52% and 62%.

NOTE

Loss of electrical power may require initiation of the SHNPP Emergency Plan. **[C.1 & 2]**

☐ **3. REFER TO** PEP-110, Emergency Classification and Protective Action Recommendations, AND **ENTER** the EAL Network at entry point X.

R03 004 K2.06

INSTRUCTIONS	RESPONSE NOT OBTAINED

3.0 OPERATOR ACTIONS

☐4. **DETERMINE** the affected bus, AND **GO TO** the appropriate section as identified in the table below:

Bus	Section	Page
SI	3.1, Loss of Instrument Bus	6
SII	3.1, Loss of Instrument Bus	6
SIII	3.1, Loss of Instrument Bus	6
SIV	3.1, Loss of Instrument Bus	6
UPP-1	3.2, Loss of 60 KVA NNS UPS Bus UPP-1	15
UPP-1B	3.3, Loss of 7.5 KVA NNS UPS Bus UPP-1B	19
UPP-1A	3.4, Loss of 60 KVA NNS UPS Bus UPP-1A	21

--END OF SECTION 3.0 --

INSTRUCTIONS	RESPONSE NOT OBTAINED

3.1 Loss of Instrument Bus

1. **PERFORM** the following:

☐ a. **PLACE** the affected NI Rod Stop Bypass switch to BYPASS at the Detector Current Comparator Drawer.

☐ b. **RESTORE** Tavg as necessary.

☐2. **CHECK** the plant in Modes 1 through 4.

2. **SUSPEND** ALL operations that involve the following activities:

☐ • Core alterations

☐ • Positive reactivity additions

☐ • Movement of irradiated fuel

NOTE
SG PORVs may be controlled locally if needed.

☐3. **Manually CONTROL** the following based on the Instrument Bus lost:

PARAMETER	Instrument Bus Lost			
	SI	**SII**	**SIII**	**SIV**
Rod Control	x	x	x	x
PRZ level	x	x		
PRZ Master Pressure Controller	x	x		
PRZ heaters and sprays	x	x		
A SG PORV	x			
B SG PORV		x		
C SG PORV			x	
Main FW Reg Valves			x	
Main FW Reg Bypass Valves			x	

R03 004K2.06

INSTRUCTIONS	RESPONSE NOT OBTAINED

3.1 Loss of Instrument Bus

4. GO TO the applicable step based on the Instrument Bus lost:

	Bus	Step
☐	SI	5
☐	SII	6
☐	SIII	7
☐	SIV	8

5. PERFORM the following (Bus SI):

☐ **a. PLACE** PRZ Level Controller Selector switch to CHAN 460/461.

☐ **b. GO TO** Step 8.

6. PERFORM the following (Bus SII):

☐ **a. PLACE** PRZ Level Controller Selector switch to CHAN 459/461.

NOTE

If power is lost to instrument bus SII (B Train), the associated ESW header pressure instrument will read low and the ESW Pump will start on sensed low pressure. ESW Screen Wash will be inoperable due to loss of the ESW Screen Wash Pump discharge header pressure permissive for starting the screen, causing the associated EDG to be inoperable. Tech Specs 3.7.4 and 3.8.1.1 will apply.

☐ **b. REFER TO** the following Tech Specs:

- 3.7.4, Emergency Service Water
- 3.8.1.1, AC Sources - Operating

(Continued on Next Page)

Given the following:

- The RCS is in solid plant operation.
- "A" CSIP is in service.
- "A" train RHR is in service providing both core cooling and low pressure letdown.
- Letdown Line Pressure Control valve PCV-145, (1CS-38) is in AUTO.
- Charging Flow Control valve FCV-122 is being operated with its controller in MANUAL.

Which ONE (1) of the following events or conditions will raise RCS pressure?

A. FK-122.A1, Charging Flow Controller (1CS-231), is adjusted towards 0% demand.

B. Loss of Instrument Air to Letdown Pressure Control Valve, (1CS-38).

C✓ "A" RHR Pump trips.

D. "A" CSIP trips

C is correct. RHR Pump trip will take away the motive force for Letdown in this circumstance. With Charging in manual, inflow will be greater than outflow, and pressure will rise.

A is incorrect because reducing demand on the charging flow control valve will cause the valve to close, lowering charging flow

B is incorrect because 1CS-38 is a 'fail open' valve, so pressure would be reduced

D is incorrect because loss of a Charging pump would cause pressure to decrease instead of increase, because flow out of the RCS would be higher than flow into the rCS

Knowledge of the operational implications of the following concepts as they apply the RHRS: Plant response during "solid plant": Pressure change due to the relative incompressibility of water

Question Number: 4

Tier 2 Group 1

Importance Rating: RO 2.7

Technical Reference: AOP-019
Proposed references to be provided to applicants during examination: None
Learning Objective: AOPLP3.19 obj 5
10 CFR Part 55 Content: 41.7

Comments:

RO Q.4
005 K.5.03

Section 3.2—Pressure Control Malfunctions During Solid Plant Operation

Step	Description
4	**I: Prior to continuing, adjust PK-145.1 to reduce RCS pressure to minimum.**
	Because the charging pump was stopped in the previous step, pressure should drop. However, depending on the failure (for example, PCV-145 failed closed), some pressure may remain. Since the only pressure concern in this mode of control is overpressurization, this step ensures that RCS pressure is minimized to ensure a pressure margin between LTOP and RHR relief protection.
5	**I: Shut PCV-145 and HCV-142 to isolate letdown.**
	Once the RCS has been depressurized, letdown is stopped to prevent a loss of RCS inventory. Although PCV-145 should shut automatically in response to dropping pressure, a failure of that valve may be the cause of this event. This step ensures that the valve is shut manually if it fails to respond properly in automatic.
6	**I: Maintain RHR temperature stable.**
	Proper RHR function should be unaffected by the pressure control malfunction. However, a portion of RHR pump discharge flow was previously diverted to low pressure letdown, which was stopped in the previous step. This step will prompt the operator to either observe the RHR System respond to maintain current temperature, or to make the necessary adjustments manually. Additionally, the RCS, though depressurized, may still be solid. Because it is isolated, a temperature increase will result in a pressure rise in the system. Maintaining a stable system temperature avoids challenging LTOP.
7	**I: Refer to Tech Spec 3.4.9.4 and implement action where appropriate.**
	Tech Spec 3.4.9.4 deals with LTOP operability, and may be applicable if the cause of the pressure control malfunction is an inoperable PRZ PORV.
C8	**Whenever RCS pressure is below 100 psig with no seal injection water being supplied, seal leak-off valves must be shut. This will prevent the backflow of unfiltered water from the VCT.**
	This Caution is taken from OP-107, Chemical Volume Control System, and sensitizes the operator to the importance of the step.

Given the following:

- A reactor trip and safety injection have occurred.
- The crew is performing actions of EPP-009, Post LOCA Cooldown and Depressurization.
- When the crew stops 1 CSIP and aligns the normal charging flowpath, pressurizer level begins to slowly lower.
- The crew continues in EPP-009, adjusting charging to 150 gpm.

Which ONE (1) of the following describes action performed in EPP-009 if pressurizer level continues to lower?

When PZR level reaches....

A. 25%, actuate Safety Injection.

B. 25%, shut charging line isolation valves, shut normal miniflow isolation valves, open BIT valves.

C. 10%, actuate Safety Injection.

D✓ 10%, shut charging line isolation valves, shut normal miniflow isolation valves, open BIT valves.

D is correct. 10% PZR level, realign BIT, ensure normal miniflow valves closed.

For A and B, 25% is credible because it is the level at which the CSIP may be stopped. B has the correct action, A has the incorrect action. C has the correct setpoint but incorrect action. Actuating SI would be incorrect for the conditions given

Ability to predict and/or monitor changes in parameters (to prevent exceeding design limits) associated with operating the ECCS controls including: Reactor vessel level

Question Number: 5

Tier 2 Group 1

Importance Rating: RO 3.6

Technical Reference: EPP-009
Proposed references to be provided to applicants during examination: None
Learning Objective: LPEOP3-5 Obj 4
10 CFR Part 55 Content: 41.10

Comments:

006 A114
R05

FOLDOUT

- SI REINITIATION CRITERIA

  IF any of the following occurs:

  - RCS subcooling - LESS THAN 10°F [40°F] - C
    20°F [50°F] - M

  - PRZ level - CAN NOT BE MAINTAINED GREATER THAN 10% [30%]

  THEN perform the following:

  a. Shut charging line isolation valves AND open BIT valves.

  b. Verify normal miniflow isolation valves - SHUT

  c. IF necessary to restore conditions, THEN restart standby CSIP.

- SECONDARY INTEGRITY CRITERIA

  IF any of the following occurs, THEN GO TO EPP-014, "FAULTED STEAM GENERATOR ISOLATION", Step 1 (unless faulted SG is needed for RCS cooldown):

  - Any SG pressure - DECREASES IN AN UNCONTROLLED MANNER AND THAT SG HAS NOT BEEN ISOLATED

  - Any SG - COMPLETELY DEPRESSURIZED AND THAT SG HAS NOT BEEN ISOLATED

- PATH-2 TRANSITION CRITERIA

  IF any SG level increases in an uncontrolled manner OR any SG has abnormal radiation levels, THEN GO TO PATH-2, entry point J.

- COLD LEG RECIRCULATION SWITCHOVER CRITERIA

  IF RWST level decreases to less than 23.4% (2/4 Low-Low alarm), THEN GO TO EPP-010, "TRANSFER TO COLD LEG RECIRCULATION", Step 1.

- AFW SUPPLY SWITCHOVER CRITERIA

  IF CST level decreases to less than 10%, THEN switch the AFW water supply to the ESW system using OP-137, "AUXILIARY FEEDWATER SYSTEM", Section 8.1.

- RHR RESTART CRITERIA

  IF RCS pressure decreases to less than 230 PSIG in an uncontrolled manner, THEN restart RHR pumps to supply water to the RCS.

006A1.14
R05

Instructions	Response Not Obtained

NOTE: After stopping one CSIP, RCS pressure should be allowed to stabilize OR increase before checking SI termination criteria.

16. Check SI Reduction Criteria:

a.	Check both CSIPs - RUNNING	a. GO TO Step 17.
b.	Check RCS subcooling based on RCP status: o Any RCP running: RCS subcooling - GREATER THAN 26°F [66°F] - C 40°F [79°F] - M o No RCP running: RCS subcooling - GREATER THAN 35°F [72°F] - C 48°F [84°F] - M	b. GO TO Step 16d.
c.	GO TO Step 16g.	
d.	RCS hot leg temperature - LESS THAN 335°F	d. Observe CAUTION prior to Step 27 AND GO TO Step 27.
e.	Verify at least one RHR pump - RUNNING	e. Observe CAUTION prior to Step 27 AND GO TO Step 27.
f.	Check suction of running RHR pump - ALIGNED TO RWST OR CNMT RECIRC SUMP	f. Observe CAUTION prior to Step 27 AND GO TO Step 27.
g.	PRZ level - GREATER THAN 25% [40%]	g. Observe CAUTION prior to Step 14 AND RETURN TO Step 14.
h.	Stop one CSIP.	

Distractors

006 A 1.14
RO 5

I. INTRODUCTION

A. Lesson objectives

Lesson Objectives

Upon completion of this lesson, the student should be able to

1. DESCRIBE the purpose of the listed EOPs including the type of event for which they were designed.
   a. EPP-009, Post-LOCA Cooldown and Depressurization
   b. EPP-020, SGTR with LOCA, Subcooled Recovery Desired
   c. EPP-021, SGTR with LOCA, Saturated Recovery Desired
2. ARRANGE the major action categories for each of the listed EOPs in the proper sequence
   a. EPP-009, Post-LOCA Cooldown and Depressurization
   b. EPP-020, SGTR with LOCA, Subcooled Recovery Desired
   c. EPP-021, SGTR with LOCA, Saturated Recovery Desired
3. EXPLAIN the below-assumed operator knowledge from the SHNPP Step Deviation Documents and WOG ERGs that support performance of EOP actions
   a. Reason initial cooldown is allowed to continue if boron concentration is not greater than that required for shutdown margin
   b. Three advantages gained by starting an RCP, if none are running, during recovery efforts in EPP-009 and EPP-020
   c. Reasons to conduct depressurization of RCS and terminate SI as quickly as possible after a cooldown has been initiated if an inactive loop(s) exist
4. Given the title of an EOP foldout item, STATE the parameters to be monitored for implementation
5. Given the following EOP steps, notes, and cautions, DESCRIBE the associated basis for
   a. Caution controlling the starting of an RCP that has experienced a complete loss of seal cooling
   b. Items to consider when reducing or terminating SI flow
   c. The establishment of a 100°F/hr cooldown rate limit in EPP-009, EPP-020, and EPP-021

Given the following:

- The unit is at 100% power.
- The following annunciator is received:
  - ALB-009-8-1, PRESSURIZER RELIEF TANK HI-LO- LEVEL PRESS OR TEMP
- PRT pressure is 8 psig and RISING SLOWLY.
- PRT level is 69% and STABLE.
- PRT temperature is 109 degrees F and STABLE.

If allowed to continue, which ONE (1) of the following is the potential impact of this event and the actions required to restore PRT pressure?

The PRT rupture disc will discharge to containment when pressure rises to ___(1)___. To prevent PRT rupture disc operation, the crew will ___(2)___.

A.✓ (1) 100 psig
(2) Vent the PRT.

B. (1) 100 psig
(2) Drain the PRT to the RCDT to reduce level and pressure.

C. (1) 50 psig
(2) Vent the PRT.

D. (1) 50 psig
(2) Drain the PRT to the RCDT to reduce level and pressure.

A is correct. 100 psig rupture, with stable temperature and level, vent the PRT
B is incorrect but plausible because if the High Pressure condition was caused by High Level, this action could be taken. Conditions presented are for normal level of PRT
C and D are incorrect because rupture disc pressure is 100 psig. 50 psig was selected as a distractor because it is the approximate maximum PRT pressure expected during a design PZR safety valve discharge

Question Number: 6

Tier 2 Group 1

Importance Rating: RO 2.7

Technical Reference: APP-ALB-009-8-1; PZR student text
Proposed references to be provided to applicants during examination: None
Learning Objective: PZR Obj 2
10 CFR Part 55 Content: 41.5

Comments:

Validation comments - make 50 psig

RO 6
007A102

8-1

DEVICES:	SETPOINT:
LS-01RC-0470AW (LB-470A)	83%
LS-01RC-0470BW (LB-470B)	62%
PS-01RC-0472W (PB-472)	8 PSIG
TS-01RC-0471W (TB-471)	120°F

PRESSURIZER RELIEF TANK HIGH-LOW LEVEL PRESS OR TEMP

REFLASH: YES

OPERATOR ACTIONS:

1. **CONFIRM** alarm using:
   a. PRT level LI-470.1
   b. PRT pressure PI-472.1
   c. PRT temperature TI-471.1

2. **VERIFY** Automatic Functions: None

3. **PERFORM** Corrective Actions:

   a. **IF** level is low,
      THEN FILL the PRT with primary water to normal level using OP-100.
      (1) **IF** level continues to fall,
          THEN DIRECT an Operator to inspect the PRT for leaks.
   b. **IF** level is high,
      THEN DRAIN the PRT to normal level using OP-100.
      (1) **IF** level continues to rise,
          THEN PERFORM Step 3.e.
   c. **IF** pressure is high, **AND** level and temperature is Normal
      THEN perform the following:
      (1) **VENT** the PRT using OP-100.
      (2) **DIRECT** an Operator to verify N_2 Regulator is set at 0 psig.
          IF regulator setting is correct,
          THEN PERFORM Step 3.e.
R d. **IF** temperature is high,
      THEN REDUCE PRT temperature by recirculation through the RCDT Heat exchanger, **AND PERFORM** Step 3.e.
   e. **DETERMINE** source of inleakage. **REFER** to CAUSES Section for potential sources.

CAUSES:

1. PRZ PORVs and/or Safeties lifting or leaking
2. Relief valve actuation from RHR or CVCS systems
3. Leak or rupture of PRT or associated piping
4. Alarm circuit or instrumentation malfunction

REFERENCES:

1. Tech Specs 3.4.2.1, 3.4.2.2, 3.4.4, and 3.4.6.2
2. FSAR 5.4.11
3. 6-B-401 0936
4. ESR 9700584

R06
007A102

IMPORTANT

T.S. Safety Limit

The RCS Pressure shall not exceed 2735 psig except during hydrostatic testing.

A less than 1 hour action applies if exceeded.

Overpressure protection is ultimately provided by three spring-loaded, self-actuating safety valves. The relief setpoint for each of the three Pressurizer safety valves is 2485 psig. The three safety valves have a total design relief capacity (380 kpph each) greater than or equal to the maximum surge rate resulting from complete loss of load with no reactor trip, no operator action, and no other control system automatic response (i.e., steam dumps, rod control, Pressurizer spray, or PORVs). The **Systems** drawing shows the three safety valves connected to the steam space in the top of the Pressurizer. There are no isolation valves upstream or downstream of the safety valves.

PRESSURIZER RELIEF DISCHARGE

The PRT design is designed to receive a release of steam from the Pressurizer equivalent to 110% of Pressurizer steam space volume at an RCS Tavg of 588.8°F. The volume is the expected insurge to the PRT resulting from a turbine trip at 100% power without an immediate reactor trip. When the tank absorbs the heat from this 110% discharge, its water temperature is designed to increase from 120°F to 200°F. To meet these design criteria, temperature is normally maintained below 120°F and water level is maintained at 70% (900 ft^3).

Steam discharge to the PRT is directed through a sparger line beneath the normal PRT water level. This configuration condenses and cools the steam by mixing it with cooler water, reducing the pressure increase in the PRT following a steam discharge.

The PRT has two stainless steel rupture discs with a relief capacity equal to the combined capacity of the Pressurizer safety valves to prevent overpressurization of the PRT. The PRT and rupture disc design pressure are approximately twice the calculated pressure resulting from the maximum safety valve discharge, or nominally 100 psig. The PRT and rupture disc holders are also designed for full vacuum to prevent tank collapse if the content of the PRT cools following discharge before nitrogen is added to the tank.

DISTRACTOR

RCS HIGH POINT VENTS

The RCS high point vent valves permit venting of non-condensable gases from the reactor vessel upper head and the Pressurizer upper head to the containment atmosphere, per the requirements of NUREG-0737, Item II.B.1, and to the PRT. The subsystem is comprised of pilot-operated solenoid valves and connecting piping, arranged such that no single active failure will 1) prevent isolation of a vent path, or 2) result in the inability to vent from either the reactor vessel or the Pressurizer. The subsystem includes manual vent paths used during RCS fill and vent activities in accordance with GP-001.

Rev 6
007A102

Student Objectives

1. STATE the purpose and design function of the Pressurizer.

2. STATE the function, design bases, and power supplies of the Pressurizer major components.
   a. Pressurizer
   b. Pressurizer heaters
   c. Pressurizer spray nozzle
   d. Pressurizer spray valves
   e. Pressure relief tank
   f. Pressurizer power-operated relief valves
   g. PORV block valves
   h. Pressurizer safety valves

3. DISCUSS potential modes of Pressurizer component failures including the following:
   a. Spray valve failure open or closed
   b. Stuck open PORV.

4. DESCRIBE the normal operation of the pressurizer, including operation sequence and normal parameters, and expected system response including:
   a. How the pressurizer and pressure relief system limits RCS pressure changes during transients and steady-state conditions.
   b. How the PRT dissipates the energy from a safety or relief valve discharge.

5. DESCRIBE the modes of operations and major flowpaths of the Pressurizer in accordance with plant operating procedures.
   a. Filling the PRT
   b. Draining the PRT.
   c. Recirculating the PRT.
   d. Cooling down the PRT.
   e. Spraying the pressurizer.
   f. Pressurizer in-surge.
   g. Pressurizer out-surge.

With the unit at 100% power, Letdown Pressure transmitter PT-145 fails low.

Which ONE (1) of the following describes the impact on the unit?

Letdown Pressure Control Valve 1CS-38...

A. fails closed; actual flow continues to the RCDT.

B. fails closed; actual flow continues to the PRT.

C. fails open; actual flow continues to the VCT.

D. fails open; actual flow continues to the RHT.

B is correct. If presure input fails low, the valve will close in an attempt to maintain pressure. When the valve closes, Letdown is essentially isolated, and the LP relief valve to the PRT will lift.
A is plausible because the RCDT is the only other tank in Ctmt that could receive water from the primary system.

C and D are plausible because the valve is reverse acting, which provides a common misconception on valve fail position. VCT and RHT are the 2 flow paths of water that are possible if the valve did fail open.
Ability to monitor automatic operation of the PRTS, including: Components which discharge to the PRT

Question Number: 7

Tier 2 Group 1

Importance Rating: RO 2.7
Technical Reference: CVCS text
Proposed references to be provided to applicants during examination: None
Learning Objective: CVCS Obj 8
10 CFR Part 55 Content: 41.7

Comments:

North Anna

R07 00A301

CVCS SYSTEMS PLUS DRAWING

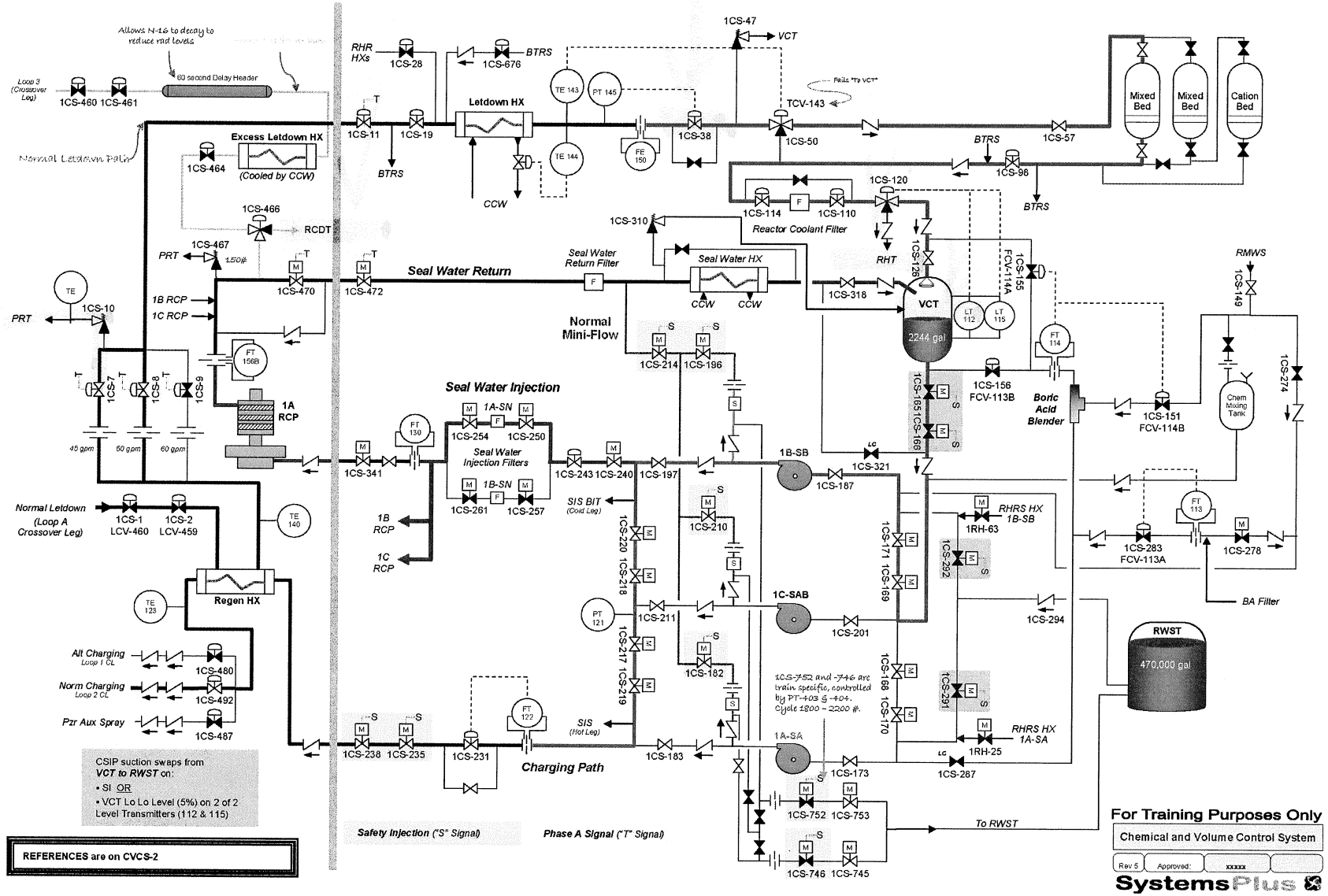

R07 00A301

i. Letdown valves

j. Controls and interlocks of CSIP normal and alternate mini-flow valves

8. STATE the interlocks, permissives, and automatic control functions of the CVCS, and the basis for each including:

a. Letdown pressure (PT-145) and flow (FE-150)

b. VCT pressure (PT-117) and outlet temperature (TE-116)

c. Charging pressure (PT-121)

d. Letdown temperatures prior to the letdown demineralizers (TE-143, -144)

e. Charging flow (FT-122) and RCP seal water injection flows (FT 124, -127, and -130)

f. VCT level (LT-112 and LT-115), excluding Primary Makeup System operation

g. CVCS controllers, including transfers between automatic and manual control, setpoint determination and adjustment, and output control

h. VCT outlet valves and CSIP suction valves

i. Letdown valves

j. Controls and interlocks of CSIP normal and alternate mini-flow valves

9. Given a set of plant conditions, PREDICT the response of the CVCS and the effect on overall plant conditions with regard to automatic control functions, signals, and interlocks including:

a. Safety injection actuation (S) signal

b. Containment Phase A isolation (T) signal

10. DESCRIBE the interrelationships (physical connections, design functions, flow paths) between the CVCS and other plant systems.

11. DESCRIBE how the Chemical and Volume Control System is used in the response to, and mitigation of, events as described in the applicable AOPs and EOPs including: **AO**

a. AOP-002, Emergency Boration

b. AOP-003, Malfunction of Reactor Makeup Control

Given the following:

- A reactor trip has occurred due to Loss of Off-Site Power.
- The crew is performing actions of EPP-004, Reactor Trip Response.
- RCS Thot is 575 degrees F and slowly rising.
- RCS Tcold is 555 degrees F and slowly lowering.
- All SG levels indicate 18% NR and rising slowly.

Which ONE (1) of the following describes the action required in accordance with EPP-004 for this condition?

A. Increase steam dump or raise AFW flow until Thot is stabilized.

B. ✓ Stop dumping steam and maintain AFW flow greater than the minimum value until at least 1 SG is greater than the minimum required level.

C. Stop dumping steam and reduce AFW flow until RCS temperature is stabilized; no othe restrictions apply.

D. Increase steam dump or raise AFW flow until Tave is stable at or trending to 557 degrees F.

B is correct. When RCPs are not available (LOOP) then use Tcold as a measure of RCS temperature.

A is incorrect. Thot will not stabilize as natural circulation sets up. The parameter to control is Tcold

C is incorrect. Restrictions apply on minimum AFW flow when SG level is less than required (25%)

D is incorrect. Would be correct if Tave was the monitored parameter, but if RCPs are tripped, Tcold is monitored because it is a function of SG pressure

Question Number: 39

Tier 1 Group 1

Importance Rating: RO 3.7

Technical Reference: EPP-004, Step 3
Proposed references to be provided to applicants during examination: None
Learning Objective: LPEOP3-1 Obj 3
10 CFR Part 55 Content: 41.10

Comments:

Instructions	Response Not Obtained
3. Check RCS Temperature:	
a. Check SG blowdown isolation valves - SHUT	a. Shut SG blowdown FCVs: 1BD-18 (FCV-8405A) 1BD-37 (FCV-8405B) 1BD-56 (FCV-8405C)
b. Stabilize AND maintain temperature between 555°F AND 559°F using Table 1.	

SG	(MLB-1A-SA)	(MLB-1B-SB)
A	1BD-11	1BD-1
B	1BD-30	1BD-20
C	1BD-49	1BD-39

TABLE 1: RCS TEMPERATURE CONTROL GUIDELINES FOLLOWING RX TRIP

o Guidance is applicable until another procedure directs otherwise.

o IF no RCPs running, THEN use wide range cold leg temperature.

	RCS TEMPERATURE TREND		
	LESS THAN 557°F AND DECREASING	GREATER THAN 557°F AND INCREASING	STABLE AT OR TRENDING TO 557°F
OPERATOR ACTION	o Stop dumping steam o Control feed flow o Maintain total feed flow greater than 210 KPPH until level greater than 25% at least one intact SG o IF cooldown continues, THEN, shut MSIVs AND BYPASS valves	o IF condenser available THEN transfer steam dump to STEAM PRESSURE mode using OP-126, Section 5.3 AND dump steam to condenser - OR - o Dump steam using intact SG PORVs o Control feed flow to maintain SG levels	o Control feed flow and steam dump to establish and maintain RCS temperature between 555°F AND 559°F

007EL106 RO 39

I. INTRODUCTION

A. Lesson objectives

Lesson Objectives

Upon completion of this lesson, the student should be able to

1. DESCRIBE the purpose of the following emergency procedures including the type of event for which they were designed and the major actions performed
   a. PATH-1 (up to entry Point C)
   b. PATH-1 (from entry Point C)
   c. EPP-004, Reactor Trip Response
   d. EPP-008, SI Termination
2. LIST, from memory, any immediate action steps of these emergency procedures (including substeps and RNOs)
3. DEMONSTRATE the below-assumed operator knowledge from the SHNPP Step Deviation Documents and WOG ERGs that support performance of EOP actions
   a. Verification of reactor/turbine trip
   b. Conditions requiring SI actuation
   c. RCP trip criteria applicability and importance
   d. Valves to verify for FWIS/MSLIS
   e. Temperatures to use for RCS trends
   f. PRZ PORV leak temperature response
   g. Parameters to use for diagnostics (LOCA, SGTR, MSLB)
   h. Meaning of abnormal for SGTR
   i. Concern with aligning excess letdown before establishing seal return
   j. Verification of cold leg recirculation capability
   k. Importance of prompt switchover to cold leg recirc
4. Given the title of an EOP foldout item, STATE the parameters to be monitored for implementation
5. Given the following EOP steps, notes, and cautions, DESCRIBE the associated basis
   a. All immediate action steps

Initial Conditions:

- A Pressurizer PORV has stuck open.
- RCS pressure is 1400 psig.
- Containment pressure is 2 psig and rising.
- CSIP flow is approximately 220 GPM.

Current Conditions:

- The PORV cannot be isolated.
- RCS pressure continues to decrease and is currently 700 psig.
- Containment pressure is 4 psig and rising.

Which ONE (1) of the following describes the status of the leak rate and CSIP flow at this time?

A. Leak rate is approximately 50% of the initial leak rate. CSIP flow is higher than the initial flow.

B. Leak rate is approximately 50% of the initial leak rate. CSIP flow is lower than the initial flow.

C. Leak rate is approximately 70% of the initial leak rate. CSIP flow is lower than the initial flow.

D. Leak rate is approximately 70% of the initial leak rate. CSIP flow is higher than the initial flow.

With RCS pressure half of what it initially was, the break flow will be approximately 70% of the initial break flow. CSIP discharge was originally pumping against 1400 psig, so the DP between CSIP and RCS was lower, resulting in higher flow than when RCS pressure is higher

Knowledge of the operational implications of the following concepts as they apply to a Pressurizer Vapor Space Accident: Change in leak rate with change in pressure

Question Number: 40

Tier 1 Group 1

Importance Rating: RO 3.1

Technical Reference: PWR Thermo Ch 6
Proposed references to be provided to applicants during examination: None
Learning Objective: None
10 CFR Part 55 Content: 41.14

Comments:

Modified wording of distractors and added CSIP flow

RO Q. 40
008 AK1.02

controlled by varying the length of the piston stroke, thereby adjusting the quantity of fluid entrapped.

Rotary positive displacement pumps use the same principle. However, the fluid is entrapped in rotating gear teeth, screws, or helical lobes.

Positive displacement pumps normally have relief valves located internally, or between the pump and the first discharge valve downstream of the pump. Most positive displacement pumps develop a discharge pressure high enough to rupture the pump casing or discharge piping, therefore, the relief valves prevent pump or system damage in case the discharge valve is closed.

PUMP LAWS

Most pumps obey what are known as the pump laws. These laws state that pump volumetric flow rate, or capacity, is directly proportional to pump speed; discharge head is directly proportional to the square of the pump speed; and the power required by the pump motor is directly proportional to the cube of the pump speed. These laws are summarized in the following equations:

$$\dot{V} \propto n$$

$$H_p \propto n^2$$

$$P \propto n^3$$

Where:

$\dot{V}$	=	pump volumetric flow rate (gpm)
n	=	pump speed (rpm)
H_p	=	pump discharge head (psi)
P	=	pump power (kW)

Equation 6-37

Using these proportionalities, we can write equations relating the conditions at one speed to those at another:

$$\dot{V}_1\left(\frac{n_2}{n_1}\right) = \dot{V}_2$$

$$H_{p1}\left(\frac{n_2}{n_1}\right)^2 = H_{p2}$$

$$P_1\left(\frac{n_2}{n_1}\right)^3 = P_2$$

Equation 6-38

A cooling water pump is operating at ~~1,800 rpm. Its capacity is 400 gpm at a discharge head of 20 psi, and requires a power of 45 kW. Determine the pump capacity, discharge head, and power requirements if pump speed is increased to 3,600 rpm.~~

$P_{RCS_i} = 1400$ psig $P_{RCS_F} = 700$ psig

$P_{CNMT_F} = 4$ psig

$P_{CNMT_i} = 2$ psig. $\dot{V}_I = 220$ gpm

~~Pump capacity:~~

FIND $\dot{V}_F$.

$\dot{V}^2 \propto H_p$

$$\frac{\dot{V}_I^2}{\dot{V}_F^2} = \frac{\Delta P_I}{\Delta P_F} \Rightarrow \dot{V}_F^2 = \dot{V}_I^2\left(\frac{\Delta P_F}{\Delta P_I}\right)$$

$$\dot{V}_F = \dot{V}_I\sqrt{\frac{696}{1398}}$$

$$\boxed{\dot{V}_F = .707\,\dot{V}_I}$$

Example 6-11 (Continued on next page)

© 1999 GENERAL PHYSICS CORPORATION

RO Q.40
~~008 AK1.02~~

Pump discharge head:

Pump power:

Example 6-11

CENTRIFUGAL PUMP CHARACTERISTIC CURVE

One of the most important characteristics of a pump is its capacity; that is, how much fluid it moves per unit of time. As Figure 6-13 shows, the capacity of a centrifugal pump decreases as the pressure at the pump discharge increases. At a particular pressure, called the shutoff head, the pump moves no fluid at all. If the pump discharges directly to the atmosphere, the pump capacity is maximum, called pump runout. A plot of discharge head versus capacity, for a given pump speed, is often called the pump characteristic curve.

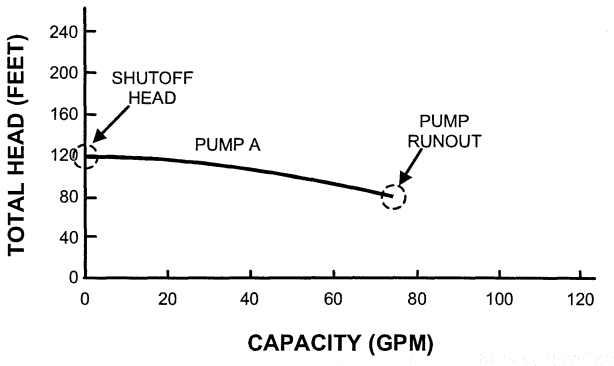

Figure 6-13 Centrifugal Pump Characteristic Curve

If the pump speeds up, the entire characteristic curve moves outward, away from the origin. As per the pump laws, the pump capacity increases by the same factor by which the speed increases, and the pump discharge head increases as the square of the factor by which the speed increases. If the pump operates at constant efficiency, the power required to operate the pump at a new speed increases as the cube of the factor by which the speed increases. However, pump efficiency varies widely over an operating range, and varies with speed as well.

To determine the pump operating point, that is, the pump's operating discharge head and capacity, it is necessary to know what head loss characteristics exist in the fluid system in which

© 1999 GENERAL PHYSICS CORPORATION

12. 008 G2.1.2 002/BANK/WTSI/HIGHER//SRO/HARRIS/7/2007/NO

Given the following:

- A LOCA has occurred
- The crew is performing PATH-1
- The following parameters exist:
- All SG pressures –1000 psig and slowly trending down
- All SG levels – being controlled at 42% NR
- PRZ level – off-scale high
- RVLIS Full Range indicates 94%
- Containment Pressure – 2 psig
- RWST level – 74% and decreasing slowly
- ONE CSIP has been stopped in accordance with PATH-1
- RCS pressure – 985 psig and decreasing
- Core Exit Thermocouples indicate 545 degrees F and slowly trending down.

Based on these indications, which ONE (1) of the following procedures will the crew enter next?

A. EPP-008, SI Termination

B. EPP-009, Post-LOCA Cooldown and Depressurization

C. EPP-010, Transfer to Cold Leg Recirculation

D. EPP-014, Faulted SG Isolation

A-Incorrect. RCS Pressure not stable, and RCS inventory too low based on RVLIS, although PZR level is 100%
B-Correct.
C-Incorrect. RWST level is high. Entry to EPP-010 is 23.4% RWST level.
D-Incorrect. SG pressures are trending down, but levels controlled and RCS pressure is lowering. Presure reduction is likely due to SI flow

Question Number: 76

Tier 1 Group 1

Importance Rating: SRO 4.0

Technical Reference: PATH-1

Proposed references to be provided to applicants during examination: None
Learning Objective: LP EOP3-5, Objective 1.a
10 CFR Part 55 Content: 43(b).5

Comments:

10CFR55.43(b).5 because the SRO must evaluate plant conditions and determine a course of action by selecting the appropriate procedure transition

FOLDOUT A

- RCP TRIP CRITERIA

  IF both of the following occur, THEN stop all RCPs:

  - SI flow - GREATER THAN 200 GPM
  - RCS pressure - LESS THAN 1400 PSIG

- AFW SUPPLY SWITCHOVER CRITERIA

  IF CST level decreases to less than 10%, THEN switch the AFW water supply to the ESW system using OP-137, "AUXILIARY FEEDWATER SYSTEM", Section 8.1.

- RHR RESTART CRITERIA

  IF RCS pressure decreases to less than 230 PSIG in an uncontrolled manner, THEN restart RHR pumps to supply water to the RCS.

- ALTERNATE MINIFLOW OPEN/SHUT CRITERIA

  - IF RCS pressure decreases to less than 1800 PSIG, THEN verify alternate miniflow isolation OR miniflow block valves - SHUT
  - IF RCS pressure increases to greater than 2200 PSIG, THEN verify alternate miniflow isolation AND miniflow block valves - OPEN

FOLDOUT B

- SECONDARY INTEGRITY CRITERIA

  IF any of the following occurs, THEN GO TO EPP-014, "FAULTED STEAM GENERATOR ISOLATION", Step 1.

  - Any SG pressure - DECREASES IN AN UNCONTROLLED MANNER AND THAT SG HAS NOT BEEN ISOLATED
  - Any SG - COMPLETELY DEPRESSURIZED AND THAT SG HAS NOT BEEN ISOLATED

- PATH-2 TRANSITION CRITERIA

  IF any SG level increases in an uncontrolled manner OR any SG has abnormal radiation levels, THEN GO TO PATH-2, entry point J.

- COLD LEG RECIRCULATION SWITCHOVER CRITERIA

  IF RWST level decreases to less than 23.4% (2/4 Low-Low alarm), THEN GO TO EPP-010, "TRANSFER TO COLD LEG RECIRCULATION", Step 1.

00862.1.12
SR076

Instructions	Response Not Obtained
49. Check SI Termination Criteria:	
a. RCS subcooling - GREATER THAN 10°F [40°F] - C 20°F [50°F] - M	a. GO TO Step 50.
b. Check secondary heat sink by observing any of the following: o Level in at least one intact SG - GREATER THAN 25% [40%] YES o Total feed flow to intact SGs - GREATER THAN 210 KPPH	b. GO TO Step 50.
c. RCS pressure - STABLE <u>OR</u> INCREASING NO →	c. GO TO Step 50.
d. PRZ level - GREATER THAN 10% [30%]	d. Stabilize RCS pressure with normal spray. GO TO Step 50.
e. GO TO EPP-008, "SI TERMINATION", Step 1. } DO NOT MEET	
50. <u>WHEN</u> the SI termination criteria in Step 49 are met, <u>THEN</u> GO TO EPP-008, "SI TERMINATION", Step 1.	

008G2.1.12
SR076

Instructions	Response Not Obtained
51. Check CNMT Spray Status:	
a. Check any CNMT spray pump - RUNNING	a. GO TO Step 52.
b. Consult plant operations staff to determine if CNMT spray should be placed in standby. (Refer to Attachment 9)	
c. CNMT spray - TO BE PLACED IN STANDBY	c. <u>WHEN</u> plant operations staff directs CNMT spray be placed in standby, <u>THEN</u> do Steps 51d, e AND f. Continue with Step 52.
d. Reset CNMT spray signal.	
e. Stop CNMT spray pumps.	
f. Align CNMT spray for standby operation: o Shut CNMT spray pump discharge valves: 1CT-50 1CT-88 o Shut CNMT spray chemical addition valves: 1CT-11 1CT-12	

00862.1.12
SR076

Instructions	Response Not Obtained
52. Check Source Range Detector Status:	
a. Intermediate range flux - LESS THAN $5x10^{-11}$ AMPS	a. WHEN flux less than $5x10^{-11}$ AMPS, THEN do Steps 52b AND c. Continue with Step 53.
b. Verify source range detectors - ENERGIZED	
c. Transfer nuclear recorder to source range scale.	
53. Check RHR Pump Status:	
a. RCS Pressure - GREATER THAN 230 PSIG	a. ~~GO TO Step 55.~~
b. RCS pressure - STABLE OR INCREASING	b. GO TO Step 54.
c. Stop RHR pumps.	
54. Check RCS And SG Pressures:	
a. Check for both of the following: o All SG Pressures - STABLE OR INCREASING o RCS pressure - STABLE OR DECREASING	a. RETURN TO Step 44.

Consider STABLE, not faulted. See Users Guide provided after PATH-1 Guide

00862.1.12
SR076

Instructions	Response Not Obtained
55. Establish CCW Flow To The RHR Heat Exchangers:	
a. Verify both CCW pumps - RUNNING	a. For each running CCW pump, open the associated CCW return from RHR HX valve: o Train A: 1CC-147 o Train B: 1CC-167 GO TO Step 56.
b. Open the following valves: 1CC-147 1CC-167	
c. Verify CCW flow to the RHR heat exchanger(s).	c. <u>WHEN</u> CCW flow to the RHR HX(s) verified, <u>THEN</u> do Step 55d. Continue with Step 56.
d. Perform one of the following to establish two independent CCW systems: o Shut train A CCW non-essential supply AND return valves: 1CC-99 1CC-128 o Shut train B CCW non-essential supply AND return valves: 1CC-113 1CC-127	

008G2.1.12
SRO 76

Instructions	Response Not Obtained
56. Check EDG Status:	
a. Check AC emergency buses 1A-SA <u>AND</u> 1B-SB - ENERGIZED BY OFFSITE POWER: o Check bus voltages o Check breakers 105 <u>AND</u> 125 - CLOSED	a. GO TO Step 56c.
b. GO TO Step 56e.	
c. Check AC emergency buses 1A-SA <u>OR</u> 1B-SB - ENERGIZED BY OFFSITE POWER: o Check bus voltages o Check breakers 105 <u>OR</u> 125 - CLOSED	c. Align AND monitor plant equipment using PATH-1 GUIDE, Attachment 10.
d. Align AND monitor plant equipment referring to AOP-025, "LOSS OF ONE EMERGENCY AC BUS (6.9KV) OR ONE EMERGENCY DC BUS (125V)".	
e. Check any EDG - RUNNING UNLOADED	e. GO TO Step 57.
f. Reset SI.	
g. Shutdown any unloaded EDGs using OP-155 "DIESEL GENERATOR EMERGENCY POWER SYSTEM" Section 7.0.	

008 G2.1.12
SR076

Instructions	Response Not Obtained
57. Initiate Evaluation Of Plant Status:	
a. RHR system - CAPABLE OF COLD LEG RECIRCULATION (Refer to Attachment 3.)	a. GO TO EPP-012, "LOSS OF EMERGENCY COOLANT RECIRCULATION", Step 1.
b. Check auxiliary <u>AND</u> radwaste processing building radiation - NORMAL	b. GO TO Step 57d.
c. GO TO Step 58.	
d. High Radiation - DUE TO LOSS OF RCS INVENTORY OUTSIDE CNMT	d. Identify AND isolate leakage. GO TO Step 58.
e. GO TO EPP-013, "LOCA OUTSIDE CONTAINMENT", Step 1.	
58. Check RCS Status:	
a. Check for both of the following: o RCS pressure - LESS THAN 230 PSIG NO → o Any RHR HX header flow - GREATER THAN 1000 GPM	a. GO TO EPP-009, "POST LOCA COOLDOWN AND DEPRESSURIZATION", Step 1.

00862.1.12
SR076

6.3 Resetting SI, Phase A, Phase B, and FW Isolation

In most events SI, Phase A, Phase B, and FW Isolation signals are reset just prior to the steps that manipulate components impacted by these signals. There may be cases; however, when the EOPs direct manipulation of components and an isolation signal affecting the component has not been directed to be reset. In this case it is permissible to reset the associated signal; however, the impact of this action should be evaluated. For example, reset of SI and Phase A may restore the torque switch overload protection for limitorque valves that reposition on SI or are required to reposition to establish cold leg recirculation. In this case the status of the limitorque valves should be evaluated prior to resetting the signals. Note that some RAB ventilation will realign when SI is reset and the ventilation portion of SI verification attachment of OMM-004 should be completed or verified using the plant computer prior to resetting SI.

6.4 Sequencer Operation

Any time the sequencer is actuated by an SI or loss of off-site power signal, the operator should monitor the Emergency Safeguards Sequencer for proper equipment loading. Monitoring the sequencer ensures immediate attention is given to major equipment including that which is not verified in the EOPs (e.g., E-6 fans, WC-2 chiller), but would be checked by OMM-004. The operator should allow the sequencer to complete its cycle prior to attempting to start any large electrical loads including loads the sequencer may have failed to start. If any safeguards component has failed to auto start, a manual start attempt should be made when the component status is checked during implementation of the PATH-1 GUIDE, "Safeguards Verification" attachment. This includes the case where the sequencer itself has failed. This restriction prevents overloading a diesel generator and/or its associated emergency bus. It also provides an orderly methodology to address and correct failures of safeguards equipment. (Reference 2.2.3.15)

6.5 Stable Pressure/Temperature

The operator is frequently asked to check RCS and SG pressures and temperature as STABLE (or INCREASING). STABLE does not necessarily imply constant. RCS and/or SG pressure may be decreasing slowly due to an operator-controlled cooldown and still be considered stable. If the operator can control the rate and magnitude of the pressure change, then pressure should be considered stable. The same conventions apply to temperature. Note that when evaluating RCS pressure response for reducing or terminating SI with an RCS cooldown in progress, RCS pressure may be considered STABLE if subcooling is increasing. (References 2.2.2.11, 2.2.2.19 and 2.2.3.25)

SG pressure may also trend downward during a LOCA if RCS temperature (as measured by core exit thermocouples or T-hot) drops below that of the water in the secondary side of the SGs. This response is caused by the cooling of the secondary water by the circulating RCS fluid.

00862.1.12
SR076

6.5 Stable Pressure/Temperature (continued)

In evaluating this response for a potential UNCONTROLLED secondary depressurization, the SG pressure should be compared to the saturation pressure for the RCS fluid. As long as the SG pressure remains above the saturation pressure of the RCS fluid, the SG should NOT be considered faulted. (References 2.2.2.24 and 2.2.3.35)

6.6 Realignment of Plant Equipment Following SI Termination

An attachment to EPP-008 is provided as a guide to aid the operator in realigning plant systems after SI termination. The attachment assumes the SI is spurious, therefore, the operator must evaluate the recommended realignments based on actual plant conditions. The appropriate system operating procedures should be referenced for any applicable precautions and limitations.

The reactor trip breakers are not reclosed in EPP-008. This action is performed when directed in GP-004 or GP-007, after the operator exits EPP-008. Until the trip breakers are reclosed, automatic SI actuation (T.S. 3.3.2) is inoperable. This information is related to the operator by a NOTE in EPP-008.

Other systems may have become inoperable during implementation of EOPs. The status of Tech Spec components and systems must, therefore, be evaluated when exiting the EOPs. Also, implementation of EOPs does not suspend Tech Spec surveillance requirements (Reference 2.2.2.10).

6.7 Definitions of "Verify", "Check" and "Actuate"

At SHNPP, the operator is frequently directed to "verify" or "check" a condition. In several instances the operator is also directed to "actuate" components or signals. The term "verify" means to observe the condition, and if it is not satisfied, attempt to satisfy it using whatever means are available (e.g. manually from the MCB, locally by an AO, etc.). If the condition is still not established, the operator should go to the contingency action or continue on as appropriate.

Example: Verify at least one CSIP - RUNNING

If at least one CSIP is not running the operator should make all attempts to start one.

Occasionally, steps that require a condition be "verified" will contain detailed instructions for local actions in the RNO column. If the operator can not satisfy a condition with actions at the MCB, the RNO column should be consulted for instructions regarding local actions. If no local actions are specified in the RNO, the operator should continue attempts to satisfy the condition using all means at his disposal. If local actions are specified, they should be used to ensure they are accomplished properly.

I. INTRODUCTION

A. Lesson objectives

Lesson Objectives

Upon completion of this lesson, the student should be able to

1. DESCRIBE the purpose of the listed EOPs including the type of event for which they were designed.
   a. EPP-009, Post-LOCA Cooldown and Depressurization
   b. EPP-020, SGTR with LOCA, Subcooled Recovery Desired
   c. EPP-021, SGTR with LOCA, Saturated Recovery Desired
2. ARRANGE the major action categories for each of the listed EOPs in the proper sequence
   a. EPP-009, Post-LOCA Cooldown and Depressurization
   b. EPP-020, SGTR with LOCA, Subcooled Recovery Desired
   c. EPP-021, SGTR with LOCA, Saturated Recovery Desired
3. EXPLAIN the below-assumed operator knowledge from the SHNPP Step Deviation Documents and WOG ERGs that support performance of EOP actions
   a. Reason initial cooldown is allowed to continue if boron concentration is not greater than that required for shutdown margin
   b. Three advantages gained by starting an RCP, if none are running, during recovery efforts in EPP-009 and EPP-020
   c. Reasons to conduct depressurization of RCS and terminate SI as quickly as possible after a cooldown has been initiated if an inactive loop(s) exist
4. Given the title of an EOP foldout item, STATE the parameters to be monitored for implementation
5. Given the following EOP steps, notes, and cautions, DESCRIBE the associated basis for
   a. Caution controlling the starting of an RCP that has experienced a complete loss of seal cooling
   b. Items to consider when reducing or terminating SI flow
   c. The establishment of a 100°F/hr cooldown rate limit in EPP-009, EPP-020, and EPP-021

Given the following:

- A loss of Component Cooling Water has occurred.
- The crew is attempting to restore CCW flow in accordance with AOP-014, Loss of Component Cooling Water.
- BOTH trains of CCW flow indicate 0 gpm.

Which ONE (1) of the following describes the limitations on operation of RCPs?

All RCPs MUST be stopped...

A. immediately upon loss of CCW flow to motor oil coolers.

B. immediately upon loss of CCW flow to RCP thermal barriers.

C.✔ within 10 minutes of a total loss of CCW flow to motor oil coolers.

D. within 10 minutes of a total loss of CCW flow to RCP thermal barriers.

A and B are incorrect. Immediate trips would be based on temperature exceeding limits; plausible becuase the procedure does contain conditions based on temperature that requires immediate trip
C is correct.
D is incorrect but plausible bvecause a loss of CCW to the RCP would include TBHX cooling. There are no time limits asociated with loss of TBHX cooling, only RCP motor cooling.
Knowledge of the effect that a loss or malfunction of the CCWS will have on the following: RCP

Question Number: 8

Tier 2 Group 1

Importance Rating: RO 4.1
Technical Reference: AOP-014 and BD
Proposed references to be provided to applicants during examination: None
Learning Objective: LPAOP3-14, Obj 6
10 CFR Part 55 Content: 41.10, 7

Comments:

RO-8
008 K3.03

INSTRUCTIONS	RESPONSE NOT OBTAINED

3.3 Loss of a CCW Pump

NOTE

The standby CCW pump starts at 52 psig discharge pressure.

☐1. **CHECK** the standby CCW pump has STARTED.

✱☐2. **CHECK** CCW header pressure greater than 52 psig.

☐1. **START** the standby CCW pump.

2. **IF** CCW is LOST, **THEN PERFORM** the following:

a. **VERIFY** the following valves SHUT

☐ • 1CS-7, 45 gpm Letdown Orifice A

☐ • 1CS-8, 60 gpm Letdown Orifice B

☐ • 1CS-9, 60 gpm Letdown Orifice C

☐ • 1CS-460, Excess Letdown

☐ • 1CS-461, Excess Letdown

☐ • 1SP-948, RCS Loop B & C Hot Leg Cnmt Isol

☐ • 1SP-949, RCS Loop B & C Hot Leg Cnmt Isol

☐ • 1SP-40 SB, Pressurizer Liquid Sample Isol

☐ • 1SP-41 SA, Pressurizer Liquid Sample Cnmt Isol

☐ • 1SP-59 SB, Pressurizer Stm Space Sample Isol

☐ • 1SP-60 SA, Pressurizer Stm Space Sample Isol

(Continued on Next Page)

008 K3.03
RO-8

INSTRUCTIONS	RESPONSE NOT OBTAINED

3.3 Loss of a CCW Pump

2. (continued)

b. ISOLATE Charging flow as follows:

☐ **(1) PLACE** controller FK-122.1, Charging Flow, in MANUAL AND SHUT.

☐ **(2) SHUT** 1CS-235 SB, Charging Line Isolation.

☐ **(3) SHUT** 1CS-238 SB, Charging Line Isolation.

☐ **c. IF** the RCS is SOLID, **THEN STOP** the running CSIP.

☐ **d. IF** RHR is operating, **THEN SHUT** 1CS-28, RHR Letdown (HC-142.1).

e. IF CCW is expected to be lost for greater than 10 minutes, **THEN PERFORM** the following:

☐ **(1) CHECK** the Reactor is TRIPPED.

☐ **(2) IF** the reactor is NOT TRIPPED, **THEN TRIP** the Reactor **AND GO TO** EOP PATH-1. (Continue with this procedure as time permits.)

☐ **(3) STOP** ALL running RCPs.

☐ **f. GO TO** Step 4.

008 K3.03
RO 8

1.0 DISCUSSION (continued)

6. Tripping the anti-pumping logic by stopping and holding the switch until header pressure drops below 52 psig prevents the CCW pumps from auto-starting on low pressure. Cycling the Control Power knife switches for the affected pump will reset the anti-pumping logic.

7. Should a loss of CCW to the RCPs occur, the CVCS continues to provide seal injection flow to the RCPs; the seal injection flow is sufficient to prevent damage to the RCP seals with a loss of thermal barrier cooling. However, the loss of CCW to the motor bearing oil coolers will result in an increase in oil temperature and a corresponding rise in motor bearing temperature. It has been demonstrated by testing that the RCPs will incur no damage as a result of a CCW flow interruption of 10 minutes. Tripping the RCPs if CCW cannot be re-established within 10 minutes is required by FSAR Sections 5.4.1.3.3 and 9.2.2.5.

8. Loss of CCW to the RCPs will require a plant shutdown or trip and stopping of the RCPs to prevent damage to the pumps or motors. Additional actions required by AOP-018, Reactor Coolant Pump Abnormal Conditions, would also have to be performed.

9. Loss of CCW to non-essential equipment will require securing that equipment and placing alternate equipment in service if required for continued plant operation.

10. The design volume of the CCW surge tank is to allow for three (3) minutes postulated flow from a ruptured thermal barrier heat exchanger before the shutting of 1CC-252.

11. Leakage in excess of 15.8 gph per train could exceed the capacity of the surge tank and render CCW inoperable. Surge tank capacity is based on the time required to align makeup flow from the RMWS under post-accident conditions.

12. Due to pressure differential, these systems could leak into the CCW System:
    - RHR Heat Exchanger (if RHR pressure exceeds CCW pressure)
    - RHR Pump Seal Cooler (if RHR pressure exceeds CCW pressure)
    - RCP Thermal Barrier Coolers
    - Letdown Heat Exchangers
    - Excess Letdown Heat Exchangers
    - Gross Failed Fuel Detector
    - Primary Sampling (through Sample Coolers)

008K303
Rev 8

1. INTRODUCTION

Lesson Objectives TP

A. Lesson objectives

Upon completion of this lesson, the student should be able to

1. IDENTIFY Entry Conditions required for entry into AOP-014, Loss of Component Cooling Water
2. IDENTIFY locations which by virtue of normal operation ΔP are a potential source of CCW in/out leakage per AOP-014, Loss of Component Cooling Water
3. Concerning the CCW pumps, DESCRIBE briefly why AOP-014 has steps requiring the operator to
   - Hold the control switch to stop until discharge pressure is below a certain value, and
   - Cycle control power for the breaker
4. DESCRIBE the expected response of CCW Surge Tank level indication to a leak in the CCW system
5. SUMMARIZE lessons learned from the related industry events below
   - SHNPP LER 90-018, Loss of CCW Inventory Due to Lifted RCDT HX Valve Caused by Incorrect Relief Valve Setpoint
   - SHNPP LER 90-019, Potential Loss of RHR System due to Loss of CCW Caused by System Design
6. Given a set of Entry Conditions, and a copy of AOP-014, DETERMINE the appropriate response

B. Reason for study

In order for the operator to safely operate the plant, a good working knowledge of the Abnormal Operating Procedures is required. The operator must know what to do in abnormal conditions to be able to return the plant to a normal operating configuration

Given the following:

- The unit is at 100% power.
- An RCS leak has developed.
- RCS pressure is degrading to a reactor trip setpoint.

Which ONE (1) of the following describes reactor trip instrumentation required by technicnical specifications designed to protect against this event and the basis for the trip?

A. OT Delta T; DNBR protection

B. OT Delta T; Hot Channel Factor protection

C. OP Delta T; DNBR protection

D. OP Delta T; Hot Channel Factor protection

A is correct. OTDT provides DNBR protection, as it has an input from RCS pressure. As pressure lowers, DNBR lowers. OTDT setpoint will lower as pressure lowers.

B is incorrect because Hot channel factors are protected by control rod positions, reactor power rate of change limitations, and total core power limitations.

C is incorrect because OPDT protects against core power limitations, it does not have an RCS pressure input. Protection for DNB is correct, however.

D is incorrect because OPDT does not provide protection in this event. Plausible because OPDT trips do provide protection against exceeding maximum hot channel factors

Equipment Control: Knowledge of bases in technical specifications for limiting conditions for operations and safety limits.

Question Number: 41

Tier 1 Group 1

Importance Rating: RO 2.5

Technical Reference: TS section 3.3.1 basis
Proposed references to be provided to applicants during examination: None
Learning Objective: RPS Obj 14
10 CFR Part 55 Content: 43.2

Comments:

009 62.2.25
R041

REACTOR TRIPS

Source Range Reactor Trip

SR above 1 x 10^5 cps (1 of 2 logic)

Prevented by:

- That channel's Trip Bypass switch in BYPASS (note this switch normally only operated for testing or OWP's.)

or

- Either IR channel exceeding P-6 (1 x 10^{-10} amps) and then operating SR Block Control Switch

or

- Permissive P-10 >10%. P-10 blocks trip and high voltage to prevent inadvertent energization of SR.

Protects against excessive power excursions during start-up

Mitigates consequences of subcritical rod withdrawal accident

Protects personnel in containment during shutdown

Prevents power increase above SR without IR

Intermediate Range Reactor Trip

IR Current >25% power (1 of 2 channels).

Prevented by:

- Exceeding 10% power (P-10) and then operating IR Block Control Switch

If IR power is >20% and the IR Block Control Switch has not been operated then rod motion is blocked and an alarm will sound.

Power Range Low Power Reactor Trip

PR > 25% (2 of 4).

Prevented by:

- Exceeding 10% power (P-10) and then operating PR Block Control Switch

Note: Will receive an alarm if any 1 of the 4 PR channels >25% and the PR Block Control Switch has not been operated.

Power Range High Power Reactor Trip

PR > 109% (2 of 4)

There are NO blocks or bypasses for the High Power Reactor Trip.

- Rod stop at 103 percent on 1/4 logic

Power Range High Negative Flux Rate Trip

Protects from High Flux Peaking DNBR > 1.3

Decrease > 5 percent in two seconds on 2/4 channels

Single dropped rod, may return to power

DNBR/Peaking factors protection

RCS Loop Low Flow Trips

Setpoint 90.5 percent

Logic: Two of three loops below P-8, and above P-7 or one of three loops above P-8

Protects against DNB (inadequate flow to remove heat generated)

ΔT trips do not respond fast enough

Bypassed below 10 percent power (P-7) - While shutdown, heat removal can be accomplished by Natural Circulation capability

RCP Undervoltage Trip

Initiates at voltage below 5148 volts on 2/3 sensors

Protects against complete loss of flow

Blocked by permissive P-7 below 10 percent power

Sensors located on RCP motor side (senses trip of RCP circuit breaker)

RCP Underfrequency Trip

Initiates if frequency decreases below 57.5 Hz on 2/3 sensors

Ensures forced flow during pump coast down

Automatically blocked below P-7

Sensors located on RCP motor side (senses trip of RCP circuit breaker)

Low Pressurizer Pressure Trip

Setpoint: 1960 psig; 2/3 logic; Trip is rate sensitive

Protects against excessive void formation and DNB

Limits range of OTΔT trip

Bypassed below 10 percent power, automatic, Permissive P-7

Permits S/D and C/D with shutdown banks withdrawn

High Pressurizer Level

Setpoint 92 percent; 2/3 logic

Backup to high pressure trip

Protects PRZ safeties and piping from water hammer

Bypassed below 10 percent power (P-7), allows cold (solid) plant operations

High Pressurizer Pressure Trip

Setpoint 2385 psig; 2/3 logic

Protects RCS from overpressure

50 psig Above PORV setpoint

Prevent unnecessary lifting of PRZ safeties

Reactor trip on safety injection

Limits severity of Safety Injection (SI) initiating accidents (Loss of coolant, Steam line break)

Safety Injection auto-actuation setpoints:

- PRZ pressure < 1850 psig (blocked < P-11)
- Main Steam pressure < 601 psig (rate compensated, blocked < P-11)
- Containment pressure > 3 psig (cannot be blocked)

Reactor Trip following Turbine Trip

Turbine trip above 10 percent power

Auto stop oil pressure (two of three logic) 1150# (ASTs 63-3, 4, & 5)

All four turbine stop valves closed (< 1 percent open)

Enabled above P-7 (10 percent power)

Anticipatory - prevents overtemperature, overpressure conditions due to turbine trip (loss of load)

OTΔT and high pressure trips only terminate transient

Low-low Steam Generator (SG) level trip

Setpoint: 25 percent of narrow range, 2/3 logic

Protects against loss of heat sink

Sustained steam/feed flow mismatch

Steam generator boil dry

RCS overpressure/overtemperature excursion

Low SG Level-Low Feedwater Flow Trip

1 of 2 level channels < 25% (narrow range) on any S/G

and

Steam flow > feed flow (in same S/G) by 40 %

Protects for anticipated loss of heat sink

Overtemperature Differential Temperature (OTΔT) Trip

Compares Loop ΔT to setpoint ΔT (2/3)

Provides DNB Protection

Setpoint based on

- Tavg
- Pressurizer Pressure
- Axial flux difference

Setpoint varies based on penalties or rewards as parameters vary from a nominal full power value

Rod stop and turbine runback: 3 percent less than trip

Overpower Differential Temperature (OPΔT) Trip

Compares Loop ΔT to setpoint ΔT (2/3)

Provides assurance of fuel integrity by limiting fuel rod power density under all overpower conditions

Setpoint based on

- Tavg
- Rate of change of Tavg
- Setpoint varies based on penalties as parameters vary from a nominal full power value

Rod stop/turbine runback: 1.9 percent less than trip

REFERENCES

OP-103 Reactor Protection System http://nggweb/HNPpassportdm/Pom/OP-103.pdf

FSAR 7.3 Engineered Safety Features System http://nggweb/HNPSITE/Fsarmast/7-3%20Engineered%20Safety%20Features%20System.pdf

DBD 301 Reactor Control and Protection http://nggweb/HNPsite/Dbd/DBD-301.pdf

Tech Specs http://nggweb/HNPSITE/HumanPerformance/Harris_Tech_Specs.pdf

CWD for ESF (6-B-401-0585 thru 6-B-401-0620) http://nggweb/HNPpassportdm/Drw/CWD/6-B-401%200585.TIF

Diversification
Redundancy
Independent
Failsafe
Testable

009 G 2.2.25
RO 41

c. 3.3.1, Reactor Trip System Instrumentation

13. IDENTIFY entry conditions and required actions for the RPS Technical Specifications that require actions to be taken in one hour or less.

14. Given a copy of the appropriate section of the Technical Specifications, properly APPLY the following Technical Specification and their bases (SRO only) to a given plant condition.
    a. 2.1.1, Reactor Core
    b. 2.1.2, Reactor Coolant System Pressure
    c. 2.2.1, Reactor Trip System Instrumentation Setpoints
    d. 3.3.1, Reactor Trip System Instrumentation

Initial Conditions:

- The unit is in Mode 1, 70% power.
- Pressurizer Pressure Control is operating normally in Automatic.
- Backup Heater Group B is ON.
- Backup Heater Groups A and D are in AUTO.

Current Conditions:

- A transient has occurred, requiring entry to AOP-019, Malfunction of RCS Pressure Control.
- Initial actions to stabilize the unit have been taken.
- Pressurizer pressure indicates 2190 psig and lowering slowly.
- Pressurizer Backup Heater Groups A and D are energized.
- Pressurizer Backup Heater Group B and the Control Group are de-energized.

Based on the indications above, which ONE (1) of the following describes the NEXT action required with regard to pressurizer heaters in accordance with AOP-019?

A. Ensure that pressurizer level is above the setpoint for Pressurizer Heater de-energization, and take appropriate action to energize or de-energize heaters.

B. Momentarily place Heater Groups B and C to OFF, then place in AUTO or ON.

C. Momentarily place ALL Heater Groups to OFF, then place in AUTO or ON.

D. Locally close Pressurizer Heater Group C and D Power Supply Breakers to stabilize RCS pressure.

B is correct. If heaters are not operating in auto, then the AOP directs them to be placed in OFF, then in ON.
C is incorrect because heaters that are operating properly do not have to be cycled
A is incorrect because the action required is incorrect based on the AOP. Plausible because PZR level below the setpoint should cause heaters to be off, and this could be considered conflicting indication
D is incorrect because local operation would only be performed if remote manual operation did not succeed

Question Number: 10

Tier 2 Group 1

Importance Rating: RO 3.3

Technical Reference: AOP-019
Proposed references to be provided to applicants during examination: None
Learning Objective: PZRPC Obj 9
10 CFR Part 55 Content: 41.7

Comments:

010 A2.01
R010

INSTRUCTIONS	RESPONSE NOT OBTAINED
3.1 Pressure Control Malfunctions While Operating With a Pressurizer Bubble	
16. ATTEMPT to reset affected PRZ heaters as follows:	
☐ **a. MOMENTARILY PLACE** affected heater control switch to OFF **AND RETURN** to ON.	
☐ **b. CHECK** proper PRZ heater operation RESTORED.	✸☐ **b. LOCALLY OPEN OR CLOSE** PRZ Heater Group power supply (480V Bus) breakers as needed to control affected heater groups: • 1A1-1D, Group A • 1B1-4B, Group B • 1D2-5B, Group C • 1D1-4D, Group D
☐ **17. REFER TO** Tech Spec 3.4.3 **AND IMPLEMENT** action where appropriate.	
✸☐ **18. REFER TO** Tech Spec 3.2.5 **AND IMPLEMENT** action where appropriate.	
19. PERFORM the following:	
☐ **a. REFER TO** Attachment 3, Pressure Control Malfunction Symptoms—Bubble in Pressurizer.	
☐ **b. DIRECT** Maintenance to investigate and repair the PRZ Pressure Control System component malfunction.	

decrease pushbutton is sensed as a demand by the operator to increase plant pressure. The manual control portion of the circuitry continuously tracks the output of the controller when it is in AUTO, permitting a bumpless transfer to MANUAL. However, the automatic control portion of the circuitry does NOT continuously track the output of the controller when it is in MAN. Therefore, actual plant pressure and the controller setpoint must be matched prior to switching the controller from MAN to AUTO.

HEATER CONTROL

The PRZ group C heaters are the control heaters. The control heaters operate on a variable voltage signal controlled by the PRZ master pressure controller output. The PRZ master pressure controller output varies between 4 and 20 ma and linearly controls the voltage output of a 0-489V, three-phase, silicon controlled rectifier (SCR) controller. The SCR controller provides power to the variable heaters. By varying the voltage output of the SCR controller, the heat output of the control heater group is varied.

The control switch for the group C heaters controls the power supply breaker. The control heaters output is controlled by the PRZ master pressure controller output signal. They will be full on when the error signal output of the PRZ master pressure controller corresponds to a difference between actual pressure and reference pressure (2235 psig) of -15 psi, or 2220 psig. Conversely, the control heaters will be full off when the error signal is +15 psi, or 2250 psig. Between the high and low error from reference pressure, the heater output varies linearly. Since the PRZ Master Pressure Controller is a P + I controller, the actual pressure band in which the heaters will operate is dependent on the duration of the error signal.

Control switches for the backup heaters (groups A, B, and D) have three positions (OFF, AUTO, ON). In AUTO, the backup heaters are controlled via the PRZ master pressure controller. The heaters will be full on when the error signal output of the PRZ master pressure controller corresponds to -25 psi, or 2210 psig and decreasing, and full off at -17 psi, or 2218 psig and increasing. Since the PRZ master pressure controller is a P + I controller, the actual pressure band in which the heaters will operate is dependent on the duration of the error signal. Operation of the control switch to ON or OFF directly controls the heater power supply breaker. Refer to AOP-019 Attachment 1 or Figure 2 within this text to see the operator aid provided.

Control switches are provided for heater groups A and B at the ACP. The switches at the ACP have three positions (ON, AUTO, OFF). The switches must be selected to AUTO to allow automatic heater control at the ACP, after activating the transfer. Automatic operation from the ACP is provided from PT-444.

A bistable in the heater control circuit energizes all the backup heaters whenever PRZ level is +5% above reference level. This signal overrides the

010 A2.01
R010

master pressure controller signal. The purpose is to quickly heat subcooled water from a PRZ insurge. The heaters decrease the response time for RCS pressure control by reducing the time necessary to bring the cooler insurge water to saturation temperature. All heaters are interlocked with PRZ level, so if PRZ level falls below 17%, the backup and control heaters are deenergized (breakers open). This interlock prevents uncovering energized heaters and damaging them. This interlock is bypassed for groups A and B when they are operated from the ACP. The interlock is provided by a selectable level channel, using a switch on MCB panel 1A2.

When PRZ level is restored above 17% level, the control heaters will not automatically reenergize and operator action is required to reclose the supply breaker by cycling the control switch to OFF and then back to ON. Backup heater group D will automatically reenergize if the MCB switches are in the ON or AUTO position. However, the restoration of backup heater groups A and B is conditional due an anti-pumping circuit which affects these two groups. If these heater groups were deenergized when the PRZ low level occurred, they will automatically reenergize on demand (AUTO or ON) after PRZ level is restored. If these heater groups were energized when the PRZ low level occurred, operator action is required to reset the anti-pumping feature by cycling the control switch to OFF and then back to AUTO or ON.

During a loss of offsite power or SI actuation, the PRZ backup heaters groups A and B will be deenergized by the load sequencers. Groups A and B are supplied by emergency buses 1A1 and 1B1, which are automatically de-energized. The heaters may be reenergized from the MCB after the sequencer load block 9 permissive is received and 1A1 and 1B1 are re-energized. Additional details on sequencer operation may be found in the Sequencer text. The group C and D heaters are not affected by an SI actuation, but will be de-energized if offsite power is lost to their nonsafety-related power supplies (buses 1D1 and 1D2).

IMPORTANT

Use of 'A' spray line by itself has proven an ineffective pressure control configuration with low temperature and pressure conditions.

Spray Valve Control

The PRZ spray valves may be operated in AUTO or MANUAL. In MANUAL, increase and decrease pushbuttons allow the operator to open or shut individual spray valves to regulate spray flow. In AUTO, both spray valve controllers receive a signal from the PRZ master pressure controller. The valves begin to open when the error signal output of the PRZ master pressure controller corresponds to +25 psi, or 2260 psig. They are fully open at +75 psi, or

b. Effects on the PZRPCS due to transfer to ACP

8. Given a set of plant conditions, PREDICT the response of the PRZPC and the effect on overall plant conditions with regard to the following functions:
   a. PZR code safety valves
   b. PZR high-pressure reactor trip
   c. PZR low-pressure reactor trip
   d. PZR low-pressure Safety Injection
   e. PZR control heaters
   f. PZR Backup heaters
   g. PZR spray valves
   h. PZR Power Operated Relief Valves (PORVs)
   i. PZR pressure permissive P-11
   j. Actual PZR pressure
   k. Sequencer program being active
   l. Pressurizer level decreasing below 17 percent
   m. Level restoration to above 17 percent
   n. PZR control high-level deviation

9. DESCRIBE how the Pressurizer Pressure Control is used in the response to, and mitigation of, events as described in the applicable AOP's.

10. STATE the Limiting Condition of Operation (not including the Actions) for the following Technical Specifications as they relate the Pressurizer Pressure Control System.
    a. 3/4.4.2, Safety Valves
    b. 3/4.3.1, Reactor Trip System Instrumentation
    c. 3/4.4.3, Pressurizer
    d. 3/4.4.4, Relief Valves
    e. 3/4.4.9.4, Overpressure Protection System
    f. 3/4.4.9.3, Pressurizer Temperature Limits
    g. 3/4.3.2, ESFAS Instrumentation
    h. 3/4.2.5, DNB Parameters

Given the following:

Initial Conditions

- The unit is at 55% power.
- PZR Pressure indicates 2200 psig and decreasing.
- All PORVs indicate closed. PORV Block Valves are open.
- Spray valve 1RC-103 indicator is RED and GREEN.
- Spray valve 1RC-107 indicator is GREEN.
- All pressurizer heaters are on.

Current Conditions

- The crew enters the appropriate AOP, but cannot correct the problem.
- RCS pressure has stabilized at 2145 psig.

Which ONE (1) of the following describes the action required, and the reason for the action?

A. Reactor trip is required because the Technical Specification minimum RCS pressure cannot be maintained. The actions of the applicable Technical Specification no longer apply in Mode 3.

B. RCP "A" must be tripped and a plant shutdown initiated to preclude operation outside of design basis in Mode 1.

C. Reactor trip is required because the Technical Specification minimum RCS pressure cannot be maintained. RCS pressure must be restored within 2 hours, or the unit placed in Cold Shutdown.

D. RCP "B" must be tripped and a plant shutdown initiated to preclude operation outside of design basis in Mode 1.

A is correct. For the current conditions, a reactor trip is required. The TS for DNBR is applicable in Mode 1 only.

B is incorrect. The RCP must be tripped but a reactor trip will precede the RCP trip, no shutdown. Precluding operation outside of design basis is plausible, since RCS pressure is below the minimum for DNBR.

C is incorrect although the action is correct. Reason is plausible because it represents the action required in Mode 1 for restoration of RCS pressure.

D is incorrect for same reason as B, and also wrong RCP to trip for the failed open spray valve

Question Number: 87

Tier 2 Group 1

Importance Rating: SRO 3.9

Technical Reference: AOP-019, TS 3.2.5
Proposed references to be provided to applicants during examination: None
Learning Objective: PZRPC Obj 9, 10
10 CFR Part 55 Content: 43.5, 43.2

Comments:

10CFR55.43(b).5 because the SRO must assess plant conditions and determine a cource of action. 10CFR55.43(b).2 because knowledge of technical specifications and their bases are being applied

010 A2.02
52087

INSTRUCTIONS	RESPONSE NOT OBTAINED
3.1 Pressure Control Malfunctions While Operating With a Pressurizer Bubble	
☐ **10. CHECK** at least ONE of the following conditions present: • PRZ pressure is UNCONTROLLED • Status of a normal Spray Valve or a PRZ heater bank is UNCONTROLLED	☐ **10. GO TO** Step 18.
☐ **11. CHECK** a normal Spray Valve FAILED FULL OR PARTIALLY OPEN.	☐ **11. GO TO** Step 15.
☐ **12. CHECK** that the failed normal Spray Valve prevents maintaining PRZ pressure above 2205 psig.	**12. PERFORM** the following: ☐ **a. IF** in Mode 1 or 2, **THEN CONTACT** Plant Management for a decision regarding continued plant operation. ☐ **b. GO TO** Step 15.
☐ **13. CHECK** Reactor power BELOW P-8.	**13. PERFORM** ALL of the following: ☐ **a. TRIP** the Reactor **AND GO TO** EOP Path-1. (Perform Steps 13.b through 13.d as time allows). ☐ **b. STOP** the RCP associated with the failed Spray Valve: • PCV-444C: Loop A • PCV-444D: Loop B ☐ **c. IF** PRZ pressure continues to drop in an uncontrolled manner **AND** falls BELOW 2000 PSIG **THEN STOP** additional RCPs. ☐ **d. EXIT** this procedure.

010A2.02
SR087

3/4.2.5 DNB PARAMETERS

LIMITING CONDITION FOR OPERATION

3.2.5 The following DNB-related parameters shall be maintained within the following limits:

a. Reactor Coolant System $T_{avg} \leq 594.8°F$ after addition for instrument uncertainty, and

b. Pressurizer Pressure $\geq$ 2185 psig* after subtraction for instrument uncertainty, and

c. RCS total flow rate $\geq$ 293,540 gpm after subtraction for instrument uncertainty.

APPLICABILITY: MODE 1.

ACTION:

With any of the above parameters not within its specified limit, restore the parameter to within its limit within 2 hours or reduce THERMAL POWER to less than 5% of RATED THERMAL POWER within the next 6 hours.

SURVEILLANCE REQUIREMENTS

4.2.5.1 Each of the parameters shown in Specification 3.2.5 shall be verified to be within its limit at least once per 12 hours.

4.2.5.2 Verify, by precision heat balance, that RCS total flow rate is within its limit at least once per 18 months.**

* This limit is not applicable during either a THERMAL POWER Ramp in excess of ±5% RATED THERMAL POWER per minute or a THERMAL POWER step change in excess of ±10% RATED THERMAL POWER.

** Required to be performed within 24 hours after $\geq$ 95% RATED THERMAL POWER.

010 A2.02
SR087

b. Effects on the PZRPCS due to transfer to ACP

8. Given a set of plant conditions, PREDICT the response of the PRZPC and the effect on overall plant conditions with regard to the following functions:
   a. PZR code safety valves
   b. PZR high-pressure reactor trip
   c. PZR low-pressure reactor trip
   d. PZR low-pressure Safety Injection
   e. PZR control heaters
   f. PZR Backup heaters
   g. PZR spray valves
   h. PZR Power Operated Relief Valves (PORVs)
   i. PZR pressure permissive P-11
   j. Actual PZR pressure
   k. Sequencer program being active
   l. Pressurizer level decreasing below 17 percent
   m. Level restoration to above 17 percent
   n. PZR control high-level deviation

9. DESCRIBE how the Pressurizer Pressure Control is used in the response to, and mitigation of, events as described in the applicable AOP's.

10. STATE the Limiting Condition of Operation (not including the Actions) for the following Technical Specifications as they relate the Pressurizer Pressure Control System.
    a. 3/4.4.2, Safety Valves
    b. 3/4.3.1, Reactor Trip System Instrumentation
    c. 3/4.4.3, Pressurizer
    d. 3/4.4.4, Relief Valves
    e. 3/4.4.9.4, Overpressure Protection System
    f. 3/4.4.9.3, Pressurizer Temperature Limits
    g. 3/4.3.2, ESFAS Instrumentation
    h. 3/4.2.5, DNB Parameters

010 A2.02
SRO 87

11. IDENTIFY the entry conditions and the required actions for the preceding PZRPCS Technical Specifications which require actions to be taken in one hour or less.

12. Given a copy of the appropriate section of the Technical Specifications, properly APPLY the preceding Technical Specifications and their bases (SRO only) to a given plant condition.

Given the following:

- The unit is at 100% power, steady state.
- PZR pressure transmitter PT-445 indicates 2280 psig and rising.
- PZR pressure transmitter PT-444 indicates 2245 psig and stable.

Which ONE (1) of the following describes the effect on the unit if the trend continues?

A. ONLY ONE (1) PZR PORV will open. Spray valves remain closed.

B. ✓ TWO PORVs will open. Spray valves remain closed.

C. Spray valves will open. ONLY ONE (1) PZR PORV will open.

D. Spray valves will open. TWO (2) PZR PORVs will open.

B is correct. PT-445 controls 2 PORVs but not spray valves. Spray and the other PORV are fed from the Master Controller, which is fed by PT-444.

A is incorrect because the single PORV is operated from the master controller, not PT-445.

C is incorrect because a PT-444 failure would cause this response. Plausible because an applicant can mistake pressure inputs to the master controller.

D is incorrect because a PT-444 failure would cause operation of Spray valves, although plausible because 2 PORVs will open for the conditions presented.

Knowledge of PZR PCS design feature(s) and/or interlock(s) which provide for the following: Over pressure control

Question Number: 9

Tier 2 Group 1

Importance Rating: RO 3.8

Technical Reference: AOP-019
Proposed references to be provided to applicants during examination: None
Learning Objective: LPAOP3-19 Obj 8
10 CFR Part 55 Content: 41.7

Comments:

010K4.03
RO-9

Figure 1 Pressurizer Pressure Control

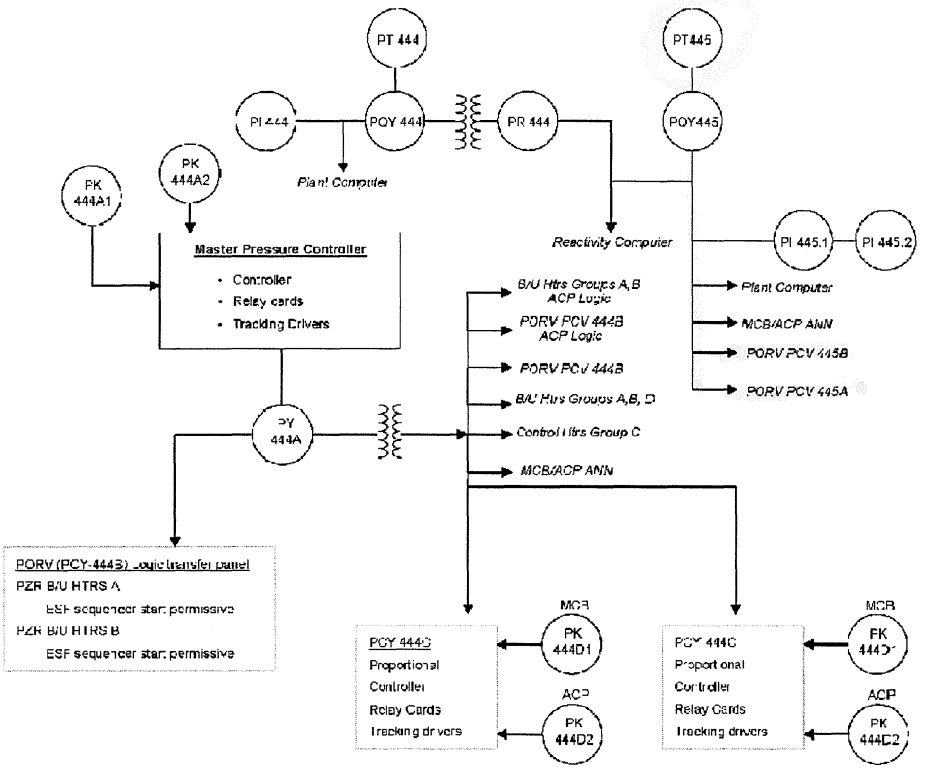

Design Function

PRESSURIZER PRESSURE CONTROL

The PRZPC System is designed to maintain or restore PRZ pressure to a band of 38 psi above to 50 psi below the design pressure of 2235 psig (2185 psig to 2273 psig) following normal operational transients that induce pressure changes by control (auto or manual) of heaters and spray in the PRZ. This band is within reactor trip and PRZ PORV and safety valve actuation setpoints. Thus, reactor trips resulting from pressure variations caused by operational transients are prevented. Additionally, the system provides steam relief by controlling the PRZ PORVs. (Ref. FSAR 7.7.1.3)

One of the primary functions of the PRZ is to provide a surge volume to accommodate expansion and contraction of the reactor coolant. When the RCS temperature increases, the reactor coolant expands causing an insurge into the PRZ. This insurge compresses the steam bubble at the top of the PRZ, causing pressure to increase. Since the PRZ is a saturated system, as the pressure increases and exceeds the saturation pressure, the steam will begin to condense. The liquid occupies approximately one-sixth the volume of the

010K4.03
RO-9

I. INTRODUCTION

Lesson Objectives TP

A. Lesson objectives

Upon completion of this lesson, the student should be able to

1. State the purpose of AOP-019, Malfunction of RCS Pressure Control
2. RECOGNIZE entry conditions that are associated with AOP-019, Malfunction of RCS Pressure Control
3. STATE the immediate operator actions required for AOP-019, Malfunction of RCS Pressure Control
4. Given a situation with a bubble in the pressurizer and a suspected malfunction in the Pressurizer Pressure Control System, EVALUATE the effect on the plant per AOP-019 and AOP-019 background document.
5. Given a situation in solid plant operation affecting charging, letdown, or RCS temperature, EVALUATE the effect on RCS pressure per AOP-019 and AOP-019 background document.

B. Reason for study

In order for the operator to safely operate the plant, a good working knowledge of the Abnormal Operating Procedures is required. The operator must know what to do in abnormal conditions to be able to return the plant to a normal operating configuration

II. PRESENTATION

A. Overview

1. AOP-019, Malfunction of RCS Pressure Control
   a. Immediate Actions
   b. Pressure Control Malfunctions while Operating with a Pressurizer Bubble
   c. Pressure Control Malfunctions during Solid Plant Operation
2. Industry events
3. Summary
4. Evaluation review

Instructor Notes

-AOP Basis Document should be made available to student.

During a LOCA, as RCS pressure and inventory are reduced, which ONE (1) of the following correctly describes:

(1) the major modes of core cooling during different size LOCAs, and
(2) the reason that reflux boiling occurs?

A. (1) Break Flow for SBLOCA; , Reflux Cooling for LBLOCA.
(2) RCS water is condensed on SG tubes and returns to the core via the **COLD** leg.

B✔ (1) Reflux Cooling for SBLOCA; Break Flow for LBLOCA.
(2) RCS water is condensed on SG tubes and returns to the core via the **HOT** leg.

C. (1) Reflux Cooling for SBLOCA; Break Flow for LBLOCA.
(2) RCS water is condensed on SG tubes and returns to the core via the **COLD** leg.

D. (1) Break Flow for SBLOCA; , Reflux Cooling for LBLOCA.
(2) RCS water is condensed on SG tubes and returns to the core via the **HOT** leg.

A. Incorrect. Incorrect sequence, and definition is incorrect due to description of cold leg uncovering
B. Correct. SBLOCA is where reflux occurs. When inventory is reduced so that Hot Leg openings are uncovered, reflux takes place. When inventory is further reduced due to the size of the opening, flow through the core is lost out of the break
C. Incorrect. Correct sequence, but cold leg not correct.
D. Incorrect. Incorrect sequence of phenomena

Knowledge of the reasons for the following responses as the apply to the Large Break LOCA: NC and PC.

Question Number: 42

Tier 1 Group 1

Importance Rating: RO 3.3

Technical Reference: LOCA Analysis, WOG BD E-1
Proposed references to be provided to applicants during examination: None
Learning Objective:
10 CFR Part 55 Content: 41.14
Comments:

Modified from Robinson 2007 exam. No items in WTSI bank

011 EK3.11 002

R042

2. DESCRIPTION

This section provides transient descriptions for a loss of reactor coolant and loss of secondary coolant in the two subsections that follow.

2.1 Loss of Reactor Coolant

In order to describe the various phenomena which can occur during a loss of reactor coolant accident (LOCA) it is convenient to define LOCA categories depending on approximate break size and safeguard equipment status (one train versus two train operation of the ECCS). The selected LOCA categories which will be described in this section are:

1) Breaks = 3/8" equivalent diameter hole. Normal charging flow maintains RCS inventory.

2) Breaks 3/8" < diameter <~ 1", minimum safety injection. RCS pressure stabilizes above steam generator pressure.

3) Breaks 3/8" < diameter <~ 1", maximum safety injection. Repressurization of RCS occurs.

4) Breaks 1" < diameter <~ 13-1/2" (1 ft^2). RCS pressure goes below steam generator pressure.

5) Breaks 1 ft^2 < Area = Double-Ended RCS Pipe Area. RCS rapidly depressurizes to values close to the containment atmospheric pressure.

In more general and familiar terminology with regard to the above categories, category 1 is an RCS leak, categories 2 through 4 are small break loss of coolant accidents, and category 5 is a large break loss of coolant accident. The intent of this section is to describe general LOCA phenomena which would be common to all Westinghouse plants with safety grade charging/SI pumps. It should be noted that the break size ranges stated above are approximations and are highly dependent on the safety injection system flow capability of the plant. For example, the categories listed above were developed for the reference plant. For a plant which has less safety injection delivery

capability than the plant analyzed, the limits of the break sizes would decrease uniformly. Therefore, the phenomena described for each category are of greater importance than the absolute magnitude of break size. This is consistent with actual operator response following a LOCA since the operators main decision point should be identifying the type of optimal recovery necessary rather than precisely identifying break location and size.

It also should be noted that the analysis transients presented in this section utilize design basis safety analysis assumptions. Besides single failure and loss of offsite power requirements, many analysis input parameters and modeling assumptions are utilized which yield conservative results for the purpose of calculating peak fuel clad temperature. Examples of these conservative inputs and modeling assumptions are: 1) all safety injection flow to the loop that contains the break is lost, 2) safety injection flow is conservatively degraded and minimized, 3) all automatic protection system signals include the maximum uncertainty (inaccuracy), 4) delivery of safety injection flow and auxiliary feedwater is conservatively delayed, 5) decay heat is based on ANS Standard for infinite operation with 20 percent margin, 6) reactor power is based on 102 percent of ESDR Power (ESDR power is typically 4.5 percent above licensed power), and 7) no control system operation is assumed (e.g., controlling steam generators to no-load). These transients are useful in describing the important phenomena which are occurring rather than actual transient response given more realistic assumptions. For example, if a break is not large enough to remove all the decay heat energy, then the primary side temperature must remain above the steam generator temperature in order to transfer heat. This phenomenon results in the primary pressure remaining above the secondary safety valve set pressure in the analysis transient. A more realistic transient is when the operator (or the automatic steam dump system) cools down the secondary below the safety valve set pressure. The phenomena observed in the SAR analysis transient are still valid but the detailed system response could be quite different. Therefore, it is important that the operator be aware of general phenomena, such as mass and energy relationships in the RCS, rather than concentrating on the exact transient calculated in the SAR analysis.

Not the case for LB LOCA

The majority of the information given below describing the loss of reactor coolant transient is based on small break analyses found in Reference 1.

Breaks ~ 1" < diameter <~ 13-1/2" (1FT^2)

For break sizes of one to two-inch in equivalent diameter, the RCS will rapidly depressurize early in the transient, and an automatic reactor trip and safety injection signal will be generated based on low pressurizer pressure. During the early stages of the depressurization, when the system is still full of two-phase liquid, the break flow, which also will be mostly liquid, is not capable of removing all the decay heat. Therefore, the early depressurization is limited by energy removal considerations, and the RCS pressure will temporarily hang up above the steam generator safety valve set pressure, assuming no steam dump is available. The RCS pressure stays at this level in order to provide a temperature difference from primary to secondary so that core heat may be removed by the steam generator. At this energy-balance controlled pressure, however, pumped safety injection flow is less than the break flow, and there is a net loss of mass in the RCS. Voiding throughout the primary side occurs and eventually the RCS begins to drain, starting from the top of the steam generator tubes. The rate of RCS drain is determined by the net loss of liquid inventory, a function of both SI flow and break size.

Prior to the occurrence of draining, heat is removed from the steam generator through continuous two-phase natural circulation, with two-phase mixture flowing over the top of the steam generator tubes. As the draining continues, the natural circulation mode of heat removal as just defined ceases, and core heat is removed through condensation of steam in the steam generator. This method of heat removal is called reflux and is discussed in Reference 2.

The condensation mode of heat removal is almost as efficient as continuous two-phase natural circulation in removing heat. However, condensation heat transfer coefficients may be lower than continuous two-phase natural circulation heat transfer coefficients. Thus, as the steam generator tubes drain, a slight increase in primary system pressure occurs to give a greater ?T from primary to secondary in order to remove all the decay heat. The steam generator secondary side pressurizes to the safety valve set pressure

WOG Background Doc.

Given the following:

- The unit is at 100% power.
- Unit electrical alignment is normal.
- Aux Bus 1E de-energizes and is locked out.

Which ONE (1) of the following describes an effect on the unit?

A. "C" RCP is deenergized

B. "A" CSIP is momentarily deenergized

C. "B" CSIP is momentarily deenergized

D. Cooling Tower Makeup Pump 1X is deenergized

A incorrect but plausiblebecause Bus 1A and 1B supply RCPs
B incorrect but plausible because losing Bus 1D will result in this effect
C correct. Bus 1E is the normal supply to 6.9 KV Bus 1B-SB. The charging pump is momentarily de-energized while the EDG comes up to speed and powers the bus. The Charging pump will be loaded on when required by the sequencer
D incorrect but plausible because it is powered from Bus 1D
Knowledge of bus power supplies to the following: Charging pumps

Question Number: 29

Tier 2 Group 2

Importance Rating: RO 3.1

Technical Reference: 6.9 KV Electrical Student Text pg 19/20
Proposed references to be provided to applicants during examination: None
Learning Objective: CVCS text Obj 2
10 CFR Part 55 Content: 41.5/7

Comments:

RO 29
011K201

Buses 1A and 1B also power the loads listed in the table below: Bus 1C powers only Reactor Coolant Pump (RCP) 1C.

Table 3: 1A & 1B Loads

Bus 1A and 1B Loads
Reactor Coolant Pump (RCP)
Main Feed Pump (MFP)
Condensate Pumps
Condensate Booster Pumps
Circulating Water Pumps (CWP) - 1B and 1C CWP both on bus 1B

Buses 1D and 1E power the loads listed below:

Table 4: 1D & 1E Loads

Bus 1D and 1E Loads
1A-SA (1D), 1B-SB(1E)
480V Load Centers (1D-1,-2, &-3 and 1E-1,-2, & -3)
Heater Drain Pumps
Normal Service Water Pumps
Cooling Tower Makeup Pump 1X (1D)
General Service Bus 1-4A

General Service Bus section 1 is powered from 1D via breakers 103 and 501. Section 2 is powered from 1E via breakers 123 and 503. The two sections of the General Service Bus can be cross-tied via bus tie breaker 502. This would allow either Bus 1D or 1E to carry both sections of the General Service Bus. Normally, breaker 502 is open and the two sections are split. General Service Bus 1-4A powers loads in the following areas:

1. Waste process building
2. Fuel handling building (non-safety loads)
3. Security building
4. Service and Outlying buildings
5. Switchyard

011K201
R029

Student Objectives

1. STATE the purpose and design function of the Chemical and Volume Control System (CVCS). **AO**

2. STATE the function, design bases, and power supplies of the CVCS major components. **AO**
   a. Charging / safety injection pumps including:
      - Speed changer gear drive function
      - Lubrication
      - Cooling water
      - Pump type and flow capacity
      - Normal lineup at power
   b. Heat Exchangers
   c. Volume Control Tank (VCT) including
      - Gas control
      - Configuration of level instrumentation **(RO Only)**
      - Bases for pressure, level and temperature limits **(RO Only)**
   d. Filters
   e. Orifices
   f. Excess letdown delay pipe
   g. Demineralizer subsystem including:
      - Types of resin used
      - Temperature effects on resin

3. DISCUSS potential modes of the CVCS component failures and relevant industry Operating Experience (OE).
   a. SOER 94-2, Boron Dilution Events in PWRs
   b. March 93 HNP CSIP shaft shear
   c. VCT level control failures that contribute to gas intrusion into the CSIPs.

20. 012 K5.01 001/BANK/HARRIS/LOWER//RO/HARRIS/7/2007/YES

Which ONE (1) of the following reactor trip signals provides protection against DNB (Departure from Nucleate Boiling)?

A. Power Range Flux

B. RCP underfrequency

C. High pressurizer level

D. Steam generator low-low water level

C is incorrect because High PZR level is a backup for High RCS pressure.
A is incorrect because Power Range flux is for overpower events, fuel degradation.
D is incorrect because SG LO-LO level is also a backup for RCS pressure transients
B is correct because RCS flow is a DNB parameter.

Knowledge of the operational implications of the following concepts as the apply to the RPS: DNB

Question Number: 11

Tier 2 Group 1

Importance Rating: RO 3.3

Technical Reference: TS 3.3.1 Basis, RPS Text
Proposed references to be provided to applicants during examination: None
Learning Objective: RPS Text Obj 12 and 14
10 CFR Part 55 Content: 41.5, 43.2

Comments:

Harris 2005 NRC

WTSI 52833

2 DNBR items on exam, both involve different parameters (1 pressure, 1 flow)

012K501
R011

REACTOR TRIPS

Source Range Reactor Trip

SR above 1 x 10^5 cps (1 of 2 logic)

Prevented by:

- That channel's Trip Bypass switch in BYPASS (note this switch normally only operated for testing or OWP's.)

or

- Either IR channel exceeding P-6 (1 x 10^{-10} amps) and then operating SR Block Control Switch

or

- Permissive P-10 >10%. P-10 blocks trip and high voltage to prevent inadvertent energization of SR.

Protects against excessive power excursions during start-up

Mitigates consequences of subcritical rod withdrawal accident

Protects personnel in containment during shutdown

Prevents power increase above SR without IR

Intermediate Range Reactor Trip

IR Current >25% power (1 of 2 channels).

Prevented by:

- Exceeding 10% power (P-10) and then operating IR Block Control Switch

If IR power is >20% and the IR Block Control Switch has not been operated then rod motion is blocked and an alarm will sound.

Power Range Low Power Reactor Trip

PR > 25% (2 of 4).

Prevented by:

- Exceeding 10% power (P-10) and then operating PR Block Control Switch

Note: Will receive an alarm if any 1 of the 4 PR channels >25% and the PR Block Control Switch has not been operated.

Power Range High Power Reactor Trip

PR > 109% (2 of 4)

There are NO blocks or bypasses for the High Power Reactor Trip.

- Rod stop at 103 percent on 1/4 logic

Power Range High Negative Flux Rate Trip

Protects from High Flux Peaking DNBR > 1.3

Decrease > 5 percent in two seconds on 2/4 channels

Single dropped rod, may return to power

DNBR/Peaking factors protection

RCS Loop Low Flow Trips

Setpoint 90.5 percent

Logic: Two of three loops below P-8, and above P-7 or one of three loops above P-8

Protects against DNB (inadequate flow to remove heat generated)

ΔT trips do not respond fast enough

Bypassed below 10 percent power (P-7) - While shutdown, heat removal can be accomplished by Natural Circulation capability

RCP Undervoltage Trip

Initiates at voltage below 5148 volts on 2/3 sensors

Protects against complete loss of flow

Blocked by permissive P-7 below 10 percent power

Sensors located on RCP motor side (senses trip of RCP circuit breaker)

RCP Underfrequency Trip

Initiates if frequency decreases below 57.5 Hz on 2/3 sensors

Ensures forced flow during pump coast down

Automatically blocked below P-7

Sensors located on RCP motor side (senses trip of RCP circuit breaker)

Low Pressurizer Pressure Trip

Setpoint: 1960 psig; 2/3 logic; Trip is rate sensitive

Protects against excessive void formation and DNB

Limits range of OTΔT trip

Bypassed below 10 percent power, automatic, Permissive P-7

Permits S/D and C/D with shutdown banks withdrawn

High Pressurizer Level

Setpoint 92 percent; 2/3 logic

Backup to high pressure trip

Protects PRZ safeties and piping from water hammer

Bypassed below 10 percent power (P-7), allows cold (solid) plant operations

High Pressurizer Pressure Trip

Setpoint 2385 psig; 2/3 logic

Protects RCS from overpressure

50 psig Above PORV setpoint

Prevent unnecessary lifting of PRZ safeties

Reactor trip on safety injection

Limits severity of Safety Injection (SI) initiating accidents (Loss of coolant, Steam line break)

Safety Injection auto-actuation setpoints:

- PRZ pressure < 1850 psig (blocked < P-11)
- Main Steam pressure < 601 psig (rate compensated, blocked < P-11)
- Containment pressure > 3 psig (cannot be blocked)

Reactor Trip following Turbine Trip

Turbine trip above 10 percent power

Auto stop oil pressure (two of three logic) 1150# (ASTs 63-3, 4, & 5)

All four turbine stop valves closed (< 1 percent open)

Enabled above P-7 (10 percent power)

Anticipatory - prevents overtemperature, overpressure conditions due to turbine trip (loss of load)

OTΔT and high pressure trips only terminate transient

Low-low Steam Generator (SG) level trip

Setpoint: 25 percent of narrow range, 2/3 logic

Protects against loss of heat sink

Sustained steam/feed flow mismatch

Steam generator boil dry

RCS overpressure/overtemperature excursion

Low SG Level-Low Feedwater Flow Trip

1 of 2 level channels < 25% (narrow range) on any S/G

and

Steam flow > feed flow (in same S/G) by 40 %

Protects for anticipated loss of heat sink

Overtemperature Differential Temperature (OTΔT) Trip

Compares Loop ΔT to setpoint ΔT (2/3)

Provides DNB Protection

Setpoint based on

- Tavg
- Pressurizer Pressure
- Axial flux difference

Setpoint varies based on penalties or rewards as parameters vary from a nominal full power value

Rod stop and turbine runback: 3 percent less than trip

Overpower Differential Temperature (OPΔT) Trip

Compares Loop ΔT to setpoint ΔT (2/3)

Provides assurance of fuel integrity by limiting fuel rod power density under all overpower conditions

Setpoint based on

- Tavg
- Rate of change of Tavg
- Setpoint varies based on penalties as parameters vary from a nominal full power value

Rod stop/turbine runback: 1.9 percent less than trip

REFERENCES

OP-103 Reactor Protection System http://nggweb/HNPpassportdm/Pom/OP-103.pdf

FSAR 7.3 Engineered Safety Features System http://nggweb/HNPSITE/Fsarmast/7-3%20Engineered%20Safety%20Features%20System.pdf

DBD 301 Reactor Control and Protection http://nggweb/HNPsite/Dbd/DBD-301.pdf

Tech Specs http://nggweb/HNPSITE/HumanPerformance/Harris_Tech_Specs.pdf

CWD for ESF (6-B-401-0585 thru 6-B-401-0620) http://nggweb/HNPpassportdm/Drw/CWD/6-B-401%200585.TIF

Diversification
Redundancy
Independent
Failsafe
Testable

For Training Purposes Only

b. Blocking or defeating a Reactor Trip function.

c. Bypassing AMSAC

6. IDENTIFY associated remote and local instrumentation, indications, alarms, and controls for the RPS and AMSAC, including:
   a. Plant labeling colors associated with Instrument buses
   b. Plant labeling colors associated with Safety buses
   c. Indications available for diagnosing a SSPS train General Warning Alarm
   d. AMSAC panel RESET
   e. Diaganosis of which reactor tip signals, permissives, or control interlocks are active

7. STATE the interlocks, permissives, and automatic control functions of the RPS and AMSAC, and the basis for each.

8. Given a set of plant conditions, PREDICT the response of the RPS and AMSAC including the effect on overall plant conditions with regard to automatic control functions, signals, and interlocks.

9. DESCRIBE the interrelationships (physical connections, design functions, flow paths) between RPS, AMSAC, and other plant systems.

10. DESCRIBE how the Reactor Protection System is used in the response to, and mitigation of, events as described in the applicable AOPs and EOPs, including: Expected Operator response on an Anticipated Transient Without a Scram (ATWS)

11. Given a set of plant conditions, PREDICT the response of the RPS or AMSAC and the effects on overall plant operations for major component failures/malfunctions, including:
    a. Loss of power to SSPS input relays
    b. Loss of power to SSPS slave relays
    c. An open circuit in the reactor trip breaker shunt trip coil

12. STATE the Limiting Condition of Operation (not including the Actions) for the following Technical Specifications as they relate to the RPS.
    a. 2.1.1, Reactor Core
    b. 2.1.2, Reactor Coolant System Pressure

012K5.01
R011

c. 3.3.1, Reactor Trip System Instrumentation

13. IDENTIFY entry conditions and required actions for the RPS Technical Specifications that require actions to be taken in one hour or less.

14. Given a copy of the appropriate section of the Technical Specifications, properly APPLY the following Technical Specification and their bases (SRO only) to a given plant condition.

    a. 2.1.1, Reactor Core

    b. 2.1.2, Reactor Coolant System Pressure

    c. 2.2.1, Reactor Trip System Instrumentation Setpoints

    d. 3.3.1, Reactor Trip System Instrumentation

21. 013 K1.12 002/BANK/HARRIS/HIGHER//RO/HARRIS/7/2007/YES

Given the following:

- The unit is operating at 25% power.
- Emergency Diesel Generator (EDG) 1A-SA is loaded to 3800 KW while operating in parallel with the grid during the performance of OST-1013, 1A-SA Emergency Diesel Generator Operation.

If a loss of offsite power occurs, EDG 1A-SA output breaker would ...

A. remain closed; the sequencer will initiate load stripping; verify automatic load sequencing occurs when load stripping is complete.

B. remain closed; trip the EDG to initiate load stripping and sequencing.

C. open and then reclose to allow the sequencer to load. Verify automatic load sequencing occurs .

D. open and remain open. Reset and restart the EDG to initiate automatic load sequencing.

C is correct. DG Sequencer will initiate a trip of the DG output breaker when off-site power is lost. Once the breaker is open, the sequencer starts its process for reclosing the breaker and placing appropriate loads on the bus

A is incorrect because the breaker will open. Plausible because the breaker is already closed, and all actions are correct except for the EDG breaker

B is incorrect because the breaker will open. This action may have to be taken only if additional failures are present, such as the sequencer not performing its function

D is incorrect. Plausible since the EDG was running in the first place. The EDG would have to be reset if the emergency stop feature was used. In this case, an auto start would be generated by the sequencer

Knowledge of the physical connections and/or cause-effect relationships between the ESFAS and the following systems: ED/G

Question Number: 12

Tier 2 Group 1

Importance Rating: RO 4.1

Technical Reference: OP-155
Proposed references to be provided to applicants during examination: None
Learning Objective: EDG text obj 8
10 CFR Part 55 Content: 41.7

Comments:
Modified distractors

trip interlock to breaker 105/125 blocked. This forces the 86UV start of the EDG and tripping of the tie breaker. Actual closure of the 52Sb contact occurs slightly after closure of the 86UV contact in the DG circuitry.

- Load shed all breakers from ESF buses occurs except for 6.9 KV breaker feeding 480V power center 1A2-SA and 1B2-SB.

- EDG breaker closes to re-energize bus when D/G voltage and speed conditions are met(note - other permissives for automatic closure are met before D/G conditions are established). If D/G operating unloaded, EDG breaker closes when time delay of 1.5 seconds has expired (PG/SA and PG/SB relays pick-up).

- The Bus Under-voltage and lock-out relays reset allowing closure of 6.9 KV breaker feeding Station Service Transformer 1A3-SA and 1B3-SB to close after a 0.5 second time delay.

- The D/G Auto Start & Protection Bypassed signal is locked in by safety tiebreaker 52Sb contacts in the D/G circuitry.

- LOSP Signal Generation with D/G in Parallel with Off-site Power:

- During EDG testing (parallel to grid), if breaker 101(121) and 102(122) open OR if breaker 101(121) and either main generator lockout trip, the safety bus tie breaker 105(125) and the EDG output breaker 106(126) will trip. If the logic fails to trip the EDG output breaker, then an operator shall trip manually.

- The EDG is unloaded when one or more D/G Overcurrent relays operate or the Safety Bus Under-voltage relays operate to trip the bus 86UV relay, tripping the DG breaker (106 and 126).

- EDG receives an emergency start signal (86UV) and load shed of all breakers from ESF buses except 6.9 KV breaker feeding 480V power center 1A2-SA and 1B2-SB occurs.

- EDG breaker re-closes when time delay of 1.5 seconds has expired (PG/SA and PG/SB relays pick-up) since D/G is operating.

013 K1.12
R012

d. The Diesel Generator Building Ventilation system.

8. STATE the interlocks, permissives, and automatic control functions of the DE, and the basis for each, including: **AO**
   a. Five emergency trips, including setpoints where applicable, and the reference which lists the requirements to reset each.
   b. Three causes of an EDG emergency start/run signal.
   c. The effects on the EDGs protection system of EDG emergency start/run signal.
   d. The response of the EDG output breakers to an EDG emergency start/run signal. **(RO Only)**
   e. Conditions that will cause automatic start of the EDG auxiliary lube oil pump and fuel oil transfer pump.

9. Given a set of plant conditions, PREDICT the response of the DE and the effect on overall plant conditions with regard to automatic control functions, signals, and interlocks. **AO**

10. DESCRIBE the interrelationships (physical connections, design functions, flow paths) between the DE and other plant systems, including: **AO**
    a. Emergency Service Water

11. DESCRIBE how the Diesel Engine and Support Systems is used in the response to, and mitigation of, events as described in the applicable AOPs and EOPs. **AO**

12. Given a set of plant conditions, PREDICT the response of the DE and the effects on overall plant operations for major component failures/malfunctions. **AO**

13. STATE the Limiting Condition of Operation (not including the Actions) for the following Technical Specifications as they relate to the DE.
    a. 3.8.1.1 - AC Sources Operating
    b. 3.8.1.2 - AC Sources Shutdown

14. IDENTIFY entry conditions and required actions for the DE Technical Specifications that require actions to be taken in one hour or less.

22. 013 K5.01 001/NEW//LOWER//RO/HARRIS/7/2007/NO

Which ONE (1) of the following describes the MINIMUM required logic for MANUAL actuation of the Containment Spray system?

A. Either of 2 switches on 1 train deenergizes to actuate that train ONLY.

B. Both switches of 1 train deenergize to actuate that train ONLY.

C. Either of 2 switches on both trains energizes to actuate both trains.

D. Both switches on 1 train energize to actuate both trains.

D is correct. 4 channels of spray. (2 channels per train) To initiate, must operate 2 switches on left or 2 on right (BOTH switches from either train) Spray is energize to actuate.
A and B are incorrect because spray is energize to actuate. Plausible because all other ESF functions are deenergize to actuate
C is incorrect because only 1 switch will not actuate spray
Knowledge of the operational implications of the following concepts as they apply to the ESFAS: Definitions of safety train and ESF channel

Question Number: 13

Tier 2 Group 1

Importance Rating: RO 2.8

Technical Reference: CSS text
Proposed references to be provided to applicants during examination: None
Lesson Objective: CSS Text Obj 4
10 CFR Part 55 Content: 41

Comments:

RO Q.13

013 K501

System Operation

Modes of Operation

The CSS has two principle modes of operation. These are:

1. The initial injection mode, during which time the CSS sprays borated water which is taken from the RWST (sodium hydroxide is introduced through the eductors).

2. The recirculation mode which is initiated when a low-low level (23.4%) is reached in the RWST. Pump suction is automatically transferred from the RWST to the containment recirculation sump.

SYSTEM ACTUATION

The CSS receives two signals from the Engineered Safety Features Actuation System (see ESFAS Student Text) which are essential for system actuation. The two signals are the Phase 'A' Containment Isolation Signal ('T' Signal) and the Containment Spray Actuation Signal (CSAS). Before CSS operation may begin, a certain system lineup must be present. An abnormal CSS lineup would only occur during system testing. The Phase A 'T' signal assures the presence of this lineup by automatically actuating (if necessary) the following components:

- Containment Spray Pumps - If running, upon receipt of the 'T' signal with associated recirc valve open, the pumps will stop.

- Containment Spray Recirculation Valves (1CT-47 and 1CT-95) - If the CSS is being tested, these valves will be open to provide a flow path back to the RWST. Upon receipt of a 'T' signal they will close.

- Containment Spray Eductor Test Valves (1CT-24 and 1CT-25) - A 'T' signal will close these valves if they are open for eductor testing.

The CSAS is the actuating signal for the containment spray system. CSAS is one of the few energize-to-actuate ESFAS signals. CSAS is an energize-to-actuate signal to prevent inadvertent actuation, for example upon loss of power to SSPS. Containment cleanup and component repair or evaluation from an inadvertent containment spray actuation could result in a lengthy plant recovery. This signal can be initiated by either of two means:

- Manually - There are four momentary control switches for the manual initiation of the CSAS. Initiation of the CSAS will occur when two

RO Q.13
013KS.01

associated control switches (left two or right two) are operated simultaneously. .

- Automatically - Automatic initiation will occur at a containment pressure of 10 psig (Hi-3 signal) on two out of four instrument channels.

Two containment spray reset switches are provided on the MCB. If the operating crew determines that the CSAS initiation was inadvertent, they may reset both CSS trains (one reset for each train), which would allow terminating containment spray with an automatic CSAS present. This will minimize the amount of caustic water entering containment.

INJECTION MODE

Upon receipt of the CSAS, the injection mode of operation begins. The CSAS will automatically start the containment spray pumps and open the following valves:

- Containment Spray Headers Isolation Valves (1CT-50 and 1CT-88). Valve open signal lasts 20 seconds (valves continue to open if <100 percent open after 20 seconds).

- Containment Spray Chemical Additive Valves (1CT-11 and 1CT-12).

If a Containment Spray actuation signal is initiated while the Spray Pump Recirc Valve (1CT-47/1CT-95) is open, the associated Containment Spray Pump will not start. The Containment Spray Actuation Signal must be reset before the Containment Spray Pump can be manually started.

During the injection mode, the CSS pumps take suction from the RWST. Concurrent with the pump starts, the 28 to 30 wt percent sodium hydroxide solution will be drawn through the eductors and mixed with the 2400 - 2600 ppm boric acid solution from the RWST. The NaOH passes through: FT-7152B, 1CT-12 (1CT-11), 1CT-118 (1CT-119) to the eductor. Flow then passes PT-7131A-SA (PT-7131B-SB) safety-related pressure transmitters that indicate on the computer and MCB. The borated water flows through the cavitating venture, FT-7122A-SA (FT-7122B-SB) 1CT-50 (1CT-88), and locked open valve 1CT-56 (1CT-94) to spray headers and nozzles. The CSS will operate in this manner until it automatically switches to the recirculation mode.

5. CSS Pump Recirc Valves (1CT-47 SA/1CT-95 SB) - The valves are normally shut and de-energized. The valves are opened by the operator during surveillance testing to align the CSS pump discharge to back to the RWST. The valves automatically shut on Phase A actuation to restore the CSS to its standby alignment.

6. CSS Eductor Test Valves (1CT-24 SA/1CT-25 SB) - The valves are normally shut, but are opened by the operator during surveillance testing to align the RWST to the CSS eductors. The valves auto shut on Phase A actuation to restore the CSS to its standby alignment.

7. Manual Containment Spray Actuation Switches - Two position normal-actuate switches (spring return to normal). There are 2 sets of actuation switches, with 2 switches per set. Both switches in a given set must be placed in actuate to initiate a manual CSAS. Actuating either set (left set or right set) of switches will actuate both CSS trains.

8. Containment Spray Actuation Reset Switches - Two position normal-reset switches (spring return to normal). There is one switch to reset each train of CSAS.

Power Supplies	
1CT-12	1A21-SA-9C
1CT-11	1B21-SB-8A
1CT-24	1A21-SA-4A
1CT-25	1B21-SB-10E
1CT-26	1A21-SA-10B
1CT-71	1B21-SB-7B
1CT-50	1A21-SA-10C
1CT-88	1B21-SB-7C
1CT-47	1A21-SA-12B
1CT-95	1B21-SB-9A
1CT-105	1A21-SA-8C
1CT-102	1B21-SB-6A

CSS MCB INDICATIONS

The following indications are available for the CSS on the MCB:

- RWST Level (LI-0990 SA/LI-0991 SB/LI-0992/LI-0993) - Provides 0-100% RWST level indication. LI-0990 SA & LI-0991 SB are post accident monitors (PAM).

- Spray Additive Tank Level (LI-7150 SA/LI-7166 SA) - Provides 0-100% CSAT level indication. Both are PAM.

- Containment Sump Narrow Range Level (LI-7160A SA/LI-7160B SB) - Provides 0-100 % level indication. Both are PAM.

TRAIN A.

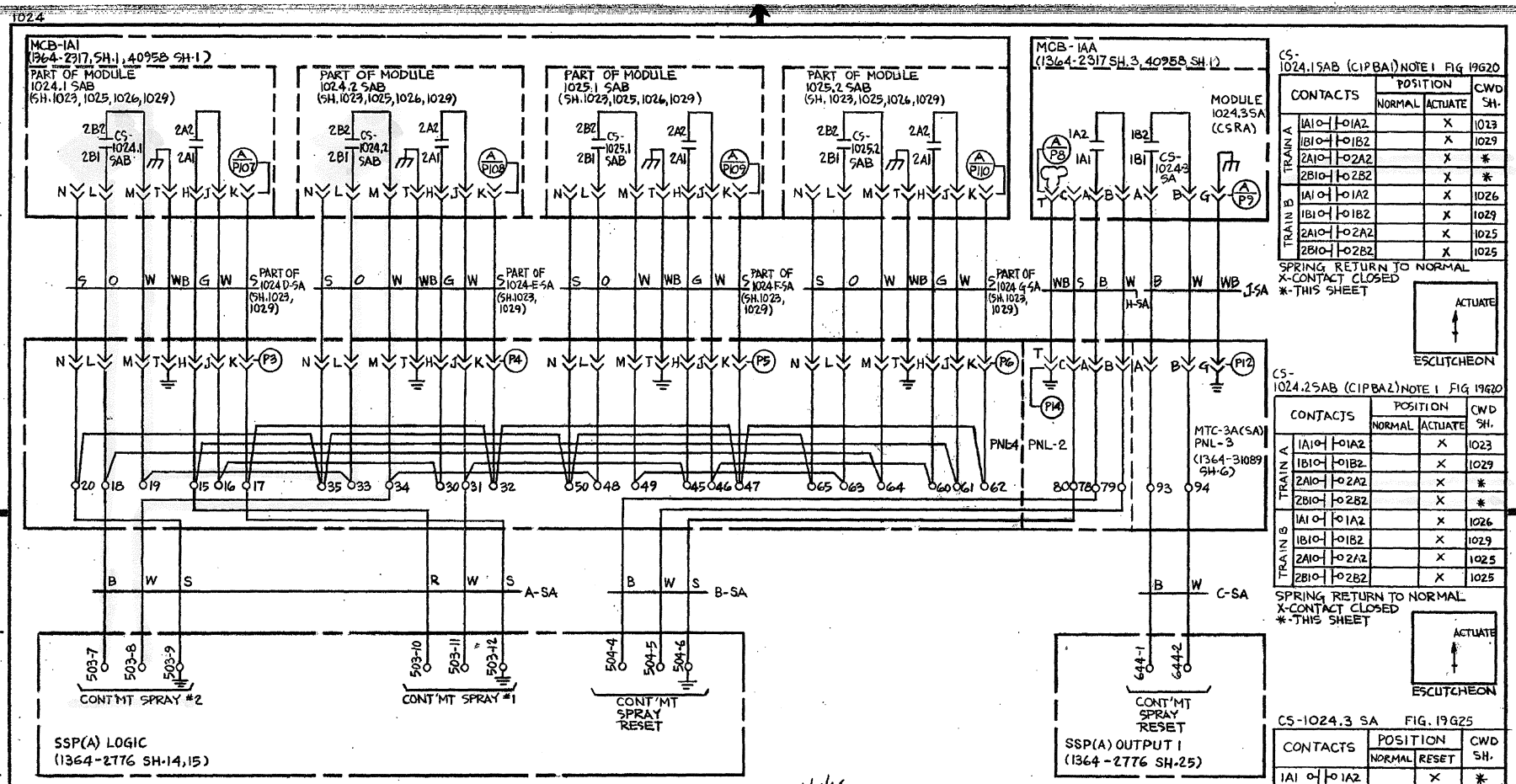

CS-1024.1SAB (C1PBA1) NOTE 1 FIG 19G20

	CONTACTS	POSITION NORMAL	POSITION ACTUATE	CWD SH.
TRAIN A	1A1 O-|-O 1A2		X	1023
	1B1 O-|-O 1B2		X	1029
	2A1 O-|-O 2A2		X	*
	2B1 O-|-O 2B2		X	*
TRAIN B	1A1 O-|-O 1A2		X	1026
	1B1 O-|-O 1B2		X	1029
	2A1 O-|-O 2A2		X	1025
	2B1 O-|-O 2B2		X	1025

SPRING RETURN TO NORMAL
X-CONTACT CLOSED
*-THIS SHEET

ACTUATE
ESCUTCHEON

CS-1024.2SAB (C1PBA2) NOTE 1 FIG 19G20

	CONTACTS	POSITION NORMAL	POSITION ACTUATE	CWD SH.
TRAIN A	1A1 O-|-O 1A2		X	1023
	1B1 O-|-O 1B2		X	1029
	2A1 O-|-O 2A2		X	*
	2B1 O-|-O 2B2		X	*
TRAIN B	1A1 O-|-O 1A2		X	1026
	1B1 O-|-O 1B2		X	1029
	2A1 O-|-O 2A2		X	1025
	2B1 O-|-O 2B2		X	1025

SPRING RETURN TO NORMAL
X-CONTACT CLOSED
*-THIS SHEET

ACTUATE
ESCUTCHEON

CS-1024.3 SA FIG. 19G25

CONTACTS	POSITION NORMAL	POSITION RESET	CWD SH.
1A1 O-|-O 1A2		X	*
1B1 O-|-O 1B2		X	*

SPRING RETURN TO NORMAL
X-CONTACT CLOSED
*-THIS SHEET

RESET
ESCUTCHEON

Effective as of 6/22/84, full responsibility for the maintenance of this drawing and for subsequent modifications made or required to be made to this drawing is assumed by Carolina Power & Light Company ("CP&L"). Ebasco Services Incorporated has no responsibility for maintenance and modifications after said date. All Field Change Requests, Design Change Notices and Non-Conformance Reports, which have been considered for the current or prior revisions of this drawing, are identified on this drawing if applicable, or are identified in the Drawing Control Log issue (current at the above date), if not applicable. Future revisions of this drawing will be issued by CP&L.

REF DWG: LOGIC DIAGRAM CAR-2166, G-423

NUCLEAR SAFETY RELATED

APPROVED FOR CONSTRUCTION	REV	DATE	BY	CK	APPROVED
RI:CE-03039, 1-17-75	5	1/23/85	JF	HGB	
CP&L-HPES FIELD DWG REV	4	4-30-82			
	3	2-27-81			
	2	1/24/79			
	1	3/3/75			

REV	DATE	BY	APPROVED

EBASCO SERVICES INCORPORATED
DIV. I & C DR. P.T.
CH. JH
DATE NOV. 27, 1974
APPROVED

CAROLINA POWER & LIGHT CO.
SHEARON HARRIS NUCLEAR P.P.
UNIT NO.1
CONTROL WIRING DIAGRAM
CONTAINMENT SPRAY ACTUATION TRAIN A

CAR 2166
B-401
SHEET 1024

FCR I 2078

20 Q.13
013KS.01

Student Objectives

1. STATE the purpose and design function of the Containment Spray System (CSS). **AO**

2. STATE the function of the following major CSS components. **AO**
   a. Containment spray pumps (include power supply)
   b. Containment spray additive tank
   c. Containment recirculation sumps
   d. Refueling water storage tank
   e. Spray header rings/nozzles
   f. Spray eductors
   g. Cavitating Venturis
   h. System Valves

3. DESCRIBE the modes of operations and major flowpaths of the CSS in accordance with plant operating procedures. **AO**
   a. Injection Phase
   b. Recirculation Phase
   c. Flow testing

4. DESCRIBE the indications and controls for the CSS including:
   a. Manual actuation of CSAS
   b. Reset of CSAS

5. STATE the conditions that will cause a Containment Spray Actuation Signal (CSAS) including coincidence and setpoints.

6. Given a set of plant conditions, PREDICT the response of the CSS and the effect on overall plant conditions with regard to the following automatic control functions, signals, and interlocks:
   a. Containment Spray Actuation Signal (CSAS)
   b. Phase A Isolation
   c. Spray Additive Tank Empty

Given the following:

- The unit is at 75% power.
- "B" RCP Oil Reservoir level HIGH alarm is received.
- The crew enters AOP-014, Loss of Component Cooling Water.
- The RO determines that RCP "B" Pump and Motor Bearing temperatures are all rising slowly, and currently indicate approximately 155 degrees F.
- CCW Surge Tank level is slowly lowering.

Which ONE (1) of the following describes the event in progress and actions required in accordance with AOP-014?

A. CCW is leaking into the RCP Oil Reservoir; isolate CCW to "B" RCP; reduce power to below the P-8 setpoint; trip RCP "B".

B.✔ CCW is leaking into the RCP Oil Reservoir; Isolate CCW to all RCPs; trip the reactor.

C. CCW has isolated to the RCP bearing oil coolers; reduce power to below the P-8 setpoint; trip RCP "B".

D. CCW has isolated to the RCP bearing oil coolers; Verify bearing oil cooling valve lineup and start the RCP Bearing Lift Pump to aid in lubrication, and attempt to restore CCW.

A is incorrect. Cannot isolate CCW to 1 RCP without making a containment entry, and the RCP would be tripped after a reactor trip, not a plant shutdown followed by RCP trip

B is correct. With CCW surge tank level lowering and oil reservoir high, there is a leak. The only way to isolate the leak is to isolate CCW. If CCW will be isolated, the crew is directed to trip the reactor

C is incorrect because the reactor is required to be tripped, and the indication is of a leak, not an isolation.

D is incorrect but plausible. Action IAW AOP-018 is to start the lift oil pump and check valve alignment. Would commence power reduction if oil reservoir was low

Question Number: 43

Tier 1 Group 1

Importance Rating: RO 3.0

Technical Reference: AOP-014
Proposed references to be provided to applicants during examination: None
Learning Objective: LPAOP3-14 Obj 2
10 CFR Part 55 Content: 41.10

Comments:

RO 43 015 AK302

INSTRUCTIONS	RESPONSE NOT OBTAINED

3.2 Leakage From CCW System

NOTE

The GFFD and RCS sample panel will isolate on low CCW Surge Tank level of less than or equal to 40%.

✱☐1. **MAINTAIN** CCW Surge Tank level between 45% and 75% using 1DW-15, CCW Make Up.

NOTE

An affected CCW Pump is one to which any of the following apply:

- Less than 4% level indicated on the CCW Surge Tank
- Exhibits abnormal flow
- Aligned to an affected Train pump through the non-essential header

✱☐2. **CHECK** BOTH of the following conditions exist: • ALL operable CCW Surge Tank level indicators are greater than 4% • CCW Pump flow indication is NORMAL	☐2. **PLACE** AND **HOLD** the control switch for ALL affected CCW Pumps to STOP until CCW header pressure is less than 52 psig.
☐3. **CHECK** EITHER RHR Train in Shutdown Cooling Mode.	☐3. **GO TO** Step 8.
✱☐4. **CHECK** that a rapid loss of CCW inventory is in progress that threatens Loss of Shutdown Cooling.	☐4. **GO TO** Step 8.

015 AK 3.02
R043

INSTRUCTIONS	RESPONSE NOT OBTAINED

3.2 Leakage From CCW System

☐**7.** **VERIFY** Both CCW Trains are isolated from the non-essential header:

a. Train A:

☐ • **VERIFY SHUT** 1CC-99, CCW Heat Exchanger A To Nonessential Sup

☐ • **VERIFY SHUT** 1CC-128, CCW Nonessential Return To Header A

b. Train B:

☐ • **VERIFY SHUT** 1CC-113, CCW Heat Exchanger B To Nonessential Sup

☐ • **VERIFY SHUT** 1CC-127, CCW Nonessential Return To Header B

☐**8.** **CHECK** RCS temperature greater than 200°F.

☐**8.** **GO TO** Step 10.

☐**9.** **CHECK** the Non-Essential header affected or previously isolated (insufficient flow, known to be the leak source, or other indication).

☐**9.** **GO TO** Step 10.

a. **VERIFY SHUT** the following valves:

☐ • 1CS-7, 45 gpm Letdown Orifice A

☐ • 1CS-8, 60 gpm Letdown Orifice B

☐ • 1CS-9, 60 gpm Letdown Orifice C

☐ • 1CS-460, Excess Letdown

(Continued on Next Page)

015 AK3.02
R043

INSTRUCTIONS	RESPONSE NOT OBTAINED

3.2 Leakage From CCW System

9. (continued)

- ☐ • 1CS-461, Excess Letdown
- ☐ • 1CS-28, RHR Letdown (HC-142.1)
- ☐ • 1SP-948 SB, RCS Loop B & C Hot Leg Cnmt Isol
- ☐ • 1SP-949 SA, RCS Loop B & C Hot Leg Cnmt Isol
- ☐ • 1SP-40 SB, Pressurizer Liquid Sample Isol
- ☐ • 1SP-41 SA, Pressurizer Liquid Sample Cnmt Isol
- ☐ • 1SP-59 SB, Pressurizer Stm Space Sample Isol
- ☐ • 1SP-60 SA, Pressurizer Stm Space Sample Isol

b. ISOLATE Charging flow as follows:

☐ **(1) PLACE** controller FK-122.1, Charging Flow, in MANUAL AND SHUT.

☐ **(2) SHUT** 1CS-235 SB, Charging Line Isolation.

☐ **(3) SHUT** 1CS-238 SA, Charging Line Isolation.

(Continued on Next Page)

INSTRUCTIONS	RESPONSE NOT OBTAINED

3.2 Leakage From CCW System

9. (continued)

> **NOTE**
>
> The intent of the following step is to stop the running CSIP if the potential exists for over pressurizing the RCS.

c. CHECK that ONE of the following EXISTS:	☐ **c. STOP** the running CSIP.
☐ • Bubble in the PZR	
☐ • RPV Head removed or detensioned	
☐ • RCS vented per Tech Specs	
☐ **10. CHECK** CCW lost to ANY operating RHR Train:	☐ **10. GO TO** Step 11.
☐ **a. VERIFY** affected RHR pump STOPPED.	
☐ **b. REFER TO** AOP-020, Loss of RCS Inventory or Residual Heat Removal While Shutdown. (Continue with this procedure, as time permits.)	

INSTRUCTIONS	RESPONSE NOT OBTAINED

3.2 Leakage From CCW System

CAUTION

Operation of RCPs for greater than 10 minutes without CCW cooling to the motor oil coolers may result in RCP bearing damage.

✱☐**11. CHECK** CCW expected to be lost for greater than 10 minutes.	☐**11. GO TO** Step 12.
☐ **a. CHECK** the Reactor is TRIPPED.	☐ **a. TRIP** the Reactor **AND GO TO** EOP PATH-1. (Continue with this procedure as time permits.)
☐ **b. STOP** ALL running RCPs. **[A.1, 2]**	

CAUTION

Reactor Makeup Water Tank contains potentially tritiated water. Making up to the CCW System from the Reactor Makeup Water Tank could result in CCW System contamination. Operation of the system while it is contaminated requires an evaluation per 10CFR50.59. **[C.2, 3]**

✱☐**12. CHECK** CCW Surge Tank level STABLE OR RISING.	**12. IF** Reactor Makeup Water is needed to maintain Surge Tank level greater than 4%, **THEN PERFORM** the following (while continuing with this procedure):
	☐ **a. VERIFY** one RMW pump RUNNING.

(Continued on Next Page)

015AK3.02
R043

INSTRUCTIONS	RESPONSE NOT OBTAINED

3.2 Leakage From CCW System

12. (continued)

b. DISPATCH an operator to perform the following:

☐ **(1) UNLOCK** AND **SHUT** 1CC-122, RMWS Supply To CCW Drain. (A-253-C15-W1-S3)

☐ **(2) OPEN** 1PM-61, RMW To Comp Cooling Water Isol Vlv. (A-254-C15-W4-S3)

☐ **(3) OPEN** 1CC-121, RMWS Supply To CCW Isol. (A-251-C15-E3-S3)

☐ **c. MONITOR** the following CCW Radiation Monitors:

- REM-01CC-3501ASA, CCW Train A
- REM-01CC-3501BSB, CCW Train B

d. IF necessary to continue CCW operation with the system contaminated,
THEN PERFORM the following:

☐ **(1) NOTIFY** Licensing/Regulatory Programs.

☐ **(2) REQUEST** initiation of an evaluation of CCW operation per 10CFR50.59. **[C.3]**

015 AK 3.02
RO 43

INSTRUCTIONS	RESPONSE NOT OBTAINED

3.2 Leakage From CCW System

NOTE

- If the leak location is known, non-applicable steps (Steps 14 through 20) are not required to be performed.
- If the leak location is not known, the Unit SCO may direct performance of Steps 14 through 20 in any order. Steps 21 and 22 directing diagnostic and walkdown may be useful in determining leak location and may be performed prior to or in parallel with Steps 14 through 20.
- Increased leakage may be indicated by higher indicated levels, higher level controller setpoints, annunciators, evolutions in progress, notification by personnel, Chemistry sample results or other means.
- RCDT in-leakage is indicated by increased level controller output.

✱13. **CHECK** the following for increased leakage
AND **GO TO** the applicable Step(s).

	Component	Step(s)	Page
☐	Atmosphere	14	22
☐	VCT	15	22
☐	RCDT	16	23
☐	Fuel Pools	17	25
☐	RCP Oil Reservoirs	18	25
☐	RHR	19	26
☐	CNMT Relief Valves (Sump level rising)	20	27

13. **PERFORM** the following, as directed by the Unit SCO:

☐ • Steps 14 through 20

☐ • Steps 21 and 22

015 AK3.02
R043

INSTRUCTIONS	RESPONSE NOT OBTAINED
3.2 Leakage From CCW System	
17. PERFORM the following for Fuel Pool increased leakage (level RISING): (Refer to OP-145, Component Cooling Water, Section 8.8)	
☐ **a. ALIGN** the out of service FP heat exchanger for service.	
☐ **b. ISOLATE** the in-service FP heat exchanger.	
☐ **c. CHECK** CCW Surge Tank level STABLE OR RISING. **GO TO** Step 24.	☐ **c. RETURN TO** Step 13.
18. PERFORM the following for RCP oil reservoir increased leakage (levels RISING):	
☐ **a. VERIFY** proper seal injection.	

CAUTION

Operation of RCPs for greater than 10 minutes without CCW cooling to the motor oil coolers may result in RCP bearing damage.

☐ **b. SHUT** 1CC-207, CCW to RCP Seals & Motor Coolers Outer Isol Vlv.

☐ **c. SHUT** 1CC-299, RCP Bearing Oil Coolers Return.

(Continued on Next Page)

015 AK3.02
R043

INSTRUCTIONS	RESPONSE NOT OBTAINED
3.2 Leakage From CCW System	
18. (continued)	
☐ **d. CHECK** CCW Surge Tank level STABLE.	**d. PERFORM** the following: ☐ **(1) OPEN** 1CC-299, RCP Bearing Oil Coolers Return. ☐ **(2) OPEN** 1CC-207, CCW to RCP Seals & Motor Coolers Outer Isol Vlv. ☐ **(3) RETURN TO** Step 13.
☐ **e. CHECK** the Reactor is TRIPPED.	☐ **e. TRIP** the Reactor **AND GO TO** EOP PATH-1. (Continue with this procedure, as time permits.)
☐ **f. STOP** ALL RCP(s).	
☐ **g. SHUT** 1RC-107, PRZ Spray Loop A.	
☐ **h. SHUT** 1RC-103, PRZ Spray Loop B.	
☐ **i. GO TO** Step 23.	
19. PERFORM the following for RHR increased leakage:	
☐ **a. CHECK** RHR operating.	☐ **a. PERFORM** Attachment 3, Leakage From CCW System - RHR Not Operating.
☐ **b. PERFORM** Attachment 4, Leakage From CCW System - RHR Operating.	

Distractors

015AK3.02
R043

INSTRUCTIONS	RESPONSE NOT OBTAINED
3.4 Reactor Coolant Pump Motor Trouble	
16. CHECK ALL RCP Oil Reservoir level LOW alarms CLEAR.	**16. GO TO** Step 18.
☐ **17. GO TO** Step 19.	
18. CHECK BOTH of the following conditions exist:	**18. PERFORM** the following: **[A.1]**
☐ • The affected RCP Oil Reservoir local indication is ABOVE -1.25 inches	☐ **a. INITIATE** a plant shutdown using ONE of the following: • GP-006, Normal Plant Shutdown from Power Operation to Hot Standby • AOP-038, Rapid Downpower
☐ • Motor bearing temperatures are STABLE	☐ **b. WHEN** Reactor power is less than P-8 (49%), **THEN STOP** the affected RCP.
	☐ **c. REFER TO** Attachment 7, Operation With Two RCPs.
	☐ **d. WHEN** plant conditions permit, **THEN INITIATE** action to fill the affected RCP Oil Reservoir.
	☐ **e. WHEN** the RCP Oil Reservoir has been REFILLED, **THEN CONTACT** Responsible Engineer for monitoring requirements.

INSTRUCTIONS	RESPONSE NOT OBTAINED

3.4 Reactor Coolant Pump Motor Trouble

☐19. **CHECK** ALL RCP Oil Reservoir level HIGH alarms CLEAR.

19. **PERFORM** the following:

☐ a. **VERIFY** CCW flow is established to the motor bearing oil coolers per Attachment 3 (**Page** 30).

☐ b. **MONITOR** CCW Surge Tank level.

☐ c. **IF** CCW Surge Tank level is LOWERING,
THEN REFER TO AOP-014, Loss of Component Cooling Water.

NOTE

Running the Bearing Lift Oil Pump will aid in cooling rising oil temperatures.

✱☐20. **CHECK** RCP pump bearing temperatures STABLE OR LOWERING.

☐20. **START** the associated Bearing Lift Oil Pump.

✱☐21. **CHECK** RCP Motor bearing temperatures STABLE OR LOWERING.

☐21. **VERIFY** CCW flow is established to the motor bearing oil coolers per Attachment 3 (Page 30).

☐22. **CHECK** RCP Motor winding temperatures STABLE OR LOWERING.

22. **PERFORM** the following:

☐ a. **VERIFY** normal CNMT cooling per OP-169, Containment Cooling and Ventilation.

☐ b. **VERIFY** FI-9276, CONTAINMENT COIL UNIT, is maintained between 1,700 and 2,400 gpm.

☐ c. **DISPATCH** an operator to check RCP for debris blocking cooling air to the motor.

☐23. **CONSULT** with the Responsible Engineer for recommended follow-up actions.

015AK302
RO 43

1. INTRODUCTION

Lesson Objectives TP

A. Lesson objectives

Upon completion of this lesson, the student should be able to

1. IDENTIFY Entry Conditions required for entry into AOP-014, Loss of Component Cooling Water
2. IDENTIFY locations which by virtue of normal operation ΔP are a potential source of CCW in/out leakage per AOP-014, Loss of Component Cooling Water
3. Concerning the CCW pumps, DESCRIBE briefly why AOP-014 has steps requiring the operator to
   - Hold the control switch to stop until discharge pressure is below a certain value, and
   - Cycle control power for the breaker
4. DESCRIBE the expected response of CCW Surge Tank level indication to a leak in the CCW system
5. SUMMARIZE lessons learned from the related industry events below
   - SHNPP LER 90-018, Loss of CCW Inventory Due to Lifted RCDT HX Valve Caused by Incorrect Relief Valve Setpoint
   - SHNPP LER 90-019, Potential Loss of RHR System due to Loss of CCW Caused by System Design
6. Given a set of Entry Conditions, and a copy of AOP-014, DETERMINE the appropriate response

B. Reason for study

In order for the operator to safely operate the plant, a good working knowledge of the Abnormal Operating Procedures is required. The operator must know what to do in abnormal conditions to be able to return the plant to a normal operating configuration

24. 015 G2.4.31 001/NEW//HIGHER//SRO/HARRIS/7/2007/N0

Given the following:

- The unit was at 70% power when a secondary load rejection occurred.
- During the transient, the following alarms were received:
  - ALB-013-4-5, POWER RANGE CHANNEL DEVIATION
  - ALB-013-5-3, POWER RANGE UPPER DETECTOR HIGH FLUX DEV OR AUTO DEFEAT
  - ALB-013-5-4, POWER RANGE LOWER DETECTOR HIGH FLUX DEV OR AUTO DEFEAT
- Indicated power is currently 55%.
- On the Detector Current Comparator drawer, the UPPER SECTION DEVIATION and LOWER SECTION DEVIATION lights are illuminated.
- All other indications appear normal.

Which ONE (1) of the following describes the action required?

A. Recalibrate the NI channels in accordance with OP-105, Nuclear Instrumentation.

B. Enter T.S. 3.2.4 action statement for QPTR out of limits and reduce power to <50%.

C. Declare the QPTR alarm inoperable and perform OST-1039, Quadrant Power Tilt Ratio.

D. Implement AOP-001, Malfunction of the Rod Control and Indication System, to determine if a control rod is misaligned.

C is correct.
A would be performed if a calibration was in progress.
B is not currently required but may eventually be required based upon the results of C.
D is not required unless there is indication of a rod control failure. Since DRPI is normal, the only potential indication is the NI problem.

All of the options are plausible because they may be performed in the procedure based upon different conditions that may exist when these alarms are received

Question Number: 91

Tier 2 Group 2

Importance Rating: SRO 3.4
Technical Reference: ALB-013
Proposed references to be provided to applicants during examination: None
Learning Objective: NIS Text Obj 10-12
10 CFR Part 55 Content: 43.5/43.2

Comments:

10CFR55.43(b).5 because the SRO must assess plant conditions and determine a cource of action. 10CFR55.43(b).2 because knowledge of technical specifications and their bases are being applied

015G 2.4.31
SRO 91

DEVICES: NC-50A UPPER **SETPOINT**: 2% (time delay 1 min)

POWER RANGE UPPER DETECTOR HIGH FLUX DEV OR AUTO DEFEAT

REFLASH: NO

OPERATOR ACTIONS:

1. **CONFIRM** alarm using:
   a. Power Range meters NI-41B, NI-42B, NI-43B, NI-44B (MCB-1C)
   b. Power level recorder NR-45 channels by selector switch
   c. Power Range Channel Deviation alarm
   d. The following indications on the Detector Current Comparator drawer:
      (1) Upper Section Deviation alarm light illuminated
      (2) UPPER SECTION ALL CHANNELS BELOW 50% F.P. light illuminated
   e. Digital Rod Position Indication (DRPI)

2. **VERIFY** Automatic Functions: None

DISTRACTOR

3. **PERFORM** Corrective Actions:
   a. **IF** recalibration of Power Range NI channels is in progress,
      THEN REFER TO OP-105, Excore Nuclear Instrumentation.

> **NOTE**
> The presence of this alarm is expected if BOTH of the following conditions exist:
> - UPPER SECTION ALL CHANNELS BELOW 50% F.P. light illuminated on Detector Comparator drawer (all Power Range upper detectors are below 50% of normalized full power currents)
> - Indicated power less than 50% of rated thermal power

CORRECT

   b. **IF** indicated thermal power is above 50%,
      THEN:
      (1) **DECLARE** the QPTR Alarm inoperable.
      (2) **PERFORM** OST-1039, Quadrant Power Tilt Ratio.
      (3) **CONTACT** Reactor Engineering.

> **NOTE**
> The alarm may clear in the next step due to being below the alarm point and above the reset point.

   c. **IF** the QPTR is less than 1.02 **AND** the alarm has NOT cleared,
      THEN:
      (1) **POSITION** the comparator channel UPPER SECTION switch to each position (41, 42, 43, 44) **AND NOTE** switch position at the moment the alarm clears, to identify the alarming channel.
      (2) **POSITION** the UPPER SECTION switch to NORMAL.
      (3) **IF** the alarm remains clear for more than two minutes,
      THEN EXIT this procedure.
      (4) **IF** the alarming channel at the NI panels exhibits behavior indicative of detector failure,
      THEN REFER TO OWP-RP, Reactor Protection, **AND DECLARE** the detector and the alarm inoperable.

DISTRACTOR

   d. **REFER TO** Technical Specification 3.2.4 and surveillance requirements 4.2.4.1 and 4.2.4.2 **AND INITIATE** actions where appropriate.
   e. **IF** a malfunction of the Reactor Control System is experienced,
      THEN GO TO AOP-001, Malfunction of Rod Control and Indication System.
   f. **IF** maintenance is to be performed,
      THEN REFER TO OWP-RP, Reactor Protection.

(Continued on Next Page)

015 G 2.4.3)
SR091

DEVICES: NC-50C LOWER

SETPOINT: 2% (time delay 1 min)

POWER RANGE LOWER DETECTOR HIGH FLUX DEV OR AUTO DEFEAT

REFLASH: NO

OPERATOR ACTIONS:

1. **CONFIRM** alarm using:
   a. Power Range meters NI-41B, NI-42B, NI-43B, NI-44B (MCB-1C)
   b. Power level recorder NR-45 channels by selector switch
   c. Power Range Channel Deviation alarm
   d. The following indications on the Detector Current Comparator drawer:
      (1) Lower Section Deviation alarm light illuminated
      (2) LOWER SECTION ALL CHANNELS BELOW 50% F.P. light illuminated
   e. Digital Rod Position Indication (DRPI)

2. **VERIFY** Automatic Functions: None

3. **PERFORM** Corrective Actions:
   a. **IF** recalibration of Power Range NI channels is in progress,
      THEN REFER TO OP-105, Excore Nuclear Instrumentation.

> **NOTE**
> The presence of this alarm is expected if BOTH of the following conditions exist:
> - LOWER SECTION ALL CHANNELS BELOW 50% F.P. light illuminated on Detector Comparator drawer (all Power Range lower detectors are below 50% of normalized full power currents)
> - Indicated power less than 50% of rated thermal power

   b. **IF** indicated thermal power is above 50%,
      THEN:
      (1) **DECLARE** the QPTR Alarm inoperable.
      (2) **PERFORM** OST-1039, Quadrant Power Tilt Ratio.
      (3) **CONTACT** Reactor Engineering.

> **NOTE**
> The alarm may clear in the next step due to being below the alarm point and above the reset point.

   c. **IF** the QPTR is less than 1.02 **AND** the alarm has NOT cleared,
      THEN:
      (1) **POSITION** the comparator channel LOWER SECTION switch to each position (41, 42, 43, 44) **AND NOTE** switch position at the moment the alarm clears, to identify the alarming channel.
      (2) **POSITION** the LOWER SECTION switch to NORMAL.
      (3) **IF** the alarm remains clear for more than two minutes,
      THEN EXIT this procedure.
      (4) **IF** the alarming channel at the NI panels exhibits behavior indicative of detector failure,
      THEN REFER TO OWP-RP, Reactor Protection, **AND DECLARE** the detector and the alarm inoperable.
   d. **REFER TO** Technical Specification 3.2.4 and surveillance requirements 4.2.4.1 and 4.2.4.2 **AND INITIATE** actions where appropriate.
   e. **IF** a malfunction of the Reactor Control System is experienced,
      THEN GO TO AOP-001, Malfunction of Rod Control and Indication System.
   f. **IF** maintenance is to be performed,
      THEN REFER TO OWP-RP, Reactor Protection.

(Continued on Next Page)

DEVICES: NS-01RE-0046BW **SETPOINT:** 5.0% deviation

POWER RANGE CHANNEL DEVIATION

REFLASH: NO

OPERATOR ACTIONS:

1. **CONFIRM** alarm using:
   a. Power Range instrumentation (MCB-1C):
      (1) NI-41B, PR N41 Percent Full Power
      (2) NI-42B, PR N42 Percent Full Power
      (3) NI-43B, PR N43 Percent Full Power
      (4) NI-44B, PR N44 Percent Full Power
   b. NI-45, Power Level Recorder channels by selector switch

2. **VERIFY** Automatic Functions: None

3. **PERFORM** Corrective Actions:
   a. **REFER TO** Technical Specifications 3.2.1, 3.2.4, and 3.3.1, **AND INITIATE** actions where appropriate.
   b. **IF** there is indication of a control rod malfunction (MCB or AEP-1), **THEN GO TO** AOP-001, Malfunction of Rod Control and Indication System.
   c. **IF** maintenance is to be performed, **THEN REFER TO** OWP-RP, Reactor Protection.

CAUSES:

1. Radial flux distribution
2. Control rod malfunction
3. Alarm circuit or instrumentation malfunction

REFERENCES:

1. Technical Specifications 3.2.1, 3.2.4, and 3.3.1
2. AOP-001, Malfunction of Rod Control and Indication System
3. OWP-RP, Reactor Protection
4. 6-B-401 Sheet 0046K, 0080-0084
5. EC 51431

015 G2.4.31
SRO 91

e. NIS power-range tilts

f. Using MCB and NI drawer indications to determine if reactor trip will occur at a certain power level

7. STATE the reactor trips, interlocks, and permissives associated with NIS, including setpoints and coincidence, if applicable.

8. Given a set of plant conditions, PREDICT the response of the NIS and the effect on overall plant conditions with regard to any of the following automatic control functions, interlocks, or conditions:
   a. SR and IR trip bypasses
   b. SR, IR, and PR (low) trip blocks
   c. Undercompensated IR channel
   d. Overcompensated IR channel
   e. Power Transient

9. Given a set of plant conditions, PREDICT the response of the NIS and the effects on overall plant operations for major component failures/ malfunctions:
   a. IR channel's response to overcompensated and undercompensated conditions

10. STATE the Limiting Condition of Operation (not including the Actions) for the following Technical Specifications as they relate the NIS and WRFM System.
    a. 2.2.1 Reactor Trip System Instrumentation Setpoints
    b. 3.2.1 AFD
    c. 3.2.4 QPTR
    d. 3.3.1 Reactor Trip System Instrumentation
    e. 3.3.3.5.a—Remote Shutdown System monitoring instrumentation

11. IDENTIFY the entry conditions and the required actions for the preceding Technical Specifications which require actions to be taken in one hour or less.

12. Given a copy of the appropriate section of the Technical Specifications, properly APPLY the preceding Technical Specifications and their bases (SRO only) to a given plant condition

25. 017 A3.02 001/NEW//LOWER//RO/HARRIS/7/2007/NO

Which ONE (1) of the following describes the readings that may be obtained from the Inadequate Core Cooling Monitor local microprocessor panel, and the method used to obtain them?

A. PIC Room C-17 RAB 286' using CRT monitor and keyboard.

B. PIC Room C-17 RAB 286' using thumbwheels set to specific points identified by a legend.

C. PIC Room RAB 305' using CRT monitor and keyboard.

D. PIC Room RAB 305' using thumbwheels set to specific points identified by a legend.

A is incorrect, although location is correct. CRT is at the remote ICCM panel, not local
B is correct.
C is incorrect. Location is incorrect and display is incorrect
D is incorrect. Location is incorrect but display is correct.

Lower cognitive level item requires applicant to know location and equipment available at the location
Ability to monitor automatic operation of the ITM system including: Measurement of in-core thermocouple temperatures at panel outside control room

Question Number: 30

Tier 2 Group 2

Importance Rating: RO 3.4

Technical Reference: AOP-004
Proposed references to be provided to applicants during examination: None
Learning Objective: ICCM Text Obj 5
10 CFR Part 55 Content: 41.10

Comments:

017 A302 RO Q 30

Student Objectives

1. STATE the purpose and design function of the Inadequate Core Cooling Monitor (ICCM), including the following subsystems:
   a. Reactor Vessel Level Indicating System (RVLIS)
   b. Incore Thermocouple System (ITS)

2. STATE the function of the following ICCM major components:
   a. Microprocessor Cabinets, including power supply and their location
   b. Plasma Display Units
   c. Instrument Racks
   d. Maintenance Terminal

3. DESCRIBE the ICCM normal operation, including:
   a. Reference Junction Box operation and location
   b. How the plant's subcooling monitor information is processed using Figure 4: Subcooling Monitor, excluding the ERFIS ID numbers.

4. STATE the major precautions, limitations, and safety considerations associated with the ICCM, including the following:
   a. The required maximum temperature measurement and indication per Reg. Guide 1.97

5. IDENTIFY associated remote and local instrumentation, indications, alarms, and controls for the ICCM, including:
   a. RVLIS ranges
      1. Number of ranges
      2. Units of measurement
      3. Span of indication
   b. Expected indications for a liquid filled vessel during all RCP combinations
   c. Available ICCM plasma unit display pages and how an operator accesses the individual pages.
   d. Accessing ICCM data at each microprocessor cabinet

Microprocessor Cabinet

MICROPROCESSOR CABINET INDICATIONS AND CONTROLS

Incoming AC power comes in through CB1 on the right-hand side of the cabinet. The four DC circuits are fed from rectified AC input. One DC power supply breaker and fuse are located on the DC power rack.

LOCAL DISPLAY

A 40-character local display can be used to access information at the microprocessor. A 2-digit code may be entered via thumb wheels to access one point at a time. A legend relating the points to their 2-digit code is on the inside of the cabinet's door. See Table 3: Train "A" Thumbwheel Assignments.

Figure 8: Local Display Panel

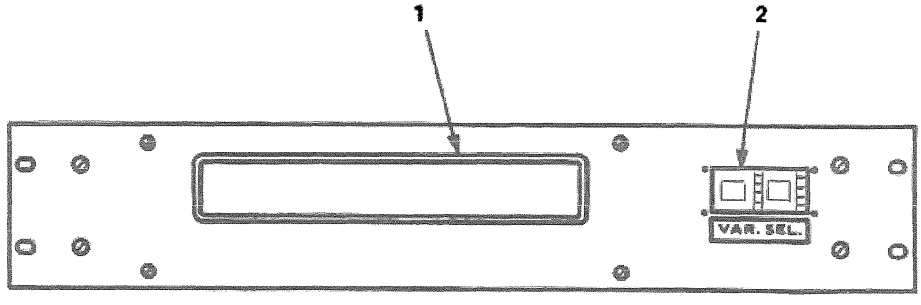

1 40-Character Display
2 VAR. SEL. Thumbwheel Switch

LOCAL DISPLAY PANEL

BEWARE! All readings are given in the following notation (i.e., first digit is zero):

- T_{HOT} of 621°F is displayed as **+0.621565E+03°F**

The 40-character display is a blue-on-black color scheme and is updated every 2 seconds.

CARD CAGE SECTION STATUS PANEL

This card cage contains:

Status Lamps A1, A2, A3, B1, B2, and B3 - These are the Microprocessor associated status lights. A1 and A2 are supposed to blink.

INSTRUCTIONS	RESPONSE NOT OBTAINED
3.1 Remote Shutdown Due To Fire	
44. CONTINUE RCS cooldown to cold shutdown:	
ACP / Unit SCO	*ACP / Unit SCO*
☐ **a. CHECK** instrument air AVAILABLE.	✱☐ **a. CONTROL** cooldown rate WITHOUT instrument air available as follows: **(1) CYCLE** 1SI-341, Low Head SI Train B To Cold Leg, as necessary. **(2) WHEN** 1SI-341 is shut, **VERIFY OPEN** 1RH-69, RHR Pump B-SB Miniflow. **(3) GO TO** Step 44.c.
ACP / Unit SCO	
✱☐ **b. CONTROL** the following to maintain RHR flow rate 2000 to 3750 GPM: • FK-605B2 RHR Heat Xchg B Byp Flow Cont-1RH-58 • HC-603B2 RHR Heat Xchg B Out Flow Cont-1RH-66	
286' RAB / EXTRA	
✱☐ **c. MONITOR** RCS cooldown rate using the following: • "A" Train Core Exit Thermocouples read on RVLIS cabinet in PIC C17 Room (if available) **OR** • Local temperature indicator TI-5551B on the outlet of RHR Heat Exchanger B	

(Continued on Next Page)

Given the following:

- A power reduction to 50% is scheduled for this shift for planned maintenance.
- A loss of power has just rendered the boric acid blender control inoperable.
- Emergency boration is not available.

Which ONE (1) of the following is correct concerning the planned power reduction?

A. The downpower should continue as planned using the RWST as a source of borated makeup.

B. The downpower should continue as planned using control rods to maintain RCS temperature.

C. The downpower should be postponed because the crew will be unable to borate to compensate for Xenon effects during the downpower.

D✓ The downpower should be postponed because the crew will be unable to maintain control rods above the insertion limit.

D. Correct. Downpower to 50% without boration capability would result in control rods well below the insertion limits. Loss of boric acid blender requires unit to be maintained stable.
A. Incorrect. Use of RWST would result in rapid insertion of negative reactivity and the crew would have extreme difficulty controlling RCS temperature and reactor power.
B. Incorrect. If rods were used, insertion limits would be exceeded
C. Incorrect. Xenon will be adding negative reactivity during downpower, requiring dilution rather than boration.
Knowledge of the reasons for the following responses as they apply to the Loss of Reactor Coolant Pump Makeup: Need to avoid plant transients

Question Number: 44

Tier 1 Group 1

Importance Rating: RO 3.2

Technical Reference: Reactivity mgmt section of OMM-1, pg 67
Proposed references to be provided to applicants during examination: None
Learning Objective: LP PP 2.0 Obj 2
10 CFR Part 55 Content: 41.10

Comments:

022 AIC305
120 44

f. Maintaining a cautious approach to the adjustment or interpretation of power indication by questioning the reasons behind discrepancies that may exist between power measurements.

g. Evaluating the recommendations provided by the Reactor Engineer. However, electing to take actions more conservative than the recommendations is within the Reactivity Management Philosophy.

R h. Ensuring that the normal operating practice for control rods is that they are only manipulated in a deliberate, carefully controlled manner while constantly monitoring nuclear instrumentation and redundant indications of reactor power and neutron flux. (Reference INPO SOER 96-01)

R i. During reactivity manipulations in Modes 1 and 2 involving the RCS Makeup System (boration, dilution, blended flow), BTRS, or movement of control rods, the Senior Reactor Operator shall not be involved in any potentially distracting activities. Complete attention shall be given to proper setup and operation of the reactivity control system and monitoring reactor response. For longer dilutions or BTRS operations occurring near the end of cycle (that is, RCS boron 25 ppm or less) periodic oversight by the USCO during extended operation of the reactivity control system is acceptable. (Reference INPO SOER 94-02 and CRs 97-01348 and 97-01582)

13. Reactor Operators specific responsibilities include:

a. Placing emphasis during turnover and control board surveillance on items important to reactivity management.

b. Being cognizant of plant conditions requiring emergency boration.

c. Having the authority to terminate any activity in which the effects on reactivity control are unknown or non-conservative. In particular, he has the responsibility and authority to trip the unit if there is uncertainty as to the unit's status with respect to the control of reactivity and control of the plant.

d. Logging the details of events or equipment problems related to the control of reactivity and initiating corrective actions.

R e. The RO shall not rely on reactor trip interlocks to trip the reactor but rather when reactor trip is warranted, manually trip the reactor to avoid challenging the Reactor Protection System. (Reference 2.5.6)

G22AK3.05
R044

f. Having the authority to bypass automatic control systems by placing in the manual mode, maintaining necessary surveillance while in manual, and returning the system to automatic in a controlled manner.

g. Assuming no other duties while supervising trainees in the operation of controls that affect reactivity.

h. Maintaining a cautious approach to the adjustment or interpretation of power indication by questioning the reasons behind discrepancies that may exist between power measurements.

i. Taking a conservative approach in the performance of tests or checks by questioning personnel concerning their requests to perform evolutions until satisfied that reactivity control is not compromised.

j. The RO shall not rely solely on one indication when making operating decisions related to reactivity management, but shall seek alternate verification when available.

k. Ensuring that ECC is approached cautiously. The policy shall be that criticality could be achieved at any time rather than an attitude of over reliance in an ECC.

R l. Exercising the expectation that control rods are only manipulated in a deliberate, carefully controlled manner while constantly monitoring nuclear instrumentation and redundant indications of reactor power and neutron flux. (Reference SOER 96-01)

R m. During reactivity manipulations involving the RCS Makeup System(boration, dilution, blended flow), BTRS, or movement of control rods, the Reactor Operator shall not be involved in any potentially distracting activities. Complete attention shall be given to proper setup and operation of the reactivity control system and monitoring reactor response. For longer borations following reactor shutdown or trip, periodic oversight is acceptable. (Reference INPO SOER 94-02 and CRs 97-01348 and 97-01582)

14. If the Reactor is made subcritical below the power range due to over-boration or rod insertion, the reactor should be tripped. Any attempt to restore the reactor to a critical status could result in multiple reactivity additions and a rapid return to power.

15. If a plant shutdown in excess of 45 MW/Min is required, the plant should be tripped. Load reductions at a rate greater than 45 MW/Min could lead to a loss of plant control and an ESF actuation.

3. DEFINE the terms: May, Must, Shall, and Should as they pertain to procedure usage as described in PRO-NGGC-0201.

4. RECOGNIZE the lessons learned from industry events as related to AOs

   a. SOER 85-2

   b. NRC IN 92-30

B. RO Lesson Objectives

1. LIST the on-shift operations staffing requirements as outlined in OMM-001 during any given mode of plant operation

2. IDENTIFY the responsibilities of the Reactor Operator as listed in OMM-001.

3. DISCUSS the procedural requirements concerning the following:

   a. Who can perform manipulations of reactor plant controls

   b. Control room "at the controls area"

   c. Control room indications

   d. Control room references

   e. Maintenance during peak load periods

   f. Changes to control setpoints

   g. Control room conduct

   h. Shift evolutions/briefings

   i. Operation of site alarms from the MCB

   j. Control room status board

   k. MCB annunciators

   l. Administrative control of shutdown banks

   m. Refilling systems

   n. Administrative hold of a procedure

   o. Procedure checklists

   p. Procedure review

4. DESCRIBE the RO responsibilities in OPS-NGGC-1306 concerning Reactivity Management

27. 022 K2.01 001/NEW//LOWER//RO/HARRIS/7/2007/NO

Which ONE (1) of the following describes the power supply to the fan motor for Containment Fan Cooler AH-1?

A. Aux Bus 1D1

B. Aux Bus 1E1

C. MCC 1A34

D✓ MCC 1B22

A and B are incorrect but plausible because Aux Busses supply non-safety class CFCUs.
C is incorrect; wrong train. AH-2 and AH-3 are from "A" Train
D is correct. AH-1 is actually Train B, as well as AH-4
Knowledge of power supplies to the following: Containment cooling fans

Question Number: 14

Tier 2 Group 1

Importance Rating: RO 3.0

Technical Reference: CCS Text
Proposed references to be provided to applicants during examination: None
Learning Objective: CCS Text Obj 1
10 CFR Part 55 Content: 41.5

Comments:

drainage of large quantities of condensed steam (as would occur during a LOCA), preventing a loss of cooling capacity.

Each of the containment fan coolers contains two 50 percent capacity, two-speed, fans that serve to move air through the system. At full speed each fan exhausts 62,500 acfm; at half speed each exhausts 31,250 acfm. A gravity operated damper on the discharge of each fan prevents reverse flow through an idle fan. Each of the fans is driven by a safety-related, two-speed, 480 VAC motor. The motors are totally enclosed and air-cooled. The A train fans receive power from bus 1A3-SA and the B train fans receive power from bus 1B3-SA. The fan numbers, locations and specifics on the motor power supplies are shown below:

Table 1: Containment Fan Cooler Power Supplies

Unit	Location	Fan	Power Supply
AH-1 (train SB)	CNMT 236' azimuth 60°	AH-1 A-SB	480V MCC 1B22-SB ckt 2A
		AH-1 B-SB	480V MCC 1B22-SB ckt 3A
AH-2 (train SA)	CNMT 236' azimuth 120°	AH-2 A-SA	480V MCC 1A22-SA ckt 2A
		AH-2 B-SA	480V MCC 1A22-SA ckt 1A
AH-3 (train SA)	CNMT 286' azimuth 60°	AH-3 A-SA	480V MCC 1A34-SA ckt 1A
		AH-3 B-SA	480V MCC 1A34-SA ckt 2A
AH-4 (train SB)	CNMT 286' azimuth 120°	AH-4 A-SB	480V MCC 1B34-SB ckt 2A
		AH-4 B-SB	480V MCC 1B34-SB ckt 3A

Air flow is directed to the concrete air shaft from the common discharge of each air handler by a locked open, parallel-blade damper. These dampers provide a flow path during normal and post-accident conditions. A post-accident discharge damper connects to the common discharge of each air handler upstream of the locked open normal discharge damper. The post-accident dampers are normally shut, and open on an SI to provide an additional flow path for Containment cooling during accidents (AH-3 and AH-4 post-accident dampers may also be opened during maximum cooling mode as discussed in chapter 3). The post-accident discharge duct is provided with high velocity nozzles to diffuse air to a minimum distance of 40 feet. These nozzles are directed to selected areas of heat release, to achieve thorough mixing of the containment atmosphere. The post-accident dampers are pneumatically-operated and fail to the open position. Position indication for both discharge dampers is provided on SLB-5 for the train A dampers and SLB-6 for the train B dampers. The dampers associated with each air handler are shown below.

022K2.01
R014

Table 3: Coil Unit Power Supplies

Unit	Location	Fan	Bus Power Supply
AH-37	CNMT 221' azimuth 330°	AH-37 1A	480V Aux Bus 1D1
		AH-37 1B	480V Aux Bus 1E1
AH-38	CNMT 221' azimuth 290°	AH-38 1A	480V Aux Bus 1D1
		AH-38 1B	480V Aux Bus 1E1
AH-39	CNMT 221' azimuth 215°	AH-39 1A	480V Aux Bus 1D1
		AH-39 1B	480V Aux Bus 1E1

DISTRACTORS

Each Containment Fan Coil Unit fan has its own pneumatically operated discharge damper. The parallel-blade dampers open to provide a flowpath when its associated fan is running and shut when its fan is off to prevent backflow through an idle fan. The dampers will fail shut on a loss of power or air. Open-shut position indication for each damper is provided on SLB-7. The discharge damper associated with each fan is listed below

- AH-37A and 37B discharge through CV-D9 and D10 respectively
- AH-38A and 38B discharge through CV-D11 and D12 respectively
- AH-39A and 39B discharge through CV-D13 and D14 respectively

PRIMARY SHIELD COOLING COMPONENTS

The Primary Shield Cooling sub-system consists of two safety related fans (S-2 A-SA and S-2 B-SB). The fans serve to move air through the system. The fans are 100 percent capacity fans. Each fan exhausts 18,000 acfm. The fans are located in the Containment Building at elevation 221' azimuth 175°. Each fan is driven by a 40 HP induction motor. Fan S-2 A-SA is powered from 480V MCC 1A21-SA compartment 4C and fan S-2 B-SB is powered from 480V MCC 1B21-SB compartment 4B. Bus power supplies are from 1A3-SA and 1B3-SB respectively.

Each fan has a manually operated, parallel-blade, locked-open inlet damper with a limitorque operator. Each fan also has a gravity operated discharge damper that opens when its respective fan is running, and shuts when its fan is off to prevent backflow through an idle fan.

REACTOR SUPPORT COOLING COMPONENTS

The Reactor Support Cooling sub-system consists of two safety related fans (S-4 A-SA and S-4 B-SB). The fans serve to move air through the system. The fans are 100 percent capacity and each fan exhausts 27,600 acfm. The fans are located in the Containment Building at elevation 236' azimuth 80°. Fan S-4 A-SA is powered

022K201
RO 14

Student Objectives

1. STATE the purpose and design function of the Containment Cooling System (CCS) and its subsystems: **AO**
   a. Containment Fan Cooler Units
   b. Containment Fan Coil Units
   c. Primary Shield Cooling
   d. Reactor Support Cooling
   e. CRDM Ventilation **(RO Only)**
   f. Elevator Machine Room Cooling

2. STATE the function of the following CCS major components: **AO**
   a. Containment Fan Cooler sub-system including cooling coils, fans, dampers and associated airshafts and ducts
   b. Containment Fan Coil sub-system including cooling coils, fans and dampers
   c. Primary Shield Cooling sub-system including fans and dampers
   d. Reactor Support Cooling sub-system including fans and dampers
   e. CRDM Ventilation sub-system including the cooling shroud assembly, internal baffles, fans and dampers **(RO Only)**
   f. Elevator Machine Room Cooling fan

3. DESCRIBE the CCS normal operation, including operation sequence and normal parameters, and expected system response. **AO**

4. DESCRIBE the modes of operations and major flowpaths of the CCS in accordance with plant operating procedures. **AO**
   a. Containment Fan Cooler normal mode (temperature <118F)
   b. Containment Fan Cooler maximum cooling mode
   c. Containment Fan Coil Units normal operation
   d. Primary Shield Cooling normal operation
   e. Reactor Support Cooling normal operation
   f. CRDM Ventilation normal operation **(RO Only)**
   g. Elevator Machine Room Cooling normal operation

Given the following:

- An Emergency Boration is being performed in accordance with AOP-002, Emergency Boration.
- The preferred boration flow path is being used.

Which ONE (1) of the following describes the boron concentration and minimum temperature for solubility of the borated water being delivered to the RCS?

A. 2400 ppm; 40 degrees F

B. 2400 ppm; 65 degrees F

C. 7000 ppm; 40 degrees F

D. 7000 ppm; 65 degrees F

A is incorrect because it represents parameters for RWST.
B is incorrect because it represents boron concentration for RWST and temperature for Boric Acid tanks
C is incorrect because it represents Boric Acid Tank concentration and RWST temperature

Boric Acid Tank is 7000 ppm; 65 degrees from room heating. 2400 ppm amd 40 degrees is RWST. Preferred path is boric acid
Knowledge of the operational implications of the following concepts as they apply to Emergency Boration: Low temperature limits for boron concentration

Question Number: 57

Tier 1 Group 2

Importance Rating: RO 2.8

Technical Reference: AOP-002, PMS Student Text
Proposed references to be provided to applicants during examination: None
Learning Objective: PMS Text Obj 13
10 CFR Part 55 Content: 41.5, 41.10

Comments:

Boric Acid Tank

IMPORTANT

The Boric Acid Batching Tank boron concentration must be verified by sample analysis before transfer to the Boric Acid Tank.

The Boric acid tank is located on the 261' elevation of the RAB. The tank capacity is 36,000 gallons. The tank is fabricated out of stainless steel. The oxygen exclusion measures the diaphragm. The Pressure relief vent lines are provided above and below the diaphragm to relieve pressure. The makeup is from the BA batch tank. The Batch tank contents are transferred with the BA transfer pumps. The tank recirculation 1CS-552 is opened and tank is recirculated by the BA transfer pumps. The Boric Acid Tank room is heated to maintain a tank temperature greater than 65°F to ensure the boron remains in the solution.

BA Batching Tank

The BA batching tank is located on the 261' elevation of the RAB. The capacity of the batching tank is 400 gallons. The tank is fabricated out of austenitic stainless steel. This provides mixing capability to produce a 4 wt. percent boric acid for use in the BAT. The Design temperature is 300°F and the design pressure is atmospheric. The locally controlled stainless steel auger transfers boric acid crystals poured into the auger from floor level to the tank. The locally controlled agitator stirs the tank contents to dissolve boric acid crystals.

Steam-heated jacket heats the tank contents to approximately 80°F to dissolve boric acid crystals. Steam is supplied from auxiliary steam: TCV-0100 (1CS-505) and shuts on the high temperature signal of 105°F. The temperature alarms and high temperature shut off of TCV-0100 (1CS-505) are controlled by the adjustable pointer on the local temperature controller.

BA Transfer Pumps

The two BA transfer pumps are located on the 236' elevation of the RAB in the common pump room. The pumps deliver 75 gpm at 235 ft. The 480-V AC Power supplies: 1A-SA MCC 1A35-SA and 1B-SB MCC 1B35-SB. The suction is from the BAT and the BA batch tank.

With the minimum flow protection each pump has a recirculation line with a common flow-restricting orifice. The Recirculation flow is directed to the BAT. The 1CS-552 (BA Recirculation Orifice Bypass Isolation Valve) bypasses the orifice to allow a higher recirculation flow rate, normally shut. If both BA transfer pumps must be run in parallel on the minimum flow line, verify 1CS-552 is open to prevent dead heading the weaker pump. The Normal lineup at power is one pump in AUTO and the second pump in OFF.

022AK1.04
R057

1. A minimum contained borated water volume of 7150 gallons which is ensured by maintaining indicated level greater than or equal to 23%.
2. A boron concentration of between 7000 and 7750 ppm, and
3. A minimum solution temperature of 65 degrees F.

b. The refueling water storage tank (RWST) with:

1. A minimum contained borated water volume of 106,000 gallons which is equivalent to 12% indicated level.
2. A boron concentration of between 2400 and 2600 ppm., and
3. A minimum solution temperature of 40 degrees F.

Action: With no borated water source OPERABLE, suspend all operations involving CORE ALTERATIONS or positive reactivity changes.

T.S. 3.1.2.6 APPLICABILITY MODES 1-4

As a minimum, the following borated water sources shall be OPERABLE as required by T.S> 3.1.2.2:

a. The boric acid tank with:

1. A minimum contained water volume of 24,150 gallons, which is ensured by maintaining indicated level greater than or equal to 74%., ← BAT
2. A boron concentration of between 7000 and 7750 ppm, and
3. A minimum solution temperature of 65 degrees F.

b. The Refueling Water Storage Tank (RWST) with:

1. A minimum contained borated water volume of 436,000 gallons, which is equivalent to 92% indicated level, ← RWST
2. A boron concentration of between 2400 and 2600 ppm,
3. A minimum solution temperature of 40 degrees F, and
4. A maximum solution temperature of 125 degrees F.

Actions:

1. With the boric acid tank inoperable and being used as one of the above required borated water sources, restore the boric acid tank to OPERABLE status within 72 hours, or be in at least HOT STANDBY within the next 6 hours and borated to a SHUTDOWN MARGIN specified in the CORE OPERATING LIMITS REPORT(COLR), plant procedure PLP-106 at 200 degrees F; restore the boric acid tank to OPERABLE status within the next 7 days or be in COLD SHUTDOWN within the next 30 hours.

2. With the RWST inoperable, restore the tank to OPERABLE status within 1 hour or be in at least HOT STANDBY within the next 6 hours and in COLD SHUTDOWN within the following 30 hours.

022 AK1.04
R057

~~3/4.5.4 REFUELING WATER STORAGE TANK~~

LIMITING CONDITION FOR OPERATION

DISTRACTOR

3.5.4 The refueling water storage tank (RWST) shall be OPERABLE with:

a. A minimum contained borated water volume of 436,000 gallons, which is equivalent to 92% indicated level.

b. A boron concentration of between 2400 and 2600 ppm of boron,

c. A minimum solution temperature of 40°F, and

d. A maximum solution temperature of 125°F.

APPLICABILITY: MODES 1, 2, 3, and 4.

ACTION:

With the RWST inoperable, restore the tank to OPERABLE status within 1 hour* or be in at least HOT STANDBY within 6 hours and in COLD SHUTDOWN within the following 30 hours.

SURVEILLANCE REQUIREMENTS

4.5.4 The RWST shall be demonstrated OPERABLE:

a. At least once per 7 days by:

1. Verifying the contained borated water volume in the tank, and

2. Verifying the boron concentration of the water.

b. At least once per 24 hours by verifying the RWST temperature when the outside air temperature is less than 40°F or greater than 125°F.

* Except that while performing surveillance 4.4.6.2.2, the tank must be returned to OPERABLE status within 12 hours.

022AK1.04
R057

f. Boric acid makeup to CSIP suction header valve, 1CS-156 (FCV-113B)

g. Emergency borate valve, 1CS-278

9. Given a set of plant conditions, PREDICT the response of the PMS and the effect on overall plant conditions with regard to automatic control functions, signals, and interlocks, including:
   a. Response of the PMS to a safeguards sequencer actuation

10. DESCRIBE the interrelationships (physical connections, design functions, flow paths) between the PMS and other plant systems. **AO**

11. DESCRIBE how the Primary Makeup System is used in the response to, and mitigation of, events as described in the applicable AOPs and EOPs, including: **AO**
    a. Local actions to borate or dilute the RCS (given AOP-003 and simplified drawings)

12. Given a set of plant conditions, PREDICT the response of the PMS and the effects on overall plant operations for major component failures/ malfunctions.

13. STATE the Limiting Condition of Operation (not including the Actions) for the following Technical Specifications as they relate to the PMS.
    a. 3.1.2.1 Boration Flow Path - Shutdown
    b. 3.1.2.2 Boration Flow Path - Operating
    c. 3.1.2.5 Borated Water Source - Shutdown
    d. 3.1.2.6 Borated Water Sources - Operating

14. IDENTIFY entry conditions and required actions for the PMS Technical Specifications that require actions to be taken in one hour or less.

15. Given a copy of the appropriate section of the Technical Specifications, properly APPLY the following Technical Specification and their bases (SRO only) to a given plant condition.
    a. 3.1.2.1 Boration Flow Path - Shutdown
    b. 3.1.2.2 Boration Flow Path - Operating
    c. 3.1.2.5 Borated Water Source – Shutdown
    d. 3.1.2.6 Borated Water Sources – Operating

Initial conditions:

- The plant is in Mode 5.
- RCS temperature is stable at 180 degrees F.
- "A" Train RHR is in service.
- The Containment Airlock is open.
- The Equipment Hatch is in place with all bolts removed.

Current conditions:

- "A" RHR Pump has tripped.
- RCS temperature is 190 degrees F and rising at 1 degree F per minute.
- RHR has NOT been restored.

Which ONE (1) of the following describes the action that MUST be performed in accordance with AOP-020, Loss of RCS Inventory or Heat Removal While Shutdown?

A. Actuate Phase A isolation **if** RCS temperature exceeds 200 degrees F and Containent Integrity has not been verified.

B. Start a CSIP to initiate RCS cooling **if** RCS temperature exceeds 200 degrees F.

C. Actuate Phase A isolation **before** RCS temperature exceeds 200 degrees F and Containent Integrity has not been verified.

D. Start a CSIP to initiate RCS cooling **before** RCS temperature exceeds 200 degrees F.

A is incorrect because the Phase A must be actuated prior to reaching 200 degrees F
B is incorrect because a CSIP may not be available and there are other alternate means of makeup to the RCS. Plausible because it is reasonable to assume that a Charging Pump will be started for this condition
C is correct
D is incorrect for same reason as B except that 'prior to 200 degrees' is correct.

Question Number: 45

Tier 1 Group 1

Importance Rating: RO 3.6

Technical Reference: AOP-020
Proposed references to be provided to applicants during examination: None
Learning Objective: LPAOP3-20 Obj 2
10 CFR Part 55 Content: 41.10

Comments:

025 AA1.01
R045

INSTRUCTIONS	RESPONSE NOT OBTAINED

3.1 Loss of RHR Flow or Temperature Control

NOTE

Loss of RHR or exceeding an RCS temperature of 200°F without CNMT integrity may require initiation of the HNP Emergency Plan. **[C.2]**

☐ **3.** **REFER TO** PEP-110, Emergency Classification and Protective Action Recommendations,
AND ENTER the EAL Network at entry point X.

✱☐ **4.** **CHECK** that RCS temperature can be maintained AT OR BELOW 200°F. ✱

4. **IF** CNMT integrity is NOT established, **THEN PERFORM** the following prior to RCS exceeding 200°F:

☐ **a.** **ACTUATE** Phase A Isolation.

☐ **b.** **REFER TO** Attachment 4 of OMM-004, Post Trip/Safeguards Review,
AND VERIFY Phase A Isolation.

☐ **c.** **REFER TO** Attachment 7 of OMM-004, Post Trip/Safeguards Review,
AND VERIFY CNMT Ventilation Isolation.

☐ **d.** **RESET** Phase A.

e. **OPEN** the following:

☐ • 1IA-819, Containment Instrument Air

☐ • 1SI-287, Accumulator & PRZ N2 Supply

☐ • 1CS-470, RCP Seal Water Return

☐ • 1CS-472, RCP Seal Water Return

(Continued on Next Page)

RO 45 025 AA101

INSTRUCTIONS	RESPONSE NOT OBTAINED

3.1 Loss of RHR Flow or Temperature Control

☐ **7. CHECK** that the RV head is OFF.

7. PERFORM the following:

☐ **a. MONITOR** core exit thermocouples to determine RCS heatup rate.

☐ **b. GO TO** Section 3.5, Core Heat Removal Recovery (Page 52).

8. REFER TO curves H-X-8 through H-X-11
AND DETERMINE the following: **[C.1]**

☐ • Time to reach core boiling

☐ • Core boil-off time

NOTE

GP-008 requires two methods for delivering borated water to the RCS. One is a "functional" CSIP. The second can be either the other "available" CSIP (breaker racked out) or a gravity feed path from the RWST.

☐ **9. VERIFY** one CSIP RUNNING.

9. PLACE an available standby CSIP in service as follows:

☐ **a. TRANSFER** administrative controls from the standby to the currently aligned CSIP.

☐ **b. START** the standby CSIP.

INSTRUCTIONS	RESPONSE NOT OBTAINED

3.1 Loss of RHR Flow or Temperature Control

✱☐ **10. REFER TO** Table 1 below **AND ADJUST** CSIP flow to maintain level in accordance with current plant conditions.

10. IF no CSIP is available, **THEN PERFORM** the following to gravity feed from the RWST:

☐ **a. SHUT** 1CS-28, RHR Letdown HC-142.1.

b. OPEN the following from the MCB:

☐ • 1SI-322, RWST to RHR Pump A

☐ • 1SI-323, RWST to RHR Pump B

✱☐ **c. Locally THROTTLE** 1SI-322 and 1SI-323 to maintain core exit thermocouples below 212°F.

Table 1

Plant Condition	RV Level to Maintain
Refueling Cavity flooded	Between 12 and 36 inches below RV flange
ALL SG primary manways **INSTALLED AND** ALL RCPs **COUPLED**	Between 12 and 36 inches below RV flange
ALL SG primary manways **INSTALLED AND** ANY RCP **UNCOUPLED**	No higher than 36 inches below RV flange
ANY SG primary manway **REMOVED AND** associated nozzle dam **NOT INSTALLED**	Between 67 and 75 inches below RV flange
Associated nozzle dams **INSTALLED** for ALL **REMOVED** SG primary manways	Between 12 and 36 inches below RV flange

025AA101

RO 45

I. INTRODUCTION

A. Lesson objectives

Lesson Objectives TP

Upon completion of this lesson, the student should be able to

1. IDENTIFY conditions that require entry into AOP-020, Loss of RCS Inventory or RHR While Shutdown
2. Given a set of entry conditions and a copy of AOP-020, DETERMINE the appropriate response.
3. STATE when Containment Integrity must be established and the actions necessary to accomplish it per AOP-020
4. DESCRIBE the criteria and methodology used to vent the RHR pumps following a loss of RCS inventory per AOP-020
5. STATE the two methods provided to regain control of RHR suction isolation valves per AOP-020
6. SUMMARIZE the lessons learned from
   a. SOER 85-4, Loss or Degradation of RHR Capability in PWRs
   b. SOER 88-3, Losses of RHR with Reduced Reactor Vessel Water Level at PWRs
7. DESCRIBE the Pressurizer Surge Line Flooding concern

B. Reason for study

In order for the operator to safely operate the plant, a good working knowledge of the Abnormal Operating Procedures is required. The operator must know what to do in abnormal conditions to be able to return the plant to a normal operating configuration

Initial Conditions:

- Surveillance testing is in progress on Containment Spray Train "A".
- "A" Containment Spray Pump is running.
- 1CT-24, Containment Spray Eductor Test Valve, is open for testing.
- 1CT-50, Containment Spray Header Isolation Valve, is closed.

Current conditions:

- A LOCA is occurring.
- RCS pressure is 1600 psig.
- Containment Pressure is 7.5 psig.

Which ONE (1) of the following describes the status of the Containment Spray system?

	1CT-24	1CT-50
A.	OPEN	OPEN
B.	CLOSED	OPEN
C.	OPEN	CLOSED
D✓	CLOSED	CLOSED

D is correct. 1CT-24 will close on Phase A if it is open. 1CT-50 will open on High 3 pressure. Current pressure is above HIGH-2 but below HIGH-3 (10 psig)
A is incorrect. Plausible because eductor valve is open to start with, and high containment pressure will open spray discharge valve
B is incorrect. Eductor valve will close, but pressure is not high enough for the spray discharge valve to be open
C is incorrect. Spray discharge will be closed, but eductor valve receieves a close signal on CIS A

Question Number: 15

Tier 2 Group 1

Importance Rating: RO 4.3

Technical Reference: CSS Text
Proposed references to be provided to applicants during examination: None
Learning Objective: CSS Text obj 6
10 CFR Part 55 Content: 41.5

Comments:

026 A301
R0 15

System Operation

Modes of Operation

The CSS has two principle modes of operation. These are:

1. The initial injection mode, during which time the CSS sprays borated water which is taken from the RWST (sodium hydroxide is introduced through the eductors).

2. The recirculation mode which is initiated when a low-low level (23.4%) is reached in the RWST. Pump suction is automatically transferred from the RWST to the containment recirculation sump.

SYSTEM ACTUATION

The CSS receives two signals from the Engineered Safety Features Actuation System (see ESFAS Student Text) which are essential for system actuation. The two signals are the Phase 'A' Containment Isolation Signal ('T' Signal) and the Containment Spray Actuation Signal (CSAS). Before CSS operation may begin, a certain system lineup must be present. An abnormal CSS lineup would only occur during system testing. The Phase A 'T' signal assures the presence of this lineup by automatically actuating (if necessary) the following components:

- Containment Spray Pumps - If running, upon receipt of the 'T' signal with associated recirc valve open, the pumps will stop.

- Containment Spray Recirculation Valves (1CT-47 and 1CT-95) - If the CSS is being tested, these valves will be open to provide a flow path back to the RWST. Upon receipt of a 'T' signal they will close.

- Containment Spray Eductor Test Valves (1CT-24 and 1CT-25) - A 'T' signal will close these valves if they are open for eductor testing.

The CSAS is the actuating signal for the containment spray system. CSAS is one of the few energize-to-actuate ESFAS signals. CSAS is an energize-to-actuate signal to prevent inadvertent actuation, for example upon loss of power to SSPS. Containment cleanup and component repair or evaluation from an inadvertent containment spray actuation could result in a lengthy plant recovery. This signal can be initiated by either of two means:

- Manually - There are four momentary control switches for the manual initiation of the CSAS. Initiation of the CSAS will occur when two

026 A3.01
R015

Student Objectives

1. STATE the purpose and design function of the Containment Spray System (CSS). **AO**

2. STATE the function of the following major CSS components. **AO**
   a. Containment spray pumps (include power supply)
   b. Containment spray additive tank
   c. Containment recirculation sumps
   d. Refueling water storage tank
   e. Spray header rings/nozzles
   f. Spray eductors
   g. Cavitating Venturis
   h. System Valves

3. DESCRIBE the modes of operations and major flowpaths of the CSS in accordance with plant operating procedures. **AO**
   a. Injection Phase
   b. Recirculation Phase
   c. Flow testing

4. DESCRIBE the indications and controls for the CSS including:
   a. Manual actuation of CSAS
   b. Reset of CSAS

5. STATE the conditions that will cause a Containment Spray Actuation Signal (CSAS) including coincidence and setpoints.

6. Given a set of plant conditions, PREDICT the response of the CSS and the effect on overall plant conditions with regard to the following automatic control functions, signals, and interlocks:
   a. Containment Spray Actuation Signal (CSAS)
   b. Phase A Isolation
   c. Spray Additive Tank Empty

Given the following:

- The unit is at 95% power.
- "A" RHR Pump is being run for quarterly surveillance test on recirculation to the RWST.
- CCW Surge Tank level is slowly decreasing.
- CCW Surge Tank Makeup Control Valve has been opened.
- VCT level is increasing with makeup secured.

Which ONE (1) of the following describes the location of the CCW leak?

A. RCP Thermal Barrier Heat Exchanger

B.✓ Seal Return Heat Exchanger

C. "A" RHR Heat Exchanger

D. Letdown Heat Exchanger

B is correct, as it is at a lower pressure than CCW, and a leak will go to the VCT.

C is incorrect. RHR HX is incorrect because RHR pressure will be higher, but flow will not go to the VCT, it show up in the CCW surge tank

A is incorrect because CCW surge tank level would be rising if a leak were in the tBXX

D is incorrect because a leak in the Letdown HX would result in the CCW surge tank level rising.

Ability to determine and interpret the following as they apply to the Loss of Component Cooling Water: The cause of possible CCW loss

Question Number: 46

Tier 1 Group 1

Importance Rating: RO 2.9

Technical Reference: AOP-014
Proposed references to be provided to applicants during examination: None
Learning Objective: LPAOP3-14 Obj 2
10 CFR Part 55 Content: 41.7

Comments:
Prairie Island WTSI Bank item 44438 (Developed by others)

Editorial mods for Harris

026AA2.02
R046

1.0 DISCUSSION (continued)

6. Tripping the anti-pumping logic by stopping and holding the switch until header pressure drops below 52 psig prevents the CCW pumps from auto-starting on low pressure. Cycling the Control Power knife switches for the affected pump will reset the anti-pumping logic.

7. Should a loss of CCW to the RCPs occur, the CVCS continues to provide seal injection flow to the RCPs; the seal injection flow is sufficient to prevent damage to the RCP seals with a loss of thermal barrier cooling. However, the loss of CCW to the motor bearing oil coolers will result in an increase in oil temperature and a corresponding rise in motor bearing temperature. It has been demonstrated by testing that the RCPs will incur no damage as a result of a CCW flow interruption of 10 minutes. Tripping the RCPs if CCW cannot be re-established within 10 minutes is required by FSAR Sections 5.4.1.3.3 and 9.2.2.5.

8. Loss of CCW to the RCPs will require a plant shutdown or trip and stopping of the RCPs to prevent damage to the pumps or motors. Additional actions required by AOP-018, Reactor Coolant Pump Abnormal Conditions, would also have to be performed.

9. Loss of CCW to non-essential equipment will require securing that equipment and placing alternate equipment in service if required for continued plant operation.

10. The design volume of the CCW surge tank is to allow for three (3) minutes postulated flow from a ruptured thermal barrier heat exchanger before the shutting of 1CC-252.

11. Leakage in excess of 15.8 gph per train could exceed the capacity of the surge tank and render CCW inoperable. Surge tank capacity is based on the time required to align makeup flow from the RMWS under post-accident conditions.

12. Due to pressure differential, these systems could leak into the CCW System:
    - RHR Heat Exchanger (if RHR pressure exceeds CCW pressure)
    - RHR Pump Seal Cooler (if RHR pressure exceeds CCW pressure)
    - RCP Thermal Barrier Coolers
    - Letdown Heat Exchangers
    - Excess Letdown Heat Exchangers
    - Gross Failed Fuel Detector
    - Primary Sampling (through Sample Coolers)

026AA2.02
R046

1.0 DISCUSSION (continued)

13. Due to pressure differential, the CCW System could leak into these systems/components:
    - RHR Heat Exchanger (if RHR pressure is less than CCW pressure)
    - RHR Pump Seal Cooler (if RHR pressure is less than CCW pressure)
    - RCP Thermal Barrier Coolers (if RCS pressure is low)
    - Seal Water Heat Exchanger
    - RDCT Heat Exchangers
    - Spent Fuel Pool Cooling
    - RCP Oil Reservoirs
    - BRS Evaporator
    - ESW at the CCW Heat Exchangers

OSI-PI Guidance

When OSI-PI displays, mimics, trends, and/or spreadsheets are used, the following guidance applies (reference CSP-NGGC-0004 for details):

- Quality Level D – B is included in the file name and/or display of OSI-PI functions.

  Example: HNP_SWQL_D_POM_AOP-018.xls is Quality Level D.
- Qualified OSI-PI functions may be used alone to support specified requirements.
- Non-Qualified OSI-PI functions shall only be used along with diverse indication.
- Qualified OSI-PI functions should be accessed using Start → Progress Energy PI Displays → Harris Qualified button. (This feature is under development and should always be used when the function is available.)
- If the desired OSI-PI function is not available using the Harris Qualified button, it can be accessed by the following methods (Quality Level indicated as described above):
  - Start → Progress Energy PI Displays → NGG Plant Status → HNP Plant Status → HNP POM Group Trends
  - Start → Programs → Business Apps → HNP → HNP POM Group Trends

026 AA2.02
RO 46

1. INTRODUCTION

Lesson Objectives TP

A. Lesson objectives

Upon completion of this lesson, the student should be able to

1. IDENTIFY Entry Conditions required for entry into AOP-014, Loss of Component Cooling Water
2. IDENTIFY locations which by virtue of normal operation ΔP are a potential source of CCW in/out leakage per AOP-014, Loss of Component Cooling Water
3. Concerning the CCW pumps, DESCRIBE briefly why AOP-014 has steps requiring the operator to
   - Hold the control switch to stop until discharge pressure is below a certain value, and
   - Cycle control power for the breaker
4. DESCRIBE the expected response of CCW Surge Tank level indication to a leak in the CCW system
5. SUMMARIZE lessons learned from the related industry events below
   - SHNPP LER 90-018, Loss of CCW Inventory Due to Lifted RCDT HX Valve Caused by Incorrect Relief Valve Setpoint
   - SHNPP LER 90-019, Potential Loss of RHR System due to Loss of CCW Caused by System Design
6. Given a set of Entry Conditions, and a copy of AOP-014, DETERMINE the appropriate response

B. Reason for study

In order for the operator to safely operate the plant, a good working knowledge of the Abnormal Operating Procedures is required. The operator must know what to do in abnormal conditions to be able to return the plant to a normal operating configuration

Which ONE (1) of the following describes the design basis of the Containment Spray System?

Maintains Containment Pressure and Temperature below design limits following...

A. the largest RCS break size OR Main Steam Line break size inside Containment.
Removes iodine by delivering borated water at a low pH through the spray header.

B. the largest RCS break size COINCIDENT with Main Steam Line break size inside Containment.
Removes iodine by delivering borated water at a low pH through the spray header.

C. the largest RCS break size OR Main Steam Line break size inside Containment.
Removes iodine by delivering borated water at a high pH through the spray header.

D. the largest RCS break size COINCIDENT with Main Steam Line break size inside Containment.
Removes iodine by delivering borated water at a high pH through the spray header.

C is correct. Containment Spray will maintain Containment below design for either a LBLOCA (DECLB) or MSLB. pH is >7 which will remove iodine
A is incorrect. Correct accident but incorrect pH
B is incorrect. Both events coincident with each other are beyond design basis for the CSS. pH is high, not low
D is incorrect. Both events coincident with each other are beyond design basis for the CSS. pH is correct
Conduct of Operations: Knowledge of system purpose and/or function.

Question Number: 88

Tier 2 Group 1

Importance Rating: SRO 2.9

Technical Reference: CSS text, FSAR 6.2.2.1, 6.5.2.1
Proposed references to be provided to applicants during examination: None
Learning Objective: CSS text obj 1
10 CFR Part 55 Content: 43.1, 2

Comments:

10CFR55.43(b).1 because the design basis for the system describes a limitation of the facility license. 10CFR55.43(b).2 because this is described in technical specification bases

026 62.1.27

Figure 1: Containment Spray System Overview

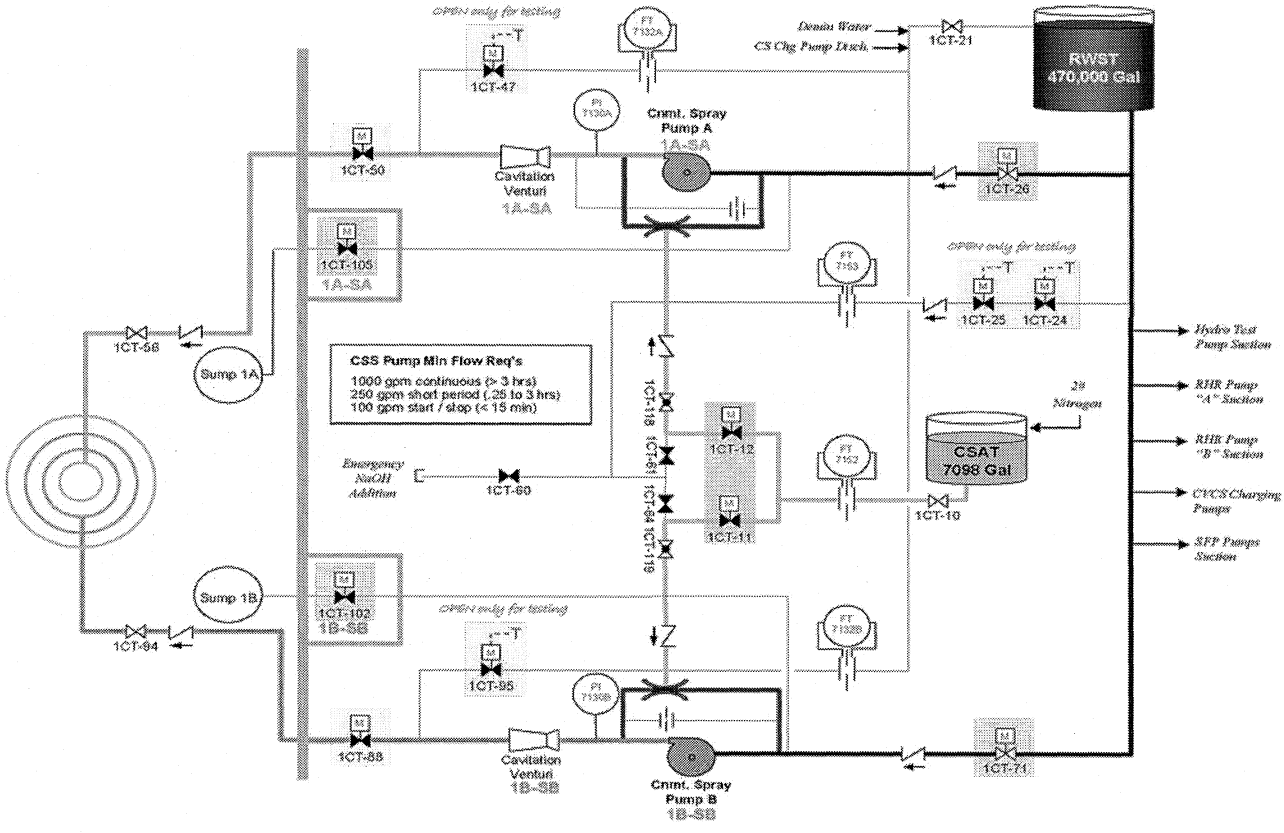

DESIGN BASES

There are a number of design bases associated with the CSS (Reference FSAR Sections 6.2.2.1 and 6.5.2.1). The CSS is capable of removing heat from containment to keep the containment temperature and pressure below design conditions for any size break up to and including a double ended break of the largest reactor coolant pipe, or a double ended break of the largest main steam line inside containment.

It should be noted that the heat removal capacity of either the Containment Spray System or the Containment Cooling System is sufficient to maintain the containment temperature and pressure below design conditions for any size break.

Another design basis of the CSS deals with the chemical compatibility of the spray solution with materials inside containment. One concern here is with the possible clogging of the spray nozzles by colloidal suspension or precipitates resulting from chemical interactions. Aluminum is the most susceptible

026 62.1.27
SRO 88

Student Objectives

1. STATE the purpose and design function of the Containment Spray System (CSS). **AO**

2. STATE the function of the following major CSS components. **AO**
   a. Containment spray pumps (include power supply)
   b. Containment spray additive tank
   c. Containment recirculation sumps
   d. Refueling water storage tank
   e. Spray header rings/nozzles
   f. Spray eductors
   g. Cavitating Venturis
   h. System Valves

3. DESCRIBE the modes of operations and major flowpaths of the CSS in accordance with plant operating procedures. **AO**
   a. Injection Phase
   b. Recirculation Phase
   c. Flow testing

4. DESCRIBE the indications and controls for the CSS including:
   a. Manual actuation of CSAS
   b. Reset of CSAS

5. STATE the conditions that will cause a Containment Spray Actuation Signal (CSAS) including coincidence and setpoints.

6. Given a set of plant conditions, PREDICT the response of the CSS and the effect on overall plant conditions with regard to the following automatic control functions, signals, and interlocks:
   a. Containment Spray Actuation Signal (CSAS)
   b. Phase A Isolation
   c. Spray Additive Tank Empty

33. 027 AK2.03 001/MODIFIED//HIGHER//RO/HARRIS/7/2007/NO

Given the following:

- The unit is at 100% power.
- All control systems are in their normal alignments, with the exception of the Pressurizer Pressure Master Controller, which is in MANUAL.
- The Pressurizer Pressure Master Controller output fails LOW.

Which ONE (1) of the following describes the effect on RCS pressure and the reason for that effect?

A. RCS pressure rises due to pressurizer heater energization; pressure rise controlled by PZR spray valve operation.

B✔ RCS pressure rises due to pressurizer heater energization; pressure rise terminated by PZR PORV operation.

C. RCS pressure lowers due to pressurizer heater deenergization and PZR spray valve operation ONLY

D. RCS pressure lowers due to pressurizer heater deenergization, PZR spray valve operation, and PZR PORV operation.

B is correct because spray valves are operated from the controller but 2 PORVs are not. If the output fails low, it will call for rising pressure. Heaters will energize and actual RCS presure will rise. The rise will be terminated by PORV operation (2).

A is incorrect because spray valves are controlled by the output of the controller, which has failed low.

C is incorrect because it is representative of a setpoint failure rather than an output failure. The opposite effect occurs for a setpoint failure

D is incorrect because of the same reason as C. If the setpoint failed low, a PORV may operate if the controller deviation called for PORV operation.

Question Number: 47

Tier 1 Group 1

Importance Rating: RO 2.6

Technical Reference: AOP-019; PZR text
Proposed references to be provided to applicants during examination: None
Learning Objective: LPAOP3-19 Obj 4
10 CFR Part 55 Content: 41.7

Comments:

027AK2.03
R047

CHAPTER 1

System Overview

System Purpose

The purpose of the PRZPCS is to maintain saturated conditions in the PRZ to maintain RCS pressure in the appropriate control band. RCS pressure is maintained high enough to prevent saturation of the bulk reactor coolant. This helps prevent departure from nucleate boiling (DNB), which helps prevent fuel and cladding from damage from overheating. RCS pressure is maintained low enough to prevent overpressurization, which could lead to structural failure of the RCS and a loss of coolant accident.

Overview

PRESSURIZER PRESSURE CONTROL SYSTEM

Two channels, PT-444 and PT-445, are used for Pressurizer pressure control functions (SD-100.03, Figure 7.7). PRZ pressure is controlled by a master pressure controller, which receives input from the controlling pressure channel PT-444 (not selectable). The controller automatically maintains the desired pressure by controlling four groups of PRZ heaters, two PRZ spray valves and one PRZ PORV (PCV-444B). Of the four groups of heaters, one is designated as the control group while the other three are backup groups. The output of the variable control group heaters varies depending on the demand signal from the master pressure controller; the backup heaters are either turned ON or OFF. Each spray valve has it own controller, which receives an input from the master pressure controller when in automatic. PRZ PORV (PCV-444B) will automatically open when the output of the master pressures controller reached 87.5% (corresponds to 100 psig above controller setpoint). The other two PORVs are controlled by bistables from PT-445 that actuate at a pressure setpoint of 2335 pisg. The backup heaters, spray valves and all PZR PORVs can be operated in manual, independent of the master pressure controller.

PRZ Auxiliary Spray, 1CS-487, from the Chemical and Volume Control System (CVCS) is not controlled by the system, but is an alternate manual means available to the operator for providing a spray-related pressure decrease.

PRESSURIZER PRESSURE PROTECTION SYSTEM

Three safety-related pressure channels, PT-455, PT-456 and PT-457, are used for Pressurizer pressure protection functions (SD-100.03, Figure 7.8). They provide the following RPS and ESFAS functions:

027 AK2.03
RO 47

I. INTRODUCTION

Lesson Objectives TP

A. Lesson objectives

Upon completion of this lesson, the student should be able to

1. State the purpose of AOP-019, Malfunction of RCS Pressure Control
2. RECOGNIZE entry conditions that are associated with AOP-019, Malfunction of RCS Pressure Control
3. STATE the immediate operator actions required for AOP-019, Malfunction of RCS Pressure Control
4. Given a situation with a bubble in the pressurizer and a suspected malfunction in the Pressurizer Pressure Control System, EVALUATE the effect on the plant per AOP-019 and AOP-019 background document.
5. Given a situation in solid plant operation affecting charging, letdown, or RCS temperature, EVALUATE the effect on RCS pressure per AOP-019 and AOP-019 background document.

B. Reason for study

In order for the operator to safely operate the plant, a good working knowledge of the Abnormal Operating Procedures is required. The operator must know what to do in abnormal conditions to be able to return the plant to a normal operating configuration

II. PRESENTATION

A. Overview

1. AOP-019, Malfunction of RCS Pressure Control
   a. Immediate Actions
   b. Pressure Control Malfunctions while Operating with a Pressurizer Bubble
   c. Pressure Control Malfunctions during Solid Plant Operation
2. Industry events
3. Summary
4. Evaluation review

Instructor Notes

-AOP Basis Document should be made available to student.

Given the following:

- The unit is at 100% power.
- "A" EDG is out of service for maintenance.
- A large break LOCA has occurred.

Which ONE (1) of the following describes the effect on Containment if B train Hydrogen Recombiner loses power after SI initiates?

Containment hydrogen concentration will _____

A. remain below 4%.

B. increase to greater than 4% but less than 8%.

C. increase to greater than 4 but less than 8% UNLESS Containment Purge is placed in service.

D. increase to greater than 8% UNLESS Containment Purge is placed in service.

A. Correct. A single recombiner is designed to maintain H2 < 4% during a design basis LOCA.
B. Incorrect. 4% is as high as concentration will get with only 1 recombiner in service
C. Incorrect. Purge not required to maintain design basis.
D. Incorrect. Purge not required to maintain design basis
Knowledge of the effect that a loss or malfunction of the HRPS will have on the following: Hydrogen concentration in containment

Question Number: 31

Tier 2 Group 2

Importance Rating: RO 3.3

Technical Reference: H2 Recomb text
Proposed references to be provided to applicants during examination: None
Lesson Objective PAHC Text Obj 3
10 CFR Part 55 Content: 41.5

Comments:
SQN 2007 NRC, modified 1 distractor

028K3.01
R031

CHAPTER 1

System Overview

Overview

This text presents information about the systems the operator will use if an accident occurs causing hydrogen generation in containment. If this improbable event occurs, it will be important to be able to monitor the hydrogen concentration in the containment atmosphere and to prevent it from rising to levels that could support combustion. A hydrogen burn or explosion would cause rapidly rising temperature and pressure inside containment. The pressure rise could challenge containment integrity. The temperature rise could challenge the operability of components important to the safety of the reactor. The lower explosive limit for Hydrogen in dry air is 4% the upper explosive limit is 75% The auto ignition temperature for Hydrogen is 1075°F

Review

Recall an LOCA will produce hydrogen gas in containment primarily by four mechanisms (See Figure 1):

- Release of dissolved Hydrogen from the reactor coolant.
- Zinc-water reactions
- Decomposition of water by radiation.
- Oxidation of metals in containment

There are four systems supporting the functions of monitoring and controlling post-accident hydrogen concentration in containment. The safety-related Hydrogen Recombiner and the non-safety related post-accident Hydrogen purge systems provide the primary and backup means to maintain the Hydrogen concentration below 4% by volume. The safety-related post-accident Hydrogen monitoring system gives the operator a way to monitor the hydrogen concentration in the containment. The containment cooling system supports both of these functions by mixing the atmosphere to ensure there are no high hydrogen concentration pockets in the containment. When it is not operating, natural convection will provide some mixing of the atmosphere. The operation of the cooling system is not discussed in this text as it is covered in the containment ventilation text.

028K33.C
2031

Figure 1: Post LOCA Hydrogen Accumulation

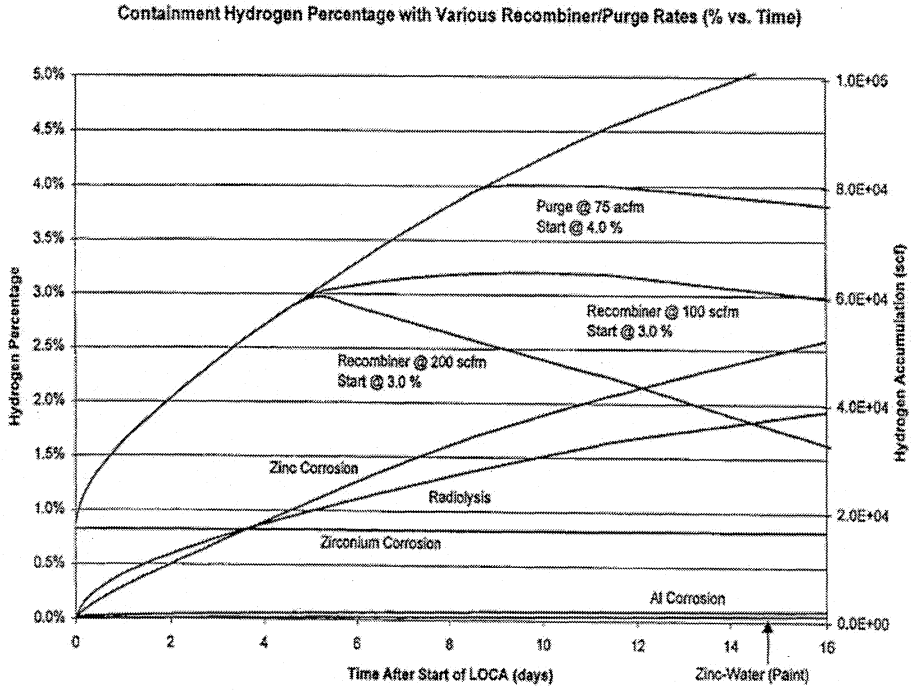

Except for the containment cooling system, none of these systems are normally in service. They are surveilled periodically to verify their operability, but they are normally idle in a standby lineup. In the event of an accident, the emergency operating procedures will direct placing them into service.

POST-ACCIDENT HYDROGEN MONITORING SYSTEM

The purpose of the post-accident Hydrogen monitoring system, sometimes referred to as the containment Hydrogen monitoring system, is to provide a means of monitoring hydrogen buildup in six locations inside the containment. It can automatically sample these six points in seqence and monitors, displays and annunciates the Hydrogen concentration, temperature and pressure of the samples.

It normally is aligned to sample the points automatically and return the sample to the containment. It can also direct the sample return flow to the remote sample dilution panel. This panel provides a means to draw grab samples of the containment atmosphere for more detailed analysis. The panel is configured to minimize personnel radiation exposure while doing this.

028 K3.01
R031

Student Objectives

1. STATE the purpose and design function of the Post-Accident Hydrogen Control System (PAHCS), including the following subsystems:
   a. Post Accident Monitoring (PAMS)
   b. Hydrogen Recombiners (HRS) **AO**
   c. Post Accident Hydrogen Purge (PAHP) **AO**

2. STATE the function of the following PAHCS major components:
   a. Hydrogen analyzer cabinets (PAMS)
   b. Remote control cabinets (PAMS)
   c. Remote sample dilution panel (PAMS)
   d. Electric Hydrogen Recombiner (HR) **AO**
   e. Power panel (HR) **AO**
   f. Control Panel (HR) **AO**
   g. PAHP Filter Train **AO**

3. DESCRIBE the PAHCS normal operation, including operation sequence and normal parameters, and expected system response. Specifically include:
   a. Startup of the Hydrogen monitors
   b. Shutdown of the Hydrogen monitors
   c. Manually taking readings (PAMS)
   d. Hydrogen analyzer electrochemical cell operation, including corrections to determine hydrogen concentration
   e. HR startup
   f. HR shutdown
   g. Determination of power setting (HR)
   h. Operation of the PAHP with high hydrogen concentrations

4. DESCRIBE the modes of operations and major flowpaths of the PAHCS in accordance with plant operating procedures. Specifically include:
   a. Sampling flowpaths from each sample point (PAMS)
   b. Hydrogen analyzer discharge to containment flowpath.

The unit is at 100% power when the following events occur:

- A reactor trip signal is generated.
- Reactor power is approximately 78%.
- Tave is increasing.
- Main turbine load is 700 MWe.
- Feedwater flow continues to operate as designed.
- The RO is manually inserting rods.

Which ONE (1) of the following statements describes the EOP basis in FRP-S.1 (Response to Nuclear Power Generation / ATWS) for immediately tripping the turbine?

A.✓ Prevent an uncontrolled RCS cooldown.

B. Ensure insertion of negative reactivity.

C. Prevent turbine overspeed when the main generator trips.

D. Minimize the peak pressure transient for the event.

A. Correct: The basis in the EOPs is to prevent an uncontrolled cooldown and causing a positive reactivity addition
B. Incorrect: Tripping the turbine will provide for negative reactivity insertion, but basis for tripping is cooldown
C. Incorrect: If the generator tripped without a turbine trip, an overspeed would result. Tripping the turbine would mitigate the effect but not required for that reason
D. Incorrect: The peak pressure will actually be greater if the turbine is tripped early in the transient, but minimizing peak pressure is a goal of FRP-S.1.
Knowledge of the operational implications of the following concepts as they apply to the ATWS: Definition of reactivity

Question Number: 48

Tier 1 Group 1

Importance Rating: RO 2.6

Technical Reference: FRP-S.1 BD
Proposed references to be provided to applicants during examination: None
Learning Objective: LPEOP3-15 Obj 5
10 CFR Part 55 Content: 41.10

Comments:

Catawba 2003 NRC Exam
WTSI Bank 54783 (developed by others) modified distractors

Objective #5

e. Selected EOP step bases - presented in question format to facilitate group discussion

Q1 What is the basis for the order of preference for the turbine trip?

A1 Arranged to rapidly stop the cooldown (SDD)

Q2 Why is tripping of the RDMG last in order of preference?

A2 MG flywheels would delay rod insertion (SDD)

Q3 Why is tripping the turbine an immediate action?

A3 Although the turbine trip will increase RCS pressure for most events, it is a required action for a loss of MFW to maintain SG inventory. Since diagnosis of the event is not feasible when immediate actions are required, the turbine is tripped for all ATWS events.

Q4 What is the basis for checking RCS pressure when emergency borating? Does this apply during boration via SI?

A4 If pressure exceeds the PORV setpoint, boration from CVCS or SI is assumed to be insufficient. It applies during boration via SI

Q5 Why is the required AFW flow greater than other EPPs?

A5 It is required to remove heat generated from power operation

Q6 Can SI be terminated in later EPPs if SDM is not adequate?

A6 Yes, if any uncontrolled cooldown is stopped, SI can be terminated using EOP guidance. If possible, continue boration by alternate means

D. FRP-S.2, Response to Loss of Core Shutdown

WOG FR-S.2

1. Use associated WOG guideline to facilitate discussion of the following subjects

a. Purpose

– Provides actions to restore the core to an adequate shutdown condition

I. INTRODUCTION

A. Lesson objectives

Upon completion of this lesson, the student should be able to

1. DESCRIBE the purpose of the following EOPs, including type of event for which they were designed, and the major actions performed

- FRP-S.1
- FRP-S.2

2. LIST, from memory, all immediate action steps from these EOPs, including all RNOs

3. DEMONSTRATE the below-assumed operator knowledge from the HNP Step Deviation Documents and the WOG ERGs that support performance of EOP actions

   a. How to locally trip the reactor

   b. Method of inserting control rods from the MCB

   c. Meaning of controlled cooldown

   d. Effect of core age on cooldown reactivity

   e. Indications of under-compensation

4. Given the title of an EOP foldout item, STATE the parameters to be monitored for implementations

5. Given the following EOP steps, notes, and cautions, DESCRIBE the associated basis

   a. Order of preference for turbine trip steps from the MCB

   b. Order of preference for steps that locally trip the reactor

   c. Tripping the turbine as an immediate action

   d. RCS pressure check during emergency boration

   e. Increased AFW flow requirements

   f. SI termination without adequate SDM

   g. CSF status tree decision points

The unit is in Mode 3.

In accordance with Technical Specifications, which ONE (1) of the following describes the LCO requirements associated with the Containment Purge System?

	42 inch makeup supply and exhaust valves	**8 inch makeup supply and exhaust valves**
A.	must be sealed closed.	must be sealed closed.
B.	may be opened for safety-related reasons only.	must be sealed closed.
C.	must be sealed closed.	may be opened for safety-related reasons only.
D.	may be opened for safety-related reasons only.	may be opened for safety-related reasons only.

A is incorrect. Correct for 42 inch valves
B is incorrect. Opposite of actual requirement
C is correct.
D is incorrect. Correct for 8 inch valves.

Lower cognitive level memory of TS requirements for Purge System
Equipment Control: Knowledge of limiting conditions for operations and safety limits.

Question Number: 32

Tier 2 Group 2

Importance Rating: RO 3.4

Technical Reference: TS 3.6.1.7
Proposed references to be provided to applicants during examination: None
Learning Objective: CVS Text OBj 10
10 CFR Part 55 Content: 43.2

Comments:

CONTAINMENT SYSTEMS

CONTAINMENT VENTILATION SYSTEM

LIMITING CONDITION FOR OPERATION

3.6.1.7 Each containment purge makeup and exhaust isolation valve shall be OPERABLE and:

a. Each 42-inch containment preentry purge makeup and exhaust isolation valve shall be closed and sealed closed, and

b. The 8-inch containment purge makeup and exhaust isolation valve(s) may be open for safety-related reasons only.

APPLICABILITY: MODES 1, 2, 3, and 4.

ACTION:

a. With a 42-inch containment preentry purge makeup and/or exhaust isolation valve open or not sealed closed, close and/or seal close that valve or isolate the penetration(s) within 4 hours, otherwise be in at least HOT STANDBY within the next 6 hours and in COLD SHUTDOWN within the following 30 hours.

b. With the 8-inch containment purge makeup and/or exhaust isolation valve(s) inoperable for any reason other than leakage integrity, close the open 8-inch valve(s) or isolate the penetration(s) within 4 hours, otherwise be in at least HOT STANDBY within the next 6 hours, and in COLD SHUTDOWN within the following 30 hours.

c. With a containment purge makeup and/or exhaust isolation valve(s) having a measured leakage rate in excess of the limits of Specification 4.6.1.7.2, restore the inoperable valve(s) to OPERABLE status within 24 hours, otherwise be in at least HOT STANDBY within the next 6 hours, and in COLD SHUTDOWN within the following 30 hours.

02962.2.22

CHAPTER 7

Technical Specifications

Relevant Tech Specs

This section contains a brief summary of the Technical Specifications associated with the CVS. Refer to the applicable Tech Spec for a complete understanding of the LCO, surveillance requirements and bases.

3/4.6.1.5, Containment Average Temperature - Containment average air temperature shall not exceed 120°F in Modes 1-4. With the containment average air temperature greater than 120°F, it must be reduced to within the limit within 8 hours or the plant must be shutdown. The limitation on temperature ensures that it does not exceed the initial conditions assumed in the safety analysis for a LOCA or steam line break in Containment. Sensitivity studies for these accidents show that a higher initial energy level in Containment causes peak containment pressure to be higher during a LOCA or steam line break in Containment. A higher initial temperature would cause a higher initial energy level in Containment (refer to FSAR 6.2.1.1.3.2 for more information.

3/4.6.1.4, Containment Internal Pressure - Containment pressure must be maintained between -1.0 inches water gauge and 1.6 psig in Modes 1-4. If outside the limits, pressure must be restored within **one hour**. These limits ensure containment does not exceed it design negative pressure (-2.0 psig) and does not exceed the design pressure of 45 psig during accident conditions.

3/4.6.1.7, Containment Ventilation System - In Modes 1-4, each containment purge isolation valve shall be operable, the 42-inch pre-entry purge valves shall be shut (and sealed shut), and the 8-inch normal purge valves may be open for safety-related reasons only (e.g. containment pressure control or reduction of airborne activity to facilitate personal access for surveillance or maintenance activities). Inoperable valves must be restored to operable within the allowable outage time otherwise the plant must be shutdown. The 8-inch valves are allowed to be open because they are capable of closing during a LOCA or steam line break accident (the 42-inch valves are not).

3/4.6.3, Containment Isolation Valves - Each containment isolation valve specified in PLP-106, Technical Specifications Equipment List Program shall be operable with the required isolation times in Modes 1-4. This Tech Spec applies to all normal and pre-entry purge containment ventilation isolation

g. CPPE units, including E-5 fans

h. Branch damper from RAB normal exhaust

i. Containment vacuum relief valves

6. Given a set of plant conditions, PREDICT the response of the CVS and the effect on overall plant conditions with regard to the following:
   a. Containment ventilation isolation signal occurs
   b. High radiation in Containment
   c. Containment Phase A occurs

7. DESCRIBE the maximum containment atmospheric conditions that are allowed during normal full power operation including the reason for each limit.

8. EXPLAIN the conditions which require a radioactive release permit prior to operating components associated with the Containment Ventilation System.

9. DESCRIBE how the Containment Ventilation System is used in the response to, and mitigation of, events as described in the applicable AOPs and EOPs. **AO**

10. STATE the Limiting Condition of Operation (not including the Actions) for the following Technical Specifications as they relate the CVS.
    a. 3.6.1.1, Containment Integrity
    b. 3.6.1.4 Internal Pressure
    c. 3.6.1.5, Containment Air Temperature
    d. 3.6.1.7, Containment Ventilation System
    e. 3.6.3, Containment Isolation Valves
    f. 3.6.5, Vacuum Relief System
    g. 3.9.4, Containment Building Penetrations
    h. 3.9.9 Containment Ventilation Isolation System—Refueling

11. IDENTIFY the entry conditions and the required actions for the preceding Technical Specifications which require actions to be taken in one hour or less.

Given the following:

- The unit is at 100% power.
- Fuel shuffle is on-going in the Spent Fuel Pool in preparation for refueling.
- The following alarm is received:
  - ALB-23-4-17, SPENT FP HI/LO LEVEL
- Level is verified to be at the Low Level alarm setpoint and appears to be stable.

Which ONE (1) of the following describes the implication of this alarm, and an appropriate action to clear the alarm?

SFP level is...

A. below the minimum required by Technical Specifications; makeup to the SFP using Reactor Makeup Water.

B. below the minimum required by Technical Specifications; makeup to the SFP using ESW.

C. above the minimum required by Technical Specifications; makeup to the SFP using Reactor Makeup Water.

D. above the minimum required by Technical Specifications; makeup to the SFP using ESW.

A is incorrect. Option is correct with the exception of TS SFP level. Level is above the TS limit at the alarm setpoint

C is correct. At the SFP LO Level alarm setpoint, level is still 23 feet above the fuel, which is minimum required for TS per 3.9.11. Makeup will either be from Reactor Makeup Water, Demin Water or from RWST.

B and D are incorrect. ESW is a supply to the SFP but only used in emergencies when the other sources are not available.

Question Number: 33

Tier 2 Group 2

Importance Rating: RO 2.7

Technical Reference: ALB-023, OP-116, OP-116.01, TS 3.9.11
Proposed references to be provided to applicants during examination: None
Learning Objective: FPC Text Obj 5,8,9
10 CFR Part 55 Content: 41.10

Comments:

Each system consists of two cooling loops and each containing a cooling pump and heat exchanger. Fuel pool heat exchangers are shell and straight tube type, two pass, with FP cooling on the tube side and 150 psig relief to the drains. This is supplied from the CCWS (shell) located at the elevation of 236" on the FHB.

FUEL POOL MAKEUP

Fuel pool makeup can be from RWST, RMWST, RHT or Demin water. (Note: normally we operate with the gates removed so that all pools are connected. In this alignment filling one pool will fill all pools).

Demin water through 1SF-201 or 2SF-201 to the suction of the purification pumps (purification pumps will normally be off). This is normally locked shut to prevent inadvertent dilution. The RWST is also aligned to the purification pump suction and the purification pump is run while filling. This evolution would require entering the 1 hour action statement of Tech Spec 3.1.2.6 since purification lines are not seismically qualified.

Demin water can also be aligned to skimmer pump 1&4 to fill pools. The RMWST can also be used to make up to the pools through the purification system. The RHT can also be used to make up to the pools. A BRS Evaporator Feed Pump is aligned to discharge to the Units 1 & 4 SFPCS Transfer Canal. (OP-109)

EMERGENCY MAKEUP

During an extreme emergency, a hose is installed between 1SF-76 and the ESW supply (highest pressure) line from either 1A or 1B diesel generator and is located on elevation 236' of the RAB, north end by the service water return valves. This action will fill all pools. This evolution would require the respective train of ESW to be declared inoperable IAW Tech Spec 3.7.4 for Modes 1-4.

The north or south transfer canals can also be filled by using the RWST and the "A" fuel pool cooling pump in the respective system. The loop must be idle before filling. The Cask loading pool and main transfer canals can be filled concurrently by ensuring appropriate gates are removed. Take suction on the RWST and discharge through 1SF-23/2SF-23.

FP COOLING DESIGN TEMPERATURE

Assumptions:

1. Maximum abnormal heat load represents a recent full core offload with all pools filled to capacity.

2. Maximum normal heat load represents full capacity of on and off-site fuel.

3. The assumed LOCA includes a loss of one train of CCW. The remaining train of CCW supplies sufficient flow to supply RHR and FPC with maximum normal heat load.

REFUELING OPERATIONS

3/4.9.11 WATER LEVEL - NEW AND SPENT FUEL POOLS

LIMITING CONDITION FOR OPERATION

3.9.11 At least 23 feet of water shall be maintained over the top of fuel rods within irradiated fuel assemblies seated in the storage racks.

APPLICABILITY: Whenever irradiated fuel assemblies are in a pool.

ACTION:

a. With the requirements of the above specification not satisfied, suspend all movement of fuel assemblies and crane operations with loads in the affected pool area and restore the water level to within its limit within 4 hours.

b. The provisions of Specification 3.0.3 are not applicable.

SURVEILLANCE REQUIREMENTS

4.9.11 At least once per 7 days, when irradiated fuel assemblies are in a pool, the water level in that pool shall be determined to be at least its minimum required depth.

033 A1.01
R033

a. SFP Cooling Pipe Rupture

8. DESCRIBE the interrelationships (physical connections, design functions, flow paths) between the FPCS and other plant systems, including: **AO**
   a. Waste Processing
   b. Boron Recycle System
   c. Containment Spray
   d. Demin Water
   e. Service Water
   f. Primary Makeup
   g. Instrument Air
   h. Component Cooling Water

9. STATE the Limiting Condition of Operation (not including the Actions) for the following Technical Specifications as they relate to the Fuel Pool Cooling System.
   a. 3.9.1, Refueling Operations – Boron Concentration
   b. 3.9.10, Water Level – Reactor Vessel
   c. 3.9.11, Water Level – New and Spent-Fuel Pools

10. IDENTIFY the entry conditions and the required actions for the preceding FPC Technical Specifications which require actions to be taken in one hour or less.

11. Given a copy of the appropriate section of the Technical Specifications, properly APPLY the preceding Technical Specifications and their bases to a given plant condition.

Which ONE (1) of the following describes the Containment Fuel Handling Manipulator Crane Load Interlock circuitry?

A. A single interlock will stop upward hoist travel to prevent exceeding the hoist capacity of 3000 lbs.

B. A single interlock will stop upward hoist travel to prevent exceeding the hoist capacity of 4000 lbs.

C. Multiple interlocks that are selectable by fuel type will stop hoist travel upward to prevent exceeding the hoist capacity of 3000 lbs.

D. Multiple interlocks that are selectable by fuel type will stop hoist travel upward to prevent exceeding the hoist capacity of 4000 lbs.

D is correct. Manipulator Crane has multiple interlocks that prevent exceeding 4000 pound capacity.

A is incorrect. The Aux Hoist is designed in this manner

B is incorrect. Aux Hoist has a single interlock but the actual capacity is correct for the manipulator crane

C is incorrect. Multiple interlocks for the manipulator crane but capacity is 3000 pounds

FHS text describes upward travel overload interlocks on pg 25/26.

Ability to predict and/or monitor changes in parameters (to prevent exceeding design limits) associated with Fuel Handling System operating the controls including: Load limits

Question Number: 93

Tier 2 Group 2

Importance Rating: SRO 3.2

Technical Reference: FHS text
Proposed references to be provided to applicants during examination: None
Learning Objective: FHS Text Obj 6
10 CFR Part 55 Content: 43.7

Comments:

10CFR55.43(b).7 is an SRO item because it relates to the design capacity of Fuel Handling equipment

throughout the length of the cavity as required. The trolley positions the operator platform and mast assembly across the width of the cavity. Thus, the mast and gripper assembly which handles the fuel elements can be positioned anywhere within the refueling cavity as allowed by the permissive and interlocks of the control circuitry.

Figure 11: Fuel in Manipulator Mast over Upender

The gripper assembly is mounted on the bottom of the gripper tube which telescopes into the outer mast. Raising and lowering of the gripper tube is accomplished by the gripper tube hoist. Orientation of the gripper may be accomplished by rotating the outer mast about its center line, but changing the gripper orientation is not necessary to refuel the reactor.

The gripper tube hoist is rated at 4000 pounds. Hoist speed is stepless variable up to 20 fpm. The hoist can be operated at a jog speed of 3 fpm. A handwheel is provided on the hoist for emergency operation during a power outage.

The control console which contains all controls for operation of the bridge, trolley, and hoist mechanisms is located on the operator platform. All drives are equipped with electric brakes which have mechanical releases for emergency manual operation.

The bridge, trolley, and hoist drives are interlocked so that only a single drive is operative at any one time. The bridge speed is stepless variable up to 40 fpm. The trolley speed is stepless variable up to 20 fpm. The bridge and trolley are equipped with jog switches which allow the bridge or trolley to be operated over the reactor core at a speed less than 2 and 3 fpm, respectively. The bridge and trolley jog features are operable over the core area until the mast is in the lower slow zone approximately 6 inches from full down.

An auxiliary hoist of 3000 lb capacity is provided on the bridge monorail for handling accessory equipment (control rod drive unlatching tool, TV cameras,

G34 A1.01
SRO93

thimble plug tool, etc.). The auxiliary hoist operates at two speeds, 22 and 7 fpm. The auxiliary hoist is suspended from a manually operated trolley.

The manipulator crane position is determined through a closed circuit television system. A selector switch is mounted on the face of the control console to select "Bridge" or "Trolley" position as applicable. The corresponding position is then displayed on a monitor which is also mounted on the control console faceplate. One camera, which is mounted on the bridge truck, views bridge position scale plates corresponding to reactor core grid, upender basket and gripper test fixture. The other camera, which is mounted on the trolley truck, views trolley position scale plates also corresponding to the reactor core grid, transfer basket, and RCC change fixture.

LOAD INDICATOR

The load indication system displays the load on the hoist cable using a digital readout located on the front of the control console. A six position load selector switch allows the operator to select a switch position based on the weight of an individual fuel assembly, providing six sets of underload and overload setpoints. Load interlock circuits are provided and will be described below. When the Inner Mast Assembly is being raised or lowered, the operator should continuously watch the load cell digital readout. In the event a large or unexplained change in load appears, the operator should immediately STOP the equipment and evaluate the situation.

TIP

Do NOT board or disembark the Manipulator Crane when the bridge is in motion.

AUX CRANE INDICATIONS

1. Power ON light (White)
2. OFF push button (Red)
3. Drive fault indicator light (Red)
4. Motor overload indicator light (Red)
5. Overload selector switch (three-position key operated)

LOAD SYSTEM INTERLOCK CIRCUITS

Limiting Circuit #1 (V1) is the Slack Cable limiting circuit which is set at 430 lbs descending. When the readout shows 430 lbs or less the hoist will not operate in the down direction and the slack cable light will illuminate on the control console.

Limiting Circuit #2 (V2) is the up Safety Interlock circuit which will stop hoist up travel at 1200 lbs without a fuel assembly.

Switch Position #1 (V3) is the up Overload Interlock circuit which stops hoist up travel at 2366 lbs or above (Framatome with RCCA Assembly Overload).

Switch Position #1 (V9) is the up Underload Interlock circuit which stops hoist down travel at 2096 lbs or under (Framatome with RCCA Assembly Underload).

Switch Position #2 (V4) is the up Overload Interlock circuit which stops hoist up travel at 2244 lbs or above (Framatome without RCCA Assembly Overload).

Switch Position #2 (V10) is the up Underload Interlock circuit which stops hoist down travel at 1974 lbs or under (Framatome without RCCA Assembly Underload).

Switch Position #3 (V5) is the up Overload Interlock circuit which stops hoist up travel at 2440 lbs or above (Dummy Fuel Assembly with RCCA Overload).

Switch Position #3 (V11) is the up Underload Interlock circuit which stops hoist down travel at 2170 lbs or under (Dummy Fuel Assembly with RCCA Underload).

Switch Position #4 (V6) is a Spare Overload Interlock set conservatively at 2244 lbs.

Switch Position #4 (V12) is a Spare Underload Interlock set conservatively at 2170 lbs.

Switch Position #5 (V7) is a Spare Overload Interlock set conservatively at 2244 lbs.

Switch Position #5 (V13) is a Spare Underload Interlock set conservatively at 2170 lbs.

Switch Position #6 (V8) is a Spare Overload Interlock set conservatively at 2244 lbs.

Switch Position #6 (V14) is a Spare Underload Interlock set conservatively at 2170 lbs.

LIMIT SWITCHES AND STOPS

Various limit switches and stops control the trolley and bridge motion of the Manipulator crane to prevent damage to the fuel assembly due to crane operator error. Note that per FHP-020 bypassing of fuel handling equipment interlocks which are not specified in approved procedures shall require permission of the SRO-Fuel Handling and concurrence of the Superintendent-Shift Operations. A set of bumper stops mounted on the inside of the bridge girders limits the trolley reverse movement while over the reactor to prevent the mast from contacting the south vessel guide stud. Another set of bumper stops limits the trolley forward movement while over the RCCA change fixture to prevent the mast from contacting the cavity wall. The bridge west movement is limited by stops mounted on the operating deck. The following list describes the limit switches:

034 A1.01
SRO 93

Student Objectives

1. STATE the purpose and design function of the Fuel Handling and Storage System (FHS). **AO**

2. STATE the function of the following FHS major components: **AO**
   a. Cask crane
   b. Auxiliary crane
   c. Bridge crane
   d. Manipulator crane
   e. New fuel elevator
   f. Fuel transfer car and upender
   g. Fuel storage pools and gates
   h. Fuel storage racks
   i. Rod cluster control assembly changing fixture
   j. Fuel handling tools
   k. Fuel transfer tube

3. DISCUSS industry Operating Experience (OE) related to the FHS. **AO**

4. DESCRIBE the modes of operations and major flowpaths of the FHS in accordance with plant operating procedures:
   a. Receipt of new/spent fuel
   b. Core offload/Reload
   c. Other Fuel Handling operations

5. IDENTIFY associated remote and local instrumentation, indications, alarms, and controls for the FHS.

6. STATE the interlocks, permissives, and automatic control functions of the FHS, and the basis for each.

7. DESCRIBE how the Fuel Handling and Storage is used in the response to, and mitigation of, events as described in the applicable AOPs and EOPs. **AO**

Given the following:

- The unit is in Mode 6.
- Refueling activities are in progress.
- A fuel assembly has been slightly damaged during removal from the core.
- AOP-013, Fuel Handling Accident, is in progress.
- Radiation levels are rising steadily and are currently as follows:
    - REM-01LT-3502A-SA, Cnmt RCS Leak Detection Monitor, is in HIGH ALARM
    - REM-01LT-3502B-SB, Cnmt Pre-Entry Purge Monitor, is in ALERT

Which ONE (1) of the following describes ALL of the additional actions required for plant ventilation in accordance with AOP-013 for the current conditions?

A. Isolate Normal Containment Purge ONLY.

B. Isolate Containment Pre-Entry Purge ONLY.

C. Isolate Normal Purge AND Pre-Entry Purge ONLY.

D. Isolate Normal Purge AND Pre-Entry Purge. Start at least 1 Air Radioactivity Removal Fan.

A is incorrect but plausible because the rad monitor asociated with this function is in alarm
B is incorrect but plausible because the procedure directs isolation if the rad monitor is trending up
C is incorrect because it does not contain ALL required actions

D is correct. If in alarm or rising steadily, then isolate ventilation, pressure relief, and start ARR. (Pressure relief not included in actions because question only asks for ventilation system actions

Question Number: 34

Tier 2 Group 2

Importance Rating: RO 3.3

Technical Reference: AOP-013
Proposed references to be provided to applicants during examination: None
Learning Objective: LPAOP13 Obj 3
10 CFR Part 55 Content: 41.10

Comments:

034A4.01
R034

INSTRUCTIONS	RESPONSE NOT OBTAINED

3.2 Fuel Handling Accident in Containment

CAUTION

Airborne radiation may be present and gas bubbles may be visible if a fuel assembly is ruptured. Personnel should remain clear until Health Physics has established access controls.

NOTE

Kr-85 is the primary radiological concern for fuel off-loaded more than 6 months ago. Kr-85 is a beta hazard and will NOT be detected by personal dosimetry or area radiation monitors.

6. **DIRECT** Health Physics to perform the following:

☐ a. **EVALUATE** any radiation monitor alarms using HPP-780, Radiation Monitoring Systems Operator's Manual.

☐ b. **SURVEY** CNMT.

☐ c. **ESTABLISH** CNMT access controls.

☐ d. **DETERMINE** temporary shielding requirements.

✷☐ 7. **CHECK** REM-01LT-3502A SA, Cnmt RCS Leak Detection Monitor, HIGH alarm CLEARED.

✷ 7. **VERIFY** Normal Containment Purge ISOLATED:

a. **VERIFY** BOTH of the following fans STOPPED:

☐ • AH-82 A, Cnmt Normal Purge Supply

☐ • AH-82 B, Cnmt Normal Purge Supply

(Continued on Next Page)

INSTRUCTIONS	RESPONSE NOT OBTAINED

3.2 Fuel Handling Accident in Containment

7. (continued)

b. VERIFY ALL of the following dampers SHUT:

☐ • 1CP-5 SA, Normal Purge Discharge

☐ • 1CP-9 SA, Normal Purge Inlet

☐ • 1CP-3 SB, Normal Purge Discharge

☐ • 1CP-6 SB, Normal Purge Inlet

✷☐ **8. CHECK** REM-01LT-3502B, Cnmt Pre-Entry Purge Monitor, HIGH alarm CLEARED.

✷ **8. VERIFY** Containment Pre-Entry Purge ISOLATED:

a. VERIFY BOTH of the following fans STOPPED:

☐ • E-5A, Cnmt Pre-Entry Purge Exhaust

☐ • E-5B, Cnmt Pre-Entry Purge Exhaust

b. VERIFY ALL of the following dampers SHUT:

☐ • 1CP-4 SA, Pre-Entry Purge Isolation

☐ • 1CP-10 SA, Pre-Entry Purge Isolation

☐ • CP-D50, Cnmt Pre-Entry Purge Damper

☐ • 1CP-1 SB, Pre-Entry Purge Isolation

☐ • 1CP-7 SB, Pre-Entry Purge Isolation

INSTRUCTIONS	RESPONSE NOT OBTAINED
3.2 Fuel Handling Accident in Containment	
✷☐ **9. CHECK** CNMT area radiation levels STABLE OR DROPPING.	**9. IF** CNMT area radiation levels are steadily rising, **THEN PERFORM** the following: **a. VERIFY** ALL of the following fans STOPPED: ☐ • AH-82 A, Cnmt Normal Purge Supply ☐ • AH-82 B, Cnmt Normal Purge Supply ☐ • E-5A, Cnmt Pre-Entry Purge Exhaust ☐ • E-5B, Cnmt Pre-Entry Purge Exhaust **(Continued on Next Page)**

INSTRUCTIONS	RESPONSE NOT OBTAINED

3.2 Fuel Handling Accident in Containment

9. (continued)

b. VERIFY ALL of the following dampers SHUT:

- ☐ 1CP-5 SA, Normal Purge Discharge
- ☐ 1CP-9 SA, Normal Purge Inlet
- ☐ 1CP-3 SB, Normal Purge Discharge
- ☐ 1CP-6 SB, Normal Purge Inlet
- ☐ 1CP-4 SA, Pre-Entry Purge Isolation
- ☐ 1CP-10 SA, Pre-Entry Purge Isolation
- ☐ 1CP-1 SB, Pre-Entry Purge Isolation
- ☐ 1CP-7 SB, Pre-Entry Purge Isolation
- ☐ 1CB-2, Vacuum Relief
- ☐ CB-D51 SA, Vacuum Relief
- ☐ 1CB-6, Vacuum Relief
- ☐ CB-D52 SB, Vacuum Relief

c. VERIFY at least one of the following Air Radioactivity Removal Fans RUNNING:

- ☐ S-1A
- ☐ S-1B

034 A4.01
RO 34

I. INTRODUCTION

Lesson Objectives TP

A. Lesson objectives

Upon completion of this lesson, the student should be able to

1. STATE the purpose of AOP-013, Fuel Handling Accident
2. RECOGNIZE entry conditions that are associated with AOP-013, Fuel Handling Accident.
3. Given a set of plant conditions and a copy of AOP-013, Fuel Handling Accident, DETERMINE the appropriate response.
4. Explain the Basis for a minimum water level of 23 feet above active fuel.
5. Identify the primary radiological concern for fuel off loaded more than 6 months ago.
6. Recognize the symptoms of a ruptured assembly.

B. Reason for study

In order for the operator to safely operate the plant, a good working knowledge of the Abnormal Operating Procedures is required. The operator must know what to do in abnormal conditions to be able to return the plant to a normal operating configuration.

II. PRESENTATION

A. Overview

1. AOP-013, Fuel Handling Accident
   a. Operator actions
   b. Fuel handling accident in fuel handling building
   c. Fuel handling accident in containment
2. Industry events
3. Summary
4. Evaluation/review

Given the following:

- A safety injection has occurred due to a tube rupture in the "A" Steam Generator.
- Steam Dumps failed to actuate.
- Pressure for each SG has stabilized at 980 psig.
- The "B" and "C" SG PORV's have modulated closed.
- "A" SG PORV remains throttled open.
- All SG PORV controllers are at their required setpoints as defined in PATH-2.

In accordance with Path-2, which one of the following actions is initially required and the reason for the action?

A. Raise the pressure controller setpoint as necessary to ensure the SG PORV closes, because the PORV is a radioactive release point.

B✓ Place the "A" SG PORV pressure controller in MANUAL and close the PORV, because pressure in the ruptured SG should be maintained greater than the pressure in the intact SG's.

C. Locally isolate the "A" SG PORV, because pressure in the ruptured SG should be maintained greater than the pressure in the intact SG's.

D. Locally isolate the "A" SG PORV, because the PORV is a radioactive release point.

B is correct. Below setpoint, PORV should be closed. If pressure in the ruptured SG is lower than the intact SGs, then the RCS leakage could be allowed to continue

A is incorrect. The controller has already failed, raising the setpoint may not provide required effect.

C and D are incorrect. Local isolation would only be performed if manual control did not work as required. Reason in both C and D are partially correct.

Question Number: 35

Tier 2 Group 2

Importance Rating: RO 4.5

Technical Reference: Path-2 BD
Proposed references to be provided to applicants during examination: None
Learning Objective: LPEOP3-2 Obj 4
10 CFR Part 55 Content: 41.10

Comments:

Surry 2003

In order to stop primary-to-secondary leakage, the primary pressure must be reduced to a value equal to that of the ruptured steam generator. In that case:

$$P_{RCS} = PSG_R$$
$$T_{sub} = T_{SAT}(PSG_R) - (T_{RCS} + \text{delta } T/2)$$

where delta T = core temperature rise.

So with leakage terminated, the energy transferred into the steam generators is:

$$Q_{RCS} = UA_I\,[T_{SAT}(PSG_R) - T_{SAT}(PSG_I)] - (T_{sub} + \text{delta } T/2) \times (UA_I + UA_R).$$

Two important conclusions can be derived from this final expression with respect to stable conditions without primary-to-secondary leakage. First, note that in order to remove heat generated in the primary system the ruptured steam generator pressure and RCS pressure must be maintained greater than the non-ruptured steam generator pressures. Secondly, as this pressure differential is increased, so is the subcooling in the primary system. If sufficient pressure differential cannot be maintained, leakage from the RCS will continue since RCS pressure will remain greater than the ruptured steam generator pressure in order to remove decay heat. In that case, the operator is directed to ECA-3.1, SGTR WITH LOSS OF REACTOR COOLANT-SUBCOOLED RECOVERY DESIRED to minimize this leakage.

ACTIONS:

- o Adjust ruptured SG PORV(s) controller setpoint to (0.03) psig
- o Place PORV controller in manual and close ruptured SG(s) PORV
- o Locally isolate ruptured SG(s) PORV
- o Close steam supply valves from ruptured SG(s) to turbine-driven AFW pump
- o Trip or locally isolate, by plant-specific means, turbine-driven AFW pump
- o Close blowdown isolation valves from ruptured SG(s)
- o Close ruptured SG(s) main steamline isolation and bypass valves
- o Close all remaining main steamline isolation and bypass valves
- o Close plant specific valves between the main steam line isolation valves and turbine stop valve and use intact SG(s) PORV for steam dump
- o Transfer to ECA-3.1.
- o Manually close appropriate valves

Instructions	Response Not Obtained

****

CAUTION

o At least one SG must be maintained available for RCS cooldown.

o If the TDAFW pump is the only available source of feed flow, one steam supply valve from an intact SG must be maintained open.

****

6. Isolate Flow From Ruptured SG:

a.	Adjust ruptured SG PORV controller setpoint to 88% (1145 PSIG) AND place in auto.	
b.	Check ruptured SG PORV - SHUT	b. WHEN ruptured SG pressure less than 1145 PSIG, THEN verify SG PORV - SHUT IF SG PORV can NOT be shut, THEN locally shut its block valve.
c.	Shut ruptured SG steam supply valve to TDAFW pump: SG B: 1MS-70 SG C: 1MS-72	c. Perform any of the following (listed in order of preference): o IF at least one MDAFW pump running, THEN trip the TDAFW pump by shutting the trip and throttle valve. o IF the TDAFW pump NOT tripped, THEN locally isolate the steam supply from the ruptured SG to TDAFW pump.
d.	Verify blowdown isolation valves from ruptured SG - SHUT	
e.	Shut ruptured SG main steam drain isolation before MSIV: SG A: 1MS-231 SG B: 1MS-266 SG C: 1MS-301	
f.	Shut ruptured SG MSIV AND bypass valve.	f. GO TO Step 7.
g.	Observe CAUTION prior to Step 8 AND GO TO Step 8.	

I. INTRODUCTION

A. Lesson objectives

Upon completion of this lesson, the student should be able to

1. DESCRIBE the purpose of the PATH-2 EOPs including:
   - The type of event for which it was designed
   - The operator action times for the HNP Design Basis SGTR analyses
   - The major actions performed
2. DEMONSTRATE the below-assumed operator knowledge from the HNP Step Deviation Documents and the WOG ERGs that support performance of EOP actions
   a. Method of isolating SGTR
   b. Absence of any intact SG
   c. Potential for PTS
3. Given the title of an EOP foldout item, STATE the parameters to be monitored for implementation
4. Given the following EOP steps, notes, and cautions, DESCRIBE the associated basis/intent
   a. RCP trip criteria
   b. Isolation of SGTR
   c. Ruptured SG level setpoint where AFW is isolated
   d. Transitions to EPP-020
   e. Maximum rate cooldown
   f. Ruptured SG pressure following cooldown
   g. Termination points for RCS depressurization

B. Reason for study

During an accident, mitigation of the event is dependent upon the ability of operators to effectively implement the emergency procedures. In order to properly utilize these procedures, the operator must be familiar with the procedures, their background and purposes, and their application. Industry experience has demonstrated the possibility of an SGTR and the need for operator training to mitigate this event.

Given the following:

- The plant is in Mode 6.
- Core Off-Load is in progress.
- A Fuel Assembly is dropped in the Spent Fuel Pool. Bubbles are coming to the surface of the SFP and the following Spent Fuel Pool Area radiation monitors are alarming:
    - REM-1FR-3564A and B
    - REM-1FR-3565A and B
    - REM-1FR-3566A and B
    - REM-1FR-3567A and B
- The USCO has entered AOP-013, Fuel Handling Accident.

Which ONE (1) of the following describes the next required actions?

A. Evacuate the Spent Fuel Pool area and secure all SFP area ventilation

B. Determine if there is an unplanned or unmonitored release in progress, and if so, evacuate the Spent Fuel Pool area.

C. Evacuate the Spent Fuel Pool area and verify proper Fuel Handling Building Emergency Exhaust alignment.

D. Determine if stack monitor radiation levels are increasing, and if so, evacuate the Spent Fuel Pool area and perform dose assessment.

C is correct. For SFP fuel handling accident, perform evacuation procedure and ensure FHB ventilation is operating properly. All other actions are performed subsequently.

A is incorrect but plausible for the conditions presented because it is partially correct. FHB ventilation will not be secured; it will be realigned

B and D are incorrect because they require asessment prior to evacuation. These assessments will be performed, but evacuation decisions will not be made based on those results

Question Number: 82

Tier 1 Group 2

Importance Rating: SRO 4.1

Technical Reference: AOP-013
Proposed references to be provided to applicants during examination: NONE
Learning Objective: LPAOP13 Obj 3
10 CFR Part 55 Content: 43.5, 6

Comments:

10CFR55.43(b).5 because the SRO is assessing conditions to determine a course of action. 10CFR55.43(b).6 because these actions are associated with Fuel Handling systems

036AA2.06
SR082

INSTRUCTIONS	RESPONSE NOT OBTAINED

3.1 Fuel Handling Accident in Fuel Handling Building

✱☐ **1. CHECK** that ALL FHB area radiation monitor ALERT AND HIGH alarms are CLEARED.	☐ **1. GO TO** step 3.

CAUTION

All personnel must evacuate the FHB immediately upon receipt of any FHB area radiation alarm, and remain clear until Health Physics has surveyed the area and indicated that it is safe to enter.

☐ **2. PLACE** the fuel assembly being moved in one of the following safe storage locations (listed in order of preference):

- Spent fuel storage racks
- Refueling Canal upender
- Other fuel storage location

3. PERFORM an evacuation of the FHB:

☐ **a. SOUND** local evacuation alarm.

☐ **b. MAKE** the following announcement on the PA:

"Attention plant personnel: A fuel handling accident has occurred in the Fuel Handling Building. All personnel not specifically directed to remain must evacuate the Fuel Handling Building and report to Health Physics at 261 ft WPB RCA exit."

☐ **c. SOUND** local evacuation alarm **AND REPEAT** announcement.

(Continued on Next Page)

INSTRUCTIONS	RESPONSE NOT OBTAINED

3.1 Fuel Handling Accident in Fuel Handling Building

3. (continued)

☐ **d. DIRECT** Health Physics to survey personnel leaving the FHB.

☐ **e. DIRECT** Security to verify all personnel are clear of the FHB.

NOTE

A fuel handling accident or high area radiation levels may require initiation of the HNP Emergency Plan. **[C.1]**

☐ **4. REFER TO** PEP-110, Emergency Classification and Protective Action Recommendations, **AND ENTER** the EAL Network at entry point X.

☐ **5. CHECK** that one or more of the following radiation monitors are in HIGH ALARM:

- REM-1FR-3564A-SA, Spent Fuel Pool SW, SE, SW
- REM-1FR-3564B-SB, Spent Fuel Pool SW, SE, SE
- REM-1FR-3565A-SA, Spent Fuel Pool SW, SE, SW
- REM-1FR-3565B-SB, Spent Fuel Pool SW, SE, SE
- REM-1FR-3566A-SA, Spent Fuel Pool NE, NW, NE
- REM-1FR-3566B-SB, Spent Fuel Pool NW, NE, NW
- REM-1FR-3567A-SA, Spent Fuel Pool NW, NE, NW
- REM-1FR-3567B-SB, Spent Fuel Pool NE, NW, NE

5. IF FHB radiation levels are rising, **THEN REFER TO** OP-170, Fuel Handling Building HVAC, **AND PERFORM** the following:

☐ **a. START** at least one train of FHB Emergency Exhaust using Section 8.2, "Manual Start of Emergency Exhaust System."

☐ **b. GO TO** step 7.

INSTRUCTIONS	RESPONSE NOT OBTAINED

3.1 Fuel Handling Accident in Fuel Handling Building

☐ **6. REFER TO** OP-170, Fuel Handling Building HVAC,
AND VERIFY proper FHB Emergency Exhaust alignment using Section 8.1, "Auto Start of Emergency Exhaust System."

CAUTION

Airborne radiation may be present and gas bubbles may be visible if a fuel assembly is ruptured. Personnel should remain clear until Health Physics has established access controls.

NOTE

Kr-85 is the primary radiological concern for fuel off-loaded more than 6 months ago. Kr-85 is a beta hazard and will NOT be detected by personal dosimetry or area radiation monitors.

7. DIRECT Health Physics to perform the following:

☐ **a. EVALUATE** any radiation monitor alarms using HPP-780, Radiation Monitoring Systems Operator's Manual.

☐ **b. SURVEY** the FHB.

☐ **c. ESTABLISH** access controls for the FHB.

☐ **d. DETERMINE** temporary shielding requirements.

☐ **e. PROVIDE** recommendations for FHB Emergency Exhaust System alignment.

INSTRUCTIONS	RESPONSE NOT OBTAINED
3.1 Fuel Handling Accident in Fuel Handling Building	
☐ **8. CHECK** ALL stack radiation monitor levels NORMAL.	**8. REFER TO** Offsite Dose Calculation Manual **AND PERFORM** the following for any stack monitor showing elevated levels: ☐ **a. DIRECT** Chemistry to perform the following: **(1)** Periodically draw and analyze stack samples. **(2)** Compare any release to ODCM limits. ☐ **b. IF** the monitor is in HIGH ALARM, **THEN REFER TO** PEP-340, Dose Assessment, **AND PERFORM** an offsite dose calculation.

CAUTION

Depending on the severity of the event and the existing valve alignment, placing purification in service may require access to areas where radiological hazards exist. Do NOT enter the SFP area or any area containing purification equipment and piping unless Health Physics has indicated that the area is safe to enter or has provided HP coverage.

9. PERFORM the following: **[A.2]**

☐ **a. REFER TO** OP-116, Fuel Pool Cooling,
AND VERIFY proper operation of Spent Fuel Pool Cooling System.

(Continued on Next Page)

036 AA2.02
SRO 82

I. INTRODUCTION

Lesson Objectives TP

A. Lesson objectives

Upon completion of this lesson, the student should be able to

1. STATE the purpose of AOP-013, Fuel Handling Accident
2. RECOGNIZE entry conditions that are associated with AOP-013, Fuel Handling Accident.
3. Given a set of plant conditions and a copy of AOP-013, Fuel Handling Accident, DETERMINE the appropriate response.
4. Explain the Basis for a minimum water level of 23 feet above active fuel.
5. Identify the primary radiological concern for fuel off loaded more than 6 months ago.
6. Recognize the symptoms of a ruptured assembly.

B. Reason for study

In order for the operator to safely operate the plant, a good working knowledge of the Abnormal Operating Procedures is required. The operator must know what to do in abnormal conditions to be able to return the plant to a normal operating configuration.

II. PRESENTATION

A. Overview

1. AOP-013, Fuel Handling Accident
   a. Operator actions
   b. Fuel handling accident in fuel handling building
   c. Fuel handling accident in containment
2. Industry events
3. Summary
4. Evaluation/review

Given the following:

- An irradiated Fuel Assembly was being withdrawn from the core when it was determined that the assembly was damaged.
- Containment Area Radiation alarms are received.
- AOP-013, Fuel Handling Accident, is entered.

Which ONE (1) of the following describes the FIRST action required, and the reason for the action, in accordance with AOP-013?

A. Evacuate Containment; Containment evacuation takes precedence over all other actions any time AOP-013 is entered.

B. Evacuate Containment; Containment evacuation takes precedence over all other actions ONLY when Containment area radiation monitors are in alarm when AOP-013 is entered.

C. Place the assembly in a safe location; this action is always required prior to any other action to ensure the safety of refueling personnel in Containment.

D. Place the assembly in a safe location; this action is necessary in conjunction with Containment Closure to ensure the accident analysis assumptions for a Fuel Handling Accident will be met.

B is correct. AOP-013 BD states that evac is required when Containment rad monitors are in alarm

A is incorrect because if Ctmt radiation is not rising, then placing the assembly in a safe location will take precedence.

C is incorrect because for the given condition, evacuation comes first. Normally placing the assembly in a safe location would come first if no rad monitors alarming

D is incorrect. Accident severity may be impacted but analysis assumptions will not be impacted by placing the assembly in a safe place

Question Number: 58

Tier 1 Group 2

Importance Rating: RO 3.7

Technical Reference: AOP-013 BD
Proposed references to be provided to applicants during examination: None
Learning Objective: LPAOP13 Obj 3
10 CFR Part 55 Content: 41.10

Comments:

Section 3.2—Fuel Handling Accident in Containment

Step	Description
1	**I: Check all CNMT area radiation monitor alert and high alarms cleared.** **RNO: Go to step 3.** The absence of a CNMT radiation monitor alarm is used as the criterion that determines that personnel can safely remain in CNMT long enough to place the fuel assembly in safe storage in the next step. If one or more radiation monitors are in alarm, however, the RNO directs the operator to skip the next step, which places fuel in safe storage, and move directly to CNMT evacuation. This step is marked as continuously applicable, since the operator is expected to immediately proceed to evacuation steps upon receipt of an alarm.
C2	**I: All personnel must evacuate CNMT immediately upon receipt of any CNMT area radiation alarm, and remain clear until Health Physics has surveyed the area and indicated that it is safe to enter.** This note ensures that the operator is aware of the requirement to immediately evacuate upon receipt of a valid radiation monitor alarm, regardless of the state of fuel storage in the next step. Although safely storing the fuel assembly is desirable, protecting personnel from excessive radiation exposure takes precedence.

Given the following:

- A reactor trip has occurred.
- Main Steam Line Radiation monitor RM-IMS-3592B initially indicated rapidly increasing radiation level.
- Local Steam Line surveys by HP confirm 'B' SG has elevated activity.
- The crew is performing immediate actions of Path-1 when safety injection actuates.
- Parameters on 'B' SG are:
    - Pressure - 550 psig and lowering
    - Level - 40% WR and lowering

Which ONE (1) of the following describes the actions that will be taken with regard to "B" SG?

A. AFW will be isolated to "B" SG in Path-1 or EPP-014, Faulted SG Isolation. The remainder of the SG isolation will occur in Path-2.

B. AFW will be isolated to "B" SG in Path-1 or EPP-014, Faulted SG Isolation. The remainder of the SG isolation will also occur in Path-1 or EPP-014.

C. AFW will be isolated to "B" SG in Path-2. The remainder of the SG isolation will also occur in Path-2.

D. AFW will be isolated to "B" SG in Path-2. The remainder of the SG isolation will occur in EPP-014, Faulted SG Isolation.

B is correct. Since EPP-014 will be performed first, the isolation actions of EPP-014 will occur prior to the SGTR isolation in Path-2.
A is incorrect because AFW will have been isolated by the time Path-2 is entered.
C is incorrect because Path-2 will be entered after EPP-014 is already performed.
D is incorrect because Path-2 will be performed after EPP-014. Actions of the first procedure performed will ensure SG isolation

Question Number: 16

Tier 2 Group 1

Importance Rating: RO 3.4
Technical Reference: Path-1, EPP-014
Proposed references to be provided to applicants during examination: None
Learning Objective: LPEOP3-9 Obj 8
10 CFR Part 55 Content: 41.10

Comments:

Instructions	Response Not Obtained

****

CAUTION

- At least one SG must be maintained available for RCS cooldown.
- Any faulted SG OR secondary break should remain isolated during subsequent recovery actions unless needed for RCS cooldown.

****

1. Implement Function Restoration Procedures As Required.

2. Check MSIVs AND Bypass Valves:

a. Verify all MSIVs - SHUT	a. Perform the following: 1) Locally shut instrument air supply to RAB 261: 1IA-814 (north of AH-19 1A-SA) 2) Locally remove cap AND open drain valve: 1IA-1876 (located in corridor outside VCT valve gallery)
b. Verify all MSIV bypass valves - SHUT	b. Locally shut OR isolate valve(s).

3. Check Any SG <u>NOT</u> Faulted:

a. Any SG pressure - STABLE <u>OR</u> INCREASING	a. GO TO EPP-015, "UNCONTROLLED DEPRESSURIZATION OF ALL STEAM GENERATORS", Step 1.

Instructions	Response Not Obtained
4. Identify Any Faulted SG: a. Check for any of the following: o Any SG pressure - DECREASING IN AN UNCONTROLLED MANNER o Any SG - COMPLETELY DEPRESSURIZED	Search for initiating break: o Main steamlines o Main FW lines o AFW lines o Main steam drain lines before MSIVs o Blowdown lines o Hydrazine AND ammonia addition lines GO TO Step 6.

G39A2.03
R016

Instructions	Response Not Obtained
5. Isolate Faulted SG(s):	
o Verify faulted SG(s) PORV - SHUT	o Locally shut block valve(s).
o Verify main FW isolation valves - SHUT	o Verify shut OR isolate feed reg valve(s) AND feed reg bypass valve(s).
o Verify MDAFW <u>AND</u> TDAFW pump isolation valves to faulted SG(s) - SHUT	o Locally shut OR isolate valves.
o Shut faulted SG(s) steam supply valve to TDAFW pump - SHUT SG B: 1MS-70 SG C: 1MS-72	o Locally shut valve(s).
o Verify main steam drain isolation(s) before MSIVs - SHUT: SG A: 1MS-231 SG B: 1MS-266 SG C: 1MS-301	o Locally shut OR isolate valve(s).
o Verify SG blowdown isolation valves - SHUT	o Locally shut outside CNMT isolation valves.
o Verify main steam analyzer isolation valves - SHUT	

039A2.03
12016

Instructions	Response Not Obtained
6. Check CST Level - GREATER THAN 10%	Switch the AFW water supply to the ESW system using OP-137, "AUXILIARY FEEDWATER SYSTEM", Section 8.1.

NOTE: A SG may be suspected to be ruptured if it fails to dry out following isolation of feed flow. Local checks for radiation can be used to confirm primary-to-secondary leakage.

7. Check Secondary Radiation:	
a. Check for all of the following: o SG blowdown radiation - NORMAL o Main steamline radiation - NORMAL	a. GO TO PATH-2, entry point J.
8. Check SG Levels:	
a. Any level - INCREASING IN AN UNCONTROLLED MANNER	a. GO TO Step 9.
b. GO TO PATH-2, entry point J.	
9. Check If SI Has Been Terminated:	
a. SI flow - GREATER THAN 200 GPM	a. Observe CAUTION prior to Step 10 AND GO TO Step 10.
b. GO TO Step 12.	

I. INTRODUCTION

Lesson Objectives TP

A. Lesson objectives

Upon completion of this lesson, the student should be able to

1. DESCRIBE the purpose of the EPP-014 and EPP-015 emergency procedures, including the type of event for which they were designed
2. Given the WOG major categories for an EOP and a list of EOPs, IDENTIFY the associated emergency procedure
3. Given a major category from an emergency procedure, DESCRIBE how the action is accomplished
4. Given actions taken in these emergency procedures, PREDICT the plant response to these actions
5. DESCRIBE the entry and exit conditions for each emergency procedure
6. Given a title of a continuous action step from a foldout, STATE the conditions for implementation
7. Given a step, caution, or note from an emergency procedure, STATE its purpose
8. Given a description of an accident condition and list of emergency procedures, ARRANGE the procedures in the sequence of implementation
9. DISCUSS the following frequent questions related to EPP-014 and EPP-015 emergency procedures
   a. EPP-014 CST level basis
   b. EPP-015 minimum feed flow basis
   c. EPP-015 comparison with EPP-008

B. Reason for study

During an accident, mitigation of the event is dependent upon the ability of operators to effectively implement the emergency procedures. In order to properly utilize these procedures, the operator must be familiar with the procedures, their background and purpose, and their application.

Which ONE (1) of the following actions is allowed prior to the direction being provided in the EOPs?

A. Isolation of AFW flow to a ruptured SG that has been identified and narrow range level is 10%.

B. Reduction of SI flow prior to steps that check for SI Termination, when the event in progress is a spurious or inadvertent safety injection actuation.

C✓ Isolation of AFW flow to a faulted SG with at least one other intact SG available.

D. Isolation of the MSIV for a SG that has been identified as ruptured.

A is incorrect. Level must be 25% prior to isolation.

B is incorrect. Specifically excluded in the EOP User's Guide, but plausible because PZR overfill is a concern for HP Westinghouse plants.

C is correct.

D is incorrect. Path-2 isolation does not allow for pulling forward MSIV closure. AFW can be isolated, but only after minimum SG level is reached. (See A)

Emergency Procedures/Plan: Ability to perform without reference to procedures those actions that require immediate operation of system components and controls.

Question Number: 17

Tier 2 Group 1

Importance Rating: RO 4.0

Technical Reference: EOP User's Guide
Proposed references to be provided to applicants during examination: None
Learning Objective: LPEOP3-19 Obj 4
10 CFR Part 55 Content: 41.10

Comments:

5.1.2 General Usage (continued)

During performance of the initial action of PATH-1, after SI has been actuated, there is little benefit to performing pre-emptive actions prior to reaching the diagnostic steps and transitioning to the appropriate recovery procedure. Performing steps out of sequence early in PATH-1 may actually delay implementation of other actions critical for optimal recovery.

Conditions may arise; however, where it may be advantageous to perform actions that are not specified in the EOPs or to perform actions prior to reaching the associated instructions in the EOPs. The following are examples of actions that experience has shown may be advantageous to perform prior to direction in the EOPs:

(1) If an AFW actuation occurs due to SG level shrink, the operator may throttle the AFW flow control valves and control AFW pumps to maintain intact SG levels between 25% and 50% [40% and 50%].

(2) If a SG is known to be faulted and at least one intact SG is available, AFW flow to faulted SG may be isolated.

(3) If a SG is known to be ruptured, feed flow to that SG may be secured when level in that SG is above the top of the tubes 25% [40%].

An example of an appropriate pre-emptive action is isolating feed flow to a faulted SG prior to transitioning to EOP-EPP-014, when the operator is in the process of implementing PATH-2 due to a ruptured SG. An example of an inappropriate pre-emptive action is reduction or termination of SI prior to the steps that check the SI termination criteria. These actions might be beneficial to prevent filling the PRZ if the only event were a spurious SI. However, premature termination of SI could result in further degradation of the plant, if other undiagnosed events are in progress. (Reference 2.2.2.9)

While implementing EOPs, it may be necessary to implement actions identified in the AOPs. This is acceptable assuming that referencing an AOP does not delay accident mitigation as outlined in the EOPs. Particular attention should be given to actions that will protect major plant equipment and/or enhance plant control.

039 G2.4.49
R017

I. INTRODUCTION

A. Lesson objectives

Lesson Objectives TP

Upon completion of this lesson, the student should be able to

1. DESCRIBE Control Room usage of the EOP network as it relates to the following
   a. Performing steps out of sequence
   b. Implementing AOP actions
   c. EOP applicability
   d. Entry into EOP network
   e. Rediagnosis
   f. Direct entry into EPP-001
   g. EPPs that have priority over FRPs
2. DESCRIBE Control Room usage of status trees as it relates to the following
   a. Priority of status trees
   b. Rules of usage
   c. Monitoring requirements
3. DESCRIBE Control Room usage of EPPs, foldouts, and FRPs as it relates to the following:
   a. Format of action steps
   b. Performing action steps
   c. Completing tasks
   d. Transitions from EOPs and place keeping
   e. Foldouts
4. Given a set of conditions during EOP implementation, DETERMINE the correct response or required action based upon the EOP User's Guide general information
   a. Determining an RCS subcooling value
   b. Criteria for resetting SI, Phase A, Phase B, and FWIS and the expected effect on plant systems
   c. Sequencer operation

039 G2.4.49
2017

d. Checking RCS pressure/temperature stable

e. Realignment of equipment after SI termination

f. The meaning of "verify" verses "check"

g. Use of RCS wide-range pressure indication

h. Dumping steam at maximum rate

i. Control of ruptured SG level

j. Use of the term "NORMAL"

k. Use of PATH guides

l. Use of operating procedures

m. Use of plant instrumentation and the plant computer

n. Use of PRZ spray during an SGTR

o. Use of charging to control RCS Inventory

p. SI reinitiation

q. TDAFW pump speed controller setpoint

r. Tech Spec cooldown and P/T limits

s. Temperature indications to determine RCS CD

t. Using core exit TCs to determine ICC

u. Consulting the Plant Operations Staff

v. Shutdown margin evaluation

w. CSIP alternate miniflow isolation valve operation

x. Safeguards verification during FRP implementation

y. Restoration of RCP cooling and RCP restart

z. Use of "Bank Select" during an ATWS

aa. RCP restart following a SGTR

bb. Loss of SI flow indication

cc. Contingencies for termination of SI flow

dd. Torque switch and overload protection

ee. Conservation of the 250-volt station battery

ff. Potential Gas Intrusion into the CSIP suctions

gg. Transition to Severe Accident Management Guidance

45. 040 G2.2.22 001/NEW//LOWER//RO/HARRIS/7/2007/NO

In Mode 1, which ONE (1) of the following describes (1) the setpoint for closure and (2) the MAXIMUM MSIV closure time allowed by Technical Specifications if a signal is generated?

A. (1) 601 psig rate compensated;
(2) 5 seconds

B. (1) 100 psig/2 seconds for 5 time constants;
(2) 5 seconds

C. (1) 601 psig rate compensated;
(2) 10 seconds

D. (1) 100 psig/2 seconds for 5 time constants;
(2) 10 seconds

A is correct.
B is incorrect because the initiating signal will not be active in Mode 1
C is incorrect because the time for closure is too long.
D is incorrect because the time for closure is too long and the signal is not active in Mode 1.

Lower cognitive level memory of setpoint and limit.
Equipment Control: Knowledge of limiting conditions for operations and safety limits.

Question Number: 49

Tier 1 Group 1

Importance Rating: RO 3.4
Technical Reference: TS section 3.7, MSSS Text
Proposed references to be provided to applicants during examination: None
Learning Objective: MSSS Text Obj 8
10 CFR Part 55 Content: 43.2

Comments:

04OG2.2.20
R049

MAIN STEAM ISOLATION

The main steamline isolation signal is provided to isolate the main steamlines leaving containment on a loss of secondary coolant. This limits RCS cooldown on a steamline break, and limits containment pressure rise if the break occurs inside containment. The steamline isolation signal will ensure that only one SG depressurizes following a steamline break upstream of the Main Steam Isolation Valves (MSIV). The main steamline isolation signal automatically shuts the MSIVs (1MS-80, 1MS-82, 1MS-84), MSIV bypass valves (1MS-81, 1MS-83, 1MS-85), and MSIV before seat drain valves (1MS-231, 1MS-266, 1MS-301). The main steamline isolation signal is actuated by any of the following (see Figure 2):

- Steamline low pressure (same as SI actuation). Two of three steamline pressure instruments on any SG pressures lower than 601 psig (rate sensitive). This signal can be manually blocked below P-11 (2 of 3 PRZ pressures <2000 psig). The signal is automatically reinstated when RCS pressure is raised above P-11.

- High steamline pressure negative rate. Two of three steamline pressure instruments on any SG decrease greater than 100 psi (can be a step change or 2 psi/sec for five time constants). This actuation is only enabled when the low steamline pressure SI signal is blocked. This signal is automatically disabled when RCS pressure is raised above P-11.

DISTRACTOR

- Containment HI-2 pressure. Two of three containment pressures instruments rise to 3.0 psig (from channels II, III, and IV only). There are no blocks associated with this signal.

- Manual actuation. One of two MSLI manual actuation switches taken to actuate.

Separate train A and train B reset switches are provided on the MCB. Main steam isolation is also addressed in Main Steam Supply System student text.

The steamline isolation signal also enables auxiliary feedwater isolation (discussed later in this text).

MAIN FEEDWATER ISOLATION

The main feedwater isolation signal is provided to isolate the main feedwater flowpath to the steam generators. The isolation of main feedwater is required to mitigate the effects of several events. The MFIS aids in limiting RCS cooldown on a steam line break. It will also limit the containment pressure rise for secondary breaks within the containment. The FWIS can help prevent SG overfill, which can cause RCS overcooling or potential damage to steamline valves and the main turbine. SG overfill is a concern when responding to a

0406.2.22
R049

INTERLOCKS

Figure 8: MSIS Logic

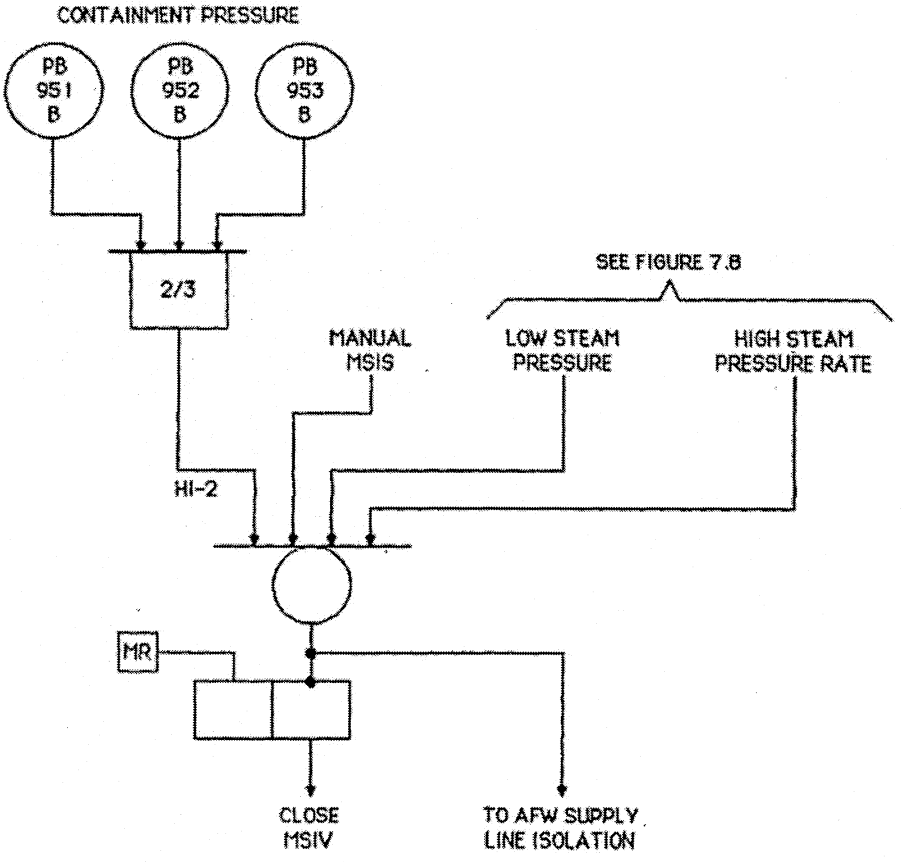

The Main Steam Isolation (MSI) signal automatically shuts the MSIVs, the MSIV bypass valves and the Main Steam line drain isolations upstream of the MSIVs (1MS-231, 266 and 301). As illustrated in Figure 9 the ESFAS signals that generate a MSI signal are:

- Manual MSI from 1 of 2 MCB switches
- High-2 containment pressure greater than (2 of 3 greater than 3.0 psig)
- Low steam line pressure (2 of 3 less than 601 psig)
- High negative steam pressure rate (2 of 3 steam pressure decrease of 100 psi with a 50 second time constant) when pressurizer pressure below P-11 and low steam line pressure SI blocked

040 62.2.22
R049

CHAPTER 1

System Overview

Overview

The Main Steam System (MSS) delivers steam produced in the three steam generators to the Main Turbine (motive force to drive the Turbine Generator). The MSS also supplies steam to the Moisture Separator Reheaters (MSRs), the Turbine Driven Auxiliary Feedwater Pump turbine, the turbine gland seals, and the Auxiliary Steam system. The MSS is designed to perform the following functions:

- Deliver steam from the secondary side of the steam generators to the turbine throttle valves at the required steam conditions.
- Dissipate heat generated by the Nuclear Steam Supply System (NSSS) when the turbine generator is not in service by use of the steam dump system.
- Provide steam for turbine gland seals, reheaters, and other plant auxiliary components.
- Dissipate heat to atmosphere when the main condenser is not available or is not sufficient to remove the entire heat load, through the main steam safety valves, the SG power operated relief valves (PORVs), or the atmospheric steam dump valves.
- Isolate the steam generators from the remainder of the Main Steam System automatically or by operator action (including Containment Isolation) within five seconds of a Main Steam Isolation (MSI) signal.
- Provide adequate overpressure protection for the steam generators and Main Steam System.
- Allow turbine load changes in excess of rod control capabilities without a trip.

Refer to Figure 1 for a simplified flow diagram of the Main Steam and Steam Dump Systems.

640 G2.2.22
R049

7. DESCRIBE how the Main Steam Supply System is used in the response to, and mitigation of, events as described in the applicable AOPs and EOPs, including: **AO**
   a. Local operation of PORVs on a loss of AC power
   b. Local operation of MSIVs

8. STATE the Limiting Condition of Operation (not including the Actions) for the following Technical Specifications as they relate the MSSS.
   a. 3.7.1.1, Plant Systems—Turbine Cycle Safety Valves
   b. 3.7.1.5, Plant Systems—Main Steam-line Isolation Valves
   c. 3.6.3, Containment Isolation Valves
   d. 3.3.3.5.b, Remote Shutdown System

9. Given a copy of the appropriate section of the Technical Specifications, properly APPLY the preceding Technical Specifications and their bases (SRO only) to a given plant condition.

Given the following:

- A loss of Main Feedwater has occurred.
- The reactor has tripped.
- At the time of the trip, the following indications existed:
  - All SG NR levels indicated 25% and lowering slowly.
  - PZR pressure indicated 2370 psig and rising slowly.

Current conditions are:

- All SG NR levels indicate 50%.
- PZR pressure indicates 2260 psig.

Which ONE (1) of the following describes the MCB ALB First Out indication available, and the indication available when the alarm panel is reset by the RO?

A. ✓ SG LO-LO Level is flashing RED; the First Out alarm will clear after the ALB is acknowledged and reset.

B. SG LO-LO Level is flashing RED; the First Out alarm will stop flashing and remain solid after the ALB is acknowledged and reset.

C. PZR PRESSURE is flashing RED; the First Out alarm will clear after the ALB is acknowledged and reset.

D. PZR PRESSURE is flashing RED; the First Out alarm will stop flashing and remain solid after the ALB is acknowledged and reset.

A is correct.SG LO-LO level setpoint is reached. PZR pressure is 15 psig away from a trip. If the alarm has gone past its reset setpoint (SG LO-LO levels at 50% is above reset) then the alarm panel will clear when reset

B is incorrect but would be correct if the alarm had not gone past its reset setpoint

C and D are incorrect because the PZR pressure trip was not the first out. Plausible because C describes the correct condition upon reset. D describes a condition if the alarm was not above reset value

Question Number: 50

Tier 1 Group 1

Importance Rating: RO 3.4

Technical Reference: MCB Text
Proposed references to be provided to applicants during examination: None
Learning Objective: MCB Text Obj 4, LP PP 2.0 Obj RO 3
10 CFR Part 55 Content: 41.5

Comments:

054AA2.07

Figure 11: RCP Bus Underfrequency Trip

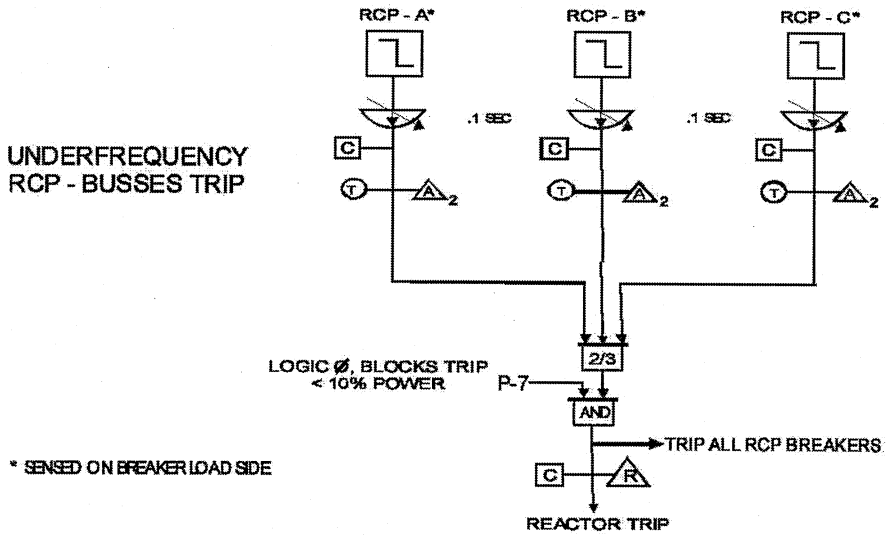

PRESSURIZER HIGH PRESSURE TRIP

This circuit trips the reactor if two of the three PRZ pressure signals exceed the trip setpoint (2385 psig). The purpose of this trip is to limit the pressure range of reactor operations and to help protect against Reactor Coolant System overpressurization. Instruments PS-455A, PS-456A, and PS-457A supply the high pressure signals.

Figure 12: Pressurizer High Pressure And Level Trip

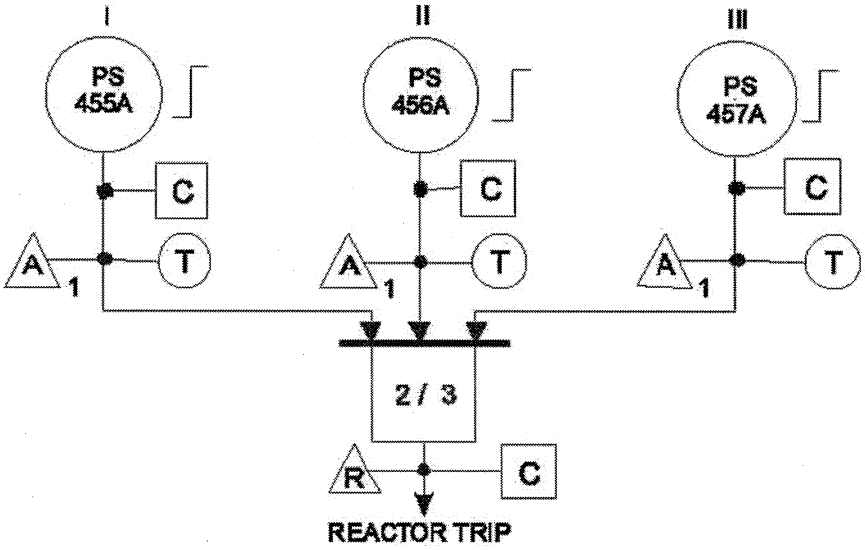

054AA2.07
RO 50

Figure 14: Pressurizer High Water Level Trip

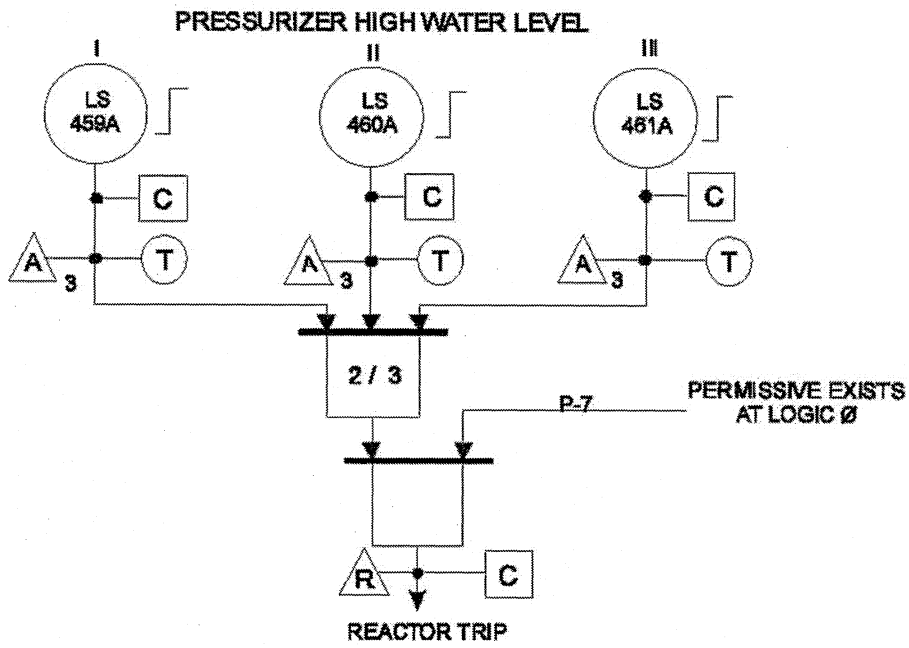

STEAM GENERATOR LOW-LOW WATER LEVEL TRIP

The purpose of this trip is to protect the reactor by preventing operation without adequate heat removal capability. A loss of SG heat sink will lead to an RCS overtemperature and overpressure excursioin, and could eventually lead to a loss of core cooling capability. This circuit trips the reactor if two out of three level indicators of any one SG indicate below the low-low trip setpoint of 25% NR SG level. The motor-driven auxiliary feed pumps are automatically started if the trip condition occurs. If this trip is actuated on two out of three SG, the Turbine Driven Auxiliary Feedwater Pump will start.

- Steam Generator A is protected by LS-474A, LS-475A, and LS-476A.
- Steam Generator B is protected by LS-484A, LS-485A, and LS-486A.
- Steam Generator C is protected by LS-494A, LS-495A, and LS-496A.

054AA2.07
R0 S0

Figure 15: Steam Generator Low-Low Water Level Trip

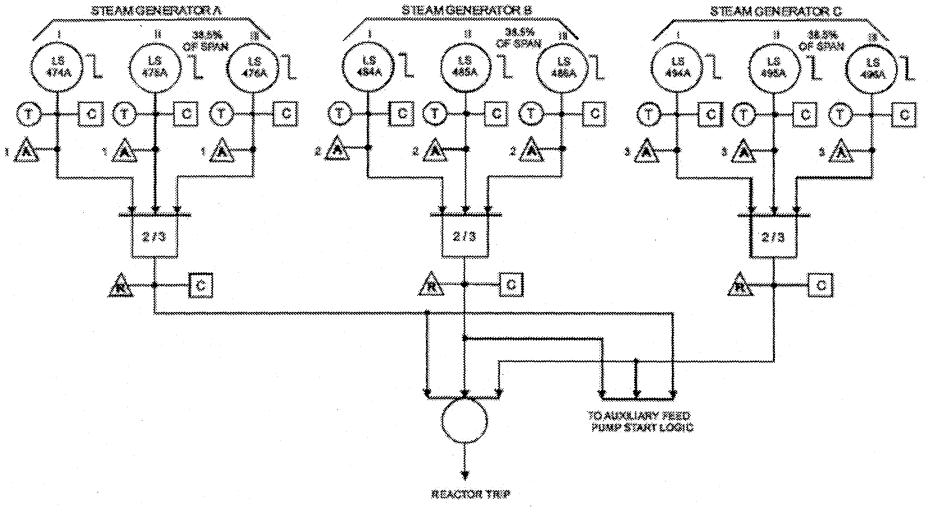

LOW SG LEVEL WITH A SF/FF MISMATCH TRIP

This trip is not used in the transient and accident analyses but is included to enhance the overall reliability of the reactor trip system. It is redundant to the SG low-low level trip. The trip is actuated when the steam flow from one SG exceeds the feedwater flow to the same SG by 40% of rated steam flow coincident with a low level (25% NR) in the same SG level. For each SG, there are two SG level circuits and two SF/FF mismatch circuits. One of two of the circuits at the setpoint in any SG will generate a reactor trip.

054AA2.07
R050

1. Change fast flash to solid if condition is still true
2. Change fast flash to slow flash if condition has cleared (chime activates)
3. Silences alarm horn for respective section of MCB

Reset – This will change slow flash to off and also silences chime for respective section of MCB

Test – This simulates an alarm for the associated ALBs.

There are three audible signals:

- Horn—alarm active (the sections of the MCB and AEP-1 have distinct sounding horns to assist in determining which annunciator has alarmed)
- Chime—condition restored
- Siren—first out panel alarms

CTMP ALB

The Cooling Tower Makeup Panel (CTMP) houses its own ALB, with its own Silence, Acknowledge, Reset and Test pushbuttons. The CTMP alarms sound a different horn than other MCB annunciators. The CTMP ALB alarms function is similar to the ACP alarms. There is no reset chime or slow flash feature. The operator must depress the Reset pushbutton to turns off any cleared annunciator.

First Out ALBs

Three ALBs, two for reactor trip, one for turbine trip, are provided to function as First Out ALBs. The first alarm received on these ALBs will be red to identify the cause of the trip (i.e., one red for the reactor trip and another red for the turbine trip). Subsequent alarms will be white. These ALBs can only be tested/reset by the associated switches on the vertical panel.

Select important alarms have reflash capability. This feature automatically resets and re-alarms a previously acknowledged alarm should a new condition develop that feeds the alarm.

Power Supplies

ALBs are powered by one of two systems:

- System 1 powers ALBs 1 through 12
- System 2 powers ALBs 13 through 30

3. DEFINE the terms: May, Must, Shall, and Should as they pertain to procedure usage as described in PRO-NGGC-0201.

4. RECOGNIZE the lessons learned from industry events as related to AOs

   a. SOER 85-2

   b. NRC IN 92-30

B. RO Lesson Objectives

1. LIST the on-shift operations staffing requirements as outlined in OMM-001 during any given mode of plant operation

2. IDENTIFY the responsibilities of the Reactor Operator as listed in OMM-001.

3. DISCUSS the procedural requirements concerning the following:

   a. Who can perform manipulations of reactor plant controls

   b. Control room "at the controls area"

   c. Control room indications

   d. Control room references

   e. Maintenance during peak load periods

   f. Changes to control setpoints

   g. Control room conduct

   h. Shift evolutions/briefings

   i. Operation of site alarms from the MCB

   j. Control room status board

   k. MCB annunciators

   l. Administrative control of shutdown banks

   m. Refilling systems

   n. Administrative hold of a procedure

   o. Procedure checklists

   p. Procedure review

4. DESCRIBE the RO responsibilities in OPS-NGGC-1306 concerning Reactivity Management

054 AA2.07
RO SO

Student Objectives

1. STATE the purpose and design function of the following control boards, panels and cabinets:
   a. Main Control Board (MCB)
   b. Auxiliary Equipment Panels (AEP-1 & AEP-2)
   c. Auxiliary Control Panel (ACP)
   d. Main Transfer Panels
   e. Auxiliary Transfer Panels
   f. Main Termination Cabinets (MTCs)
   g. Auxiliary Relay Panels (ARPs)

2. DESCRIBE the normal operation, including operation sequence and normal parameters, and expected system response for receipt and clearing of annunciators at the following panels:
   a. MCB
   b. AEP-1
   c. AEP-2
   d. ACP
   e. CTMU Panel
   f. Main Transfer Panel (LEDs)

3. DESCRIBE the operations in accordance with plant operating procedures required to transfer control from the MCB to the ACP and from the ACP to the MCB.

4. IDENTIFY associated instrumentation, indications, alarms, and controls for the MCB, including the function/operation of the reactor and turbine first out annunciators.

5. Given a set of plant conditions, PREDICT the response of the MCB and ACP and the effect on overall plant conditions with regard to automatic control functions, and major component failures/malfunctions.

Given the following:

- The plant is operating at 100% power.
- EDG 1B-SB is out of service and is expected to return to service in two (2) hours.
- Subsequently, the following events occur:
  - A loss of offsite power.
  - The reactor is tripped and the crew enters PATH-1.
  - The crew made a transition to FRP-H.1, Loss Of Secondary Heat Sink based on a CSFST RED Path.
  - EDG 1A-SA output breaker trips on a bus fault.

Which ONE (1) of the following describes the actions that will be taken based on the current plant conditions?

A. Immediately transition to EPP-001, Loss Of All AC Power to 1A-SA and 1B-SB Buses. Monitor CSF Status Trees for information only until EPP-001 allows use of FRPs.

B. Remain in FRP-H.1 until directed to return to procedure in effect, and then transition to EPP-001. Once equipment is placed in Pull to Lock in EPP-001, CSF Status Trees are monitored for information only until EPP-001 allows use of FRPs.

C. Immediately transition to EPP-001, Loss Of All AC Power to 1A-SA and 1B-SB Buses. Monitor CSF Status Trees for information only until EPP-002 or EPP-003 allows use of FRPs.

D. Remain in FRP-H.1 until directed to return to procedure in effect, and then transition to EPP-001. Once equipment is placed in Pull to Lock in EPP-001, CSF Status Trees are monitored for information only until EPP-002 or EPP-003 allows use of FRPs.

A Incorrect. CSF STs are monitored until after transition to a recovery procedure is made. FRP implementation is not allowed during the performance of EPP-1
C Correct.
B Incorrect. Transition to EPP-1 immediately, even if a RED condition exists. FRP implementation is performed in subsequent recovery procedure
D Incorrect. Go directly to EPP-1, do not stay in FRP-H.1. Recovery actions are correct for FRP implementation

Question Number: 77

Tier 1 Group 1

Importance Rating: SRO 4.0

Technical Reference: EOP User's Guide, EPP-1
Proposed references to be provided to applicants during examination: None
Learning Objective: LP EOP3-7, OBJ 4
10 CFR Part 55 Content: 43(b).5

Comments:

10CFR55.43(b).5 because the SRO must assess plant conditions and select the appropriate course of action by determining the appropriate procedure usage and transitions

5.1.3 EOP Applicability

In general, the EOP Network is applicable for events initiated when the Reactor Coolant System is greater than 350°F. Certain individual procedures within the EOP Network are applicable for events initiated less than 350°F, but above 200°F. With initial conditions below 350°F, significant operator judgment is required when using the EOP Network to mitigate an event. Some steps will not be required and others will have to be modified to allow for existing conditions (i.e., on RHR). This situation is acceptable because a very small fraction of plant life is spent greater than 200°F but less than 350°F. Attachment 1 is a listing of the applicability of each EOP and the plant conditions assumed when entering the EOPs. The appropriate procedure for a LOCA that occurs while on RHR is AOP-020, "LOSS OF RCS INVENTORY OR RESIDUAL HEAT REMOVAL SYSTEM WHILE SHUTDOWN" since it contains all actions necessary to mitigate this type of event. The EOPs should not be used in this case except as directed by AOP-020.

5.1.4 Entry into EOP Network

Entry into the Emergency Operating Procedures is expected when any of the following conditions occurs:

- If at any time a reactor trip or safety injection occurs or is required, the operator will enter PATH-1. This includes spurious or inadvertent SIs. The actions to diagnose and terminate a spurious SI are performed in PATH-1.

- If at any time a complete loss of power on the AC Emergency Buses takes place, the operator will enter EPP-001, "LOSS OF AC POWER TO 1A-SA AND 1B-SB BUSES." This includes any time during the performance of <u>any</u> other EOP.

- EPP-005, "NATURAL CIRCULATION COOLDOWN", may be entered whenever a natural circulation cooldown is required (and an accident is not in progress).

The entry into PATH-1 is expected to be the one more frequently used, so it is described first.

The operator enters at the top left of PATH-1 at the block which says "REACTOR TRIP OR SAFETY INJECTION". After performing the immediate actions, the operator is directed to monitor the CSFSTs to help recognize any potential degradation of plant status. The operator then proceeds through PATH-1 with two possible outcomes:

- He remains in PATH-1 and is directed by an action step to begin implementing the FRPs as required, or

- He transfers to some other EOP at which point he begins to implement the FRPs as required.

5.1.5 Rediagnosis

Should the operator determine or suspect he is in an incorrect PATH or EPP due to misdiagnosis of symptoms or the occurrence of additional failures, he may rediagnose the event. Rediagnosis is accomplished using EOP-REDIAGNOSIS. The REDIAGNOSIS procedure may be entered if SI is in service or required to be in service. The procedure checks the primary symptoms of the major accident categories - secondary break, SG tube rupture and LOCA. Based on the observed symptoms, REDIAGNOSIS stipulates which procedure or set of procedures should be in progress. If REDIAGNOSIS confirms that a procedure different from one in effect should be in progress, the operator may terminate the procedure and transition to that recommended by REDIAGNOSIS. When a series of procedures is cited by REDIAGNOSIS, such as the SGTR series, the the operator should transition to the highest level procedure. For example, if a SGTR is diagnosed and the operator has not implemented any of the SGTR procedures, transition should be made to PATH-2. Transition to any of the other SGTR procedures will be directed from PATH-2. Use of EOP-REDIAGNOSIS and implementation of any procedure based on use of EOP-REDIAGNOSIS is completely discretionary. (Reference 2.3.3.34.)

5.1.6 Direct Entry into EPP-001

Direct entry into EPP-001, "LOSS OF AC POWER TO 1A-SA AND 1B-SB BUSES", is expected to be a rare occurrence. However, once in EPP-001, special considerations come into effect. Because none of the electrically powered safeguards equipment used to restore Critical Safety Functions is operable, none of the FRP's can be implemented. A CAUTION at the beginning of EPP-001 states that:

> "CSF Status Trees should be monitored for information only. Function Restoration Procedures should NOT be implemented unless directed by this procedure."

Once in EPP-001, the operator is directed to restore power to the emergency buses through manipulations at the MCB. If power can be restored to one emergency bus in this manner, the operator is directed to return to the procedure and step that were in effect prior to entry into EPP-001. Since power is available to safeguards equipment and no actions have been taken to lockout safeguards equipment, the operator is also directed to implement FRPs as required.

If power can not be restored at the MCB, the operator performs the required actions to minimize degradation of the plant. This includes defeating the Emergency Safeguards sequencer so emergency loads can be manually loaded once power is restored. The operator is not allowed to transition to any other procedure until power is restored to one of the AC emergency buses. Even then, permission is not granted to implement FRPs until some initial status checks and actions are performed by the operator.

Due to problems with its inverter, Instrument Bus SI must be placed on its alternate supply.

Which ONE (1) of the following requirements must be met prior to placing Instrument Bus 1 on its alternate supply?

A. The unit must be in Mode 5.

B. ✓ The bus must be deenergized.

C. Both trains of SSPS must be in TEST

D. MCB BLOCK switches for Low PZR Pressure SI and Low Main Steam Line Pressure SI must be taken to BLOCK prior to the swap.

B is correct. OP-156.02 states that the bus must be deenergized. A Kirk key is used to energize from the alternate supply
A is incorrect. Mode 5 requirements are for 2 channels of SSPS being out.
C is incorrect. Only the train that is affected will be in TEST
D is incorrect. There are conditions where spurious actuation may occur, but switches not required to be in BLOCK for this condition

Ability to operate and/or monitor the following as they apply to the Loss of Vital AC Instrument Bus: Manual inverter swapping

Question Number: 51

Tier 1 Group 1

Importance Rating: RO 3.7

Technical Reference: OP-156.02
Proposed references to be provided to applicants during examination: None
Learning Objective: 120 V UPS Text Obj 8
10 CFR Part 55 Content: 41.7

Comments:

057AA1.01

R051

8.7. Aligning (UPS) Instrument Bus to Alternate Power Supply

8.7.1. Initial Condition

1. A need exists to align 7.5 KVA UPS Instrument Bus to Alternate Power Supply. _____

2. Alternate Power Supply is available for the respective Instrument Distribution Panels. _____

8.7.2. Procedural Steps

1. **EVALUATE** bistable status prior to de-energizing an instrument bus to determine if a trip or actuation signal will be generated by this procedure. _____

CAUTION

The instrument bus to be transferred to its alternate power supply must first be de-energized. A thorough network analysis of plant impact should be performed before de-energization.

2. **REFER** to AOP-024, Attachment 2 through 5 for a list of equipment affected when the associated instrument bus is de-energized and subsequently energized. Attachment 10 of this procedure also gives some information. _____

R **CAUTION**

Before an Instrument Bus Train (both SI and SIII or both SII and SIV) is de-energized, both trains of Solid State Logic Output Mode Selector Switch should have been placed in TEST per OP-103 to prevent an inadvertent safeguard actuation. This requires the plant to be in MODE 5 or defueled.

3. **VERIFY** Manager - Operations has approved de-energizing the instrument bus(es). Reference P&L 4.0.19. _____

DISTRACTOR

4. **VERIFY** SG LVL ATWS PANEL BYPASS Switch is in BYPASS. _____

5. **IF** an Instrument Bus Train will be de-energized,
THEN VERIFY that both trains of SSPS are in TEST per OP-103. (Reference 2.6.1) _____

8.7.2 Procedural Steps (continued)

6. At designated Instrument Distribution panel, **OPEN** the appropriate Instrument Channel UPS Breaker(s):

Panel	Cubicle	
IDP-1A-SI	INSTR CHAN I UPS	_____
IDP-1B-SII	INSTR CHAN II UPS	_____
IDP-1A-SIII	INSTR CHAN III UPS	_____
IDP-1B-SIV	INSTR CHAN IV UPS	_____

7. At Inst Channel UPS Breaker Cubicle, **ROTATE AND REMOVE** the Kirk Key. _____

NOTE: The PIC Primary Power Supply is the Upper Power Supply and the PIC Secondary Power Supply is the Lower Power Supply in the Center Bay of each PIC.

NOTE: If any of the PIC power supplies have two breakers and must be switched OFF, the DC OUTPUT breaker is operated first and then the AC INPUT breaker operated.

8. **PLACE** the Primary and Secondary Power Supplies in OFF in the Center Bays of the appropriate PICs.

Instrument Bus	Process Instrument Cabinet		
IDP-1A-SI	1 ____		
IDP-1B-SII	2 ____	10 ____	
IDP-1A-SIII	3 ____	9 ____	13 ____
IDP-1B-SIV	4 ____	14 ____	

NOTE: The Secondary Power Supply should **NOT** be de-energized for PIC 17 and PIC 18 in the following Step. These PICs have Secondary Power Supplies from the Appendix R Inverters and should continue to function.

9. At the appropriate PIC, **VERIFY** the Primary Power Supply (Upper Power Supply) Off:

Instrument	Process Instrument Cabinet	
IDP-1A-SI	PIC Cab 17	_____
IDP-1B-SII	PIC Cab 18	_____

10. At designated Instrument Distribution Panel, **INSERT AND ROTATE** Kirk Key in Alternate Power Supply Breaker (Power Panel Supply). _____

11. **PLACE** the appropriate Alternate Power Supply Breaker in the ON position.

- IDP-SI, Alternate Supply From PP-1A211-SA _____
- IDP-SII, Alternate Supply From PP-1B211-SB _____
- IDP-SIII, Alternate Supply From PP-1A311-SA _____
- IDP-SIV, Alternate Supply From PP-1B311-SB _____

NOTE: The PIC Primary Supply is the Upper Power Supply and the PIC Secondary Power Supply is the Lower Power Supply in the center bay of each PIC.

NOTE: If any of the PIC power supplies have two breakers and must be switched ON, the AC INPUT breaker is operated first and then the DC OUTPUT breaker operated.

12. **PLACE** the Primary and Secondary Power Supplies in ON in the center bays of the appropriate PICs.

Instrument Bus	Process Instrument Cabinet		
IDP-1A-SI	1 ____		
IDP-1B-SII	2 ____	10 ____	
IDP-1A-SIII	3 ____	9 ____	13 ____
IDP-1B-SIV	4 ____	14 ____	

NOTE: The Secondary Power Supply is energized for PIC 17 and PIC 18. These PICs have Secondary Power Supplies from the Appendix R Inverters and should be functioning.

13. At the appropriate PIC, **PLACE** the Primary Power Supply (Upper Power Supply) in ON.

Instrument	Process Instrument Cabinet	
IDP-1A-SI	PIC Cab 17	_____
IDP-1B-SII	PIC Cab 18	_____

NOTE: If any Power Supply LED is **NOT** lit, a Work Order should be initiated for Maintenance to investigate.

14. At the appropriate PIC, **CHECK** cards to ensure Power Supply LEDs (top LED on each card) are lit.

Instrument Bus	Process Instrument Cabinet		
IDP-1A-SI	1 ____	17 ____	
IDP-1B-SII	2 ____	10 ____	18 ____
IDP-1A-SIII	3 ____	9 ____	13 ____
IDP-1B-SIV	4 ____	14 ____	

NOTE: If any SC (short circuit) Trip LED is lit, a Work Order should be initiated for Maintenance to remove and re-insert the associated cards.

15. At the appropriate PIC Bays 1 and 3, **CHECK** the NAL cards to ensure SC Trip LEDs are **NOT** lit.

Instrument Bus	Process Instrument Cabinet		
IDP-1A-SI	1 ____	17 ____	
IDP-1B-SII	2 ____	10 ____	18 ____
IDP-1A-SIII	3 ____	9 ____	13 ____
IDP-1B-SIV	4 ____	14 ____	

16. For each Instrument Bus that was energized in this section, **VERIFY** the associated SSPS and ESFAS power supply remained energized as indicated by the respective Input Channel POWER light (both trains) and the 15 VDC and 48 VDC power supply lights (on respective train Logic Cabinet) being lit.

Instrument Bus	Power Supply	
IDP-1A-SI	Bus No. 1 Power trains A and B	_____
	15 and 48V Power Supply #1 Train A	_____
IDP-1B-SII	Bus No. 2 Power trains A and B	_____
	15 and 48V Power Supply #1 Train B	_____
IDP-1A-SIII	Bus No. 3 Power trains A and B	_____
	15 and 48V Power Supply #2 Train A	_____
IDP-1B-SIV	Bus No. 4 Power trains A and B	_____
	15 and 48V Power Supply #2 Train B	_____

DISTRIBUTOR

R **CAUTION**

After the Instrument Bus has been energized, the affected Train's MCB Block Switches for Low Pressurizer Pressure and Main Steam Line Pressure must be taken to BLOCK before placing the Solid State Logic Output Switch to OPERATE. This is accomplished in OP-103. (Reference 2.6.1)

17. **IF** SSPS was required to be verified in test in Step 8.7.2.5 (an entire Train of Instrument Busses is affected),
AND IF desired,
THEN RESTORE both trains of SSPS from TEST per OP-103. (Reference 2.6.1) _____

18. **IF** conditions allow,
THEN PLACE SG LVL ATWS PANEL BYPASS Switch in NORMAL. _____

19. **VERIFY** all ERFIS MUX power is available using ERFIS 'MUX PWR'. _____

20. **PERFORM** applicable portions of Attachment 4 & 5, normal AC Electrical Lineup Checklist for Emergency Bus 1A-SA & 1B-SB. _____

057 AA 1.01
R051

Student Objectives

1. STATE the purpose and design function of the 120-VAC Electrical Distribution (120V) and Uninterruptible Power Supply (UPS). **AO**

2. STATE the function, design bases, and power supplies of the following 120V UPS major components **AO**
   a. Inverters
   b. 45 kVA Transformers
   c. 7.5 kVA Transformers
   d. Safety Related Instrument Buses

3. DISCUSS potential modes of 120V UPS component failures and relevant industry Operating Experience (OE).

4. DESCRIBE the 120V UPS normal operation, including operation sequence and normal parameters, and expected system response.

5. DESCRIBE the modes of operations and major flowpaths of the 120V UPS in accordance with plant operating procedures, including the following: **AO**
   e. Normal UPS power supply
   f. Backup UPS power supply
   g. Alternate UPS power supply
   h. DRPI Normal and Alternate Power Supply

6. STATE the major precautions, limitations, and safety considerations associated with the 120V UPS and describe their bases.

7. IDENTIFY associated remote and local instrumentation, indications, alarms, and controls for the 120V UPS.

8. STATE the interlocks, permissives, and automatic control functions of the 120V UPS, and the basis for each. **AO**

During a station blackout, which ONE (1) of the following describes the design capacity of the 125 VDC vital batteries before they reach their minimum voltage?

A. 3 hour design; 1170 amp-hours.

B. 3 hour design; 700 amp-hours.

C. 4 hour design; 1170 amp-hours.

D. 4 hour design; 700 amp-hours.

C is correct. Safety related 125 VDC busses are good for 4 hours and 1170 amp-hours.
B is incorrect. This is design for non-safety battery; 700 amp-hours are for the 250 VDC batteries and 3 hours also
A is incorrect. Amp-hour rating is correct but 3 hours is for non-safety class battery
D is incorrect. Amp-hour rating is incorrect for safety related battery
Ability to determine and interpret the following as they apply to the Loss of DC Power: 125V DC bus voltage, low/critical low, alarm

Question Number: 52

Tier 1 Group 1

Importance Rating: RO 3.3
Technical Reference: DC text
Proposed references to be provided to applicants during examination: None
Learning Objective: DCP Text Obj 9
10 CFR Part 55 Content: 41.5

Comments:

058AA2.02
R052

CHAPTER 1

System Overview

The DC power system provides a reliable source continuous DC power system for the plant protection system, control, instrumentation, ERFIS computer, security UPS and other loads during start up, shutdown, and normal operating modes of the plant. They are sized to accommodate the power needs following a loss of AC power to allow the plant to be shutdown and controlled until AC power can be restored.

The DC power system has seven 125-volt battery banks and one 250-volt battery bank, each with its own battery chargers and DC load center. There are two 125 volt safety-related batteries, one 125 volt non-safety related battery and one 250 volt battery that provide power to the power block systems. The switchyard has two dedicated 125 volt batteries and the ERFIS computer system and the security electrical system each have one. The two safety-related 125 volt battery systems are part of the class 1E electrical distribution system.

The batteries have battery chargers powered from the 480 V MCCs. The three 125 volt and one 250 volt station batteries have two battery chargers each. The switchyard and security batteries have a single battery charger. The ERFIS battery charger is integrated into the ERFIS UPS.

During normal operation, the battery chargers maintain the charge on the battery bank and also carry the load on the associated DC bus or power panel. The chargers have the ability to boost the voltage applied to the battery banks to equalize the voltage carried by each of the cells of the battery. This mode of charger operation is used periodically to maintain battery capacity.

All of the plant batteries are lead acid types and are connected via fuses and breakers to their associated DC bus or power panel.

The design capacities of the batteries following a loss of AC power are:

- The two 125 volt safety-related and one non-safety related batteries - 4 hours.
- The 250-volt non-safety related battery - 3 hours.
- The ERFIS UPS battery – 1 hour.
- The security UPS battery - 4 hours.
- Switchyard 125 volt batteries – 8 hours.

All of the safety related DC power system equipment is seismically and environmentally qualified and meets the separation requirements described in Section 3.10 and 3.11 of the FSAR.

058AA202
R052

GROUND FAULT PROTECTION

Ground detection annunciation of single-polarity grounds are provided in the control room is provided for the safety related 125 volt and non-safety related 125 volt and 250 volt subsystems. Ground detection for the security 125 volt subsystem alarms through the security computer. A switchyard trouble alarm provides indication of a problem there.

Since the DC systems are ungrounded, the system will continue to operate with a grounded condition. However this can create conditions that could cause spurious actuations and prevent operation of components and controls. Ground location and isolation should be aggressively pursued to prevent these problems.

BATTERY ROOM EXHAUST VENTILATION

The battery rooms have exhaust ventilation. This ventilation provides a means to minimize the Hydrogen concentration in the room. This is particularly important when operating the battery chargers in equalize mode and during battery discharge conditions.

DC Power Subsystem Specific Details

Additional details about the DC power subsystem components supplement the generic information presented about the DC power components above.

SAFETY-RELATED 125 VOLT DC

The safety-related 125 volt DC subsystem has two divisions, each with a battery bank, 1A-SA and 1B-SB, and two battery chargers. As part of the station class 1E distribution, these are physically and electrically segregated to provide a single-failure proof delivery of 125 volt power to the safety-related 7.5 KVA UPSs, safety-related circuit breaker control power, reactor protection system and the DC power system emergency loads such as the DG and AFW controls and RCP trip coils. The checklists in OP-156.02 provide a complete listing of the loads. It also provides control power to non-class 1E MCCs that power the pressurizer heaters. This connection between class 1E and non-class 1E distribution is protected by both a breaker and fusing to prevent jeopardizing the class 1E 125 volt subsystem.

IMPORTANT

The loss of DC power will require that all major AC loads be operated locally at their breaker.

Each of the battery banks is sized to provide DC power system for four hours following a plant trip and loss of AC power prior to reaching the minimum cell voltage of 1.75 volts. The banks each have 60 cells rated at

058 AA2.02
R052

1170 amp-hours capacity. The batteries are located in separate battery rooms in the switchgear area of the 286-foot elevation of the RAB.

There are two battery chargers provided for each battery. Chargers 1A-SA and 1B-SA supply the 1A-SA battery and chargers 1A-SB and 1B-SB supply the 1B-SB battery. There is normally one charger in service at a time and there is no provision for them to share load. Each charger has a capacity of 150 amps and provides a 133.5 volt float voltage and 138.6 volt equalize voltage. They are each capable of restoring full charge to the battery within 24 hours of fully discharging it while also supplying the loads on the DC bus.

125 VDC Safety Power Supplies	
Charger 1A-SA	480-V MCC 1A21-SA
Charger 1B-SA	480-V MCC 1A31-SA
Charger 1A-SB	480-V MCC 1B21-SB
Charger 1B-SB	480-V MCC 1B31-SB

Each battery is directly connected to its associated Division I bus; DP-1A-SA and Division II bus DP-1B-SB. These buses supply power to the Division I DC load centers, DP-1A1-SA in the DG building and DP-1A2-SA on the 286-foot elevation of the RAB and the Division II load centers DP-1B1-SB in the DG building and DP-1B2-SAB on the 286-foot elevation of the RAB.

058AA2.02
2052

transfer switch that can select power from either 480 V MCC 1-4A4 or 1-4B4. The switchyard 125V battery charger AC power supplies are:

- Primary: 480V PP-1-4AB42 circuit 1
- Backup: 480-V PP-1-4AB42 circuit 2

PLANT COMPUTER (ERFIS) 125 VOLT DC

Figure 4: ERFIS Uninterruptible AC Power Supply

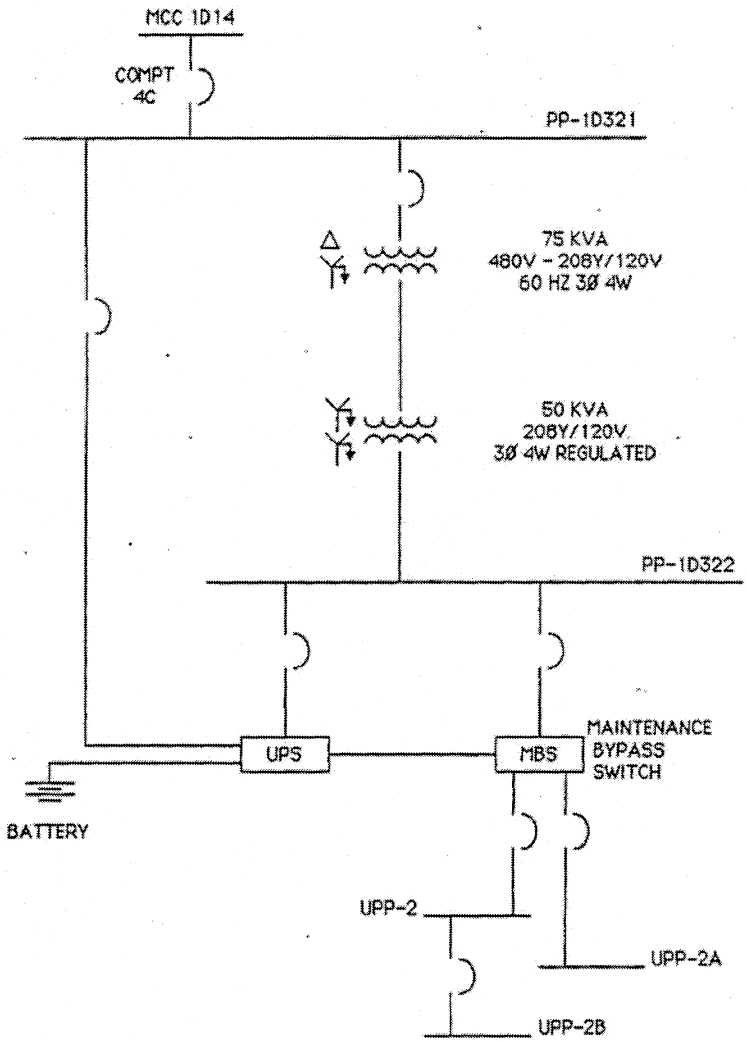

The ERFIS 125 volt subsystem is a single battery bank with one battery charger that is integral to the ERFIS UPS. It provides the backup DC power system source to the 45 KVA ERFIS UPS. The ERFIS 125 volt subsystem

058AA2.02
R052

components are located in the machinery room across from Operations building on roof of the RAB.

The battery bank is sized to provide DC power system for one hour following a plant trip and loss of AC power. The bank has 60 cells rated at 700 amp-hours capacity.

The battery is connected to the UPS via a breaker unlike the other hard-wired batteries used in the plant.

The battery charger section of the UPS has a capacity of 520 amps and is powered from 1D14.

SECURITY 125 VOLT DC

Figure 5: Security Building 75 KVA UPS

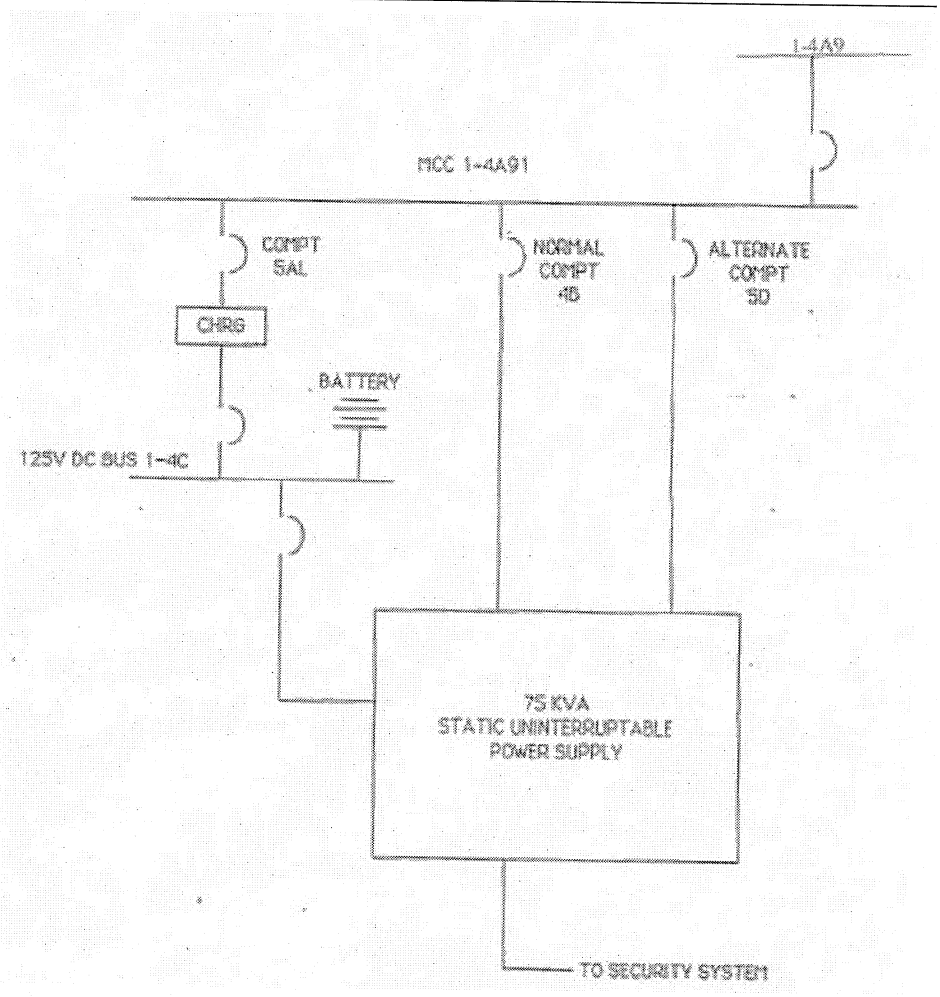

The security 125 volt subsystem is a single battery bank with a single battery charger. It provides the backup DC power system source to the security UPS,

058 AA2.02
RO 52

7. Given a set of plant conditions, PREDICT the response of the DCP System and the effect on overall plant conditions with regard to automatic control functions, signals, and interlocks.

8. DESCRIBE how the DCP System is used in the response to, and mitigation of, events as described in the applicable AOPs and EOPs. **AO**

9. Given a set of plant conditions, PREDICT the response of the DCP and the effects on overall plant operations for major component failures/ malfunctions.

10. STATE the Limiting Condition of Operation (not including the Actions) for the following Technical Specifications as they relate to the DCP System.
    a. 3.8.2.1 - DC Sources Operating
    b. 3.8.2.2 - DC Sources Shutdown
    c. 3.8.3.1 - Onsite Power Distribution Operating (125-volt DC portion)
    d. 3.8.3.2 - Onsite Power Distribution Shutdown (125-volt DC portion)

11. IDENTIFY entry conditions and required actions for the DCP System Technical Specifications that require actions to be taken in one hour or less.

12. Given a copy of the appropriate section of the Technical Specifications, properly APPLY the following Technical Specification and their bases (SRO only) to a given plant condition.
    a. 3.8.2.1 - DC Sources Operating
    b. 3.8.2.2 - DC Sources Shutdown
    c. 3.8.3.1 - Onsite Power Distribution Operating (125-volt DC portion)
    d. 3.8.3.2 - Onsite Power Distribution Shutdown (125-volt DC portion)

50. 058 G2.1.14 001/NEW//HIGHER//SRO/HARRIS/7/2007/NO

Given the following:

- The unit is at 100% power.
- The following alarm is received:
  - ALB-015, 4-4, 125 VDC EMER BUS A TROUBLE
- DP-1A-SA Bus voltage indicates 65 VDC and lowering.
- Battery Charger 1A-SA is tripped.

Which ONE (1) of the following describes the impact on the unit and the action required to restore the DC Bus?

A. TDAFW Pump remains operable if DC Bus "B" is operable; place the standby battery charger in service in accordance with OP-156.01, DC Electrical Distribution.

B. TDAFW Pump remains operable if DC Bus "B" is operable; notify Maintenance to determine the cause and initiate repairs prior to restoring the bus in accordance with AOP-025, Loss of One Emergency AC Bus (6.9 KV) or One Emergency DC Bus (125 VDC)

C. TDAFW pump is inoperable due to loss of power to MS-70; place the standby battery charger in service in accordance with OP-156.01, DC Electrical Distribution.

D. TDAFW pump is inoperable due to loss of power to MS-70; notify Maintenance to determine the cause and initiate repairs prior to restoring the bus in accordance with AOP-025, Loss of One Emergency AC Bus (6.9 KV) or One Emergency DC Bus (125 VDC)

D is correct. AOP-025 states that both the EDG and the TDAFW Pump are inoperable. Actions for loss of DC Bus. Would not place spare charger in service at 65 volts and decreasing on battery, require greater than 105 volts to place spare battery charger in service.

A and B are incorrect because TDAFW is declared inoperable, even if the other train is available to supply DC power. Actions for B are correct

C is incorrect because actions to place the spare charger in service will not be performed at this battery bus voltage

Question Number: 79

Tier 1 Group 1

Importance Rating: SRO 3.3

Technical Reference: ALB-15, 4-4, AOP-025
Proposed references to be provided to applicants during examination: None
Learning Objective: DCP text Obj 8
10 CFR Part 55 Content: 43.5, 43.2

Comments:

10CFR55.43(b).5 because the SRO must assess conditions and determine appropriate course of action. 10CFR55.43(b).2 because technical specification operability must be determined

05862.1.14
SRO 79

INSTRUCTIONS	RESPONSE NOT OBTAINED
3.3 Loss of DP-1A-SA Emergency DC Bus (125V)	
☐ **4. MONITOR** inverter output voltage and instrument readings for indication of proper voltage on instrument bus.	
☐ **5. CHECK** power to all instrument buses is ON.	☐ **5. REFER TO** AOP-24, Loss of Uninterruptible Power Supply.
☐ **6. DISPATCH** operator to inspect the following for fault conditions: • DP-1A-SA Emergency DC Bus • 125V Battery Chargers 1A-SA AND 1B-SA	
☐ **7. CONTACT** Maintenance as necessary to initiate repair or other corrective actions.	

NOTE

- Loss of DP-1A-SA will result in all equipment on that side becoming inoperable from the loss of EDG and Load Sequencer or DC control power.
- Local manual operation will be necessary for any breakers that have lost DC control power. **[C.1]**
- Loss of A-SA Emergency DC Bus will make the Turbine Driven AFW Pump inoperable due to loss of power to 1MS-70.

☐ **8. OPEN** all load breakers on DP-1A-SA.

9. WHEN conditions causing loss of DP-1A-SA are corrected, **THEN PERFORM** the following:

☐ **a. RESTORE** power to DP-1A-SA from the appropriate battery charger(s) per OP-156.01, DC Electrical Distribution.

(Continued Next Page)

TABLE 3.3-3 (Continued)

ENGINEERED SAFETY FEATURES ACTUATION SYSTEM INSTRUMENTATION

FUNCTIONAL UNIT	TOTAL NO. OF CHANNELS	CHANNELS TO TRIP	MINIMUM CHANNELS OPERABLE	APPLICABLE MODES	ACTION
6. Auxiliary Feedwater					
a. Manual Initiation					
1) Motor-Driven Pumps	1/pump	1/pump	1/pump	1, 2, 3	23
2) Turbine-Driven Pumps	2/pump	1/pump	2/pump	1, 2, 3	23
b. Automatic Actuation Logic and Actuation Relays	2	1	2	1, 2, 3	21
c. Steam Generator Water Level--Low-Low					
1) Start Motor-Driven Pumps	3/stm. gen.	2/stm. gen. in any stm. gen.	2/stm. gen. in each stm. gen.	1, 2, 3	19
2) Start Turbine-Driven Pump	3/stm. gen.	2/stm. gen. in any 2 stm. gen.	2/stm. gen. in each stm. gen.	1, 2, 3	19
d. Safety Injection Start Motor-Driven Pumps	See Item 1. above for all Safety Injection initiating functions and requirements.				
e. Loss-of-Offsite Power Start Motor-Driven Pumps and Turbine-Driven Pump	See Item 9. below for Loss of Offsite Power initiating functions and requirements.				
f. Trip of All Main Feedwater Pumps Start Motor-Driven Pumps	1/pump	1/pump	1/pump	1, 2	15

5A079
0586271.14

058 G2.1.14
SRO 79

7. Given a set of plant conditions, PREDICT the response of the DCP System and the effect on overall plant conditions with regard to automatic control functions, signals, and interlocks.

8. DESCRIBE how the DCP System is used in the response to, and mitigation of, events as described in the applicable AOPs and EOPs. **AO**

9. Given a set of plant conditions, PREDICT the response of the DCP and the effects on overall plant operations for major component failures/ malfunctions.

10. STATE the Limiting Condition of Operation (not including the Actions) for the following Technical Specifications as they relate to the DCP System.
    a. 3.8.2.1 - DC Sources Operating
    b. 3.8.2.2 - DC Sources Shutdown
    c. 3.8.3.1 - Onsite Power Distribution Operating (125-volt DC portion)
    d. 3.8.3.2 - Onsite Power Distribution Shutdown (125-volt DC portion)

11. IDENTIFY entry conditions and required actions for the DCP System Technical Specifications that require actions to be taken in one hour or less.

12. Given a copy of the appropriate section of the Technical Specifications, properly APPLY the following Technical Specification and their bases (SRO only) to a given plant condition.
    a. 3.8.2.1 - DC Sources Operating
    b. 3.8.2.2 - DC Sources Shutdown
    c. 3.8.3.1 - Onsite Power Distribution Operating (125-volt DC portion)
    d. 3.8.3.2 - Onsite Power Distribution Shutdown (125-volt DC portion)