Chapter 9: Auxiliary and Emergency Systems

Table of Contents

Section	Title	Page
9.1	CHEMICAL AND VOLUME CONTROL SYSTEM	9.1-1
9.1.1	Design Bases	9.1-1
9.1.1.1	Redundancy of Reactivity Control	9.1-2
9.1.1.2	Reactivity Shutdown Capability	9.1-2
9.1.1.3	Codes and Classifications	9.1-3
9.1.2	System Design and Operation	9.1-4
9.1.2.1	System Description	9.1-4
9.1.2.2	Reactor Coolant Activity Concentration, Monitoring, and Control	9.1-6
9.1.2.3	Tritium Production	9.1-8
9.1.2.4	Reactor Makeup Control	9.1-10
9.1.2.5	Charging Flow Control	9.1-13
9.1.2.6	Components	9.1-14
9.1.3	System Design Evaluation	9.1-20
9.1.3.1	Availability and Reliability	9.1-20
9.1.3.2	Control of Tritium	9.1-21
9.1.3.3	Leakage Provisions	9.1-22
9.1.3.4	Incident Control	9.1-22
9.1.3.5	Malfunction Analysis	9.1-23
9.1.3.6	Galvanic Corrosion	9.1-25
9.1.4	Minimum Operating Conditions	9.1-25
9.1.5	Tests and Inspections	9.1-25
9.1	References	9.1-26
9.1	Reference Drawings	9.1-26
9.2	BORON RECOVERY SYSTEM	9.2-1
9.2.1	Design Bases	9.2-1
9.2.2	Description	9.2-2
9.2.3	Design Evaluation	9.2-3
9.2.3.1	System Reliability	9.2-3
9.2.3.2	Malfunction Analysis	9.2-3
9.2.4	Tests And Inspections	9.2-3
9.2	Reference Drawings	9.2-4
9.3	RESIDUAL HEAT REMOVAL SYSTEM	9.3-1
9.3.1	Design Bases	9.3-1

Chapter 9: Auxiliary and Emergency Systems

Table of Contents (continued)

Section	Title	Page
9.3.1.1	Codes and Classifications	9.3-1
9.3.2	System Design and Operation	9.3-2
9.3.2.1	System Description	9.3-2
9.3.2.2	Components	9.3-3
9.3.3	System Design Evaluation	9.3-4
9.3.3.1	Availability and Reliability	9.3-4
9.3.3.2	Incident Control	9.3-4
9.3.3.3	Malfunction Analysis	9.3-5
9.3.4	Tests and Inspections	9.3-5
9.3	References	9.3-5
9.3	Reference Drawings	9.3-5
9.4	COMPONENT COOLING SYSTEMS	9.4-1
9.4.1	Design Bases	9.4-1
9.4.1.1	Component Cooling Water System	9.4-1
9.4.1.2	Chilled Component Cooling Water System	9.4-3
9.4.1.3	Chilled Water System	9.4-3
9.4.1.4	Neutron Shield Tank Cooling Water System	9.4-3
9.4.1.5	Charging Pump Cooling Water System	9.4-4
9.4.2	Piping and Valves (Check Valves and Manually Operated Gate, Butterfly, and Globe Valves)	9.4-4
9.4.3	System Descriptions	9.4-4
9.4.3.1	Component Cooling Water System Description	9.4-4
9.4.3.2	Chilled Component Cooling Water System Description	9.4-7
9.4.3.3	Chilled Water System Description	9.4-8
9.4.3.4	Neutron Shield Tank Cooling Water System Description	9.4-10
9.4.3.5	Charging Pump Component Cooling Water System Description	9.4-10
9.4.4	Design Evaluation	9.4-11
9.4.4.1	Component Cooling Water System Availability and Reliability	9.4-11
9.4.4.2	Component Cooling Water System Leakage Provisions	9.4-12
9.4.4.3	Incident Control	9.4-13
9.4.4.4	Component Cooling Makeup Water	9.4-13
9.4.4.5	Cooling Water Support for Other Systems	9.4-14
9.4.4.6	Component Cooling Water System Malfunction Analysis	9.4-14
9.4.4.7	Component Cooling Cleanup	9.4-14

Chapter 9: Auxiliary and Emergency Systems

Table of Contents (continued)

Section	Title	Page
9.4.5	Tests and Inspections	9.4-15
9.4.6	Minimum Operating Conditions	9.4-15
9.4	Reference DrawingsReference Drawings	9.4-15
9.5	FUEL POOL COOLING SYSTEM	9.5-1
9.5.1	Design Bases	9.5-1
9.5.2	System Description	9.5-1
9.5.2.1	Components	9.5-2
9.5.3	Design Evaluation	9.5-2
9.5.3.1	Availability and Reliability	9.5-2
9.5.3.2	Purification of Water	9.5-3
9.5.3.3	Fuel Pool Water Leakage Control	9.5-3
9.5.3.4	Heat Load	9.5-3
9.5.3.5	Malfunction Analysis	9.5-4
9.5.4	Tests and Inspection	9.5-4
9.5	Reference Drawings	9.5-5
9.6	SAMPLING SYSTEM	9.6-1
9.6.1	Design Bases	9.6-1
9.6.1.1	Sampling System—Routine Operation	9.6-1
9.6.1.2	High Radiation Sampling System—Post-Accident Operation	9.6-1
9.6.2	Description	9.6-3
9.6.2.1	Sampling System—Routine Operation	9.6-3
9.6.2.2	High Radiation Sampling System—Post-Accident Operation	9.6-4
9.6.3	Design Evaluation	9.6-8
9.6.3.1	Sampling System—Routine Operation	9.6-8
9.6.3.2	High Radiation Sampling System—Post-Accident Operation	9.6-8
9.6.4	Tests and Inspections	9.6-10
9.6.4.1	Sampling System—Routine Operation	9.6-10
9.6.4.2	High Radiation Sampling System—Post-Accident Operation	9.6-10
9.6	References	9.6-10
9.6	Reference Drawings	9.6-10
9.7	VENT AND DRAIN SYSTEM	9.7-1
9.7.1	Design Bases	9.7-1

Chapter 9: Auxiliary and Emergency Systems

Table of Contents (continued)

Section	Title	Page
9.7.2	Description	9.7-1
9.7.3	Design Evaluation	9.7-2
9.7.4	Tests and Inspections	9.7-3
9.7	Reference Drawings	9.7-4
9.8	COMPRESSED AIR SYSTEM	9.8-1
9.8.1	Design Bases	9.8-1
9.8.2	Description	9.8-2
9.8.3	Design Evaluation	9.8-4
9.8.4	Tests and Inspections	9.8-5
9.8	Reference Drawings	9.8-5
9.9	SERVICE WATER SYSTEM	9.9-1
9.9.1	Design Bases	9.9-1
9.9.1.1	Accident Design Bases	9.9-1
9.9.1.2	Emergency Service Water Pumps	9.9-2
9.9.1.3	System Operation During Design Basis Hurricane	9.9-2
9.9.2	Description	9.9-4
9.9.2.1	Charging Pump Service Water System Description	9.9-5
9.9.3	Design Evaluation	9.9-6
9.9.3.1	System Reliability	9.9-8
9.9.3.2	Malfunction Analysis.	9.9-8
9.9.4	Tests and Inspections	9.9-9
9.9	References	9.9-10
9.9	Reference Drawings	9.9-10
9.10	FIRE PROTECTION	9.10-1
9.10.1	Design Bases	9.10-1
9.10.2	Description	9.10-3
9.10.2.1	Fire Detection and Signaling	9.10-3
9.10.2.2	Fire Control Systems	9.10-6
9.10.2.3	Ventilation Systems	9.10-13
9.10.2.4	Floor Drains	9.10-14
9.10.2.5	Lighting Systems	9.10-15
9.10.2.6	Communications System	9.10-15

Chapter 9: Auxiliary and Emergency Systems

Table of Contents (continued)

Section	Title	Page
9.10.2.7	Electrical Cable	9.10-16
9.10.2.8	Fire-Barrier Penetration	9.10-16
9.10.2.9	Separation Criteria	9.10-17
9.10.2.10	Fire Barriers	9.10-17
9.10.2.11	Access and Egress	9.10-17
9.10.2.12	Toxic and Corrosive Combustion Products	9.10-18
9.10.3	Evaluation of Plant Features	9.10-18
9.10.3.1	Reactivity Control	9.10-18
9.10.3.2	Reactor Coolant System Inventory Control	9.10-19
9.10.3.3	Decay Heat Removal	9.10-19
9.10.3.4	Auxiliaries	9.10-20
9.10.3.5	Instrumentation and Control	9.10-21
9.10.3.6	Effects of Fire Suppression Systems on Safety Systems	9.10-21
9.10.4	Evaluation of Specific Plant Areas	9.10-22
9.10.4.1	Control Room Complex	9.10-22
9.10.4.2	Emergency Switchgear Rooms	9.10-24
9.10.4.3	Containment Penetration Vaults, Cable Tunnels, and Service Building Cable Vaults	9.10-25
9.10.4.4	Battery Rooms	9.10-26
9.10.4.5	Cable Tray Rooms	9.10-27
9.10.4.6	Switchgear Rooms	9.10-28
9.10.4.7	Motor Control Center Rooms	9.10-28
9.10.4.8	Auxiliary Building - Elevation 2 Ft.	9.10-29
9.10.4.9	Auxiliary Building - Elevation 13 Ft.	9.10-30
9.10.4.10	Auxiliary Building - Elevation 27 Ft. 6 In.	9.10-31
9.10.4.11	Auxiliary Building - Elevation 45 Ft. 10 In.	9.10-31
9.10.4.12	Reactor Containment Buildings	9.10-32
9.10.4.13	Containment Spray Pump and Auxiliary Feedwater Pump Buildings	9.10-34
9.10.4.14	Fuel Building	9.10-35
9.10.4.15	Safeguards Equipment Buildings	9.10-35
9.10.4.16	Intake Structure	9.10-36
9.10.4.17	Mechanical Equipment Room No. 3	9.10-37
9.10.4.18	Mechanical Equipment Room No. 4	9.10-37
9.10.4.19	Turbine Building	9.10-38
9.10.4.20	Diesel-Generator Rooms	9.10-39

Chapter 9: Auxiliary and Emergency Systems

Table of Contents (continued)

Section	Title	Page
9.10.4.21	Compressed-Gas Storage Areas	9.10-40
9.10.4.22	Transformer Area.	9.10-41
9.10.4.23	Fuel-Oil Pump Houses and Storage Tanks	9.10-41
9.10.4.24	Fire-Pump House	9.10-42
9.10.4.25	Auxiliary Boiler Room	9.10-43
9.10.4.26	Main Switchyard, Surry Nuclear Information Center (SNIC) and Gravel Neck Combustion Turbines	9.10-43
9.10.4.27	Mechanical Equipment Room No. 5	9.10-44
9.10.4.28	Condensate Polishing Building and Maintenance Building	9.10-44
9.10.5	Tests and Inspections	9.10-45
9.10.6	Administrative Controls	9.10-45
9.10	References	9.10-45
9.10	Reference Drawings	9.10-46
9.11	WATER SUPPLY AND TREATMENT SYSTEMS	9.11-1
9.11.1	Well-Water Supply System	9.11-1
9.11.2	Domestic Water Supply System	9.11-1
9.11.3	Make-Up Water System	9.11-1
9.11	Reference Drawings	9.11-2
9.12	FUEL HANDLING SYSTEM	9.12-1
9.12.1	Design Bases	9.12-1
9.12.2	System Design and Operation	9.12-1
9.12.3	Fuel-Handling Structures	9.12-2
9.12.3.1	Refueling Cavities	9.12-2
9.12.3.2	Fuel Transfer Canals and Transfer Tubes	9.12-2
9.12.3.3	Spent Fuel Pool	9.12-3
9.12.3.4	New-Fuel Storage	9.12-3
9.12.4	Refueling Equipment	9.12-4
9.12.4.1	Reactor Vessel Stud Tensioners	9.12-4
9.12.4.2	Reactor Vessel Head Lifting Device	9.12-4
9.12.4.3	Reactor Internals Lifting Device	9.12-4
9.12.4.4	Manipulator Crane	9.12-4
9.12.4.5	Motor-Driven Platform and Hoist	9.12-6
9.12.4.6	Fuel Handling Tools	9.12-6

Chapter 9: Auxiliary and Emergency Systems

Table of Contents (continued)

Section	Title	Page
9.12.4.7	Reactor Irradiation Sample and Sample Handling Tool	9.12-6
9.12.4.8	Core Mapping Equipment	9.12-7
9.12.4.9	Fuel Transfer System	9.12-7
9.12.4.10	Fuel Elevator	9.12-7
9.12.4.11	Control Rod Assembly Changing Fixture	9.12-7
9.12.4.12	Refueling Water Storage Tank	9.12-8
9.12.4.13	Fuel Cask Trolley	9.12-8
9.12.4.14	Polar Crane	9.12-9
9.12.5	Refueling Procedure	9.12-9
9.12.5.1	Design Bases	9.12-9
9.12.5.2	Preparation Sequence	9.12-9
9.12.5.3	Refueling Sequence	9.12-11
9.12.5.4	Reassembly Sequence	9.12-11
9.12.6	Fuel Handling System Design Evaluation	9.12-12
9.12.6.1	Incident Control	9.12-13
9.12.6.2	Malfunction Analysis	9.12-13
9.12.7	Minimum Operating Conditions	9.12-13
9.12.8	Tests and Inspections	9.12-13
9.12.9	Spent Fuel Storage at the Independent Spent Fuel Storage Installation (ISFSI)	9.12-14
9.12.9.1	[Deleted]	9.12-14
9.12.9.2	[Deleted]	9.12-14
9.12.9.3	[Deleted]	9.12-14
9.12	References	9.12-15
9.12	Reference Drawings	9.12-15
9.13	AUXILIARY VENTILATION SYSTEMS	9.13-1
9.13.1	General Description	9.13-1
9.13.2	Design Bases	9.13-3
9.13.3	System Descriptions	9.13-4
9.13.3.1	Auxiliary Building Ventilation	9.13-4
9.13.3.2	Fuel Building Ventilation	9.13-5
9.13.3.3	Decontamination Building Ventilation	9.13-6
9.13.3.4	Safeguards Area Ventilation	9.13-6
9.13.3.5	Service Building Ventilation	9.13-6

Chapter 9: Auxiliary and Emergency Systems

Table of Contents (continued)

Section	Title	Page
9.13.3.6	Main Control Room and Emergency Switchgear and Relay Room Ventilation	9.13-7
9.13.3.7	Auxiliary Ventilation Control Panel and Annunciator	9.13-8
9.13.3.8	Laundry Facility Ventilation	9.13-9
9.13.3.9	TSC Ventilation	9.13-9
9.13.3.10	LOEF Ventilation	9.13-9
9.13.4	Design Evaluation	9.13-9
9.13.4.1	Incident Control	9.13-10
9.13.4.2	Malfunction Analysis	9.13-12
9.13.5	Tests and Inspections	9.13-13
9.13	References	9.13-13
9.13	Reference Drawings	9.13-14
9.14	DECONTAMINATION FACILITY	9.14-1
9.14.1	Design Bases	9.14-1
9.14.2	Description	9.14-1
9.14.3	Design Evaluation	9.14-3
9.14.4	Tests And Inspections	9.14-3
9.14	Reference Drawings	9.14-3
Appendix 9A	High-Density Spent-Fuel Storage Rack Design	9A-i
Appendix 9B	Movement of Heavy Loads	9B-i
Appendix 9C	Flood Control System	9C-i

Chapter 9: Auxiliary and Emergency Systems

List of Tables

Table	Title	Page
Table 9.1-1	Chemical and Volume Control System Code Requirements	9.1-27
Table 9.1-2	Chemical and Volume Control System Principal Component Data Summary	9.1-28
Table 9.1-3	Chemical and Volume Control System Performance Requirements	9.1-31
Table 9.1-4	Fission Product Concentrations in the Reactor Coolant With Small Cladding Defects in One Percent of the Fuel Rods	9.1-32
Table 9.1-5	Parameters Used in the Calculation of Reactor Coolant Fission Product Activities	9.1-34
Table 9.1-6	Maximum Volume Control Tank Noble Gas Concentration in Vapor Phase With Small Cladding Defects in One Percent of the Fuel Rods	9.1-36
Table 9.1-7	Tritium Sources in Reactor Coolant Operation	9.1-37
Table 9.1-8	Boric Acid Storage Tank Water Chemistry	9.1-38
Table 9.1-9	Consequences of Failures or Malfunctions of the Chemical and Volume Control System Within the Reactor Containment	9.1-39
Table 9.2-1	Boron Recovery System Component Design Data	9.2-5
Table 9.2-2	Boron Recovery System Malfunction Analysis	9.2-17
Table 9.3-1	Residual Heat Removal System Code Requirements	9.3-6
Table 9.3-2	Residual Heat Removal System Design Data	9.3-7
Table 9.3-3	Residual Heat Removal System Chemistry Guidelines	9.3-8
Table 9.3-4	Residual Heat Removal Loop Malfunction Analysis	9.3-9
Table 9.4-1	Component Cooling Water System Component Design Data	9.4-17
Table 9.4-2	Chilled Water System Design Conditions	9.4-19
Table 9.4-3	Chilled Water Circulation Pump Data	9.4-20
Table 9.4-4	Chilled Water Surge Tank Data	9.4-21
Table 9.4-5	Chilled Water System Piping and Valve Data	9.4-21
Table 9.4-6	Neutron Shield Tank Cooling Water System Component Design Data	9.4-22
Table 9.4-7	Charging Pump Component Cooling Water System Component Design Data	9.4-23
Table 9.4-8	Consequences of Component Cooling Water System Malfunctions	9.4-24
Table 9.4-9	Component Cooling Water Reliance on Interconnected Systems	9.4-26
Table 9.4-10	Chilled Component Cooling Water System Component Design Data	9.4-27
Table 9.5-1	Fuel Pool Cooling System Component Design Data	9.5-6
Table 9.5-2	Major Isotopes Detected in Fuel Pool Water	9.5-8
Table 9.5-3	Malfunction Analysis	9.5-9
Table 9.6-1	Sampling System Routine Samples	9.6-11
Table 9.6-2	High Radiation Sampling System Sample Points	9.6-13
Table 9.6-3	Chemical Analysis Panel Instrumentation	9.6-13
Table 9.6-4	High Radiation Sampling System Waste Tank	9.6-14
Table 9.6-5	High Radiation Sampling System Waste Tank Pumps	9.6-14
Table 9.6-6	High Radiation Sampling System Evacuating Bellows Compressor	9.6-14

Chapter 9: Auxiliary and Emergency Systems

List of Tables (continued)

Table	Title	Page
Table 9.6-7	High Radiation Sampling System Sampling Panel Design Conditions	9.6-15
Table 9.7-1	Vent and Drain System Component Design Data	9.7-5
Table 9.8-1	Compressed Air System Design Data	9.8-6
Table 9.9-1	Automatic Operation of Condenser and Service Water Valves	9.9-11
Table 9.9-2	Service Water Requirements	9.9-12
Table 9.9-3	Charging Pump Service Water System	9.9-13
Table 9.10-1	Fire Protection System Component Design Data	9.10-47
Table 9.11-1	Domestic Water Supply Component Design Data	9.11-3
Table 9.12-1	Fuel-Handling Data	9.12-16
Table 9.13-1	Main Control Room And Emergency Switchgear and Relay Room Ventilation and Air Conditioning Systems Design Data	9.13-15
Table 9.14-1	Decontamination Facility Component Data	9.14-4

Chapter 9: Auxiliary and Emergency Systems

List of Figures

Figure	Title	Page
Figure 9.1-1	Chemical And Volume Control System	9.1-40
Figure 9.2-1	Boron Recovery System	9.2-18
Figure 9.3-1	Residual Heat Removal System	9.3-10
Figure 9.4-1	Component Cooling Water System	9.4-28
Figure 9.4-2	Chilled Component Cooling Water System	9.4-29
Figure 9.4-3	Chilled Water System	9.4-30
Figure 9.4-4	Neutron Shield Tank Cooling Water System	9.4-31
Figure 9.4-5	Charging Pump Component Cooling Water System	9.4-32
Figure 9.5-1	Fuel Pool Cooling System	9.5-10
Figure 9.6-1	Primary Sampling System	9.6-16
Figure 9.7-1	Primary Vent And Drain System	9.7-10
Figure 9.8-1	Compressed Air System	9.8-9
Figure 9.9-1	Service Water System	9.9-14
Figure 9.10-1	Fire Protection System Arrangement	9.10-49
Figure 9.11-1	Well Water System	9.11-4
Figure 9.11-2	Demineralizers	9.11-5
Figure 9.12-1	Fuel Transfer System	9.12-17
Figure 9.13-1	Ventilation Arrangement: Primary Plant	9.13-16
Figure 9.13-2	Ventilation Arrangement: Fuel, Decontamination, Auxiliary, and Service Buildings	9.13-17
Figure 9.13-3	Ventilation Arrangement: Control Room	9.13-18

Intentionally Blank

Chapter 9
AUXILIARY AND EMERGENCY SYSTEMS

Note: As required by the Renewed Operating Licenses for Surry Units 1 and 2, issued March 20, 2003, various systems, structures, and components discussed within this chapter are subject to aging management. The programs and activities necessary to manage the aging of these systems, structures, and components are discussed in Chapter 18.

9.1 CHEMICAL AND VOLUME CONTROL SYSTEM

The chemical and volume control system is used to:

1. Adjust the concentration of the chemical neutron absorber for chemical reactivity control.
2. Maintain the proper water inventory in the reactor coolant system.
3. Provide the required seal-water flow for the reactor coolant pump shaft seals.
4. Provide high-pressure flow to the safety injection system.
5. Provide for reactor coolant cleanup and degasification.
6. Maintain the proper concentration of corrosion-inhibiting chemicals in the reactor coolant.
7. Provide a means for filling the reactor coolant system.
8. Provide a means for draining the reactor coolant system to the primary drain system by means of the excess letdown flow path.

The chemical and volume control system has provision for injecting the following chemicals into the reactor coolant system, as required:

1. Hydrogen
2. Lithium hydroxide
3. Hydrogen peroxide
4. Hydrazine

9.1.1 Design Bases

During normal unit operation, the chemical and volume control system is designed to automatically provide boric acid solution at a preset concentration, which matches the reactor coolant system boron concentration, to compensate for minor leakage of reactor coolant.

The chemical and volume control system design also permits the addition of a preselected quantity of reactor primary-grade makeup water or concentrated boric acid solution at a preselected flow rate to the reactor coolant system.

The chemical and volume control system has the capacity to achieve cold shutdown of both units, each with one control rod assembly completely withdrawn following a refueling shutdown. One boric acid storage tank has sufficient capacity (if maintained above the low-level alarm point) to provide a cold shutdown for one unit with one control rod assembly completely withdrawn.

9.1.1.1 **Redundancy of Reactivity Control**

In addition to the reactivity control achieved by the control rod assemblies, as detailed in Section 7.3, reactivity control is provided by the chemical and volume control system, which regulates the concentration of boric acid solution in the reactor coolant system. Under postulated system malfunctions, the system is designed to prevent uncontrolled or inadvertent reactivity changes that might stress the system beyond design limits.

9.1.1.2 **Reactivity Shutdown Capability**

Normal reactivity shutdown capability is provided by control rod assemblies, with boric acid injection used to compensate for the xenon transient and for unit cooldown. Any time that the unit is at power, the quantity of boric acid retained in the boric acid storage tanks and ready for injection always exceeds that quantity required for a cold shutdown.

The boric acid solution is transferred from the boric acid storage tanks by boric acid transfer pumps to the suction of the charging pumps, which inject boric acid into the reactor coolant. Any charging pump and any boric acid transfer pump is capable of being operated from diesel-generator power on loss of primary power. Boric acid is injected by one charging and one boric acid transfer pump at the approximate reactivity insertion rate of -0.14% delta k/k per minute, which shuts the reactor down in 25 minutes with no rods inserted. In 25 additional minutes, enough boric acid can be injected to compensate for xenon decay, although xenon decay below the equilibrium operating level does not begin until approximately 20 hours after shutdown from full power. Additional boric acid is added if it is desired to bring the reactor to cold shutdown conditions.

On the basis of the above, the injection of boric acid provides backup shutdown reactivity capability, independent of control rod assemblies, which normally serve this function in the short-term situation. Shutdown for long-term and reduced-temperature conditions is accomplished with boric acid injection using redundant components.

The reactivity control systems provided are capable of making and holding the core subcritical for any cold shutdown, hot shutdown, or hot operating condition, including those resulting from power changes. The maximum excess reactivity expected for reload cores occurs at the beginning of life, no xenon conditions. A total of 48 control rod assemblies is provided. The assemblies are divided into two categories comprising four control banks and two shutdown banks.

The control banks, used in combination with soluble boron, provide control of the reactivity changes at power throughout the life of the core. The control banks are used to compensate for

short-term reactivity changes at power that might be produced due to variations in reactor power requirements or in coolant temperature. The soluble boron control is used to compensate for the slower changes in reactivity throughout core life, such as those due to fuel depletion and fission product buildup and decay.

The reactor core, together with the reactor control system and the reactor protection system, is designed so that the minimum departure from nucleate boiling ratio (DNBR) will not be less than the design DNBR limit (Section 3.2.3) and there will be no fuel melting during normal operation, including anticipated transients.

Shutdown control rod assemblies are provided to supplement the control rod assembly control groups to make the reactor at least 1.77% delta k/k subcritical following trip from any credible operating condition to the hot shutdown condition. This assumes the highest-worth control rod assembly remains in the fully withdrawn position.

Sufficient shutdown capability is also provided to ensure no DNB occurs for the most severe anticipated cooldown transient associated with a single active failure, i.e., accidental opening of a steam bypass valve or relief valve. This is achieved with a combination of control rod assemblies and automatic boron addition via the safety injection system with the highest-worth rod being fully withdrawn. Manually controlled boric acid addition is used to maintain the shutdown margin for the long-term conditions of xenon decay and reactor coolant system cooldown.

9.1.1.3 **Codes and Classifications**

The codes and classifications of chemical and volume control system components are stated in Table 9.1-1.

Both the regenerative and excess letdown heat exchangers are classified Class C according to the ASME Code, Section III. At the time of procurement, these heat exchangers met all of the requirements for Class C vessels. Westinghouse supplemented these minimum requirements with the following additional requirements:

1. Welded tube to tube sheet joints.
2. Gas leak test of tube to tubesheet welds in addition to full differential pressure hydrostatic tests.
3. Special tube to tubesheet weld procedure qualifications.
4. Ultrasonic or eddy current test of tubing.
5. Dye penetrant examination of tube to tubesheet welds and root pass as well as final pass to all other pressure containing welds.
6. Fatigue analysis as required by paragraph 415.1 of Section III to demonstrate that the unit can withstand the transients that it is expected to experience during its design life.

In addition, Westinghouse equipment specifications for the regenerative and excess letdown heat exchangers met the basic requirements of Appendix IX of the ASME Code, except that Westinghouse did not require nondestructive test personnel to be qualified to American Society for Nondestructive Testing procedures. Where the suppliers' personnel were not so qualified, Westinghouse assured that suppliers' personnel were adequately qualified by periodic observation of their performance, and Westinghouse also performed the customary final inspections. As noted above, Westinghouse quality assurance levels and quality control procedures were in excess of standard code requirements for Class C vessels.

The replacement tube bundle for the Unit 1 Excess Letdown Heat Exchanger (1-CH-E-4) was fabricated to ASME Section VIII, Div. 1, 1992 and A92 requirements. Code reconciliation concluded that the original requirements were met or exceeded, including the additional requirements previously specified. The fabrication and testing were witnessed by Virginia Power personnel and by an Authorized Nuclear Inspector, as applicable.

9.1.2 System Design and Operation

The chemical and volume control system is shown in Figure 9.1-1 and Reference Drawings 1 through 3. The system is provided with overpressure devices, such as safety valves, to protect components whose design pressure and temperature are less than the reactor coolant system design limits. System discharge from overpressure protective devices and other system leakages are directed to closed system.

System design enables post-operational hydrostatic testing to applicable code test pressures, with the relief valves gagged. After hydrostatic testing, the relief valves are set at the system design pressure.

The components in the chemical and volume control system that the two units share are the three boric acid storage tanks and the boric acid batch tank. These tanks are listed in Table 9.1-2.

9.1.2.1 System Description

During normal unit operation, reactor coolant flows through the letdown line from the reactor coolant pump discharge side of reactor coolant loop number 1 cold leg, and returns through the charging line to the reactor coolant pump discharge side of the cold leg of loop number 2. The charging line has a check valve located downstream of the charging line isolation valve. An excess letdown path from the reactor coolant system is provided in the event that the normal letdown path is nonfunctional. Reactor coolant can be discharged from each reactor coolant loop, or all loops concurrently, through the common loop drain header to the tube side of the excess letdown heat exchanger. Each of the connections to the reactor coolant system loops has an isolation valve located close to the loop piping.

Reactor coolant entering the chemical and volume control system flows through the shell side of the regenerative heat exchanger, where its temperature is reduced. The coolant then flows through the letdown orifices to reduce the coolant pressure. The letdown flow leaves the reactor

containment and enters the auxiliary building, where it undergoes a second temperature reduction in the tube side of the nonregenerative heat exchanger, followed by a second pressure reduction by a low-pressure letdown valve. After passing through one of the mixed-bed demineralizers, where anionic and cationic impurities are removed, coolant flows through the reactor coolant filter and enters the volume control tank through a spray nozzle. Reactor coolant letdown flow is diverted to the boron recovery system (Section 9.2) on a high-level signal from the volume control tank.

The cation-bed demineralizer, located downstream of the mixed-bed demineralizer, is used intermittently to control cesium activity in the coolant and also to remove excess lithium, which is formed from B^{10}(n, a) Li^7 reaction.

Hydrogen is automatically supplied, as determined by pressure control, to the vapor space in the volume control tank, which is predominantly hydrogen and water vapor. The hydrogen within this tank is, in turn, the supply source to the reactor coolant. Fission gases are periodically removed from the system by venting the volume control tank to the vent and drain system (Section 9.7) or by diverting the letdown stream to the primary drain tank and then to the gas stripper in the boron recovery system before a cold or refueling shutdown. The coolant flows from the volume control tank to the charging pumps, which raise the coolant pressure above that in the reactor coolant system. The coolant then enters the containment, passes through and is heated in the tube side of the regenerative heat exchanger, and then returns to the reactor coolant system.

A portion of the high-pressure charging flow is injected into the reactor coolant pumps between the pump impeller and the shaft seal so that the seals are not exposed to high-temperature reactor coolant.

From the injection flow of 8 gpm, 3 gpm passes through the pump radial bearing and on to the chemical and volume control system, and 5 gpm passes through the thermal barrier heat exchanger and into the reactor coolant system, where it constitutes a portion of reactor coolant system water makeup. Shaft seal leakage flow is filtered, cooled in the seal-water heat exchanger, and returned to the suction of the charging pumps. Coolant injected through the reactor coolant pump labyrinth seals returns to the volume control tank by the normal letdown flow path through the regenerative heat exchanger. Indication of seal injection flow is provided locally and in the control room.

When the normal letdown flow route is not in service, labyrinth seal injection flow is returned to the suction of the charging pumps through the excess letdown and seal-water heat exchangers.

Boric acid is dissolved in heated water in the batching tank to a concentration of at least 7.0% (but not > 8.5%) by weight. The lower portion of the batching tank is jacketed to utilize low-pressure steam to permit heating of the batching tank solution. One of four boric acid transfer pumps is used to transfer this concentrated solution to the boric acid storage tanks. Small quantities of boric acid solution from the boric acid storage tanks are metered from the discharge of an operating boric acid transfer pump for blending with the water supplied to makeup for

normal leakage losses, or for increasing the reactor coolant boron concentration during normal load follow operation. Electric immersion heaters maintain the solution in the boric acid storage tanks at an elevated temperature to prevent precipitation. The design temperature to ensure that the boric acid remains in solution at its highest concentrations is ≥112°F.

During unit start-up, normal operation, load reductions, and shutdowns, liquid effluents containing boric acid flow from the reactor coolant system through the letdown line and are collected in the boron recovery system (Section 9.2). Cover gases displaced during the filling of volume control tanks are vented to the gaseous waste disposal system (Section 11.2.5).

During the unit cooldown phase and when the unit is in cold shutdown, the residual heat removal loop is operated to control RCS temperature. Because of the lower pressure in the reactor coolant system, insufficient pressure exists to maintain flow through the letdown orifices. A purification flow path is provided to remove fission and corrosion products, and other solid and liquid impurities. During the time that the RHR system is secured and the reactor coolant system is above 350°F the purification flow isolation valve, 1-RH-HCV-1142, is normally closed and is opened as required to fill the system from letdown.

A portion of the flow leaving the residual heat exchangers passes through the nonregenerative heat exchanger, mixed-bed demineralizers, reactor coolant filter, and volume control tank. The fluid then is pumped by the charging pump through the tube side of the regenerative heat exchanger into the reactor coolant system and, through the auxiliary spray line, into the pressurizer.

The letdown orifice isolation valves and the pressurizer auxiliary spray valves are equipped with quick-disconnect instrument air fittings to allow connection to a portable air source for local operation. The operation of the letdown orifice isolation valves provides an alternate letdown path during plant cooldown following a postulated fire in accordance with the requirements of Appendix R to 10 CFR 50. The analysis for Appendix R requires that the auxiliary spray valve be closed and disabled to ensure pressurizer pressure control. The auxiliary spray valve quick disconnect is not credited in the Appendix R analysis.

Table 9.1-2 lists principle component data for the chemical and volume control system, Table 9.1-3 lists system performance requirements, and Table 9.1-4 gives data for reactor coolant fission product concentrations.

9.1.2.2 **Reactor Coolant Activity Concentration, Monitoring, and Control**

The parameters used in the calculation of the reactor coolant fission product inventory, including pertinent information concerning the coolant cleanup flow rate and the demineralizer effectiveness, are presented in Table 9.1-5. The results of the calculations are presented in Table 9.1-4. In these calculations, the defective fuel rods are assumed to be uniformly distributed throughout the core and the fission product escape rate coefficients are therefore based upon an

average fuel temperature. Volume control tank noble gas concentrations with 1% failed fuel are shown in Table 9.1-6.

The fission product activity in the reactor coolant in the letdown stream of the regenerative heat exchanger during operation with small cladding defects in 1% of the fuel rods is computed using the following differential equations:

For parent nuclides in the coolant,

$$\frac{dN_{wi}}{dt} = D_{V_i} N_{C_i} - \left(\lambda_i + R_{\eta_i} + \frac{B'}{B_O - tB'}\right) N_{wi}$$

For daughter nuclides in the coolant,

$$\frac{dN_{wj}}{dt} = D_{V_j} N_{C_j} - \left(\lambda_i + R_{\eta_i} + \frac{B'}{B_O - tB'}\right) N_{wj} + \lambda_i N_{wi}$$

Where:

N = population of nuclide units

D = fraction of fuel rods having defective cladding

R = purification flow, coolant system volumes per sec

B_o = initial boron concentration, ppm

B' = boron concentration reduction rate by feed and bleed, ppm/sec

t = time, sec or fraction

η = removal efficiency of purification cycle for nuclide

λ = radioactive decay constant

v = escape rate coefficient for diffusion into coolant

Subscript C refers to “core”
Subscript w refers to “coolant”
Subscript i refers to “parent nuclide”
Subscript j refers to “daughter nuclide”

During unit operation, continuous monitoring of the reactor coolant is accomplished by means of high-range and low-range gross activity monitors. These monitors, which are described in Section 11.3.3, are capable of determining any sudden increase in activity level due to failed fuel within the range of 10^{-4} μCi/cc to 10^{3} μCi/cc.

The Technical Specification limit on reactor coolant activity provides adequate protection to the general public. The limits on reactor coolant system leakage and on effluent releases govern

the potential release of coolant activity to the environment during normal reactor operation, and have been established on the basis of the limiting values of reactor coolant activity. The reference accident considered for the bases is the steam generator tube rupture (Section 14.3.1).

Rupture of a steam generator tube would allow a portion of the reactor coolant activity to enter the steam and feedwater systems outside the containment. In this event, the radioactive noncondensable gases would be detected by the radiation monitor located in the air ejector effluent line. When the radioactivity level reaches the alarm setpoint of the monitor, trip valves in the effluent line automatically actuate to divert the flow to the containment and to close the vent to atmosphere. Once safety injection is initiated, the air ejector exhaust is automatically isolated from containment. The ejector would then vent to the turbine building via vents in the ejector loop seals. The effluent can also be manually routed through the ventilation vent no. 2 at a location equipped with a high range radiation monitor. The radiological consequences of a steam generator tube rupture have been evaluated and determined to be acceptable as discussed in Section 14.3.1.

9.1.2.3 **Tritium Production**

9.1.2.3.1 Overall Tritium Sources

Within a pressurized light-water reactor, tritium is formed from several sources. The greatest potential source is the fissioning of uranium fuel, which yields tritium as a ternary fission product at a rate of approximately 8×10^{-5} atoms per fission, or 1.05×10^{-2} Ci/MWt/day. Boron-bearing burnable poison rods are also a source of tritium. The amount of tritium appearing in the reactor coolant from these two sources is a function of the fuel and burnable poison cladding material permeability to tritium.

A direct source of tritium in the reactor coolant is the reaction of neutrons with dissolved boron used for reactivity control. The boron concentration is approximately 2000 ppm at the beginning of the fuel cycle, and is reduced to zero at the end of the fuel cycle. Neutron reactions with lithium are also a direct source of tritium. Lithium is present for pH control, and as a product of boron reactions with neutrons. The amount of lithium present, however, is carefully controlled to approximately 0.7-3.7 ppm by demineralization and/or chemical additions. A minute amount of tritium is also produced by neutron reactions with naturally occurring deuterium in light water.

9.1.2.3.2 Specific Tritium Sources

9.1.2.3.2.1 Ternary Fissions - Clad Diffusion. A program was undertaken by Westinghouse to determine the source of tritium in the reactor coolant in operating plants with both stainless steel and Zircaloy cladding. This program clearly indicated that, for the then-current generation of Westinghouse reactors with Zircaloy-clad fuel, 1% or less of the tritium produced in the fuel would diffuse through the cladding into the coolant.

The Ginna plant (nominal 1455 MWt) has Zircaloy cladding. At one point, after approximately 8 months of operation, the tritium concentrations were less than 0.3 μCi/cc in the reactor coolant. The monthly discharges from the plant averaged approximately 5 Ci/month.

Experiences at the Beznau (Switzerland) and Jose Cabrera (Spain) plants were comparable. A program to follow the buildup of tritium at the Ginna plant indicated a potential source from the core which was 1% or less of the ternary fissions generated in the fuel.

Westinghouse has in the past assumed that 30% of the tritium from ternary fissions would diffuse through the Zircaloy-clad fuel. Such fuel was used as a basis for systems and operational design. Present experience indicates that this was conservative.

Like Zircaloy, ZIRLO is made of approximately 98% zirconium. The properties of ZIRLO cladding relative to tritium release are not expected to differ significantly from Zircaloy (Reference 2).

9.1.2.3.2.2 Boron Reactions. The neutron reactions with boron that result in the production of tritium are:

B^{10} (n, 2 α) T

B^{10} (n, α) Li^7 (n, n α) T

B^{11} (n, T) Be^9

B^{10} (n, d) Be^{9*} (n, α) Li^6 (n, α) T

Of the above reactions, only the first two contribute significantly to tritium production in a pressurized-water reactor. The B^{11} (n, T) Be^9 reaction has a threshold of 14 MeV and a cross section of 5 mb. Since the number of neutrons produced at this energy is less than 10^9 n/cm^2/sec, the tritium produced from this reaction is negligible. The B^{10} (n, d) reaction may be neglected, since Be^{9*} produced in this reaction has been found to be unstable.

9.1.2.3.2.3 Lithium Reactions. The neutron reactions with lithium resulting in the production of tritium are:

Li^7 (n, n α) T

Li^6 (n, α) T

In Westinghouse reactors, lithium is used for pH adjustment of the reactor coolant. The reactor coolant lithium concentration is maintained between 0.7 and 3.7 ppm lithium by the addition of Li^7OH and by the use of cation resin. This demineralizer will remove any excess of lithium such as could be produced in the B^{10} (n, α) Li^7 reaction.

The Li^6 (n, α) T reaction is controlled by limiting the Li^6 impurity in the Li^7OH used in the reactor coolant and by lithiating the demineralizers with 99.9 atom% $Li^{7.}$

9.1.2.3.2.4 Control Rod Sources. In a fixed burnable poison rod the two primary sources of tritium generation are the B^{10} (n, 2 α) T and the B^{10} (n, α) Li^7 (n, n α) T reactions. Unlike the coolant where the Li^7 level is controlled at 0.7-3.7 ppm, there is a buildup of Li^7 in the burnable poison rod. Tritium production in a burnable poison rod is approximately 72 Ci/lb B^{10} during its first cycle of exposure.

The control rod materials used are Ag-In-Cd, which are not tritium sources.

9.1.2.3.2.5 Deuterium Reactions. Since the amount of naturally occurring deuterium in water is less than 0.0015, the tritium produced from this reaction is negligible (less than 1 Ci per year).

Tritium sources in the reactor coolant systems of the Surry units are listed in Table 9.1-7. They are presented on the basis of 12 months of operation at full power at a 0.8 load factor.

Two columns are presented in the tables; a previous design value and the presently expected tritium release value to the reactor coolant. The design values are based on a release of 30% of the tritium produced being diffused through the fuel cladding.

A tritium limit is established to meet the allowable concentration in the circulating water discharge. For one unit, the production rate of tritium due to ternary fission is calculated to be 7850 Ci/yr., and 30%, as a design basis, is assumed to be released to the coolant by recoil through the cladding. (See Table 9.1-7.) To this is added tritium from other sources, for a total of approximately 2745 Ci/yr. of total tritium activity added to the reactor coolant during the initial fuel cycle, and 2750 Ci/yr. during an equilibrium fuel cycle. Using the projected turnover rate of four reactor coolant system volumes per year or more, the tritium activity in the primary coolant should never increase beyond about 2.5 μCi/cc.

9.1.2.4 **Reactor Makeup Control**

Reactor makeup control consists of an instrument and control group arranged to provide a manually preselected makeup composition to the charging pump suction header or the volume control tank. The makeup control functions are designed to maintain desired operating fluid inventory in the volume control tank and to adjust reactor coolant boron concentration for chemical shim reactivity control.

Makeup for normal primary system leakage is regulated by reactor makeup control, which is set by the operator to blend water from the primary-water tanks with concentrated boric acid to match the reactor coolant boron concentration. Makeup is added automatically if the volume control tank level falls below a preset value.

Reactor makeup control is designed to operate from the control room by manually preselecting makeup composition to the charging pump suction header or the volume control tank. This maintains the desired operating fluid inventory in the volume control tank and adjusts the reactor coolant boron concentration for proper reactivity control. The operator can stop the

makeup operation at any time in any operating mode by remotely closing the makeup stop valves, or by placing the makeup mode control switch to stop.

One primary-water supply pump and one boric acid transfer pump normally are operated. If either pump trips, an alarm alerts the operator to a deviation of flow rate from the control setpoint. The standby primary water makeup pump will start automatically due to low header pressure, or it may be started manually. The standby boric acid transfer pump is started manually.

Makeup water to the reactor coolant system is provided through the chemical and volume control system from the following sources:

1. The primary-water tanks, which provide water for primary coolant dilution when the reactor coolant boron concentration is to be reduced.
2. The boric acid storage tanks, which supply a concentrated boric acid solution when reactor coolant boron concentration is to be increased. Water chemistry for the boric acid storage tanks is shown in Table 9.1-8.
3. The refueling water storage tank, which supplies borated water for emergency makeup.
4. The chemical mixing tank, which is used to inject small quantities of solution when additions of a pH control chemical are necessary.

Seal-water inleakage to the reactor coolant system requires a continuous letdown of reactor coolant to maintain the desired inventory. In addition, bleed and feed of reactor coolant is required for removal of impurities and adjustment of boric acid in the reactor coolant.

9.1.2.4.1 Automatic Makeup Mode

The automatic makeup mode of operation of the reactor coolant water makeup control scheme provides boric acid solution at a preset concentration to match the boron concentration in the reactor coolant system. The automatic makeup compensates for minor leakage of reactor coolant without causing significant change in the boron concentration of the coolant.

Under normal unit operating conditions, makeup control is set for automatic operation. A preset low-level signal from the volume control tank level controller causes the automatic makeup control action to increase the speed on the normally running boric acid transfer pump, open the makeup stop valve to the charging pump suction, modulate closed the concentrated boric acid control valve, and modulate open the reactor primary-water makeup control valve. One primary-water supply pump is always in operation. The flow controllers then blend the makeup stream according to the preset concentration. Makeup addition to the charging pump suction header causes the water level in the volume control tank to rise. At a preset high-level point, the makeup is stopped, the reactor primary-water makeup control valve closes, the boric acid transfer pump returns to low speed, the concentrated boric acid control valve opens, and the makeup stop valve to the charging pump suction closes.

9.1.2.4.2 Dilution Mode

The dilution mode of operation permits addition of a preselected quantity of reactor primary-grade water makeup at a preselected flow rate to the reactor coolant system. The operator selects the dilution mode, sets the reactor primary-water makeup flow controller setpoint to the desired flow rate, sets the reactor primary-water makeup batch integrator to the appropriate quantity if desired, and initiates system start. This opens the primary-grade water makeup control valve, which delivers primary-grade water to the volume control tank. Excessive rise of the volume control tank water level is prevented by automatic actuation of a three-way diversion valve, which routes the reactor coolant letdown flow to the boron recovery system. When the appropriate quantity of reactor primary-water makeup is added, the batch integrater causes the reactor primary-water makeup control valve to close, or the operator stops the makeup by placing the makeup mode control switch to stop.

9.1.2.4.3 Boration Mode

The boration mode of operation permits the addition of a preselected quantity of concentrated boric acid solution at a preselected flow rate to the reactor coolant system. The operator selects the boration mode, sets the concentrated boric acid flow controller setpoint to the desired flow rate, sets the concentrated boric acid batch integrater to the appropriate quantity if desired, and initiates system start. This opens the makeup stop valve to the charging pumps suction and the boric acid control valve. It also increases the speed on the normally operating boric acid transfer pump, which delivers a boric acid solution of at least 7.0% (but not 8.5%) by weight to the charging pump suction header.

When the appropriate quantity of concentrated boric acid solution is added, the batch integrator causes the boric acid transfer pump to return to low speed and closes the makeup stop valve to the suction of the charging pumps. The operation may be terminated manually at any time by actuating the makeup stop valve, or placing the makeup mode control switch to stop.

The operator usually initiates the boration mode of operation. There is no automatic actuation of the system except in the case of a volume control tank low-low-level signal. In this event, the charging pump suction is aligned to the refueling water storage tank, which contains boron nominally at 2400 ppm.

The maximum rate of boration of the primary system with the 60-gpm discharge of a boric acid transfer pump directed to the charging pump suction is 14.1 ppm/minute assuming 7.0 weight percent boric acid in the tanks. This provides compensation for a cooldown rate of approximately 4.9°F/min at the end of core life when the moderator temperature coefficient is most negative.

The maximum rate of boration corresponding to charging and letdown at the maximum design letdown flow rate of 120 gpm and assuming suction from the refueling water storage tank

at the nominal (mid-point of range) concentration of 2400 ppm, is 5.5 ppm/min. At the end of cycle, this boration rate is adequate to compensate for a cooldown rate of 1.9°F/min.

9.1.2.4.4 Alarm Functions

Reactor makeup control is provided with alarm functions to call the operator's attention to the following conditions:

1. Deviation of reactor primary-water makeup flow rate from the control setpoint.
2. Deviation of concentrated boric acid flow rate from the control setpoint.
3. High-level and low-level in the volume control tank. The high-level alarm indicates that the level in the tank is approaching a high level resulting in 100% diversion of the letdown stream to the boron recovery system. The low-level alarm indicates that the level in the volume control tank is approaching a low-low or emergency level in a case where the primary makeup control selector is not set for the automatic makeup mode and the volume control tank level drops below the makeup initiation point.
4. Low-low level in the volume control tank.

9.1.2.5 **Charging Flow Control**

Three single-speed horizontal centrifugal charging pumps are used to supply charging flow to the reactor coolant system and to perform the safety injection function, as discussed in Sections 6.1 and 6.2. The charging mode and the safety injection mode represent separate operating ranges on the pump head curves.

A flow transmitter on the charging line upstream of the regenerative heat exchanger transmits a signal to an indicator-controller in the control room. The controller regulates a throttling valve in the charging line to maintain a preset charging flow. A reactor coolant system pressurizer water level error signal resets the charging flow setpoint to provide corrective action. If the pressurizer level increases, the error signal changes the charging flow setpoint to a lower value which causes the control valve to move towards the closed position. The controller is provided with adjustable maximum and minimum flow limits. Maximum flow is limited to prevent entry into the safety injection mode and start-up of the standby charging pump during normal unit transient conditions. Minimum flow is limited to prevent flashing downstream from the letdown orifices.

Flow verification is provided by charging flow indication or, when the system is aligned to the fill header, by fill header flow indication. Separate power sources supply each indication. This increases the system reliability so that if a loss of a vital bus occurs, the operator could verify a flow of water entering the cooling system by re-aligning flow through the unaffected flow path.

A pressure switch in the charging pump discharge header actuates an alarm and starts a standby charging pump if the discharge header pressure falls to a preset low level.

The safety injection signal overrides any other associated control signal.

9.1.2.6 **Components**

A summary of principal component data is given in Table 9.1-2.

9.1.2.6.1 Regenerative Heat Exchanger

The regenerative heat exchanger is designed to recover the heat from the letdown stream by reheating the charging stream during normal operation. This exchanger also limits the temperature rise that occurs at the letdown orifices during transient periods when letdown flow exceeds charging flow.

The letdown stream flows through the shell of the regenerative heat exchanger, and the charging stream flows through the tubes. The exchanger is fabricated of austenitic stainless steel, and is of all-welded construction. The regenerative heat exchanger is capable of withstanding the thermal and pressure stresses resulting from the expected transients in working fluid temperature and pressure.

9.1.2.6.2 Letdown Orifices

Parallel letdown orifices are used to control the flow of the letdown stream during normal operation and reduce the coolant pressure to a value compatible with the nonregenerative heat exchanger design. Two orifices are used to attain maximum purification flow at normal reactor coolant system operating pressure, and the third orifice serves as a spare.

The orifices are placed in service by remote manual operation of their respective isolation valves. The standby orifice is used in parallel with the normally operating orifices in order to increase letdown flow when the reactor coolant system pressure is below normal. This arrangement provides standby capacity for control of letdown flow. Each orifice is constructed of austenitic pipe containing a corrosion-resistant and erosion-resistant insert bored to the diameter required.

9.1.2.6.3 Nonregenerative Heat Exchanger

The nonregenerative heat exchanger cools the letdown stream to the operating temperature of the mixed-bed demineralizers. Reactor coolant flows through the tube side of the exchanger while component cooling water flows through the shell. The letdown stream outlet temperature is automatically controlled by a temperature control valve in the component cooling water outlet stream. The unit is a multiple-pass-tube heat exchanger. All surfaces in contact with the reactor coolant are austenitic stainless steel, and the shell is carbon steel.

9.1.2.6.4 Mixed-Bed Demineralizers

Two flushable mixed-bed demineralizers maintain reactor coolant purity by the use of a Li^7 cation resin and a hydroxyl-form anion resin. These resins remove fission and corrosion products and, in addition, the borated reactor coolant converts the anion resin to the borate form. The resin

bed is designed to reduce the concentration of ionic isotopes in the purification stream (except for cesium, tritium, and molybdenum) by a minimum factor of 10.

Each demineralizer is sized to accommodate the maximum letdown flow. One demineralizer serves as a standby unit for use when the operating demineralizer becomes exhausted during operation.

The demineralizer vessels are fabricated of austenitic stainless steel and are provided with suitable connections to facilitate resin replacement. The vessels are equipped with a resin retention screen. Each demineralizer has sufficient capacity to operate for one core cycle with 1% defective fuel rods.

9.1.2.6.5 Deborating Demineralizers

When required, two anion demineralizers remove boric acid from the reactor coolant system fluid. The demineralizers are intended for use near the end of a core cycle when boron concentrations are low, but can be used at any time if required. Hydroxyl-based ion-exchange resin is used to reduce reactor coolant system boron concentration by releasing a hydroxyl ion when a borate ion is adsorbed.

When the resin is saturated, it is flushed to the spent-resin storage tank and new resin is added.

Each demineralizer is sized to remove that quantity of boric acid from the reactor coolant system necessary to maintain full-power operation near the end of core life without the use of the boron recovery system.

9.1.2.6.6 Cation-Bed Demineralizer

A demineralizer using a flushable cation resin bed in the hydrogen form is located downstream from the mixed-bed demineralizers and is used when required to control the concentration of Li^7 that builds up in the coolant from the B^{10} (n, α) Li^7 reaction. The demineralizer also has sufficient capacity to maintain the cesium-137 concentration in the coolant below 1.0 μCi/cc with 1% defective fuel. The demineralizer is used to control cesium as necessary during operation. The demineralizer vessel is fabricated of austenitic stainless steel and is provided with suitable connections to facilitate resin replacement when required. The vessel is equipped with a resin retention screen.

9.1.2.6.7 Reactor Coolant Filter

The filter collects resin fines and particulates using a filter element with a particle retention of 25 μm or less if such fines should carry over into the letdown stream. The vessel is fabricated of austenitic stainless steel, and is provided with connections for draining and venting. Design flow capacity of the filter is equal to the maximum purification flow rate.

Disposable synthetic filter elements are used. The reactor coolant filter is considered for replacement when there is a high-pressure differential across the filter or when a portable radiation monitor exceeds a dose rate limit.

9.1.2.6.8 Volume Control Tank

The volume control tank is the collecting point in the system for letdown flow, makeup, and chemical additions. It has surge capacity to compensate for changes in reactor coolant volume resulting from power level increases and the deadband in the reactor control temperature instrumentation.

A hydrogen gas overpressure is maintained in the volume control tank to control the hydrogen concentration in the reactor coolant between 5 and 50 cm^3/kg of water at standard temperature and pressure. A spray nozzle is located inside the tank on the inlet line from the reactor coolant filter. This spray nozzle provides liquid-to-gas contact between the incoming liquid and the hydrogen atmosphere in the tank.

A remotely operated vent valve discharging to the vent and drain system permits removal of gaseous fission products, when desired, which are stripped from the reactor coolant at this location. The volume control tank also acts as a head tank for the charging pump suction header. The tank is constructed of austenitic stainless steel.

9.1.2.6.9 Charging Pumps

Three charging pumps inject coolant into the reactor coolant system. These pumps also perform the safety injection function as discussed in Sections 6.1 and 6.2. The pumps are of the single-speed horizontal centrifugal type, and all parts in contact with the reactor coolant are constructed of austenitic stainless steel or other material of adequate corrosion resistance. These pumps have a mechanical seal and auxiliary gland bushing. This arrangement minimizes the possibility of reactor coolant leakage to the outside atmosphere. Pump leakage is collected in the auxiliary building sump for disposal. The pump design prevents lubricating oil from contaminating the charging flow.

Each pump is designed to provide the full charging flow and the reactor coolant pump seal-water supply during normal seal leakage. Each pump is designed to provide rated flow against a pressure equal to the sum of the reactor coolant system safety valve pressure and the piping, valve, and equipment pressure losses at the design charging flows. The capacity of each charging pump permits operation at normal charging line flow with one reactor coolant pump shaft seal operating normally while the other two reactor coolant pumps are operating with significant floating-ring seal flow. The capacity of each pump includes margin for recirculation flow. The recirculation flow is sufficient to protect the pumps when pump discharge valves are closed during testing or when pump discharge flow is low at minimum charging conditions.

9.1.2.6.10 Chemical Mixing Tank

The primary use of the chemical mixing tank is for the preparation of solutions for pH control and oxygen scavenging; it has a capacity more than sufficient to prepare a solution of pH control chemical for the reactor coolant system. It is fabricated of austenitic stainless steel. The capacity of the chemical mixing tank is determined by the quantity of 35% hydrazine solution necessary to increase the concentration in the reactor coolant by 10 ppm. The chemical mixing tank may also be used to add hydrogen peroxide to the reactor coolant. This occurs during refueling outages and is used to solubilize crud for controlled removal.

9.1.2.6.11 Excess Letdown Heat Exchanger

The excess letdown heat exchanger cools reactor coolant letdown if the normal letdown path is blocked. It is designed to cool a letdown flow equal to the nominal injection rate through three reactor coolant pump labyrinth seals. The unit is designed to reduce the letdown stream temperature from the cold-leg temperature to 195°F. The letdown stream flows through the tube side, and component cooling water circulates through the shell side. All surfaces in contact with the reactor coolant are austenitic stainless steel, and the shell is carbon steel. All tube joints are welded. The unit is designed to withstand 12,000 step changes in the tube fluid temperature from 80°F to the cold-leg temperature.

9.1.2.6.12 Seal-Water Heat Exchanger

The seal-water heat exchanger removes heat from three sources: reactor coolant pump seal-water, reactor coolant discharged from the excess letdown heat exchanger, and charging pump recirculation flow. Reactor coolant flows through the tubes, and component cooling water is circulated through the shell side. The tubes are welded to the tubesheet because undesirable leakage could occur in either direction. All surfaces in contact with reactor coolant are austenitic stainless steel, and the shell is carbon steel.

The exchanger is designed to cool the excess letdown flow and the sealwater flow to the temperature normally maintained in the volume control tank if all the reactor coolant pump floating-ring seals are leaking at the maximum design leakage rate.

9.1.2.6.13 Seal-Water Filter

The filter collects particulates using a filter element with a particle retention of 25 µm or less from the reactor coolant pump seal-water return from the excess letdown heat exchanger flow. The filter is designed to pass the sum of the excess letdown flow and the maximum design leakage from the reactor coolant pump floating-ring seals. The vessel is constructed of austenitic stainless steel and is provided with connections for draining and venting. Disposable synthetic filter elements are used.

9.1.2.6.14 Boric Acid Filter

The boric acid filter collects particulates using a filter element with a particle retention of 25 µm or less from the boric acid solution being pumped to the charging pump suction line or boric acid blender. The filter is designed to pass the design flow of two boric acid pumps operating simultaneously. The vessel is constructed of austenitic stainless steel, and the filter elements are disposable synthetic cartridges. Provisions are available for venting and draining the filter.

9.1.2.6.15 Boric Acid Storage Tanks

Boric acid solution mixed in the batching tank is stored in three electrically heated boric acid storage tanks shared by both units. One tank is normally aligned for each unit and supplies boric acid for reactor coolant makeup. Makeup to the boric acid storage tanks is typically done by a batching process applied to the third tank which is not assigned to either unit. As needed, the aligned tanks may be filled from the third "unaligned" tank in order to maintain an adequate boric acid supply to each unit. The three tanks combined have sufficient boric acid capacity to provide cold shutdown for the two units, each with one control rod assembly completely withdrawn, following a refueling shutdown on both units. Each tank, if maintained above the low-level alarm point, can supply sufficient boration to provide cold shutdown for one unit with a control rod assembly completely withdrawn.

During reactor operation, it is necessary to recirculate the boric acid solution in the boric acid storage tanks and the associated piping in order to prevent localized precipitation of boric acid. Sampling frequency and water chemistry requirements to preclude precipitation are found in Table 9.1-8.

The concentration of boric acid solution in storage is at least 7.0% (but not > 8.5%) by weight. Periodic manual sampling and corrective action, if necessary, ensure that these limits are maintained. As a consequence, measured amounts of boric acid solution can be delivered to the reactor coolant to control the boron concentration. Each boric acid storage tank has an overflow with a water loop seal that is connected to the high level liquid waste tanks. The boric acid storage tanks are constructed of austenitic stainless steel.

9.1.2.6.16 Batching Tank

The batching tank is sized to hold one week's makeup supply of boric acid solution for transfer to the boric acid storage tanks. The basis for makeup is reactor coolant leakage of 0.5 gpm at beginning of core life. A local sampling point is provided for verifying the solution concentration prior to transferring it to the boric acid storage tank or for draining the tank. A tank manway is provided with a removable screen to prevent entry of foreign particles. In addition, the tank is provided with an agitator to improve mixing during batching operations. The tank is constructed of austenitic stainless steel and is not used to handle radioactive substances. The tank is provided with a steam jacket for heating the boric acid solution to ≥128°F.

9.1.2.6.17 Boric Acid Storage Tank Heaters

Two 100%-capacity electric immersion heaters in each boric acid storage tank are designed to maintain the temperature of the boric acid solution at ≥128°F with an ambient air temperature of 40°F, thus ensuring a temperature in excess of the solubility limit (108°F for a 14,858-ppm boron solution). The heaters are sheathed in incoloy.

9.1.2.6.18 Boric Acid Transfer Pumps

Four centrifugal two-speed pumps are used to circulate or transfer the boric acid solution. The pumps circulate the boric acid solution and inject boric acid into the charging pump suction header or furnish boric acid to the boric acid blender. Although one pump normally is used for boric acid batching and transfer for each unit and one for boric acid injection for each unit, either pump may function as standby for the other. The design head of one pump is sufficient, considering line and valve losses, to deliver rated flow to the charging pump suction header when volume control tank pressure is at the maximum operating value. All parts in contact with the solutions are austenitic stainless steel or other suitable corrosion-resistant material.

The boric acid transfer pumps are operated either automatically or manually from the control room. A main control room annuciator alarms when the system is in the nonautomatic control mode. Reactor makeup control operates one of the pumps automatically when the boric acid solution is required for makeup or boration.

9.1.2.6.19 Boric Acid Blender

The boric acid blender promotes thorough mixing of the concentrated boric acid solution and primary-grade water for the reactor coolant makeup circuit.

The blender consists of a conventional pipe fitted with a perforated tube insert. All material is austenitic stainless steel. The blender decreases the pipe length required to homogenize the mixture.

9.1.2.6.20 Electrical Heat Tracing

Electrical heat tracing is installed under the insulation on all pumps, piping, valves, line-mounted instrumentation, and components normally containing a concentrated boric acid solution. The heat tracing is designed to prevent boric acid precipitation due to cooling, by compensating for heat loss.

Exceptions are:

1. Lines that may transport concentrated boric acid but are subsequently flushed with reactor coolant or other liquid of low boric acid concentration during normal operation.
2. The boric acid storage tanks, which are provided with immersion heaters.
3. The batching tank, which is provided with a steam jacket.

Heat tracing tapes are resistant to mechanical, chemical, and heat damage, and are covered by protective and heat-retaining insulation. Duplicate tracing on sections of the chemical and volume control system normally containing boric acid solution provides backup if the operating tracing malfunctions. Monitoring electrical equipment allows functional testing of the heat tracing. The existence of a condition requiring redundant tracing to be operated will be indicated by an alarm in the control room. Circuit test results are documented in appropriate test procedures.

9.1.2.6.21 Valves

Valves that perform a modulating function are equipped with two sets of packing and an intermediate leakoff connection that discharges directly, or via a floor drain, to the vent and drain system. All other valves have stem leakage control. Globe valves are installed with flow over the seat when such an arrangement reduces the possibility of leakage. Basic material of construction is stainless steel for all valves except the batching tank steam jacket valves, which are carbon steel.

Isolation valves are provided at all connections to the reactor coolant system. Connections to the reactor coolant system that pass through the containment are equipped with isolation devices, as described in Section 5.2.

Relief valves are provided for lines and components that might be pressurized above design pressure by improper operation or component malfunction. Pressure relief for the tube side of the regenerative heat exchanger is provided by a spring-loaded check valve around the charging line isolation valve. The valve relieves to the reactor coolant system.

All relief valves used in systems handling radioactive fluids are of the closed bonnet design and are constructed of stainless steel.

9.1.2.6.22 Piping

All chemical and volume control system piping handling radioactive liquid is austenitic stainless steel. All piping joints and connections are welded, except where flanged connections are required to facilitate equipment removal for maintenance and hydrostatic testing. Piping, valves, equipment, and linemounted instrumentation, which normally contain concentrated boric acid solution, are heated by electrical tracing to ensure solubility of the boric acid.

Portions of the stainless steel piping systems may contain stagnant oxygenated borated water during plant operations. Stagnant borated water in these portions may exist for periods of time longer than one week. Piping integrity is verified by periodic inservice inspection.

9.1.3 System Design Evaluation

9.1.3.1 Availability and Reliability

A high degree of functional reliability is ensured in the chemical and volume control system by providing standby components where performance is vital to safety and by ensuring safe

response to the most probable mode of failure. Special provisions include duplicate heat tracing with alarm protection of lines, valves, and components normally containing concentrated boric acid.

The chemical and volume control system has three high-pressure charging pumps, each capable of supplying the required reactor coolant pump seal and makeup flow. The two units' charging systems are cross-connected to allow the use of the opposite unit's charging pumps to bring the disabled unit to cold shutdown during certain emergency conditions. Operation of the manual cross-connect valves is procedurally controlled.

The electrical equipment of the chemical and volume control system for each unit is arranged so that redundant items are powered from two separate independent emergency electrical distribution systems consisting of 4160V and 480V buses (Figure 8.3-1). One charging pump and one boric acid transfer pump are powered from each train of the emergency electrical distribution system. A third charging pump is available which can be powered from either 4160V emergency bus. In case of loss of normal ac power, the emergency buses are automatically powered from the standby emergency diesel generators.

9.1.3.2 **Control of Tritium**

An analysis of the production of tritium in the reactor coolant is presented in Table 9.1-7. Even if all the tritium produced in the reactor coolant is discharged from the plant, the concentration of tritium in the discharge canal would be 4.8×10^{-6} Ci/cm^3 or less than 0.2% of that allowed by 10 CFR 20. This analysis was based in part on 30% of the fission-produced tritium diffusing through the clad. The expected diffusion with zirconium clad is less than 1%.

During normal operation, tritium will be present in the following systems:

1. Reactor coolant system.
2. Chemical and volume control system.
3. Sampling system.
4. Vent and drain system.
5. Liquid waste system.
6. Refueling water storage system.

The distribution of tritium among these systems will be dependent on the operating parameters of the plant.

Essentially all of the tritium is in chemical combination with oxygen as a form of water. Therefore, any leakage of coolant to the containment atmosphere carries tritium in the same proportion as it exists in the coolant. Thus, the level of tritium in the containment atmosphere, when it is sealed from outside air ventilation, is mainly a function of tritium level in the reactor coolant. In addition, it depends on the cooling water temperature at the ventilation cooling coils,

and the presence of leakage other than reactor coolant as a source of moisture in the containment air.

All effluents discharged from the liquid waste system will be sampled and analyzed before release. Tritium releases to the environment resulting from primary system leakage will be accounted for by analysis of the containment atmosphere prior to containment purging and by periodic analysis of the steam generator blowdown.

There are two major considerations with regard to the presence of tritium in the reactor coolant, neither of which is limiting in the operation of the Surry units:

1. Possible station personnel hazard during access to the containment, since leakage of reactor coolant during operation causes an accumulation of tritium in the containment atmosphere.
2. Release of tritium to the environment.

9.1.3.3 Leakage Provisions

All chemical and volume control system valves and piping for radioactive services are designed to permit essentially zero leakage. The components designated for radioactive service are provided with welded connections to prevent leakage. However, flanged connections are provided on each charging pump suction and discharge, on each boric acid pump suction and discharge, on the relief valve inlets and outlets, on three-way valves, and on the flow meters to permit removal for maintenance.

The centrifugal charging pumps are provided with leakoffs which direct leakage to the auxiliary building sump. All valves that are larger than 2-inch and that are designated for radioactive service at an operating fluid temperature above 212°F are provided with a stuffing box and lantern leakoff connections. All control valves are provided with stuffing box and leakoff connections or are totally enclosed, and leakage is essentially zero for these valves.

Diaphragm valves are provided where the operating pressure is 200 psig or below and operating temperature is 200°F or below. Leakage is essentially zero for these valves.

9.1.3.4 Incident Control

The letdown line and the reactor coolant pump seal-water return lines penetrate the reactor containment. The letdown line contains air-operated valves inside the reactor containment and one air-operated valve outside the reactor containment, which is automatically closed by the containment isolation signal.

The reactor coolant pump seal-water return lines contain one motor-operated isolation valve outside the reactor containment, which is automatically closed by the containment isolation signal.

The seal-water injection lines to the reactor coolant pumps and the charging line are inflow lines penetrating the reactor containment. Each line contains two check valves in series inside the

reactor containment to provide isolation of the reactor containment should a break occur in these lines outside the reactor containment.

9.1.3.5 **Malfunction Analysis**

9.1.3.5.1 Malfunction During a Loss-of-Coolant Accident

To evaluate system safety, failures or malfunctions are assumed concurrent with a loss-of-coolant accident (LOCA), and the consequences are analyzed. Proper consideration is given to station safety in the design of the system. Results of this analysis are presented in Table 9.1-9.

If a rupture takes place between a reactor coolant loop and the first isolation valve or check valve, a loss of reactor coolant occurs. The first isolation or check valve is always located as close as possible to the reactor coolant loop pipe. The analysis of a LOCA is discussed in Chapter 14.

If a rupture occurs in the chemical and volume control system outside the containment, or at any point beyond the first check valve or remotely operated isolation valve, actuation of the valve limits the release of coolant and ensures continued functioning of the normal means of heat dissipation from the core. For the general case of a rupture outside the containment, the largest source of radioactive fluid subject to release is the volume control tank. The consequences of such a release are discussed in Chapter 14.

9.1.3.5.2 Boration/Dilution Performance

When the reactor is subcritical during refueling, cold, intermediate or hot shutdown, and approach to criticality, the relative reactivity status is continuously monitored and indicated by BF_3 counters and count rate indicators. Any appreciable increase in the neutron source multiplication, including that caused by the maximum possible initial boron dilution rate of approximately 950 ppm/hr, is slow enough to give ample time to start corrective action to prevent the core from becoming critical. A conservative estimate of the time to criticality in a dilution accident under refueling conditions is 50 minutes. The possibility of dilution during refueling is highly unlikely because of the Technical Specification requirement to lock out the primary grade makeup flow path during refueling and cold shutdown. The maximum dilution rate is based on the abnormal condition of two charging pumps delivering unborated makeup water to the reactor coolant system at a particular time during hot shutdown when the boron concentration is at the maximum value and the water volume in the system is at a minimum.

At least two separate and independent flow paths are available for normal reactor coolant boration, i.e., the charging line or the reactor coolant pump seal labyrinths. The malfunction or failure of either flow path does not result in the inability to borate the reactor coolant system. An alternate flow path is always available for emergency boration of the reactor coolant. As backup to the boration system, the operator can also align the refueling water storage tank outlet to the suction of the charging pumps, if required.

A single malfunction in one of the boron makeup subsystems does not preclude the ability to maintain proper boron concentration in both units simultaneously.

Subsequent to complete loss of seal injection water to the reactor coolant pump seals, low charging pressure in the system header (below a preset value) automatically starts a standby charging pump. Even if the seal-water injection flow is not reestablished, the unit can operate if component cooling water is available, since the thermal barrier cooler cools the reactor coolant flow that passes through the thermal barrier cooler and seal leakoff from the pump volute. How long the unit can operate is determined by monitoring the reactor coolant pump bearing and seal temperatures, to ensure they remain within operating limits (Reference 3).

To ensure an alternate shutdown capability independent of cables, system, or components in the area, a remote monitoring panel which will monitor vital primary parameters and a cross connect between the two units' charging pump discharge lines has been incorporated. Operation of the cross connect is strictly manual. The cross connect is located in the auxiliary building.

9.1.3.5.3 Loss of Boric Acid Tank Concurrent With Loss of Offsite Power

The Surry reactors would not normally be brought to a cold shutdown condition without offsite power, but would remain in the hot standby condition. However, if it became necessary to bring the reactor to a cold shutdown condition in the event of a loss of offsite power, natural circulation and other emergency equipment could be used to do so.

In the event of a complete loss of offsite power and turbine trip, there would be a loss of power to the station auxiliaries, i.e., the reactor coolant pumps, main feedwater pumps, etc. The emergency diesel generators would start automatically to supply plant vital loads. Vital instruments are supplied by buses obtaining power from inverters, which in turn obtain power from the emergency batteries.

The auxiliary feedwater system would start automatically. It consists of two motor-driven auxiliary feedwater pumps that obtain power from the emergency diesels, and one steam-driven auxiliary feedwater pump that utilizes steam from the secondary system and exhausts to the atmosphere. Equipment required to inject boron into the reactor coolant system (the charging pump, and boric acid transfer pump) is supplied by the diesel generator. Feedwater required for cooldown is supplied by the auxiliary feedwater system. Steam would be released to atmosphere via the steam generator atmospheric relief valves, thereby dissipating the reactor heat energy. The air compressor required to ensure the functionality of the atmospheric relief valves is supplied by the diesel generators. Natural circulation could be used to circulate the coolant through the system to effect cooldown, as has been demonstrated by tests on reactors of similar design.

One tank, if maintained above the low-level alarm, can supply sufficient boric acid to provide cold shutdown for one unit with a control rod assembly completely withdrawn (Section 9.1.2.6.15). Similarly, the quantity of boric acid would be sufficient for the condition postulated, where the reactor is to be shut down after power operation shortly after refueling.

9.1.3.6 Galvanic Corrosion

The only types of materials that are in contact with each other in borated water are stainless steels, Inconel, and Stellite or other corrosion and wear resistant valve materials, and zirconium alloy (e.g., Zircaloy or ZIRLO) fuel element cladding. These materials have been shown to exhibit only an insignificant degree of galvanic corrosion when coupled to each other.

For example, the galvanic corrosion of Inconel versus 304 stainless steel resulting from high-temperature tests (575°F) in lithiated, boric acid solution was found to be less than -20.9 mg/dm^2 for the test period of 9 days. Further galvanic corrosion would be trivial, since the cell currents at the conclusion of the tests were approaching polarization. Zircaloy versus stainless steel Type 304 was shown to polarize at 180°F with lithiated, boric acid solution in less than 8 days, with a total galvanic attack of -3.0 mg/dm^2. Stellite versus stainless steel Type 304 was polarized in 7 days at 575°F in lithiated boric acid solution, with a total galvanic corrosion of -0.97 mg/dm^2 (Reference 1).

These tests show that the effects of galvanic corrosion are insignificant in systems containing borated water.

9.1.4 Minimum Operating Conditions

The minimum operating conditions for the chemical and volume control system are contained in the Technical Specifications.

9.1.5 Tests and Inspections

Periodic testing, calibration, and inspection are conducted on the various instrument channels to ensure proper instrument response and operation of alarm functions. The minimum frequencies for testing, calibrating, and inspection are contained in the Technical Specifications.

Most components are in use regularly during power operation; therefore, assurance of the availability and performance of the system and equipment is provided.

9.1 REFERENCES

1. D. G. Sammarone, *The Galvanic Behavior of Materials in Reactor Coolants*, WCAP 1844, 1961.
2. S. L. Davidson and T. L. Ryan, *VANTAGE+ Fuel Assembly Reference Core Report*, WCAP-12610-P-A (Proprietary), April 1995.
3. Westinghouse Electric Company, *NSAL 99-005: Reactor Coolant Pump Operation During a Loss of Seal Injection,* June 1, 1999.

9.1 REFERENCE DRAWINGS

The list of Station Drawings below is provided for information only. The referenced drawings are not part of the UFSAR. This is not intended to be a complete listing of all Station Drawings referenced from this section of the UFSAR. The contents of Station Drawings are controlled by station procedure.

	Drawing Number	Description
1.	11448-FM-088A	Flow/Valve Operating Numbers Diagram: Chemical and Volume Control System, Unit 1
	11548-FM-088A	Flow/Valve Operating Numbers Diagram: Chemical and Volume Control System, Unit 2
2.	11448-FM-088B	Flow/Valve Operating Numbers Diagram: Chemical and Volume Control System, Unit 1
	11548-FM-088B	Flow/Valve Operating Numbers Diagram: Chemical and Volume Control System, Unit 2
3.	11448-FM-088C	Flow/Valve Operating Numbers Diagram: Chemical and Volume Control System, Unit 1
	11548-FM-088C	Flow/Valve Operating Numbers Diagram: Chemical and Volume Control System, Unit 2

Table 9.1-1
CHEMICAL AND VOLUME CONTROL SYSTEM CODE REQUIREMENTS

Regenerative heat exchanger	ASME III[a], Class C
Nonregenerative heat exchanger	ASME III, Class C, Tube Side; ASME VIII, Shell Side
Mixed-bed demineralizers	ASME III, Class C
Reactor coolant filter	ASME III, Class C
Volume control tank	ASME III, Class C
Seal-water heat exchanger	ASME III, Class C, Tube Side; ASME VIII, Shell Side
Excess letdown heat exchanger	ASME III, Class C, Tube Side[b], ASME VIII, Shell Side
Chemical mixing tank	ASME VIII
Cation-bed demineralizer	ASME III, Class C
Boric acid storage tanks	ASME VIII
Deborating demineralizer	ASME III, Class C
Batching tank	ASME VIII
Seal-water injection filters	ASME III, Class C
Pumps	None
Boric acid filter	ASME VIII DIV I
Seal-water filter	ASME III, Class C
Resin fill tank	None
Piping and valves	USAS B31.1[c] and USAS B16.5[d]

a. ASME III - American Society of Mechanical Engineers, Boiler and Pressure Vessel Code, Section III, Nuclear Vessels.

b. ASME VIII - American Society of Mechanical Engineers, Boiler and Pressure Vessel Code, Section VIII - Division 1, Rules for Construction of Pressure Vessels Division 1 was used to fabricate tube bundle for 01-CH-E-4.

c. USAS B31.1 - Code for Pressure Piping, American Standards Association (supplemented by special nuclear cases where applicable).

d. USAS B16.5 - Code for Steel Pipe Flanges and Flanged Fittings, American Standards Association.

Table 9.1-2
CHEMICAL AND VOLUME CONTROL SYSTEM PRINCIPAL COMPONENT DATA SUMMARY

	Quantity per Unit	Heat Transfer Btu/hr	Design Letdown Flow. lb/hr	Maximum Letdown ΔT °F	Design Pressure, psig shell/tube	Design Temperature, °F shell/tube
I. Heat Exchangers						
Regenerative	1	8.3×10^6 (norm)	29,826	257.4	2485/2735	650/650
		15.4×10^6 (max)	59,700	236.4	2485/2735	650/650
Nonregenerative	1	16.0×10^6	59,700	265	150/600	250/400
Seal water	1	1.5×10^6	111,600	14	150/150	250/250
Excess letdown	1	3.1×10^6	7, 500	400.4	150/2485	250/650

	Quantity per Unit	Type	Capacity, gpm	Head, ft or psig	Design Pressure, psig	Design Temperature, °F
II. Pumps						
Charging	3	Centrifugal	150[a]	5800 ft[a]	2735	250
Boric acid transfer	4[b]	Centrifugal	75	235 ft	150	250

a. Charging mode

b. Shared by both Units.

Table 9.1-2 (continued)

CHEMICAL AND VOLUME CONTROL SYSTEM PRINCIPAL COMPONENT DATA SUMMARY

	Quantity per Unit	Type	Volume	Design Pressure. psig	Design Temperature °F
III. Tanks					
Volume control	1	Vertical	300 ft^3	75 interior/ 15 exterior	250
Chemical mixing	1	Vertical	5 gal	150	250
Boric acid	3[c]	Vertical	7500 gal	Atmospheric	250
Batching	1[c]	Jacket Stm, bottom	800 gal	Atmospheric	250

c. Shared by both Units.

	Quantity per Unit	Type	Resin Volume, ft^3	Design Flow, gpm	Design Pressure, psig	Design Temperature, °F
IV. Demineralizers						
Mixed-bed	2	Flushable	30	120	200	250
Cation	1	Flushable	20	60	200	250
De-borating	2	Fixed	43	120	200	250

Table 9.1-2 (continued)

CHEMICAL AND VOLUME CONTROL SYSTEM PRINCIPAL COMPONENT DATA SUMMARY

	Quantity per Unit	Design Flow, gpm	Design Temperature °F	Design Pressure, psig	Particle Retention (with 98% efficiency), µm
V. Filters					
Boric acid	1	320	250	200	≤25
Reactor coolant	1	320	250	200	≤25
Seal water	1	320	250	200	≤25
Seal water injection	2	80	200	2735	≤5
Letdown	1	325	250	200	

Table 9.1-3
CHEMICAL AND VOLUME CONTROL SYSTEM PERFORMANCE REQUIREMENTS[a]

Station design life	60 years[b]
Nominal pump seal-water supply flow rate (to reactor coolant pumps)	24 gpm (8 gal/pump)
Nominal pump seal-water return flow rate (from reactor coolant pumps)	9 gpm (3 gal/pump)
Normal letdown flow rate	60 to 120 gpm
Maximum design letdown flow rate	120 gpm
Normal charging pump flow rate (one pump including 60-gpm recirculation flow)	129 to 189 gpm
Normal charging line flow	45 to 105 gpm
Maximum rate of boration using 7% boric acid from the BASTs with one transfer and one charging pump, from initial reactor coolant system concentration of 0 ppm	14.1 ppm/min
Equivalent cooldown rate during the above rate of boration	4.9°F/min
Maximum rate of boron dilution with maximum design letdown flow rate at hot shutdown from initial reactor coolant system concentration of 2500 ppm	950 ppm/hr
Maximum rate of boration using 2400 ppm refueling water assuming an end of life reactor coolant system concentration of 0 ppm	5.5 ppm/min
Equivalent end of cycle cooldown rate during the maximum rate of boration	1.9°F/min
Temperature of reactor coolant entering system at full power with normal letdown and charging line flow rates	540.4°F
Temperature of reactor coolant return to reactor coolant system at full power	488°F
Normal system discharge temperature to boron recovery system	115°F
Approximate amount of 7.0% boric acid solution required to meet cold shutdown conditions	6000 gal[c]

a. Volumetric flow rates in gpm are based on 130°F and 2350 psig.

b. Original design life was 40 years. The evaluation and management of aging of components in this system demonstrate the acceptability of the design life of 60 years.

c. Range of boric acid concentration is 7.0 to 8.5%. The amount of solution is determined from the lower limit of concentration in order to obtain the more conservative figure.

Table 9.1-4
FISSION PRODUCT CONCENTRATIONS IN THE REACTOR COOLANT WITH SMALL CLADDING DEFECTS IN ONE PERCENT OF THE FUEL RODS [a]

Fission Product Isotope	Reactor Coolant Activity Concentration, µCi/cc at 560°F
A. Noble gases	
Kr-85	2.42 (peak)
Kr-85m	1.14
Kr-87	0.78
Kr-88	2.81
Xe-133	1.88×10^{2}
Xe-133m	1.87
Xe-135	5.20
Xe-135m	1.30×10^{-1}
Xe-138	3.50×10^{-1}
Subtotal	202.7
B. Nongaseous	
Br-84	3.0×10^{-2}
Rb-88	2.82
Rb-89	6.5×10^{-2}
Sr-89	2.8×10^{-3}
Sr-90	8.5×10^{-5}
Y-90	1.0×10^{-4}
Sr-91	1.3×10^{-3}
Y-91	4.9×10^{-4}
Sr-92	5.2×10^{-4}
Y-92	5.3×10^{-4}
Zr-95	5.4×10^{-4}
Nb-95	5.4×10^{-4}
Mo-99	2.23
Te-129	4.6×10^{-3}
I-129	2.4×10^{-8}
I-131	1.68
Te-132	1.86×10^{-1}
I-132	6.25×10^{-1}

a. Assumptions are stated in Table 9.1-5.

Table 9.1-4 (continued)
FISSION PRODUCT CONCENTRATIONS IN THE REACTOR COOLANT WITH SMALL CLADDING DEFECTS IN ONE PERCENT OF THE FUEL RODS [a]

Fission Product Isotope	Reactor Coolant Activity Concentration, μCi/cc at 560°F
I-133	2.73
Te-134	2.14×10^{-2}
I-134	3.8×10^{-1}
I-135	1.43
Cs-134	1.76×10^{-1}
Cs-136	2.6×10^{-2}
Cs-137	9.75×10^{-1}
Cs-138	4.58×10^{-2}
Ba-140	1.6×10^{-3}
La-140	6.2×10^{-4}
Ce-144	2.1×10^{-4}
Pr-144	2.3×10^{-4}
Subtotal	13.43
Total	216.13

Table 9.1-5
PARAMETERS USED IN THE CALCULATION OF REACTOR COOLANT FISSION PRODUCT ACTIVITIES

Core thermal power, maximum expected rating	2546 MWt
Fraction of fuel containing clad defects	0.01
Reactor coolant system liquid volume (including pressurizer at normal level)	9235 ft^3
Reactor coolant average temperature	560°F
Letdown purification flow rate (normal)	60 gpm
Effective cation demineralizer flow	6 gpm
Volume control tank volume	300 ft^3
Vapor	180
Liquid	120
Fission product escape rate coefficients, sec^{-1}	
Noble gas isotopes	6.5×10^{-8}
Br, I, and Cs isotopes	1.3×10^{-8}
Te isotopes	1.0×10^{-9}
Mo isotopes	2.0×10^{-9}
Sr and Ba isotopes	1.0×10^{-11}
Y, La, Ce, and Pr isotopes	1.6×10^{-12}
Mixed-bed demineralizer decontamination factors	
Noble gases and Cs-134, 136, 137, Y-90, and Mo-99	1.0 DF
All other isotopes (except tritium)	10.0 DF
Cation-bed demineralizer decontamination factor for Cs-134, 136, 137, Y-90, and Mo-99	10.0
Initial boron concentration (equilibrium cycle, hot full power)	1000 ppm
Boron dilution rate	3.46 ppm per full-power day

Table 9.1-5 (continued)
PARAMETERS USED IN THE CALCULATION OF REACTOR COOLANT FISSION PRODUCT ACTIVITIES

Volume control tank noble gas stripping fraction (closed system)

Isotope	Stripping Fraction
Kr-85	2.3×10^{-5}
Kr-85m	2.7×10^{-1}
Kr-87	6.0×10^{-1}
Kr-88	4.3×10^{-1}
Xe-133	1.6×10^{-2}
Xe-133m	3.7×10^{-2}
Xe-135	1.8×10^{-1}
Xe-135m	8.0×10^{-1}
Xe-138	1.0

Table 9.1-6
MAXIMUM VOLUME CONTROL TANK NOBLE GAS CONCENTRATION IN VAPOR PHASE WITH SMALL CLADDING DEFECTS IN ONE PERCENT OF THE FUEL RODS

Isotope	Vapor Phase Activity Concentration µCi/cc
Kr-85	66.9
Kr-85m	18.1
Kr-87	3.0
Kr-88	32.5
Xe-133	3464.2
Xe-133m	33.8
Xe-135	80.6
Xe-135m	0.004
Xe-138	0.005

Table 9.1-7
TRITIUM SOURCES IN REACTOR COOLANT OPERATION

	Released to the Coolant (Ci/ yr)		
Tritium Source[a]	Total Produced	Design Value	Expected value
Ternary fissions	7850	2355	78.5
Burnable poison rods[b] (initial cycle)	350	105	105
Control rods	0	0	0
Soluble poison boron			
Initial cycle[c]	270	270	270
Equilibrium cycle[d]	380	380	380
Li-7 reaction	9.2	9.2	9.2
Li-6 reaction	4.6	4.6	4.6
Deuterium reaction	1	1	1
Totals, initial cycle	8490	2745	468
Totals, equilibrium cycle	8250	2750	473

a. 2546 MWt at 0.8 load factor.

b. Weight of $B_2 0_3$ = 85# (B^{10} 5.23#).

c. Initial boron (hot, full-power, equilibrium xenon) = 700 ppm.

d. Initial boron (hot, full-power, equilibrium xenon) = 1000 ppm.

Table 9.1-8
BORIC ACID STORAGE TANK WATER CHEMISTRY

Chemistry Parameter	Requirement	Sampling Frequency
B	7.0 - 8.5% boric acid	Biweekly
$C1^-$	≤ 0.15 ppm	Monthly
F^-	≤ 0.250 ppm	Monthly

Note: Makeup water is of primary grade.

Table 9.1-9
CONSEQUENCES OF FAILURES OR MALFUNCTIONS OF THE CHEMICAL AND VOLUME CONTROL SYSTEM WITHIN THE REACTOR CONTAINMENT

Component	Failure	Comments and Consequences
Letdown line	Rupture in the line inside the reactor containment	The remote air-operated valve located near the main coolant loop is closed on low pressurizer level is to prevent supplementary loss of coolant through the letdown line rupture. The containment isolation valve in the letdown line outside the reactor containment is automatically closed by the containment isolation signal initiated by the concurrent loss- of- coolant accident. The closure of that valve prevents any leakage of the reactor containment atmosphere outside the reactor containment.
Charging line	Rupture in the line inside the reactor containment	The check valve located near the main coolant loop prevents supplementary loss of coolant through the line rupture. The air operated valve located upstream of the check valve in the defective line can be remote-manually closed to isolate the reactor coolant system from the rupture. The check valve located at the boundary of the reactor containment prevents any leakage of the reactor containment atmosphere outside the reactor containment.
Seal-water return line	Rupture in the line inside the reactor containment	The motor-operated isolation valve located outside the containment is manually closed or is automatically closed by the containment isolation signal initiated by the concurrent loss of-coolant accident. The closure of that valve prevents any leakage of the reactor containment atmosphere outside the reactor containment.

Figure 9.1-1 (SHEET 1 OF 2)
CHEMICAL AND VOLUME CONTROL SYSTEM

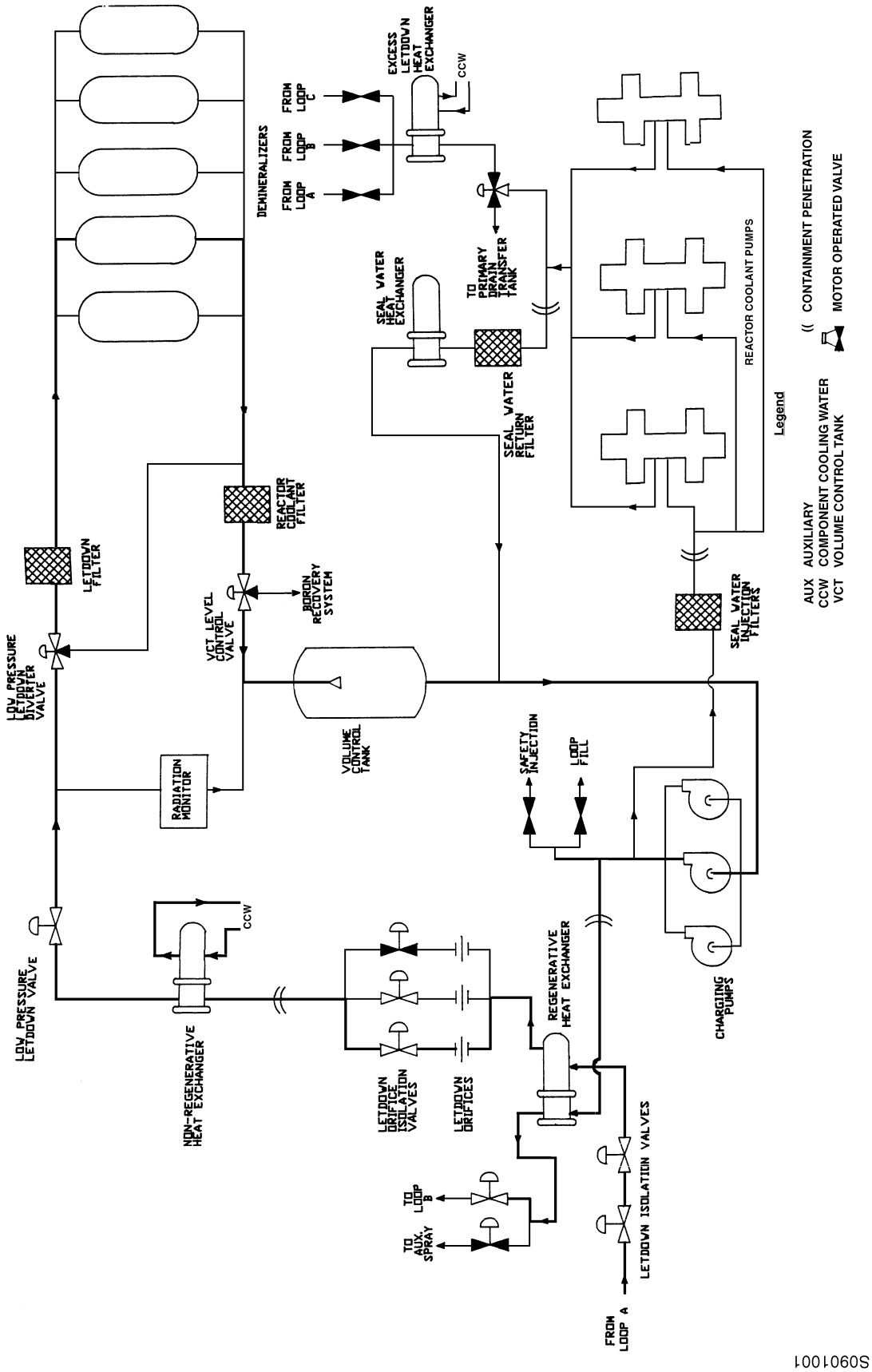

Figure 9.1-1 (SHEET 2 OF 2)
CHEMICAL AND VOLUME CONTROL SYSTEM

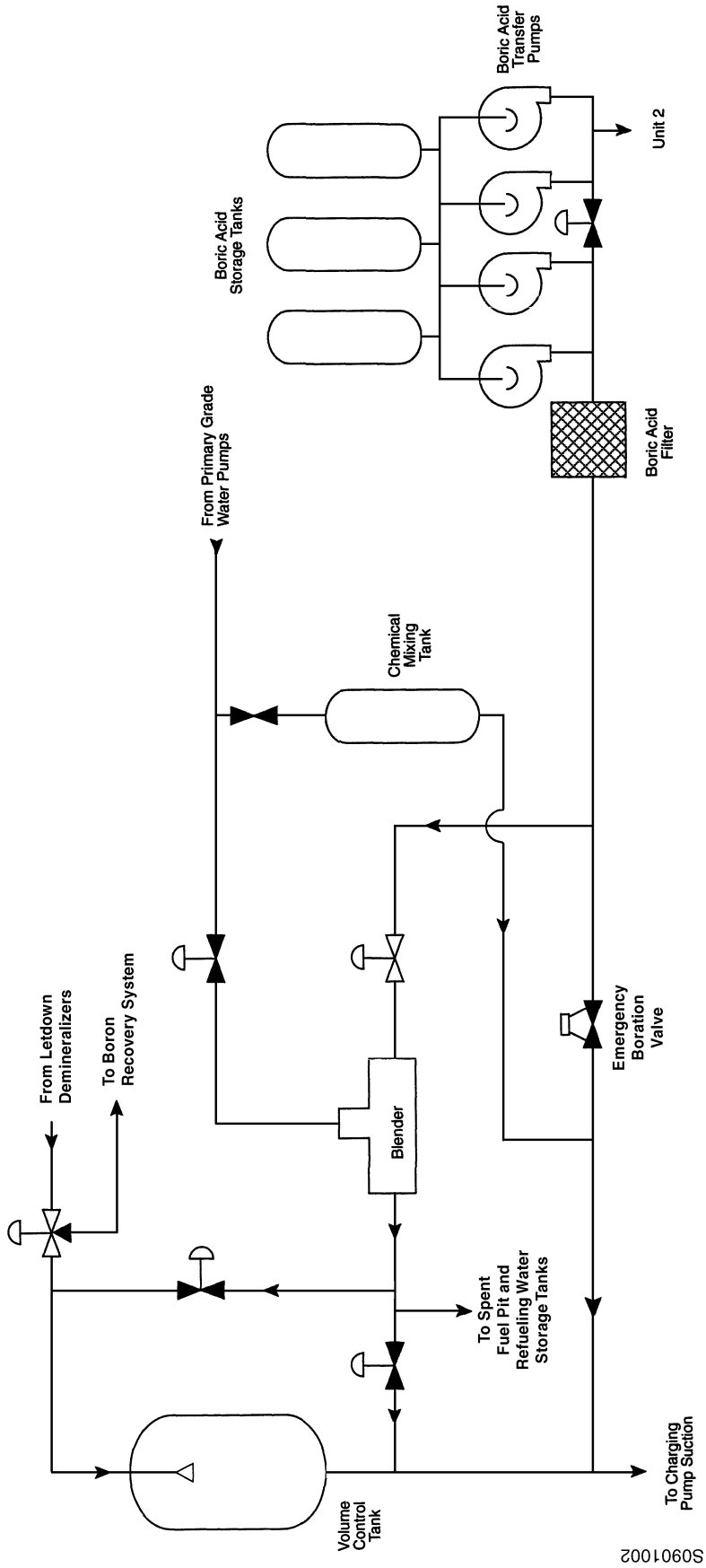

Intentionally Blank

9.2 BORON RECOVERY SYSTEM

The boron recovery system, shown in Figure 9.2-1 and Reference Drawings 1, 2, 3 and 4, is a common system serving both units. The system degasifies and stores borated radioactive water letdown by the chemical and volume control system (Section 9.1) to be processed as liquid waste for disposal. The boron recovery system is designed for liquid samples to be taken as appropriate for processing.

The original boron recovery system was designed to process letdown water by evaporators, filters, and demineralizers. This system was capable of producing both primary-grade water and a concentrated boric acid suitable for recycling within the chemical and volume control system. The original boron recovery evaporator and its associated filters and demineralizers are installed in the plant, but they are no longer used to process letdown water.

A review of the effects of the power uprate to a core power of 2546 MWt was conducted and the boron recovery system was found to be adequate.

9.2.1 Design Bases

The original boron recovery system capacity was sized to accommodate the coolant letdown flow produced by two cold shutdowns from full power in one unit plus one cold shutdown from full power in the second unit in a 7-day period. These shutdowns are assumed to occur at that point in core life when the operating boron concentration in the first unit is 100 ppm and the boron concentration in the second unit is 1 month out of phase. The system influent results from shutdown boration bleed, draining one reactor coolant loop for maintenance work, system expansion during heat-up, and dilution bleed to operating boron concentration on start-up. The boron recovery tanks are assumed to be 10% full at the time of a cold shutdown, and the boron evaporators 75% available at rated capacity during the period.

The original boron recovery system was sized to accommodate letdown flow due to daily load following and weekend load reductions on both units to nearly the end of core life with 75% evaporator availability with minimum use of boron recovery tank capacity. The daily load-follow cycle basis consists of 12 hours at full power, a uniform 3-hour ramp reduction to 50% power, 6 hours at 50% power, and a uniform 3-hour ramp increase to full power.

The boron recovery system was modified to allow letdown water processing for disposal at the Radwaste Facility. This provides an additional 120,000-gallon surge capacity and a process rate of 25 gpm.

The system is capable of removing gases from both units simultaneously at the maximum letdown flow rate.

The boron evaporators are capable of processing the average letdown rate of both units producing a distillate with boron content not exceeding 10 ppm boron and concentrated bottoms

at 12% boric acid. Although the boron evaporators are still physically installed in the plant, they are no longer used to process letdown water.

The primary drain tank, gas stripper, gas stripper overhead condenser, primary drain tank vent chiller condenser, overhead gas compressors, and gas stripper surge tank in the boron recovery system are designed as Class I components.

Piping in the boron recovery system is type 304 stainless steel and Incoloy 825. The Incoloy 825, which is used in those parts of the system associated with the processing of liquid waste or the concentration of boric acid, is resistant to corrosive attack by the solutions concentrated in the boron recovery system. All piping joints and connections are welded except where flanged connections are required to facilitate equipment removal for maintenance.

All globe valves handling radioactive gas are packless, diaphragm valves. All valves handling primary-grade water or radioactive fluid are stainless steel or Incoloy 825.

All liquid lines, equipment, and accessories containing concentrated boric acid (6% by weight boric acid or greater) are electrically heat-traced with dual circuits to prevent crystallization of boric acid. The boron recovery tanks and primary-grade water tanks are heated by steam. The evaporator bottoms tank is maintained, when in operation, at 150°F minimum by dual electric heaters.

The design data for the boron recovery system components are given in Table 9.2-1.

9.2.2 Description

The boron recovery system is illustrated in Figure 9.2-1 and Reference Drawings 1, 2, 3, and 4. Reactor coolant letdown, with entrained hydrogen and fission gases, enters the boron recovery system via the vent and drain system (Section 9.7). This liquid is pumped under automatic level control from the primary drain tank to the gas stripper, stripped of dissolved gases, and, if necessary, passed through ion exchangers for the removal of soluble fission and corrosion products. After subsequent filtration to remove additional particulate materials, the liquid is held up in the three boron recovery tanks for processing by the liquid waste system. Noncondensable gases removed in the gas stripper are taken off the gas stripper overhead condenser and discharged into the gas stripper surge tank by the overhead gas compressors. The surge tank discharges to the gaseous waste disposal system (Section 11.2.5); however, the capability exist to discharge to the volume control tank to return the hydrogen and radioactive gases to the reactor coolant system (Chapter 4). The surge tank contains sufficient gas to provide a cover gas for the gas stripper to prevent drawing in air, which could form a combustible mixture when the stripper is shut down.

The boron recovery system is designed so that operation of the primary drain tank and gas stripper is automatic when all system control setpoints are established. If used, operation of the evaporators is automatic upon cycle initiation from the control room.

Flanged connections have been provided on the boron recovery system next to the boron recovery tanks to enable the removal of radioactive gases and fluids to external process systems without having to enter high-radiation areas. The connections are provided with isolation valves, with reach rods also provided as needed. The valves and handwheels are so located as to permit access after an accident with reduced radiation exposure to personnel.

9.2.3 Design Evaluation

The design capacity of the gas stripper is 240 gpm, which corresponds to the maximum instantaneous letdown rate of both units. The stripper is controlled automatically at any letdown rate up to its maximum, with no operator action.

The boron recovery tanks, when 10% full, have an additional capacity of approximately 340,000 gallons and the Radwaste Facility has a surge capacity of approximately 120,000 gallons. During 7 days of operation at 75% availability, the radwaste liquid waste system can process approximately 190,000 gallons. This provides a total capability of approximately 650,000 gallons of letdown that can be stored or processed during any 7-day period. This capability is in excess of the estimated 450,000 gallons produced by three cold shutdowns.

9.2.3.1 System Reliability

Duplicate, full-capacity pumps and compressors are provided for all equipment except the boron evaporator recirculation pumps, evaporator bottoms tank recirculation pump, waste bottoms pump and the boron evaporator bottoms coolant pump. The primary-grade water pumps, primary drain tank pumps, gas stripper pumps, and gas stripper overhead compressor are provided with automatic controls to start the standby pump if the normal pump fails. The controls of all duplicate pumps are designed to permit alternate duty to equalize operating hours.

The components of this system listed in Section 9.2.1 are designed as Seismic Category I to resist earthquakes and are protected from possible tornado missiles by concrete walls or ceilings.

9.2.3.2 Malfunction Analysis

A failure analysis of boron recovery system components is present in Table 9.2-2.

9.2.4 Tests And Inspections

Tests, calibrations, and checks are periodically conducted on the various instrument channels to ensure proper instrument response and operation of alarm functions.

Standby pumps are switched on a periodic basis, and continuously running equipment is inspected periodically to ensure availability. Routine inspections are performed on this system in accordance with maintenance procedures to ensure that standby equipment will perform as required.

9.2 REFERENCE DRAWINGS

The list of Station Drawings below is provided for information only. The referenced drawings are not part of the UFSAR. This is not intended to be a complete listing of all Station Drawings referenced from this section of the UFSAR. The contents of Station Drawings are controlled by station procedure.

	Drawing Number	Description
1.	11448-FM-079A	Flow/Valve Operating Numbers Diagram: Boron Recovery System, Unit 1
2.	11448-FM-079B	Flow/Valve Operating Numbers Diagram: Boron Recovery System, Unit 1
3.	11448-FM-079C	Flow/Valve Operating Numbers Diagram: Boron Recovery System, Unit 1
4.	11448-FM-079D	Flow/Valve Operating Numbers Diagram: Boron Recovery System, Unit 1

Table 9.2-1
BORON RECOVERY SYSTEM COMPONENT DESIGN DATA

Primary Drain Tank		
Number	1	
Capacity	5000 gal	
Design pressure	30 psig	
Design temperature	240°F	
Operating pressure	2 psig	
Operating temperature	125°F	
Material	SS 304	
Design code	ASME III C	
Gas Stripper		
Number	1	
Capacity	1248 gal	
Design pressure	50 psig	
Design temperature	300°F	
Operating pressure	2 psig	
Operating temperature	219°F	
Material	SS 316L	
Design code	ASME III C	
Boron Recovery Tanks		
Number	3 (one per unit)	
Capacity	127,000 gal	
Design pressure	0.5 psig	
Design temperature	180°F	
Operating pressure	Atmospheric	
Operating temperature	130°F	
Material	SS 304L	
Design code	API-650 [a]	
Boron Evaporators	"A" System	"B" System [b]
Number	1	1
Capacity, each	2900 gal	3130 gal
Design pressure	100 psig	100 psig
Design temperature	338°F	350°F
Operating pressure	15 psig	15 psig
Operating temperature	260°F	250°F

a. In addition to the API-650 Code, the construction process incorporated the requirements of ASME Code Section III C for welding, welding procedure qualification, weld joint efficiency, and weld inspection.
b. Installed but not used.

Table 9.2-1 (continued)
BORON RECOVERY SYSTEM COMPONENT DESIGN DATA

Boron Evaporators (continued)	"A" System	"B" System [b]
Material		
Bottoms	Stainless steel	Incoloy 825
Tower	Type 316L	SS 316
Design code	ASME IIIC	ASME VIII, Division I
Primary-Water Tanks		
Number	2	
Capacity, each	180,000 gal	
Design pressure	0.5 psig	
Design temperature	140°F	
Operating pressure	Atmospheric	
Operating temperature	125°F	
Material	SS 304L	
Design code	API-650 [a]	
Evaporator Bottoms Tank		
Number	1	
Capacity	4000 gal	
Design pressure	25 psig	
Design temperature	200°F	
Operating pressure	Atmospheric	
Operating temperature	160°F	
Material	SS 316L	
Design code	ASME III C	
Distillate Accumulators		
Number	2	
Capacity, each	550 gal	
Design pressure	100 psig	
Design temperature	338°F	
Operating pressure	15 psig	
Operating temperature	250°F	
Material	SS 304	
Design code	ASME III C	
Gas Stripper Surge Tank		
Number	1	
Capacity	550 gal	

a. In addition to the API-650 Code, the construction process incorporated the requirements of ASME Code Section III C for welding, welding procedure qualification, weld joint efficiency, and weld inspection.
b. Installed but not used.

Table 9.2-1 (continued)
BORON RECOVERY SYSTEM COMPONENT DESIGN DATA

Gas Stripper Surge Tank (continued)		
Design pressure	200 psig	
Design temperature	300°F	
Operating pressure	125 psig	
Operating temperature	150°F	
Material	SS 304	
Design code	ASME III C	
Test Tanks		
Number	2	
Capacity, each	30,000 gal	
Design pressure	0.5 psig	
Design temperature	140°F	
Operating pressure	Atmospheric	
Operating temperature	125°F	
Material	SS 304L	
Design code	API-650 [a]	
Stripper Feed Heat Exchangers		
Number	2	
Total duty	18,000,000 Btu/hr (9,000,000 Btu/hr each heater)	
	Shell	Tube
Design pressure	200 psig	150 psig
Design temperature	300°F	200°F
Operating pressure	125 psig	100 psig
Operating temperature, in/out	219/144°F	100/175°F
Material	SS 304	SS 304
Fluid	Letdown	Letdown
Design code	ASME III C	ASME III C
Stripper Feed Steam Heaters		
Number	2	
Total duty	7,800,000 Btu/hr (3,900,000 Btu/hr each heater)	
	Shell	Tube
Design pressure	200 psig	150 psig
Design temperature	388°F	338°F
Operating pressure	100 psig	100 psig
Operating temperature, in/out	338/338°F	175/240°F

a. In addition to the API-650 Code, the construction process incorporated the requirements of ASME Code Section III C for welding, welding procedure qualification, weld joint efficiency, and weld inspection.

Table 9.2-1 (continued)
BORON RECOVERY SYSTEM COMPONENT DESIGN DATA

Stripper Feed Steam Heaters (continued)		
	Shell	Tube
Material	Carbon steel	SS 304
Fluid	Steam	Letdown
Design code	ASME VIII	ASME III C
Stripper Trim Cooler		
Number	1	
Total duty	1,700,000 Btu/hr	
Design pressure	150 psig	200 psig
Design temperature	150°F	220°F
Operating pressure	75 psig	75 psig
Operating temperature, in/out	105/112°F	144/130°F
Material	Carbon steel	SS 304
Fluid	Component cooling water	Letdown
Design code	ASME III C	ASME III C
Stripper Overhead Condenser		
Number	1	
Total duty	2,800,000 Btu/hr	
	Shell	Tube
Design pressure	150 psig	150 psig
Design temperature	300°F	300°F
Operating pressure	2 psig	75 psig
Operating temperature, in/out	219/219°F	105/116°F
Material	SS 304	SS 304
Fluid	Distillate	Component cooling water
Design code	ASME III C	ASME III C
Primary Drain Tank Vent Chiller Condenser		
Number	1	
Total duty	20,000 Btu/hr	
	Shell	Tube
Design pressure	150 psig	150 psig
Design temperature	300°F	300°F
Operating pressure	2 psig	75 psig
Operating temperature, in/out	219/130°F	75/77°F
Material	SS 304	SS 304

Table 9.2-1 (continued)
BORON RECOVERY SYSTEM COMPONENT DESIGN DATA

	Shell	Tube
Primary Drain Tank Vent Chiller Condenser (continued)		
Fluid	Distillate	Chilled component cooling water
Design code	ASME III C	ASME III C
Boron Evaporator Reboilers	"A" System	
Number	1	
Duty	11,100,000 Btu/hr	
	Shell	Tube
Design pressure	200 psig	100 psig
Design temperature	382°F	300°F
Operating pressure	100 psig	25 psig
Operating temperature, in/out	338/338°F	253/263°F
Material	Carbon steel	SS 304
Fluid	Steam	1-12% boric acid
Design code	ASME III	ASME III C
Boron Evaporator Reboilers [b]	"B" System	
Number	1	
Duty	12,330,000 Btu/hr	
Design pressure	200 psig	100 psig
Design temperature	400°F	350°F
Operating pressure	100 psig	22 psig
Operating temperature, in/out	338/338°F	253/264°F
Material	Carbon steel	Incoloy 825
Fluid	Steam	1-12% boric acid
Design code	ASME VIII	ASME VIII, 1971
Boron Evaporator Distillate Coolers [b]		
Number	2	
Duty, each	1,150,000 Btu/hr	
	Shell	Tube
Design pressure	100 psig	150 psig
Design temperature	338°F	338°F
Operating pressure	50 psig	75 psig
Operating temperature, in/out	240/125°F	105/139°F
Material	SS 304	SS 304
Fluid	Distillate	Component cooling water
Design code	ASME III C	ASME III C

b. Installed but not used.

Table 9.2-1 (continued)
BORON RECOVERY SYSTEM COMPONENT DESIGN DATA

Boron Evaporator Bottoms Cooler [b]		
Number	1	
Total duty	950,000 Btu/hr	
	Shell	Tube
Design pressure	150 psig	150 psig
Design temperature	300°F	300°F
Operating pressure	85 psig	45 psig
Operating temperature, in/out	150/170°F	150/160°F
Material	Carbon steel	SS 304
Fluid	Component cooling water	12% boric acid
Design code	ASME III C	ASME III C
Boron Recovery Tank Heaters		
Number	3	
Duty, each	670,000 Btu/hr	
	Shell	Tube
Design pressure	200 psig	200 psig
Design temperature	388°F	388°F
Operating pressure	100 psig	30 psig
Operating temperature, in/out	338/338°F	40/250°F
Material	Carbon steel	SS 304
Fluid	Steam	Letdown
Design code	ASME VIII	ASME III C
Primary-Water Tank Heaters		
Number	2	
Duty, each	670,000 Btu/hr	
	Shell	Tube
Design pressure	200 psig	200 psig
Design temperature	388°F	388°F
Operating pressure	100 psig	30 psig
Operating temperature, in/out	338/338°F	40/250°F
Material	Carbon steel	SS 304
Fluid	Steam	Water
Design code	ASME VIII	ASME III C
Primary-Drain Tank Pumps		
Number	2 (one required)	
Type	Horizontal centrifugal	
Motor horsepower	20 hp	

b. Installed but not used.

Table 9.2-1 (continued)
BORON RECOVERY SYSTEM COMPONENT DESIGN DATA

Primary-Drain Tank Pumps (continued)	
Seal type	Canned pump
Capacity, each	240 gpm
Head at rated capacity	222 ft
Design pressure	150 psig
Materials	
Pump casing	SS 316
Shaft	SS 316
Impeller	SS 316
Gas Stripper Circulating Pumps	
Number	2 (one required)
Type	Horizontal centrifugal
Motor horsepower	30 hp
Seal type	Mechanical seal with backup breakdown section
Capacity, each	240 gpm
Head at rated capacity	250 ft
Design pressure	200 psig
Materials	
Pump casing	SS 316
Shaft	SAE 4140
Impeller	SS 316
Boron Evaporator Feed Pumps	
Number	2 (one required)
Type	Horizontal centrifugal
Motor horsepower	10 hp
Seal type	Mechanical seal with backup breakdown section
Capacity, each	150 gpm
Head at rated capacity	117 ft
Design pressure	225 psig
Materials	
Pump casing	SS 316
Shaft	SAE 4140
Impeller	SS 316
Boron Evaporator Circulating Pumps [b]	
Number	2
Type	Horizontal centrifugal
Motor horsepower	50 hp

b. Installed but not used.

Table 9.2-1 (continued)
BORON RECOVERY SYSTEM COMPONENT DESIGN DATA

Boron Evaporator Circulating Pumps [b] (continued)	
Seal type	Double mechanical
Capacity, each	2200 gpm
Head at rated capacity	60 ft
Design pressure	230 psig
Materials	
Pump casing	SA 296, Gr. CN-7M
Shaft	SAE 4140
Impeller	SA 266, Gr. CN-7M
Boron Evaporator Bottoms Pumps [b]	
Number	2 (one required)
Type	Horizontal centrifugal
Motor horsepower	1.5 hp
Seal type	Canned pump
Capacity, each	20 gpm
Head at rated capacity	56 ft
Design pressure	150 psig
Materials	
Pump casing	SS 316
Shaft	SS 316
Impeller	SS 316
Boron Evaporator Bottoms Cooler Circulating Pump [b]	
Number	1
Type	Horizontal centrifugal
Motor horsepower	1.5 hp
Seal type	Mechanical
Capacity, each	50 gpm
Head at rated capacity	30 ft
Design pressure	150 psig
Materials	
Pump casing	Cast iron
Shaft	Carbon steel
Impeller	Cast iron
Boron Evaporator Bottoms Tank Circulating Pump [b]	
Number	1
Type	Horizontal centrifugal
Motor horsepower	1.5 hp

b. Installed but not used.

Table 9.2-1 (continued)
BORON RECOVERY SYSTEM COMPONENT DESIGN DATA

Boron Evaporator Bottoms Tank Circulating Pump [b] (continued)	
Seal type	Canned pump
Capacity, each, gpm	50 gpm
Head at rated capacity	52 ft
Design pressure	150 psig
Materials	
Pump casing	SS 316
Shaft	SS 316
Impeller	SS 316
Boron Evaporator Distillate Pumps [b]	
Number	2
Type	Horizontal centrifugal
Motor horsepower	5 hp
Seal type	Mechanical
Capacity, each	22 gpm
Head at rated capacity	140 ft
Design pressure	225 psig
Materials	
Pump casing	SS 316
Shaft	SAE 4140
Impeller	SS 316
Test Tanks Pumps	
Number	2 (one required)
Type	Horizontal centrifugal
Motor horsepower	10 hp
Seal type	Mechanical
Capacity, each	100 gpm
Head at rated capacity	142 ft
Design Pressure	225 psig
Materials	
Pump casing	SS 316
Shaft	SAE 4140
Impeller	SS 316
Primary-Water Supply Pumps	
Number	2 (one required)
Type	Horizontal centrifugal
Motor horsepower	30 hp

b. Installed but not used.

Table 9.2-1 (continued)
BORON RECOVERY SYSTEM COMPONENT DESIGN DATA

Primary-Water Supply Pumps (continued)	
Seal type	Mechanical
Capacity, each	350 gpm
Head at rated capacity	255 ft
Design pressure	225 psig
Materials	
Pump casing	SS 316
Shaft	SAE 4140
Impeller	SS 316
Waste Bottoms Pump [b]	
Number	1
Type	Horizontal centrifugal
Motor horsepower	3 hp
Capacity	10 gpm
Head at rated capacity	70 ft
Design pressure	175 psig
Materials	
Pump casing	SA 296, Gr. CN-7M
Shaft	SA 322, Gr. 4140
Impeller	SA 296, Gr. CN-7M
Overhead Gas Compressor	
Number	2 (one required)
Type	Diaphragm
Motor horsepower	10 hp
Capacity, each	2.5 scfm
Discharge pressure at capacity	125 psig
Design pressure	200 psig
Materials	
Cylinder	Carbon steel
Piston rod	Forged steel
Piston	Nodular iron
Diaphragm and parts contacting gas	SS 302/304 or SS 316
Boron Recovery Filters	
Number	2 (one required)
Retention size	1-3 microns
Filter element material	Fiber
Capacity, normal	240 gpm

b. Installed but not used.

Table 9.2-1 (continued)
BORON RECOVERY SYSTEM COMPONENT DESIGN DATA

Boron Recovery Filters (continued)	
Capacity, maximum	300 gpm
Housing material	SS 304
Design pressure	150 psig
Design temperature	250°F
Design code	ASME III C
Boron Evaporator Bottoms Filters [b]	
Number	2 (one required)
Retention size	25 microns
Filter element material	Fiber
Capacity, normal	20 gpm
Capacity, maximum	50 gpm
Housing material	SS 304
Design pressure	150 psig
Design temperature	250°F
Design code	ASME III C
Boron Cleanup Filter	
Number	1
Retention size	5 microns
Filter element material	Fiber
Capacity, normal	100 gpm
Capacity, maximum	130 gpm
Housing material	SS 304
Design pressure	150 psig
Design temperature	250°F
Design code	ASME III C
Cesium Removal Ion Exchangers	
Number	2 (one required)
Design flow	25 gpm/ft^2
Resin type	Cation, mono bed
Resin active volume	45 ft^3
Design pressure	200 psig
Design temperature	250°F
Material	SS 316
Design code	ASME III C

b. Installed but not used.

Table 9.2-1 (continued)
BORON RECOVERY SYSTEM COMPONENT DESIGN DATA

Boron Cleanup Ion Exchanger (Boron Evaporator Feedwater Demineralizer)

Number	2 (one required)
Design flow	10.5 gpm/ft^2
Resin type	Cation-anion, mixed-bed
Resin active volume	45 ft^3
Design pressure	200 psig
Design temperature	250°F
Material	SS 316
Design code	ASME III C

Table 9.2-2
BORON RECOVERY SYSTEM MALFUNCTION ANALYSIS

Component	Malfunction	Comments and Consequences
Tanks and other components containing letdown liquids with dissolved gasses	Leak	Tanks and other components are protected from over-pressure by automatic controls and relief valves; therefore only minor leaks are considered possible. The total gas content of the gas stripper and associated gas holding tanks is less than the holdup tanks in the gaseous waste gas disposal system (Section 14.4.2), so even a total release via the auxiliary vent system could be accommodated (Section 9.13).
Boron recovery tanks	Leak	Only degassed liquids are normally stored in these tanks, which are protected by dikes capable of retaining the entire contents of the tank. The dikes are Class I structures.
Gas stripper and associated pumps, heater, and controls	Fail to function	Letdown due to boration of the reactor coolant system can be diverted directly to the boron recovery tanks, which are vented through the monitored gaseous waste disposal system. Dilution letdown can be delayed.
One boron recovery evaporator or auxiliaries	Fails to function	The boron recovery evaporators are no longer used to process CVCS letdown. Letdown is processed as liquid waste in the Radwaste Facility by either reverse osmosis and ion exchange or by the radwaste facility evaporators. Furthermore, the Radwaste Facility has an additional collection/surge capacity of approximately 120,000 gallons. Multiple processing options ensure that sufficient letdown processing capacity is available while repairs are being made. Sufficient capability to make boric acid solution for station requirements exists in the boric acid batch tanks, and the primary-grade water tanks can supply adequate quantities of water.
Primary-grade water pump	Fails to function	Two 100%-capacity pumps are provided to permit maintenance.

Figure 9.2-1 (SHEET 1 OF 4)
BORON RECOVERY SYSTEM

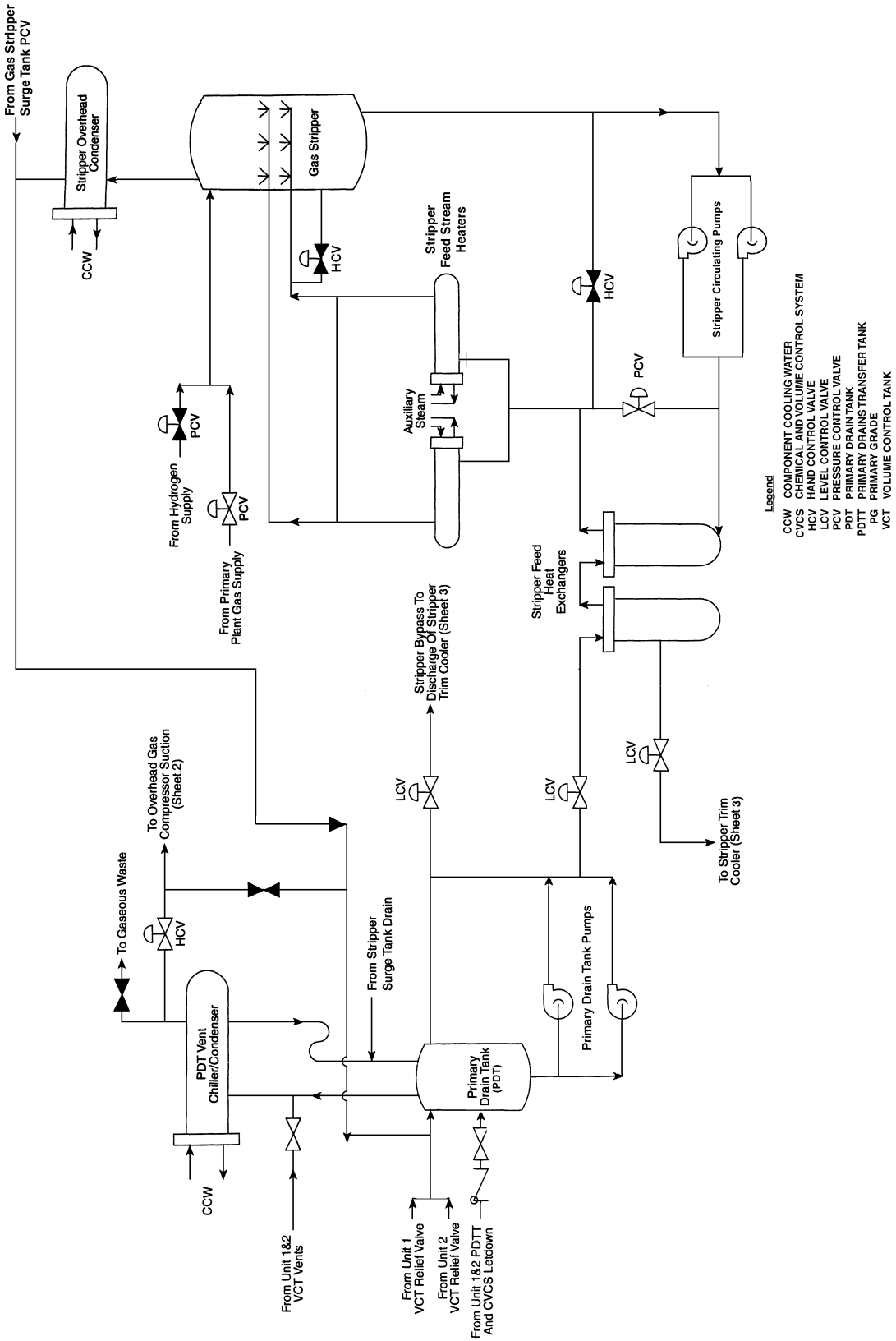

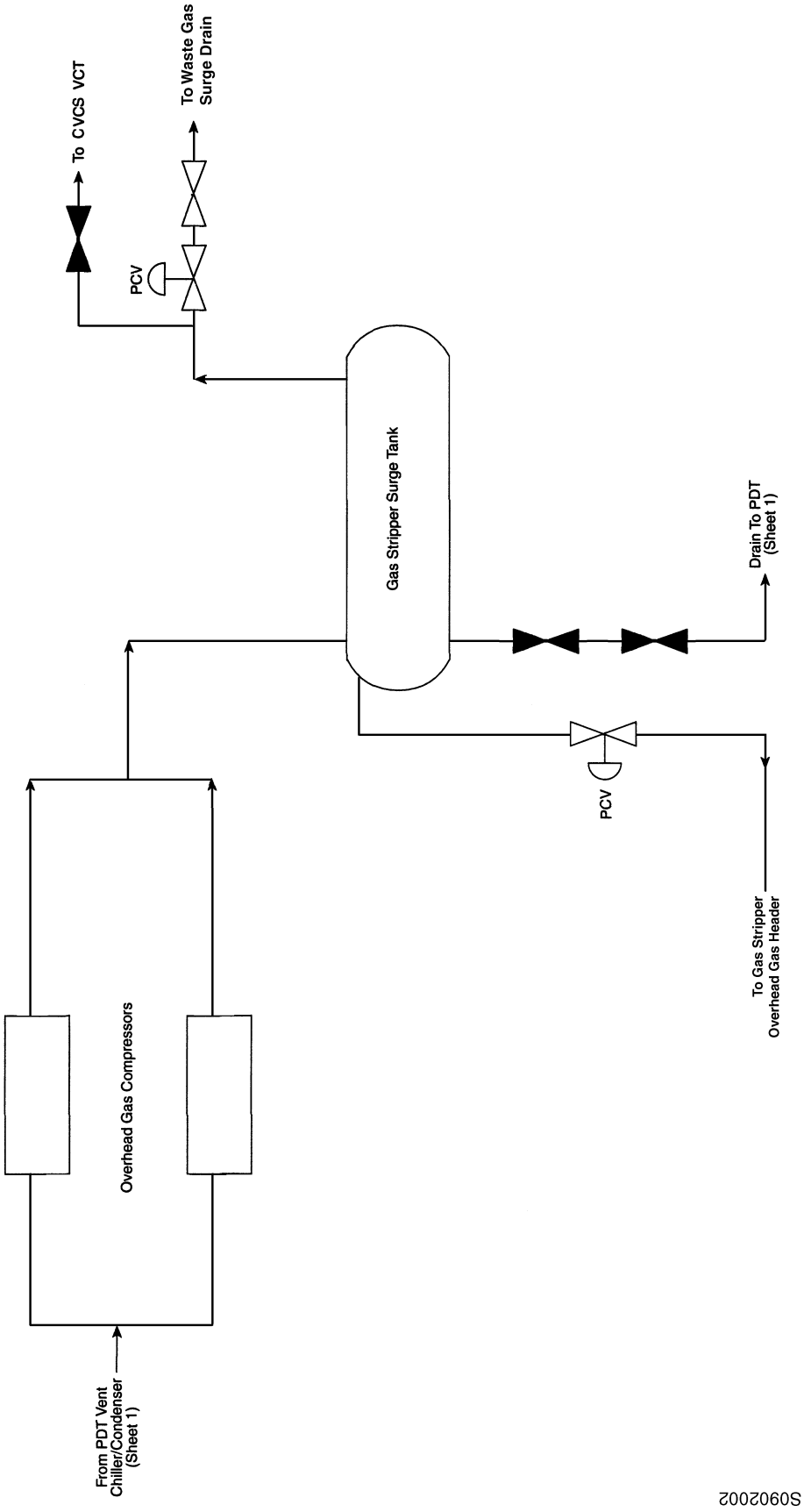

Figure 9.2-1 (SHEET 2 OF 4)
BORON RECOVERY SYSTEM

Figure 9.2-1 (SHEET 3 OF 4)
BORON RECOVERY SYSTEM

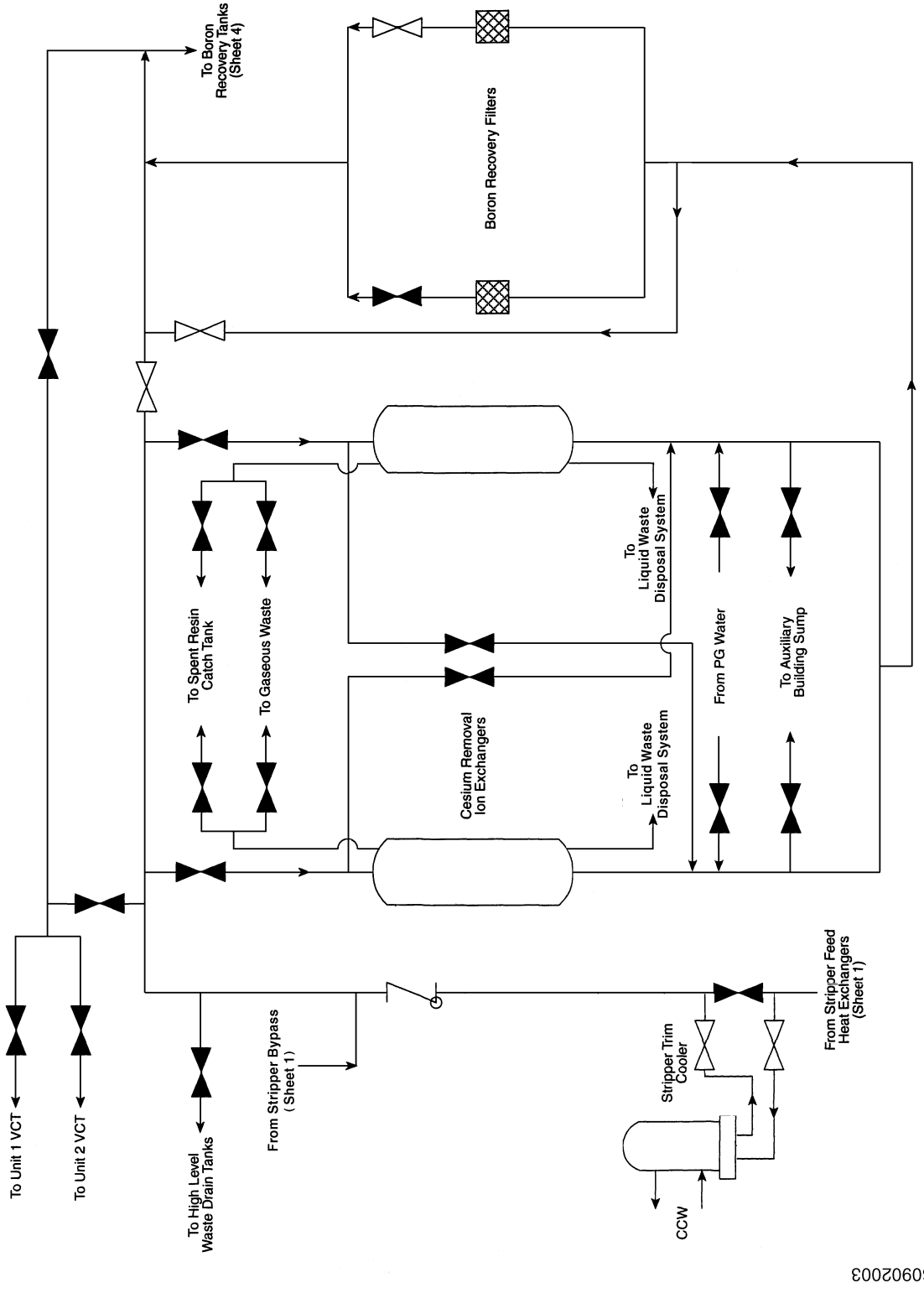

Figure 9.2-1 (SHEET 4 OF 4)
BORON RECOVERY SYSTEM

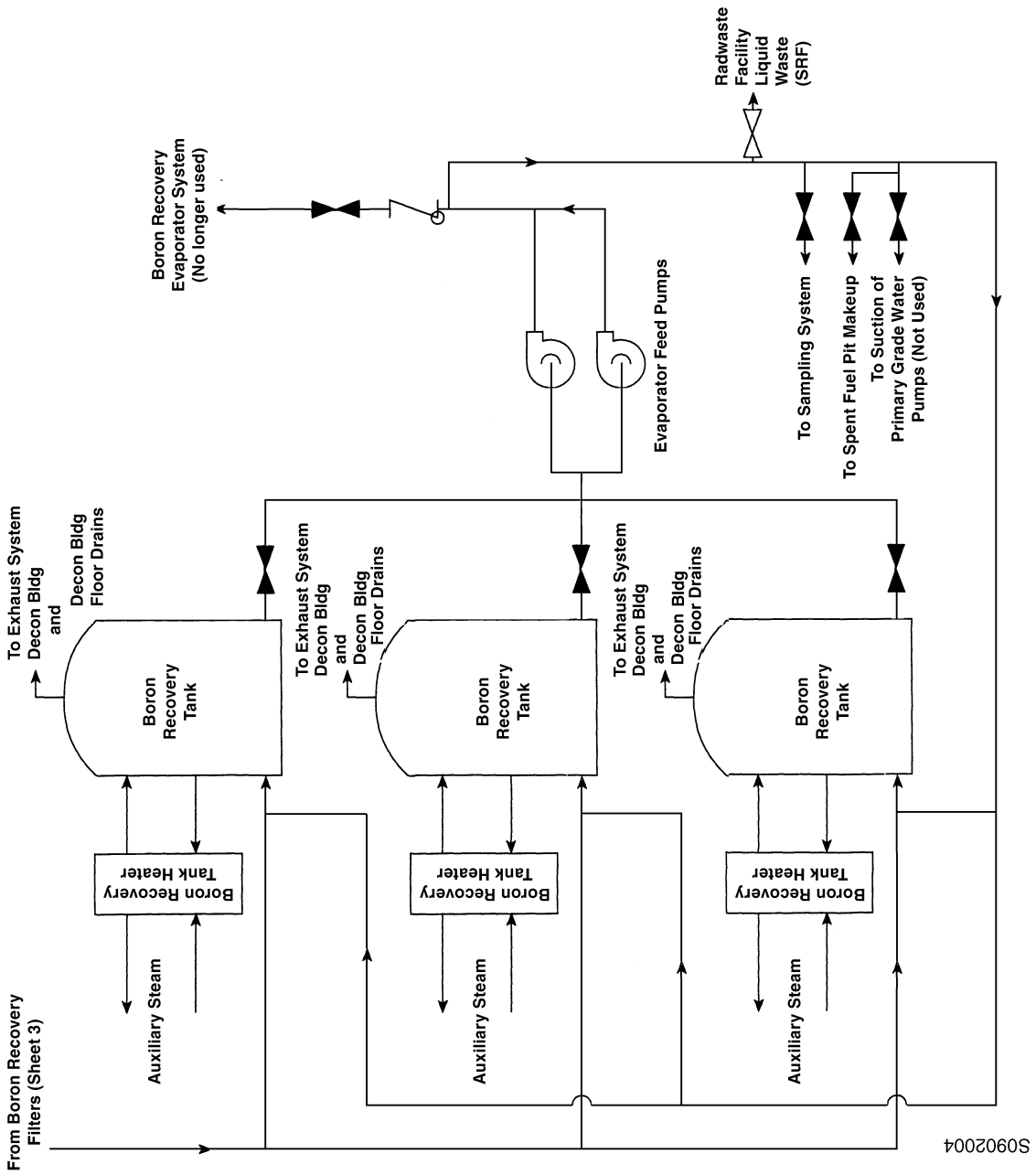

Intentionally Blank

9.3 RESIDUAL HEAT REMOVAL SYSTEM

9.3.1 Design Bases

The residual heat removal system is shown in Figure 9.3-1 and Reference Drawing 1. It is designed to remove residual and sensible heat from the core and reduce the temperature of the reactor coolant system during the second phase of unit cooldown. During the first phase of cooldown, the temperature of the reactor coolant system is reduced by transferring heat from the reactor coolant system (Chapter 4) to the steam and power conversion system (Chapter 10).

The residual heat removal system is designed to be placed in operation when the reactor coolant temperature has been reduced to approximately 350°F and the reactor coolant pressure is between 400 and 450 psig. These conditions are assumed to occur approximately 4 hours after reactor shutdown. The residual heat removal system is designed to reduce the temperature of the reactor coolant from 350°F to 140°F over a period of 16 hours. With one pump in service, the residual heat removal system can reduce the temperature of the reactor coolant from 350°F to 200°F within 26 hours, and from 200°F to 140°F prior to beginning refueling operations.

The system design precludes any significant reduction in the overall design reactor shutdown margin when the system is brought into operation for residual heat removal by equalizing the boron concentration and the temperature with the reactor coolant system.

System components, whose design pressure and temperature are less than the reactor coolant system design limits, are provided with redundant isolation means and overpressure protective devices.

A residual heat removal system is provided for each unit.

Any leakage from the residual heat removal system goes either to the containment or to the component cooling system, which is a closed system. Any migration of radioactivity would be detected by the containment particulate and gas monitors (Section 11.3) if the leak was to the containment. If the leak was to the component cooling system, the component cooling water monitor would alarm in the event that the radiation level reached a preset level above the normal background.

All active system components that are relied upon to perform their function are redundant, and the system design includes provisions to enable periodic hydrostatic testing to applicable code test pressures.

9.3.1.1 Codes and Classifications

All piping and components of the residual heat removal system are designed to the applicable codes and standards listed in Table 9.3-1. Since the system contains reactor coolant when it is in operation, austenitic stainless steel piping is used. The residual heat removal system is a Seismic Class I system.

9.3.2 System Design and Operation

9.3.2.1 System Description

The residual heat removal system, shown in Figure 9.3-1 and Reference Drawing 1, consists of two residual heat exchangers, two residual heat removal pumps, and associated piping, valves, and instrumentation.

One pump and one residual heat exchanger are enough to perform the decay heat transfer functions for the unit. After the reactor coolant system temperature has been reduced to approximately 350°F and the reactor coolant pressure is between 400 and 450 psig, further system cooling is initiated by aligning the pumps to take suction from the reactor coolant hot leg and discharge through the heat exchangers into the reactor coolant cold leg.

During unit cooldown, reactor coolant flows from the reactor coolant system to the residual heat removal pumps, through the tube side of the residual heat exchangers, and back to the reactor coolant system. The inlet line to the residual heat removal system is located in the hot leg of reactor coolant loop A between the main loop stop valve and the reactor core. The return line connects to the B & C through the safety injection system. The heat loads are transferred by the residual heat exchangers to the component cooling water in the component cooling system (Section 9.4).

During unit cooldown, the cooldown rate of the reactor coolant is controlled by regulating the flow through the tube side of the residual heat exchangers. A single bypass line with a remotely operated control valve around both residual heat exchangers is used to maintain a constant coolant flow through the residual heat removal system while controlling coolant temperature.

To assure that adequate head is available for the RHR pumps during cold shutdown (reactor coolant level below Elevation 24 ft.) and during refueling, reactor coolant level monitoring is available. Level instrumentation to prevent loss of shutdown cooling is discussed in Section 7.12.

The entire residual heat removal system is located inside the containment, with the exception of the line penetrating the containment that connects to the refueling water storage tank.

The residual heat removal pumps are normally controlled from the control room. In the event of a control room evacuation, pumps can be operated at the switchgear in the emergency switchgear room. See Section 7.7.2 for discussion on compliance with 10 CFR 50 Appendix R.

During refueling, the water level in the reactor cavity is lowered by opening a valve at the residual heat removal pump discharge and then pumping the water into the refueling water storage tank, while maintaining as adequate flow to the RHR heat exchanger(s) to ensure the continued removal of residual heat from the core.

The RHR system air operated valves are equipped with quick-disconnect instrument air fittings to provide a method to locally operate the valves with a portable air source. The operation

of these valves is required for decay heat removal during plant cooldown following a postulated fire in accordance with the requirements of Appendix R to 10 CFR 50.

The residual heat removal system is not an engineered safeguards system.

9.3.2.2 **Components**

Residual heat removal system component design data are listed in Table 9.3-2.

9.3.2.2.1 Residual Heat Exchangers

The residual heat exchangers are of the shell and U-tube type, with the tubes welded to the tube sheet. Reactor coolant circulates through the tubes while component cooling water circulates through the shell side. The tubes and other surfaces in contact with reactor coolant are austenitic stainless steel, and the shell is carbon steel.

9.3.2.2.2 Residual Heat Removal Pumps

The two residual heat removal pumps are in-line vertical centrifugal units with mechanical seals to prevent reactor coolant leakage. All pump parts in contact with reactor coolant are austenitic stainless steel or adequate corrosion-resistant material.

9.3.2.2.3 Residual Heat Removal System Valves

The valves used in the residual heat removal system are constructed of austenitic stainless steel or other adequate corrosion-resistant materials, such as Haynes alloy 25 and 17-4 PH stainless steel.

Manual stop valves are provided to isolate the pumps or the heat exchangers for maintenance. Butterfly valves are provided for control of residual heat exchanger tube-side flow. Check valves prevent reverse flow through the residual heat removal pumps.

Isolation of the residual heat removal system is achieved with two remotely operated stop valves in series in the pipe from a reactor hot leg to the suction side of the residual heat removal pump, and by a check valve (located in the safety injection system) in series with a remotely operated stop valve in each line from the residual heat removal system. System pressure is relieved through a relief valve to the pressurizer relief tank in the reactor coolant system.

Valves that perform a modulating function are equipped with two sets of packing and an intermediate leakoff connection that discharges to the vent and drain system (Section 9.7).

Manually operated valves have backseats to facilitate repacking and to limit stem leakage when the valves are open. Leakoff connections are provided where required by valve size and fluid conditions.

9.3.2.2.4 Residual Heat Removal System Piping

All residual heat removal system piping is austenitic stainless steel. Piping is welded, except at the flanged connections of the flow control valves.

Portions of the residual heat removal system potentially contain stagnant oxygenated borated water during plant operation (References 1 & 2). System integrity is maintained by means of periodic sampling and inservice inspection requirements. Residual heat removal system chemistry guidelines are given in Table 9.3-3.

9.3.3 System Design Evaluation

9.3.3.1 Availability and Reliability

For reactor coolant system cooldown, the residual heat removal system is provided with two pumps and two residual heat exchangers. If one of the two pumps and/or one of the two heat exchangers is not operative, safe operation of the unit is not affected.

A radiant energy shield is installed between the residual heat removal pump motors to satisfy 10 CFR 50, Appendix R, requirements.

9.3.3.2 Incident Control

The suction side of the residual heat removal system is connected to the reactor coolant hot leg of A loop and the discharge side to the cold legs of the B & C loops through the safety injection system. On the suction side, the connection is through two electric motor-operated gate valves in series. Both valves are interlocked with reactor coolant system pressure so that, if the reactor coolant system pressure exceeds a set pressure, the valves do not open. On the discharge side of the residual heat removal system, each connection is made through an electric motor-operated valve in series with a check valve. The motor-operated valves are closed whenever the reactor coolant system pressure and temperature exceed approximately 450 psig and 350°F, respectively.

The fluid operating pressure is higher at all times on the tube side of the residual heat exchanger than on the shell side, varying over an approximate range of 450 to 100 psig, so that in case of leakage, reactor coolant leaks into the component cooling water in the shell side. Abnormally high radiation levels in the component cooling water would be indicated in the control room, at which time the control valve in the vent line from the component cooling surge tank to the process vent would be closed by manual operation of a control switch in the control room, if it had not previously closed automatically due to high-radiation signals from transmitters installed in the component cooling water piping. Inleakage to the component cooling water, if not stopped, results in high level in the component cooling surge tank, and eventually fills the tank. Excess water from the tank is disposed of by a relief valve discharging to the auxiliary building sump. After the leakage condition is corrected, radioactivity in the component cooling water is reduced by bleed and feed or as discussed in Section 9.4.4.7.

The residual heat removal pumps are driven by drip-proof-type motors with Class B epoxy-type insulation capable of operation in high-humidity conditions. They are equipped with splash barriers to protect the motors in the event of a pipeline break in the area, which could possibly spray and wet the motors.

The inlet line from the reactor coolant system to the residual heat removal system is between the reactor core and the outlet loop isolation valve. Thus, if the outlet or inlet loop isolation valve is closed, the inlet from the reactor coolant system to the residual heat removal system is not blocked.

9.3.3.3 **Malfunction Analysis**

A failure analysis of residual heat removal pumps, heat exchangers, and valves is presented in Table 9.3-4.

9.3.4 Tests and Inspections

The residual heat removal pump flow instrument channels are calibrated during each refueling operation.

The active components of the residual heat removal system are tested in accordance with ASME Code requirements. Periodic visual inspections and preventative maintenance are conducted, following normal industrial practice.

9.3 REFERENCES

1. U. S. Nuclear Regulatory Commission, *IE Bulletin 79-17*, *Pipe Cracks in Stagnant Borated Water Systems at PWR Plants,* July 26, 1979.
2. Virginia Electric and Power Company, *Response to IE Bulletin 79-17,* August 30, 1979.

9.3 REFERENCE DRAWINGS

The list of Station Drawings below is provided for information only. The referenced drawings are not part of the UFSAR. This is not intended to be a complete listing of all Station Drawings referenced from this section of the UFSAR. The contents of Station Drawings are controlled by station procedure.

	Drawing Number	Description
1.	11448-FM-087A	Flow/Valve Operating Numbers Diagram: Residual Heat Removal System, Unit 1

Table 9.3-1
RESIDUAL HEAT REMOVAL SYSTEM CODE REQUIREMENTS

Residual heat exchangers	ASME III, Class C, tube side ASME VIII, shell side
Residual heat removal piping and valves	USAS B31.1
Residual heat removal pumps	No code

Table 9.3-2
RESIDUAL HEAT REMOVAL SYSTEM DESIGN DATA

General system design, including piping and valves	
Design pressure	600 psig
Design temperature	400°F
Residual heat removal pumps	
Quantity	2
Type	In-line centrifugal
Capacity, each	4000 gpm
Head at rated capacity	230 ft H_2O
Motor horsepower	300 hp
Material	Austenitic stainless steel and equivalent corrosion-resistant materials
Design pressure	600 psig
Design temperature	400°F
Seal type	Mechanical
Residual heat exchangers	
Quantity	2
Type	Shell and U-tube
Design heat transfer rate, each	33×10^6 Btu/hr
Shell (component cooling water)	
Design temperature	200°F
Design pressure	150 psig
Design flow rate	4.45×10^6 lb/hr
Design inlet temperature	105°F
Design outlet temperature	112°F
Material	Carbon steel
Tube (reactor coolant)	
Design temperature	400°F
Design pressure	600 psig
Design flow rate	1.87×10^6 lb/hr
Design inlet temperature	140°F
Design outlet temperature	124°F
Material	Austenitic stainless steel

Table 9.3-3
RESIDUAL HEAT REMOVAL SYSTEM CHEMISTRY GUIDELINES

Chemistry Parameter[a]	Requirement
pH at 25°C[b]	≈4.5
Conductivity at 25°C	< 1 to 40 µmhos[b]
Suspended solids	1.0 ppm max
B	≈2500 ppm
$C1^-$	0.15 ppm max
F^-	0.15 ppm max
O_2[c]	0.10 ppm max

a. Sampling is performed when the system is in operation.

b. Expected value. Determined by the concentration of boric acid and alkali present.

c. Limit not applicable with $T_{avg} \leq 250°F$.

Table 9.3-4
RESIDUAL HEAT REMOVAL LOOP MALFUNCTION ANALYSIS

Component	Malfunction	Comments and Consequences
Residual heat removal pump	Rupture of casing	The casing and shell are designed for 600 psig and 400°F. The pump is protected from overpressurization by a relief valve in the piping discharging to the pressurizer relief tank. The pump can be inspected, and is located in the containment structure with protection against missiles. Rupture is not considered credible.
Residual heat removal pump	Pump fails to start	One operating pump furnishes enough flow to meet the required cooldown rate.
Residual heat removal pump	Manual valve on pump suction is closed	This is prevented by administrative controls during pre-startup and operational check.
Residual heat removal pump	Stop valve in discharge line closed or check valve sticks closed	Pre-startup and operational checks confirm position of valves.
Remote operated valve inside containment in pump suction line	Valve fails to open	Valve position indication light indicates that the valve has not opened. Valve is opened manually or unit is slowly cooled by feed and bleed procedures.
Motor-operated valve inside containment in system discharge line	Valve fails to open	Two valves in parallel. If one fails to open, flow passes through other valve.
Residual heat exchanger	Tube or shell rupture	Rupture is considered very unlikely because of low operating pressure as compared to design pressure. In any event, the faulty heat exchanger can be isolated and the remaining heat exchanger used for cooldown.
Valve in bypass line around residual heat exchangers	Valve sticks open	Part of flow does not pass through residual heat exchangers increases the time for unit cooldown.

Figure 9.3-1
RESIDUAL HEAT REMOVAL SYSTEM

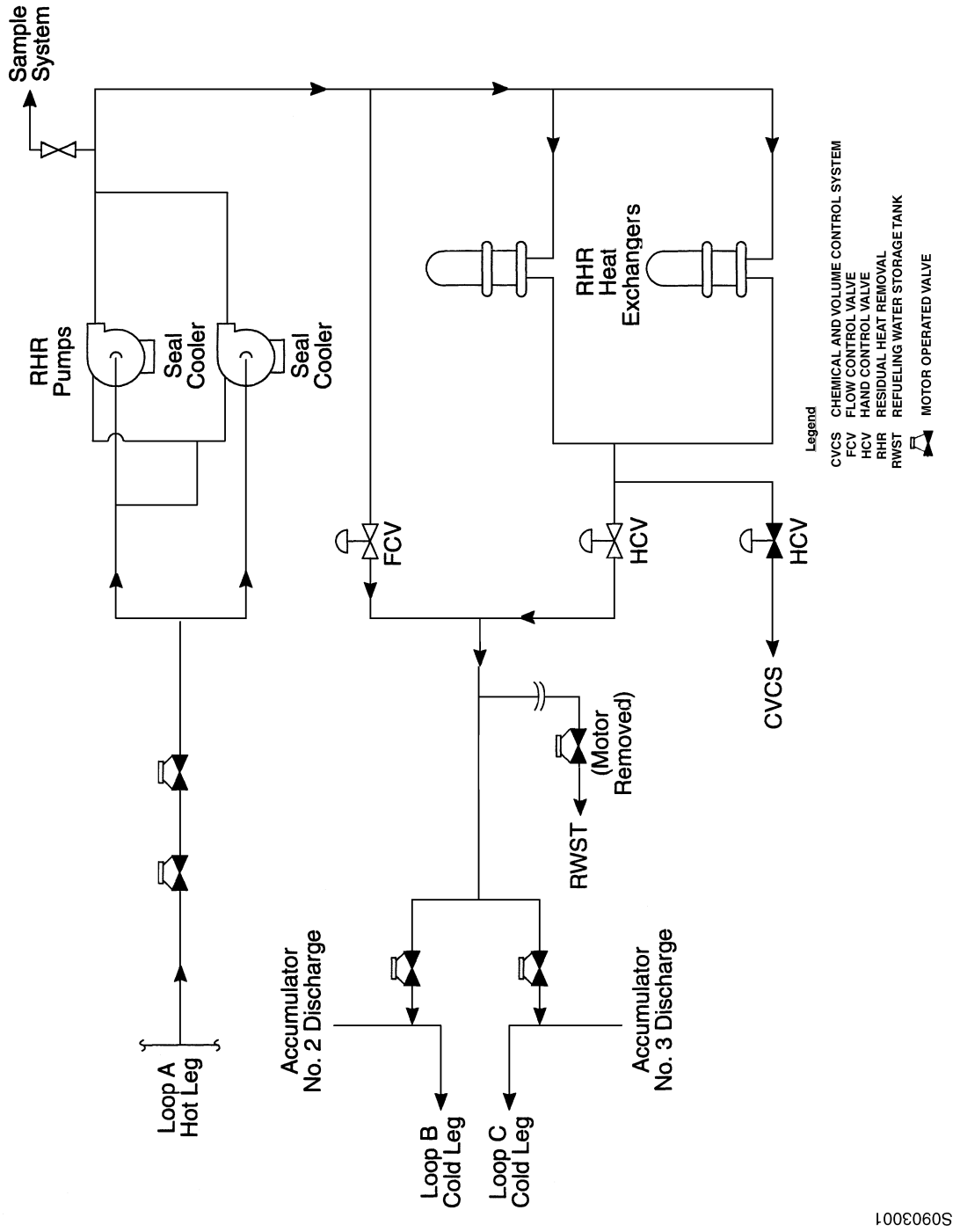

9.4 COMPONENT COOLING SYSTEMS

The component cooling systems consist of the following:

1. Component cooling water system.
2. Chilled component cooling water system.
3. Chilled water system.
4. Neutron shield tank cooling water system.
5. Charging pump cooling water system.

These systems are used separately or in combination to supply cooling water for heat removal from various station components. The component cooling systems are shown on Figures 9.4-1 through 9.4-5 and Reference Drawings 1 through 9. A review of the effects of the power uprate to a core power of 2546 MWt was conducted and the component cooling system was found to be adequate.

9.4.1 Design Bases

9.4.1.1 Component Cooling Water System

A common supply of component cooling water serves both units to:

1. Provide cooling water to remove residual and sensible heat from the reactor coolant system during unit shutdown and cooldown.
2. Cool spent-fuel pool water.
3. Cool reactor coolant pump motor coolers.
4. Cool letdown flow in the chemical and volume control system during power operation.
5. Cool reactor coolant pump seal-water return flow.
6. Supply makeup water to the neutron shield tank cooling water system.
7. Supply makeup water to the charging pump cooling water system.
8. Provide the cooling water supply to the neutron shield tank coolers and the containment recirculation air coolers (Section 5.3.1.3.1).
9. Provide cooling water to dissipate waste heat from other reactor and station components.

The component cooling water system is an intermediate cooling system that transfers heat from heat exchangers containing reactor coolant or other radioactive liquids to the service water system (Section 9.9). The maximum heat load occurs during the initial stages of residual heat removal during a reactor unit cooldown. The component cooling water system is designed to reduce the temperature of the reactor coolant to 140°F based on a river water temperature of 95°F.

During normal full-power operation, one component cooling pump and one component cooling heat exchanger can accommodate the heat removal loads for each reactor unit. Operation of two pumps and two heat exchangers is the standard procedure during the removal of residual and sensible heat during unit cooldown, although one pump and one exchanger may be safely used under these conditions.

Operation of the component cooling water (CCW) system is required in the event of a hurricane for the removal of decay heat to attain and maintain long-term safe shutdown. The operation of the CCW system during a design basis hurricane is discussed in Section 2.3.1.2.2. and 9.9.1.3.

Each of the four component cooling heat exchangers is designed to remove the entire heat load from one unit plus half of the heat load common to both units during normal operation. Each heat exchanger is also capable of removing half of the heat load occurring four hours after a shutdown of one unit under conditions representing the maximum allowable cooldown rate.

The Vacuum Priming System ties into each component cooling heat exchanger at the top of the inlet and outlet channel heads, which are the high points of the portion of the service water that supplies the heat exchangers. The Vacuum Priming System is utilized to initiate the siphon action when placing the heat exchangers in service. The design of the component cooling heat exchanger service water piping system does not require that the Vacuum Priming System remain in service for the heat exchanger to be operable. To protect against a break in the vacuum priming lines and subsequent loss of service water flow, design changes were implemented to add a check valve in the vacuum priming line and provide separate float valves for the inlet and outlet channel heads. The portion of the vacuum priming line between the check valve and the channel heads of each heat exchanger is safety-related.

The presence of excess radioactivity in the component cooling water system is detected by two gamma scintillation radiation monitors. High-radiation signals from either of these detectors cause the surge tank vent isolation valve to shut and initiate an alarm in the control room. One detector monitors the supply to Unit 1 and is mounted on the 18-inch combined-discharge line from component cooling heat exchangers 1-CC-E-1A and 1B. The second detector monitors the supply to Unit 2, and is mounted on the 18-inch combined-discharge line from component cooling heat exchangers 1-CC-E-1C and 1D. Both detectors are located in the Unit 1 turbine building to prevent possible interference from background radiation levels in the auxiliary building. Operation of these detectors is described in Section 11.3.3.

Component design data for the component cooling water system are given in Table 9.4-1. A more detailed system description is given in Section 9.4.3.1.

Portions of the component cooling water system are designed as Class I (Section 15.2.1).

9.4.1.2 Chilled Component Cooling Water System

The chilled component cooling water system circulates chilled component cooling water to selected components for cooling when normal temperature limits cannot be maintained by the component cooling system. A more detailed system description is given in Section 9.4.3.2.

The chilled component cooling water system can be used to supply water to the following components:

1. Containment recirculation air coolers.
2. Neutron shield tank coolers.
3. Primary drain tank vent chiller condenser (Unit 1 chilled component cooling water system only).
4. Recombiner aftercooler (Unit 1 chilled component cooling water system only).
5. Steam generator recirculation coolers.

Three chilled component coolers and three chilled component cooling pumps are provided for the chilled component cooling water subsystem that serves both units. A pump and cooler serves each unit and one pump and cooler is provided for use as a spare. The piping is arranged so that the spare cooler and pump can be used together for either unit or individually to replace a component normally used for either unit.

Chilled component cooling water system component design data are given in Table 9.4-10.

9.4.1.3 Chilled Water System

Chilled water is provided separately for each unit. Each 400-ton capacity chilled water system is designed to supply 1260 gpm of 40°F chilled water.

The chilled water system provides cooling to the chilled component cooling heat exchangers.

Chilled water is also used directly to cool the water in the refueling water storage tank to nominal 45°F after a refueling operation.

Chilled water system component design data are given in Table 9.4-2. Additional system data are given in Tables 9.4-3 through 9.4-5. A more detailed system description is given in Section 9.4.3.3.

9.4.1.4 Neutron Shield Tank Cooling Water System

The neutron shield tank cooling water system is designed to circulate and cool the water in the neutron shield tank, which is heated by neutron and gamma radiation.

Two neutron shield tank coolers, a neutron shield surge tank, a corrosion control tank, and all necessary piping and valves comprise the system serving each reactor unit. Each neutron shield tank cooler has 100% capacity. The second cooler is a spare that can be placed in operation remotely by means of motor-operated valves.

Neutron shield tank cooling system component design data are given in Table 9.4-6. A more detailed system description is given in Section 9.4.3.4.

9.4.1.5 Charging Pump Cooling Water System

The charging pump cooling water system consists of two separate subsystems: a component cooling water subsystem and a service water subsystem. The charging pump service water system is described in Section 9.9.2.1.

A separate charging pump cooling water system is provided for each reactor unit.

The charging pump component cooling water system is designed to transfer heat from the charging pump mechanical seal coolers to the intermediate seal coolers.

Charging pump component cooling water system component design data are given in Table 9.4-7. A more detailed system description is given in Section 9.4.3.5.

The charging pump component cooling water system is designed as Class I (Section 15.2.1).

9.4.2 Piping and Valves (Check Valves and Manually Operated Gate, Butterfly, and Globe Valves)

Carbon steel pipe is used throughout the system. Joints are welded, except where flanges are used at connections to equipment and to butterfly and check valves in sizes 10-inch and larger. All valves are of steel material except certain butterfly valves, which are cast iron. Selected piping, valves, and supports are designed as Class 2. Expansion joints are provided at the suction and discharge of the component cooling water pumps. The piping system conforms to the requirements of the USA Code for Pressure Piping B-31.1.

Small thermal relief valves are constructed with stainless steel body and trim and carbon steel bonnet and cap. Larger relief valves have carbon steel bodies with stainless steel trim.

9.4.3 System Descriptions

9.4.3.1 Component Cooling Water System Description

During operation, component cooling water is pumped through the shell side of the component cooling water heat exchangers, where it is cooled by service (river) water (Section 9.9), and then through parallel circuits that can cool the following components:

1. Reactor coolant pump thermal barriers, bearing oil coolers, and motor stators.
2. Excess letdown heat exchangers (intermittent heat load).

3. Nonregenerative heat exchangers.
4. Various primary and steam generator blowdown sample coolers (intermittent heat load).
5. Seal-water heat exchangers.
6. Residual heat removal pumps seal coolers (during the second phase of unit cooldown, Section 9.3.1).
7. Residual heat removal exchangers (during the second phase of unit cooldown, Section 9.3.1).
8. Boron recovery system equipment (intermittent heat load).
9. Containment penetration cooling coils.
10. Fuel pool coolers.
11. Reactor shroud cooling coils.
12. Primary shield penetration cooling coils.
13. Primary shield water wall coolers.
14. Primary drain coolers.
15. Liquid waste disposal system equipment (abandoned in place, with the exception of the contaminated drain tank pump cooler).
16. Gaseous waste disposal system equipment.
17. Neutron shield tank coolers.
18. Reactor containment recirculation air coolers.
19. Containment instrument air compressor heat exchangers.

The component cooling water system is designed as a closed system, with a surge tank at the pump suctions. The tank is the high point of the system and provides the required net positive suction head for proper operation of the pumps. The heat exchangers are located in the turbine building for Unit 1. Pumps, tanks, and some of the equipment cooled by the system are installed in the auxiliary building; the fuel pool coolers are in the fuel building, the containment instrument air compressors are in safeguards, and the steam generator blowdown sample coolers are in the turbine building; the remainder of the equipment served is located in the reactor containments. Two 18-inch main supply and two 18-inch main return lines are used for each reactor unit. These mains, in full size, are connected directly to the residual heat removal exchangers, located in the reactor containments at the extremities of the two piping loops. Reduced size branches connected to the mains form cross-circuits that serve the remainder of the apparatus being cooled. The majority of equipment common to both reactor units is located in the auxiliary building; the fuel pool coolers are in the fuel building. Associated cross-circuits are double connected to the mains for both reactor units. High-point vents and low-point drains are provided as required by the piping configuration.

Each cooling water outlet line from a piece of equipment contains a valve for controlling flow; the valve is either a manually operated globe type or an automatic air-operated type positioned by pressure or temperature control signals originating in cooled systems.

The system is provided with trip valves for isolating the containment structures in accordance with the requirements of the containment isolation system (Section 5.2).

The RHR heat exchanger component cooling water trip valves are equipped with quick-disconnect instrument air fittings to provide a method to locally operate the valves with a portable air source. The operation of these valves is required for decay heat removal during plant cooldown, following a postulated fire in accordance with the requirements of Appendix R to 10 CFR 50.

The system is monitored from the control room by indicators that display the following data (data of a common nature are displayed on both control boards):

1. Component cooling pump discharge pressure.
2. Radioactivity, temperature, and flow in the supply mains immediately downstream from the component cooling water heat exchangers.
3. Temperature and flow in the residual heat removal heat exchanger return mains at the exits from the reactor containments.
4. Temperature in the return mains at the component cooling pump suctions.
5. Level in the component cooling surge tank.

Pressure switches for automatic starting of standby pumps are installed in the component cooling pump discharge mains. Local indicators for pressure, temperature, level, and flow are provided on a general basis. Selected temperatures are sensed and output signals are fed into the computer monitoring system (Section 7.9), thus providing full- time scanning and alarming. These temperatures can be read out during periods of abnormal values. Other important temperatures, pressures, levels, and flows are alarmed in the control room when abnormal values are reached.

The component cooling water pumps are normally controlled from the control room. In the event of a control room evacuation, pumps can be operated at the switchgear in the emergency switchgear room. See Section 7.7.2 for discussion on compliance with 10 CFR 50 Appendix R.

Thermal relief valves are installed around equipment with a significant potential for overpressurization by a combination of closed component cooling water inlet and outlet valves and heat input from the isolated equipment. The overhead gas compressor, boron evaporator distillate pump, primary drain tank pump, waste gas compressor, residual heat removal pump seal cooler, and containment penetration coolers (inner and outer), are examples of equipment not requiring thermal relief protection, since their overpressurization potential is insignificant. A

relief valve and a vacuum breaker valve are provided for the component cooling surge tank. Also, a relief valve is installed on the line supplying makeup to the component cooling surge tank.

The surge tank level is maintained at a level sufficient to accommodate minor system surges and thermal swell due to cooldown operation without overflowing through the relief valve. The makeup line is double connected to both main condensate systems and a tie-in from the bearing cooling makeup pump; this provides redundancy, since it is unlikely that both turbine generators and bearing cooling makeup would be out of service during cooldown of a reactor unit. High level in the tank is lowered by manual operation of system low-point drains. The tank is equipped with a full-length gauge glass.

A 120-gallon-capacity chemical addition tank is connected to the component cooling pump suction and discharge piping. When utilized, the tank is charged with chemicals after being isolated and having its level lowered by manual valves. After closure of the charging and manual level valves and opening of the isolation valves, discharge pressure forces water into the tank and injects the mixture into the system at the pump suctions. Chemicals can also be added using a portable chemical addition pump.

The desired water chemistry is obtained by the addition of potassium chromate for corrosion inhibition with potassium hydroxide and potassium dichromate being added for pH control as needed. The design objective of the chemical treatment is to initially treat the system with a maximum of 500 ppm of chromate with control being maintained between 150-500 ppm of chromate at a pH of 8.0 to 9.5. Control within these parameters may be adjusted according to industry good practices. The 500 ppm maximum chromate limit applies only to subsystems that contain carbon-based mechanical seals. Sampling is performed at the central station in the auxiliary building. Several local sample points are also provided.

9.4.3.2 **Chilled Component Cooling Water System Description**

The chilled component cooling water system can be used to supply water to the following components when the component cooling water system cannot be maintained within normal limits:

1. Containment recirculation air coolers.
2. Neutron shield tank coolers.
3. Primary drain tank vent chiller condenser (Unit 1 chilled component cooling water system only).
4. Recombiner aftercooler (Unit 1 chilled component cooling water system only).
5. Steam generator recirculation coolers.

Typically, the chilled component cooling system is placed in service when the component cooling system supply temperature can no longer be maintained within normal limits. This

condition is usually encountered during summer months when river water temperature is high. The heat from the various system loads is transferred to the chilled water system.

The major components associated with the system are three pumps and three heat exchangers. Makeup water and a surge volume for the system are provided by the component cooling system.

The three chilled component cooling pumps are single-stage, centrifugal pumps. They provide the motive force to circulate chilled component cooling water through the system. When this system is in operation, normally two chilled component cooling pumps are running (one for each unit) and the third pump is used as a spare. The spare pump can be used to supply either Unit 1 or 2. The chilled component cooling pumps are controlled from the main control room.

Three chilled component coolers (heat exchangers) are used to transfer the heat from the chilled component cooling system to the chilled water system. Each cooler consists of a horizontally mounted shell, which encloses tubes, and tubesheets. One heat exchanger is provided for each reactor unit, and one is maintained as a spare but can serve either unit. The discharge of the chilled component cooling pump is directed through the shell of the heat exchanger, where heat is rejected to chilled water flowing through the heat exchanger tubes.

9.4.3.3 **Chilled Water System Description**

Each unit has an independent, closed-loop chilled water system. A third full-size spare chiller unit is provided with cross-tie chilled water piping to permit use by either unit. Manual valves are provided for component isolation and for cross-connections.

Each of the closed-loop systems consists of:

1. Full-sized chilled water circulation pumps (three for Unit 1, two for Unit 2).
2. A packaged centrifugal liquid chiller using refrigerant R22 for the vapor compression cycle, with a rotary compressor and motor, oil coolers, purge unit, pre-wired internal controls, indication, and a condenser section.
3. A surge tank with automatic level control and makeup from alternate condensate system sources.
4. Isolation and control valves.
5. Fluid systems and electrical component protection.
6. Necessary instrumentation and controls for local control.

The Unit 1 chiller and swing chiller are located on a platform at Elevation 35 feet in the northeast sector of the Unit 1 turbine building. Piping and valves are provided so that one chilled water pump is normally aligned with each chiller unit, with the third pump serving as backup to either loop. Two surge tanks are provided on the north wall of the Unit 1 operating floor.

The Unit 2 chiller and two full-sized chilled water pumps are located on Elevation 9 ft. 6 in. in the northeast sector of the Unit 2 turbine building. A surge tank for the system is located on the north wall of the Unit 2 turbine building operating floor.

Each chiller uses a rotary compressor, driven by a 468 hp, 4000V, drip-proof motor. Cooling is supplied to the chilled component cooling heat exchangers (Section 9.4.3.2).

For the normal operation of the system, a chilled water pump is started to establish the flow, and the pump minimum flow path is established to a surge tank that maintains constant pressure at the pump suction and provides an area for chemical addition.

Local flow indication as well as low-flow cutoff of the chiller, is provided for chilled water and bearing cooling (BC) water flow. Capacity control is achieved by use of a slide valve which provides fully modulating capacity control from 100% to 10% of full-load. The minimum inlet cooling water temperature to the chiller condensers is 63°F. The BC water is maintained in a range of 65 to 95°F by throttling the service water flow to the BC heat exchangers. The BC temperature is monitored and controlled by a station procedure.

Table 9.4-2 lists design conditions for the chilled water units.

Three 100%-capacity, horizontal centrifugal chilled water circulation pumps are provided in Unit 1:

1. One for the Unit 1 chiller.
2. One for the swing chiller.
3. One spare pump as backup to supply either chiller.

Two 100%-capacity, horizontal centrifugal chilled water pumps are provided in Unit 2.

A chilled water circulation pump is manually aligned and started to recirculate water through the chiller and service components. The pump is automatically stopped if suction pressure is low, or on motor thermal overload.

See Table 9.4-3 for a more detailed description of the chilled water circulation pumps.

The design conditions of the surge tanks are provided in Table 9.4-4.

The chilled water system comprises 150-lb rated carbon steel pipe and valves to meet the existing chilled water system requirements (see Table 9.4-5 for a listing of piping and valve data).

Control of the chilled water system is maintained from local control panels. Important parameters are monitored on the panels, with alarms provided in the control room.

The Chilled Component Cooling Water System has the capability to monitor the following:

1. Flow and temperature measurements at the inlet to the reactor containment air recirculation coolers.
2. Temperature measurement at the outlet of the reactor containment air recirculation coolers.

9.4.3.4 Neutron Shield Tank Cooling Water System Description

A neutron shield tank cooling system is provided for each reactor unit to cool the water in the neutron shield tank, which is heated by neutron and gamma radiation from the reactor. The heated water in the neutron shield tank rises by natural convection to the top of the tank and into the pipe connected to the neutron shield tank cooler. The cool water from the component cooling water system or the chilled water system is circulated through the neutron shield tank cooler, cooling the heated neutron shield tank water. Only one neutron shield tank cooler is required to perform the required cooling; the other cooler is a spare and is isolated from the system by motor-operated valves. A surge tank accommodates thermal expansion of the neutron shield water. A level sensor on the surge tank sends a signal to the control room to indicate low system level. A solenoid-operated valve is actuated from the control room to replenish the system from the component cooling water system. The corrosion control tank is used for the manual addition of a corrosion inhibitor when the reactor is not operating.

9.4.3.5 Charging Pump Component Cooling Water System Description

A charging pump cooling water system for each reactor unit provides component cooling water for the charging pump mechanical seal heat exchangers, which cool the water circulating in the charging pump mechanical seal cooling loops.

Either of two 100%-capacity cooling water pumps circulates the component cooling water in the system. A surge tank accommodates thermal expansion of the component cooling water. A level sensor in the charging pump seal cooling surge tank automatically actuates a makeup valve to replenish the subsystem from the component cooling water system. To ensure that component cooling water is continually available to the mechanical seal coolers, one pump is in operation and the other pump is in standby. The standby pump is automatically actuated on low pump discharge pressure to supply cooling water in the event of failure of the operating pump. Two 100%-capacity charging pump intermediate seal coolers are provided to cool the component cooling water that is circulated to the mechanical seal coolers.

The installation of two full-capacity charging pump component cooling water pumps and two full-capacity charging pump intermediate seal coolers provides 100% redundancy for this component cooling water system. All components of the charging pump component cooling water system, including pumps, heat exchangers, and tanks are designed to Seismic Class I criteria.

The charging pump component cooling water pumps are connected to the emergency electrical bus to ensure that they will operate in the event of a loss of station power.

Regulatory Guide 1.97 requirements for post-accident monitoring of component cooling water system status are satisfied by flow and temperature measurement at the discharge of each charging pump component cooling water pump. Flow and temperature transmitters are environmentally and seismically qualified in accordance with IEEE 323-1974 and IEEE 344-1975 respectively. Control room display is provided through the NUREG 0696 multiplexing system.

9.4.4 Design Evaluation

9.4.4.1 Component Cooling Water System Availability and Reliability

The component cooling water system uses machinery and equipment of conventional and proven design. All components are specified to provide maximum economy, safety, and reliability.

The installation of four pumps and four heat exchangers for two reactor units provides 100% backup during normal operation of the two units. During cooldown of one reactor unit, there is 100% backup for it if the other unit is out of service, and 50% backup if the other unit is in normal operation. If only one pump is available for cooldown of a reactor unit, the cooldown time is extended without equipment damage or hazard to the public or operating personnel. Seismic Class I spray barriers protect the component cooling pump motors from water due to operation of fire protection equipment or other causes.

Most of the piping, valves, and instrumentation in the reactor containment are located outside the reactor primary shield wall and above the post-accident water level in the bottom of the containment. The exceptions are the lines for the neutron shield tank coolers and the primary shield penetration and water wall cooling coils; these lines can be secured by valves located outside of the primary shield wall. The equipment in the containment is protected against credible missiles and flooding during post-accident operations. Also, shielding is provided to allow limited maintenance and inspection during power operation.

Equipment not located in the containment may be inspected and maintained during power operation.

Portions of the system are of Class I design and designed to the codes stated in Section 9.4.1. The main piping loops and the loop for the fuel pool coolers are analyzed and designed to meet associated thermal stress requirements.

The following components are located inside the containment: the excess letdown heat exchanger, reactor coolant pump thermal barrier, oil coolers and motor stators, primary shield penetration and water wall coolers, neutron shield tank coolers, reactor shroud cooling coils, primary drain coolers, residual heat removal heat exchangers, containment air recirculation coolers, residual heat removal pump seal coolers, and pipe penetration cooling coils. Isolation of flow from the component cooling water system to the containment is described in Section 5.2.

The component cooling surge tank, which normally operates at atmospheric pressure, is equipped with a vent line connected into the process vent system. The tank vent line contains an automatic shutoff valve; this valve, normally open, closes automatically upon receiving a high-radiation signal from either of the two radiation monitors located on the discharge piping from the component cooling water heat exchangers, and can be manually closed from the control room. The high-radiation condition that caused the valve closure is indicated by an alarm.

An air-operated trip valve is installed in the outlet cooling water header from the reactor coolant pump thermal barriers, in the outlet cooling water line from the excess letdown heat exchanger, and in the outlet cooling water line from the primary drain cooler. A check valve is installed in the inlet cooling water header to the bearing oil coolers, stator coolers, and in the inlet cooling water line to the excess letdown heat exchanger. Two check valves are installed in the inlet cooling water line to the thermal barriers. In the event that a leak occurs in the thermal barrier cooling coil, an alarm annunciates in the control room and the high-pressure reactor coolant is safely contained by closing the appropriate stop valve. A high cooling water outlet flow signal from either the thermal barrier cooling header or the excess letdown heat exchanger automatically closes the associated isolation valves. The air-operated stop valves in the outlet cooling water header from the thermal barriers and in the reactor containment recirculation air cooler outlet lines leaving the reactor containment close on a high-high containment pressure signal. The main cooling water lines from the residual heat removal heat exchangers leaving the reactor containment close on a safety injection signal.

9.4.4.2 **Component Cooling Water System Leakage Provisions**

The component cooling water heat exchangers are located in the turbine building. Provisions are made to preclude the possible spread of radioactive contamination. These precautions include isolation of each heat exchanger by manual shutoff of the inlet and outlet component cooling water valves, treatment of any leakage and water samples from these heat exchangers as radioactive, and installation of the heat exchangers within a curbed area to preclude radioactive contamination of the turbine building floor. Any leakage is then returned to the liquid waste disposal system (Section 11.2.3) via the sump pump which services the curbed area. The component cooling heat exchanger curbed area consists of a trough covered by grating surrounding the heat exchangers to direct any leakage to the sump pump. Welded construction is used almost exclusively throughout the system to minimize possibility of leakage from pipes, valves, and fittings.

Small leakage inside the containment is not considered to be objectionable. Contamination could result from the following: side-to-side leakage in a heat exchanger in the chemical and volume control, residual heat removal, or sampling systems, or a leak in the thermal barrier of a reactor coolant pump. Leakage from the system is primarily detected by falling surge tank level. Temperature, level, and flow indicators in the control room may be used to detect leakage at certain points. Elsewhere, leaks can be located by inspection or isolation.

9.4.4.3 **Incident Control**

The piping mains have the following valves at the containment walls: shutoff valves outside containment and check valves inside containment in supply lines; trip and shutoff valves outside containment in return lines. The trip valves close upon receiving the containment isolation signal from safety injection. Piping for the reactor coolant pumps, reactor shroud cooling coils, and containment recirculation air coolers is valved in an identical manner; however, the valves close on a high-high containment pressure signal (Section 5.2.2).

A backup air bottle supply is provided to ensure the RHR component cooling outside containment isolation trip valves will fail closed in the event of a loss of primary air supply. The RCP thermal barrier component cooling inside and outside containment isolation trip valves have an air lockup valve which will maintain air pressure to hold the trip valve open on a loss of normal air supply, but will not prevent the trip valve from closing on a loss of air to the actuator or on any valid close signal.

During periods of warmer river water, chilled component cooling water supplies the cooling water to the reactor containment recirculation air coolers. The transfer, or supply and return between the two systems, is accomplished by the use of air-operated flow-diverting valves. These valves are operated remote manually by means of a switch mounted on the ventilation panel in the control room. In warmer weather, the containment air coolers remain on chilled component cooling water supply unless a minor incident occurs.

9.4.4.4 **Component Cooling Makeup Water**

Makeup for the component cooling water system is provided from the discharge of the main condensate pumps, which draw on the condenser hotwell. Operation of engineered safety features will not be affected by loss of makeup water to the component cooling water system if offsite power is lost, since the component cooling water system is not required for operation of engineered safety features.

During normal prolonged outages of both units (with station power available), a separate makeup pump supplies makeup water to the closed-loop component cooling and bearing cooling systems.

To maintain component cooling water to the fuel pool cooling system (Section 9.5), a component cooling water pump can also be operated from the emergency electrical bus during a complete loss of offsite power. The component cooling water system is closed, and leakage from this system will be at a very slow rate. In addition, the component cooling water surge tank is a source of reserve water, which must be exhausted before makeup to the component cooling water system is required. If the component cooling water system requires makeup before offsite power is restored, a portable pump can be connected to supply makeup.

9.4.4.5 Cooling Water Support for Other Systems

In the event of a single failure in the component cooling water system (e.g., at the discharge header), cooling water for the reactor coolant pumps, the excess letdown heat exchanger, the residual heat removal system, and the nonregenerative heat exchanger would be lost. The charging pumps would not be affected because they have been provided with a separate system.

In the unlikely event of a total loss of component cooling water, the operator would bring the reactor to a safe shutdown, or hot standby condition, with all reactor coolant pumps tripped and letdown flow discontinued, but with charging pumps operating to supply seal-water injection flow to the reactor coolant pump seals. This condition can be maintained until the pressurizer has been filled by the injected seal-water, thereby providing time for restoration of component cooling water.

Boron adjustments may be made, if required, by shifting the charging pumps' suction to the refueling water storage tank. Additional adjustments can be made by aligning the boric acid storage tanks directly to the suction of the charging pumps, thereby introducing concentrated boric acid to the reactor coolant system through the seal-water injection flow to the reactor coolant pump seals.

The charging pump component cooling water system cannot be totally disabled by a single passive failure. The system has been designed with cross-connect piping and sufficient valves so that any single passive failure can be isolated, which will allow the system to continue to operate and provide cooling water to at least two charging pumps (Reference Drawing 9).

The isolation of a single passive failure and arrangement of the operable portion of the system to continue to provide the cooling water must be performed manually by the plant operators. In addition, the standby charging pump may have to be placed in operation, since the isolation of the single passive failure might prevent cooling water from reaching the operating charging pumps. The complete system is expected to be accessible during an accident; however, if the course of an accident were to result in gross fuel failure, the local area radiological dose rates may substantially restrict auxiliary building access. For this situation, the continued operation of the charging pump component cooling water system is not essential for the proper operation of the charging pumps.

9.4.4.6 Component Cooling Water System Malfunction Analysis

A failure analysis of equipment, components, and system interconnections is presented in Tables 9.4-8 and 9.4-9.

9.4.4.7 Component Cooling Cleanup

In the event the Component Cooling Water System becomes contaminated through leakage at interface points with radioactive systems, a means for removing the contaminants and reducing radiation levels is provided. Cleanup is provided from the Chilled Component Cooling Water

Subsystem which recycles a portion of the chilled water flow through one or both of the Boron Cleanup Ion Exchangers (1-BR-I-2A & B). Once through the ion exchanger(s), the processed component cooling water is returned to the Chilled Component Cooling Water pumps' suction header. Flow through the cleanup piping is monitored and maintained by local flow indication and a manual throttling valve. All piping and valves conform to Section 9.4.2.

9.4.5 Tests and Inspections

The component cooling system is subject to the applicable inservice inspection and inservice testing requirements of the ASME Code, as required by 10 CFR 50 (Code of Federal Regulations, Title 10, Part 50). Following installation of spare parts or piping modifications, visual inspections are conducted to confirm normal operation of the system. Routine pre-startup inspections are performed, along with periodic observation during operation.

9.4.6 Minimum Operating Conditions

Minimum operating conditions for the cooling water systems, if any, are given in the Technical Specifications.

9.4 REFERENCE DRAWINGSREFERENCE DRAWINGS

The list of Station Drawings below is provided for information only. The referenced drawings are not part of the UFSAR. This is not intended to be a complete listing of all Station Drawings referenced from this section of the UFSAR. The contents of Station Drawings are controlled by station procedure.

	Drawing Number	Description
1.	11448-FM-072A	Flow/Valve Operating Numbers Diagram: Component Cooling Water System, Unit 1
	11548-FM-072A	Flow/Valve Operating Numbers Diagram: Component Cooling Water System, Unit 2
2.	11448-FM-072B	Flow/Valve Operating Numbers Diagram: Component Cooling Water System, Unit 1
	11548-FM-072B	Flow/Valve Operating Numbers Diagram: Component Cooling Water System, Unit 2
3.	11448-FM-072C	Flow/Valve Operating Numbers Diagram: Component Cooling Water System, Unit 1
	11548-FM-072C	Flow/Valve Operating Numbers Diagram: Component Cooling Water System, Unit 2

	Drawing Number	Description
4.	11448-FM-072D	Flow/Valve Operating Numbers Diagram: Component Cooling Water System, Unit 1
	11548-FM-072D	Flow/Valve Operating Numbers Diagram: Component Cooling Water System, Unit 2
5.	11448-FM-072E	Flow/Valve Operating Numbers Diagram: Component Cooling Water System, Unit 1
6.	11448-FM-072F	Flow/Valve Operating Numbers Diagram: Component Cooling Water System, Unit 1
7.	11448-FM-072G	Flow/Valve Operating Numbers Diagram: Component Cooling Water System, Unit 1
8.	11448-FM-072H	Flow/Valve Operating Numbers Diagram: Component Cooling Water System, Unit 1
9.	11448-FM-071B	Flow/Valve Operating Numbers Diagram: Circulating and Service Water System, Unit 1
	11548-FM-071B	Flow/Valve Operating Numbers Diagram: Circulating and Service Water System, Unit 2

Table 9.4-1
COMPONENT COOLING WATER SYSTEM COMPONENT DESIGN DATA

I. Pumps		
Number	4 (2 required for normal operation of 2 reactor units)	
Type	Horizontal, centrifugal, single-stage	
Motor horsepower	600 hp	
Seal	Single mechanical	
Capacity	9000 gpm	
Head at rated capacity	200 ft	
Design pressure	200 psig	
Design temperature	220°F	
Materials		
Pump casing	Cast iron	
Shaft	Alloy steel, ASTM A107, Grade 1045	
Impeller	Cast iron	
II. Heat exchangers		
Number	4 (2 required for normal operation of 2 reactor units)	
Duty, each	50.3×10^6 Btu/hr	
	Shell	Tube
Design pressure	150 psig	150 psig
Design temperature	150°F	150°F
Operating pressure	95 psig	5.6 psig
Operating temperature, in/out	119.7/105.0°F	95.0/106.2°F
Material	Carbon steel	Titanium
Fluid	Component cooling water	Service water
Design code	ASME VIII, 1986	ASME VIII, 1986

Table 9.4-1 (continued)
COMPONENT COOLING WATER SYSTEM COMPONENT DESIGN DATA

III. Surge Tank	Shell	Tube
Number	1 (common to both units)	
Type	Cylindrical, horizontal	
Capacity	2810 gal	
Design pressure	40 psig	
Design temperature	150°F	
Material	Carbon steel	
Design code	ASME III, Class C	
IV. Chemical addition tank		
Number	1 (common to both units)	
Type	Cylindrical, vertical	
Capacity	120 gal	
Design pressure	150 psig	
Design temperature	150°F	
Material	Carbon steel	
Design code	ASME VIII	

Table 9.4-2
CHILLED WATER SYSTEM DESIGN CONDITIONS

Quantity	One 100% chiller for Unit 1 One 100% chiller for Unit 2 One 100% swing chiller for Unit 1 or 2
Equipment mark number	1-CD-REF-1A, 1B; 2-CD-REF-1
Type	Packaged, rotary chiller
Refrigerant, per charge	R-22, 2000 lb
Capacity	400 tons at 95°F maximum normal operating BC water and 390 tons at 105°F maximum design BC water for 52°F entering and 40°F leaving (chilled water)
Compressor voltage	4000V
Code stamping	Yes (Refrigerant side, waterside not required)
Compressor full-load input	366 kW

Table 9.4-3
CHILLED WATER CIRCULATION PUMP DATA

Manufacturer	Worthington Pump Corporation
Quantity	Three at Surry Unit 1 Two at Surry Unit 2
Type	4LR-11, horizontal centrifugal
Equipment mark number	1-CD-P-4A, B, C; 2-CD-P-4A, B
Pump design	
Flow	1320 gpm
Head (TDH)	250 ft
Operating temperature	35-60°F
Efficiency	74%
Net positive suction head available/required	58.4/20 ft
Design	124.9 bhp/125 motor hp
Speed	3600 rpm
Shaft sealing	Crane mechanical seal
Material	
Shaft	A-107-59T
Impeller	B62-52
Casing	A48-56
Design	
Pressure	175 psig
Temperature	N/A
Pump weight, total	640 lb
Motor type/motor voltage/insulation	Induction, ODP/460V/B

Table 9.4-4
CHILLED WATER SURGE TANK DATA

Manufacturer	Tower Iron Works
Quantity	Two at Surry Unit 1 One at Surry Unit 2
Equipment mark number	1-CD-TK-lA, 1B; 2-CD-TK-l
Capacity	340 gal
Operating/design pressure	0/30 psig
Operating/design temperature	40/150°F
Material	
Shell	SA-285 GRC ASME F&D, SA285 GRC
Supports	SA-36
Nozzles	SA-106 GRB
Code stamp	ASME VIII, Division 1
Dimensions	3 ft 6 in diameter x 4 ft 4 in B. L. to B. L.
Weight, empty	1300 lb
Weight, full of water	4200 lb

Table 9.4-5
CHILLED WATER SYSTEM PIPING AND VALVE DATA

Design pressure	200 psig
Design temperature	150°F
Design code	ANSI B31.1
Piping material	Carbon steel, ASTM A106, Gr. B, 1-in. type “J” insulation

Table 9.4-6
NEUTRON SHIELD TANK COOLING WATER SYSTEM COMPONENT DESIGN DATA

Neutron shield tank cooler		
Number	4 (two for each unit, one required)	
Duty, each	80,000 Btu/hr	
	Shell	Tube
Design pressure	150 psig	50 psig
Design temperature	100°F	150°F
Operating pressure	50 psig	15 psig
Operating temperature, in/out	80/85°F	125/90°F
Material	SS 316	SS 316
Fluid	Component cooling water	Shield tank water
Design code	ASME Section VIII	ASME Section VIII
Neutron shield tank surge tank		
Number	2 (one for each unit)	
Type	Cylindrical, vertical	
Capacity	1444 gal	
Design pressure	25 psig	
Design temperature	150°F	
Material	Carbon steel	
Design code	ASME VIII	
Corrosion control tank		
Number	2 (one for each unit)	
Type	Cylindrical, vertical	
Capacity	158 gal	
Design pressure	150 psig	
Design temperature	150°F	
Material	SS 304	
Design code	ASME VIII	

Table 9.4-7
CHARGING PUMP COMPONENT COOLING WATER SYSTEM
COMPONENT DESIGN DATA

Charging pump cooling water pump	
Number	2 per unit
Type	Centrifugal, in-line, single-stage
Motor horsepower	7.5 hp
Seal	Single mechanical
Capacity	90 gpm
Head at rated capacity	105 ft
Design pressure	150 psig
Design temperature	250°F
Materials	
Pump casing	Stainless Steel
Shaft	Stainless Steel
Impeller	Stainless Steel
Charging pump seal cooling surge tank	
Number	2 (1 per unit)
Type	Cylindrical horizontal
Capacity	20 gal
Design pressure	Atmospheric
Design temperature	150°F
Material	Carbon steel
Design code	ASME VIII

Table 9.4-8
CONSEQUENCES OF COMPONENT COOLING WATER SYSTEM MALFUNCTIONS

Components	Malfunction	Comments and Consequences
1. Component cooling water pumps	Pump casing ruptures	The casing is designed for 220°F temperature; standard test pressure is 200 psig and maximum test pressure is 300 psig. These conditions exceed those that could occur during any operating conditions. The casings are made from cast iron (ASTM A48); this metal has corrosion-erosion resistance and produces sound casings. Corrugated metal expansion joints are installed close to the pump suctions and discharges. These joints isolate the pumps from forces and moments originating in the connected piping; in addition, the pumps are designed as Class I. Pumps are missile-protected and may be inspected at any time. Rupture by missiles is not considered credible. A relief valve is installed on the line supplying makeup to the system, so that makeup source pressure cannot be applied to the casings. All units can be isolated by valves, and the standby pump can carry full load.
2. Component cooling water pumps	Original pump fails to start	Standby pump for that reactor unit can be used.
3. Component cooling water pumps	Standby pump fails to start	Standby pump for other reactor unit can be started manually in control room, after manually repositioning valves at the pumps.
4. Component cooling water pumps	Manual butterfly valve at a pump suction closed	Prevented by pre-startup and operational checks. During normal operation, each pump is checked periodically, together with its valves.
5. Component cooling water pumps	Check valve at a pump discharge sticks closed	Valve is checked periodically during normal operation.
6. Check valves in supply mains at inlet penetrations	Sticks closed	One main is flowing at all times. The valves have split disks loaded by light springs, and sticking closed is not considered credible.
7. Component cooling water heat exchangers	Tube or shell ruptures	Because of the low system operating pressure and temperature, and Class I design, rupture is considered unlikely. Each unit can be isolated and can carry full load. The standby unit intended for one reactor unit may be used for the other unit by repositioning valves. The exchangers are protected from missiles.

Table 9.4-8 (continued)
CONSEQUENCES OF COMPONENT COOLING WATER SYSTEM MALFUNCTIONS

Components	Malfunction	Comments and Consequences
8. Component cooling water heat exchanger vent or drain valve	Left open	Prevented by pre-startup and operational checks. On a unit in service, this condition would be noted by operating personnel during routine observation. On activation of a standby unit, the condition would be observed by personnel engaged in manually positioning valves at the exchanger.

Table 9.4-9
COMPONENT COOLING WATER RELIANCE ON INTERCONNECTED SYSTEMS

Interconnected System	Purpose of Interconnection	Consequences If Interconnection Is Lost
Main condensate (in turbine room)	Makeup for surge tank	The makeup line is double-connected to both main turbine generator units. A tie-in from the bearing cooling makeup pump also exists. Since it is unlikely that both units will be out of service simultaneously along with bearing cooling make-up, the source has a high degree of redundancy. If a loss of offsite power has occurred and makeup is required, a portable pump can be connected to fulfill this function.
Boron recovery	Signals to automatic control valves in component cooling water system piping	None; use of equipment is intermittent.
Sampling	Conduct sample to central sampling station	None; samples at all important points may be collected at local sampling connections in the piping.
Vent and drain	Disposal of equipment vents and piping drains	Since lines are open, without valves or other devices, loss of the interconnections is not considered credible.
Containment isolation	Signals to trip valves for isolation purposes, under accident conditions	Valves fail safe (to closed position) upon loss of signal.

Table 9.4-10
CHILLED COMPONENT COOLING WATER SYSTEM COMPONENT DESIGN DATA

Chilled Component Cooler		
Number	3 (one for each unit, one common to both units)	
Duty, each	3,600,000 Btu/hr	
	Shell	Tube
Design pressure	150 psig	150 psig
Design temperature	150°F	150°F
Operating pressure	60 psig	60 psig
Operating temperature, in/out	80/70°F	60/66°F
Materials	Carbon steel	Admiralty
Fluids	Component cooling water	Chilled water
Design code	ASME III Class C	ASME III Class C
Chilled Component Cooling Pumps		
Number	3 (one for each unit, one common to both units)	
Type	Horizontal centrifugal, single stage	
Motor horsepower	50 hp	
Seal	Mechanical	
Head at rated capacity	187.5 ft	
Design pressure	250 psig	
Design temperature	250°F	
Materials		
Pump casing	Cast iron	
Shaft	Carbon steel	
Impeller	Cast iron	

Figure 9.4-1
COMPONENT COOLING WATER SYSTEM

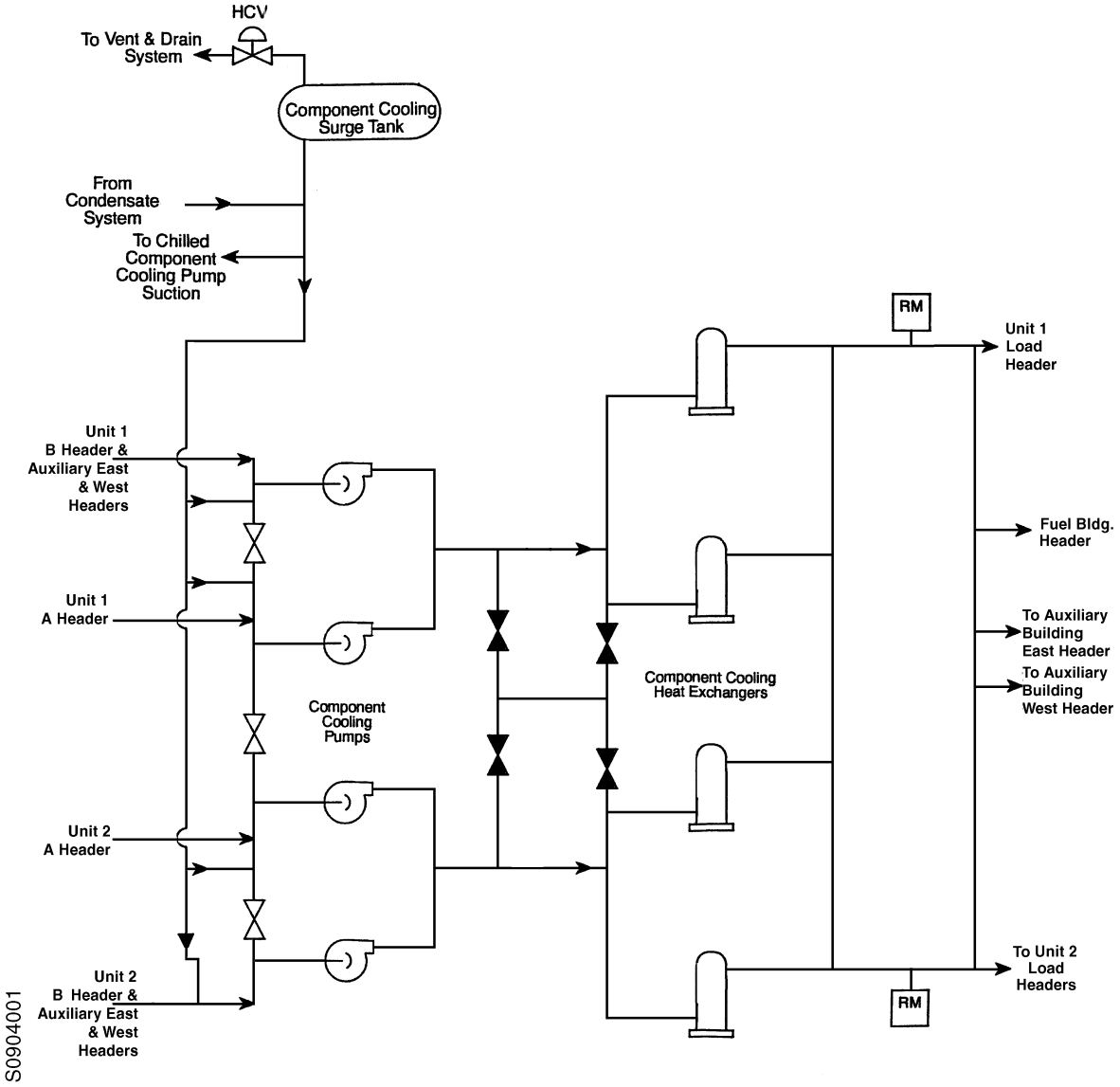

Figure 9.4-2
CHILLED COMPONENT COOLING WATER SYSTEM

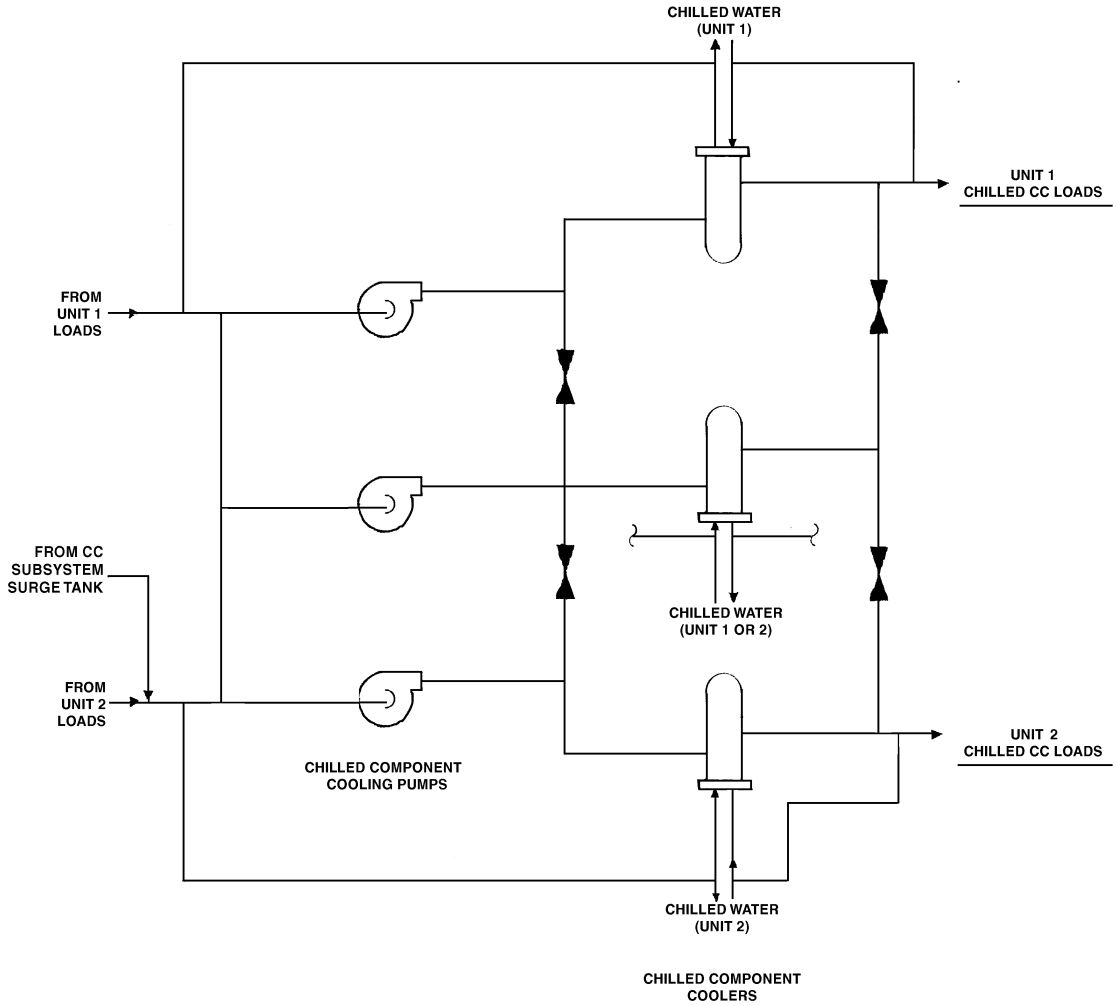

Figure 9.4-3
CHILLED WATER SYSTEM

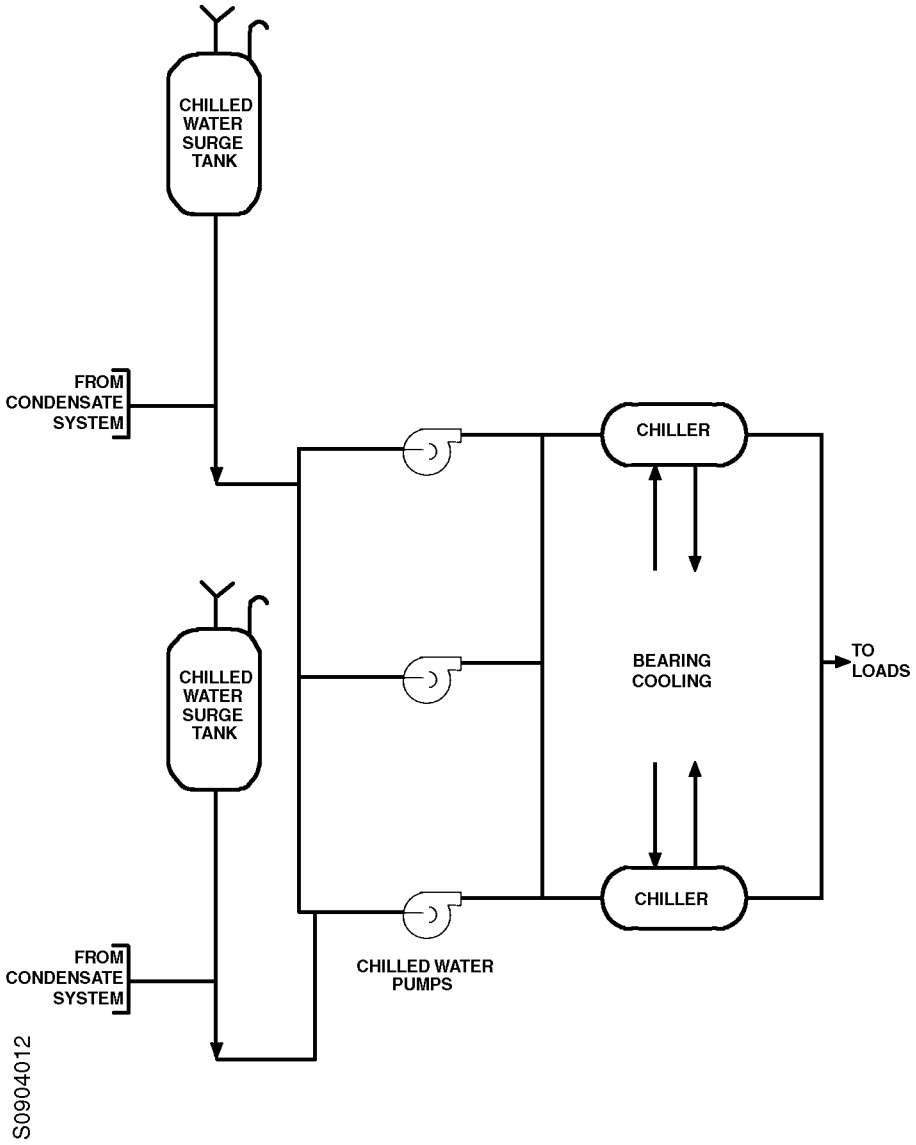

Figure 9.4-4
NEUTRON SHIELD TANK COOLING WATER SYSTEM

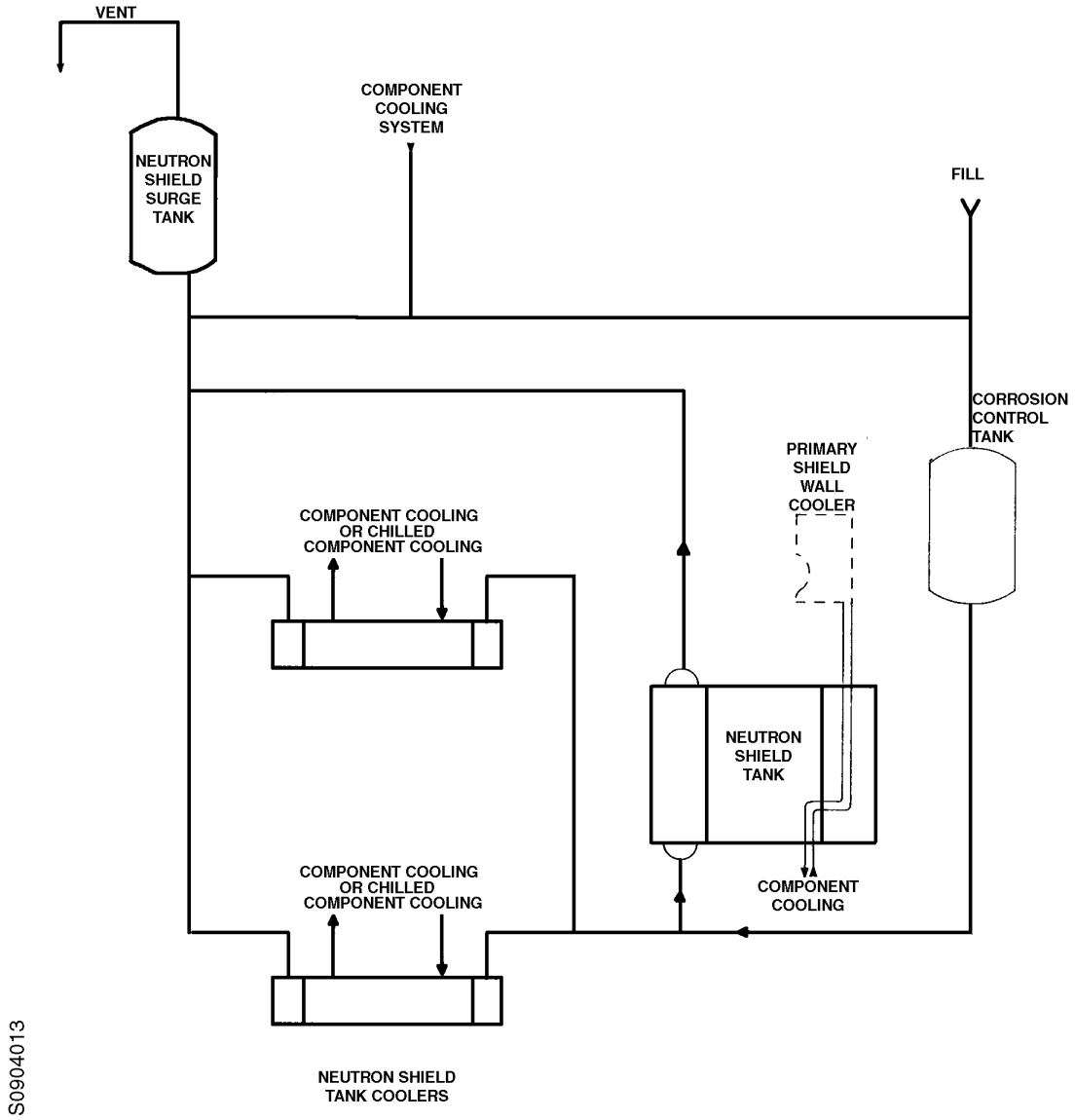

Figure 9.4-5
CHARGING PUMP COMPONENT COOLING WATER SYSTEM

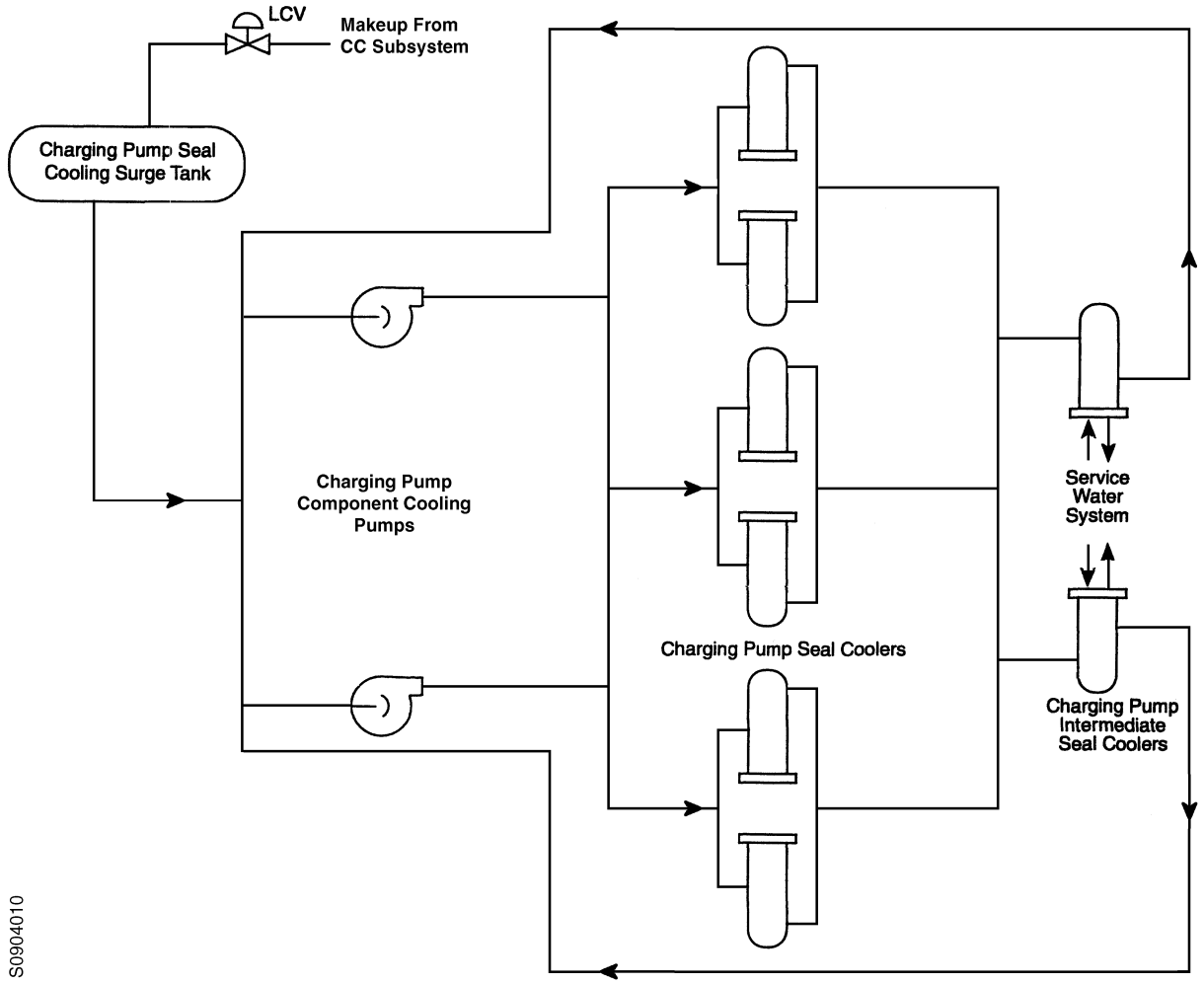

9.5 FUEL POOL COOLING SYSTEM

The fuel pool cooling system shown in Figure 9.5-1 and Reference Drawing 1 pumps borated water from the spent-fuel pool through heat exchangers and back to the pool to maintain fuel pool water temperature. Additional pumps are provided for purification through an ion exchanger and filter and for surface clarification. A review of the effects of the power uprate to a core power of 2546 MWt was conducted and the fuel pool cooling system was found to be adequate.

9.5.1 Design Bases

The Fuel Pool Cooling System has the capability to:

1. Maintain the temperature of the fuel pool water below 140°F during a normal core offload condition commencing 100 hours after shutdown. A normal core offload condition is a planned offload of up to a full core. The most limiting condition for normal core offload is a full core offload following refueling of the other unit.
2. Maintain the temperature of the fuel pool water below 170°F during an abnormal core offload condition commencing 100 hours after shutdown. An abnormal core offload is an unplanned offload of up to a full core. The most limiting condition for an abnormal core offload is an unplanned full core offload following back-to-back refuelings of both units.

The fuel pool cooling system is designed as a Seismic Class I system and consists of two complete cooling loops, each of which has a design water flow rate of 4200 gpm. Each loop can remove about 34×10^6 Btu/hr while maintaining the fuel pool outlet water temperature at 170°F, assuming that the component cooling water system, which is the heat sink, is at a temperature of 105°F.

The fuel pool water temperature is continuously indicated in the control room, and an alarm in the control room alerts the operator prior to this temperature reaching 140°F. There are also indicators in the control room to inform the operator when either or both of the fuel pool cooling pumps are operating.

The fuel pool cooling system is also designed to maintain the clarity of the refueling water to permit observation of fuel element placement during refueling operations. The system also maintains a minimum pool water level of 41 ft. 2 in., which will provide a minimum water shield of 20 feet in depth (Section 11.3).

The design data for the fuel pool cooling system components are given in Table 9.5-1.

9.5.2 System Description

The fuel pool cooling system has two shell and tube coolers, two circulating pumps (4200 gpm), and two full-size purification pumps (150 gpm), all located in the fuel building. The

coolers and pumps are arranged for cross-connected operation. The coolers are cooled with component cooling water.

The purification pumps take suction at the outlet of the fuel pool coolers and pump water to a 45-ft^3 ion exchanger and filter located in the auxiliary building. The ion exchanger or the filter can be bypassed if not required. The water returns to the fuel pool at the far end opposite the suction point to ensure mixing. The surface of the water is kept clear of floating matter by two skimmers connected to two skimmer pumps (10 gpm). The pumps discharge to the skimmer filters, after which the water returns to the far end of the pool.

The purification system is operated independently of the cooling system, and remains in operation essentially continuously to maintain a clean, clear pool. The maximum allowable differential pressure across the purification filter is 25 psid. The maximum allowable differential pressure across the demineralizer (ion exchanger) is 25 psid. If the delta P exceeds the allowable value, the filter is replaced or the demineralizer resin is replenished.

The lowest level of pipe penetration through the fuel pool structure is 20 feet above the top of stored fuel elements.

9.5.2.1 **Components**

All piping, valves, and components of the fuel pool cooling system that come in contact with the fuel pool water are austenitic stainless steel.

9.5.3 Design Evaluation

9.5.3.1 **Availability and Reliability**

Two circulating pumps and two fuel pool coolers are provided to ensure system availability for meeting cooling requirements using the appropriate alignments of required pumps and coolers. For most normal conditions, the system capacity is sufficient to maintain pool temperatures below 140°F with one pump and one cooler. During refueling operations, flexibility exists to add the other cooler or the other cooling loop, as required to meet the existing heat load while maintaining the pool temperatures consistent with fuel handling operations. The design condition presenting the most limiting capacity for the system is the back-to-back refueling case. In this case, one pump and two coolers maintain the pool below 140°F, with restrictions on allowable Component Cooling water temperature (Section 9.5.3.4), leaving the standby pump to be placed in operation if the operating pump should malfunction. Sufficient cooling water is available to increase the system heat rejection capacity and maintain the pool below 170°F at the abnormal heat load with one pump and one cooler, if required. Redundant piping is provided from the fuel pool through the pumps and coolers to the main return header located above the pool water level.

9.5.3.2 **Purification of Water**

The 150-gpm filtering rate of the purification system results in a refueling water cleanup half-life of 2 days, and maintains suspended solids at a low concentration for optical clarity. The skimmer filter removes particles that fall and float on the water surface. This reduces the amount of impurities that enter the water and also reduces surface refraction.

The fuel pool purification system removes both radioactive and nonradioactive particulates from the pool water. The purity of water is normally maintained between 0.0 to 0.3 ppm, with a maximum particulate concentration of about 0.4 ppm. This purity level provides sufficient optical clarity for refueling operations. Based on samples taken since station start-up, the major isotopes that have been detected in the pool water, with approximate concentrations, are listed in Table 9.5-2.

Crud buildup along the sides of the fuel pool has not significantly affected the radiation levels at the edge of the pool. Crud buildup on the sides of the pool is removed with hydrogen peroxide (H_2O_2).

9.5.3.3 **Fuel Pool Water Leakage Control**

Slow leakage of water from any point in the piping or components of the cooling or purification systems can be stopped by valves mounted close to the pool penetrations. An alarm is provided on the pool to sound at a level loss of approximately 0.5 foot; this provides ample time to isolate the leaking equipment. Further, a large piping system leak can reduce the water level in the pool to only 4 feet below normal, since at this elevation the water level is below the pipe penetrations in the pool wall. This minimum water level ensures at least 20 feet of water over stored fuel and provides ample shielding and cooling.

9.5.3.4 **Heat Load**

At Surry a single spent fuel pool provides storage of irradiated fuel assemblies for both units. For normal refueling operations, a full core offload of one unit following a refueling of the other unit represents the most limiting spent fuel pool heat load. For this back-to-back refueling condition the assumption is made that as soon as one unit has completed refueling, the second unit begins its refueling outage. This results in the most recently discharged batch of fuel prior to the current refueling having a decay time of 28 days.

The offload of the core for the current refueling is assumed to begin at 100 hours after shutdown and finish at 130 hours after shutdown. The 30 hours assumed for off-loading of the core is conservative with respect to actual practice.

The heat load from the irradiated fuel in the pool prior to these refuelings is accounted for through a cumulative decay heat load determined from successive refueling discharges decayed for 1.5 to 10.5 years. At this time the pool would be full except for a full core discharge capability (157 storage cells).

The back-to-back refueling scenario results in a heat load on the spent fuel pool cooling system of 37.5×10^6 Btu/hr. At this heat load the spent fuel pool cooling system can maintain the pool temperature below 140°F with one pump and two coolers in operation and the component cooling water supply temperature at a maximum of 97°F.

The most limiting spent fuel pool heat load for abnormal core offload is determined by assuming an unscheduled shutdown of the first unit which requires a full core offload after the second unit has gone back on-line following back-to-back refuelings. The heat load is conservatively determined assuming the most recently discharged fuel batch has a decay time of 28 days, the next most recently discharged batch has a decay time of 56 days, and the core being off-loaded to have operated for a sufficient length of time to produce maximum decay heat prior to being transferred to the pool by 130 hours after shutdown of the unit. The heat load from the irradiated fuel in the pool prior to the refuelings is accounted for through a cumulative decay heat load determined from successive refueling discharges decayed for 1.5 to 10.5 years. The abnormal condition also assumes that the unscheduled full core offload completely fills the pool. This results in a heat load of 40.8×10^6 Btu/hr placed on the spent fuel pool cooling system. The capability of the spent fuel pool cooling system is more than sufficient to maintain the pool temperature below 170°F with the component cooling water supply temperature at 105°F through the use of one pump and two coolers.

The design flow rate of the component cooling water through the shell side of each fuel pool heat exchanger is 1322 gpm. The actual flow rate is controlled based on cooling water temperature and the fuel pool water temperature. The component cooling water system is discussed in Section 9.4.

9.5.3.5 Malfunction Analysis

The consequences of the malfunction of various fuel pool cooling system components are described by Table 9.5-3.

9.5.4 Tests and Inspection

The fuel pool level and temperature instrumentation are calibrated on a periodic basis. Periodic visual inspections and preventive maintenance are conducted on all system components. Periodic sampling of fuel pool water is conducted.

9.5 REFERENCE DRAWINGS

The list of Station Drawings below is provided for information only. The referenced drawings are not part of the UFSAR. This is not intended to be a complete listing of all Station Drawings referenced from this section of the UFSAR. The contents of Station Drawings are controlled by station procedure.

	Drawing Number	Description
1.	11448-FM-081A	Flow/Valve Operating Numbers Diagram: Fuel Pit Systems

Table 9.5-1
FUEL POOL COOLING SYSTEM COMPONENT DESIGN DATA

Fuel Pool Coolers		
Number	2	
Design duty, each	34,750,000 Btu/hr	
	Shell	Tube
Fluid flowing	Component cooling water	Fuel pool water
Design pressure	150 psig	100 psig
Design temperature	200°F	200°F
Operating temperature, max	157°F outlet	170°F inlet
Operating pressure	60 psig	40 psig
Material	Carbon steel	SS 304
Design code	ASME III, Class C	ASME III, Class C
Spent-Fuel Pool Pumps		
Number	2	
Type	Horizontal centrifugal	
Motor horsepower	100 hp	
Seals	Mechanical	
Capacity	4200 gpm	
Head at rated capacity	62 ft	
Design pressure	100 psig	
Design temperature	250°F	
Materials		
Pump casing	SS 304	
Shaft	SS 316	
Impeller	SS 304	
Purification Pumps		
Number	2	
Type	Horizontal centrifugal	
Motor horsepower	20 hp	
Pump capacity	150 gpm	
Seals	Mechanical	
Head at rated capacity	198 ft	
Design pressure	225 psig	
Design temperature	250°F	
Materials		
Pump casing	SS 316	
Shaft	SAE 4140	
Impeller	SS 316	

Table 9.5-1 (continued)
FUEL POOL COOLING SYSTEM COMPONENT DESIGN DATA

Fuel Pool Filter	
Number	1
Retention size, max	5μ
Filter element capacity, normal/max	150/150 gpm at 5 psi ΔP
Material	SS 304
Design pressure	150 psig
Design temperature	250°F
Design code	ASME III, Class C
Skimmer Pumps	
Number	2
Type	Horizontal centrifugal
Motor horsepower	1 hp
Seal	Single mechanical
Capacity	10 gpm
Head at rated capacity	30 ft
Design pressure	150 psig
Design temperature	170°F
Materials	
Pump casing	SS 316
Shaft	SAE 4140
Impeller	SS 316
Fuel Pool Ion Exchanger	
Number	1
Active volume	45 ft^3
Design pressure	200 psig
Design temperature	250°F
Demineralizer resin	50/50 cation-anion
Materials	SS 316 L
Design code	ASME III, Class C
Skimmer Filter	
Number	2
Retention size filter element	10μ
Capacity	10 gpm at 2 psi ΔP
Material	SS 316
Design pressure	150 psig
Design temperature	170°F
Fuel Pool Cooling Piping and Valves	
Materials	Austenitic stainless steel
Design code	ANSI B31.1

Table 9.5-2
MAJOR ISOTOPES DETECTED IN FUEL POOL WATER

	Concentration (μCi/ml)		
Isotope	Normal	Maximum	Minimum
Cs-134	0	1.2×10^{-4}	0
Cs-137	10^{-4} to 10^{-5}	1.3×10^{-4}	0
Co-58	10^{-3} to 10^{-4}	1.5×10^{-3}	6.6×10^{-4}
Co-60	10^{-3} to 10^{-4}	1.1×10^{-3}	4.8×10^{-4}
I-131	0	6.5×10^{-5}	0
Gross activity	10^{-3} to 10^{-5}	1.1×10^{-3}	5.0×10^{-5}

Table 9.5-3
MALFUNCTION ANALYSIS

Component	Malfunction	Comments and Consequences
Spent-fuel pool pumps	Pump fails to start, or fails during operation	The redundant cooling loop would remain operational. The operator in the control room would be alerted of the failure by pump status light and/or temperature alarm and the redundant pump would be manually started and placed in service. In the event the operating pump stops, over 1 hour is available before the pool water heats up 10°F; therefore, a number of hours would be available to start the spare pump. The failed pump would be repaired and returned to service. Furthermore, power to both pumps is supplied from station emergency buses.
Fuel pool coolers	Loss of function	Although a passive failure of this type would not cause a loss of function, e.g., leaks might occur, the redundant cooler could be placed in service while the failed cooler is repaired. As with the pump, sufficient time is available to manually realign the coolers.
Pumps, coolers, piping, valves, and other components	Leaks of any size	A slow leak (less than 100 gpm) will permit over 2 hours to isolate the leak before loss of 1 foot of water. A large leak can only reduce water to the lowest pool penetration, which is at a level to ensure adequate shielding.

Figure 9.5-1
FUEL POOL COOLING SYSTEM

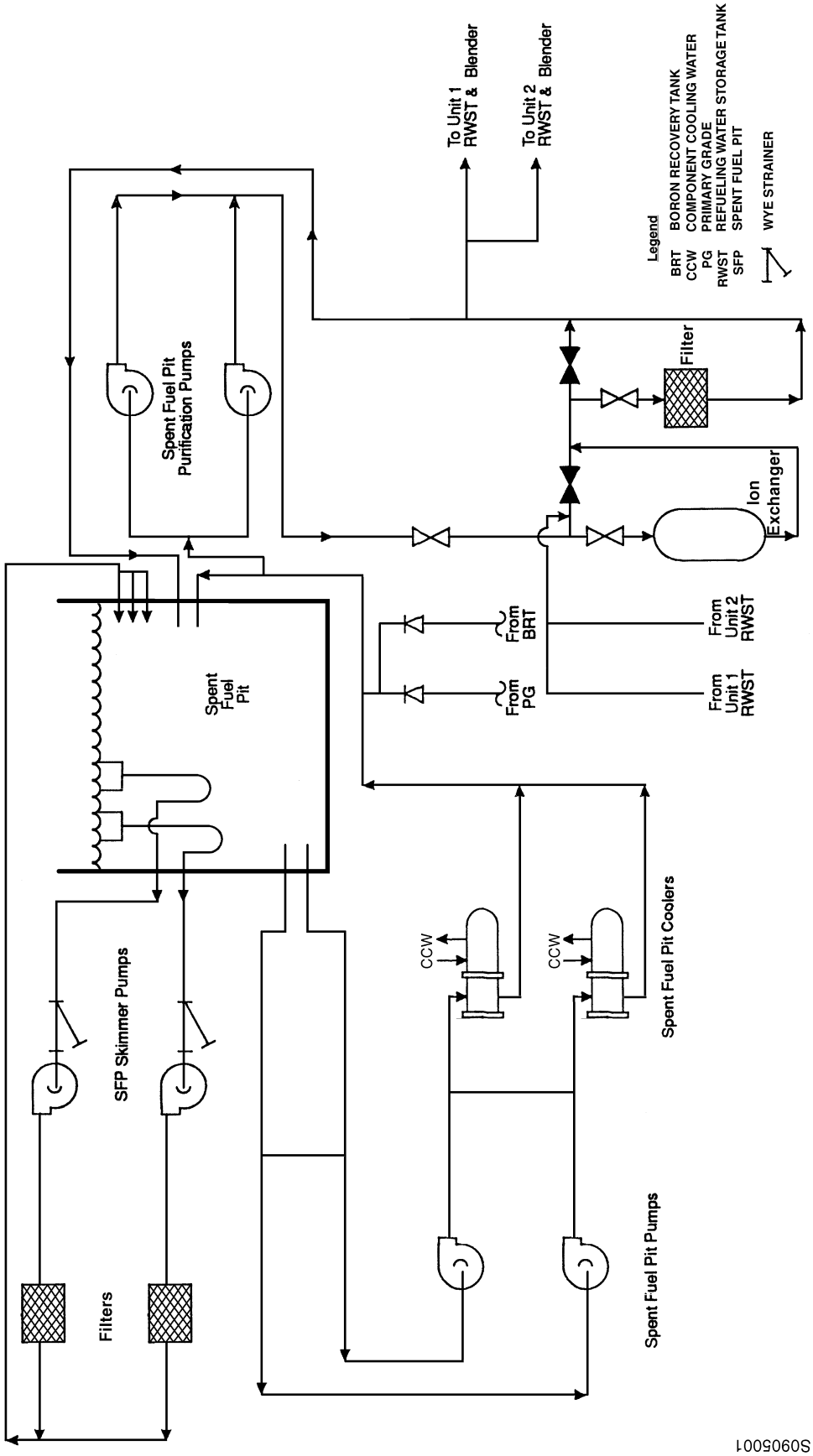

9.6 SAMPLING SYSTEM

The station sampling systems provide for obtaining samples from primary and secondary plant systems, as well as for obtaining post-accident samples should they be required. Chemistry sampling of various process fluids and gases ensures that (1) fuel element failures are promptly detected, (2) plant systems are functioning properly, (3) corrosion is being adequately controlled, and (4) samples are available for determining certain post-accident system conditions, if required. The primary and secondary plants are sampled routinely. Data from the sample systems throughout the plant are relied upon for daily operations, as well as to provide assessment information in the event of a fuel element failure of a design basis accident.

9.6.1 Design Bases

9.6.1.1 Sampling System—Routine Operation

Process fluids and gases are representatively sampled for testing to obtain data from which performance of the station, equipment, and systems may be determined.

Routine samples of process fluids and gases associated with both the primary and secondary systems are either taken periodically or are continuously monitored. Two general types of samples are obtained by the sampling system: high-temperature samples (greater than 150°F) such as the reactor coolant system samples, and low-temperature samples (less than or equal to 150°F) such as the high-level waste drain tank samples. Various samples taken are listed in Table 9.6-1.

Primary samples are analyzed to determine the amount of radioactivity in the reactor coolant. If the radioactivity level is high, a reactor coolant sample is analyzed for iodine and other isotopes and counted as an indication of defects in fuel cladding. The frequency of sampling for gross activity and for radiochemical analysis of the reactor coolant is given in the Technical Specifications.

9.6.1.2 High Radiation Sampling System—Post-Accident Operation

The High Radiation Sampling System (HRSS) is no longer required for post accident sampling and has been removed from the Surry Power Station Technical Specifications but is maintained to provide contingency measures in accordance with Reference 1. Surry Power Station contingency measures are being provided by maintaining portions of the HRSS to facilitate acquiring diluted and non-diluted samples of the RCS, containment sump, and containment atmosphere. These samples can then be analyzed on site or sent off site for analysis. Station procedures control the sampling and analysis evolutions. The in-line analysis capability of the HRSS is no longer required for timely analysis of post-accident samples and will not be maintained. The system is designed to obtain and analyze representative samples of reactor coolant, the containment atmosphere, and the containment sump after an accident. Sampling and analysis of reactor coolant and containment atmosphere samples can provide information needed to assess and control the course of recovery from an accident. The system provides the ability to obtain grab samples from each reactor coolant hot leg, each reactor coolant cold leg, the residual

heat removal system, the chemical and volume control system mixed-bed demineralizer effluent, containment sump, and the containment atmosphere. The system has the capability to cool and depressurize samples at high temperature and high pressure to allow grab sampling and in-line chemical analysis; however, in-line chemical analysis is no longer performed.

The system also provides the means to remotely dilute reactor coolant and containment sump samples by a factor of 1000 to reduce the personnel exposure levels that would otherwise be associated with post-accident sampling. This initial dilution also reduces the exposure that would be associated with subsequent manual dilutions, if required.

The diluted and undiluted liquid grab samples and the containment air samples are put into specially designed transfer carts with integral shielding. Placement of the samples inside the shields can be accomplished with minimal operator exposure because the cart is integrally designed to nest within the sample panel. The transfer carts facilitate movement to designated areas for isotopic or chemical analysis with low operator exposure.

The sampling system has the ability to strip reactor coolant of dissolved gases for grab sampling and analysis.

An in-line chemical analysis panel is no longer used but was designed to facilitate remote measurement of important chemical parameters with a minimum of manual action or exposure to the operator. This chemical analysis panel has the capability to measure primary coolant pH, boron, oxygen concentration, and hydrogen concentration, as well as containment hydrogen concentration. The capability for in-line chloride measurement utilizing a portable ion chromatograph is also provided. Each parameter (except chloride) is either indicated or recorded on a remote-control panel located in the cable spreading room.

The high radiation sampling system panels are located within existing space in the auxiliary building. The reactor coolant is drawn from sample system lines outside of containment, upstream of the normal sample system coolers.

Controls are provided to prevent post-accident samples from being inadvertently introduced to the normal sample room.

Sample liquid resulting from recirculation, purging, and drainage can be routed to the high radiation sampling system waste tank, from which the fluid can be pumped or displaced with nitrogen back to the containment sump. Connections are provided to recirculate, purge, and drain non-accident liquid samples via normal sample system flow paths for purposes of operator training and periodic equipment testing.

The containment atmosphere sample panel has the capability to take suction from within the hydrogen monitor system. Motive force for the containment atmosphere sample panel is provided by an integral nitrogen eductor. The discharge of the containment atmosphere panel is routed back to the containment via the high radiation sampling system waste tank and evacuating compressor.

9.6.2 Description

9.6.2.1 Sampling System—Routine Operation

The sample lines coming from within the containment contain high-temperature samples, with the exception of the pressurizer relief tank sample. Where two or more samples join into a common header (i.e., the primary coolant cold-leg samples), each individual sampling line has a solenoid-operated valve in the line that can be remotely operated from a control board in the auxiliary building sampling room. The primary coolant hot-leg and cold-leg samples flow through delay coils before penetrating the containment. These delay coils permit sufficient decay of nitrogen-16 so that these samples can be handled in the sampling room.

Sample lines penetrating the containment have two automatically operated valves in the line, one just inside and one just outside the containment. These trip valves close on receipt of a safety injection signal. Samples may also be obtained from interfacing systems (e.g., gaseous waste) which have containment isolation valves that may be operated under administrative control in accordance with Technical Specifications. The high-temperature samples pass through sample coolers located in the auxiliary building sampling room. These coolers cool the high-temperature samples to a temperature low enough for safe handling. Sample flows leaving the cooler are manually throttled and can be directed to a purge line or to the sampling sink. The pressurizer vapor space samples, in addition, pass through capillary tubes that limit the flow of steam.

The sampling lines from sampling points outside the containment but inside the auxiliary building also discharge to the auxiliary building sampling sink. Sample lines from sampling points in the turbine building discharge to one of the turbine building sample sinks. The high-temperature samples also pass through sample coolers and are manually throttled. In general, samples can either be directed to a purge line or to the sampling sink. The main steam samples also pass through capillary tubes.

The purge flows of the various samples are discharged to the volume control tank, the vent and drain system, or elsewhere, as appropriate. The radioactive samples in the auxiliary building sampling room discharge into hooded sampling sinks.

The on-line chemistry monitoring system (OLCMS) provides continuous monitoring from four main sample locations in the secondary system (feedwater, steam generator blowdown, main steam and condensate) and from two supplemental sample locations (condensate make-up and moisture separator reheater/heater drains). Samples are cooled by primary coolers which use bearing cooling water. Samples flow to their respective conditioning and monitoring panels which are located in the Units 1 and 2 turbine building basements. Output signals from the sample panel monitors and analyzers go to an I/O data controller for input to an onsite computer. Selected signals go to recorders in the control room.

Radiation monitors in the steam generator blowdown sample line detect primary-to-secondary leaks in the steam generators. Monitoring of the condensate pump discharge is used to detect tube leaks in the condensers.

9.6.2.2 **High Radiation Sampling System—Post-Accident Operation**

Representative post-accident liquid and gas samples from either reactor unit can be routed to one common high radiation sample system. Samples can be received from the sources listed in Table 9.6-2. The tie-in locations for all reactor coolant samples are outside the containment, upstream of the sample system coolers. Since the reactor coolant sample lines are combined into common headers inside containment, one common hot-leg sample and one common cold-leg sample for each unit is routed to the high radiation sampling system liquid sample panel.

The motive force for all reactor coolant samples is primary system pressure. A containment sump pump, appropriate for its service duty, is provided to obtain containment sump samples. The motive force for a containment atmosphere sample is provided by a nitrogen eductor contained within the containment air sample panel.

The high radiation sampling system is designed so that incoming liquid sample lines can be purged to ensure that the grab samples are representative. The line volumes will be purged several times during this operation. During post-accident conditions, primary system liquid samples are purged directly to the high radiation sampling system waste tank. The associated waste pumps can then transfer the accumulated liquid waste to the appropriate containment sump. For system test and operator training, liquid samples can be recirculated via the normal sample pathways to the appropriate volume control tank or high-level drain tank purge headers.

The high radiation sampling system is comprised of five subsystems.

These are:

1. Liquid sample panel and coolers.
2. Containment atmosphere sample panel.
3. Chemical analysis panel (use of this subsystem has been discontinued).
4. Waste tank and pump.
5. Process control panel.

9.6.2.2.1 Liquid Sample Panel and Coolers

The liquid sample panel and coolers perform multiple functions:

1. Sample cooling to about 135°F during the recirculation mode and about 120°F during the grab sample mode.
2. Sample depressurization.

3. Liquid degassing to obtain a representative dissolved gas sample.
4. Liquid degassing to the extent necessary to allow in-line chemical analysis downstream in the chemical analysis panel (use of this subsystem has been discontinued).
5. Provide undiluted liquid grab sample inside a shielded transfer cask.
6. Provide diluted (1000 to 1) liquid grab sample inside a shielded transfer cask.
7. Provide diluted dissolved gas grab sample inside a shielded syringe.
8. Provide integral shielding to minimize operator exposure while working in front of the panel.
9. Provide a ventilated cabinet, held below atmospheric pressure, to contain potential subsystem leakage. Cabinet ventilation is connected to the auxiliary building HVAC system.

The liquid sample subsystem is divided into three modules, based upon the pressure of the incoming liquid. A reactor coolant module handles hot-leg, cold-leg, and residual heat removal system samples. A demineralizer module handles the chemical volume and control system mixed-bed demineralizer effluent samples. A radwaste module handles the containment sump samples.

The liquid sample subsystem contains provisions for flushing with station primary-grade water. The flush water is routed to the high radiation sampling system waste tank.

9.6.2.2.2 Containment Air Sample Panel

The containment air sample panel performs the following functions:

1. Provides the motive force to obtain a representative grab sample of containment atmosphere. A nitrogen eductor is provided that is capable of operation when the containment pressure is either slightly negative or at the maximum post-accident pressure.
2. Provides three shielded sample bombs and a gas partitioner device to obtain containment atmosphere samples on a preprogrammed timer sequence. The gas partitioner device is independently controlled and separates the containment air sample for particulate, iodine, and noble gas determination.
3. Provides a motive force by a nitrogen eductor to deliver containment air sample flow to the chemical analysis panel for atmospheric analysis to determine the hydrogen concentration.
4. Provides a means to purge and backflush containment air sample lines back to the affected containment.
5. Provides an integrally shielded panel front to minimize post-accident operator dose rates.
6. Provides a ventilated cabinet held below atmospheric pressure to contain potential subsystem leakage. Cabinet ventilation is connected to the auxiliary building HVAC system.

9.6.2.2.3 Chemical Analysis Panel

The in-line chemical analysis panel is no longer required for post accident sampling. The chemical analysis panel is no longer used but was designed to perform the following functions:

1. Accept a preconditioned, cooled, depressurized and degassed, liquid sample from the liquid sample subsystem for post-accident chemical analysis for boron, pH, dissolved hydrogen and dissolved oxygen, and hydrogen concentration in post-accident containment atmosphere samples.
2. Provide remote readout of chemical analysis panel parameters on the remote process control panel of the high radiation sampling system.
3. Provide an integrally shielded panel front to minimize post-accident operator dose rates.
4. Provide a ventilated cabinet held below atmospheric pressure to contain potential subsystem leakage. Cabinet ventilation is connected to the auxiliary building HVAC system.
5. Provide the necessary connections to connect a portable ion chromatograph for in-line chloride analysis of the reactor coolant.

Table 9.6-3 lists the types of instrumentation to be used for determination of post-accident chemical parameters; however, in-line chemical analysis is no longer performed. Instrumentation has been selected based upon the following criteria:

1. The ability to measure accurately the full anticipated range of parameters.
2. The ability to withstand high radiation fields.
3. The ability to reproduce results after calibration.
4. The ability to measure chemical parameters with small sample volumes.

The chemical analysis panel is designed with built-in instrument calibration equipment. Instrument calibration will be performed by station personnel on a periodic basis to maintain a ready condition and to minimize instrument drift.

9.6.2.2.4 Waste Tank, Pumps, and Evacuating Compressor

The waste tank and pumps have the ability to collect and return system purge and flush liquids to either containment or to the plant high level waste drain tank. The liquid sample purge return lines to the containment are routed to the containment sump. The waste tank is sized to hold the volume of liquid residue generated by the acquisition of two post-accident samples.

Two 100%-capacity waste tank pumps are provided to pump the tank contents back to the containment. A nitrogen purge connection is provided to force the contents of the tank back to the containment in the event of pump failure, and also to maintain a nitrogen blanket in the waste tank to preclude accumulation of hydrogen.

During post-accident conditions, the waste tank can be held under a slight vacuum by an evacuating compressor, and can be nitrogen-blanketed. An evacuating compressor is provided to maintain the tank under negative pressure. The evacuating compressor also discharges containment air samples which enters the waste tank from the containment air sample panel. A bleed and feed system will control the evacuating compressor and nitrogen purge flow. The evacuating compressor discharge can be directed to either containment.

Tables 9.6-4, 9.6-5, and 9.6-6 provide design data for the waste tank, the waste tank pumps, and the evacuating compressor, respectively.

9.6.2.2.5 Process Control Panel

The process control panel performs the following functions:

1. Provides remote location in the service building in a low dose rate area for operation of the high radiation sampling system remotely operated valves, with the exception of the routine sample system containment isolation valves, which are operated from the control room.
2. Provides space for chemical analysis panel instrument indicators and recorders.

The process control panel contains a complete system graphic display for the other four subsystems. A communication system is provided between the sample panel area in the auxiliary building, the process control panel in the service building, and the control room.

9.6.2.2.6 Instrumentation Application

The chemical analysis panel measured parameters are no longer used but were designed to indicate and record on the remote process control panel. Parameters measured were boron concentration, pH, dissolved oxygen, chloride, dissolved hydrogen, and containment air hydrogen concentration; however, in-line chemical analysis is no longer performed. Local flow and pressure indication are on the face of the liquid sample, containment atmosphere, and chemical analysis panels to enable the operator to manually align and adjust system flows.

The process control panel permits remote operation of the high radiation sampling system automatic valves, including those routine containment sample system valves, which are normally operated from a panel in the routine sample room.

The maximum postulated activity concentration of post-accident samples is far in excess of the capabilities of normal counting equipment and geometries. Thus, sample dilution will be required prior to analysis. The liquid sample subsystem provides a 1000 to 1 dilution of reactor coolant samples. However, depending upon the accident condition, additional final dilution can be accomplished in a shielded fume hood. The diluted sample can then be analyzed by existing laboratory counting equipment.

The liquid sample subsystem can provide a shielded syringe sample of diluted reactor coolant gases that can also be further diluted, if necessary, in the adjacent shielded fume hood. These samples can then be analyzed in existing laboratory counting equipment.

The containment atmosphere samples are collected in 5 cc shielded sample casks in the containment atmosphere sample panel. Samples of 1 ml will be isotopically analyzed by a Ge detector, which measures through a 0.25-inch aperture in the sample vessel lead shield. The shield apertures are designed to allow measurement in several orientations. Halides and noble gases can be analyzed together. Successive analyses of containment air samples collected on a known time sequence enable the operator to determine the extent of the accident and the effectiveness of the containment spray system.

A particulate, iodine, and gas sample is connected to and operates in conjunction with the containment air sample panel. This device separates the containment air into components for analysis in the laboratory.

Design conditions of the various sampling panels are given by Table 9.6-7.

9.6.3 Design Evaluation

9.6.3.1 Sampling System—Routine Operation

If a critical sampling line becomes nonfunctional due to some malfunction, there is at least one alternate path that can be used to obtain a similar periodic sample, or for continuous monitoring. If one of the steam generator blowdown radiation monitors malfunctions, a second similar radiation monitor in each unit can be used. If one of the steam generator blowdown sampling lines becomes inoperative, the condenser air ejector radiation monitor provides indication of a steam generator primary-to-secondary-side leak.

9.6.3.2 High Radiation Sampling System—Post-Accident Operation

The high radiation sampling system equipment is designated Quality Group D, non-seismic, as defined in Regulatory Guide 1.26. Seismic failure will not damage station safety-related equipment or the building structures. Electrical power supply is from the station service buses. In the event of a loss of normal power, a manual selector switch is used to provide power from the opposite unit.

The air-operated trip valves in the residual heat removal sample lines and the reactor coolant system hot-leg and cold-leg sample lines have been replaced with direct-acting solenoid valves. This ensures that the valves can be reopened to draw the sample, under the single-failure criterion after an accident. The air-operated valves that are required to operate in order to obtain the reactor coolant sample are furnished with dedicated instrument air accumulators so that the ability to open the valves remotely will be available in the event that the station instrument air system is

temporarily nonfunctional. System interlocks are provided throughout to perform the following basic functions:

1. To ensure that samples obtained after an accident can only be returned to the affected containment. A similar philosophy is applied to system purge and flush fluids.
2. To ensure that post-accident sample fluid cannot inadvertently enter the routine sample system.

Permanent system connections to the station nitrogen system are provided, along with a nitrogen bottle backup system.

Redundant waste tank pumps are provided to pump post-accident samples back to the affected containment. Nitrogen can be used to empty the waste tank in the event of dual pump failure or loss of electric power.

System flush water is obtained from the station's primary grade water system. Primary-grade water connections to the system are quick-disconnect type. After each use of flush water, the system will be disconnected to minimize the possibility of primary-grade water contamination by post-accident samples. Each sample acquisition will be followed by a flush to keep background radiation levels to a minimum, in accordance with the ALARA concept.

A shielding analysis has been performed to ensure that operator exposure while obtaining and analyzing a post-accident sample will be less than 5 rem whole-body and 75 rem to the extremities. Operator exposure will be accumulated while entering and exiting the sample panel area, operating sample panel manual valves, positioning the grab sample into the shielded transfer carts, and performing additional manual sample dilutions, if required, for isotopic analysis. The major sources of operator exposure are from:

1. General auxiliary building background from components not associated with the high radiation sampling system. Operator exposure is limited by the stay time associated with sample panel manual operations, and by selecting entrance and exit routes to the sample room via the lowest dose rate paths.
2. Direct radiation from sample lines that are routed behind the shielded sample and analysis panels. Operator exposure is limited by the integral shielding located in the front of each of the system sample analysis panels. This shielding consists of up to 6 inches of lead shot poured into panel front sections.
3. Backscatter from the walls and roof behind and above the shielded sample and analysis panels. Operator exposure is limited by positioning the panel in an orientation such that the distance from the back of the panel to the nearest wall is maximized to the greatest extent practicable. A shadow shield is provided above the normal operator area.

9.6.4 Tests and Inspections

9.6.4.1 Sampling System—Routine Operation

Most components are used regularly during power operation, cooldown, and/or shutdown, thus providing assurance of the availability and performance of the system. The continuous monitors are periodically tested, calibrated, and checked to ensure proper instrument response and operation of alarm functions.

9.6.4.2 High Radiation Sampling System—Post-Accident Operation

The high radiation sampling system is no longer required for post accident sampling and the system has been removed from Surry Power Station Technical Specifications. However, the system remains in place and available, and portions of the system will be maintained to provide contingency sampling measures. Station personnel are trained on the system to ensure familiarity with and to test the functions and operations of the system that are required for use as contingency sampling measures. The chemical analysis instrumentation is no longer used, therefore calibration and testing of this portion of the system is no longer required.

9.6 References

1. License Amendments 229 and 229 to Facility Operating License Nos. DPR-32 and DPR-37.

9.6 REFERENCE DRAWINGS

The list of Station Drawings below is provided for information only. The referenced drawings are not part of the UFSAR. This is not intended to be a complete listing of all Station Drawings referenced from this section of the UFSAR. The contents of Station Drawings are controlled by station procedure.

	Drawing Number	Description
1.	11448-FM-082A	Flow/Valve Operating Numbers Diagram: Sampling System, Unit 1
	11548-FM-082A	Flow/Valve Operating Numbers Diagram: Sampling System, Unit 2
2.	11448-FM-082B	Flow/Valve Operating Numbers Diagram: Sampling System, Unit 1
3.	11448-FM-082C	Flow/Valve Operating Numbers Diagram: Sampling System, Unit 1

Table 9.6-1
SAMPLING SYSTEM ROUTINE SAMPLES

I. High-Temperature Samples from Each Unit

1. Pressurizer vapor.
2. Pressurizer liquid.
3. Residual heat removal liquid taken downstream of the residual heat removal pumps.
4. Residual heat removal liquid taken downstream of residual heat exchangers.
5. Hot-leg primary coolant taken from each of the reactor coolant loops.
6. Cold-leg primary coolant taken from each of the reactor coolant loops.
7. Steam generator blowdown liquid taken from each of the blowdown lines.
8. Main steam taken from each of the main steam lines.
9. Steam generator feedwater.
10. Moisture separator reheater/heater drains.

II. High-Temperature Samples Common to Both Units

1. Auxiliary heating de-aerator.
2. Auxiliary heating boiler lower drum.
3. Auxiliary heating boiler steam drum.
4. Radwaste facility liquid waste evaporator.
5. Radwaste facility evaporator concentrates.

III. Low-Temperature Samples from Each Unit

1. Supply header to chemical and volume control system demineralizers.
2. Chemical and volume control system cation demineralizer effluent.
3. Condensate pump discharge header.
4. Chemical and volume control system de-borating demineralizers effluent.
5. Chemical and volume control system mixed-bed demineralizer effluent.
6. Volume control tank liquid.
7. Volume control tank gas space.
8. Pressurizer relief tank gas space.
9. Condensate makeup demineralizer effluent.

Table 9.6-1 (continued)
SAMPLING SYSTEM ROUTINE SAMPLES

IV. Low-Temperature Samples Common to Both Units

1. Low-level waste drain tanks liquid.
2. Boron recovery system test tanks liquid.
3. High-level waste drain tanks liquid.
4. Boron recovery tanks liquid.
5. Component cooling water.
6. Primary drain tank liquid.
7. Gas stripper liquid effluent.
8. Primary-water tanks.
9. Contaminated drains collection tanks.
10. Waste disposal evaporator test tanks. (Installed but no longer used)
11. Gas stripper surge tank gas.

V. Radwaste Facility Samples

1. Liquid waste collection tanks.
2. Liquid waste surge tanks.
3. Liquid waste monitor tanks.
4. Laundry waste monitor tanks.
5. Waste batch tanks.

Table 9.6-2
HIGH RADIATION SAMPLING SYSTEM SAMPLE POINTS

Sample Source	Number of Sample Points For Each Reactor
Reactor Coolant	
Hot leg	4 locations[a]
Cold leg	3 locations[a]
RHR loop	2 locations[a]
CVCS mixed-bed demineralizer outlet	1 location
Containment sump	1 location
Containment atmosphere	1 location

a. One common header from outside the containment is routed to the high radiation sampling system

Table 9.6-3
CHEMICAL ANALYSIS PANEL INSTRUMENTATION[a]

Parameter	Instrument or Method	Range of Measurement
I. Reactor Coolant and Containment Sump		
1. Boron [b]	Auto-Titrator	200-2000 ppm
2. pH	Probe	1-13
3. Dissolved oxygen [b]	Probe	1-20 ppm
4. Dissolved hydrogen [b]	Gas chromatograph	10-2000 cc/kg
5. Chloride	Ion chromatograph	0-20 ppm
II. Containment Atmosphere		
1. Hydrogen	Gas chromatograph	0-10%

a. Use of Chemical Analysis Panel Instrumentation has been discontinued.
b. Reactor coolant only

Table 9.6-4
HIGH RADIATION SAMPLING SYSTEM WASTE TANK

Quantity per station	1
Capacity	17 gal
Material of construction	Stainless steel
Code	ASME VIII
Design pressure	150 psig
Design temperature	150°F

Table 9.6-5
HIGH RADIATION SAMPLING SYSTEM WASTE TANK PUMPS

Quantity per station	2
Capacity	5 gpm
Material of construction	Stainless steel
Shaft seal	Double, mechanical

Table 9.6-6
HIGH RADIATION SAMPLING SYSTEM EVACUATING BELLOWS COMPRESSOR

Quantity per station	1
Capacity	2 scfm
Discharge pressure (max)	40 psig
Material of construction	Stainless steel
Motive device	Reciprocating bellows

Table 9.6-7

HIGH RADIATION SAMPLING SYSTEM SAMPLING PANEL DESIGN CONDITIONS

I. Process		
1. Pressure (max)	Reactor coolant sampling	2485 psig
	Sump sampling	75 psig
	Containment atmosphere	45 psig
2. Temperature (max)	Reactor coolant sampling	700°F
	Sump sampling	220°F
	Containment atmosphere	310°F
II. ln-containment ambient		
1. Pressure	9-60 psia	
2. Temperature	310°F	
3. Relative humidity	0-100%	
III. Outside containment ambient		
1. Pressure	Atmospheric	
2. Temperature	40-120°F	
3. Relative humidity (%)	0-100%	
4. Radiation	1×10^7 rads	

Figure 9.6-1
PRIMARY SAMPLING SYSTEM

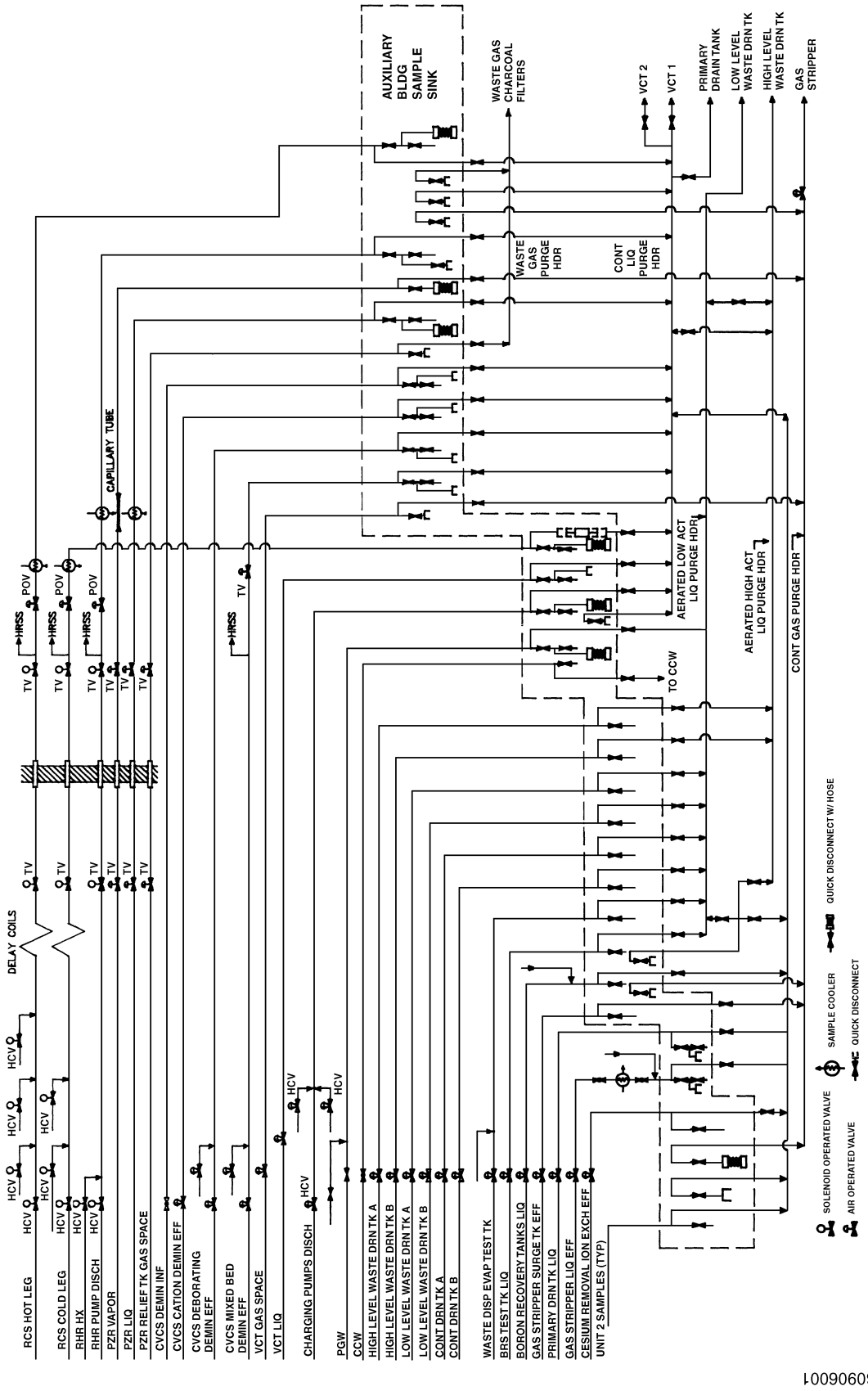

9.7 VENT AND DRAIN SYSTEM

The vent and drain system collects potentially radioactive fluids and gases from various systems and discharges them either to the waste disposal system (Section 11.2) or to the boron recovery system (Section 9.2).

9.7.1 Design Bases

The vent and drain system is shown in Figure 9.7-1 and Reference Drawings 1 and 2. The drains are separated into those carrying waste fluids to the waste drain tanks for processing and disposal, and those carrying reactor coolant fluids to the primary drain transfer tank and primary drain tank for processing and recovery. The vents are separated into vents in which air is the predominant gas (filtered and discharged to the atmosphere), and vents in which hydrogen and radioactive gases are the predominant gases (discharged to the gaseous waste disposal system).

Redundancy has been provided for all active system components to ensure system operation.

The primary drain transfer tanks, primary drain coolers, relief valves, and the piping, valves, and supports of the vent and drain system conform to Seismic Class I criteria.

The design data for the vent and drain system components are given in Table 9.7-1.

9.7.2 Description

Radioactive liquids, other than letdown from the reactor coolant system (Chapter 4), are gathered and transferred to the high-level or low-level waste drain tanks in the liquid waste disposal system (Section 11.2.3) by either the high-level or low-level waste drain headers.

Both containment structures, the Auxiliary Building, the Fuel Building, both safeguards areas, the component cooling water heat exchanger area in the Turbine Building, and both incore instrumentation areas have been provided with sumps for collecting drainage. The drainage is transferred by gravity or sump pumps to either the high-level or low-level waste drain tank. Segregation of the various waste streams is based on operational and health physics discretion.

The containment sump collects all liquid waste in the containment. The auxiliary building sump collects floor drains, equipment drains, ion exchanger drains, and filter drains. The fuel building sump, safeguards area sumps, and component cooling heat exchanger pit sump collect floor drains in the respective areas.

Drain liquids originating from each reactor coolant system are discharged to a primary drain transfer tank through a high-pressure drain header. The high-pressure drain header permits high-pressure or low-pressure gravity draining of individual reactor coolant loops, the pressurizer relief tank, or the complete reactor coolant system, except for the reactor vessel. An alternate use of the high-pressure drain header is to provide a path for draining the loops during hot shutdown.

Low-pressure radioactive drains, pressurizer relief tank drains, and leakoff liquids from valve stems and reactor coolant pumps drain by gravity to the high-pressure drain header through the primary drain cooler to the primary drain transfer tank. From there, they are pumped to the primary drain tank in the boron recovery system (Section 9.2) by the primary drain transfer pumps. The primary drain cooler is provided to cool all liquid entering the primary drain transfer tank. A high-temperature alarm is provided in the primary side of the cooler outlet to warn the operator of excessive hot liquid flowing into the primary drain transfer tank.

The sample header drains flow directly to the primary drain tank. In the event of high level in the volume control tank of the chemical and volume control system (Section 9.1), the demineralized letdown flow is diverted directly to the primary drain tank through the primary drain transfer pump discharge header.

An air vent header is provided in each reactor containment and may be used to vent the reactor coolant system and components during filling operations. A vent pot located at the end of this header separates any entrained liquid for drainage by gravity to the containment sump. Air leaving the vent pot is discharged to the gaseous waste disposal system (Section 11.2.5). Vents from the ion exchangers and demineralizers, the component cooling surge tank, and waste drain tanks are handled in the same manner.

Radioactive gases are vented to the gaseous waste disposal system. Included in this category are vents from the pressurizer relief tanks, volume control tanks, reactor coolant pumps standpipe vent, bypass vents, and the sampling system gas sample purge line. The gases can also be vented to external process systems following an accident. Flanged connections with isolation valves and reach rods are provided for this purpose. In order to reduce exposure, the connections are located in an area that permits access after an accident.

Piping for the vent and drain systems is designed in accordance with the ANSI B31.1 Code for Pressure Piping. Isolation valves are provided in all vent and drain lines from the containment structures (Section 5.2).

The Teflon seats and packing in the trip valves of the primary drain transfer tank vent lines have been replaced with ethylene propylene seats and graphite packing material. In addition, the ball valves in the primary drain transfer pump discharge line have been replaced with diaphragm valves containing ethylene propylene rubber diaphragms. The ethylene propylene is qualified to 1.0×10^7 rads which is above the calculated total integrated doses of 7.4×10^6 rads and 5.0×10^6 rads, respectively, for the valves. The Teflon was only qualified to 1.0×10^4 rads. These changes ensure that the valves will function as designed in the calculated radiation fields.

9.7.3 Design Evaluation

The vent and drain system is sized to handle the maximum amounts of liquids and gases expected during station operation. Sizing the equipment for these maximum values results in design parameters shown in Table 9.7-1.

Austenitic stainless steel piping is used to transfer liquids and radioactive gaseous waste; carbon steel piping is used for nonradioactive gases.

The fuel building sump pumps are a duplex pump arrangement. The pumps, which are full-size, are controlled by float switches that cycle the pumps on and off. An alternator is provided to obtain equal wear on the pumps. Two additional float switches are provided; the first one starts the standby pump if the operating pump fails, and the second one sounds an alarm on high sump level.

The auxiliary building sump pumps are a duplex pump arrangement. The pumps, which are full-sized, are controlled by a level detector that cycles the pumps on and off, and provides an alternator to obtain equal wear on the pumps. The level detector also starts the standby pump if the operating pump fails, and sounds an alarm on high sump level.

The containment sump pumps are a duplex pump arrangement. Each pump is full-size and independently controlled. One pump is in automatic service, the other in standby. When the water level in the sump reaches a specified height, an alarm sounds and the pump starts. The pump stops automatically upon emptying the sump. Containment isolation valves are provided in the discharge piping. The isolation valves are normally open but close upon a safety injection signal loss of power or air to the valves, or operation of the test switch. When initiated, the containment isolation signal closes the valves or overrides the pump start signal to keep the isolation valves closed.

The primary drain transfer pumps are full-size and independently controlled. Two pumps are provided for each unit. One pump is in automatic service, the other on standby. When the water level in the tank reaches a specified height, an alarm sounds and the pump starts. The pump stops automatically upon emptying the primary drain transfer tank. Containment isolation valves are provided in the discharge piping and are interlocked with the pump controllers. The isolation valves open and close on pump start and stop. When initiated, the containment isolation signal closes the valves or overrides the pump start signal to keep the isolation valves closed.

The primary drain coolers and primary drain transfer tanks and interconnecting piping, valves, and supports are designed as Seismic Category I components. They are also protected from the design tornado by being located inside the containment structures.

9.7.4 Tests and Inspections

Formal testing of this system is unnecessary, since it is in normal day-to-day operation. Inspection is performed in accordance with normal plant maintenance procedures.

9.7 REFERENCE DRAWINGS

The list of Station Drawings below is provided for information only. The referenced drawings are not part of the UFSAR. This is not intended to be a complete listing of all Station Drawings referenced from this section of the UFSAR. The contents of Station Drawings are controlled by station procedure.

	Drawing Number	Description
1.	11448-FM-083A	Flow/Valve Operating Numbers Diagram: Vent and Drain System, Unit 1
	11548-FM-083A	Flow/Valve Operating Numbers Diagram: Vents and Drains System, Unit 2
2.	11448-FM-083B	Flow/Valve Operating Numbers Diagram: Vent and Drain System, Unit 1
	11548-FM-083B	Flow/Valve Operating Numbers Diagram: Vents and Drains System, Unit 2

Table 9.7-1
VENT AND DRAIN SYSTEM COMPONENT DESIGN DATA

Primary drain transfer tanks	
Number	2 (one for each unit)
Capacity	Approximately 725 gal
Design pressure	200 psig
Design temperature	400°F
Operating pressure	Atmospheric
Operating temperature	150°F
Base metal material	A442 Gr 60
Cladding	A240 SS 304L
Design code	ASTM III, Class C
Primary vent pots	
Number	2 (one for each unit)
Capacity	20 gal
Design pressure	25 psig
Design temperature	200°F
Operating pressure	Atmospheric
Operating temperature	200°F
Base metal material	SS 304
Design code	ASTM III, Class C
High-level waste drain filter	
Number	1
Retention size	5 µm
Filter element	Fiber
Capacity, normal	50 gpm at 2.5 psi ΔP
Capacity, max	75 gpm at 5 psi ΔP
Material	SS 304
Design pressure	150 psig
Design temperature	250°F
Design code	ASME III, Class C
Low-level waste drain filter	
Number	1
Retention size	5 µm
Filter element	Fiber
Capacity, normal	50 gpm at 2.5 psi ΔP
Capacity, max	75 gpm at 5 psi ΔP
Material	SS 304
Design pressure	150 psig
Design temperature	250°F
Design code	ASME III, Class C

Table 9.7-1 (continued)
VENT AND DRAIN SYSTEM COMPONENT DESIGN DATA

Safeguards area sump pumps	
Number	4 (two for each unit, one required)
Type	Vertical centrifugal single-stage
Motor horsepower	1 hp
Seal	Packing
Capacity	25 gpm
Head at rated capacity	39 ft
Design pressure	150 psig
Design temperature	180°F
Materials	
Pump casing	Cast iron
Shaft	Steel
Impeller	Bronze
Fuel building sump pump	
Number	2 (one required)
Type	Vertical centrifugal single-stage
Motor horsepower rating	3 hp
Seal	Packing
Capacity	25 gpm
Head at rated capacity	74 ft
Design pressure	150 psig
Design temperature	350°F
Materials	
Pump casing	SS 304
Shaft	SS 304
Impeller	SS 304
Auxiliary building sump pump	
Number	2 (one required)
Type	Vertical centrifugal single-stage
Motor horsepower	2 hp
Seal	Packing
Capacity	50 gpm
Head at rated capacity	49 ft
Design pressure	150 psig
Design temperature	350°F
Materials	
Pump casing	SS 304
Shaft	SS 304
Impeller	SS 304

Table 9.7-1 (continued)
VENT AND DRAIN SYSTEM COMPONENT DESIGN DATA

Reactor Containment Sump Pumps	
Number	4 (two for each unit, one required)
Type	Vertical centrifugal submersible single stages
Motor horsepower	6 hp
Seal	Mechanical
Capacity	50 gpm
Head at rated capacity	130 ft
Design pressure	145 psig
Design temperature	195°F
Materials	
Pump casing	Aluminum
Shaft	SS 431
Impeller	Chromium-Alloyed cast iron
Incore Instrumentation Room Sump Pumps	
Number	2 (one for each unit)
Type	Vertical centrifugal single-stage
Motor horsepower	1.5 hp
Seal	Packing
Capacity	10 gpm
Head at rated capacity	40 ft
Design pressure	150 psig
Design temperature	350°F
Materials	
Pump casing	SS 304
Shaft	SS 304
Impeller	SS 304
Component cooling heat exchanger pit sump pump	
Number	1
Type	Vertical centrifugal single-stage
Motor horsepower	1 hp
Seal	Packing
Capacity	25 gpm
Head at rated capacity	44 ft
Design pressure	160 psig
Design temperature	180°F
Materials	
Pump casing	Cast iron
Shaft	Stainless Steel
Impeller	Bronze

Table 9.7-1 (continued)
VENT AND DRAIN SYSTEM COMPONENT DESIGN DATA

Primary drains transfer pumps		
Number	4 (two for each unit, one required)	
Type	Canned horizontal centrifugal	
Motor horsepower	3 hp	
Seal	Canned pump	
Capacity	60 gpm	
Head at rated capacity	64 ft	
Design pressure	150 psig	
Design temperature	400°F	
Materials		
Pump casing	SS 316	
Shaft	SS 316	
Impeller	SS 316	
Loop drain header relief valve		
Number	2 (one for each unit)	
Capacity	1 gpm at 150 psig, 366°F	
Pressure setting	150 psig	
Design pressure	150 psig	
Design temperature	366°F	
Primary drain transfer tank relief valve		
Number	2 (one for each unit)	
Capacity	15 gpm at 150 psig, 366°F	
Pressure setting	150 psig	
Design pressure	150 psig	
Design temperature	366°F	
Primary drain cooler		
Number	2 (one for each unit)	
Total duty	5×10^6 Btu/hr	
	Shell	Tube
Design pressure	150 psig	200 psig
Design temperature	200°F	400°F
Operating pressure	100 psig	50 psig
Operating temperature, in/out	105/140°F	350/150°F
Material	Carbon steel	SS 304
Fluid	Component cooling water	Reactor coolant system drains
Design code	ASME III, Class C	ASME III, Class C

Table 9.7-1 (continued)
VENT AND DRAIN SYSTEM COMPONENT DESIGN DATA

Vent and drain piping and valves	
Material	Stainless steel and carbon steel
Design code	ANSI B31.1
Design pressure	95 psig
Design temperature	250°F

Figure 9.7-1 (SHEET 1 OF 2)
PRIMARY VENT AND DRAIN SYSTEM

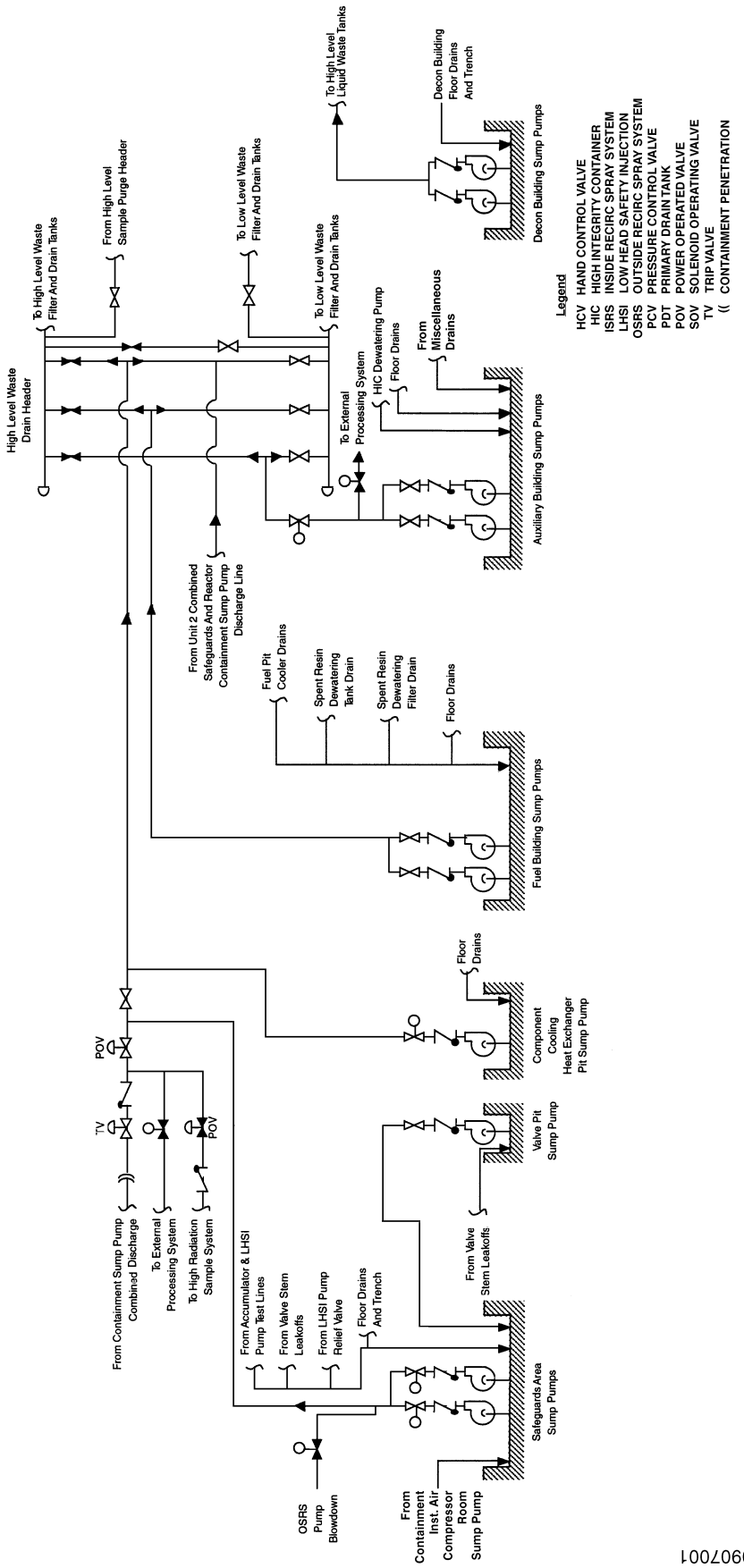

Figure 9.7-1 (SHEET 2 OF 2)
PRIMARY VENT AND DRAIN SYSTEM

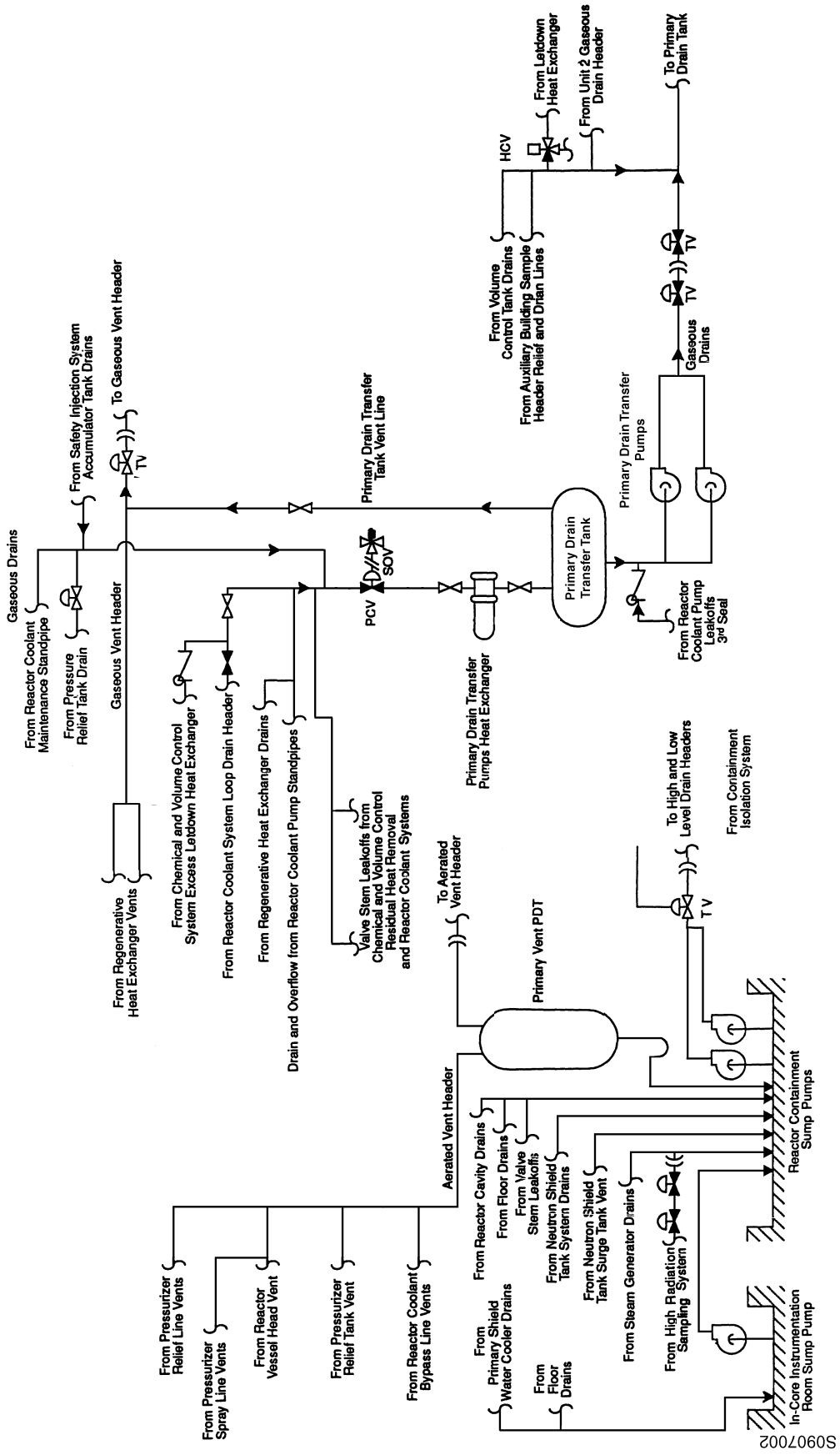

Intentionally Blank

9.8 COMPRESSED AIR SYSTEM

The compressed air system includes a service air subsystem, an instrument air subsystem, and a containment instrument air subsystem for each unit. Air service to certain common station areas may be provided from either unit.

9.8.1 Design Bases

The compressed air system is shown in Figure 9.8-1 and Reference Drawings 1 and 2. The design objective of the compressed air system is to ensure availability of sufficient quantities of compressed air of suitable quality and at the pressures required for station operation.

Design pressures are dictated by the expected uses of instrument or service air. Design temperatures are those resulting from extreme ambient conditions and are based on 105°F for the bearing cooling water cooled instrument air compressors and 105°F for the air cooled service air compressors. The dew point of the instrument air is reduced by air driers. In the turbine building and low level subsystems, the air driers incorporate desiccants that reduce the pressure dew point to approximately -40°F or lower. The containment building and condensate polishing building subsystems incorporate refrigerant driers that reduce the pressure dew point to approximately +50°F and +35°F, respectively. The lowest indoor temperature expected at the point of instrument air use is about +50°F everywhere other than containment. Inside of containment, the lowest expected temperature is higher.

Design data for components of the compressed air system are given in Table 9.8-1.

The compressed air system, compressors, air receivers, driers, piping, valves, and supports to critical instrument and controls are designed to provide reliable sources of compressed air. Portions of the subsystems (critical system components and designated containment isolation features) are designed to Seismic I Criteria (Table 15.2-1). Instrument air compressors function as backup sources of compressed air to the instrument air system and the containment instrument air subsystem and are connected to the emergency power system for greater availability of compressed air in the event off-site power is lost.

While the piping, compressors, and related equipment associated with the compressed air system are not required to operate during or following a design bases accident, air operated devices, both safety related and non-safety related, are designed to fail to a safe position on a loss of air to the device. The safety related air operated devices required to function after an accident are provided with backup air or nitrogen bottles to operate the devices for the complete loss of normal instrument air supply. The plant systems that have critical components which require safety related-dedicated air tanks are as follows: component cooling (Section 9.4.4.3), main steam/feedwater (Section 10.3.5.2), reactor coolant (Section 4.3.4.2), and ventilation vent systems (Section 5.3.1.3.4).

9.8.2 Description

The service air subsystem is equipped with two (one per unit) 100% capacity electric motor driven air compressors, operating at approximately 110 psig. The service air compressors are the primary source of compressed air to both the service air and instrument air subsystems during normal station operation. These compressors are located outside on the south side of the turbine building. The service air subsystem also provides service air at hose connections in each unit for operating equipment and tools during normal operation and refueling.

The instrument air subsystem is used to provide air as required for instruments and controls associated with each unit outside containment, and are also available as a backup source of air for the containment instrument air subsystem. The instrument air subsystem is equipped with two (one per unit) 100% capacity electric motor driven air compressors, which operate at approximately 110 psig. The instrument air compressors are used to provide compressed air to the instrument air subsystem during loss of power events and to provide backup instrument air during normal station operation. These compressors are located in the turbine building in an area protected from tornadoes, missiles, and earthquakes.

The two unit specific service air compressors are connected to a common discharge header. This header simultaneously supplies compressed air to each of the two unit specific and the shared service air receivers. The shared diesel powered service air compressor is so connected as to supply compressed air to all three service air receivers.

The two unit specific service air compressors are connected to a control system that provides for one of the two compressors to function in a “lead” capacity. In such a configuration, should the air header pressure fall below a predetermined value, the second or “lag” compressor will automatically start and restore header pressure. The lead and lag functions are periodically exchanged by means of a selector switch. The shared diesel powered service air compressor is manually started when needed.

Each instrument air receiver is directly connected to its unit specific service air receiver. In this manner the service air subsystem becomes the primary air source for the instrument air subsystem. Each instrument air receiver is isolated from its associated service air receiver by means of a check valve.

Each unit specific instrument air compressor is connected to its associated instrument air receiver by means of a water cooled aftercooler and a check valve. Each instrument air compressor is capable of automatically starting should the instrument air header pressure fall below a predetermined value. In this manner, the instrument air compressors provide a backup source of compressed air to the instrument air subsystem.

The unit specific compressors in both the service air subsystem and instrument air subsystem are classified as non-lubricated or oil free. The shared diesel powered service air compressor is of oil flooded screw design. This compressor has charcoal filters installed between

the compressor and the service air subsystem piping. These filters prevent oil contamination of the compressed air piping systems.

The compressed air in the instrument air subsystem is filtered and dried. The compressed air in both the service air and instrument air subsystems is suitable for human consumption (breathing air).

The instrument air compressors are cooled by bearing cooling water (Section 10.3.9), which is available during normal unit operation. The fire protection system can be used as a manual backup cooling method. The instrument air compressors and their driers are connected to the emergency power system (Section 8.5) so that continuous instrument air supply is ensured after a loss-of-power accident. The two electric motor driven and one shared diesel engine driven service air compressors are air cooled.

Station instrument air and service air lines penetrating the containment structures are provided with normally closed manual shutoff valves located outside the containment to seal the containment internal atmosphere from the outside atmosphere during an accident. Instrument and service air line penetrations are isolated in accordance with Class V piping, as described in Section 5.2.

The containment instrument air normal supply line from the compressors and air dryers located outside containment, has a containment isolation trip valve outside containment and a check valve located inside containment. The suction line from the containment to the compressors has both an inside and outside containment isolation trip valve. The containment trip valve piping configuration is Class I, as described in Section 5.2 for containment isolation.

The equipment includes the conventional accessories, such as cylinder cooling systems, storage receivers, aftercoolers, and safety valves.

The containment instrument air subsystem consists of two water-sealed, rotary compressors and associated refrigerant air driers installed at the 11 ft. 6 in. elevation of the safeguards area buildings for Units 1 and 2. The compressors take a suction from the containment via a 3-inch penetration. Containment trip valves are provided on both sides of the penetration. Each compressor can provide a minimum of 19.6 scfm at 90 psig minimum. A shell and tube heat exchanger is provided on each compressor to cool the seal water. Cooling water for these heat exchangers comes from the component cooling water system. A connection to primary grade water is also provided for sealwater makeup. One compressor will be in continuous service and will automatically load or unload to meet system demand. The other compressor will be on standby and will start automatically if system pressure decreases to 90 psig.

Each compressor discharges to its own moisture separator and filter. Water removed from the air by the moisture separators and air driers is directed to a sump, where a small sump pump transfers the water to the liquid waste system. Each air compressor discharges to its own refrigerant air drier. The piping allows the air compressors to be cross-connected with the air

driers as well as allowing them to bypass the driers completely. Air exiting the driers will have a dewpoint of about +50°F. The air will enter the containment through a containment trip valve tied into the turbine building control air cross-connect piping, using containment penetration 47.

Since the compressors process potentially contaminated air, an enclosure is provided around the air compressors, driers, and associated equipment. During normal operation, the enclosure air is ducted to and monitored for radioactivity prior to entering the ventilation vent number 2. During abnormal conditions, the enclosure exhaust ventilation dampers are closed on a safety injection signal, and the safeguards exhaust fans are subsequently tripped. In addition, during a DBA the containment instrument air subsystem is isolated by the containment isolation trip valves. The enclosure consists of sheet metal walls and roof. The floor of the enclosure is a poured concrete pad with integral sump and slopes toward the sump.

The compressors are powered from normal buses, since they are not required to operate during or following an accident.

Associated piping is designed in accordance with ANSI B31.1-1967. Design conditions are 150 psig and 150°F.

9.8.3 Design Evaluation

The following devices are provided to preserve an adequate instrument air supply under abnormal conditions, and to ensure system reliability:

1. High capacity service air compressors supply both service air and instrument air subsystems. If instrument air pressure falls, additional compressors may be automatically or manually started. Service air loads can be isolated from the main control room via solenoid operated valves. A bypass line is also provided from the outlet of each unit specific service air receiver to the inlet of its associated instrument air drier. In the event of failure of an instrument air receiver, compressed air may be directly supplied by the service air receiver. In addition, the instrument air compressors are supplied by the emergency bus for loss of off-site power events.

2. Alternate standby air sources are available. If the service air header pressure falls, the second or “lag” service air compressor will automatically start and restore header pressure. If the instrument air header pressure falls, the instrument air compressors automatically start and restore the instrument air subsystem pressure. Also, the shared, diesel-powered service air compressor can be manually started when needed.

3. Instrument air backup between the two units. This is provided by means of cross-connecting lines between the two units at the main headers.

4. Instrument air backup to containment instrument air subsystem. In the event of the loss of both containment instrument air compressors and receivers, containment instrument air can be supplied from the instrument air system by opening the manually operated valves in the cross-connect line provided.

5. Compressed air backup system to each instrument air line leading to a Spent Fuel Pool (SFP) canal door seal (2 doors). In the event of loss of instrument air pressure to a SFP canal door seal, the compressed air system provides backup pressure to ensure that the seal remains inflated to prevent leakage from the SFP into the fuel transfer canal.

The containment instrument air system is non-safety-related because the components requiring containment instrument air are not necessary for safe shutdown. The majority of loads on this system are spring-diaphragm-type air-operated valves, which use spring force to maintain the valves in a fail-safe condition. The remaining loads are the personnel airlock inner-door locking device and the reactor head inflatable seal in the head storage area. The compressors, accessories, and piping upstream from the first containment isolation valve and associated pipe support outside containment are not seismically qualified.

9.8.4 Tests and Inspections

Testing of the compressed air subsystems consists of air quality tests and compressor tests. Air quality is monitored through surveillance procedures that ensure air hydrocarbon content, particulate content, and dew point meet acceptable standards. Generally, compressor tests are conducted at refueling, with the exception of a more frequent test of the instrument air compressor. Preventive maintenance and inspection of the systems is performed in accordance with normal station maintenance procedures.

9.8 REFERENCE DRAWINGS

The list of Station Drawings below is provided for information only. The referenced drawings are not part of the UFSAR. This is not intended to be a complete listing of all Station Drawings referenced from this section of the UFSAR. The contents of Station Drawings are controlled by station procedure.

	Drawing Number	Description
1.	11448-FM-075A	Flow/Valve Operating Numbers Diagram: Compressed Air System, Unit 1
2.	11548-FM-25A	Flow Diagram: Compressed Air System, Unit 2

Table 9.8-1
COMPRESSED AIR SYSTEM DESIGN DATA

Service Air Subsystem	
Service Air Compressors	
Number	3 (two unit specific, one shared)
Discharge Pressure	110 psig
Discharge Temperature	120°F (unit specific)
Discharge Temperature	150°F (shared)
Capacity	750 scfm (each for all three)
Powered By	Electric Motor (unit specific)
Powered By	Diesel Engine (shared)
Service Air Receivers	
Number	3 (two unit specific, one shared)
Design Press/Temp	125 psig @ 400°F (unit specific)
Design Press/Temp	125 psig @ 500°F (shared)
Volume	77.1 ft^3 (unit specific)
Volume	678.6 ft^3 (shared)
Operating Pressure	110 psig
Operating Temperature	120°F
Material	Stainless Steel (Unit 1)
Material	Carbon steel (Unit 2 and shared)
Design code	ASME VIII
Instrument Air Compressors	
Number	2 (one for each unit)
Discharge pressure	110 psig
Discharge temperature	120°F
Capacity	373 scfm
Instrument Air receivers	
Number	2 (one for each unit)
Volume	77.1 ft^3
Design pressure	125 psig
Design temperature	400°F
Operating pressure	110 psig
Operating temperature	120°F
Material	Carbon steel
Design code	ASME VIII
Instrument Air Dehydrators	
Number	2 (one for each unit)
Capacity	650 scfm
Dewpoint at 100 psig	-40°F

Table 9.8-1 (continued)
COMPRESSED AIR SYSTEM DESIGN DATA

Service Air Subsystem (continued)	
Instrument Air Dehydrators (continued)	
Type	Desiccant
Instrument Air Aftercoolers	
Number	1 per compressor
Type	Shell tube
Tube-side flow (air)	273 cfm
Shell-side flow (water)	6 gpm
Shell-side design pressure	75 psig
Tube-side design pressure	135
Code	ASME VIII not stamped
Shell material	Steel
Tube material	Admiralty
Tube sheet material	Chrome-plated steel
Service Air Aftercoolers	
Number	1 per compressor
Type	Finned tube
Tube-side flow (air)	750 cfm
Tube-side design pressure	250 psig
Tube material	Aluminum
Containment Instrument Air Subsystems	
Containment Instrument Air Compressors	
Number	4 (two for each unit)
Discharge pressure	95.3 psig (Nominal)
Capacity	30 scfm (Nominal)
Compressor motor	40 hp
Containment Instrument Air Receivers	
Number	4 (two for each unit)
Volume	34 ft^3
Design pressure	200 psig
Design temperature	450°F
Operating pressure	100 psig
Operating temperature	130°F
Material	Carbon steel
Design code	ASME VIII
Containment Instrument Air Driers	
Number	4 (two for each unit)
Capacity	45 scfm

Table 9.8-1 (continued)
COMPRESSED AIR SYSTEM DESIGN DATA

Containment Instrument Air Subsystems (continued)	
Containment Instrument Air Driers (continued)	
Dewpoint at 100 psig	50°F [a]
Particulate count	< 20 µm
Type	Refrigerant
Compressed Air System Piping and Valves	
Materials	Carbon steel, stainless steel, copper and bronze
Design code	USAS B31.1

a. Since the containment operates under a vacuum, an exception is permitted to the ISA dewpoint standard by NRC's review correspondence of March 25, 1993 by which a dewpoint temperature of 50°F is acceptable.

Figure 9.8-1
COMPRESSED AIR SYSTEM

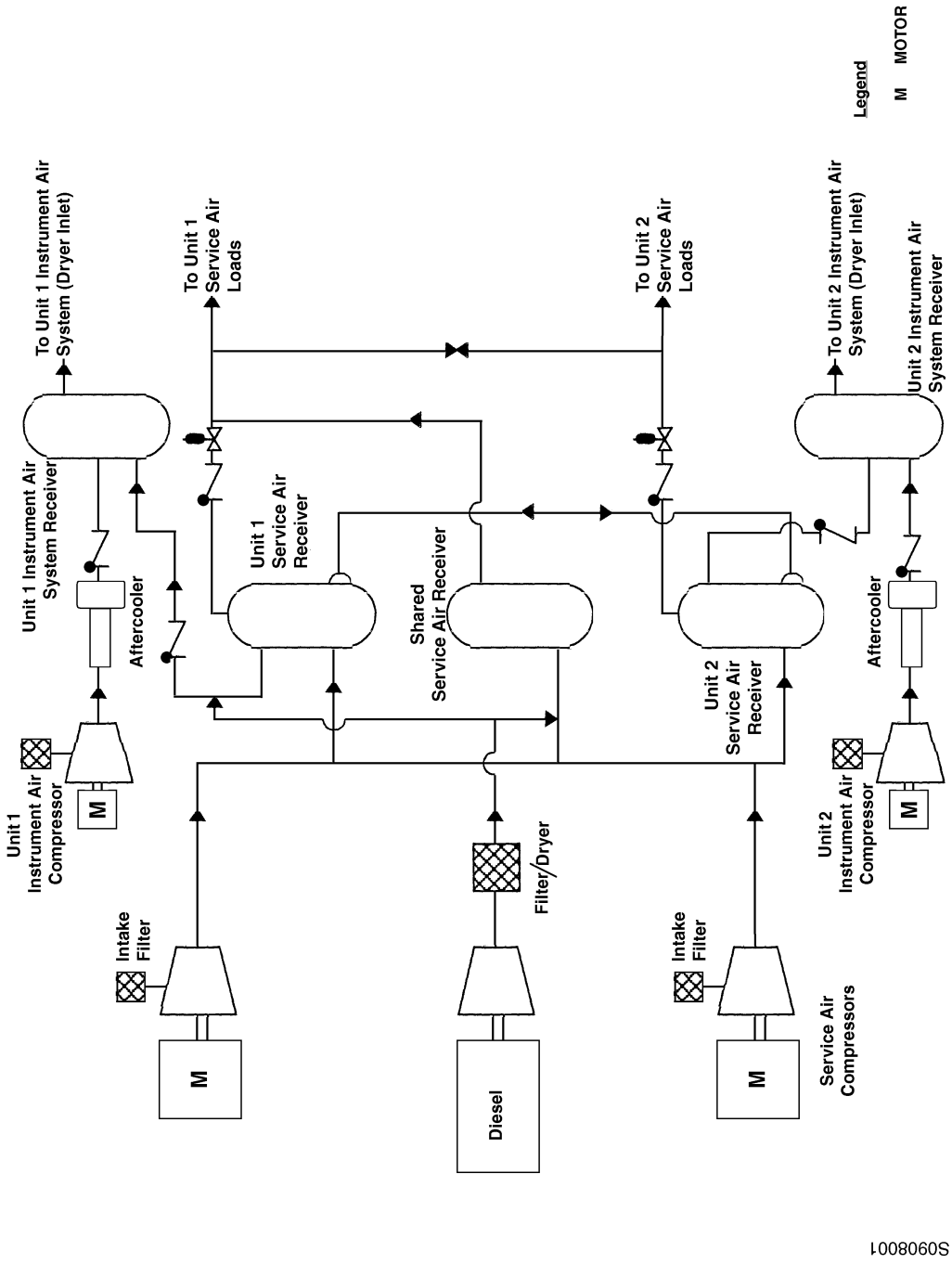

S0908001

Intentionally Blank

9.9 SERVICE WATER SYSTEM

River water is the source of service water for the Surry Power Station. Since this water is brackish, it is not directly used for cooling critical equipment. Service water is used as cooling water for heat exchangers that remove heat from the component cooling water system (Section 9.4), the bearing cooling water system (Section 10.3.9), the recirculation spray system (Section 6.3.1), charging pump service water subsystem (Section 9.9.2.1), and other station applications such as air conditioning and chilled water. A review of the effects of the power uprate to a core power of 2546 MWt was conducted and the service water system was found to be adequate.

The service water system is shown in Figure 9.9-1 and Reference Drawings 1 through 4.

9.9.1 Design Bases

The service water system is designed for the removal of heat resulting from the simultaneous operation of various systems and components of two units based on a maximum river water temperature of 95°F. This temperature is 2°F warmer than river model tests indicate for the river water temperature on record (Reference 1). The service water system is designed as a Class I system (Section 15.2.4).

The charging pump cooling water system consists of two separate subsystems: a component cooling water subsystem and a service water subsystem. The charging pump component cooling water system is described in Section 9.4.3.5.

A separate charging pump service water system is provided for each reactor unit. The charging pump service water system is designed to provide cooling water from the service water system to the charging pump intermediate seal coolers and to the charging pump lubricating oil coolers. Charging pump service water system component design data is given in Table 9.9-3. A more detailed system description is given in Section 9.9.2.1. The charging pump service water system is designed as Class I (Section 15.2.1).

9.9.1.1 Accident Design Bases

During a LOCA without a loss of station power, the supply and discharge isolation valves to the recirculation spray heat exchangers open in the affected unit. All valves in the service water supply to the other heat exchangers will remain open. During this type of accident, the service water requirements will increase above those listed under Section 9.9.2 and include the flow to the recirculation heat exchangers, which is given in Table 9.9-2.

If a total loss of station power occurs simultaneously with a LOCA in either unit, the recirculation spray heat exchanger supply and discharge isolation valves open and all other isolation valves in the service water system of the LOCA affected unit are closed. Under these conditions the service water flow to the recirculation spray heat exchangers will be at least 12,280 gpm and vary as a function of the intake canal level.

In the event of a total loss of station power only, the recirculation spray heat exchanger supply and discharge isolation valves remain closed and all other service water isolation valves remain open.

The operation of condenser and service water valves under accident conditions and various other events is described in Table 9.9-1.

9.9.1.2 Emergency Service Water Pumps

In the event of a loss of station power at the river intake, three diesel-driven, vertical emergency service water pumps have been provided for both units at the river intake structure to supply makeup to the high-level canal. The pumps are sized to provide the design required make-up to the intake canal with the James River at design low water level (i.e., maximum expected developed head).

The following criteria were used in sizing the emergency service water pumps:

1. In the event of a LOCA and a total loss of station power, with the requirement that the unit that did not undergo the LOCA must also be cooled down, water flow is required to the recirculation spray heat exchangers, component cooling heat exchangers, other miscellaneous loads, and make-up for various non-cooling related high level canal inventory losses. This would require two of the three pumps to be operated.
2. In the event of a design-basis accident (LOCA in either unit and a total loss of station power), water flow is required to the recirculation spray heat exchangers, component cooling heat exchangers, other miscellaneous loads, and make-up for various non-cooling related high level canal inventory losses. This condition, assuming one unit is in cold shutdown and the heat load from the shut down unit and spent fuel is less than 25 million BTU/Hr, would require one emergency service water pump in operation.
3. In the event of a loss of station power in two units, component cooling heat exchangers would be required to cool down the units. Additional flow would be required for other miscellaneous loads and make-up for various non-cooling related high level canal inventory losses. This would require two of the three pumps to be operated.

9.9.1.3 System Operation During Design Basis Hurricane

A Probable Maximum Hurricane (PMH), as described in Section 2.3.1.2.2, will result in reduced available service water flow due to the decreased driving head across the gravity flow service water system. The driving head will be reduced since the river level, to which the service water flow path discharges, will be higher due to storm surge. The revised design basis PMH analysis documents the adequacy of the Service Water System to maintain the units in a safe intermediate shutdown condition by removing decay heat concurrent with the loss of off site power. The design basis PMH analysis requires that operating units be brought to intermediate shutdown prior to the hurricane reaching the site and subsequently maintaining RCS temperature below 350°F. Units at cold shutdown or in refueling would be maintained at either cold or

intermediate shutdown with RCS temperature below 350°F. Refueling activities would be suspended prior to the arrival of the hurricane. In accordance with design basis criteria, a design basis accident (LOCA) is not considered during the PMH (Reference 2).

Prior to arrival of the hurricane, site procedures require the start of hurricane preparations such as closing missile doors, putting flood protection barriers in place, and preparing equipment required for shutdown. Emergency service water (ESW) pump house door seal plates and louver opening covers will be procedurally installed.

With both units operating prior to the hurricane, the units are to be shut down two hours before the hurricane reaches the site. Decay heat will be removed using the circulating water/service water system until a loss of power occurs after which the auxiliary feedwater system will be used. For analysis basis, this is assumed to be 2 hours after the plant has shut down (i.e., the loss of power occurs coincident with the arrival of hurricane winds on site). This criteria is consistent with the guidelines provided in NUMARC 87-00 (Section 2.11, *Hurricane Preparations*) (Reference 3).

The water elevation in the Intake Canal will be established at 28-30 feet to ensure that sufficient driving head is available to provide heat removal capability for the Component Cooling System during the expected storm surge. Reanalysis of the wave run-up within the intake canal indicates a freeboard of 4 feet from the top of the canal (Elevation 36 ft.) is required. Therefore, a canal elevation of approximately 28-30 feet is within the requirements of the wave run-up analysis.

Due to the potential for the intake canal siphoning back through the circulating water pump discharge lines, the circulating water pumps will be shut down prior to the hurricane reaching the site. The plant has been modified to break the siphon at Elevation 23 ft., however, the hurricane analysis required an elevation of 28 feet to ensure adequate service water flows with peak river surge. Therefore, the circulating water pumps will be shut down and the siphon broken after raising the canal level to at least 28 feet.

To ensure adequate decay heat removal of the shutdown unit(s) at the peak river surge (Elevation 22.7 ft.), the CCW heat exchangers and pumps will be cross-connected to allow the flow of the CCW pumps to be equally distributed to three CCW heat exchangers. Also, to minimize the CCW heat loads, all nonessential heat loads will be isolated. The analysis is based on using CCW for decay heat removal (using the RHR heat exchangers) for the cold shutdown unit(s), and CCW for heat removal for letdown and auxiliary feedwater for decay heat removal for the intermediate shutdown unit(s).

For the case where one unit was initially operating and one unit was at cold shutdown, an additional 60,000 gallons of AFW is available for the operating unit. This additional 60,000 gallons will allow AFW operation for 39 hours after shutdown of the circulating water system. The decay heat load analysis is based on the operating unit(s) being shut down 2 hours prior to the hurricane reaching the site and loss of power occurs. However, in order to ensure that

a canal level of 28 feet is established and isolation of the circulating water system occurs without siphoning the canal, the operating unit will be shut down by procedures before hurricane wind speed is reached to enable operators to verify that the active vacuum breakers on the circulating water discharge piping have opened. This operator action will be carried out at the low level intake to ensure isolation of the canal and no siphoning prior to high winds and high river elevation.

For less severe hurricane conditions characterized by storm tides at the Surry site less than or equal to 8.0 feet, adequate head for the service water system will remain available for cooling the component cooling system without performing some special actions. A storm tide of 8.0 feet is equivalent to the effective CW/SW discharge elevation with an unprimed CW discharge tunnel. Therefore, securing the CW pumps, and breaking the siphon prior to arrival of the hurricane are not necessary to ensure adequate intake canal inventory remains available. Similarly, advance re-alignment of the CCW system and isolation of non-essential loads also are not required to be performed.

9.9.2 Description

Service water is supplied from the circulating water system (Section 10.3.4) by gravity flow between the high-level intake canal and discharge canal seal pit. During normal operation, the water level in the intake canal is approximately 28 feet above the level in the seal pit at the discharge canal. This differential head supplies the service water to parallel flow paths through the bearing cooling water heat exchangers, component cooling heat exchangers, and recirculation spray heat exchangers, which are also in parallel with the main condenser. Service water is also supplied to the control room and relay room air conditioning system chiller condensers, charging pump lubricating oil coolers, and to the charging pump cooling water system intermediate seal coolers.

Remotely operated butterfly valves are installed at the four inlets and outlets of each main condenser and in the supply lines to the bearing cooling water heat exchangers and the component cooling heat exchangers. For the recirculation spray heat exchangers remotely operated butterfly valves are installed in the supply and discharge lines to each cooler in addition to the supply valves associated with each service water supply header. The operation of these valves is listed in Table 9.9-1. These motor-operated valves are positioned automatically for various accident conditions to conserve water in the intake canal for critical services. Power for these valves is from the station emergency 480V motor control centers.

To minimize the potential for macrofouling and to facilitate venting of the recirculation spray heat exchangers during the initial inrush of water, a portion of the service water supply lines to the heat exchangers is maintained in wet layup and chemically treated during normal operation. The section of pipe to be maintained in layup begins downstream of valves SW-MOV-103/203, A, B, C, and D and extends to the four 24-inch supply line tie-ins off the 36-inch service water supply header. The water maintained in these lines is chemically treated to prohibit marine

growth. In addition, the service water supply to the component cooling heat exchangers is also chemically treated to reduce biofouling of the heat exchangers.

Service water is supplied to the cooling water subsystem of the control room and relay room air conditioning system chiller condensers and to the charging pump service water subsystem from three separate circulating water lines through three independent flow paths. The three flow paths provide the operating flexibility to remove a flow path from service for cleaning without entering into a Technical Specification limiting condition for operation.

A temporary service water flow path may be provided to perform maintenance on the single service water supply to the component cooling heat exchangers. Use of the temporary flow path must be in accordance with an approved temporary change to Technical Specifications and an associated license condition. The piping is routed through the turbine building basement from the circulating water inlet piping to the supply piping of two of the component cooling heat exchangers. The temporary service water supply is used only during a Unit 1 outage.

Trash racks have been installed to prevent large pieces of trash from entering the intake structure which could adversely affect the operation of the emergency service water pumps. Since each bay of the intake structure is sized for a total flow of 210,000 gpm and each emergency service water pump is assumed to deliver a minimum of approximately 14,000 gpm, sufficient water will be provided to the emergency service water pumps as long as approximately 7.5% of the flow area of the racks remains clear.

In the event of a power failure simultaneous with the accumulation of trash at the trash racks, accumulated trash can be removed from the screens of the station intake by manual raking. This procedure could be done indefinitely if necessary although it is expected that the duration of the loss of power would be relatively short, i.e., less than 1 week.

The maximum service water requirements of the system during normal operation are given in Table 9.9-2.

9.9.2.1 **Charging Pump Service Water System Description**

A charging pump service water system for each reactor unit provides water to cool the charging pump intermediate seal coolers and the charging pump lubricating oil coolers.

Either of two 100%-capacity charging pump service water pumps delivers water from the service water system to the charging pump intermediate seal coolers and the charging pump lubricating oil coolers, thereby maintaining the charging pump lubricating oil and the component cooling water used to cool the charging pump mechanical seals at the proper temperature. To ensure that service water is continually available, one pump is in operation and the other on standby. The standby pump is automatically actuated on low pump discharge pressure to supply service water in the event of failure of the operating pump.

The two redundant 100%-capacity charging pump service water pumps are separated by seismic, missile-protected, 3-hour fire rated walls, ceiling, and floor. An automatic actuating fire safe isolation ball valve is installed in the cross-connect piping between the two pump trains. The separation and cross-connect of the two redundant pump trains is designed to meet the requirements stipulated in Appendix R, Section III.L.2(e), of 10 CFR 50.

The installation of two full-capacity charging pump service water pumps provides 100% redundancy for this cooling water system. All components of the charging pump service water system, including pumps and heat exchangers are designed to Seismic Class I criteria.

The charging pump service water pumps are connected to the emergency electrical bus to ensure that they will operate in the event of a loss of station power.

Regulatory Guide 1.97 requirements for post-accident monitoring of charging pump service water system status are satisfied by flow and temperature measurement at the discharge of each charging pump service water pump. Flow and temperature transmitters are environmentally and seismically qualified in accordance with IEEE 323-1974 and IEEE 344-1975 respectively. Control room display is provided through the NUREG 0696 multiplexing system.

9.9.3 Design Evaluation

The following components of the auxiliary cooling systems are required for performance of the engineered safety features:

MOV-SW-103A, B, C, & D	Motor-operated valves that admit SW to the RS coolers SW supply header.
MOV-SW-104A, B, C, & D	Motor-operated valves that admit service water to the recirculation spray coolers.
MOV-SW-105A, B, C, & D	Motor-operated valves that discharge service water from the recirculation spray coolers.
MOV-CW-106A, B, C, & D	Motor-operated valves that stop water flow to the main condenser.
MOV-CW-100A, B, C, & D	Motor-operated valves that stop water flow from the main condenser discharge
MOV-SW-102A & B	Motor-operated valves that stop service water to component cooling water heat exchangers.
MOV-SW-101A & B	Motor-operated valves that stop service water to the bearing cooling water heat exchangers.
SW-P-10A & B	Charging pump service water pumps to supply cooling water to the charging pump cooling water system.

CC-P-2A & B	Charging pump cooling water pumps that circulate the component cooling water of the charging pump cooling water system.
1-CW-LS-102 &103	Canal level switches which provide a signal to isolate non-essential flows from the intake canal.
2-CW-LS-202 & 203	Canal level switches which provide a signal to isolate non-essential flows from the intake canal.

The associated instrumentation and power systems for the operation of these components are redundant, and have protected power and control circuits in conformance to IEEE-279 and 10 CFR 50, General Design Criteria.

The components themselves are redundant except for motor-operated valves MOV-SW-102A & B and MOV-SW-101A & B, which stop service water to the component cooling water heat exchangers and the bearing cooling water heat exchangers. Motor-operated valves MOV-SW-102A & B are in parallel pipelines, as are motor operated valves MOV-SW-101A & B. Failure of one of these valves will allow service water to escape from the service water canal through the component cooling water heat exchangers or the bearing cooling water heat exchangers. However, in the event of failure of one of these motor-operated valves, manual valves that are accessible immediately following a design-basis accident are provided to isolate the service water pipelines to the bearing cooling water heat exchangers and the component cooling heat exchangers, thereby conserving water in the intake canal for the recirculation spray coolers.

In the event of the design-basis accident, the valves in the supply lines to the component cooling heat exchangers may be reopened remote-manually from the control room, provided low canal level setpoint has not been reached, if service water to this system is considered necessary.

Automatic temperature control of the charging pump lube-oil systems is provided by the use of air-operated control valves. These valves are installed in the service water outlet of each lube-oil cooler. Capillary type thermal elements are installed in the oil lines which provide the signal to a pneumatic-indicating temperature controller with the output signal operating the control valve.

The piping and equipment movements at the recirculation spray heat exchangers have been analyzed in accordance with earthquake design criteria and have been installed to ensure that no undue forces are exerted on piping or equipment nozzles.

The gravity flow of service water from the intake canal ensures adequate cooling water to the recirculation spray heat exchangers and other essential loads in the case of the design-basis accident. This supply of cooling water is based on service water flow through recirculation spray heat exchangers, component cooling heat exchangers, and miscellaneous loads that include control room chiller condensers and charging pump coolers. Depending on the initial conditions

and the single failure assumed, one or more emergency service water pumps are required to assist in maintaining the intake canal inventory within design limits.

A diesel fuel-oil storage tank provides sufficient fuel to operate three emergency service water (ESW) pumps for 24 hours and two for an additional 72 hours. Diesel operation for all three ESW pumps is locally controlled. Canal inventory calculations consider pump operation by diesel drive following a loss of offsite power.

The possibility of leakage from the reactor containment into the service water through the recirculation spray heat exchangers after a LOCA is discussed in Section 6.3.1.

9.9.3.1 System Reliability

A double set of normally closed parallel motor-operated butterfly valves control the service water supply to the recirculation spray service water headers. The heat exchanger inlet and outlet valves are closed during normal plant operation to prevent service water inleakage, which could cause tube fouling. These service water valves are opened in response to a Consequence Limiting Safeguards (CLS) hi-hi containment pressure signal. Each individual valve has a CLS activated relay in its opening circuit to open the valves in the event of a design basis accident. The double set of parallel butterfly valves assure that service water will always be provided to the recirculation spray service water header in the event of a malfunctioning valve. Malfunction of a single heat exchanger inlet or outlet valve will result in isolation of service water to only one heat exchanger as discussed in Section 9.9.3.2.

Three diesel-driven emergency service water pumps are furnished to provide makeup to the intake canal during a loss of offsite power. Batteries provide the power required to start and shutdown the diesels and to monitor diesel status. Battery chargers, fed from normal station power, are used to maintain the batteries in a fully charged condition. The three diesels are also each equipped with an alternator capable of carrying running loads and maintaining a float charge on the starting batteries during extended operation of the diesels. Safety-related blocking diodes are provided to isolate the safety related batteries from the non-safety related battery chargers.

9.9.3.2 Malfunction Analysis

Failure of the service water system is precluded as follows:

1. Malfunction of the butterfly valves in supply lines to recirculation spray service water headers is accommodated by a double set of valves in parallel to ensure that water will be available at all times.

2. Malfunction of either a recirculation spray heat exchanger inlet or outlet isolation valve upon receipt of a CLS hi-hi signal will result in isolation of service water to a single recirculation spray heat exchanger. Loss of one heat exchanger will not prevent mitigation of the design basis accident since only two recirculation spray heat exchangers are required (minimum safeguards).

3. Failure to restore power to circulating water pumps is accommodated by three diesel-engine-driven emergency service water pumps. One or more pumps are required to operate, depending on the particular event or single failure assumed, to supply water to control any of the accidents or events listed in Table 9.9-1.

The charging pump service water system cannot be disabled totally by a single passive failure. With the exception of the single discharge header common to both units, the system has been designed with cross-connect piping and sufficient valves so that any single passive failure can be isolated as necessary to allow the system to continue to operate and provide cooling water to support operation of at least two charging pumps. If a passive failure of the seismically qualified discharge header occurs, the system can still fulfill its safety-related design basis function without requiring operator action. In the redundant portions of the system, the isolation of a single passive failure and re-arrangement to continue to provide cooling water must be performed manually by the plant operators. In addition, the standby charging pump may have to be placed in operation, since isolation of the single passive failure might prevent cooling water from reaching the operating charging pumps. The complete system is expected to be accessible during an accident; however, if the course of an accident were to result in gross fuel failure, the local area radiological dose rates may substantially restrict access. For this situation, acceptable operation of the charging pump service water system can continue without isolation of credible passive failures.

9.9.4 Tests and Inspections

Periodic testing confirms that proper operation and safety signal actuation of the service water system valves in the lines supplying the recirculation spray heat exchangers is maintained.

The design head capacity characteristics of the service water system were verified by determining flows through the recirculation spray heat exchangers during initial start-up testing and subsequent special tests.

The diesel-driven emergency service water pumps are tested in accordance with the station's Inservice Testing Program to ensure availability when needed. In addition, one diesel-driven pump is operated during tornado warning periods or at any time when it is thought that the backup operation of this pump materially contributes to the safety of the station.

The starting batteries, alternators, and blocking diodes for the diesels are periodically checked. The batteries are checked for specific gravity and voltage. Over a period of time, these tests will indicate weak or weakening trends in any cell, and replacement will be made, as necessary. In addition, the batteries are replaced per manufacturer's recommendation on a fixed maintenance schedule. The alternators are checked to ensure their ability to maintain a float charge on the starting batteries. The blocking diodes are checked to ensure current blockage and pass through capability has not been impaired.

9.9 REFERENCES

1. *Hydrology of the James River Estuary with Emphasis upon the Ten-Mile Segment Centered on Hog Point, Virginia,* A report Prepared for Virginia Electric and Power Company, Richmond, Virginia, As Supporting Material for the Preliminary Safety Analysis Report Surry Nuclear Power Station, Pritchard-Carpenter, Consultants.
2. Nuclear Regulatory Commission Letter, Serial #88-790, *Service Water System Design at Surry, Units 1 and 2,* dated 11/21/88.
3. *NUMARC 87-00, Rev. 1, Guidelines and Technical Bases for NUMARC Initiatives Addressing Station Blackout at Light Water Reactors,* dated August 1991.
4. Stone & Webster Engineering Corporation Calculation. 149378000, M-4, Rev. 2, *Extreme Weather/Hurricane Shutdown Analysis of Service Water Profile and Heat Transfer Capabilities*.

9.9 REFERENCE DRAWINGS

The list of Station Drawings below is provided for information only. The referenced drawings are not part of the UFSAR. This is not intended to be a complete listing of all Station Drawings referenced from this section of the UFSAR. The contents of Station Drawings are controlled by station procedure.

	Drawing Number	Description
1.	11448-FM-071A	Flow/Valve Operating Numbers Diagram: Circulating and Service Water System, Unit 1
	11548-FM-071A	Flow/Valve Operating Numbers Diagram: Circulating and Service Water System, Unit 2
2.	11448-FM-071B	Flow/Valve Operating Numbers Diagram: Circulating and Service Water System, Unit 1
	11548-FM-071B	Flow/Valve Operating Numbers Diagram: Circulating and Service Water System, Unit 2
3.	11448-FM-071C	Flow/Valve Operating Numbers Diagram: Circulating and Service Water System, Unit 1
4.	11448-FM-071D	Flow/Valve Operating Numbers Diagram: Circulating and Service Water System, Unit 1

Table 9.9-1
AUTOMATIC OPERATION OF CONDENSER AND SERVICE WATER VALVES

	Initial Valve Action	
Accident or Event	Service Water Valve	Main Condenser Valves
Loss of coolant, either unit, and total loss of offsite power (design-basis accident)	a. Open recirculation spray heat exchangers[a] to the affected unit	Close all valves on affected unit/throttle outlet valve on unaffected unit
	b. Close all others on affected unit/unaffected unit remains as-is	
Loss of coolant, either unit, without a loss of power to the affected unit[b]	a. Open recirculation spray heat exchangers[a] to the affected unit	All valves remain as-is both units
	b. All others remain as-is	
Total loss of offsite power	a. All valves remain as-is	Throttle outlet valves, both units
Loss of intake canal level	a. Recirculation spray heat exchangers [a] remain as-is	Close all valves, both units
	b. Close all others, both units	

a. Recirculation spray heat exchangers valves include SW inlet and outlet to each heat exchanger and SW supply from CW system.
b. A loss of power to the unaffected unit will cause the condenser outlet valves for that unit to throttle.

Table 9.9-2
SERVICE WATER REQUIREMENTS

	Flow gpm	Heat Transfer 10^6Btu/hr	No. of Exchangers Operating	No. of Exchangers Furnished
I. Normal Operation				
Component Cooling System[a]	18,000	100.6	2 (one for each unit)	4 (two for each unit)
Bearing Cooling System	48,000	144	4 (two for each unit)	6 (three for each unit)
Control Room Air Conditioning	501 [b]	1.94	2 (one for each unit)	5
Charging Pump:				
Lube-Oil Coolers	10 [c]	-	2 (one for each unit)	6 (three for each unit)
Intermediate Seal Coolers	20 [c]	-	4 (two for each unit)	4 (two for each unit)
II. LOCA Conditions				
Recirculation Spray System	12,280[d]	300 [e]	4 [f](four for each accident unit)	8 (four for each unit)
Component Cooling System	[g]		2 (non-accident unit)	4 (non-accident)
Control Room Air Conditioning	501 [b]	1.94	2 (one for each unit)	5
Charging Pump:				
Lube-Oil Coolers	20 [c]	-	4 [h]	6 (three for each unit)
Intermediate Seal Coolers	20 [c]	-	4 (two for each unit)	4 (two for each unit)

a. Flow and heat transfer rates are based on 2 heat exchangers operating at conditions appearing on the vendor data sheet. Typically, 4 CCHXs are aligned with throttled service water flow, as required to maintain component cooling supply temperature within design limits.
b. Peak flow required for design maximum load. Actual flow will normally be less and vary seasonally. A nominal 60 gpm service water flow rate is also supplied for backwashing the supply side strainers.
c. Flow rates are based on satisfying heat duty requirements. Actual flow rates on some coolers will be higher due to unbalanced parallel flow paths.
d. During a LOCA with a LOOP four RSHXs on the accident unit will initially operate, but only two RSHXs are required. Flow rate stated is based on 2 heat exchangers operating at an intake canal elevation of 17.2 feet. Actual flow rates will vary as a function of the intake canal level.
e. Heat transfer is based on a total of 2 heat exchangers operating (minimum ESF). Actual heat transfer rate will vary, depending on the time after accident initiation. Due to the time dependent SW flow rates through the heat exchangers, the heat transfer rate stated is not coincident with the indicated flow.
f. The maximum number of heat exchangers that can be operating at any given time is 4, which is based on the design basis event.
g. Depending on the initial conditions and the elapsed time after an accident, one or two CCHXs may be in service with throttled SW flow.
h. Three lube oil coolers are in service for the accident unit with one cooler in service for the non-accident unit.

Table 9.9-3
CHARGING PUMP SERVICE WATER SYSTEM

Charging pump service water		
Number	2 per unit	
Type	Centrifugal, in-line, single-stage	
Motor horsepower	7.5 hp	
Seal	Single Mechanical	
Capacity	90 gpm	
Head at rated capacity	60 ft	
Design pressure	150 psig	
Design temperature	250°F	
Materials		
Pump casing	316 Stainless Steel	
Shaft	316 Stainless Steel	
Impeller	316 Stainless Steel	
Charging pump intermediate seal cooler		
Number	2 per unit	
Duty, each	44,546.9 Btu/hr	
	Shell	Tube
Design pressure	56 psig	200 psig
Design temperature	150°F	350°F
Operating pressure	25 psig	40 psig
Operating temperature, in/out	106/105°F	95/97°F
Material	Cast Iron	70/30 Copper-Nickel
Fluid	Component Cooling Water	Service Water
Design Code	ASME Section VIII	ASME Section VIII

Figure 9.9-1
SERVICE WATER SYSTEM

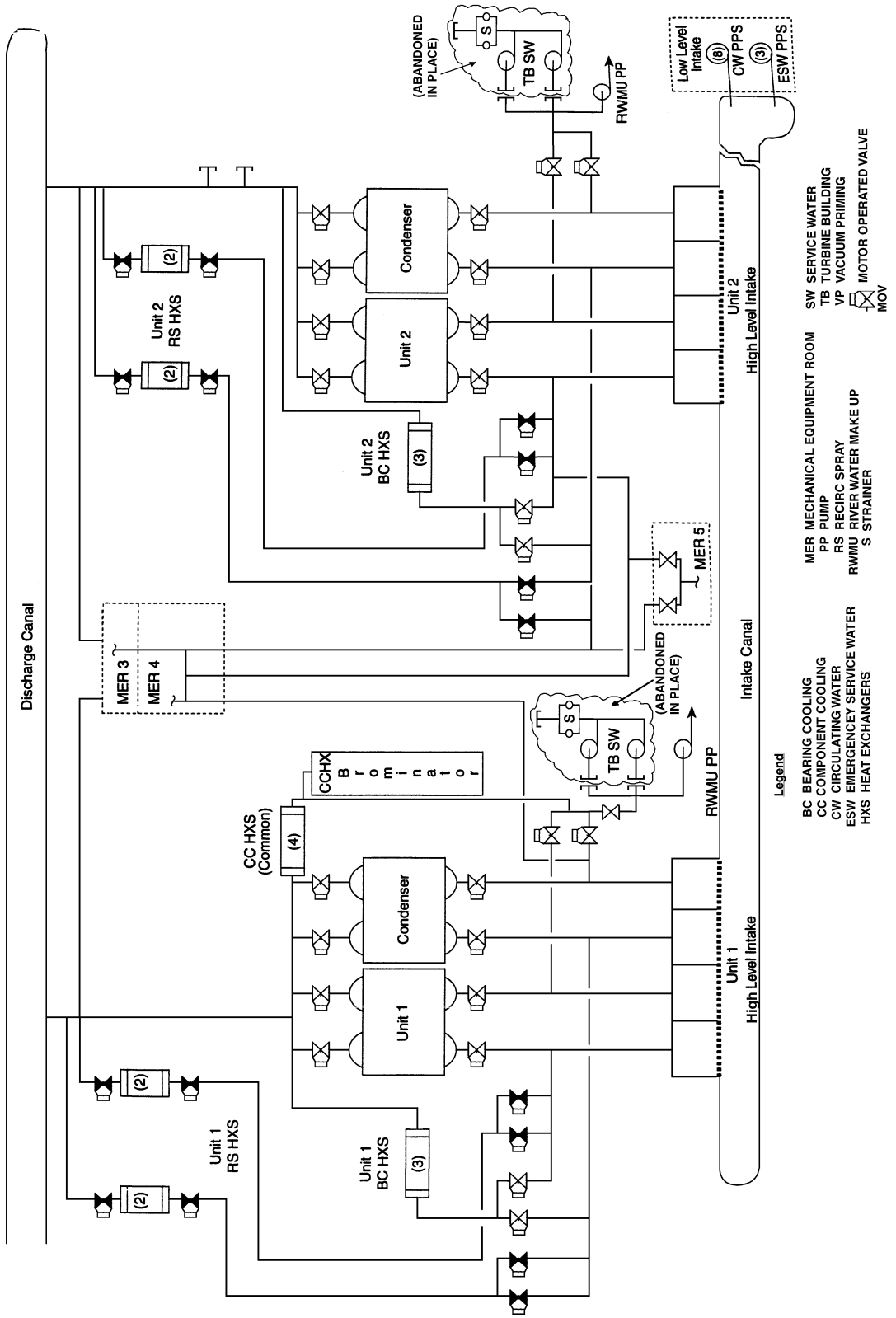

9.10 FIRE PROTECTION

9.10.1 Design Bases

The basic regulatory criterion for fire protection is set forth in 10 CFR 50, Appendix A, General Design Criterion 3. The station's fire protection program for Surry Power Station satisfies the regulatory criteria set forth in General Design Criterion 3, in 10 CFR 50 Appendix R (Sections III.G, III.J, III.L and III.O), and in Appendix A to Branch Technical Position APCSB 9.5-1 dated August 23, 1976.

Compliance with these criteria is contained in the following documents:

1. *10 CFR 50 Appendix R Report, Surry Power Station, Units 1 and 2* includes the description of systems, equipment, and manpower required for safe shutdown (Chapters 3, 5); the fire hazards analysis (Chapters 2, 4, 8); major commitments that form the basis for the fire protection program (Chapters 1, 6); engineering evaluations and exemption requests from Appendix R (Chapter 7); and the safe shutdown circuit analysis (Chapter 9).
2. *Fire Protection Program* document and the associated Administrative Procedures describe the administrative and technical controls, the organization, and other plant features associated with fire protection.
3. NRC's *Fire Protection Safety Evaluation Report, Surry Power Station, Units 1 and 2,* dated 9/19/79.
4. NRC's Safety Evaluation Report for Sections III.G and III.L of Appendix R, dated 12/4/81, and Supplemental Safety Evaluation Report, dated 11/18/82.
5. NRC's *Safety Evaluation by the Office of Nuclear Reactor Regulation Relative to Appendix R Exemptions Requested,* Surry Power Station, Units 1 and 2, transmitted by letter dated 2/25/88.
6. NRC's *Safety Evaluation by the Office of Nuclear Reactor Regulation, Surry Power Station, Units 1 & 2, Post-Fire Safe Shutdown Evaluation, Appendix R,* July 23, 1992.

Changes to the 10 CFR 50 Appendix R Report and Administrative Procedures are evaluated in accordance with 10 CFR 50.48. Consistent with the facility operating license, changes to these documents may be made without prior approval of the Nuclear Regulatory Commission provided the change does not adversely affect the ability to achieve and maintain safe shutdown in the event of a fire. The acceptance criteria for this assessment are that (a) the level of fire protection is not being diminished, and (b) the change will not adversely affect the ability to achieve and maintain safe shutdown in the event of a fire. If this acceptance criteria is met, then the revision is made.

The Surry fire protection program is intended to satisfy the basis regulatory criterion by meeting the following objectives, given the actual plant relationship between combustibles, safety-related equipment, and fire protection features:

1. Reduce the likelihood of fires.
2. Promptly detect and extinguish fires that do occur.
3. Maintain safe-shutdown capability if a fire does occur.
4. Prevent release of a significant amount of radioactive material if a fire does occur.

The Surry fire protection features are generally designed in accordance with the National Fire Protection Association code of record to furnish water and other extinguishing agents throughout the plant. The types of fire protection features have historically been based on the recommendations of the Nuclear Energy Property Insurance Association, and provide the following:

1. Supply of water for fire fighting.
2. System for delivery of water to potential fire locations.
3. Automatic fire or smoke detection in the more critical areas.
4. Fire extinguishment by fixed equipment activated automatically or manually.
5. Manually operated portable fire-extinguishing equipment at strategic locations.
6. Fire barriers.

The following components are designed to Class I criteria (Section 15.2.1):

1. Engine-driven fire pump.
2. Diesel oil tank for engine-driven fire pump.
3. Yard hydrant piping.

Fire protection system design data are given in Table 9.10-1.

In addition to its primary function, the fire protection system also provides alternate sources of makeup water to certain other plant systems as follows:

1. Auxiliary Feedwater System. This interconnection can be used for the fire protection system to provide an emergency water supply to the suction of the Unit 1 and Unit 2 Auxiliary Feedwater Pumps.
2. Spent Fuel Pool. A normally covered outlet above the spent fuel pool is supplied from the fire protection system for emergency makeup water to the pool.

3. Bearing Cooling Water System. The fire protection system can be used as a backup water source to the bearing cooling water system for cooling the instrument air compressors and the service air compressors (Section 9.8.2 and 10.3.9.3).

These secondary functions of the fire protection system do not prohibit the system from performing its primary function. In accordance with BTP-APCSB 9.5-1, Appendix A, Paragraph A.4, postulated fires need not be considered concurrently with other plant accidents.

As previously stated, part of the regulatory criterion is compliance with Appendix A to BTP APCSB 9.5-1. Section F to Appendix A, *Guidelines for Specific Plant Areas,* identifies the specific areas of the plant that require fire suppression systems. Section F.18, *Miscellaneous Areas,* states "Miscellaneous areas such as records storage areas, shops, warehouses, and auxiliary boiler rooms should be so located that a fire or effects of a fire, including smoke will not adversely affect any safety related systems or equipment." Section F.18 does not require a fire suppression system but relies on building location to protect safety related systems and equipment. The following fire suppression systems are not required for compliance to regulatory criterion since the areas they protect meet Section F.18 and do not adversely affect safety-related structures, systems or components or affect safe shutdown capability in the event of a fire.

Administration Building Sprinkler System
Construction Clean Change Building Sprinkler System
Fabrication Shop Sprinkler System
Fuel Oil Storage Tank Foam System
Gravel Neck Combustion Turbine Facility Sprinkler System
Local Emergency Operating Facility Sprinkler System
Paint Shop Sprinkler System
Records Vault Sprinkler System
Security Building Sub-Floor Halon System
South Annex Sprinkler System
Station and Chemical Warehouse Sprinkler System
Surry Nuclear Information Center (SNIC) Sprinkler System
Training Center Halon and Sprinkler System
Warehouses (1, 2, 7, and 8) Sprinkler Systems

9.10.2 Description

An arrangement drawing of the fire protection system is provided in Figure 9.10-1.

9.10.2.1 Fire Detection and Signaling

There are three multi-zone fire detection systems and a single-zone fire detection system at the Low Level Intake Structure. The detection systems utilize ionization-type smoke-sensing units. Two of the multi-zone fire detection systems utilize smoke detectors connected to hardwire type alarm panels, and the third multi-zone fire detection system utilizes smoke detectors and

thermal detectors connected to a multiplex-type alarm system. The single-zone fire detection system at the Intake Structure is a hardwire type alarm panel.

System 1 is a multi-zone system and contains the following zones for Unit 1:

1. Switchgear room.
2. Cable tray room.
3. Station conference room.
4. [deleted]

System 2 is a multi-zone system and contains the following zones for Unit 2:

1. Switchgear room.
2. Cable tray room.

The other multi-zone smoke detection system is a multiplex-type central fire alarm system, installed in accordance with the guidelines of National Fire Protection Association (NFPA) Standard 72D-1975. A fire protection panel installed in the Control Room contains the central processing unit for the system, the operator's console, an alarm printer, and a graphic annunciator panel. The detectors for each zone are connected to local multiplex panels located throughout the plant. The system contains the following zones:

1. Reactor Containment (Units 1 and 2)
   - Cable penetration area (includes thermal detectors)
   - Recirculation Air System ducts.
2. Emergency Switchgear and Relay Rooms (Units 1 and 2)
3. Auxiliary Building
   - Charging pump cubicles general area
   - Charging pump cubicles exhaust ducts
   - Elev. 45'-10"
   - Elev. 27'-6"
   - Elev. 13'-0"
   - Elev. 2'-0" above the charging pump cooling water pumps
   - Solid Waste Drumming Room
   - S. E. and S. W. cubicle exhaust ducts

4. Containment Spray Pump House (Units 1 and 2)
   - Upper Level
   - Basement Level
5. Main Steam Valve House (Units 1 and 2)
6. Safeguards Building, Elev. 19'-6" (Units 1 and 2)
7. Control Room Complex
8. Fuel Building, Elev. 6'-10"
9. Decontamination Building, vent system exhaust duct
10. Fire Pump Building
11. Mechanical Equipment Room 3
12. Battery Rooms 1A, 1B, 2A, 2B
13. Security C.A.S. Building (includes thermal detector)
14. Condensate Polishing Building - above MCCs
15. Boron Recovery Pump House
16. Technical Support Center
    - Main Area (includes one thermal detector)
    - HVAC Room
    - Battery Room
    - Electrical Room
17. Black Battery Building
18. Laundry Building (includes thermal detectors)
19. Cable Vault (Units 1 and 2)
    - Penetration Area
    - General Vault Area
    - MCC Room
20. Service Building Cable Tunnel (Units 1 and 2)
    - North South Cable Tunnel
    - East West Cable Tunnel
    - Service Building Cable Vault

21. Mechanical Equipment Room No. 5
22. AAC Building (includes smoke and thermal detectors)

Two heat detectors have been installed in the charcoal filter of each unit in the gaseous waste disposal room of the auxiliary building. Also, two smoke detectors have been installed in the charging pump service water pump room in the Unit 2 turbine building basement. These detectors annunciate in the control room, but are not interconnected with the station's central fire alarm systems.

The fire detection system is powered from normal station service distribution panels. On loss of power an emergency 12V or 24V battery power unit supplies power to the detectors. The emergency power unit consists of a 12V or 24V battery, battery charger, a static inverter and an automatic switching control capability. Normal power is restored automatically following recovery from a loss of offsite power.

Upon actuation of an individual detector for a multi-zone fire alarm panel, an alarm signal is transmitted to one of the three fire alarm panels at the rear of the control room, where the signal is visually annunciated by zone and an audible alarm is initiated.

Activation of sprinkler and deluge extinguishing systems also annunciates an alarm (by zone) on the multi-zone fire alarm panels in the control room. The CO_2 extinguishing systems annunciate an alarm (by zone) on the station's multiplex-type fire alarm and detection system. The fire alarm panel and CO_2 extinguishing system at the Intake Structure alarm on an annunciator window in the front of the control room.

The fire detection and alarm system is electrically supervised. Trouble indication is initiated at the control panels in the event of loss of power, undervoltage, shorted/open circuits, or ground faults.

9.10.2.2 **Fire Control Systems**

9.10.2.2.1 Water Storage Tanks

Water for fire fighting is obtained from two 300,000-gallon water storage tanks each with 250,000 gallons reserved exclusively for the fire protection system, and 50,000 gallons in the upper portion of the tanks available for domestic water use. Each tank has a separate line to the suction header of the fire pumps located in the adjacent fire-pump house. The lines from the tanks to the suction header are equipped with isolation valves that can be closed to prevent both tanks from draining in the event of a leak. The tanks are supplied from two wells.

9.10.2.2.2 Fire Pumps

Individual 16-inch suction lines, adequately separated, are provided from each of the two water storage tanks to the fire-pump house, which is situated adjacent to the tanks. Two horizontal shaft, centrifugal fire pumps are installed in the pump house, each with a design capacity of

2500 gpm at a total dynamic head of 231 feet. One of the fire pumps is diesel-engine-driven and is supplied from a 300-gallon fuel tank that is capable of supplying the unit for over 8 hours of running time. The second fire pump is electric-motor-driven, with power supplied from the normal plant electrical system.

The firewater system is normally pressurized by a 30-gpm pressure maintenance pump and hydropneumatic tank that is automatically cycled to maintain 100 to 110 psig. The motor-driven and diesel-driven pump operate automatically and sequentially. The motor-driven pump will start automatically when the fire main pressure drops below 89 psig. A further drop of pressure in the fire water system will automatically start the diesel-driven fire pump. The diesel-driven fire pump will also start automatically upon a loss of ac control power. Both fire pumps may be manually started from the control room. The status of the fire pumps is indicated in the control room and at the fire pump control panels in the pump house. There are no safety-related cables or equipment in the fire-pump house.

The fire pumps and their ancillary equipment are adequate to deliver the required quantities and pressures of water to the fire protection systems.

The adequacy of the arrangement of the equipment within the fire-pump house is addressed in Section 9.10.4.24.

9.10.2.2.3 Firewater Piping System

The underground yard main system encircling the plant is supplied by two 12-inch lines from the fire-pump house, and is provided with isolation valves at the juncture, enabling either or both fire pumps to discharge into either line supplying the yard main loop.

All yard fire hydrants, automatic suppression systems, and interior fire-hose lines are supplied from the fire main yard loop. Post indicator sectional valves are provided on the loop to permit isolation of sections of the loop without interrupting service to the entire loop.

Fire hydrants with hose houses are provided approximately 250 feet apart around the exterior of the plant. Each hose house contains an inventory of fire-fighting equipment (hose, nozzles, adapters, wrenches, portable lights, etc.), and the doors generally are secured by breakable locks. Hose houses are set on concrete pads to prevent water accumulation and are clear of obstructions to opening properly. The area around the houses is maintained clear of objects that could block access or inhibit the extension of hose during fire-fighting evolutions.

Frostproof hydrants with 6-inch barrels with at least two 2.5-inch hose outlets are connected to the yard loop with 6-inch lead-ins from the yard main loop. A block valve is provided in the line to the hydrant that branches from the auxiliary building fire main feeder. This will allow servicing this hydrant without closing down part of the yard loop. This is the only hydrant for which closing down a portion of the yard loop would interrupt suppression capability to safety-related areas or areas posing a potential hazard to safety-related areas.

Threads on each of the hydrant outlets are compatible with the local fire department hose threads, and the guard posts provide acceptable protection to the hydrants against vehicular traffic.

9.10.2.2.4 Interior Fire Hose Stations

Manual hose stations are located throughout the plant.

Most areas of the plant containing safety-related equipment can be reached by hose stations. Hose stations in the turbine building have sufficient hose to cover all areas of the switchgear rooms and are equipped with nozzles suitable for extinguishing electrical fires. All locations on the 29 ft. 6 in. elevation of the turbine building can be reached by a maximum of 100 feet of 1.5-inch hose from an interior hose station.

The auxiliary building is protected by interior hose stations. To increase reliability, the auxiliary building fire hose system was modified so that the fire hose stations could be supplied from either Unit 1 or Unit 2 turbine building fire suppression headers, in addition to its normal supply from the yard fire main loop. The turbine building hose station at the entrance to the cable tray rooms has sufficient hose to reach all areas of both cable tray rooms and both mechanical equipment rooms. The hose rack outside the cable tray rooms is equipped with a fog-type nozzle suitable for electrical fires. The auxiliary building hose system can also supply, at a reduced flow, the auxiliary building general area exhaust filters should the normal supply from the Unit 1 and 2 turbine building fire protection loop fail.

The reactor containment of each unit is protected with normally dry interior hose stations. The fire hose standpipe system may be filled by opening manual valves in the auxiliary building piping penetration areas.

9.10.2.2.5 Water Suppression Systems

Automatic sprinkler systems are installed at the following areas:

1. Turbine Building, Ground Floor and Mezzanine Levels
2. Turbine Oil Storage Room
3. Auxiliary Boiler Room
4. Portions of the Service Building (Renovated Personnel Areas, Maintenance Services Offices, etc.)
5. Condensate Polishing Building
6. Machine Shop Building
7. Laundry Building
8. Station Warehouse
9. Construction Clean Change Building

10. New Training Center Building
11. LEOF
12. On-line Chemistry Monitoring Computer Room (Pre-action system with smoke detectors)
13. AAC Building (includes smoke and heat detectors)

A manually activated sprinkler system is installed in each unit's Service Building Cable Vault and Tunnel. This system has open heads for protection of cable trays in the high ceiling upper level of the Vault, and closed heads for floor coverage in the lower area of the Vault. Manually initiated deluge systems are provided at the lube-oil reservoir coolers, hydrogen seal oil units, and the turbine lube-oil conditioners. Automatic heat-actuated deluge systems are provided at the main and service transformers and at the auxiliary building charcoal filter 1-VS-FL-14. Heat collector plates are installed per NFPA requirements over sprinkler heads under grating walkways in the turbine building.

The design and installation of these systems conform to the provisions of the National Fire Protection Association Standards 13 and 15. In general, sprinkler and deluge systems have been provided at major concentrations of hazardous combustibles.

Electrical supervision of all automatic fire suppression systems is provided. In the event that any isolation valve in a sprinkler or deluge system is less than fully open, a control room annunciator and a local indicator are actuated. No electrical supervision is provided for normally closed valves in the fire water system.

9.10.2.2.6 Foam Extinguishing Systems

The aboveground steel fuel-oil tank in the yard is provided with a foam fire suppression system capable of applying foam to the surface of the liquid within the tank. Equipment consists of a foam-making eductor, piping to the tank, and supplies of AFFF-type foam concentrate. Adequate supplies of foam are kept on hand.

9.10.2.2.7 Carbon Dioxide Gas Suppression Systems

Low-pressure fixed carbon dioxide suppression systems utilizing a central storage tank capable of two applications are provided at the following areas:

1. Switchgear room, Unit 1.
2. Switchgear room, Unit 2.
3. Service building cable vault, Unit 1.
4. Service building cable vault, Unit 2.
5. Containment cable vault, Unit 1.
6. Containment cable vault, Unit 2.

7. Cable tray rooms, Unit 1.
8. Cable tray rooms, Unit 2.
9. Charcoal filter assembly A.
10. Charcoal filter assembly B.
11. High-pressure turbine bearing enclosure, Unit 1.
12. High-pressure turbine bearing enclosure, Unit 2.
13. Low-pressure turbine bearing enclosure, Unit 1.
14. Low-pressure turbine bearing enclosure, Unit 2.
15. Generator bearing enclosure, Unit 1.
16. Generator bearing enclosure, Unit 2.
17. Emergency generator room 1.
18. Emergency generator room 2.
19. Emergency generator room 3.
20. Motor control center room, Unit 1.
21. Motor control center room, Unit 2.

There are also three separate high-pressure carbon dioxide extinguishing systems utilizing agents stored in cylinders located adjacent to the point of application. These systems protect the fuel-oil pump houses A and B, the emergency service water pump house at the low-level intake structure, and the Technical Support Center (TSC) charcoal filter. The system that protects the charcoal filter in the TSC area is not required for safe shutdown.

The low pressure and high pressure CO_2 systems are provided with heat detectors and with remote manual pull stations. CO_2 systems for Charcoal Filter Assemblies 1-VS-FL-3A and B for Emergency Generator Rooms 1, 2, and 3 are manual systems only, so heat detectors for these two areas provide an alarm only. The CO_2 systems in other areas are actuated by heat detectors. Hand valves on the discharge heads of the high-pressure cylinders or manual activation switch provide manual release of the carbon dioxide gas.

For the high pressure systems, emergency electric power is provided by rechargeable batteries. The battery charger transfer module maintains the batteries at full charge and provides the means of automatically supplying 24V dc emergency power to the system during main power outages.

Areas protected by automatic discharge systems are equipped with predischarge alarms to alert personnel that carbon dioxide flooding is imminent. Carbon dioxide lockout control for personnel protection is installed for the switchgear rooms, cable tray rooms, and service and

containment cable tunnels, intake structure and fuel oil pumphouse. Actuation of a system lockout switch will initiate an alarm on the main control board and at the carbon dioxide system control panel.

All ventilation fans in the protected areas are stopped, and doors and dampers to these areas are closed upon initiation of the carbon dioxide discharge.

9.10.2.2.8 Portable Fire Extinguishers

Fire extinguishers are installed and are maintained in accordance with NFPA 10 and 10A.

9.10.2.2.9 Halon 1301 Systems

Total flooding, Halon 1301 (bromotrifluoromethane) systems are provided for the following areas:

1. Emergency Switchgear and Relay Room, Unit 1 (manual)
2. Emergency Switchgear and Relay Room, Unit 2 (manual)
3. Training Center Building
   a. Computer Room of the Simulator Control Room
   b. Simulator Area
   c. Computer Room of the Local Emergency Operations Facility
4. Under-floor area of the main Security Building

The Emergency Switchgear and Relay Rooms contain equipment required for safe shutdown. The Halon systems for these rooms are described in detail below.

The Halon 1301 System for the Unit 1 and 2 emergency switchgear rooms is a total flooding system (will fill entire enclosure for Unit 1 or Unit 2). Each unit's Emergency Switchgear Room is considered a separate hazard area. The systems are manually operated.

The main bank of Halon storage bottles for each Unit's Emergency Switchgear Room Halon system is located outside the hazard area. The reserve cylinders may be manually connected once the main bank is exhausted if required. The system has been designed in accordance with the requirements of NFPA 12A.

The initial discharge will be completed within seconds and will attain the design concentration level in the protected space. A subsequent discharge will occur to make up for the reduction in Halon concentration due to leakage or dilution by ventilation. The concentration of Halon in air will be maintained for a minimum of 10 minutes. Factors such as uncloseable openings, time required for dampers to close, and general tightness of enclosure have been taken into consideration.

Nozzles have been placed to provide a uniform level of concentration throughout the rooms.

The manual discharge switches are provided outside each protected area. The Unit 2 switch is located near the main entrance to the Unit 2 Emergency Switchgear Room, and the Unit 1 switch is located in Unit 2 Emergency Switchgear Room near the entrance to Unit 1. One push button for each system is also provided in the Control Room Halon Control Panel. Operation of the manual discharge switches causes immediate activation of horns, warning lights, shutdown devices (such as fire dampers) and the pre-discharge timer, which delays system activation for 60 seconds to allow for the exiting of personnel from the ESR before discharging Halon into the room.

In the event of loss of normal power, the control panel will provide battery backup to operate the panel under normal load for 24 hours and then be capable of operating the system for five minutes continuously during an alarm condition.

Both the supply air and exhaust air ducts leading from the Emergency Switchgear Rooms are isolated from the rest of the plant by automatic closing of the fire dampers located in these ducts where they penetrate the ESR enclosure. The recirculating HVAC system will remain in operation to help provide for continual mixing of Halon within the enclosure. Air movement patterns, ceiling configuration and equipment configuration have all been taken into consideration in locating the discharge nozzles.

The Halon 1301 Fire Suppression System is not required to operate during or after a seismic event but portions of the system are seismically supported to prevent possible damage to surrounding safety-related equipment.

The existing structures which interface with the Halon System have been reviewed to ensure that the addition of the Halon System does not have any adverse impact on the seismic qualification of the existing structures, systems, or other components important to safety.

The Emergency Switchgear Rooms (ESRs) are required to meet the requirements of Section III.G.3 of Appendix R. Section III.G.3 requires fire detection and a fixed fire suppression system be installed in the area under consideration. Manually actuated Halon fire suppression systems were installed in the ESRs as part of the modification made to comply with Appendix R. The system design was based on NFPA 12A (Reference 1), and in accordance with paragraph 1-8.1.1, the system can be manually actuated if acceptable to the authority having jurisdiction.

Based on discussion in Generic Letter (GL) 83-33 (Reference 2), the Halon system installed in the ESRs meets the requirements of a fixed fire protection system as required by III.G.3, in contrast to Section III.G.2 which requires an automatic fire suppression system. The installation of a manual Halon system is in accordance with NFPA 12A, 1980 edition. The Halon system meets the definition of a fixed fire suppression system as described by GL 83-33 and the Halon system is expected to extinguish a fire in the ESRs as concluded in NUREG/CR-3656

(Reference 3). In addition, the NRC's Inspection Report (IR) (Reference 4) addressed implementation of 10 CFR 50 Appendix R Sections III.G, III.J, III.L, and III.O at Surry. The IR acknowledged the fixed manual Halon system in the ESRs and concluded the fire area barriers and the fixed detection and suppression systems provided for these areas appear adequate. The ESRs are located beneath the control room thereby providing for prompt response from operations in the event of an alarm allowing the Halon system to be activated with minimal delay.

The Individual Plant Examination for External Events (IPEEE) submittal addressing fire (Reference 5) established an acceptable CDF without taking any credit for detection and suppression of fires in the ESRs. Since the ESRs comply with Section III.G.3, the units can be safely shutdown even in the event of a complete loss of the area. From an IPEEE perspective, the existence of detection and a fixed suppression system in the ESRs provides additional protection, which if modeled in the IPEEE, would result in an even more acceptable CDF.

9.10.2.3 **Ventilation Systems**

9.10.2.3.1 Smoke Removal

No special smoke-exhausting systems are provided at the plant. The normal ventilation systems can be used for smoke removal for some types of fires, even though they are not specifically designed for this purpose.

When normal ventilation systems cannot be used, the fire brigade will use portable ventilation units with flexible ducting for smoke removal.

9.10.2.3.2 Filters

Charcoal filters are used in the auxiliary building ventilation system filters, the Technical Support Center (TSC) ventilation system, the containment iodine charcoal filter units, the gaseous waste disposal system, and the control room emergency ventilation system. The auxiliary building ventilation system contains redundant safety related trains of charcoal filters housed in separate metal cabinets enclosed in separate concrete cubicles. The inlet and outlet dampers on these filter units can be shut to prevent radiation release from a damaged unit and the redundant unit can continue to operate. These units are currently protected by a manually actuated carbon dioxide suppression system. The auxiliary building ventilation system also contains a third, nonsafety-related charcoal filter housed in a separate enclosure. The third charcoal filter unit is protected by an automatic water spray system. The TSC charcoal filter unit is located in the service building in a concrete vault. It is protected by a heat detector system and a carbon dioxide system which may be either automatically or manually operated. The containment iodine charcoal filter units are enclosed in separate structures with 18-inch-thick concrete walls and roof. A fire in the containment iodine or TSC charcoal filter units would have no direct effect on safety-related equipment or cables because of the intervening distance and barriers. The gaseous waste disposal system charcoal filters are housed in a metal enclosure away from safety-related equipment and cables. These filters have heat detectors and can be isolated and air-cooled if subjected to excessive decay heating. The control room emergency ventilation system charcoal filters are

located in the turbine building in a metal enclosure. These filters are isolable from the control room by a normally shut motor-operated damper in the supply pipe to the control room. The only safety-related cable located near the control room emergency ventilation charcoal filter is the power feed to the respective fan motor; therefore, a fire would not affect safe shutdown of the plant.

9.10.2.3.3 Breathing Equipment

There are at least 25 self-contained air-breathing apparatuses (SCBAs) dedicated at all times to fire brigade use. There are in excess of 50 spare air cylinders, rated at 30-minute capacity, available in the plant. Self-contained units are distributed at various locations throughout the plant, with five sets kept at the control room. The use of SCBAs for fire fighting is discussed in Section 11.1.

Air recharging for the fire brigade cylinders is from a twenty-cylinder cascade system that is recharged by an air compressor designed for that purpose. Recharging is carried out in the loss prevention storage room in the service building.

9.10.2.4 **Floor Drains**

In general, measures have been taken to prevent the spread of combustible liquids in the event of leakage from reservoirs and piping. The lube-oil reservoir, lube-oil cooler, and high-pressure control fluid reservoir for each unit are located in a diked area. The only floor drain is isolated by a locked-closed valve. The hydrogen seal oil unit is surrounded by a spillage trench to prevent the spread of lube oil. The two lube-oil storage tanks are located together in a diked area without drains. The fuel tank for the diesel-driven emergency service water pumps is located in a separate diked room, without floor drains. The lube oil conditioning unit and transfer pump for each unit are located in a diked area without floor drains. The wall tank portions of the emergency diesel generator day tanks are each located in a diked area without floor drains. Drains in the diesel generator rooms outside the dikes are plugged and dikes are provided at the doorway to each room. The diesel driven fire pump is located in a diked room and the floor drain is plugged.

Dikes have been provided at all doorways into the emergency switchgear rooms to prevent equipment damage due to water or combustible liquid flooding from adjacent areas. (See Section 9C.1.1.) A 3-inch dike has been provided between Units 1 and 2 emergency switchgear rooms to prevent possible fire protection water in one unit from flooding the adjacent unit. A deflector shield has been placed by the overhead fire main near the entrance to the emergency switchgear room in the turbine building to cause possible leakage flow to be diverted outside the dike (Section 9C.1.2).

Two foot high dikes are erected at the entrances to the charging pump cubicles to prevent pump damage from a transient combustible liquid spill or from possible fire protection leakage (Section 9C.1.2). These measures are adequate to contain leakage to the area of origin.

9.10.2.5 Lighting Systems

In addition to the normal plant lighting system, fixed emergency lighting is provided in the control room and at points of access and egress in the containment, auxiliary building, turbine building, and service building.

A fire could damage both normal and emergency lighting for any area of the plant. To deal with such a situation, emergency lanterns are provided. In addition, several portable emergency lanterns are provided for the exclusive use of the fire brigade.

A post-fire emergency lighting system has been provided for illumination of all areas needed for operation and/or monitoring of safe shutdown equipment, and to assure access/egress routes thereto, after a postulated fire in any area in accordance with the requirements of 10 CFR 50 Appendix R, Section III.J. The capacity of the installed emergency lighting is 8 hours. See Section 8.4.5 for further discussion of lighting systems.

9.10.2.6 Communications System

Reliance is placed primarily on the in-plant telephone system and a loudspeaker page and answer system for normal communications. In addition, a voice-powered telephone system is provided that uses voice-powered headsets and phone jacks installed throughout the plant. Due to loud background noise and the potential for fire damage such fixed systems are not always effective for fire-fighting operations. To overcome these problems, several fixed handsets or portable two-way radios are provided in the control room, the security building, and the Appendix R locker. One or more brigade members would take a two-way radio on the way to the fire scene.

To meet the requirements of 10 CFR 50 Appendix R, an emergency radio communication system is installed. The system provides total plant wide coverage.

The Central Site equipment is considered the primary system and utilizes trunking technology. The Central Site includes normal and backup central controllers, repeaters and antennas located at the microwave tower in the station switchyard. Two conventional backup repeaters are located in the Unit 1 cable spreading room to provide communications in the event of a total Central Site equipment failure. When the backup repeaters are activated from a central control point, designated emergency radios will automatically select their proper channel without user intervention.

Redundant antenna trains with amplifiers are installed throughout the Auxiliary Building and inside both containment structures to improve radio coverage.

The location of system equipment is such that a postulated fire in any one area would only destroy one system.

The communication system also consists of fixed handsets, and mobile and portable handheld units.

Dedicated system pagers are used to call out emergency personnel. Radio desksets used in the control room have telephone interconnects that allow notification of the pagers. A backup paging telephone utilizing a different telephone line is located at the Unit 1 Auxiliary Shutdown Panel.

9.10.2.7 **Electrical Cable**

The cable insulation used for power and control circuits consists primarily of cross-linked polyethylene with neoprene or hypolon jacket. Power circuits for some large components use interlocked armored cable. The flame test standard for cables, Institute of Electrical and Electronics Engineers Standard 383-1974, was not in effect at the time these cables were purchased and installed. However, 5000V and 6000V power cables were tested in accordance with IPCEA Standard 5-19-81, and 1000V control cables and 600V instrument cables were tested in accordance with ASTM D2633. In addition, control and instrumentation cables were required to pass a special flame resistance test detailed by Vepco in the purchase specifications. Based on the results of these tests, flame retardant coatings are not necessarily used on cables installed in the plant. Specifications for cables added in cable trays in recent years since the approval of IEEE 383 have required that the cable meet IEEE 383-1974, unless an evaluation is performed, documented and approved by Engineering.

9.10.2.8 **Fire-Barrier Penetration**

Fire barriers such as walls, floors, and ceilings are penetrated by ventilation ducts, electrical raceways, mechanical piping systems, and doors.

Electrical cable penetrations in fire barriers surrounding safety-related areas throughout the plant are sealed using materials and methods that have been tested by Vepco to verify their effectiveness as a fire barrier. The fire test for penetration seals, as described by Vepco in a fire hazards analysis, utilized a gas burner as a flame source. The test on each specimen was conducted for 3 hours or until flame or hot gases, hot enough to ignite cables, penetrated the top of the sealing material. The test verified that penetration seals meet NRC Branch Technical Position APCSB 9.5-1.

New penetration seals are made using silicone foam or other Engineering approved fire stop material with a 3-hour fire rating. The fire stop material may be used in conjunction with an approved permanent damming material, or in conjunction with temporary damming materials which are removed.

All doors which penetrate fire barriers required for 10 CFR 50 Appendix R are fire-rated. These fire doors are labeled by Underwriter's Laboratories or are addressed in the 10 CFR 50 Appendix R Report, Chapter 7, Exemption Requests, Engineering Evaluations, and Fire Retardant Cable Characteristics.

Most doors to areas containing significant amounts of combustible material are controlled by a magnetic key card locking device to ensure that they remain closed. Leaving one of these

doors open results in an alarm in the security building control room. All members of the fire brigade are provided with magnetic key cards. In addition, keys readily available to security members of the fire brigade can be used to open doors if the magnetic latching mechanism is inoperative and the door failed in the locked position.

As in the case of electrical penetrations, ventilation duct and pipe penetrations have been sealed using methods that are considered adequate for most areas of the plant.

9.10.2.9 **Separation Criteria**

In most cases, redundant safety-related system components (e.g, pumps, diesel generators) are separated by distance or barriers. Cables of redundant safety-related divisions installed in the same area are separated using:

1. Rigid metal conduit (following separate routes where practical).
2. Trays one above the other without barriers when the trays are more than 4 feet apart.
3. Trays one above the other with barriers or tray covers when the trays are 4 feet or less apart.
4. Trays side by side with barriers.

Solid metal tray covers or equivalent have been provided on all cable trays where the separation of redundant safety-related cables does not meet the guidelines of Regulatory Guide 1.75 in the following areas: emergency switchgear rooms, cable vault and tunnels, cable tray spreading rooms, and auxiliary building. Also, solid metal tray covers or equivalent have been provided on cable trays in the reactor containment building cable penetration area. A barrier consisting of a fire resistive material has been provided between cable trays in the safeguards area where the separation does not meet the guidelines of Regulatory Guide 1.75.

Equipment and cable that is required for safe shutdown following a fire is identified in the 10 CFR 50 Appendix R Report, Chapter 3, *Safe Shutdown Systems Analysis,* and Table 9-2 of Chapter 9, *Electrical Associated Circuits & Separation Analyses,* respectively. Physical and electrical separation is provided between redundant or alternate shutdown components as described in 10 CFR 50 Appendix R Report, Chapter 4, Chapter 7, and Chapter 9.

9.10.2.10 **Fire Barriers**

Most of the Appendix R fire barriers in the plant are concrete or block with 3-hour fire resistance, or have evaluations that demonstrate equivalence to a 3-hour rating.

9.10.2.11 **Access and Egress**

All safety-related areas except the safeguards areas, service building cable vaults, fuel-oil pump houses, reactor containment buildings, and intake structure are reasonably accessible for manual fire fighting. Components within the safeguards area are adequately separated such that an increased response time from the fire brigade will not delay safe shutdown of the plant. A manual sprinkler system has been added in the service building cable vault such that the need for manual

fire fighting is minimized. The fuel-oil pump houses are adequately protected by fixed suppression systems. During normal operation the containment is sealed, and special procedures are followed to gain access through a personnel air-lock. Since the intake structure is located 1.25 miles from the plant buildings, fire-fighting personnel and equipment must be transported to the intake structure. See Section 8.4.5 for discussion of features of the post-fire emergency lighting system which assures access and egress in accordance with the requirements of 10 CFR 50 Appendix R.

9.10.2.12 **Toxic and Corrosive Combustion Products**

The products of combustion of many polymers are toxic to humans and corrosive to metals. Prompt fire detection and extinguishment are relied on to minimize the quantity of such products. Additionally, means for smoke removal are provided as discussed in Section 9.10.2.3.1. The fire brigade is also provided with and trained in the use of emergency breathing apparatus for manually fighting fires involving such materials.

9.10.3 Evaluation of Plant Features

There are several combinations of safe-shutdown systems available in either unit that are capable of shutting down the reactor and cooling the core of either unit during and subsequent to a fire. The combinations available in a fire shutdown will depend upon the location of the fire and the effects of the fire on such systems, their power supplies, and their control stations. To ensure the safe shutdown of the reactor plants, those systems and components which insert negative reactivity into the reactor core, control cooldown of the primary reactor coolant system, and maintain reactor coolant inventory should be protected in the event of a fire, and measures should be taken to ensure their availability.

The general functional requirement for safe shutdown, and the system auxiliaries, major components, and instrumentation required to fulfill these requirements are described below.

9.10.3.1 **Reactivity Control**

The rod control system is of a fail-safe design. Faulting in the system circuits trips the reactor. Following the reactor trip, soluble poisons are added to the primary coolant system to ensure subcriticality. This is accomplished by using a charging pump to inject borated water from the boric acid system, if available, or from the refueling water storage tank into the reactor coolant system. There are three charging pumps per unit, one of which is required for reactivity control. In addition, a charging system cross-connect is installed to allow the use of the opposite unit's charging pumps for cooldown following an accident (Section 9.1.3.1).

In providing reactivity control, the boric acid solution is transferred from the boric acid tanks by the boric acid transfer pumps to the suction of the charging pumps. Alternatively, borated water can be supplied directly to the suction of the charging pump from the refueling water storage tank of either unit. Normally, operation of the charging pump requires operation of the charging pump cooling water and service water systems. The charging pump cooling water

system provides a source of cooling for the charging pump mechanical seals. This system is cooled in turn through a heat exchanger by the charging pump service water system. The charging pump service water system also provides cooling directly to the charging pump lube-oil cooler. In the event of a fire, the charging pump cooling water system is not required for safe shutdown (since the charging pump suction would be from the cold water in the RWST), but the charging pump service water system is required for hot and cold shutdown as explained in the 10 CFR 50 Appendix R Report, Chapter 10, Engineering Evaluations.

9.10.3.2 **Reactor Coolant System Inventory Control**

Following a reactor shutdown or trip, the reactor coolant system water inventory is maintained by operation of the charging pumps. Reactor primary-grade water is added with boric acid solution to provide makeup for normal primary system leakage and shrinkage. The primary-grade water is transferred from the primary-grade water tanks by the primary-grade water supply pumps to the blender, located on the discharge of the boric acid transfer pumps. The primary-grade water supply pumps are not safety-related, and in the event of a loss of offsite power that would disable these pumps, the refueling water storage tanks would be used as the source of makeup water. Primary coolant letdown may be isolated, and the charging pump can be operated to maintain pressurizer level, which would otherwise decrease due to coolant contraction during cooldown. The charging pumps will provide reactor coolant makeup through the normal charging path or through the reactor coolant pump seal injection path or both. Operation of the reactor coolant letdown systems is not required to maintain pressurizer level, however an alternate means of reactor coolant letdown can be used as noted in Section 9.10.3.3.

During normal operation, seal injection flow from the chemical and volume control system is provided to cool the reactor coolant pump seals, and the component cooling water system provides flow to the thermal barrier heat exchanger to limit the heat transfer from the reactor coolant to the reactor coolant pump internals. In the event of loss-of-offsite power, the reactor coolant pump motor is de-energized and both of these cooling supplies are terminated; however, the diesel generators are automatically started and seal injection flow is automatically restored within seconds. Component cooling water to the thermal barrier heat exchanger, however, must be manually reinitiated. Either of these cooling supplies is adequate to provide seal cooling and prevent seal failure due to loss-of-seal cooling during a loss-of-off-site power for at least 2 hours.

9.10.3.3 **Decay Heat Removal**

Following a normal plant shutdown, the condenser steam dump system bypasses steam to the condenser to provide cooldown. If the condenser steam dump is not available, power operated relief valves on the main steam lines will provide cooldown by relieving main steam to the atmosphere. These power operated relief valves are backed up by code safety valves on each steam generator. For decay heat removal following a reactor trip, it is necessary only to maintain control of one steam generator. For the continued use of the steam generator for decay heat removal, it is necessary to provide a source of water and means of delivering that water. The auxiliary feedwater pumps (two motor-driven pumps and one turbine-driven pump per unit) are

provided to deliver the water. The power and control cables for these pumps are located in the same fire zone at a number of points (i.e., containment spray, auxiliary feedwater, and main steam valve area, and the emergency switchgear and relay rooms). A fire in one of these areas could disable all three auxiliary feedwater pumps of a given unit; however, in the event of such a fire, there exists the alternative of providing auxiliary feedwater from the opposite unit. Since these cross-connect valves are not located in an area that would be affected by a fire that could damage the auxiliary feedwater pumps or cables for one unit, the auxiliary feedwater pumps of the opposite unit would be available to supply water to the steam generator being used for decay heat removal. A fire in one of these areas could disable remote operation of all three power operated relief valves on the main steam lines of a given unit. However, in the event of such a fire, there exists the alternative of locally operating the power operated relief valves using a portable air source and quick-connect instrument fittings provided at the valves.

For cooldown of the reactor coolant to a temperature of less than 200°F, the residual heat removal system is used. The residual heat removal system consists of redundant heat exchangers, pumps, and associated piping, valves, and instruments. A QA Category II, Seismic Class 1 radiant energy shield is installed between the residual heat removal pump motors to protect one of the two motors in the event of a motor fire. This shield ensures that at least one residual heat removal pump is available for the safe shutdown of the unit. A post-fire repair will be used to restore power to the RHR pump motors in the event a fire disables both pump's cables or power supplies.

Adequate subcooling can be maintained by cooling the reactor coolant system faster than the pressurizer is being cooled and depressurized by ambient heat without the use of pressurizer heaters. Loss of pressurizer heaters would only accelerate plant cooldown. The resultant cooldown rate would be within Technical Specification limits.

To insure compliance with 10 CFR 50 Appendix R for providing plant cooldown capability following a postulated fire, certain valves in the chemical and volume control system, the residual heat removal, and the component cooling water system are required to be functional in order to provide an alternate means of reactor coolant letdown, pressurizer pressure control, and decay heat removal. These valves, which are identified in Section 9.1.2.1, 9.3.2.1, and 9.4.3.1, are equipped with quick-disconnect instrument air fittings so that they may be operated locally with a portable air source.

9.10.3.4 **Auxiliaries**

Auxiliaries required for safe shutdown include the component cooling system, the service water system, the circulating water system, certain ventilation systems, and appropriate instrumentation and power supplies. Multiple outside sources of power are available to the plant for both normal operation and shutdown functions. Normal operations may utilize either offsite or unit-generated power. The power supplies to redundant safe shutdown equipment are electrically separated. Emergency diesel generators supply power for shutdown operations when offsite or unit-generated power is not available.

The fuses supplying 125V dc control power to the safety-related 4160V and 480V circuit breaker close and trip circuits are sized to provide electrical coordination between the fuses and the feeder and load breakers. The original fuses were replaced by smaller fuses to eliminate the possibility of causing the loss of the 4160V or 480V switch gear control circuitry. This modification assures availability of power sources to safe shutdown equipment in accordance with 10 CFR 50 Appendix R.

The component cooling water pumps may be cross connected to serve either unit. Component cooling water system operation is not required for hot shutdown.

The circulating water and service water systems are required for cold shutdown in order to supply cooling to certain safe shutdown components such as the component cooling water heat exchangers, and the air conditioning and chilled water condensers.

Ventilation is required for several areas of the plant during safe shutdown operations in order to protect electrical equipment from heat damage and allow access for operator actions (such as in the control room, emergency switchgear room, and auxiliary building).

9.10.3.5 Instrumentation and Control

An auxiliary shutdown panel located in each emergency switchgear room has control switches for the following functions:

1. Emergency boration valve.
2. Auxiliary feedwater pumps and associated discharge valves.
3. Charging pump.
4. Pressurizer heaters.

Complete electrical isolation from the Control Room is provided for those circuits on the auxiliary shutdown panels which are required for safe shutdown. Appendix R isolation panel (AS-2) is located in MER-5. In the event the control room becomes uninhabitable, chillers 1-VS-E-4D and 4E control power can be locally controlled.

The Remote Monitoring Panels, located in the Unit 1 Cable Spreading Room, have vital process instrumentation for both Units 1 and 2. Cabling for this instrumentation is independent of the cabling for similar instrumentation in the Control Room. (See Section 7.7.2.)

Emergency Condensate Storage Tank Level can be monitored via indication on the tank. Refueling Water Storage Tank Level is not required to be monitored during safe shutdown following a fire (see NRC's Safety Evaluation dated 2/25/88 regarding exemption requested).

9.10.3.6 Effects of Fire Suppression Systems on Safety Systems

The following effects have been reviewed: (1) breaks in fire protection piping that may result in water flooding damage to safety-related equipment; (2) cracks in fire protection piping

that may result in water spray damage to safety-related equipment, or that may impair suppression capability of both primary and backup means of suppression; and (3) inadvertent fire protection system actuation that may result in damage to safety-related equipment.

In most areas, curbs, drains, and the mounting of equipment above the floor level minimizes the potential for flooding damage. In other areas, water will drain out doors or via stairways or through grating to lower elevations, so that the standing water would not affect safety-related equipment. In addition, valves have been provided to isolate sections of piping inside buildings to preclude the buildup of water and thus prevent equipment from being incapacitated due to flooding.

Water flows from automatic fire suppression systems are annunciated on the fire panel in the control room. Flow from manual hose stations is not annunciated but will cause the fire pump to start, thereby transmitting a “fire pump running” signal to the control room. A flow from the fire protection water system can thus be inferred.

There is some safety-related equipment in various areas of the plant that would be vulnerable to the effects of water spray. There are, however, no fixed water suppression systems in these areas.

9.10.4 Evaluation of Specific Plant Areas

9.10.4.1 Control Room Complex

The control room complex is an area approximately 52 feet by 104 feet located at grade level adjacent to the turbine building, between the turbine building and the auxiliary building. The complex consists of the control room, the control room annex, office area and toilet, the Unit 1 and Unit 2 control room air-conditioning equipment rooms, and the Unit 1 and Unit 2 computer rooms.

The only spaces within the control room complex that contain safety-related equipment are the separate Unit 1 and Unit 2 control room air-conditioning rooms, and the single control room that serves both units. Each air-conditioning room contains two 100%-capacity air-handling units for the control room complex. The control room is a continuously manned station that contains all of the instrumentation and control equipment necessary to operate the plant under both normal and abnormal conditions. This equipment includes the redundant control cables, indicating instruments, and control switches used to trip the reactor and to maintain it in a safe-shutdown condition.

An auxiliary shutdown panel located in each emergency switchgear room contains control switches to facilitate shutdown in the event of damage to control room equipment or a forced evacuation of the control room. A remote monitoring panel located in the Unit 1 Cable Tray Room contains process instrumentation to facilitate safe shutdown, and emergency diesel generators No. 1 and No. 2 are provided with local control panels which are electrically isolated from the Control Room. These and other features provide an alternative safe shutdown capability

in the event of a fire in the Control Room in accordance with 10 CFR 50 Appendix R. The residual heat removal pumps and the component cooling water pumps are normally controlled from the control room. In the event of a control room evacuation the pumps for both systems can be operated at the switchgear in the emergency switchgear room. See Section 7.7.2 for discussion on compliance with 10 CFR 50 Appendix R. Other modifications made as a result of 10 CFR 50 Appendix R requirements provide the operator with the capability of manually closing the main steam line trip valves from either the control room or the emergency switchgear room. The steam generator power operated relief valves can be closed using key-operated switches located in the unit's cable vault or the valve positioner controller located in the MCR. These redundant controls allow valve closure in the event that one of the control methods has sustained damage due to a fire or the area where the control is located must be evacuated. See Section 10.3.1.2 for additional discussion of this modification which is in accordance with 10 CFR 50 Appendix R requirements.

The combustible material in the control area consists of a moderate amount of electrical cable insulation, parts of electrical components in panels and consoles, desktops on the SRO console and Plant Computer System consoles, parts of computer terminals, carpeting, anti-fatigue flooring, and a moderate amount of Class A combustibles such as log books, drawings, operating procedures, and computer printouts.

The control room complex is bounded on all sides by concrete, which provides a 3-hour-rated fire barrier. Ventilation ducts that penetrate the boundaries are provided with fire dampers. The south wall of the complex, adjacent to the turbine building, contains emergency ventilation ducts constructed of heavy-gauge pipe which may be sealed by motor-operated dampers controlled from the control room. Closure of these dampers will provide adequate protection for the control of smoke and hot gases. Individual spaces within the complex are separated by 8-inch concrete block walls and metal doors with no specified fire rating. The control room is penetrated by ventilation ducts from the control room annex, computer room No. 1, and the control room ventilation rooms, which are provided with manual smoke dampers. Access to the control room is via fire-rated doors. The fire rated doors are from the turbine building walkway to the control room, from the back stairway to the Unit 1 control room air conditioning room, from the back stairway to the rear control room corridor, from the control room annex to the turbine building, and from the control room annex to the tagging room.

Access to the control room annex is via two Class A fire rated doors which are; (1) from the turbine building walkway, and (2) from the operations personnel support room.

The doors; (1) from the turbine building walkway to the control room annex, (2) from the turbine building walkway to the control room, and (3) from the operations personnel support room to the control room annex are backed up by missile protection doors.

The door between the control room and the control room annex is a bullet-proof door locked closed with a card reader. Louver covers, which are mounted on the doors, can be manually slid down in place to prevent smoke from entering the control room through the door louvers.

Manual actions by plant personnel are relied upon to suppress a fire. The area is relatively uncongested, with adequate space for manual fire fighting. Portable dry-chemical and carbon dioxide extinguishers are located throughout the control room complex. A hose station is located in the turbine building just outside the entrance to the control room. Self-contained breathing units are located in the control room.

9.10.4.2 **Emergency Switchgear Rooms**

Separate areas located below the control room and the Technical Support Center are provided for each unit's emergency switchgear and control relays. Each area is composed of two emergency switchgear rooms, one for each division, and a single relay room. Each room has approximately 2500 ft^2 of floor space. The rooms within each area adjoin each other in an L-shaped configuration, with open passageways between them. There is also an open passageway with a 3-hour fire-rated sliding door between the Unit 1 and Unit 2 areas. The sliding fire door is normally open and will automatically close upon actuation of either the Unit 1 or Unit 2 Halon system or a smoke detector associated with the door.

The emergency switchgear and relay room contain safety-related switchgear and control relays, including redundant equipment required for safe shutdown, and the remote shutdown control panels for each unit. Large quantities of safety-related power and control cables are routed above the switchgear cubicles and relay boards throughout the area and in the open passageways between rooms. The emergency 125V dc batteries are also located in the area in separate rooms within their associated division switchgear rooms. Alternative safe shutdown capability in the event of a fire in this area is provided in accordance with 10 CFR 50 Appendix R. See Section 9.10.4.1 for discussion on the post-fire capability of manually closing the main steam line trip valves and/or the steam generator power operated relief valves. These features provide compliance to the requirements of 10 CFR 50 Appendix R.

The combustible materials in the area consist of a large amount of electrical cable insulation and parts of electrical components in the switchgear cubicles and relay boards. There is also a potential for a small amount of transient lubricating oil to be transported via the Unit 2 switchgear rooms to mechanical equipment room No. 3.

The emergency switchgear and relay room areas for each unit are bounded on all sides by concrete, which provides a 3-hour fire barrier. The individual rooms within each area are also separated by concrete or concrete block walls. As noted above, these walls are penetrated by open passageways. Where cable trays penetrate the walls separating individual rooms within each unit, intermediate fire stops are installed in the trays.

Manual actions by plant personnel are relied upon to suppress a fire. Access to the Unit 1 area is through the normally open fire-rated door from the Unit 2 area and through two fire-rated doors from the Unit 1 cable vault. The Unit 2 area is accessed through (1) a fire-rated set of double doors from the turbine building; (2) a 3-hour fire-rated door to a stairwell from the control room above; and (3) a fire-rated door from the Unit 2 cable vault.

Both the Unit 1 and Unit 2 area floor space is sufficiently clear to permit access by fire fighters, and smoke can be exhausted through the turbine building roof fans or into the cable vault and tunnel area to the motor control center rooms and outside.

Portable carbon dioxide extinguishers are located in both areas, and a 150-lb wheeled, carbon dioxide extinguisher is located in the Unit 2 area. Also, a 1.5-inch hose station is located in the turbine building just outside the entrance to the Unit 2 area.

The emergency switchgear and relay room area for each unit is protected by its own Halon fire suppression system. Each system is capable of flooding an emergency switchgear and relay room area with an adequate concentration of Halon for 10 minutes. The bottles supplying this system are located outside the emergency switchgear rooms in the turbine building.

9.10.4.3 **Containment Penetration Vaults, Cable Tunnels, and Service Building Cable Vaults**

Each unit's containment penetration vaults (outside containment), cable tunnels, and service building cable vaults are adjoining spaces used as cable spreading and routing areas. The penetration vaults and service building cable vaults are connected by the cable tunnels. These three spaces constitute a single fire area. Separate areas are provided for each unit on either side of the auxiliary building between the service building and the unit containment building. Alternative safe shutdown capability in the event of a fire in this area is provided in accordance with 10 CFR 50 Appendix R. Modifications made as a result of 10 CFR 50 Appendix R requirements provide the operator with the capability of manually closing the steam generator power operated relief valves from either the control room or the units' cable vault and tunnel area. See Section 10.3.1.2 for additional discussion of this modification.

All of the spaces within these cable spreading and routing areas contain a large number of safety-related cables, including control and power cables for equipment required for safe shutdown. The outside containment penetration vaults also contain the redundant hydrogen recombiner power supplies and emergency motor control centers.

The only combustible material in significant quantity is the insulation for the large number of electrical cables in the areas.

The separate cable spreading and routing area provided for each unit is bounded on all sides by concrete or concrete blocks, which provide a fire barrier surrounding the three adjoining spaces within a unit. Each area is provided with a total flooding automatic carbon dioxide suppression system and a separate fire detection system that alarms in the control room. The automatic carbon dioxide system is backed up by manual suppression capability using manually actuated water sprinkler system in the Service Building Cable Vault, portable extinguishers located in the area, and water hoses from cable vault standpipe, yard hydrants and the hose stations in the turbine building. The areas can be accessed at one end from the outside yard via the motor control center rooms and a spiral staircase down to the outside containment penetration vaults, and at the other end from the turbine building via one of the emergency switchgear rooms. Smoke and heat can be

exhausted up the spiral staircases and through the doors of the motor control center rooms to the outside. Adequate floor space is available to permit access by fire fighters to all locations within the areas.

9.10.4.4 **Battery Rooms**

There are four 125V dc station battery rooms. A separate battery is provided for each division of each unit's safety-related equipment. Each battery is housed in a separate battery room approximately 9 feet by 14 feet, located within or adjacent to the associated division's emergency switchgear room.

The combustible material in the rooms consists of the plastic battery cases and the battery power cable insulation.

An unmitigated fire in a battery room could disable one of the station batteries. Such a fire would not prevent safe shutdown, however, since redundant equipment controlled from the other train's battery would still be available, and since the dc load on the other train's battery would still be fed from the battery chargers.

Each battery room is bounded on all sides by concrete or concrete block, which provides an adequate fire barrier. Ventilation ducts that penetrate the barrier are provided with fire dampers and the doors to the rooms are 3-hour fire-rated. Manual actions by plant personnel are relied upon to suppress a fire. The battery rooms themselves and the areas used for access to the battery rooms are relatively uncongested, with adequate space for manual fire fighting. Portable Class C extinguishers are located nearby in the emergency switchgear rooms, and a wheeled Class C extinguisher is located in the Unit 2 division J emergency switchgear room. Also, 1.5-inch hose stations are located in the turbine building within reach of all the battery rooms.

During normal system operation the fire potential in a battery enclosure is virtually negligible because battery hydrogen generation is negligible. Even though battery hydrogen generation is negligible, air flow detectors have been installed in the battery room ventilation exhaust ducts with annunciation in the control room if there is no air flow. If the smallest battery room was sealed at equalize charge at an elevated temperature of 87°F, the lead calcium batteries would require greater than 40 hours to attain the burnable threshold concentration of four percent hydrogen. In the event of the worst case two-hour design basis battery discharge at an elevated temperature of 110°F, it would require more than two hours following charger power restoration for the hydrogen concentration to reach four percent. In addition, special features in the battery room supply air provide for ventilation under conditions where the normal battery room exhaust flow path is sealed. The special features provide a means for manual operator action that will occur within one hour of the beginning of the battery charging process to supplement ventilation to the applicable battery rooms under these conditions as necessary.

9.10.4.5 **Cable Tray Rooms**

The two cable tray rooms are large, open spaces directly above the control room. Each room is used as a cable-spreading area primarily for non-safety-related cables of its respective unit. There are, however, a small number of non-safety-related cables that are important to plant operation, and a concrete cubicle containing the reactor protection system trip breakers and switchgear, located in each of the rooms. The non-safety-related cables are those associated with the interlocks between the reactor coolant pumps and the rod control system, and the interlocks between the main feedwater pumps and the motor-driven auxiliary feedwater pumps. The feed pump interlocks are part of a system that may be used for safe shutdown, since they function to provide the automatic start capability by the motor-driven auxiliary feedwater pumps. These pumps, however, may be started manually at the control board.

Two remote monitoring panels (RMP) are installed in the cable tray area of Unit 1. The RMP designated ASC RMP-1 monitors steam generator and pressurizer wide-range levels, reactor coolant system (RCS) wide-range pressures and RCS loop hot-leg temperatures. The RMP designated PNL-REM, monitors steam generator pressures, RCS cold-leg temperatures and source and wide-range neutron flux. Both units share each RMP; and the instrumentation from each unit is powered by the emergency power system of the opposite unit. This design feature is intended to assure that indications of these parameters from both units will be available even if a fire disables the emergency power system of either unit. See Section 7.7.2 for further information on the remote monitoring panels. These features and capabilities are part of the requirements of 10 CFR 50 Appendix R.

The combustible material in the rooms consists of a moderate amount of cable insulation.

An unmitigated fire in one of the cable tray rooms could damage the automatic start function of the motor-driven auxiliary feedwater pumps of one unit. However, the function could be performed manually at the control board in the control room. In addition, the turbine-driven auxiliary feedwater pump and the auxiliary feedwater pumps of the other unit would be available.

A fire in one of the concrete cubicles containing the reactor system trip breakers would not prevent a reactor scram because redundant components and circuits are located in separate enclosed panels and raceways. Due to the fail-safe nature of the reactor protection system design, a fire would not prevent a reactor scram.

Each cable tray room is bounded on all sides by concrete or concrete block, which provides an adequate fire barrier. The doors in this area are 3-hour-rated. All cable penetrations are sealed. Ventilation ducts that pass between the rooms and other plant areas are provided with fire dampers.

A smoke detection system is installed in each room along with an automatic heat-actuated total flooding CO_2 system. Portable extinguishers and manual hose stations are located in the

turbine building to provide manual backup to the automatic suppression system. The rooms are relatively uncongested with adequate space for manual fire fighting.

The walls, ceiling and floor of the reactor trip switchgear cubicles are of concrete construction. The entrance to each cubicle is of a labyrinth design.

9.10.4.6 Switchgear Rooms

The switchgear rooms are large, open spaces located adjacent to the turbine building at the 58-feet elevation directly above the cable tray rooms. These rooms contain 480V and 4160V switchgear and other miscellaneous electrical equipment and associated cables. None of this equipment is considered safety-related.

The only combustible material in significant quantity in the switchgear rooms is the insulation on the moderate number of electrical cables present.

Due to the fire barriers separating the rooms and the absence of safety-related equipment, no adverse effects on plant safety are likely, even from an unmitigated fire.

The floors and walls of the switchgear rooms are constructed of concrete or concrete block, which provides an adequate fire barrier. The ceilings are also the roof of the building, an insulated metal deck. All penetrations in the floor to the cable tray rooms below are sealed.

9.10.4.7 Motor Control Center Rooms

The motor control center rooms for each unit are located above their respective outside containment penetration vaults. Each room contains 480V motor control centers, and the ventilation units for the cable vault and the motor control centers. None of this equipment is considered safety-related.

The combustible material consists of a small amount of cable insulation.

The only safety-related equipment in the motor control center rooms is the pressurizer heater panels. An unsuppressed fire in the rooms due to the combustion of the small quantity of cable insulation would not affect plant safety. Such a fire could disable the pressurizer heaters; however, the heaters are not credited for safe shutdown.

The floors, ceilings, and walls of the motor control center rooms are constructed of concrete or concrete block. The rooms each contain two non-fire-rated doors, one of which leads to the yard, and an open stairwell leading to the outside containment penetration vault located below.

A smoke detection system is installed in each room that alarms in the control room. Nozzles for a total-flooding CO_2 system are installed in each room. Heat detectors, located in the cable vault below the MCC room, actuate the automatic release of CO_2 into both rooms. Ventilation ducts leading to each room do not have fire dampers installed. However, the ventilation fan is shutdown in the event of actuation of the gas suppression system. Manual hose stations are

located in the yard area and portable extinguishers are located near one entrance to each room. The room is relatively uncongested, with adequate space for manual fire fighting.

9.10.4.8 **Auxiliary Building - Elevation 2 Ft.**

This elevation of the auxiliary building is composed of large, open floor areas and separate equipment cubicles. There are separate concrete compartments for the safety-related seal-water heat exchanger, nonregenerative heat exchanger, and the demineralizers, and for the non-safety-related boron recovery system equipment and liquid waste system equipment. The six charging pumps (three per unit) are located in separate cubicles with concrete walls in the center of the floor area. The charging pump cubicles are completely enclosed on this elevation; access to the pump cubicles is on Elevation 13 ft. One charging pump is required for safe shutdown of both units.

As part of the reanalysis for fire protection to meet the requirements of 10 CFR 50 Appendix R, the existing ventilation and potential temperatures in the auxiliary building were reviewed. There are two sets of fans that may be used for ventilation of the charging pump cubicles. These fans are located on Elevation 45 ft. 10 in. of the auxiliary building. One set of fans is supplied from a Unit 1 and Unit 2 emergency power source.

A modification was made to reroute the cable from the Unit 2 power source for one fan such that it is adequately separated from the Unit 1 cable for another fan (see Exemption Request #18, 10 CFR 50 Appendix R Report). Additionally, means are provided for starting the Unit 2 fan at the local starter in the auxiliary building. A redundant fuse for fan 1-VS-F-58B has been installed in the control power circuit such that when the isolation transfer switch is activated, control power is available after the transfer regardless of the status of the primary control power fuses.

Safety-related equipment in the open floor areas includes the four component cooling water pumps, and pipes and valves for the chemical and volume control system. The component cooling water pumps are cross connected to serve either unit; one pump per unit is required for safe cold shutdown capability. The equipment cooled by the component cooling water system includes reactor coolant pump thermal barriers, residual heat removal pump seal coolers, reactor containment recirculation air coolers, spent-fuel pit coolers, and the excess letdown, nonregenerative, seal-water and residual heat removal heat exchangers.

The CCW pumps and the reactor containment piping penetration areas are ventilated by two fans which have their cables routed together through common fire areas. In this case the requirements of 10 CFR 50 Appendix R can be satisfied by the installation of temporary fans and ducting, since adequate time exists (i.e., several hours). No permanent modifications therefore are required to assure ventilation for these areas in the event of a postulated fire which disables normal ventilation. Appropriate procedures are in place to support this provision.

Cables for redundant divisions of safety-related and safe-shutdown equipment are routed through many areas of this elevation. Alternative safe shutdown capability in the event of a fire in this area is provided in accordance with 10 CFR 50 Appendix R.

The major combustible material on this elevation is cable insulation. Trash containers are used on this elevation. There is a lube-oil system associated with each charging pump, and minor amounts of lubricants in the other pumps.

A fire on this elevation could not damage redundant charging pumps because of the barriers between the individual pumps and between the pumps and other areas on this elevation. (See Exemption Request #1, 10 CFR 50 Appendix R Report.)

The component cooling water (CCW) pumps are mounted on pedestals and are separated by 15 feet. It is not expected that a postulated fire could damage more than one of these pumps because of the separation between pumps and the open hatch above the pumps, which would prevent local heat buildup. Nevertheless, a repair procedure has been developed in accordance with 10 CFR 50 Appendix R for repair of a CCW pump motor and cable.

Fire hose stations are provided on this elevation for manual fire fighting. Floor drains are available for removal of fire suppression water. Water spray shields have been provided on the CCW pump motors to minimize the possibility of water-induced damage.

9.10.4.9 **Auxiliary Building - Elevation 13 Ft.**

The six charging pumps are located on the 2-foot elevation in separate concrete cubicles accessible from the 13-foot elevation. The front walls of the cubicles are open on this elevation; the back walls of the three pumps for one unit face the back walls of three pumps for the other unit.

Three boric acid tanks and four boric acid transfer pumps are located in the open floor area. These tanks and pumps provide a source of boric acid for safe shutdown of both units. An alternative source of borated water is the refueling water storage tank, which is located outside the building.

Cables for redundant divisions of safety-related and safe-shutdown systems are located on this elevation. Alternative safe shutdown capability in the event of a fire in this area is provided in accordance with 10 CFR 50 Appendix R. The separation provided between safe shutdown components in this area is described in 10 CFR 50 Appendix R Report, Chapter 7, Exemption Requests. A repair procedure and replacement cable is available for replacing the component cooling water pump power cables in this area in the event of fire-induced damage.

The major combustible material on this elevation is cable insulation. A hydrogen line is routed in the overhead of this elevation to the volume control tanks on Elevation 27 ft. 6 in.

Although the front walls of the charging pump cubicles are open, it is not expected that a fire in one cubicle would affect adjacent charging pumps because of the floor-to-ceiling concrete barriers between pumps on this elevation. Also, because of the grating floor at Elevation 13 ft., charging pump lube-oil leakage would collect at Elevation 2 ft., where the cubicles are completely enclosed.

The four boric acid transfer pumps are 8 feet apart, and redundant pumps could be damaged by a transient combustible liquid spill; only minor amounts of lubricants are associated with the pumps themselves. Loss of redundant pumps would not prevent safe shutdown because of the alternate boration capability provided by direct supply of borated water from the refueling water storage tanks.

Fire hose stations are provided on this elevation for manual fire fighting. Floor drains are available for removal of fire suppression water. Portable fire extinguishers are provided on this elevation.

9.10.4.10 **Auxiliary Building - Elevation 27 Ft. 6 In.**

The safety-related equipment on this elevation includes the component cooling water surge tank, volume control tanks, and boric acid storage tanks. This equipment is not required for safe shutdown. The component cooling water surge tank and the volume control tanks are in separate concrete cubicles; the other safety-related equipment is located in the open floor area.

The nonsafety-related gaseous waste disposal equipment, solid waste disposal equipment, and some sampling system equipment are also located in separate cubicles on this elevation.

Cables for safety-related equipment are routed through many of the open floor areas on this elevation in conduit and in cable trays with corrugated metal top covers.

Combustible cable insulation and protective clothing in open drums are located in the open floor areas. A charcoal filter is located in the gaseous waste disposal room. A hydrogen pipeline enters the auxiliary building at the 2-foot level in vicinity of the SI lines supplying the high head SI pumps from which it is routed to the volume control tank area.

Fire hose stations and portable extinguishers are provided on this elevation for manual fire fighting. In addition, this elevation is accessible to yard hose facilities via two exterior doors in the general area and an exterior door from the drumming room. Floor drains are provided for removal of fire suppression water. The gaseous waste system charcoal filter can be air cooled if a temperature rise due to decay heat is detected by operators, or by heat detectors.

9.10.4.11 **Auxiliary Building - Elevation 45 Ft. 10 In.**

Components of the safety-related auxiliary building ventilation system (see Section 9.10.4.8), including redundant charcoal filter trains, are located on this elevation. Fuel building, decontamination building, and safeguards area ventilation equipment is also located on

this elevation, along with the containment purge supply and exhaust fans. Safety-related cables in conduit and cable trays are routed through the area.

The combustible materials on this elevation include cable insulation, protective clothing in drums, and three charcoal filter units. Each of the two safety-related trains of the auxiliary building ventilation system filters contains about 2640 lb of charcoal.

Each of the safety-related charcoal filter units is in a separate metal enclosure and completely enclosed in separate concrete cubicles with metal closures for the ceilings and doorways. An unsuppressed fire in one filter would not propagate to the redundant unit, nor would it damage other safety-related equipment or cables. The inlet and outlet dampers can be shut to prevent radiation release, and the redundant unit can continue to operate. The non safety-related charcoal filter unit in the auxiliary building ventilation system is housed in a separate enclosure, independent of the other filter units and independent of safety-related equipment.

Fire hose stations and portable extinguishers are provided on this elevation for manual fire fighting. Floor drains are available for removal of fire suppression water.

The auxiliary building ventilation system safety-related charcoal filters are protected by separate total-flooding carbon dioxide suppression systems. These suppression systems are manually actuated, and are provided with heat detectors that will alarm in the control room at a filter temperature of 225°F. The non-safety-related charcoal filter unit is protected by an automatic water deluge system.

9.10.4.12 **Reactor Containment Buildings**

The reactor containment buildings for each unit are essentially identical structures. The containment building is divided by the polar crane wall into an outer annulus section and a central section. The central section is further subdivided into equipment cubicles that are connected to each other and to the outer annulus by open archways, grating floors, and unsealed penetrations. The entire containment can be considered a single fire area.

Safety-related equipment located inside containment includes the regenerative and excess letdown heat exchangers, steam generators, redundant residual heat removal pumps and heat exchangers, containment recirculation spray pumps and heat exchangers, safety injection accumulators, pressurizer, reactor vessel, and rod drive mechanism. Non-safety-related iodine charcoal filters and filtration fans are also located inside containment.

Power, control, and instrument cables for safety-related and non-safety-related equipment are located in the central compartments and are routed around the perimeter of the containment in the outer annulus. In some areas of the annulus, there are cables in open ladder trays with approximately 10 inches of separation between the trays in a stack. The trays are fitted with sheet metal covers that are raised approximately 1 inch above the top of the tray. Various safe-shutdown functions are served by the cables in containment. Radiant energy shields have been installed between primary and alternate safe shutdown instrumentation, and firestops have been installed in

cable trays which are intervening combustibles between primary and alternate safe shutdown components. See NRC's Safety Evaluation dated 2/25/88 regarding exemption requested. A radiant energy shield is installed between the residual heat removal pump motors to satisfy 10 CFR 50, Appendix R requirements.

There are 200 gallons of lube-oil associated with each of the three reactor coolant pump motors. There are 175 gallons in the upper bearing reservoir and 25 gallons in the lower bearing reservoir. Combustible cable insulation is located in the containment annulus and in most of the central compartments. The fire loading due to cable insulation is particularly high in containment annulus penetration area. Each of the two iodine charcoal filter units contains about 170 lb of charcoal.

The combustible materials in containment, with the exception of the reactor coolant pump lube-oil, do not constitute a severe enough fire hazard to damage safety-related fluid system components such as heat exchangers, safety injection accumulators, the reactor vessel, and the pressurizer.

The iodine charcoal filters are enclosed in separate structures with 18-inch-thick concrete walls and roofs. An unmitigated filter fire would have no direct effect on safety-related equipment or cables.

Temperature sensors are provided on each reactor coolant pump to detect pump overheating. Portable fire extinguishers are provided outside the personnel hatch of the containment for manual fire fighting. A dry-type fire hose standpipe system has been installed in the containments for manual fire suppression capability. Heat and smoke detectors have been installed in the annulus cable penetration area for detection of a fire within the penetration area.

A reactor coolant pump motor oil collection system has been installed to ensure that oil leakage will not contact hot equipment and to reduce the possibility of a fire. Oil leakage from the reactor coolant pump motor lube-oil system is diverted by enclosures and open dams to a drain tank. This drain tank is sized to contain the total oil inventory of the motor.

The enclosures surround the following oil-bearing components that may leak and are fitted with covers to contain oil from leaks in pressurized lines and to keep foreign matter out of the drain. The oil-bearing components that require oil collection enclosures are:

1. Oil lift pumps (pressurized lines)
2. Oil cooler (pressurized lines and housing)
3. Oil level indicators
4. Oil fill and drain points
5. Flanged connections for the lower oil reservoir

6. Sight glasses
7. All flanged oil-bearing connections

In addition, open dams will drain any potential leakage from the gasketed joint between the upper oil pot housing and the support plate for the upper bearing.

The collection system is designed to withstand an SSE (Safe Shutdown Earthquake) and to collect lube oil from all potential pressurized and unpressurized leakage sites in the reactor coolant pump lube oil systems. Leakage is collected and drained to a vented closed container that can hold the entire lube oil system inventory for one RCP. A flame arrester is installed to minimize the hazard of fire flashback. The drain line is large enough to accommodate the largest potential oil leak.

9.10.4.13 **Containment Spray Pump and Auxiliary Feedwater Pump Buildings**

The containment spray pump and auxiliary feedwater pump buildings for each unit are essentially identical structures, each located adjacent to its unit's reactor containment building. The two containment spray pumps are located at ground level in one compartment. The two electric-motor-driven auxiliary feedwater pumps and the steam-turbine-driven auxiliary feedwater pump are located in an adjacent compartment. A grating is located above the auxiliary feedwater pumps. This floor grating provides access to the steam generator power operated relief valves, the main steam nonreturn valves, the main steam safety valves, and the main steam trip valves. A basement area under the pump compartments contains auxiliary feedwater booster pumps, service water pipes, and safety-related and non-safety-related cables. The cables are for the equipment in the building plus cables for the low-head safety injection pumps and recirculation spray pumps, and associated valves, located in the adjacent safeguards equipment building. The auxiliary feedwater pumps are required for safe shutdown in the event of a fire. The other equipment and cables are required to mitigate the consequences of a LOCA.

Small amounts of grease and oil are associated with each of the pumps. Some combustible cable insulation is located in the pump and valve areas. The basement contains a considerable quantity of cable insulation.

Alternative safe shutdown capability in the event of a fire in this area is provided in accordance with 10 CFR 50 Appendix R.

Loss of the steam generator power operated relief valves would not prevent safe shutdown, because the main steam safety valves would relieve steam pressure.

Loss of the auxiliary feedwater pumps for one unit would not prevent shutdown of that unit, because the auxiliary feedwater discharge lines for the two units are cross connected, and feedwater could be provided from the undamaged unit. The cross-connect valves are not located in the affected auxiliary feed water pump area and would not be incapacitated by a fire in that area.

Damage to redundant systems with components and cables in this building would not prevent safe shutdown, since a LOCA is not postulated simultaneously with a fire.

Portable extinguishers are provided for manual fire fighting. The fire hose at a yard hose cabinet could be used to fight a fire in parts of this building.

9.10.4.14 **Fuel Building**

The fuel building is bounded by the auxiliary building, decontamination building, and the two reactor containment buildings. The top surfaces of the spent-fuel pool and the new-fuel storage pit are located at Elevation 47 ft. 4 in. The spent-fuel pool cooling pumps and purification pumps are located below the new-fuel storage pit at Elevation 6 ft. 10 in. The motor control centers for the pumps are located on a stairway landing at Elevation 16 ft. 10 in. None of the equipment in the building is required for safe shutdown.

The combustible materials in the fuel building consist of small amounts of cables.

Because of the separation between combustibles and equipment, and the low fire loading, a fire in most areas of the building would cause minor damage. An unmitigated fire in the pump area could damage redundant spent-fuel pool cooling pumps. A cable fire could incapacitate redundant pumps. In the event of the loss of both pumps, the spent fuel could be cooled by makeup water supplied from the primary-grade water system or firewater system.

Fire hose stations and portable fire extinguishing equipment are provided inside the fuel building. For flood protection, a normally closed trip valve placed outside the building isolates the water to the building during normal operation. Existing hose racks are equipped with a remote control station to provide pressurization of the fire lines when demanded. Access for manual fire fighting is from the auxiliary building, decontamination building, and the yard area.

9.10.4.15 **Safeguards Equipment Buildings**

The safeguards equipment buildings for each unit are essentially identical structures, each located adjacent to its unit's reactor containment building.

Access to the building is from the yard at Elevation 28 ft. 6 in. Ladders lead from this elevation down to the redundant containment recirculation spray pumps and the redundant low-head safety injection pumps. Each of these pumps is located in a separate pit. Valve operators and the cables for these pumps are located in a separate compartment on Elevation 19 ft. 6 in., accessible by ladder from Elevation 28 ft. 6 in. None of the equipment or cables in this building is required to achieve safe shutdown.

The combustible materials in this building are the cables in the valve operator area and grease in the pumps and valves.

The pumps are in separate cubicles with walls of 12-inch reinforced concrete; a fire in one pump cubicle would not affect other pumps. For a fire in this area, cables for both divisions could

be lost. Safe shutdown would be accomplished using alternate equipment from the "opposite unit." Appendix R Safe Shutdown Analysis takes no credit for survival of the normal system equipment and cables in this area.

Portable fire extinguishing equipment is provided at Elevation 28 ft. 6 in. Fire hose would be available from the yard hose houses.

9.10.4.16 **Intake Structure**

The intake structure is located approximately 1.25 miles from the main plant buildings. Two separate compartments are located on top of the intake structure. One compartment contains non-safety-related cables, 4-kV switchgear, and motor control centers. The other compartment contains the three safety-related emergency service water pumps, and a fuel-oil tank cubicle. The fuel-oil tank supplies the diesel engines that drive the emergency service water pumps. The emergency service water pumps provide cooling water for plant shutdown in the event of a loss of offsite power. The three pumps are shared by both units.

The combustible material in the non-safety-related electrical equipment compartment is primarily cable insulation. There are 15 gallons of lube-oil associated with each emergency service water pump. The fuel-oil cubicle in the pump compartment contains a 4800-gallon fuel-oil tank.

A fire resulting in damage to all the cables in the electrical equipment compartment would have no effect on the ability to achieve safe shutdown in accordance with 10 CFR 50 Appendix R, since equipment and cables necessary to perform the shutdown function would be available outside of the fire area. An unmitigated fire in the electrical equipment compartment would not spread to the emergency service water pump compartment.

The walls between the fuel-oil day tank and the emergency service water pumps are 3-hour barriers.

Smoke detectors that alarm in the control room are provided in the electrical equipment compartment and in the emergency service water pump compartment. The fuel-oil tank cubicle is protected by a total-flooding carbon dioxide suppression system supplied by a bank of carbon dioxide cylinders in the pump room. The carbon dioxide system is automatically actuated by heat detectors or can be manually actuated. Actuation of the carbon dioxide system sounds a pre-discharge alarm and pneumatically closes vent dampers and releases doors when discharge occurs. Discharge is alarmed in the control room. After initial discharge, additional carbon dioxide may be released by manual operation of the system.

Portable and wheeled fire extinguishers are provided at the intake structure. The fire truck has a built in tank and also can draft water from nearby to supply fire suppression water. The fire truck and fire hose would be brought to the intake structure in response to a detector alarm or in response to a call from a plant operator, who inspects the area once per shift.

9.10.4.17 **Mechanical Equipment Room No. 3**

Mechanical equipment room No. 3 is located adjacent to the Unit 2 relay room and the train "2H" emergency switchgear room. Three safety-related air-conditioning chillers, chiller circulating pumps, and air bottles are located in this room. If all three air conditioning chillers are simultaneously disabled in mechanical equipment room No. 3, there are two chillers in mechanical room No. 5 that are available to maintain cooling in the main control room and emergency switchgear and relay rooms.

Mechanical equipment room No. 3 also contains two charging pump service water pumps. One pump is required to support operation of two charging pumps to achieve and maintain safe hot shutdown and safe cold shutdown for both units. In the event of a fire in this area, service water to the charging pumps would be provided by one of the charging pump service water (CPSW) pumps located in Mechanical Equipment Room No. 4 in the turbine building basement, which is independent of this area. Cables for the equipment are located in conduits and cable trays in this room.

One wall of this room is shared with the turbine building and with the charging pump service water pump room; however, a fire in the turbine building cannot affect safe shutdown equipment in mechanical equipment room No. 3 because 3-hour-rated fire barriers are used to separate MER-3 from the turbine building.

Combustible material in the room includes the approximately 10 gallons of lube-oil associated with each of the three chiller units and a moderate amount of combustible cable insulation.

Portable fire extinguishers are provided in the room and nearby for manual fire suppression. A fire hose station is located nearby in the turbine building, but the hose may not reach the mechanical equipment room. A floor drain is provided in the room for removal of fire suppression water. The door to the emergency switchgear room is curbed to prevent the spread of a lube-oil fire to the switchgear room.

9.10.4.18 **Mechanical Equipment Room No. 4**

Mechanical equipment room No. 4 is located at the 9 ft.-6 in. elevation of the Unit 2 turbine building. MER-4 houses two charging service water pumps 1-SW-P-10A and 2-SW-P-10A. One pump 1-SW-P-10A is required to support operation of two charging pumps to achieve and maintain safe hot shutdown and safe cold shutdown for both units. Smoke detectors are installed within MER-4 in accordance with National Fire Protection Association (NFPA) Standard 72.

The north wall, shared with MER-3, has a 3-hour fire rating. The remaining walls, which are 3-hour fire rated, separate MER-4 from the turbine building.

The amount of combustible material in the room is low and consists of fiberglass piping and grease. A fire hose station is provided outside the room and in the nearby area for manual fire suppression.

9.10.4.19 **Turbine Building**

The turbine building is a steel-framed structure with the lower portions of the exterior walls constructed of masonry and the upper portions of uninsulated metal siding. The roof is metal decking covered with insulation and membrane roofing. The building is divided into two identical sections, except for the operating floor, each measuring approximately 330 feet long by 150 feet wide, housing the turbines and generators for Units 1 and 2. Each section has three levels, situated at Elevations 9 ft. 6 in., 29 ft. 6 in., and 58 ft. 6 in. The operating floor is reinforced concrete, supported on steel framing. The mezzanine level and platforms are steel-framed, with metal floor grating. Stairways between floors are constructed of metal grating.

The turbine building is bounded on the west side by the office building and on the south side by exposed exterior walls. The north side shares a common wall with a portion of the service building that contains the safety-related diesel-generator rooms, emergency switchgear rooms, control room, and battery room 2B. Other non-safety-related areas of the service building opening off the turbine building include the shop area, labs, locker, and wash rooms. The turbine building is bounded on the east side by the condensate polishing building.

Safety-related equipment located within the turbine building includes control room and switchgear area emergency ventilating units, component cooling water heat exchangers, service water valves, circulating water valves, and charging pump service water subsystem valves. Most of this equipment is located at Elevation 9 ft. 6 in. Circulating water valves isolate the main condensers from the intake canal to conserve water in the canal for shutdown. Components required for safe shutdown are separated in accordance with the requirements of 10 CFR 50 Appendix R.

Cable trays are located at all elevations of the turbine building, although most are located at Elevations 29 ft. 6 in. and 9 ft. 6 in.

Normal combustibles in the turbine building include the lubricating oil and hydrogen gas contained within the turbine generator. Combustibles at the 29 feet 6 inches elevation include the 21,000-gallon turbine oil reservoir and coolers, heavy concentrations of cabling, hydrogen piping, and several 55-gallon drums of flammable materials, including used oil and grease. The combustibles at Elevation 9 ft. 6 in. include two 22,000-gallon turbine lube-oil storage tanks enclosed within a separate room. Other combustibles at this elevation include the turbine oil conditioner unit, containing about 1100 gallons of oil, the hydrogen seal oil unit, containing about 70 gallons of oil, redundant trains of safety-related cabling, and various transient combustible materials including lubricants, welding gas, lumber, and polyethylene plastic film used to isolate and protect equipment during maintenance procedures.

The operating floor of the turbine building is an open area containing both the Unit 1 and 2 steam turbines and generators. A 12-inch block wall is provided to separate Units 1 and 2 below the operating floor. The turbine building is separated from the safety-related portions of the service building by reinforced-concrete walls. Other areas of the service building are separated from the turbine building by 12-inch-thick masonry walls.

The 21,000-gallon turbine oil reservoirs and coolers at Elevation 29 ft. 6 in. are provided with 3.5-foot-high concrete curbs, which are capable of containing the entire contents of the reservoirs. The turbine lube-oil tanks, containing 44,000 gallons, are located at Elevation 9 ft. 6 in. within the turbine lube-oil rooms, and are arranged with diking adequate to contain the entire contents of the tanks. The room is penetrated by a 3-hour sliding steel fire door on the north wall and an unrated door in the east wall. The hydrogen seal-oil units are located at Elevation 9 ft. 6 in. and contain approximately 70 gallons of oil. These units are not provided with curbing, although a drainage trench surrounds the units. The turbine lube-oil conditioners, which contain 1100 gallons of oil, are located at Elevation 9 ft. 6 in. The units are provided with dikes adequate to contain the entire amount of oil contained within the equipment.

The hydrogen seal-oil units, the turbine oil reservoir and coolers, and the turbine lube oil conditioners are protected by deluge systems actuated manually at the control room or locally. These areas are also provided with thermal fire detectors with annunciation in the control room. The turbine lube-oil rooms are protected by an automatic sprinkler system with alarm indication in the control room.

The turbine generators contain lube oil and hydrogen at the bearing enclosures. These areas are provided with fixed, low-pressure carbon dioxide suppression systems automatically initiated by temperature detectors when the enclosure temperatures exceed 450°F. The systems may also be manually initiated locally.

Sprinkler protection is provided at all levels of the turbine building except for the operating deck.

Backup fire-fighting capability is provided by manual hose stations located in various areas of the building and from the hydrant/hose houses in the yard, as well as portable extinguishers.

9.10.4.20 **Diesel-Generator Rooms**

There are three adjacent identical diesel-generator rooms, each measuring approximately 28 feet wide by 58 feet long by 16 feet high. The rooms are located in the service building in a one-story, reinforced-concrete structure.

Each room contains a diesel-driven generator, day tank, starting air compressor, air storage tank, batteries, and a control panel.

The combustibles in each room consist of approximately 1100 gallons of diesel fuel oil and about 500 gallons of lubricating oil. Other minor quantities of combustible materials consist of the

battery cases and cabling. The day tanks are supplied from the yard by transfer pumps started by level switches in the day tanks.

An unmitigated fire in one of the emergency diesel-generator rooms would result in the loss of function of one emergency diesel generator.

The diesel-generator rooms are enclosed with 2-foot-thick reinforced-concrete walls and ceilings with an equivalent fire rating in excess of 3 hours. The 3-hour walls separating the diesel-generator rooms are not penetrated by doors or ducts. The rooms are accessed through fire rated doors from the turbine building.

A fixed, manually actuated, total-flooding carbon dioxide suppression system is provided in the emergency diesel-generator rooms. Two thermostats located near the ceiling initiate an alarm in the control room when the temperature exceeds 190°F. The carbon dioxide suppression system can be actuated from a push-button station in the control room or from manual break-glass stations at the entrances to each room. Initiation of the carbon dioxide suppression system is arranged to automatically close doors to the area and trip the room exhaust fan, but does not shut the overhead air intake louvers. Prior to manually actuating the suppression system, the ventilation system must be manually shut down.

Backup fire-fighting capability is provided by a dry-chemical and a carbon dioxide portable extinguisher in each diesel-generator room. Manual hose stations serving this area are provided in the turbine building.

Venting of smoke from these rooms, as well as disposal of large quantities of fire-fighting water, can be made through the exterior doors.

Because the three redundant diesel-generator rooms are completely separated from each other, with no open penetrations through the walls separating the units, the potential for an unmitigated fire in one unit spreading to the other units is small.

9.10.4.21 **Compressed-Gas Storage Areas**

There is no safety-related equipment in these areas.

Compressed gases stored in the yard area include hydrogen in cylinders stored under a protective roof, with concrete walls on three sides and the fourth side open. Main generator hydrogen storage is in tanks set on a concrete pad. Welding gas, including oxygen and acetylene cylinders, is also stored on a concrete pad. Compressed-gas cylinders are also stored in the yard adjacent to the auxiliary building.

A fire in any of these areas would result in the loss of all the stored compressed gas in that area but would not affect safety-related areas.

Fire protection provisions for the combustible gas main storage area include adequate separation distance from safety-related equipment, and manual fire fighting utilizing the hydrants and equipment in the hose houses.

The separation distances and manual suppression capability are adequate to prevent a fire in compressed-gas storage areas from affecting safety-related equipment.

9.10.4.22 **Transformer Area**

There is no safety-related equipment in this area.

There is a large amount of oil in the transformer units, which include the main and station service transformers for Units 1 and 2.

A fire in one of the transformers would cause the loss of function of at least one transformer, but would not have any effect on the ability to safely shut down the plant.

Each of the transformers is protected by an automatic water spray suppression system actuated by heat detectors. Hose lines from nearby hose houses are available for manual suppression.

The transformers are separated from each other by 12-inch-thick concrete fire walls 19 feet tall. The transformers are located 35 feet away from the turbine building. The units sit on a bed of crushed stone with a 6-inch-high dike surrounding each transformer. The crushed stone pits are sized to the full volume of oil released from a transformer, preventing the oil from spreading.

The fire detection and suppression equipment are adequate to control a fire in the transformer area.

9.10.4.23 **Fuel-Oil Pump Houses and Storage Tanks**

The fuel-oil pump houses and tanks are located at the northeast corner of the yard. The system consists of one 210,000-gallons aboveground storage tank, two 20,000-gallon underground tanks, and two identical pump houses. The pump houses are located below grade and are separated from each other by an 8-inch-thick concrete wall. The interiors of the pump houses are reached from grade via steel ladders in a hatchway. Each pump house measures approximately 17 feet by 17 feet in area, with a 16-foot-high ceiling. Each pump house contains three fuel-oil transfer pumps and a 275-gallon drain tank. Each pump house contains one of the redundant safety-related pumps that supplies the diesel-generator day tanks.

The combustibles in each of the pump houses consist of approximately 300 gallons of fuel-oil contained in the drain tank, pumps, and piping. The maximum combustible loading of the aboveground fuel-oil storage tank is 210,000 gallons.

An unmitigated fire in one of the fuel-oil pump houses could damage or destroy all the equipment within the enclosure. A fire in one of these pump houses, however, would not affect the adjacent pump house containing redundant equipment. A leak in the aboveground oil storage tank

would be contained within the diked area and would not affect other areas of the plant. The two underground 20,000-gallon fuel-oil tanks are not subject to a fire.

The two fuel-oil pump houses are located below grade adjacent to each other, and are separated by a 12-inch-thick reinforced-concrete wall with 3-hour equivalent fire rating. Ventilation to these areas is provided by fans and concrete ducts.

Fire suppression for the fuel-oil pump houses is provided by a fixed high-pressure carbon dioxide extinguishing system. The carbon dioxide system is automatically actuated by heat detectors or can be manually actuated. Initiation of the system shuts off the ventilation fans and sounds a predischarge alarm. Following a 30-second delay, carbon dioxide is discharged into the room and the discharge is alarmed and annunciated in the control room. After the initial discharge, additional release of carbon dioxide must be manually actuated. The system has a lockout valve for personnel safety which alarms in the control room when the system is locked out. Backup manual fire suppression is provided by a nearby hydrant and hose house with provisions for foam application.

The 210,000-gallon aboveground steel fuel-oil storage tank is encircled with an 8.5-foot-high impoundment wall constructed of 12-inch-thick reinforced concrete and sized to the entire 210,000-gallon capacity of the fuel-oil storage tank. The fuel tank is also provided with a fixed pipe foam application system arranged to deliver foam/water solution to the topside of the tank, utilizing a foam eductor and foam concentrate stored in an enclosure located near the tank. Manual application of foam is possible by use of a foam hose line and nozzle provided on the fire engine.

The two 20,000-gallon underground fuel-oil storage tanks are not provided with any fire protection systems. The fire protection features for the two underground fuel-oil pump houses are adequate.

The impoundment diked area and the foam application suppression system protecting the 210,000-gallon aboveground fuel-oil storage tank is adequate. Provisions for manual fire fighting using hydrants and hose lines are also adequate.

9.10.4.24 **Fire-Pump House**

The fire-pump house is a free-standing, reinforced-concrete building approximately 35 feet wide by 53 feet long, situated in the southwest portion of the yard. The building is separated by a wall with a metal door, forming two separate rooms. One room contains the electric-motor-driven fire pump, motor control center, surge tank, and two small water booster pumps. The other room contains the diesel-engine-driven fire pump, fuel tank, pump controller, batteries, air compressor, and water tanks.

None of the equipment at this location is safety-related.

The major combustibles in this building consist of approximately 300 gallons of diesel fuel in the day tank, a minor quantity of lube-oil in the diesel engine pump, and small quantities of cabling.

The reinforced-concrete exterior walls and the wall separating the two rooms have an equivalent fire rating in excess of 3 hours. The door in this wall is fire rated. Floor drains are provided at each of the two fire-pump rooms, which are connected to a common drain line, but the drains in the diesel fire pump room have been plugged.

An outside hydrant and hose house is located approximately 35 feet from the building and is the primary provision for fighting a fire in this building. Three Class C extinguishers are provided in the electric-motor-driven fire-pump room at the doorway between the two rooms.

Ventilation in the two fire-pump rooms is provided by large air intake screens for the diesel engine and double doors to the outside from the electric-driven fire-pump room.

9.10.4.25 Auxiliary Boiler Room

The auxiliary boiler room measures approximately 45 feet wide by 60 feet long and contains the two oil-fired auxiliary boilers with associated equipment. The room is located at the northeast corner of the turbine building, and contains no safety-related equipment.

The combustibles in this room consist of fuel-oil in the burner supply lines and minor quantities of cabling and waste materials.

The floor drainage system in the auxiliary boiler room does not communicate with other areas of the plant; therefore, fuel oil leakage in the room cannot spread to other plant areas via the floor drainage system.

An unmitigated fire in this area would not affect safe shutdown. Because of the corrugated metal wall panels at each side of the room, an explosion would be safely vented outside, and safe-shutdown capability would not be affected.

Primary fire protection for this area is provided by automatic sprinklers. Secondary fire-fighting capability is provided by a manual hose station and two 20-lb dry-chemical extinguishers located within the room. An outside hydrant is located approximately 80 feet away.

The existing fire protection systems are adequate for the hazards presented in this area.

9.10.4.26 Main Switchyard, Surry Nuclear Information Center (SNIC) and Gravel Neck Combustion Turbines

A fire main and accompanying hydrants and hose houses have been installed in the storage area, main switchyard area, SNIC, and Gravel Neck combustion turbine area to provide a greater level of fire protection. The fire main is suppled with water from the existing fire main, which runs alongside the main warehouse.

Hose houses in the area of the Gravel Neck combustion turbine Units 1 and 2 (original gas turbines) are equipped with a foam unit consisting of tanks of foam solution, fire hose, foam proportioner, and nozzles.

The 10-inch fire main routed to the Gravel Neck combustion turbine Units 3, 4, 5, and 6 supplies fire hydrants and a 1500 gpm booster pump with fire water. The booster pump supplies fire hydrants, a foam house for foam discharge into the fuel tanks, foam-type fire hose suppression systems, deluge systems for transformers, and a sprinkler system. Blanked flange and tee provisions will permit future facility expansion.

The underground fire main in this area is classified as a Category III structure and the design is consistent with the non-seismic classification. The system was designed to the requirements of NFPA 24.

9.10.4.27 **Mechanical Equipment Room No. 5**

Mechanical equipment room No. 5 (MER-5) is located at the 9 ft.-6 in. elevation of the Unit 2 turbine building. MER-5 houses two chillers, associated chiller auxiliaries, and electrical equipment. Smoke detectors are installed within MER-5 and are spaced in accordance with National Fire Protection Association (NFPA) Standard 72E.

Appendix R isolation panel AS-2 is located in the electrical area of MER-5. In the event that the Control Room becomes uninhabitable, chillers 1-VS-E-4D and 4E control power can be transferred, and the chillers and their associated equipment can be locally controlled.

One wall of this room is shared with the turbine building. A fire in the turbine building cannot affect safety-related equipment in MER-5 because the walls are constructed of 2-foot thick concrete, and the doors are 3-hour fire-rated. Two 3-hour fire-rated fire dampers are used to seal the duct openings in the roof.

The major combustible material in the room is the lube oil associated with each of the two chiller units. There is also a moderate amount of combustible cable insulation in the room. Portable fire extinguishers are provided in the room and in the nearby area for manual fire suppression.

Equipment in MER-5 is protected from turbine building flooding by the presence of flood dikes at the doors which provide access to the room. The electrical equipment is protected by a 2-foot high wall separating the electrical equipment from the mechanical room and turbine building sump. Backflow from the turbine building drains is prevented by means of backflow preventers installed downstream of the mechanical room drains.

9.10.4.28 **Condensate Polishing Building and Maintenance Building**

The Condensate Polishing Building and Maintenance Building are located east of the Turbine Building and contain various pieces of equipment for processing secondary water and maintenance activities. These areas contain no safe shutdown equipment.

The combustibles in this room consist of lube oil associated with pumps and motors, cables, and other various combustibles associated with maintenance.

An unmitigated fire in this area would not affect safe shutdown. This area is separate from safe shutdown components located in the Turbine Building and other plant areas.

Primary fire protection for this area is provided by automatic sprinklers. Secondary fire-fighting capability is provided by manual hose stations and fire extinguishers located within the rooms. The Condensate Polishing Building is also equipped with smoke detection.

9.10.5 Tests and Inspections

Tests and inspections of fire protection systems are performed in accordance with the Technical Requirements Manual.

9.10.6 Administrative Controls

The fire protection program, previously known as the Fire Protection Plan, includes sections which discuss Fire Brigade organization, structure, training, and records.

Ignition sources used in both safety-related and non-safety-related areas of the station require written authorization from the Supervisor - Nuclear Site Safety except for exempted areas, such as workshops, as delineated in the program. Ignition sources shall be removed from safety-related areas at the end of each workday.

Location of transient combustibles in safety-related areas requires written authorization from the Supervisor - Nuclear Site Safety.

9.10 REFERENCES

1. NFPA 12A, *Halon 1301 Fire Extinguishing Systems,* 1980 Edition.
2. Generic Letter 83-33, *NRC Positions on Certain Requirements of Appendix R to 10 CFR 50.*
3. NUREG/CR-3656, *Evaluation of Suppression Methods for Electrical Cable Fires.*
4. Inspection Report (IR) 50-280, -281/87-07, dated 6/17/87.
5. Virginia Electric and Power Company, North Anna Power Station Units 1 and 2, Response to Generic Letter 88-2, Supplement 4, *Individual Plant Examination of Non-Seismic External Events and Fires,* Serial No. 94-302.

9.10 REFERENCE DRAWINGS

The list of Station Drawings below is provided for information only. The referenced drawings are not part of the UFSAR. This is not intended to be a complete listing of all Station Drawings referenced from this section of the UFSAR. The contents of Station Drawings are controlled by station procedure.

	Drawing Number	Description
1.	11448-FB-2A	Arrangement: Fire Protection

Table 9.10-1
FIRE PROTECTION SYSTEM COMPONENT DESIGN DATA

Fire pumps	
Number	2 (1 motor and 1 engine-driven)
Type	Horizontal centrifugal
Motor horsepower	185 hp
Engine horsepower	185 hp
Capacity, each	2500 gpm
Head at rated capacity	231 ft
Design pressure	175 psig
Design temperature	80°F
Seal	Packing
Material	
Pump casing	Cast iron
Shaft	Steel
Impeller	Bronze
Earthquake design	Class I (engine-driven pump only)
Pressure maintenance pump	
Number	1
Type	Horizontal radial vane
Motor horsepower	10.0 hp
Capacity	30 gpm
Head at rated capacity	252 ft
Design pressure	125 psig
Design temperature	90°F
Seal	Mechanical
Material	
Pump casing	Cast iron
Shaft	316 Stainless Steel
Impeller	316 Stainless Steel
Hydropneumatic tank	
Number	1
Type	Cylindrical, vertical
Capacity	475 gal
Design pressure	200 psig
Design temperature	100°F
Material	Carbon steel
Design code	ASME VIII
Fire-pump oil tank	
Number	1
Type	Flat oval, horizontal

Table 9.10-1 (continued)
FIRE PROTECTION SYSTEM COMPONENT DESIGN DATA

Fire-pump oil tank (continued)	
Capacity	300 gal
Design pressure	Atmospheric
Design temperature	90°F
Material	Steel
Design code	ASME VIII
Earthquake design	Class I
Water storage tank	
Number	2
Type	Cylindrical, vertical
Capacity	250,000 reserved gal
Design pressure	Atmospheric
Design temperature	5°F
Material	Carbon steel
Design code	NFPA No. 22
Air compressor	
Number	1
Capacity	8.11 scfm
Discharge pressure	100 psig
Low-pressure carbon dioxide storage tank	
Number	1
Type	Cylindrical, horizontal
Capacity	17 tons
Operating pressure	295-305 psig
Design pressure	363 psig
Design temperature	0°F
Material	Steel
Design code	ASME VIII
Halon 1301 Storage Cylinders - Emergency Switchgear Rooms	
Number	26 (8 for Unit 1, 9 for Unit 2, 9 spare)
Type	Cylinder, vertical
Capacity	335 lb (18 cylinders) & 240 lb (8 cylinders)
Design Pressure	360 psig
Design Temperature	70°F
Material	Steel
Design Code	NFPA 12A

Figure 9.10-1
FIRE PROTECTION SYSTEM ARRANGEMENT

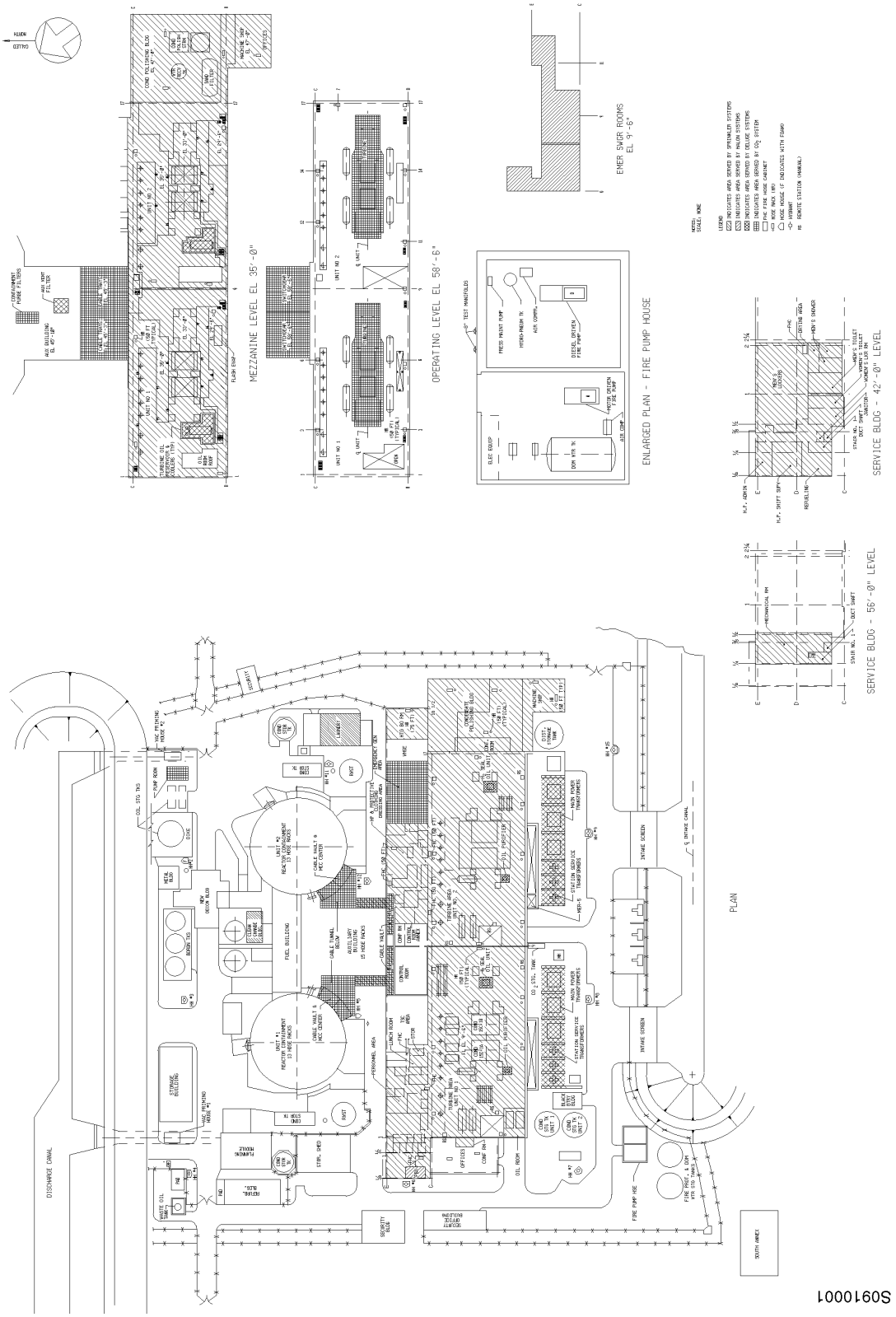

Intentionally Blank

9.11 WATER SUPPLY AND TREATMENT SYSTEMS

9.11.1 Well-Water Supply System

The well-water supply system provides makeup water to the fire protection and domestic water storage tanks. Water from the fire protection and domestic water storage tanks is then used to supply the hydropneumatic tank in the potable water system and the fire protection system. The well-water supply system is shown on Figure 9.11-1.

There are three cased water wells located south of the site, wells B, C, and E as shown on Figure 15.1-1. Each well has a 200-gpm submersible pump discharging to a wellwater storage tank. Each well pump has a separate underground discharge line that is interconnected at the storage tank. Centrifugal-type well-water transfer pumps deliver water from the storage tank to consuming systems as required.

The well-water supply system is designed to be automatically or manually controlled.

9.11.2 Domestic Water Supply System

A 4000-gallon hydropneumatic tank, located in the fire-pump house, is provided for the domestic water supply system. Pressure in the hydropneumatic tank is maintained at 40 to 60 psig by a pressure system, consisting of a pressure-level regulator, air compressor, and related controls and accessories. Hypochlorinator equipment provides a means of chlorinating the domestic water supply. Piping from the hydropneumatic tank supplies cold water to safety showers, drinking water coolers, hot-water storage tanks, and domestic cold water throughout the station.

Domestic water supply component design data are given in Table 9.11-1.

9.11.3 Make-Up Water System

The make-up water system is shown on Figure 9.11-2 and Reference Drawings 1, 2, 3, 4, and 6. The system consists of equipment for the production of high-purity water by demineralizing well water for makeup to the various station systems. The flash evaporation system (Reference Drawing 1) is no longer used to treat water, however, the equipment remains installed in the plant.

Well water is stored in the Fire Protection and Domestic Storage Tank. The Condensate Polishing System is available to provide supplementary chemical treatment of condensate for feedwater conditioning. High-purity water is pumped to the primary-water storage tanks (Section 9.1) for reactor plant makeup, and to the condensate storage tank for secondary plant makeup.

The fire protection system is discussed in Section 9.10.

9.11 REFERENCE DRAWINGS

The list of Station Drawings below is provided for information only. The referenced drawings are not part of the UFSAR. This is not intended to be a complete listing of all Station Drawings referenced from this section of the UFSAR. The contents of Station Drawings are controlled by station procedure.

	Drawing Number	Description
1.	11448-FM-077A	Flow/Valve Operating Numbers Diagram: Flash Evaporator System, Unit 1
	11548-FM-077A	Flow/Valve Operating Numbers Diagram: Flash Evaporator System, Unit 2
2.	11448-FM-077B	Flow/Valve Operating Numbers Diagram: Flash Evaporator System, Unit 1
3.	11448-FM-077C	Flow/Valve Operating Numbers Diagram: River Water Filtration System, Unit 1
4.	11448-FM-077F	Flow/Valve Operating Numbers Diagram: Demineralizer Regeneration System, Unit 1
5.	11448-FM-077E	Flow/Valve Operating Numbers Diagram: Waste Neutralization System, Unit 1
6.	11548-FM-077D	Flow/Valve Operating Numbers Diagram: Distillate Storage and Transfer System, Unit 2

Table 9.11-1
DOMESTIC WATER SUPPLY COMPONENT DESIGN DATA

Hydropneumatic tank	
Number	1
Type	Cylindrical, horizontal
Capacity	4000 gal
Design pressure	100 psig
Design temperature	100°F
Material	Carbon steel
Design code	ASME VIII
Water booster pump	
Number	2
Type	Centrifugal, inline
Motor horsepower	15 hp
Capacity	300 gpm
Head at rated capacity	139 ft
Design pressure	135 psig
Design temperature	90°F
Seal	Packing
Material	
Pump casing	Cast iron
Shaft	SS 316
Impeller	Bronze
Air compressor	
Number	1
Capacity	8.11 scfm
Discharge pressure	60 psig

Figure 9.11-1
WELL WATER SYSTEM

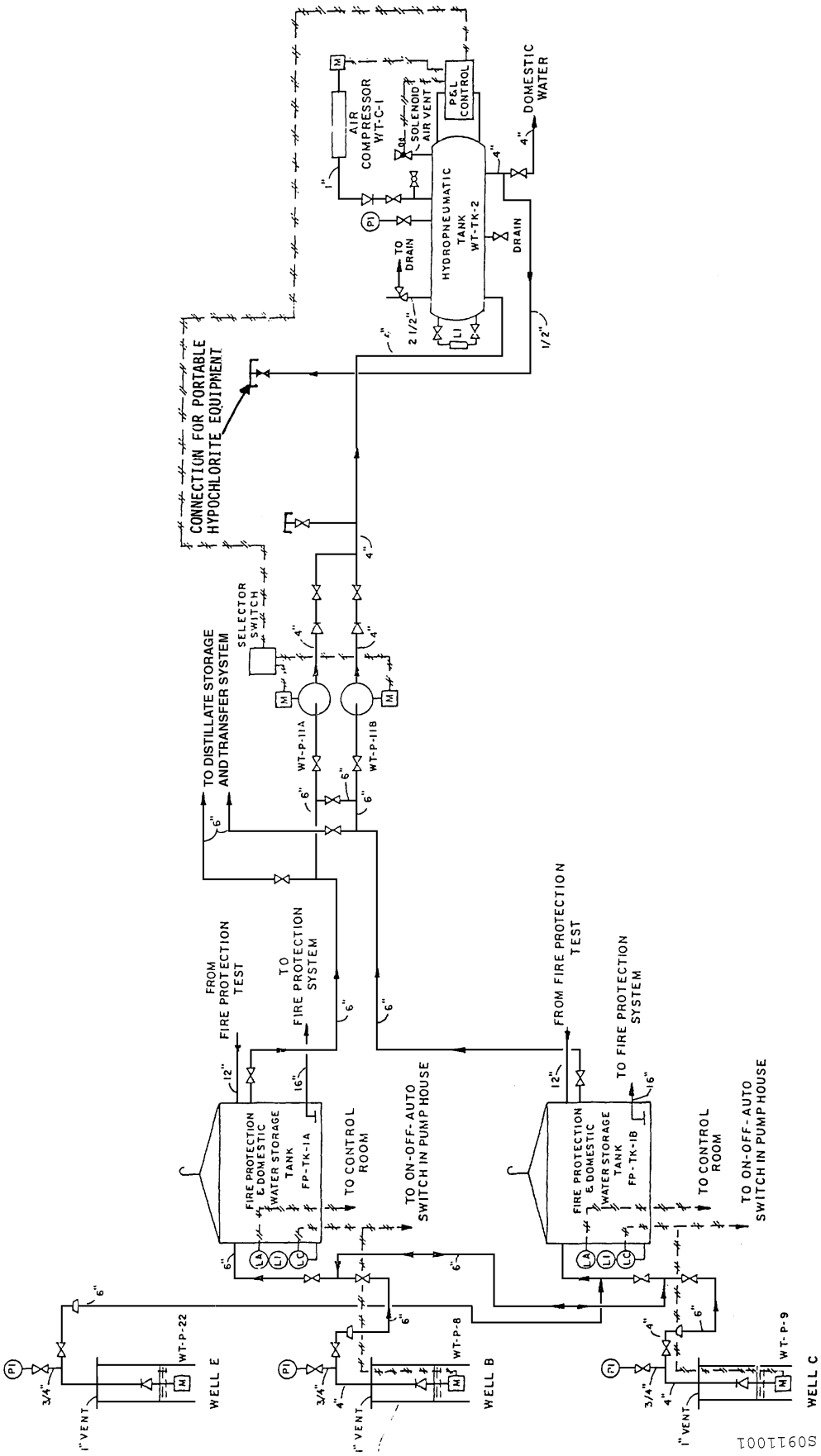

Figure 9.11-2
DEMINERALIZERS

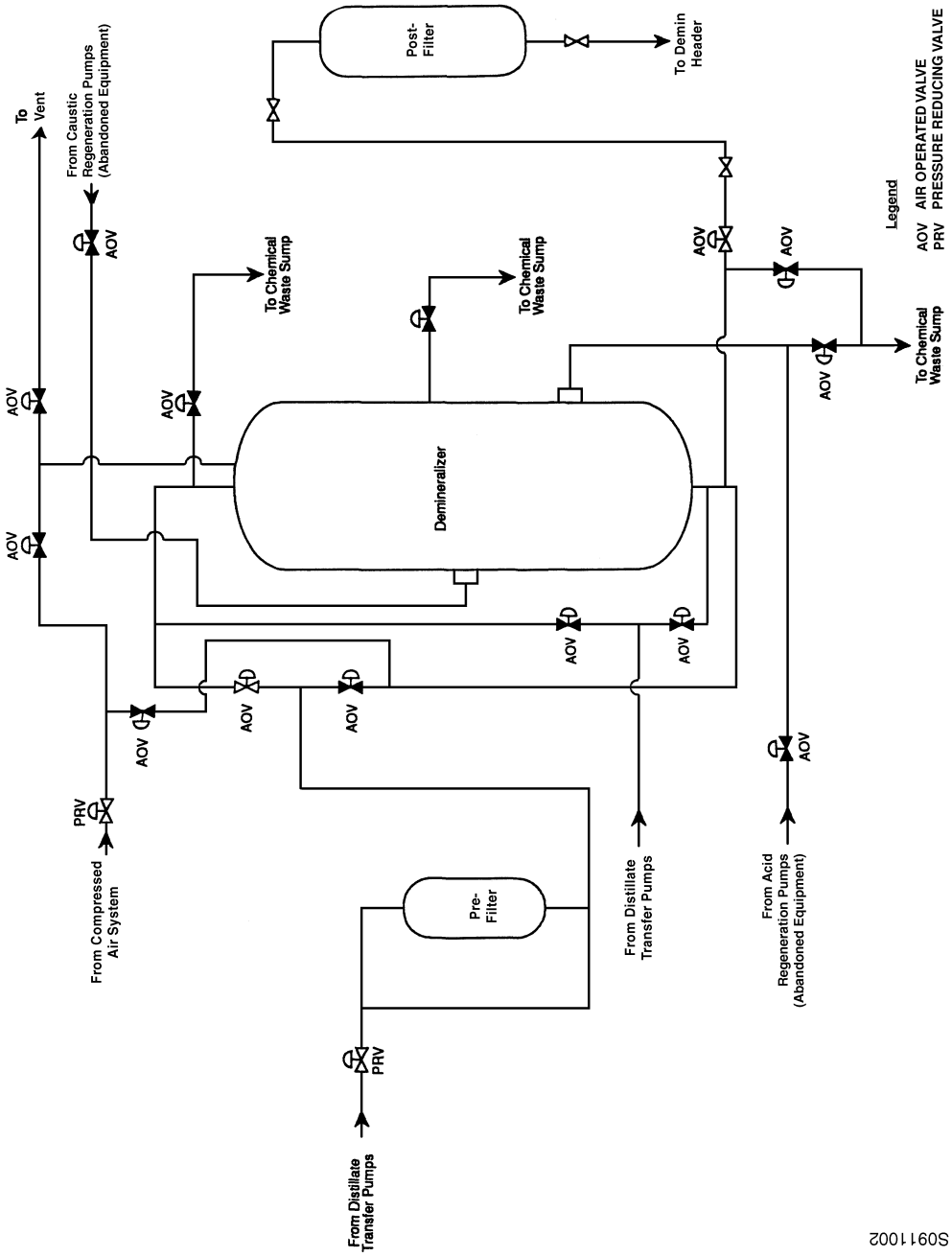

Intentionally Blank

9.12 FUEL HANDLING SYSTEM

The fuel handling system provides a safe, effective means of transporting and handling fuel from the time it reaches the station in an unirradiated condition until it leaves the station after postirradiation cooling.

The system is designed to minimize the possibility of mishandling that could cause fuel damage and potential fission product release.

The fuel handling system consists basically of:

1. The reactor cavities, one in each unit's containment structure, which are flooded only during unit shutdown for refueling, and a manipulator crane for each unit.
2. The spent fuel storage pool, which is maintained full of borated water and is always accessible to operating personnel, and a movable platform with hoists. It is shared by both units.
3. The fuel transfer system for each unit, which consists of an underwater conveyor that carries the fuel from the reactor cavity, through the containment wall, and into the spent fuel storage pit.

9.12.1 Design Bases

The fuel handling system and areas comply with appropriate criteria, as discussed in Section 1.4. The applicable criteria are:

Criterion 4—Sharing of Systems

Criterion 18—Monitoring Fuel and Waste Storage

Criterion 66—Prevention of Fuel Storage Criticality

Criterion 67—Fuel and Waste Storage Decay Heat

Criterion 68—Fuel and Waste Storage Radiation Shielding

9.12.2 System Design and Operation

Each reactor is refueled with equipment designed to handle the spent fuel under water from the time it leaves the reactor until it is placed in a cask for shipment and/or storage on site. Boric acid is present as required in the water to ensure subcritical conditions during all phases of the refueling process.

In each reactor cavity, in each unit's containment, fuel is removed from the reactor vessel, transferred through the water, and then placed in the fuel transfer system by a manipulator crane. There is a separate fuel transfer system with each unit. It is then transferred through the fuel transfer tube to the spent fuel pool. Fuel is removed from the fuel transfer system and placed in

storage racks with a long manual tool suspended from an overhead electric monorail hoist on a bridge structure mounted on a movable platform that runs over the new fuel and spent fuel storage areas, which are common to the two units. After a sufficient decay period, the fuel may be removed from storage and loaded into a cask for removal to the onsite Independent Spent Fuel Storage Installation pad or to offsite facilities.

New fuel assemblies are received and stored in racks in the new fuel storage area. The new fuel storage area does not contain any water. New fuel is delivered to the reactor by transferring it from the new fuel storage area to the spent fuel storage pool and taking it through the transfer system. The new fuel storage area is sized for storing two-thirds of a core plus 20%, as detailed in Table 9.12-1. A portion of the fuel for the initial core loading was temporarily stored in the spent fuel pool.

The reactor cavity and spent fuel pool are reinforced-concrete structures with butt-welded stainless steel plate liners. These concrete structures are designed as Seismic Class I to withstand the anticipated earthquake loadings.

All liner butt welds conform strictly to the requirements of Section IX of the ASME Code, and are provided with test chambers to check for leaktightness.

Fuel-handling data are given in Table 9.12-1.

9.12.3 Fuel-Handling Structures

9.12.3.1 Refueling Cavities

Each reactor cavity is a reinforced-concrete structure forming a pool above the reactor when filled with borated water for refueling. The cavity is filled to a depth that limits the radiation at the surface of the water to 50 mR/hr during those brief periods when a fuel assembly is transferred to the upender and is at the closest approach to the surface of the water.

The reactor vessel flange is sealed to the bottom of the refueling cavity by a segmented seal ring that prevents leakage of refueling water from the cavity. This seal is fastened and closed after reactor cooldown, but before flooding the cavity for refueling operations. The segmented seal uses a passive sealing design which will preclude failure and leakage. During reactor operation, the seal is removed and normally stored outside the containment structure.

The cavity is large enough to provide storage space for the reactor upper internals, the control rod assembly drive shafts, miscellaneous refueling tools, and the lower internals.

The walls and floor of the refueling cavity are lined with 0.25-inch type 304 stainless steel.

9.12.3.2 Fuel Transfer Canals and Transfer Tubes

In each unit, a fuel transfer canal extends along one wall of the refueling cavity to the inside surface of the reactor containment. The canal is formed by two concrete shielding walls, which

extend upward to the same elevation as the refueling cavity. The floor of the canal is at a lower elevation than the refueling cavity, to provide the greater depth required for the fuel transfer system upending device and the control rod assembly change fixture.

9.12.3.3 **Spent Fuel Pool**

The spent fuel pool is designed for the underwater storage of spent fuel assemblies and control rod assemblies after their removal from the reactor. It is designed to accommodate a total of approximately 1044 fuel assemblies. The nominal size of a full core is 157 assemblies.

The spent fuel pool is constructed of reinforced concrete. The entire interior of the pool is lined with 0.25-inch type 304 stainless steel.

High-density storage racks erected on the pool floor are provided to hold the spent fuel assemblies. Fuel assemblies are placed in vertical cells, grouped in parallel rows with a minimum center-to-center spacing of 14 inches. The racks ensure the necessary spacing between assemblies to prevent criticality even if the pool were inadvertently filled with unborated water. Control rod assemblies and other non-fuel inserts/components may be stored in the fuel assemblies. Storage rack design details are given in Appendix 9A.

Failed fuel rods removed when reconstituting fuel assemblies will be stored in a fuel rod canister which will be stored in one cell of the spent fuel storage racks. Each fuel rod canister is manufactured to the same exterior dimensions as a fuel assembly with a top nozzle similar to the fuel assembly. This will permit handling of the canister using normal fuel handling equipment and storage in the rack. Each canister contains tubes for the storage of individual fuel rods. The accidental dropping of a fully loaded fuel rod canister in the spent fuel pool is conservatively bounded by the Fuel Handling Accident in the Spent Fuel Pool described in Section 14.4.1.3, since that accident assumes all 204 rods of the highest power assembly are failed. The fuel rod canisters hold less than 204 rods.

Radiation monitors for the spent fuel pool area are provided as described in Section 11.3.4.

9.12.3.4 **New-Fuel Storage**

New fuel assemblies and control rod assemblies are stored in a separate area of the fuel building, where they are unloaded from trucks. This storage area is designed to hold 126 new fuel assemblies in vertical racks, and is used primarily for the storage of the one-third replacement core plus 10% for each of the two units. The new fuel assemblies are stored in racks in parallel rows having a minimum center-to-center distance of 21 inches.

Radiation monitoring for the new fuel storage area is discussed in Section 11.3.4.

9.12.4 Refueling Equipment

9.12.4.1 Reactor Vessel Stud Tensioners

Stud tensioners are used to make up the reactor vessel head closure joint. During this process all studs are stressed sufficiently to hold the closure heads seated and maintain leaktightness during operation.

The stud tensioner is a hydraulically operated device provided to permit preloading and unloading of the reactor vessel closure studs at cold shutdown conditions. Stud tensioners minimize the time required for the tensioning or unloading operations, minimize thread damage, and permit precision stud tensioning. Three tensioners are provided for each unit, and they are applied simultaneously to three studs 120 degrees apart. One hydraulic pumping unit operates the tensioners, which are hydraulically connected in parallel. The studs are tensioned to their operational load in two steps to prevent high stresses in the flange region and unequal loadings in the studs. Relief valves are provided on each tensioner to prevent overtensioning of the studs due to excessive pressure. In addition, micrometers are provided to measure the elongation of the studs after tensioning.

9.12.4.2 Reactor Vessel Head Lifting Device

The reactor vessel head lifting device consists of a welded and bolted structural steel frame with suitable rigging to enable the reactor containment crane operator to lift the bead and store it during refueling operations.

9.12.4.3 Reactor Internals Lifting Device

The reactor internals lifting device is a structural frame suspended from the reactor containment polar crane. One lifting device is provided for each unit. The frame is lowered onto the guide tube support plate of the internals and manually bolted to the support plate by three bolts, with long torque tubes extending up to an operating platform on the lifting device. Bushings on the frame engage guide studs in the vessel flange to provide close guidance during removal and replacement of the internals package.

9.12.4.4 Manipulator Crane

The manipulator crane is a rectilinear bridge and trolley crane with a vertical mast extending down into the reactor cavity water. A manipulator crane is provided for each unit. The bridge spans the reactor cavity and runs on rails set into the floor along the edge of the reactor cavity. The bridge and trolley motions are used to position the vertical mast over a fuel assembly in the core.

A long tube with a pneumatic gripper on the end is lowered down from the mast to grip the fuel assembly. The gripper tube is a telescopic device that is long enough that the upper end is still contained in the mast when the gripper end contacts the fuel. A winch mounted on the trolley

raises the gripper tube and fuel assembly up into the mast tube. The fuel, while inside the mast tube, is transported to its new position.

All controls for the manipulator crane are mounted on a console located on the bridge. The bridge is positioned on a coordinate system laid out on one rail. The camera assembly monitors the bridge target and transmits that position to the closed circuit television screen. The operator visually observes the bridge scale assembly to line up the bridge to the appropriate location. The scale is read directly by the operator at the console. The drives for the bridge, trolley, and winch are variable speed, and include a separate inching control for each drive. Electrical interlocks and limit switches on the bridge and trolley drives protect the equipment. The bridge, trolley, and winch can also be operated manually using handwheels on the motor shafts.

The suspended weight on the gripper tool is monitored by an electrical load cell indicator mounted on the control console. A load in excess of approximately 2700 lb stops the winch drive from moving in the up direction. The gripper is interlocked through a weight-sensing device, and also a mechanical spring lock, so that it cannot be opened when supporting a fuel assembly.

In addition to the travel limit switches on the bridge and trolley drives, the following safety features are incorporated in the system:

1. Bridge, trolley, and winch drives are mutually interlocked to prevent simultaneous operation of any two drives.
2. Bridge and trolley main motor drive operation is prevented, except when the GRIPPER TUBE UP or GRIPPER UP DISENGAGED position switch is actuated.
3. A solenoid valve in the air line to the gripper is de-energized, except when less than or equal to 600 lb suspended weight is indicated by a force gauge. As backup protection for this interlock, the mechanical weigh-actuated lock in the gripper prevents operation of the gripper under load, even if air pressure is applied to the operating cylinder.
4. Hoist drive circuit in the up direction is opened when the “overload” switch is actuated.
5. Hoist drive circuit in the up direction is operable only when either the GRIPPER ENGAGED or GRIPPER DISENGAGED indicating switch on the gripper is actuated.
6. The limit switch in the electrical load cell indicator parallels the gripper-engaged switch. To complete the “hoist-up” circuit, either the gripper must be engaged or the load cell indicator must read less than 1200 lb. This will prevent inadvertently raising a disengaged fuel assembly that is for some reason hung up on the gripper.
7. Bridge and trolley drives are interlocked in the direction of the transfer system so that the bridge is prevented from traveling beyond the core area unless the trolley is aligned with the refueling canal centerline. The trolley drive is locked out when the bridge is moved beyond the edge of the core. The trolley drive is not locked out; it is enabled in the refueling canal area.

Suitable restraints are provided between the bridge and trolley structures and their respective rails to prevent derailing due to the design-basis earthquake. The manipulator crane is designed to prevent disengagement of a fuel assembly from the gripper under the design-basis earthquake. The manipulator crane is parked to one side of the reactor and secured when not in use. The manipulator crane is designed as a Class I component (Section 15.2.1).

9.12.4.5 **Motor-Driven Platform and Hoist**

The movable platform with hoists in the fuel building is a wheel-mounted, motor-driven platform with overhead trusses supporting electric monorail hoists for lifting new fuel assemblies, spent fuel assemblies, and fuel assembly inserts. The platform spans the spent fuel pool and may be maneuvered over any part of the fuel building area necessary for fuel handling operations. The hoist travel and the length of the long fuel-handling tool are designed to limit the maximum lift of a spent fuel assembly to ensure an adequate water shield above the fuel. The movable platform is designed as a Class I component (Section 15.2.1), and is parked to one side of the spent fuel racks and secured when not in use. Suitable restraints are provided between the bridge and the rails to prevent derailing during the design-basis earthquake.

9.12.4.6 **Fuel Handling Tools**

A variety of fuel assembly and component handling tools are used during the core alteration process in the containment and the fuel building, during the loading or unloading of storage casks, or during the loading of shipping casks.

In the containment, movement will be between core locations and the fuel upender. Use of the rod cluster control change fixture is prohibited by procedure because of concerns related to potential loss of refueling cavity level. Fuel assembly movements in the containment are done with the manipulator crane and gripper tube. The locations of these components are shown on Reference Drawings 1 and 2.

In the fuel building, movement during refuelings will be between the fuel upender and/or fuel storage locations and/or the fuel elevator. Fuel assembly movements for spent fuel casks will be between fuel storage locations and the cask. Fuel and component movements in the fuel building are done with the following tools:

1. Spent fuel assembly handling tool
2. Thimble plug handling tool
3. Hand-operated burnable poison rod assembly handling tool
4. Rod cluster control assembly handling tool

9.12.4.7 **Reactor Irradiation Sample and Sample Handling Tool**

As part of the reactor vessel irradiation surveillance program, reactor irradiation sample assemblies are removed from the vessel at approximately 10-year intervals for examination and

testing. The sample assemblies are approximately 10 feet long, 1.25 inches in cross-section, and weigh approximately 25 lb. To remove the sample, a sample basket is transferred from the fuel building to the containment using the fuel transfer system. The sample assembly is removed from the vessel using the sample handling tool, and placed in the sample basket. The sample basket is then returned to the fuel building for storage in the spent fuel racks. The sample is shipped off-site for analysis within a short period of time.

9.12.4.8 **Core Mapping Equipment**

Following core alterations, the proper location of fuel assemblies is verified. An underwater television camera and videotape equipment may be used. The camera is suspended above the fuel assemblies during the mapping process.

9.12.4.9 **Fuel Transfer System**

The fuel transfer system for each unit, shown in Reference Drawing 2, is an underwater conveyor car and track system that extends from the refueling canal through the transfer tube and into the spent fuel pool. The conveyor car receives a fuel assembly in the vertical position from the manipulator crane, after which the fuel assembly is tilted to a horizontal position and passed through the transfer tube to the spent fuel pool. Inside the spent fuel pool, it is tilted to a vertical position in preparation for placement in the storage racks. Cranes over the spent fuel pool are used for moving new fuel assemblies, spent fuel assemblies, and fuel assembly inserts (Reference Drawing 3).

During reactor power operation, the conveyor car is stored in the containment and the transfer tube cover is in place on the transfer tube to seal the reactor containment penetration.

9.12.4.10 **Fuel Elevator**

The fuel elevator lowers new fuel assemblies from the top to the bottom of the spent fuel pool so that the new fuel-handling tool and the hook and cable of the traveling platform hoist do not become contaminated by immersion in the pool water. Removal of the fuel assembly from the elevator at the bottom of the pool is accomplished with the long fuel-handling tool, which also is used for transferring spent fuel. To ensure that the spent fuel is not raised above the water level in the spent fuel pool, a key lock switch has been placed in series with the elevator up-button. The fuel elevator is a Class I component.

9.12.4.11 **Control Rod Assembly Changing Fixture**

A fixture is mounted on a wall of each reactor cavity for removing control rod assemblies from spent fuel assemblies and inserting them into other fuel assemblies. The fixture consists of two main components: a guide tube mounted to the wall for containing and guiding the control rod assembly, and a wheel-mounted carriage for holding the fuel assemblies and positioning fuel assemblies under the guide tube. The guide tube contains a pneumatic gripper on a winch that grips the control rod assembly and lifts it out of the fuel assembly. By positioning the carriage, a new fuel assembly is brought under the guide tube and the gripper lowers the control rod

assembly into place. The manipulator crane loads and removes the fuel assemblies into and out of the carriage. The above noted equipment is available. However, it is not used at this time. The removal and reinsertion of the control rods into the fuel assemblies are performed in the spent fuel pool. A portable change tool is utilized to relocate the control rods in the spent fuel pool.

9.12.4.12 **Refueling Water Storage Tank**

The refueling water storage tank of each unit (Section 6.2.2.1) provides the water for filling the reactor cavity and for certain safeguards systems.

9.12.4.13 **Fuel Cask Trolley**

The crane for handling the spent fuel cask is a trolley of 125-ton capacity running on fixed rails. The rails span the east end of the fuel pool in an area where no spent fuel storage racks are installed. The rails pass over the decontamination building and then over the roadway. The fuel cask trolley is designed as a Seismic Category I component.

Restraints are provided to prevent displacement of the trolley from the rails.

A 10-ton auxiliary hoist is installed on the South side of the crane. A 1-ton electric chain hoist is installed on the South side and top of the crane to permit fuel-handling tools to be removed from the spent fuel pool for the purposes of inspection or maintenance.

The spent fuel cask and other heavy objects cannot be moved over stored fuel. The 125-ton fuel building crane is a trolley that moves only in a north-south direction over an area at one end of the fuel pool. Spent fuelracks are excluded from this area.

Originally there was a built-up pad of energy-absorbing material over the floor of the fuel pool in the cask loading area. This has been replaced with a pad requiring no maintenance. The new cask pad utilizes large pipes that will plastically deform under a heavy-impact load and thus prevent pool damage. The pipes are open-ended to allow for free movement of water. All materials are stainless steel for corrosion resistance. The cask pad is designed to prevent significant damage to the spent fuel pool from a dropped shipping cask and is designed to protect the pool against spent fuel casks of various sizes. The cask pad also provides a support platform for the shipping cask during loading of spent fuel.

The new cask pad has been installed in the recessed area provided in the spent fuel pool and located in the northeast corner of the pool. A smaller pad has been installed on the pool floor just south of the cask loading area. The smaller pad extends the length of the protected area to prevent unacceptable damage to the fuel pool bottom from the postulated accident of the cask tipping after hitting the bottom. The design of the smaller pad is similar to the larger cask pad.

An analysis has been performed for dropping of a spent fuel shipping cask into the spent fuel pool. The analysis addressed the consequences of a cask drop to adjacent spent fuel and to the pool structure. See Section 9B.1.5.

If the stainless steel fuel pool liner plate is damaged by a cask-drop accident, water could leak into the liner test channels. The test channels are connected to a 0.5-inch pipe, which is buried under the fuel pool and leads to the fuel building sump. This pipe is plugged at the entrance to the sump to prevent any water from escaping from the fuel pool. Should the plug fail or be inadvertently left off, and if the impact damaged the liner at a test channel, water would leak out of the fuel pool at a rate not exceeding 5 gpm.

The normal makeup capability from the primary-grade water system is 200 gpm. An emergency source of makeup is available from the fire main at a rate of up to 2000 gpm.

9.12.4.14 **Polar Crane**

The overhead crane in the containment is of the polar configuration and is supported on the circular crane wall. The crane has two main hooks with a capacity of 140 tons each, with a maximum hook elevation of approximately 52 feet above the operating floor. The polar crane has access to the entire area within the crane wall. The crane is designed as a Class I component. No parts of the crane can be dislodged during an earthquake.

Restraints are provided between the trolley and bridge and between the bridge and rails to prevent derailing during a design-basis earthquake.

9.12.5 Refueling Procedure

9.12.5.1 **Design Bases**

The refueling operation follows a detailed operating procedure that is established to provide a safe, efficient refueling operation. The movement of heavy loads near spent fuel is discussed in Appendix 9B. The following significant points are ensured by the refueling procedure:

1. The refueling water contains approximately 2500 ppm boron. The boron concentration, together with the control rods, is sufficient to keep the core approximately 5% delta k/k subcritical during the refueling operations. The boron concentration is sufficient to maintain the core shutdown if all of the control rods were removed from the core.
2. The water level in the reactor cavity is high enough to keep the radiation levels within acceptable limits when the fuel assemblies are being removed from the core. This water also provides adequate cooling for the fuel assemblies during transfer operations.
3. Fuel-handling operations and equipment are designed so that the possibility of fuel mishandling or damage is minimized.

9.12.5.2 **Preparation Sequence**

1. For Unit 1, the reactor is shut down and cooled to ambient conditions.
2. For Unit 1, the control rod assembly drive mechanism missile shield is removed and stored in the containment.

For Unit 2, CRDM cables, RPI cables, instrument leads, and RV head vent valve cables are disconnected and the CRDM cable bridge and RPI cable bridge are raised.

3. For Unit 1, control rod drive assembly mechanism cables and cooling air ducts are disconnected from the mechanisms and stored in the containment.

   For Unit 2, the RV head lift tripod is installed on the Head Assembly Upgrade Package and cooling air ducts are disconnected from the plenum and stored in the containment.

4. Reactor vessel head insulation and instrument leads are removed.
5. The reactor vessel cavity seal ring is placed in position and installed.
6. The fuel transfer tube cover is removed.
7. The reactor vessel head nuts are loosened with the hydraulic tensioners.
8. The reactor vessel head studs are removed for testing and storage.
9. Checkout of the fuel transfer device and manipulator crane is completed.
10. Guide studs are installed in three holes, and the remainder of the stud holes are plugged.
11. Final preparation of underwater lights and tools is made.
12. The reactor vessel water-level is raised to the level of the vessel flange. The water is transferred from the refueling water storage tank through the reactor vessel.
13. The reactor vessel head is unseated and raised with the reactor containment polar crane and held for inspections of the head lift rig.
14. The source range instrumentation is monitored to verify that the RCC's are not being removed with the closure head.
15. When the reactor vessel head is lifted between 8 and 10 feet, the head lift is stopped and a visual inspection is made to verify that the RCC element drive shafts are free from mechanism housing and were not raised with the closure head.
16. The reactor vessel head is removed to its storage pedestal on the bottom floor of the reactor containment.
17. As the vessel head is being stored, the cavity is immediately being filled to minimize radiation exposure. The refueling cavity is filled 1 ft. 6 in. to check cavity seal integrity. Then the cavity is filled to approximately 16 feet.
18. Before removing the reactor vessel upper internals, all the control rod assembly drive shafts are unlatched and verified.
19. The reactor vessel internals lifting rig is lowered into position by the containment crane and latched to the support plate.

20. The cavity is filled to between the 26 and 27 feet level in coordination with lifting the internals.
21. The reactor vessel upper internals package is lifted out of the vessel and placed in the underwater storage stand on the floor of the refueling cavity.
22. Removal, insertion, and shifting of fuel assemblies proceed in accordance with the refueling sequence (Section 9.12.5.3).

9.12.5.3 **Refueling Sequence**

The refueling sequence is started with the manipulator crane. The sequence for fuel assemblies is as follows:

1. Spent fuel is removed from the core and placed into the fuel transfer system for removal to the spent fuel pool.
2. New fuel and partially spent fuel assemblies are brought in from the spent fuel pool through the fuel transfer system and loaded in the core.
3. The subcriticality of the reactor will be determined after a minimum of 8 fuel assemblies have been added to the reactor core. Thereafter, whenever a fuel assembly is added to the reactor core, either the source range counts is to be monitored for a doubling, or a reciprocal curve of source neutron multiplication is to be plotted to verify the subcriticality of the core at periodic intervals.

9.12.5.4 **Reassembly Sequence**

1. The fuel transfer system conveyor car is parked and the fuel transfer tube isolation valve closed.
2. The reactor vessel internals package is picked up by the reactor containment polar crane and replaced in the reactor vessel. As the upper internals are lowered into the reactor vessel, the refueling cavity water level is lowered to an intermediate level. The reactor vessel internals' lifting rig is removed to storage.
3. The control rod assembly drive shafts are relatched to the control rods.
4. The refueling cavity water-level is lowered, and water is pumped from the refueling cavity into the refueling water storage tank.
5. When the water in the refueling cavity is slightly below the vessel flange level, the pump down is secured.
6. The reactor vessel head is picked up by the reactor containment polar crane and positioned over the reactor vessel.
7. The reactor vessel head is slowly lowered to engage the guide studs. Lowering the head is stopped when the guide studs penetrate the bolt holes.

8. Lower inspectors into the cavity and visually inspect for drive shaft to thermal sleeve alignment. Slowly lower the reactor vessel head until all drive shafts are in their thermal sleeve guide funnels.
9. The reactor vessel head is seated.
10. The guide studs are removed to their storage rack. The stud hole plugs are removed.
11. The fuel transfer tube cover is replaced.
12. The reactor vessel cavity seal may be removed anytime following replacement of the transfer tube cover.
13. The head studs are replaced and retensioned.
14. Vessel head insulation is replaced.
15. For Unit 1, electrical leads and cooling air ducts are reconnected to the control rod assembly drive mechanisms.

    For Unit 2, the CRDM cable bridge and RPI cable bridge are lowered into place and electrical leads and air cooling ducts are reconnected. The head lifting rig tripod is removed.
16. For Unit 1, the control rod assembly drive mechanism missile shield is picked up with the reactor containment crane and replaced.
17. - An inservice leak test is performed on the reactor coolant system.
    - Control rod assembly drive operation is checked.
    - Preoperational start-up tests are performed.

NOTE: The activities listed under item #17 are not necessarily performed in that order.

9.12.6 Fuel Handling System Design Evaluation

Underwater transfer of spent fuel provides essential simplicity and safety in handling operations. Water is an effective, economic, and transparent radiation shield, and a reliable cooling medium for removal of decay heat.

Basic provisions to ensure the safety of refueling operations include the following:

1. Gamma radiation levels in the containment and fuel storage areas are continuously monitored. These monitors provide an audible alarm at the initiating detector and in the control room, indicating an unsafe condition. Continuous monitoring of reactor neutron flux provides immediate indication and alarm in the control room of an abnormal core flux level.
2. Violation of containment integrity is not permitted when the reactor vessel head is removed unless the shutdown margin is maintained greater than 5% delta k/k.
3. After a minimum of 8 fuel assemblies have been added to the reactor core, the reciprocal curve of source neutron multiplication is monitored to verify the subcriticality of the core.

4. The operation is adequately supervised and planned.
5. During REFUELING OPERATIONS, the personnel airlock, the equipment hatch, and other containment penetrations must be capable of being closed. 'Capable of being closed' means the openings are able to be closed; they do not have to be sealed or meet the leakage criteria of TS 4.4.

9.12.6.1 **Incident Control**

Direct communication between the control room and the reactor cavity manipulator crane will be established whenever changes in core geometry or conditions are taking place. This provision allows the control room operator to inform the manipulator crane operator of any impending unsafe condition detected by control room indicators during fuel movement.

During refueling operations personnel will be assigned tasks to ensure that open containment penetrations are closed following a fuel handling accident in containment. There should be an individual, who, in addition to their normal duties, is also responsible for making sure one of the personnel airlock doors is closed when the last person is out of containment. The individual should not be outside the protected area but neither does the person have to remain near the airlock. Closure of the equipment access hatch is the duty of a team trained for that task and controlled in accordance with station procedures. Equipment hatch closure will be accomplished as allowed by containment dose rates, which may require containment entry after the personnel airlock has been closed. A part of the closure responsibilities is the removal of objects that penetrate the equipment access hatch and the personnel airlock and would hinder closure. These objects include, but are not limited to guards over the door seals to protect the seals from being damaged, tracks that allow movement of heavy equipment into and out of containment, temporary power lines, etc. These objects are not considered blocking closure as long as they are removable in a reasonable time.

9.12.6.2 **Malfunction Analysis**

An analysis of the consequences of a fuel-handling incident is presented in Section 14.4.1.

9.12.7 Minimum Operating Conditions

Minimum operating conditions for the fuel handling system are contained in the Technical Specifications.

9.12.8 Tests and Inspections

Prior to initial fueling, preoperational checkouts of the fuel handling equipment were performed to ensure proper performance of the fuel handling equipment, and to familiarize operating personnel with operation of the equipment. A dummy fuel assembly was used.

Electrical lighting receptacles are mounted around the spent fuel pool. These receptacles provide additional lighting during fuel pool inspections. All of the receptacles have weather-proof covers.

Upon completion of initial core loading and installation of the reactor vessel head, certain mechanical and electrical tests were performed prior to initial criticality. The electrical wiring for the control rod assembly drive circuits, the control rod assembly position indicators, the reactor trip circuits, the incore thermocouples, and the reactor vessel head water temperature thermocouples were tested at the time of installation. The tests were repeated on these electrical items before initial operation.

Prior to subsequent refueling operations, the equipment is inspected for operating condition, and certain components, such as the fuel transfer car and manipulator crane, are operated to ensure reliable performance before moving irradiated fuel. Pre-refueling checks are part of a continuing program.

9.12.9 Spent Fuel Storage at the Independent Spent Fuel Storage Installation (ISFSI)

As described in Section 9.12.3.3 and Appendix 9A, spent fuel assemblies are stored in the Surry spent fuel pool to allow post-irradiation cooling of the spent fuel. With construction of the Surry ISFSI, dry storage provides additional capacity for on-site interim storage of spent fuel. The Surry ISFSI is licensed for dry storage systems under 10 CFR 72 (License No. SNM-2501). Surry has also selected the NUHOMS-HD spent fuel storage system under the 10 CFR 72 general license issued to Transnuclear, Inc. (Certificate of Compliance #1030)

Pads 1 and 2 at the ISFSI are designed for vertical, metal dry storage systems, and the NRC, as part of the site license, has approved five storage systems. The design and operation of the ISFSI and the approved storage systems are described in the ISFSI Safety Analysis Report (SAR) (Reference 1) and the storage system Topical Safety Analysis Reports (TSARs) referenced in the SAR. Pad 3 at the ISFSI is designed for storage using the NUHOMS-HD system. The design and operation of this system are described in the NUHOMS FSAR (Reference 2).

Handling of dry storage systems in the Surry Station for loading or unloading must meet the requirements of Appendix 9B.

9.12.9.1 **[Deleted]**

9.12.9.2 **[Deleted]**

9.12.9.3 **[Deleted]**

9.12 REFERENCES

1. *Dry Cask Independent Spent Fuel Storage Installation (ISFSI) Safety Analysis Report.*
2. *Final Safety Analysis Report, Horizontal Modular Storage System for Irradiated Nuclear Fuel (NUHOMS).*

9.12 REFERENCE DRAWINGS

The list of Station Drawings below is provided for information only. The referenced drawings are not part of the UFSAR. This is not intended to be a complete listing of all Station Drawings referenced from this section of the UFSAR. The contents of Station Drawings are controlled by station procedure.

	Drawing Number	Description
1.	11448-FM-1B	Machine Location: Reactor Containment, Elevation 18'- 4"
2.	11448-FM-1E	Machine Location: Reactor Containment; Sections “A-A”, “E-E”, & “Z-Z”
3.	11448-FM-9B	Arrangement: Fuel Building, Sheet 2, Unit 1

Table 9.12-1
FUEL-HANDLING DATA

New fuel storage area (common to both units)	
Core storage capacity	2/3 +20%
Equivalent fuel assemblies	126
Center-to-center spacing of assemblies	21 in.
Maximum k_{eff} possible with unborated water	0.98
Spent fuel storage pool (common to both units)	
Core storage capacity	6-1/3 +30%
Equivalent fuel assemblies	1044
Number of space accommodations for spent fuel casks	1
Center-to-center spacing of assemblies	14 in.
Maximum k_{eff} possible with unborated water	0.95
Miscellaneous details	
Width of refueling canal	3 ft
Wall thickness for spent fuel storage pool	3 to 6 ft
Weight of fuel assembly with control rod assembly (dry)	≈1635 lb
Capacity of each refueling water storage tank	375,000 gal
Minimum contents of each refueling water storage tank for safety injection and spray system operability	350,000 gal
Quantity of water required for refueling	220,000 gal

Figure 9.12-1
FUEL TRANSFER SYSTEM

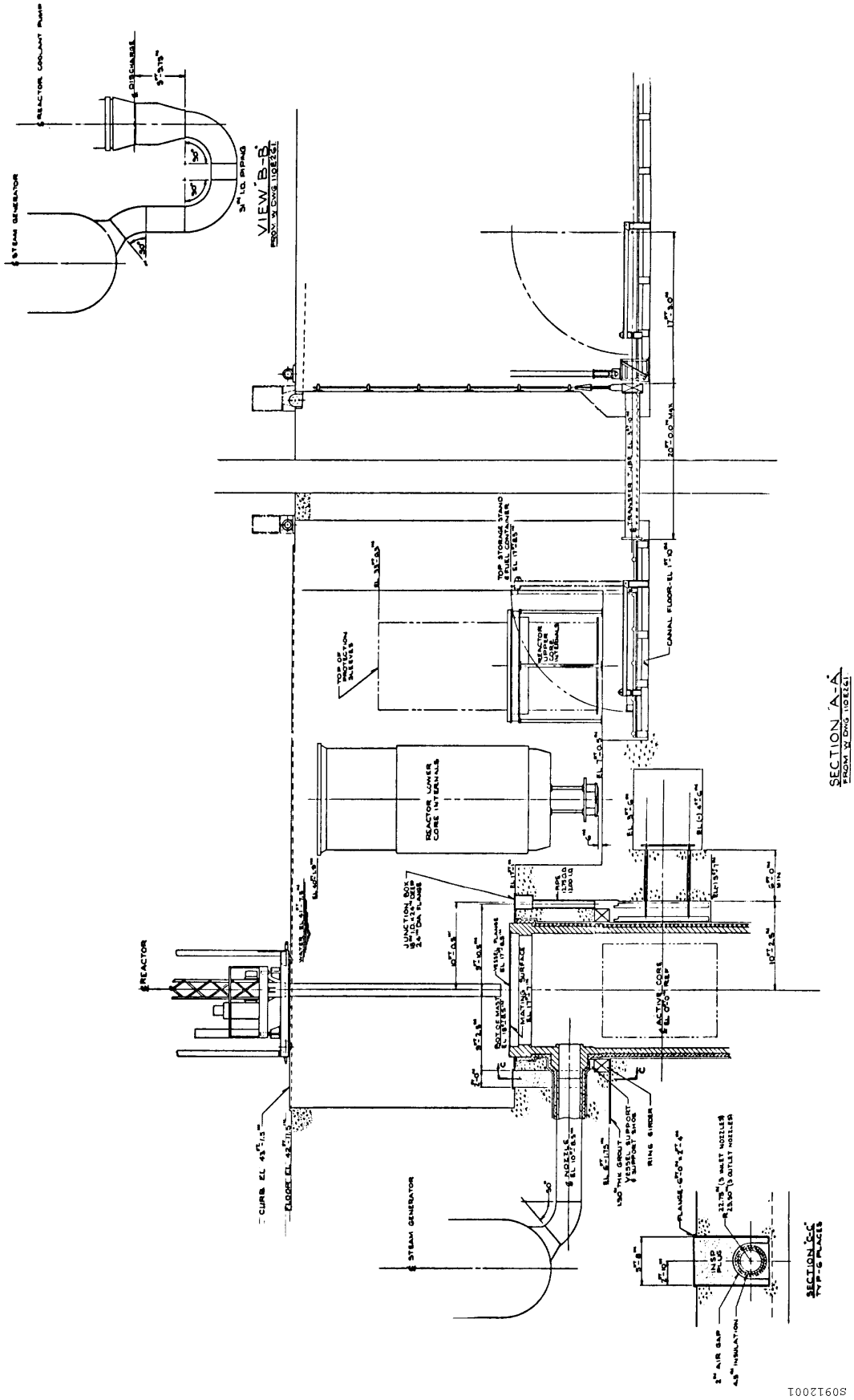

Intentionally Blank

9.13 AUXILIARY VENTILATION SYSTEMS

9.13.1 General Description

The auxiliary ventilation system diagrams are shown on Reference Drawing 5. These include the ventilation and heating systems for the auxiliary building, fuel building, decontamination building, and safeguards areas adjacent to the reactor containments. The cable vault cooling is shown on Reference Drawings 1 and 3. The control and relay room area cooling is shown on Reference Drawing 3. The auxiliary building, fuel building, decontamination building, control room, and ventilation vents are shared by the two units. Individual cable vaults and safeguards areas, and relay rooms, are provided for each unit. The control room and relay rooms for both units are in the service building.

The auxiliary building is a four-level compartmented structure containing the auxiliary nuclear equipment for both units. Equipment handling radioactive fluids is located on the lower three levels, isolated and shielded as required. The upper level is a ventilation equipment room.

Waste gases with a relatively high potential for radioactivity are discharged through filters or the gaseous waste disposal system to the process vent (Section 11.2.5.1). The ventilation exhausts from some primary plant areas are subject to comparatively slight radioactive contamination from such limited sources as pump gland or pipe weepage. The following features are incorporated in these exhaust systems to protect the environment from this relatively remote contamination possibility:

1. For all areas except the auxiliary building central area, two exhaust fans, which provide 100% of the required capacity, are installed in parallel, with an automatic back-flow damper on each fan. One fan will provide approximately 60%-capacity exhaust in the event the other fan fails, or a step flow reduction capacity is desired in the event of radioactive contamination. The auxiliary building central area has two parallel 100%-capacity exhaust fans, also equipped with automatic back-flow dampers.

2. Three iodine filter assemblies, two safety-related and one non-safety-related, are provided. Each filter bank consists of roughing, high efficiency particulate air (HEPA), and charcoal filters. Perforated plate air distribution and straightening sub-plenums are installed in the inlet and outlet plenums of the two safety-related filter housings to provide uniform air flow through the filter housings. The parallel arrangement provides an effective standby filter if one assembly becomes saturated.

3. Two safety-related, high-head fans, sized to draw 36,000 cfm each primarily from emergency core cooling system (ECCS) equipment areas through the safety-related filters, are provided. One non-safety-related, high-head fan, sized to draw the design flow rate of the auxiliary building general area exhaust system through the non-safety-related filter system, is also provided. The capacity of each safety-related high-head fan is 100%. When operating individually, the capacity of each safety-related fan is automatically controlled by electrohydraulically operated inlet valves to draw the design flow rates. When both are

operating, the system configuration limits the flow through each fan to less than 32,400 cfm, even though both inlet valves are full open. In this alignment, the total system flow is greater than the 36,000 cfm required for cooling purposes. The 36,000-cfm ±10% capacity of each filter train equals the maximum design exhaust flow rate from ECCS equipment areas. Each fan has redundant 480V power supplies.

4. Exhaust bypass arrangements allow for selective filtration of any exhaust system. Parallel dampers for each of the safeguards and charging pump exhaust systems provide redundant flow paths to the filters following a loss-of-coolant accident (LOCA). Other exhaust systems have dampers in series to provide redundant closure following a LOCA. All bypass and filter dampers are remote manually operated from the control room as required. In addition, the affected safeguards area and the charging pump ventilation exhaust systems are automatically aligned upon a safety injection signal to ensure flow is diverted to safety related charcoal filters such that airborne radioactivity from the safeguards area and from the exhaust stream from the charging pump cubicles will be removed. The automatic realignment feature for the ventilation system may be defeated as discussed in Section 9.13.4.1. This condition is not expected however, since defeating the automatic realignment is no longer credited in the fuel handling accident analysis, and procedural controls have been established to eliminate operating with automatic alignment defeated. During refueling, the fuel building exhaust may be passed through charcoal filters to ensure radioactivity removal in case of airborne contamination from any source. However, there is no requirement to filter the exhaust since filtration is not credited in the fuel handling accident analysis.

5. Exhaust to the atmosphere is through a common, continuously monitored ventilation vent (ventilation vent no. 2) located on the roof of the auxiliary building. The vent discharges upward with a velocity in excess of 4000 fpm. For details of monitoring equipment and diversion of ventilation control, see Section 11.3.3. A second ventilation vent (ventilation vent no. 1) is located on top of the service building. The gases originating from labs and counting facilities may contain radioactive gases and are monitored just prior to entering this vent stack. The other potentially contaminated inputs entering this vent are the condenser air ejector exhausts. These vent streams are separately monitored.

HVAC systems which are designed primarily to be used only for post accident are in the Technical Support Center (TSC) and Local Emergency Operations Facility (LEOF). Filtration is provided in the post accident modes consistent with the anticipated hazards. The LEOF is backed up by the Central Emergency Operations Facility (CEOF).

The normal HVAC systems which have neither airborne contamination control functions or post accident mitigation functions are not considered available following a loss of offsite power. The system designs range from once through to full recirculation depending on equipment and personnel needs. The design bases are similar to the post accident or airborne contamination systems described in Section 9.13.2.

9.13.2 Design Bases

Outside ambient conditions used for design purposes are 93°F summer dry bulb, 78°F summer wet bulb, 73°F summer dewpoint, 10°F winter dry bulb, 58°F all-year ground temperature, and 15-mph all-year wind velocity.

Normal, full power ventilation is based on limiting the temperature in various locations as follows:

Building	Temperature
Fuel building (with a fuel pool water temperature of 140°F)	105°F maximum, 75°F minimum and 79°F dewpoint
Decontamination building	120°F maximum, 50°F minimum for storage and tank spaces
	105°F maximum, 65°F minimum for work spaces
Safeguards building	120°F maximum in pump cubicles, 50°F minimum
Auxiliary building	120°F maximum, 50°F minimum in nuclear auxiliary equipment cubicles
	105°F maximum, 50°F minimum for the balance of the building and ventilation equipment room
Reactor containment	60°F minimum with purging system in operation
Laundry facility	78°F maximum to 68°F minimum
	80% RH to 10% RH

The use of the high-head fans when the exhaust systems are diverted through the filters ensure that the design space temperatures and purging rates are maintained.

Ventilation for nuclear auxiliary systems is designed on a once-through basis. Supply air is introduced to areas least likely to be contaminated, and then exhausted directly from those with the greatest contamination potential.

The safety-related auxiliary ventilation exhaust filter system is designed to mitigate the release of iodine following a Chapter 14 design basis accident to ensure that both the offsite doses and, in conjunction with the Control Room Air Filtration System, the Control Room doses are maintained within the limits of 10 CFR 50.67. The design of the system provides for (1) uniform air distribution across the prefilter bank within 20% of average velocity, (2) a HEPA filter with 99.5% particulate removal efficiency, (3) charcoal adsorber banks which have less than 1% halogen leakage when tested, and (4) charcoal adsorbers which have a methyl iodide removal efficiency of ≥ 86% when tested in accordance with Technical Specification Surveillance Requirement 4.12.B.7.

The TSC charcoal filter meets the qualifications for a safety-related filter and is tested on the safety-related frequencies.

The non-safety-related filter used to filter frequently contaminated auxiliary building exhaust air has a 99% particulate removal efficiency and a 1% halogen leakage. The air is uniformly distributed within ±20% of the average flow across the face of the filter.

The control room air conditioning is designed to maintain 75±10°F dry bulb during either normal or emergency conditions for personnel comfort except during a turbine building high energy line break (HELB). The emergency switchgear and relay rooms are designed for 80°F dry bulb during normal conditions, and 87°F dry bulb during emergency operations except during a turbine building HELB. Refer to Section 7.7 for equipment qualification information.

The control and relay room area exhaust and replenishment supply ventilation is provided by external systems for normal operations. In an emergency, the control and relay room area is sealed with weather-stripped doors and tight external duct closures. The air conditioning systems will continue to operate normally. Redundant bottled compressed dry air systems are installed to provide fresh breathing air and maintain a positive interior pressure to ensure outward leakage. The bottled air will last approximately 1 hour. Emergency supply fans, taking suction from the turbine building through roughing, particulate, and iodine filters, are provided to continue the supply of breathing air and pressurization indefinitely upon depletion of the bottled air supply.

Air-conditioning and associated auxiliary equipment required to operate during emergency conditions are powered from emergency buses.

The ventilation exhaust from the safeguards areas to ventilation vent no. 2, and ventilation vent no. 2, meet Class I design criteria (Section 15.2). This includes the entire ECCS collection and filtration system and the Units 1 and 2 purge exhaust ducts between the containment purge exhaust isolation valves and the safety-related filters. Air-conditioning and emergency ventilation equipment for the control and relay room area also meet Class I design criteria.

Ventilation system arrangements are shown on Reference Drawings 1 through 4.

9.13.3 System Descriptions

9.13.3.1 Auxiliary Building Ventilation

The auxiliary building is supplied with air by two 31,000-cfm air-handling units. The systems have automatic roll filters for continuous cleaning, and steam coils for winter heating. Under normal operating conditions, three exhaust fans are used: one fan for the central spaces, and two fans for the general area which includes the remainder of the potentially contaminated spaces in the auxiliary building. Airflow from the central spaces is nominally 24,000 cfm and is based on two charging pumps operating. Airflow from the general area is approximately 48,000 cfm. The exhausts with radioactive contamination potential always discharge through ventilation vent no. 2. These exhausts can be diverted remotely through the common filter

subsystems from the control room, as described in Section 9.13.1. Particulate filters are installed in the exhaust branches from the auxiliary building sample cooler spaces for continuous filtration.

The exhaust ducts from the cubicles of the volume control tanks, containment vacuum pumps, sampling coolers and sinks, process vent blower, gaseous waste disposal system, and recombiner are connected to the general area exhaust system. These cubicle exhausts represent non-safety-related cubicle exhausts and are therefore combined with the general area exhaust system. This exhaust is normally exhausted to the atmosphere via the radiologically monitored ventilation vent no. 2, but can be routed through the non-safety-related filter.

The exhaust duct of each charging pump cubicle has a two-position damper installed to open and exhaust air when the pump is operating and to close when the pump stops. The charging pump exhaust system flow rate is nominally 22,000 cfm following a LOCA. This is the major contribution to the design flow rate capability of the safety-related filter system. See Section 9.10.4.8 for discussion on auxiliary building fan cable re-routing to comply with requirements of 10 CFR 50 Appendix R.

Spaces subject to radioactive contamination have exhaust intakes located as far removed from the space access as feasible. The resulting negative pressure draws the makeup air in through the access and sweeps the space with supply air so that airborne contamination from equipment leakage will be drawn inward to the exhaust.

9.13.3.2 **Fuel Building Ventilation**

The ventilation provides heating to 90°F to inhibit the buildup of condensation, high-efficiency filtration to reduce the possibility of clouding the spent-fuel pool, and an excess exhaust flow to maintain a negative pressure in the building for inward leakage. Two supply fans and dual exhaust fans are provided to permit step capacity reduction in case of airborne contamination and to reduce steam requirements for winter heating.

Two supply fans are provided, one of 29,000-cfm capacity serving the spent-fuel pit, and one of 5000-cfm capacity for the remote equipment space at Elevation 6 ft. 10 in. Both take suction from a common plenum fitted with a combination roll and high-efficiency filter (minimum 90% NBS atmospheric dust) and steam coils for space heating. Heating control, both summer and winter, is as follows:

1. 75°F minimum summer and winter inside temperature, 105°F maximum temperature.
2. Vary the temperature difference between inside and outside from 30°F delta T at 45°F outside to 15°F delta T at 75°F outside.
3. Terminate heating at 90°F inside temperature.

Dual exhaust fans of 17,500-cfm capacity each discharge through ventilation vent no. 2. The larger exhaust flow rate (compared to supply flow rate) is to ensure that only inward leakage occurs. This exhaust may be diverted through the common iodine filter bank during refueling. The

exhaust duct from the waste gas compressor cubicle of the fuel building was disconnected from the decontamination building exhaust header and connected to the fuel building exhaust header. Dampers are installed in series to provide redundant closure following a LOCA.

9.13.3.3 **Decontamination Building Ventilation**

The decontamination building is ventilated at approximately 15 air changes per hour, and arranged to maintain a negative pressure for inward leakage.

The supply system incorporates a continuous roll filter, steam coils for space heating, and supply fan. During normal operation, the supply fan is only operated if both exhaust fans are operated. Following a LOCA, the supply fan may continue to operate.

Dual exhaust fans discharge through ventilation vent no. 2 with a remote manual bypass arrangement to discharge through a filter bank, if needed. Dampers are installed in series to provide redundant closure following a LOCA.

9.13.3.4 **Safeguards Area Ventilation**

The safeguards areas are outside of, and adjacent to, each reactor containment structure. They contain the recirculation spray pumps, low-head safety injection pumps, refueling water recirculation pumps, containment spray pumps, and motor control center. These areas have a contamination potential and are exhausted by 6000-cfm-capacity dual fans located in the auxiliary building, which discharge to ventilation vent no. 2. An automatic capability is provided for the recirculation spray pumps, low-head safety injection pumps, and valve operating space areas for particulate and iodine filtration on a safety injection signal. Parallel dampers are installed to provide redundant flow paths to the filters following a LOCA.

Heated supply air is provided for all spaces. The supply system is fitted with continuous roll filters and steam heating coils for cold-weather space heating. The ventilation system is operated with a larger exhaust flow rate than supply flow rate to ensure inward leakage. This is accomplished by not operating the 16,000 cfm supply fan.

The Main Steam Valve House (MSVH) is adjacent to the safeguards area and houses the auxiliary feedwater pumps. The MSVH is not considered a potentially contaminated area and, therefore, this area is exhausted directly to atmosphere. Ventilation is provided by a wall-mounted exhaust fan and by openings in the wall at ground level and in the roof. The space is not heated since the main steam lines within the structure provide sufficient heating.

9.13.3.5 **Service Building Ventilation**

The ventilation for service building spaces subject to possible radioactive contamination is described below.

The hot laboratory, count room, and Health Physics lab are exhausted by two 2325-cfm fans in parallel. The exhaust is continuously drawn through roughing and particulate filters and

discharged through the monitored ventilation vent no. 1. The controlled corridors, decontamination area, and one laboratory fume hood are exhausted by a 4000 cfm fan through roughing and particulate filters. Discharge is to the monitored ventilation vent no. 1.

Ventilation exhausts for the remainder of the service, turbine, and yard buildings are discharged directly to the atmosphere.

9.13.3.6 **Main Control Room and Emergency Switchgear and Relay Room Ventilation**

The air-conditioning equipment for the main control room (MCR) and emergency switchgear and relay room area is located within tornado-protected and missile-protected structures to ensure cooling during both normal and accident conditions.

Each MCR and emergency switchgear and relay room area is air conditioned by one of two air-handling units installed within the space served. The eight AHUs are arranged in two separate chilled water loops (4 AHUs on each loop), and either one or both chilled water loops are operated, as necessary, to maintain space temperatures. With only one loop in operation, one chiller provides chilled water to all operating AHUs. With both loops in service, two chillers provide chilled water separately to each loop, but only two AHUs are operating on each loop. Condensing cooling water is provided by service water lines described in Section 9.9.

Three chillers are located in Mechanical Equipment Room No. 3 (MER-3), and two chillers are located in Mechanical Equipment Room No. 5 (MER-5). This arrangement prevents full loss of cooling in the event of a fire in either MER-3 or MER-5. Three of the five chillers are powered from either of two buses, enabling maximum system flexibility in aligning the chillers as required. Additional equipment includes control panels and isolation switches for affected air handling units and cables routed to provide the required separation. The additional equipment is seismically and environmentally qualified, as applicable. Control of the air conditioning system is remote manual from the control room. An Appendix R power feed is available to power one chiller in MER-5 from MCC 1A2-3 (which can be supplied from the AAC) in the event of an Appendix R fire in Unit 2 Emergency Switchgear Room.

The MCR and emergency switchgear and relay rooms supply and exhaust air is provided by other systems. These systems are balanced to provide a positive pressure within the MCR and emergency switchgear and relay rooms with the boundary doors closed. Tight, redundant, Seismic Category I isolation dampers (remote manually or automatically operated closures in the ducts) and weather-stripped doors permit pressurization of the control room area with bottled compressed air during an accident. Redundant bottled air banks provide a minimum of 33,000 scf each of free air, and each bank is sufficient for approximately 1 hour of pressurization. Emergency ventilation is provided for each space. Emergency ventilation takes suction from the turbine building through roughing particulate filters, high efficiency particulate air (HEPA) filters, and charcoal adsorbers to remove airborne radioactivity. Following a design basis accident, the emergency ventilation system is assumed to operate after 1 hour and prior to the depletion of the bottled air banks. The emergency ventilation system will indefinitely extend control and relay

room area pressurization and the supply of breathing air upon depletion of the bottled compressed air. Control of the emergency ventilation system is remote manual from the control room. Emergency power is supplied for emergency ventilation equipment (Section 8.5). The redundant, seismic Category I isolation dampers in the control room and emergency switchgear relay rooms' area supply and exhaust air ducts close automatically in response to a safety injection signal. Automatic closure of the dampers causes an automatic discharge of the control room bottled air system. On the loss of power, the dampers fail to the closed position, which also initiates a bottled air discharge. The dampers can also be closed by remote manual operation. To minimize MCR Pressure Envelope Inleakage, the non-safety related ventilation fans which serve adjacent spaces to the envelope are automatically stopped upon closure of the isolation dampers. Safety-related pressure differential indicators have been installed in the envelope to verify positive pressure with respect to adjacent spaces.

HEPA filters are installed before the charcoal adsorbers to prevent clogging of the charcoal adsorbers. The charcoal adsorbers are installed to reduce the potential intake of radioiodine to the control room. When performed, the in-place test results should indicate a system leak-tightness of less than 1% bypass leakage for the charcoal adsorbers and particulate removal efficiency of at least 99.5% for the HEPA filters. New charcoal adsorbent for the emergency ventilation is qualified as discussed in Section 9.13.2 for safety-related filters. The adsorbent is replaced every 720 hours of use or following painting, fire, or a chemical challenge while running. The control room dose calculations for the design basis accidents assume a 90% elemental iodine removal efficiency for the air passing through the charcoal filters. For organic iodine removal the control room dose calculations assume a 70% removal efficiency for the fuel handling and loss of coolant accidents and 30% removal efficiency for the rupture of a main steam pipe, steam generator tube rupture, and locked rotor incident accidents (Chapter 14). Therefore, if the efficiencies of the HEPA filters and charcoal adsorbers are demonstrated to be as specified, at flow rates, velocities, and temperatures within the design values of the system, the resulting doses will be less than the allowable levels stated in 10 CFR 50.67.

10 CFR 50 Appendix R requirements and control room fire protection provisions are discussed in Section 9.10.

9.13.3.7 **Auxiliary Ventilation Control Panel and Annunciator**

The auxiliary ventilation control panel (VNTX) and annunciator is located in the control room area. The panel consists of an instrument nest and relay section, and a control indication section.

The control and indicating section contains control switches and indicating lights. The indicating lights are arranged in a mimic display on the panel front, and monitor damper position and ventilation system status and alignment. The control switches are required for filter/unfilter system alignment and to defeat the ventilation system realignment in response to a safety injection signal. Further discussion of defeating the automatic alignment feature of the ventilation system is

in Section 9.13.4.1. This condition is not expected however, since defeating the automatic realignment is no longer credited in the fuel handling accident analysis and procedural controls have been established to eliminate operating with automatic alignment defeated.

Also located on the indicating and control section is the auxiliary ventilation system filtered exhaust fan controls and instrumentation.

The instrumentation includes a vane actuator control station and discharge flow indicator for each fan. This provides the operator with exhaust filter status, capacity control, and flow indication.

9.13.3.8 **Laundry Facility Ventilation**

The laundry facility ventilation is subject to possible radioactive contamination. The combined airborne effluent from the laundry facility (i.e., dryer exhaust, hood exhaust, and HVAC exhaust) is passed through HEPA filters before it exits the facility. The exhaust flow rate is 16,000 cfm. To assure that no unmonitored releases occur, the airborne exhaust, downstream of the HEPA filters is continuously monitored.

9.13.3.9 **TSC Ventilation**

The TSC spaces expected to be occupied are maintained at a positive pressure, post event, by turbine building air drawn through roughing, HEPA, and charcoal filters at a nominal 1000 cfm. The filter automatically starts on an SI signal and the normal air supply and exhaust are double-damper isolated. A positive pressure is maintained in the TSC spaces, as indicated on installed gauges, to ensure that no inleakage occurs.

9.13.3.10 **LOEF Ventilation**

The LOEF may be pressurized with outside air drawn through roughing and HEPA filters. The LEOF is manually activated post event and habitability determined by surveys performed as part of activation. The CEOF will replace the LEOF if necessary.

9.13.4 Design Evaluation

The ventilation systems in areas of potential contamination provide contamination control by ensuring that air is not recirculated, that 10 or more air changes per hour are supplied, and that the air is supplied to the least likely areas to be contaminated for circulation to and exhaust from locations subject to the greatest contamination potential. After being monitored for gaseous and particulate activity, the systems are exhausted through a ventilation stack discharging upward at a velocity in excess of 4000 fpm. A capability is provided for all nuclear auxiliary exhaust systems subject to airborne radioactive contamination to be realigned through roughing, particulate, and activated charcoal filters.

The ventilation system limits summer space temperatures to 105°F in occupied spaces and 120°F in normally unoccupied machinery spaces. Ventilation is based on the heat-producing

equipment operating, and summer space temperatures will be lower whenever such equipment is down for maintenance.

The heating system provides space temperatures sufficient for winter operations and/or the inhibition of condensation in the fuel building and spaces below grade.

The MCR and emergency switchgear and relay rooms' area is completely enclosed in a tornado-proof and missile-proof concrete structure that requires air conditioning for operation. Each of the two redundant air handling units within each area is served by one of two chillers powered from the same power source (normal and emergency).

9.13.4.1 **Incident Control**

The safeguards area and charging pump cubicle exhausts to ventilation vent no. 2 are automatically realigned through the safety related particulate and iodine filters upon a safety injection signal unless the re-alignment is defeated due to the movement of irradiated fuel in the spent fuel pool. This condition is not expected however, since defeating the automatic realignment is no longer credited in the fuel handling accident analysis and procedural controls have been established to eliminate operating with automatic alignment defeated. If re-alignment is not defeated and a safety injection signal is received, the signal produces common pneumatic safety signals that cause the running exhaust fans to trip. Various air-operated and motor operated dampers are automatically repositioned to redirect exhaust flow through the safety related filters. The high capacity, safety related fans are automatically started. Except for the decontamination building, inward leakage is ensured, as the supply fans are shutdown. In the event of leakage from the recirculation spray system, or the low-head and high-head safety injection systems during recirculation mode transfer, airborne radioactivity would be removed from the safeguards area and from the exhaust ventilation stream from the charging pump cubicles by these filters. Ventilation fans and dampers receiving a safety injection signal require operator action to return the component to its non-safety mode upon reset of the safety injection signal.

Defeating the automatic alignment feature requires that, in the event of a LOCA, manual actions are required by the operator to re-enable the automatic alignment of the ventilation system to the safety related filters to process the exhaust from the safeguards area and charging pump cubicles following actions to secure fuel handling activities (Reference 1). Following a safety injection signal, an alarm is received in the MCR after a time delay if the automatic re-alignment is defeated.

During refueling, the fuel building and containment exhaust may be diverted through the two safety-related filter trains. However, there is no requirement to filter the exhaust since filtration is not credited in the fuel handling accident analysis. This will remove airborne particulate radioactivity.

If a high-radiation alarm from the ventilation vent continuous monitor occurs, the control room operator will:

1. Trip any operating supply fans and exhaust fans for:
   a. Auxiliary building central area
   b. Auxiliary building general area
   c. Fuel building
   d. Decontamination building
   e. Unit 1 safeguards
   f. Unit 2 safeguards
2. Locate source of activity by:
   a. Aligning auxiliary building exhaust to nonsafety charcoal filter
   b. Aligning remaining areas to safety-related filter or filters while maintaining filter flows within desired range
3. When the source area is detected, this area remains on filtered exhaust. Additional areas may be filtered as needed to keep filter flow within design range.
4. Request Health Physics to:
   a. Verify area evacuated as necessary,
   b. Control area access as necessary,
   c. Survey area, and
   d. Investigate cause.

The MCR may be isolated as necessary.

There are seven flow streams connectable to the safety related filters. The fuel building and either containment purge may be individually filtered by a single filter train. The volumetric flow may be less than 32,400 cfm but will remain above the fan low flow trip setpoint. The lower flow increases the residence time in the charcoal.

Except as noted above, and in Section 9.13.1, the flow through the safety related filters is procedurally controlled in the design range between 32,400 cfm and 39,600 cfm. Up to three areas may be filtered simultaneously by a single train.

For a discussion of incident control during containment purging or refueling, see Section 5.3.1.3.4.

In the event of a LOCA, the control room and emergency switchgear and relay room's area is sealed off by closing the weather-stripped access doors and the pressure-tight external duct closures at the space boundaries and internal fire barriers. The duct closure is automatic from a safety injection signal or can be closed from the control room by hand switches. The ventilation fans which serve adjacent spaces to the MCR will automatically shutdown to assure the MCR will be at a positive pressure. A handswitch has been provided in the MCR if manual stopping is required. Pressure differential indicators verify area pressurization. The air conditioning will continue to operate normally without change. Outflow of air from the control room will be maintained by area pressurization to approximately 0.05 inch W.G. or greater by breathing-quality air introduced from compressed-air bottles. Upon depletion of the bottled air, in approximately 1 hour, the emergency ventilation will be manually energized to continue pressurization of the control room area. The emergency ventilation is filtered through a roughing filter, a HEPA filter, and iodine adsorbers. All functions can be manually controlled from the control room ventilation control board.

Incipient fires in the control and emergency switchgear and relay room's area will be extinguished with portable equipment. If a fire becomes uncontrollable, the affected space will be isolated by closing the fire doors. The air-conditioning ductwork is self-contained within each space, and the closures in the replenishment air and exhaust ducts fitted at each fire barrier will prevent smoke contamination in adjacent spaces. The motor operated normal supply dampers may be closed should smoke enter the control room from outside the control room area. If the control room becomes untenable because of fire or smoke, the reactor units can be controlled in the hot shutdown mode from their respective auxiliary control areas in the emergency switchgear rooms.

9.13.4.2 **Malfunction Analysis**

To assure that potential contaminated air flows from areas of low potential to high potential, selected supply fans are procedurally controlled to operate only when sufficient air is being exhausted. For example, the larger Fuel Building supply fan cannot be operated unless both unfiltered exhaust fans are running or the building is on filtered exhaust. Exhaust fans whose operation could potentially lead to unmonitored releases are procedurally controlled to preclude operation or abandoned in place.

The total flow is measured in ventilation vent no. 2 and displayed within the MCR. Status lights are also provided in the MCR for each fan connected to the vent. If a fan becomes inoperative, a change will be indicated in the total flow. Where applicable, procedural controls have been established to preclude operating a supply fan when one of a pair of associated exhaust fans is not operating.

Each Unit's MCR and emergency switchgear and relay room is equipped with two 100% capacity air handling units for a total of eight AHUs. The eight AHUs are arranged in two separate chilled water loops (4 AHUs on each loop), and either one or both chilled water loops are operated, as necessary, to maintain space temperatures. With only one loop in operation, one

chiller provides chilled water to all operating AHUs. With both loops in service, two chillers provide chilled water separately to each loop, but only two AHUs are operating on each loop. The air handling units' fans are started from inside the MCR. The MCR and emergency switchgear and relay room air conditioning system includes five 100% capacity chillers.

In the event of a failure of one bank (or train) of bottled compressed air to actuate, the redundant bank of bottled compressed air, which is actuated by the same signal and at the same time, is sufficient for approximately one hour of control room and emergency switchgear and relay rooms' area pressurization. Each of the four emergency ventilation trains is sufficient for pressurization of the MCR and emergency switchgear and relay rooms' area.

9.13.5 Tests and Inspections

The systems are inspected, tested, and balanced upon installation, and tested periodically thereafter. Operating hours are equalized on redundant systems. Particulate and charcoal filters are individually tested by the manufacturer after fabrication and again after installation. Replacement filters are tested in the same manner. Filter banks can be tested for leakage and dioctylphthalate (DOP) smoke test efficiency while in place, and defective cells identified for removal and replacement. Equipment installed for emergency use is tested during installation and operated monthly thereafter to ensure proper functioning.

Individual filter assemblies are periodically tested in accordance with Technical Specifications. In addition, equipment has been installed to allow regular monitoring of the filters. This equipment includes filter differential pressure indication, view ports, inside lights, inside and outside shrouds, and test ports. Not all of the filters contain all of the above monitoring equipment, but most filters can be monitored directly.

The two safety-related filter trains have 18 charcoal canisters installed in parallel with the main adsorber tray banks. The canisters are filled with the same adsorbent as the main adsorber trays and are removable from the outlet plenum for laboratory analysis. Charcoal analysis is to be performed every 720 hours of safety-related filter operation.

9.13 REFERENCES

1. Letter from B. C. Buckley of the NRC to W. L. Stewart of Vepco, dated November 20, 1992 (Serial No. 92-773), *Operation of the Auxiliary Ventilation System.*

9.13 REFERENCE DRAWINGS

The list of Station Drawings below is provided for information only. The referenced drawings are not part of the UFSAR. This is not intended to be a complete listing of all Station Drawings referenced from this section of the UFSAR. The contents of Station Drawings are controlled by station procedure.

	Drawing Number	Description
1.	11448-FB-5A	Arrangement: Primary Plant Systems, Ventilation
2.	11448-FB-5B	Arrangement: Primary Plant Systems, Ventilation, Unit 1
3.	11448-FB-24A	Arrangement: Service Building, Ventilation, Floor Elevations 27'- 0" & 9'- 6", Columns 4 through 19
4.	11448-FB-24B	Arrangement: Service Building; Ventilation; Floor Elevations 42'- 0", 45'- 3", 47'- 0", & 58'- 6"; Columns 2¼ through 13½
5.	11448-FB-006D	Flow/Valve Operating Numbers Diagram: Auxiliary Ventilation System, Units 1 & 2

Table 9.13-1
MAIN CONTROL ROOM AND EMERGENCY SWITCHGEAR AND RELAY ROOM VENTILATION AND AIR CONDITIONING SYSTEMS DESIGN DATA

Service	Number of Units	Unit Capacity, cfm	Static Pressure, in. W.G.	Motor, hp	Refrigeration Capacity, MBh	Filter Type
U1 Control room air conditioning	2	10,000	4.0	10	210	Cartridge
U2 Control room air conditioning	2	12,000	4.0	15	335	Cartridge
Unit 1 relay room air conditioning	2	13,000	6.0	20	635	Cartridge
Unit 2 relay room air conditioning	2	13,000	6.0	20	635	Cartridge
Control and relay room air supply		3000	(Branch from assembly room unit)			Roll
Control and relay room area exhaust	1	3000 [a]	2.5	2	-	-
Control room emergency ventilation	2	1000	4	1.5	0	Charcoal
Unit 1 relay room emergency ventilation	1	1000	4	1.5	0	Charcoal
Unit 2 relay room emergency ventilation	1	1000	4	1.5	0	Charcoal
Control and relay room area compressed dry air system (each bottle bank)	2	33,000 ft^3 free air (minimum)	0.05	--	--	-

a. Operational condition - throttled to maintain control room positive pressure with boundary doors closed.

Figure 9.13-1
VENTILATION ARRANGEMENT: PRIMARY PLANT

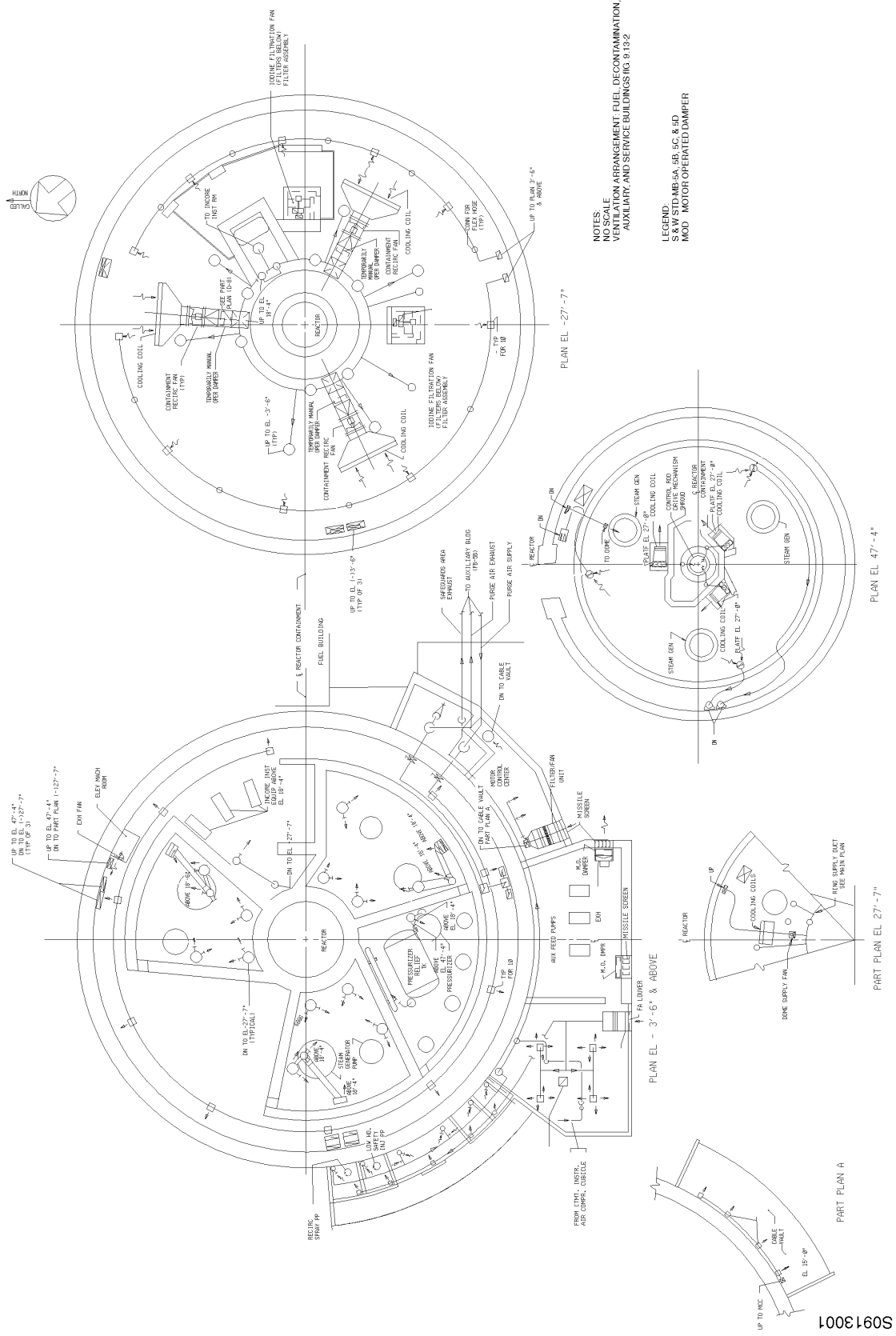

Figure 9.13-2
VENTILATION ARRANGEMENT: FUEL, DECONTAMINATION, AUXILIARY, AND SERVICE BUILDINGS

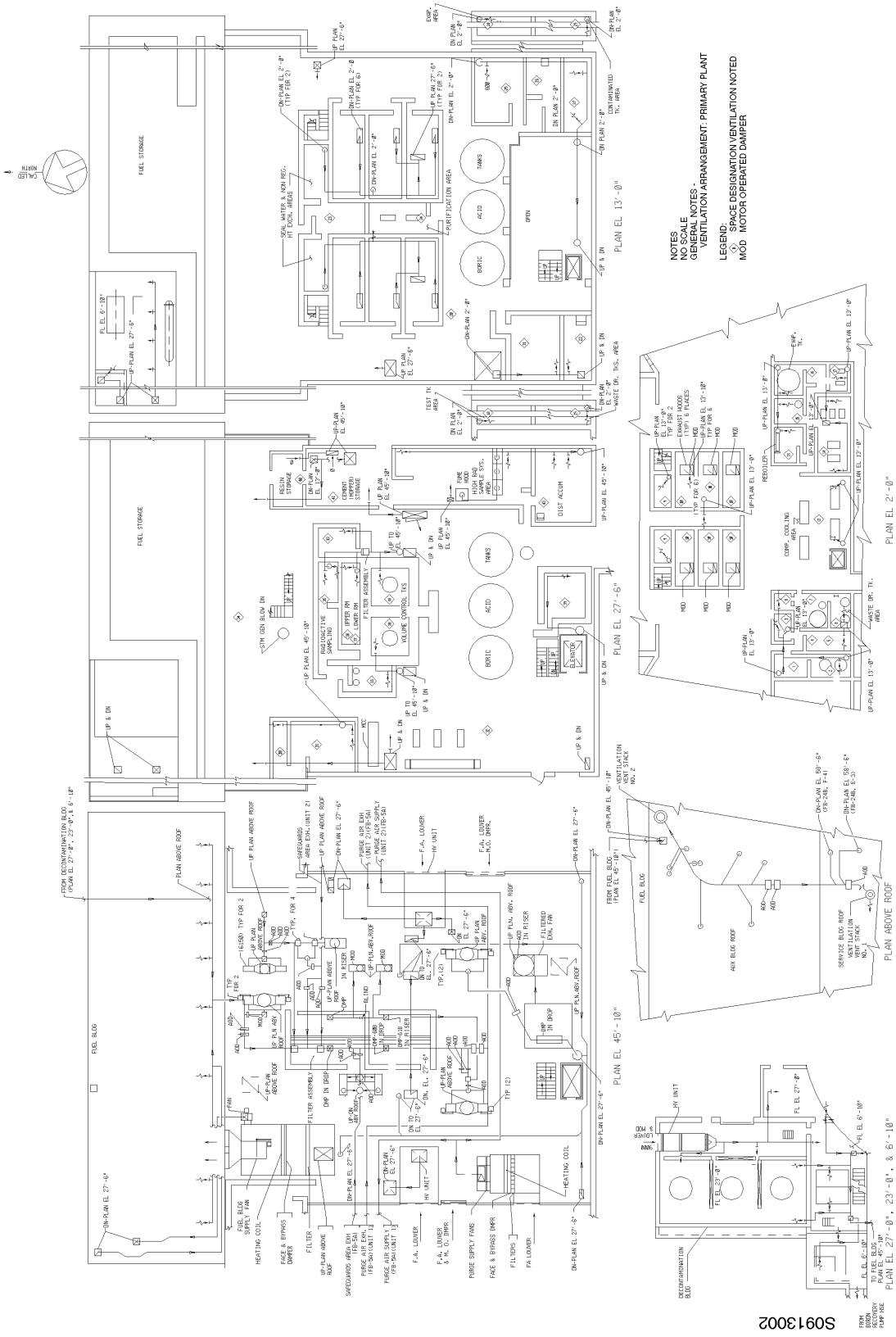

S0913002

Figure 9.13-3
VENTILATION ARRANGEMENT: CONTROL ROOM

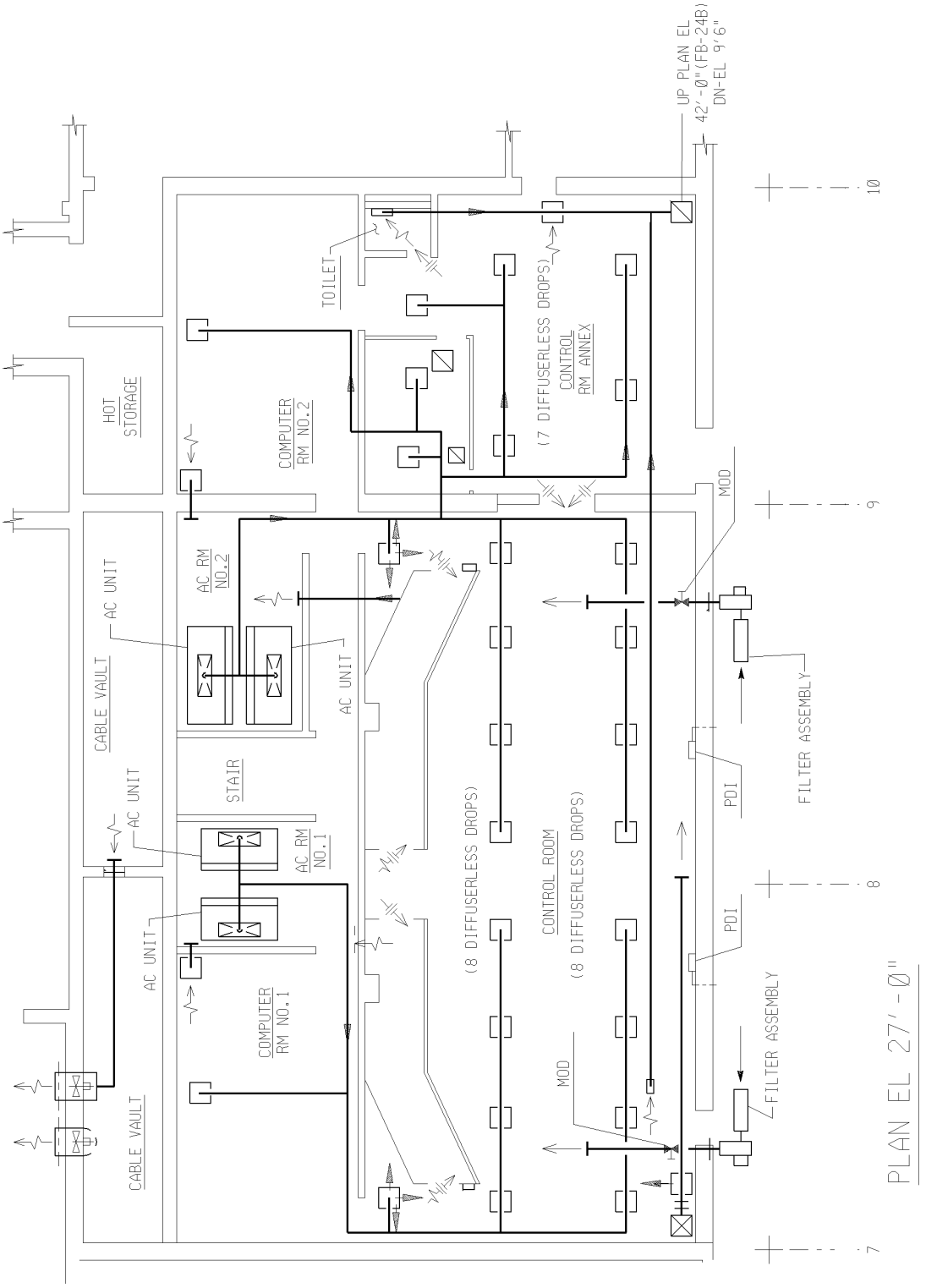

S0913003

9.14 DECONTAMINATION FACILITY

The decontamination facility (Reference Drawing 1) is a poured-concrete and concrete-block structure on the north side of the fuel building, under the fuel cask trolley rails. This location makes it accessible for transporting in and out of the building major items to be decontaminated. Roof hatches and a rolling steel door provide access for equipment.

9.14.1 Design Bases

The facility is designed to provide an area in which equipment can be decontaminated and spent fuel dry storage casks can be prepared for storage without releasing activity to the environment in an uncontrolled manner. Decontamination procedures are specified to reduce surface contamination to a level such that the components can be handled in a safe manner. Certain decontamination activities (such as deconning small tools and equipment) are performed at the Radwaste Facility.

9.14.2 Description

The decontamination building is a poured-concrete and concrete-block building abutting the east end of the fuel building's north wall. A 125-ton trolley runs through a high-bay portion of the building immediately adjacent to the fuel building, and over the roof for the remainder of the decontamination building. Three roof hatches permit casks or other objects to be lowered from the trolley into the building. A tramrail in the building permits the movement of small parts between work areas and tanks with minimum personnel exposure. A T-shaped rolling steel door encloses the high-bay area from the outside when the trolley is not in use. The fuel building and decontamination building are separated by a weathertight structural gap to permit independent motion of the buildings in the event of an earthquake.

Ventilation air is exhausted from the decontamination building through the monitored ventilation vent no. 2. On a high alarm by ventilation vent no. 2 monitors, the decontamination exhaust is remote-manually diverted through charcoal filters as described in Section 9.13. The exhaust capacity is greater than the supply capacity of this system, thus producing a slightly negative pressure in the buildings, so that all air leakage is inwards.

Liquid wastes from decontamination work are piped to the liquid waste disposal system (Section 11.2.4) for processing.

The interior surfaces of the building are covered with suitable materials to permit easy decontamination. A stainless steel pad is provided to protect the floor under heavy objects. Hose connections are provided for compressed air and primary-grade water at each work area. The various decontamination methods provide a flexibility that will give the best decontamination for a specific job, minimize personnel exposure, and limit the release of radioactive material to the environment. Technical information on the equipment provided in the facility is given in Table 9.14-1.

Spent ion exchanger resins can also be processed in the decontamination building via the spent resin catch and blend tanks and their associated transfer pumps. The operation of this equipment and component data are provided in Section 11.2.4.

Final preparations for the spent fuel storage casks takes place in the north bay of the decontamination building. These final preparations consist of decontamination of the external cask surfaces, vacuum drying of the cask interior to remove residual spent fuel pool water, backfilling the cask cavity with helium, placement of the cask secondary lid as applicable, and testing the cask seals for leak-tightness.

To facilitate these preparations, a permanent work platform is installed. The work platform is a two-level platform located in the north bay of the decontamination building. The platform is designed with swing-up sections to facilitate cask entry and to preclude any potentially hazardous openings in the flooring. The cask, which has been loaded with spent fuel assemblies in the spent fuel pool and transferred to the decontamination building via the 125-ton trolley, is lowered into the opening in the work platform.

A piping system is used to remove the Spent Fuel Pool water from the fuel storage Dry Shielded Canister (DSC) prior to vacuum drying. The system is manually operated and consists of a centrifugal DSC Drain Pump, flow indicator, valves and piping routed from the DSC to below the surface of the Spent Fuel Pool water. Additionally, if required, a DSC Reflood Pump is provided to fill the canister with Spent Fuel Pool water. This system consists of a self-priming centrifugal pump, flow indicator, valves and piping routed from below the Spent Fuel Pool water surface to the DSC.

A vacuum drying system is used to remove any residual water from the fuel storage cask before backfilling the cask with helium. The vacuum drying system consists of the parallel vacuum pumps, condenser, drain collection tank, packaged chiller, and the helium/vacuum drying control panel. The vacuum system is connected to the spent fuel storage cask with double ended shut-off quick-connects and flexible hose and is piped through the helium/vacuum drying control panel which controls and monitors the level of vacuum applied to the cask. From the control panel, the vacuum system is piped to the vacuum pump which provides the source of vacuum for the system. The vacuum pumps along with the helium/vacuum drying control are located on the top level of the work platform (Elevation 37 ft. 0 in.).

The discharge from the vacuum pumps is piped to the decontamination building ventilation system. This ventilation system monitors the air discharged from the decontamination area for radioactive contamination and has the equipment available for removing radioactive contaminants from the air steam, should the need arise.

The helium system is made up of a helium bottle rack containing eight helium bottles, and is located in the crane enclosure. From this bottle manifold, helium is piped to the helium/vacuum drying panel located on the upper elevation (Elevation 37 ft. 0 in.) of the work platform. The helium pressure is regulated and monitored as it passes through the control panel. From the

control panel, the helium is piped to the quick-connect station which is located near the cask. The flexible hoses are used to connect the helium/vacuum drying system to the cask connect at this quick-connect station.

9.14.3 Design Evaluation

The facility provides a contained area with all discharges controlled to prevent the inadvertent release of activity to the environment.

In the event of leakage from piping or equipment, areas of the building are provided with sumps to which fluids will drain. The sumps discharge to the liquid waste disposal system. Airborne particulate matter is retained within the building because of the slightly subatmospheric pressure, and is discharged in a controlled manner through the monitored ventilation vent no. 2.

9.14.4 Tests And Inspections

Periodic tests are conducted on the radiation detection equipment in the ventilation system.

Operating equipment and storage tanks are subjected to periodic visual inspections.

9.14 REFERENCE DRAWINGS

The list of Station Drawings below is provided for information only. The referenced drawings are not part of the UFSAR. This is not intended to be a complete listing of all Station Drawings referenced from this section of the UFSAR. The contents of Station Drawings are controlled by station procedure.

	Drawing Number	Description
1.	11448-FM-10B	Arrangement: Decontamination Building, Sheet 1

Table 9.14-1
DECONTAMINATION FACILITY COMPONENT DATA[a]

Spent Fuel Storage Cask Vacuum Pump	
Number	2
Type	Rotary Vane
Motor horsepower	5 hp
Seal type	Oil Seal
Displacement	71 cfm
Ultimate Partial Pressure	≤ 0.4 Torr
Nominal Rotational Speed	1800 rpm
Cooling System	Air Cooled
Spent Fuel Storage Cask Condenser	
Number	1
Type	U-Tube Removable Bundle
Materials	
Tubes and Tubesheets	Stainless Steel
Shell and Heads	Carbon Steel
Design code	ASME VIII TEMA R
Spent Fuel Storage Cask Packaged Chiller	
Number	1
Type	Packaged Unit
Design Ambient Temperature	100°F
Capacity	63,000 Btu/hr
Chilled Water Temperature	50°F
Chilled Water Temperature Rise	10°F
Chilled Water Flow Rate	12.6 gpm
DSC Drain Pump	
Number	1
Type	Centrifugal, Canned Motor Pump
Motor Horsepower	3
Seal Type	Sealless
Capacity	25 gpm
Total Dynamic Head	52 feet
Rotating Speed	1750 rpm

a. Spent resin processing components' data are provided in Section 11.2.

Table 9.14-1
DECONTAMINATION FACILITY COMPONENT DATA[a]

DSC Reflood Pump	
Number	1
Type	Centrifugal, Self-priming, Magnetic Drive
Motor Horse Power	2
Seal Type	Sealless
Capacity	30 gpm
Total Dynamic Head	54 feet
Rotating Speed	3550 rpm

Intentionally Blank

Appendix 9A
High-Density Spent-Fuel Storage Rack Design

Intentionally Blank

Appendix 9A: High-Density Spent-Fuel Storage Rack Design

Table of Contents

Section	Title	Page
9A.1	DESIGN BASES	9A-1
9A.2	STORAGE RACK DESCRIPTION	9A-1
9A.3	STORAGE RACK EVALUATION	9A-3
9A.3.1	Structural and Seismic Analysis	9A-3
9A.3.1.1	Applicable Codes, Standards, and Specifications	9A-4
9A.3.1.2	Loads and Load Combinations	9A-5
9A.3.1.3	Design and Analysis Methods	9A-6
9A.3.1.4	Structural Acceptance Criteria	9A-8
9A.3.1.5	Results of Analysis	9A-8
9A.3.2	Nuclear Analysis	9A-9
9A.3.2.1	Design Criteria and Assumptions	9A-10
9A.3.2.2	Configurations Analyzed	9A-10
9A.3.2.3	Calculational Methods	9A-11
9A.3.2.4	Analysis Results	9A-13
9A	References	9A-16

Appendix 9A: High-Density Spent-Fuel Storage Rack Design

List of Tables

Table	Title	Page
Table 9A-1	Combined Stress Summary (Fuel Racks)	9A-17
Table 9A-2	Summary of Stresses (ksi)	9A-18
Table 9A-3	Results of Tolerance Calculations for Normal Spent Fuel Rack Configuration	9A-19

Appendix 9A: High-Density Spent-Fuel Storage Rack Design

List of Figures

Figure	Title	Page
Figure 9A-1	Spent Fuel Racks	9A-20
Figure 9A-2	Fuel Pool Stress Point Locations for Table 9A-2	9A-21

Intentionally Blank

Appendix 9A
HIGH-DENSITY SPENT-FUEL STORAGE RACK DESIGN

9A.1 DESIGN BASES

The high-density spent-fuel storage racks are designed to provide vertical storage locations for up to 1044 irradiated fuel assemblies, including insert components, in a borated water pool (with a boron concentration not less than 2300 ppm). The racks are designed to maintain the stored fuel, having maximum initial uranium enrichment of 4.3 weight percent U-235 in UO_2, in a safe, coolable, and subcritical configuration under all conditions.

The reinforced concrete structure and steel superstructure of the Fuel Building and spent fuel storage racks are designed to withstand Design Basis Earthquake loadings as Class 1 structures. The spent fuel pool has a stainless steel liner to protect against loss of water.

The spent fuel pool is divided into a two-region storage pool. Region 1 includes the first three rows of fuel racks (324 storage locations) adjacent to the Fuel Building Trolley Load Block. Region 2 contains the remainder of the fuel racks in the fuel pool. During spent fuel cask handling, Region 1 is limited to storage of spent fuel assemblies which have decayed at least 150 days after discharge and will be restricted to those assemblies in the “acceptable” domain as described in Technical Specification 5.4.

9A.2 STORAGE RACK DESCRIPTION

The spent fuel pool is a seismic Category I structure. Its primary function is to store spent fuel assemblies. The spent fuel pool is a 72 ft. 6 in. long, 29 ft. 3 in. wide and 40 ft. 6 in. deep reinforced concrete structure resting on a pile foundation. The floor and walls of the pool are nominally 6 feet thick. The pool is lined with 0.25-inch thick stainless steel liner plate. The spent fuel cask loading area (12 ft x 12 ft) is located at the northeast end of the pool. The floor of the cask loading area is 2 ft. 6 in. lower than the pool floor. The cask pad sits in this area.

Each fuel storage rack consists of a 6 x 6 array of fuel storage cells, which are square stainless steel boxes spaced nominally 14 inches on centers. The rack is shown on the general arrangement drawing, Figure 9A-1.

The fuel storage rack has two basic components: the support structure and the fuel storage cell. The support structure consists primarily of the four corner storage cells, which interface with the spent-fuel pool floor pads, and two horizontal grid members, which are supported by the four corner cells and which maintain the horizontal position and vertical alignment of the remaining 32 (inner) storage cells. The inner storage cells rest directly on the spent-fuel pool floor. Diagonal bracing is provided on the structure to accommodate the loads imposed by rack installation, by fuel handling, and by seismic events.

Horizontal seismic loads are transmitted from the rack structure to the spent-fuel pool floor through restraint devices that capture the existing spent-fuel pool floor pads and mate with the fuel rack structure corner cells. The restraint devices also permit leveling of the fuel racks, and require no modification of the existing fuel rack support pad. The vertical seismic loads are essentially transmitted directly to the pool floor by each storage cell. No bracing to the pool wall is required to support the racks during a seismic event. The racks, however, are connected to each other at the top grid to preclude potential uplift.

Each corner storage cell is nominally 9.56 inches by 9.56 inches (o.d.) by approximately 172 inches long, with 0.250-inch walls. Each of the 32 inner storage cells is nominally 9.12 inches by 9.12 inches (o.d.) by approximately 170 inches long, with 0.090-inch walls. The cells are flared at the top to aid in insertion of the fuel assembly into the cell. Attached to the bottom of each cell are four stainless steel posts that support the fuel assembly. The posts attached to the 32 inner cells rest directly on the floor of the spent-fuel pool and space the cells off the pool floor a sufficient distance to ensure adequate area for cooling flow. To accommodate any unlevelness in the pool floor liner, the rack is designed to permit the inner cells to move vertically within the rack structure (a ±1-inch motion is provided). The inner cells, however, are positively locked into the support structure so that they cannot be inadvertently lifted out of the rack.

The corner cells rest on adapter plates. The adapter plates are keyed to the existing rack stops, and the corners of the fuel storage cells are keyed to the adapter plates through 1-5/8-inch-diameter restraint pins. For installation purposes, a nominal clearance of 1/16 inch is provided all around between the restraint pin hole in the corner storage cells and the restraint pin, and between the clearance cutouts in the adapter plates and the existing rack stops. The clearance also provides sufficient allowance for thermal expansion. Horizontal seismic loads are transmitted from the rack structure to the existing rack stops at each corner of the rack through the adapter plates and pins. The racks cannot slide during any design-basis seismic event.

There is no interference between the spent-fuel storage racks and the gates and tools in storage within the pool. All of the equipment stored within the fuel pool, except the refueling canal gates, weighs less than a fuel assembly. Therefore, any possible interaction between these tools and the fuel racks would be less severe than interaction between a fuel assembly and the spent-fuel storage racks, which has been analyzed. The refueling canal gates, however, weigh approximately 3200 lb, which is more than a fuel assembly. These gates are stored so as to be captured at both the top and the bottom, making interaction between the gate and the spent-fuel storage racks very unlikely.

The rack grids maintain the horizontal position of the inner cells relative to each other and the corner cells so that impact between inner cells and/or corner cells is not possible. Each grid consists of welded 4 inches by 1.5 inches by 3/16 inch channels forming square openings in which the inner cells are placed. The grids are welded to the top and bottom ends of the heavy wall (0.25-inch thick) corner storage cells to form the basic rack structure. Diagonal bracing

welded to the corner storage cells completes the rack structure and provides the lateral and torsional rigidity to accommodate seismic and installation loads.

At each grid elevation, four angle clips capture the corners of each inner cell. These clips are welded to the channel members of each grid to maintain pitch and vertical plumbness. A slight clearance is provided between the clips and the cells (1/64-inch maximum for each clip) to facilitate fabrication and to permit vertical movement of the inner cells. Such vertical movement does not introduce any stresses/deformations in the rack structure or the inner storage cells, since each inner cell can move freely past the grid retaining clips to sit directly on the pool floor. The design permits the vertical loads for each inner cell to be transmitted to the pool floor. It is necessary to limit the vertical travel of the inner storage cells to prevent (1) removal of a cell during fuel-handling operations (e.g., stuck fuel assembly load case) and (2) a cell dropping out of the rack during rack installation/removal. Mechanical stops welded to each inner cell limit the total vertical travel to about 2 inches (±1 inch). These stops will support the weight of the fuel cell plus a fuel assembly if necessary.

A fuel assembly guard structure is provided to prevent a fuel assembly from being brought up against the side of the peripheral fuel racks wherever the space between the fuel racks and the fuel pool walls is sufficient to insert an assembly. The structure is a 4 inches by 2 inches by 3/16 inch angle welded to the outside channel of the upper grid. With this structure in place it will not be possible to move a fuel assembly closer than approximately 8 inches to stored fuel, thereby maintaining a pitch in excess of 17 inches for this condition. The guard structures are required on the east and west sides of the storage rack array, and on the two racks adjacent to the Unit 2 refueling canal. The space between the fuel racks and the north or south walls is not sufficient to insert a fuel assembly.

9A.3 STORAGE RACK EVALUATION

9A.3.1 Structural and Seismic Analysis

The high-density fuel storage racks are designed to meet the requirements for Seismic Class I structures. Detailed structural and seismic analyses of the high-density storage racks have been performed to verify the adequacy of the design to withstand the loadings encountered during installation, normal operation, the severe and extreme environmental conditions of the operating-basis and safe-shutdown earthquakes, and the abnormal loading condition of an accidental fuel-assembly-drop event.

The ground acceleration values in Section 2.5 were used to generate the amplified response spectra used in the design of the spent-fuel racks. A dynamic model representing the fuel building structure and the subgrade was prepared. This model was used to calculate amplified response spectra (ARS) due to the specified earthquake. Amplified response spectra were generated for both the safe-shutdown earthquake and the operational-basis earthquake (one-half of the safe-shutdown earthquake) at the mat surface, the top of the concrete structure, and the roof of the

steel superstructure. The response spectra of the design earthquakes used are consistent with the requirements set forth by NRC Regulatory Guide 1.60, and the damping levels are from NRC Regulatory Guide 1.61.

The dynamic analysis was performed for a range of subgrade properties to account for uncertainties in soil parameters. The amplified response spectra provided are the result of enveloping the response spectra obtained from these analyses. They also include the design ground response spectrum.

The various load combinations considered in the design of the high-density fuel storage racks and the allowable stress values for these load combinations are given in Tables 9A-1 and 9A-2, respectively. The yield stress value for stainless steel used in calculating the section strength for all the load combinations was taken as 30.0 ksi.

9A.3.1.1 **Applicable Codes, Standards, and Specifications**

The applicable codes, standards, and specifications used in the design, fabrication, inspection, installation, and evaluation of the high-density fuel storage racks are given below.

1. Design: A.I.S.C. Manual of Steel Construction, Seventh Edition, 1970.
2. Fabrication:
   a. ASME Code, Section VIII.
   b. ASME Code, Section IX, Welding and Brazing Qualifications.
3. Inspection: ASME Code, Section V, Nondestructive Examination.
4. Installation:
   a. ASME Code, Section VIII, Appendix 9.
   b. ASME Code, Section IX.
5. Evaluation:
   a. USNRC Regulatory Guide 1.60, *Design Response Spectra for Seismic Design of Nuclear Power Plants*, December 1973.
   b. USNRC Regulatory Guide 1.61, *Damping Values for Seismic Design of Nuclear Power Plants*, October 1973.
   c. USNRC Regulatory Guide 1.92, *Combination of Modes and Spatial Components in Seismic Response Analysis*, Revision 1, February 1976.

9A.3.1.2 **Loads and Load Combinations**

The following load cases were considered in the analysis, in accordance with the requirements of USNRC Standard Review Plan, Section 3.8.4, *Other Seismic Category 1 Structures*.

1. Dead weight of rack plus corner fuel assemblies, D + L (normal load) - Under normal operating conditions, the rack is subjected to the dead weight loading of the rack structure itself plus the loads resulting from four fuel assemblies stored in the four structural corner cells. The loads resulting from the individual storage cells and contained fuel assemblies are not considered, since these transmit their load directly to the pool floor and not through the structure.

2. Dead weight of rack and storage cells, D + I.L. (normal load) - During installation, the rack is subjected to the loading resulting from its own structural weight plus the weight of the empty storage cells.

3. Operating-basis earthquake, E (severe environmental load) - The rack, fuel assemblies, and virtual water mass react to the simultaneous loading of the horizontal and vertical components of the seismic response acceleration spectra specified for the operating-basis earthquake in the Surry 1 and 2 seismic design specifications. The seismic loading is applied to two storage conditions: a fully loaded rack, and a partially loaded rack with 21 assemblies.

4. Safe-shutdown earthquake, E' (extreme environmental load) - Same as Load Case 2, except the seismic response acceleration spectra corresponding to the safe-shutdown earthquake were used in the analysis.

5. Uplifting load, U.L. (abnormal load) - The possibility of a fuel assembly becoming jammed in a fuel storage cell during fuel handling was considered. The uplift force considered for this load case is the maximum force that can be applied by the fuel-handling bridge fuel hoist (4000 lb) less the weight of the jammed fuel assembly and the fuel storage cell (combined weight is 1650 lb). The uplift force used in the analysis (2400 lb) is very conservative, since the fuel hoist has a load-limit cell set at 2000 lb. With such a load-limit device, the net uplift force would be about 350 lb. No credit was taken for operation of the load-limit cell.

6. Assembly drop impact load, F.I. (abnormal load) - The possibility of dropping a fuel assembly on the rack from the highest possible elevation during spent-fuel handling was considered. A 2000-lb weight was postulated to drop on the rack from a height of 42 inches.

For the service load cases described above, the following load combinations were considered, using elastic working stress design methods of the AISC:

D + L (Load Case la)

D + I.L. (Load Case lb)

D + L + E (Load Case 2)

For the factored load cases described above, the following load combinations are considered, using elastic working stress design methods of the AISC:

D + L + E' (Load Case 3)

D + U.L. (Load Case 4)

D + F.I. (Load Case 5)

9A.3.1.3 **Design and Analysis Methods**

9A.3.1.3.1 Static Analysis

The response of the rack structure to specified static loading conditions was evaluated by means of linear-elastic analysis using the finite element method. The rack was mathematically modeled as a three-dimensional finite element structure consisting of discrete three-dimensional elastic beams and plates. Six degrees of freedom (three translations and three rotations) were permitted at each nodal point. Appropriate boundary conditions were assumed for each load case.

9A.3.1.3.2 Dynamic Analyses

The response of the rack structure to specified seismic loading conditions was evaluated by mathematically modeling the storage rack as a lumped mass, multi-degree-of-freedom system. The fuel storage rack structure has been mathematically modeled as a three-dimensional finite element structure consisting of discrete three-dimensional elastic beam and plate elements interconnected at a finite number of nodal points. Masses were lumped so as to represent the dynamic characteristics of the storage racks. The eigenvalues and eigenvectors (frequency and mode shapes of vibration) of the lumped mass model were calculated using the Householder-QR technique.

The seismic response analyses were then performed using response spectrum modal superposition methods of dynamic analysis, using the Surry amplified response spectra and appropriate damping for welded steel structures. The damping values used in the seismic analysis of the high-density fuel storage racks are 4% for the operating-basis earthquake and 6% for the safe-shutdown earthquake. NRC Regulatory Guide 1.61 permits damping values of 2% for the operating-basis earthquake and 4% for the safe-shutdown earthquake for welded steel structures functioning in air. These damping values are increased by 2%, since the fuel storage racks are welded stainless steel structures completely submerged in water. This 2% increase in damping value for submerged structures is based on Section 6.4 of *Fundamentals of Earthquake Engineering* by N. M. Newmark and E. Rosenblueth.

The fuel storage rack (6 x 6 array of fuel storage cells) consists of upper and lower grid structures connected to each other by means of four corner cells and diagonal bracing members. The fuel storage rack thus structurally becomes equivalent to a box-shaped structure which is inherently strong in torsion. The torsional effects due to possible nonuniform mass distribution was considered by analyzing the partially loaded rack.

Individual modal responses of the system were combined in accordance with Section 1.2.1 of Regulatory Guide 1.92. The maximum responses of the system for each of the three orthogonal spatial components (two horizontal and one vertical) of an earthquake were combined on a square root of the sum of the square (SRSS) basis (Regulatory Guide 1.92).

The sloshing effects of water on the fuel racks were evaluated using the analytical methods given in the ASCEs *Structural Analysis and Design of Nuclear Plant Facilities*. The "rattling" effects of the fuel inside the cell were accounted for by increasing the seismic inertia loads produced by the impacting masses by applying an impact factor of two, and adding the resulting loading to the seismic inertial loading produced by the non-impacting masses.

The masses considered in the seismic analysis include the fuel assembly weight, the storage cell weight, structural member weight, and tributary water mass. Of these masses, only the fuel assembly will produce impact. The fuel assembly will only impact the fuel storage cell at the top of the fuel assembly, since the fuel assembly will pivot on the bottom support pads. Therefore, the impact factor of two was applied to the seismic inertial loads produced by the upper half of the fuel assembly weight, resulting in an equivalent factor of 1.4 when the seismic inertia loads due to the total cell weight were considered. The equivalent loading (1.4 times the seismic inertia loads to account for fuel assembly impact effects) was considered for local effects as well as overall effects on the structural members of the rack, the rack/floor pad connection plates, and the floor pads.

The static, seismic, and stress analyses for the fuel storage racks were performed utilizing the STARDYNE computer code.

The fuel assembly drop load case (Load Case 5) was compared to the results from the refueling canal gate drop analysis. The results are discussed in Section 9A.3.1.5.

9A.3.1.3.3 Thermal Growth

The maximum thermal growth of the fuel storage racks would be 0.11 inch for a fuel pool bulk water temperature change from 70°F to 210°F. Sufficient clearance between the fuel storage rack and the pool floor support pads (0.125 inch minimum) has been provided to eliminate any potential interference between the rack and the support pads caused by thermal expansion. The installation approach permits those clearances to be achieved during wet installation of the Surry fuel racks. Since there will not be any interferences between the rack and its support points, the stresses and reaction loads due to thermal loadings would be insignificant. Furthermore, there will not be any local stresses due to thermal gradients across the fuel storage rack structural members, since significant increases in pool water bulk temperature occur very gradually (a change from 70°F to 210°F would take approximately 20 hours).

9A.3.1.4 **Structural Acceptance Criteria**

The following allowable limits constitute the structural acceptance criteria used for load cases 1 through 4 presented in Section 9A.3.1.2:

Load Combinations	Limit
1a and 1b	S
2	S
3	1.6S
4	1.6S

where S is the required section strength based on the elastic design methods and the allowable stresses defined in Part 1 of the AISC *Specification for the Design, Fabrication and Erection of Structural Steel for Buildings*, February 12, 1969.

9A.3.1.5 **Results of Analysis**

The results of the static structural analysis for load combinations 1 and 4 show that the deflections and stresses in the various structural members of the fuel storage rack are nominal and less than the applicable acceptance criteria.

The results of the seismic structural analyses for load combinations 2 and 3 show that the maximum stresses and deflections in the rack are nominal and within the allowable values. The maximum calculated stress is 8.3 ksi, which occurs in an upper grid member of the structure. The fundamental frequency of vibration of the fuel storage rack is 9.5 cps.

The results of the analysis for load case 5 indicate that the drop of a fuel assembly onto a fuel storage cell is bounded by the analysis of a drop of the refueling canal gate onto the fuel storage racks. Any buckling of the cells as a result of a fuel assembly drop would be limited to the top flared region of the cells. The predicted strains in the cells are not sufficient to alter the storage rack geometry after being subjected to a fuel assembly drop from 42 inches. Therefore, there will be no effect on k_{eff} of fuel stored in the rack as a result of a fuel assembly drop.

It could not be concluded directly from this analysis that perforation of the quarter-inch stainless steel spent fuel pool liner would not occur as a result of a fuel assembly drop. In the event that the liner is perforated as a result of a fuel assembly drop, the leak rate from the pool would be less than the makeup capability to the pool and fuel stored in the racks would not be uncovered as a result. Perforation of the spent fuel pool liner is addressed in the discussion of the Fuel Cask Trolley in Section 9.12.4.13.

The seismic and structural analysis shows that the deflections and/or stresses in the rack structure resulting from the various loadings meet the deflection and stress acceptance criteria for Seismic Class I structures.

The maximum stress values are given in Table 9A-1 for load combinations 1 through 4.

A summary of stresses of the supporting pool structure is provided in Table 9A-2.

The following load combinations were considered:

1. Hydrostatic + dead load + live load.
2. Hydrostatic + dead load + live load + operating-basis earthquake.
3. Hydrostatic + dead load + live load + safe-shutdown earthquake.
4. Hydrostatic + dead load + live load + high-density racks.

The allowable stresses are based on the minimum sampled coupon strength of 43,600 psi and the acceptance criteria stated in ACI 318-63. It should be noted that with the new high-density fuel storage racks, the mat loadings are lower than those originally calculated. This is due to the different analytical model used. For the high-density fuel storage rack loadings, the model accounted for the detailed location of both the pilings and the fuel rack embedments in the mat. This resulted in a significant portion of the load due to spent fuel being transmitted to the pilings without inducing mat bending. In the analysis for the original loading, the rack loads were spread uniformly over the mat, and the pilings were lumped at discrete locations that were further apart than the actual pile spacing. The method used to calculate the mat loadings from the new high-density fuel storage racks represents the as-built condition at Surry.

As given in Section 9.5, the spent-fuel pool temperature will be maintained at or below the original limits of 140°F (normal case) and 170°F (abnormal case). Therefore, the maximum temperature of the thermal gradient in the pool walls and the base slab as originally designed will not be exceeded.

9A.3.2 Nuclear Analysis

A detailed nuclear analysis was performed to demonstrate that for all anticipated normal and abnormal configurations of fuel assemblies within the fuel storage racks, the k_{eff} of the system is substantially subcritical ($k_{eff} < 0.95$). Certain conservative assumptions about the fuel assemblies and racks were used in the calculations. These assumptions are described in Section 9A.3.2.1.

The reference configuration which is the basis of the criticality calculations consists of an array of square stainless steel boxes (9.12 inches o.d. with a wall thickness of 0.090 inch) spaced 14.0 inches on centers with fuel assemblies centrally located within the boxes. Variations from this reference configuration were also studied and included the effects of dimensional and spacing variations, fuel enrichment changes, water temperature increases and mislocations of fuel

assemblies and boxes. A description of the calculational method and codes is presented in Section 9A.3.2.3, and the results of the criticality analysis are presented in Section 9A.3.2.4.

The analysis of the Surry spent fuel racks followed the methodology described in Reference 9 and approved by the NRC in Reference 10. Differences between this approved methodology and the Surry analysis are described in Section 9A.3.2.3.1. Criticality calculations were performed using BONAMI and NITAWL-II codes for cross section generation, and the KENO-V.a Monte Carlo code for reactivity determination. Sensitivity calculations for normal and abnormal conditions were performed using the Westinghouse PHOENIX-P code.

9A.3.2.1 **Design Criteria and Assumptions**

The criticality design criterion established for the Surry Power Station spent-fuel racks is that the multiplication constant (k_{eff}) shall be less than 0.95 for all normal and abnormal configurations, as confirmed by transport theory.

The following conservative assumptions were used in the criticality calculations performed to verify the adequacy of the rack design with respect to the rack design criteria:

1. The pool water has no soluble poison.
2. The fuel assemblies have no burnable poison.
3. The fuel is fresh and of a specified nominal enrichment as high or higher than that of any fuel available.
4. No credit is taken for structural material other than the fuel can.
5. All fuel cans are assumed to be 0.090 inches thick, the minimum allowable thickness.

9A.3.2.2 **Configurations Analyzed**

The various configurations of fuel within racks that are possible are classed as either normal or abnormal configurations. Normal configurations result from the placement of fuel within racks and the variation in rack dimensions permitted in fabrication. Abnormal configurations are typically the results of accidents or malfunctions such as seismic events, malfunction of the fuel pool cooling system, etc.

9A.3.2.2.1 Normal Configurations

The normal configurations analyzed were: a reference configuration consists of an infinite array of storage cells having nominal dimensions each containing a 15 x 15 Westinghouse fuel assembly of nominal 4.25 weight percent enrichment positioned centrally within the cell. The 15 x 15 designed fuel assemblies were selected for reference configuration because racks with the 15 x 15 fuel assemblies are slightly more reactive than the rack with the 17 x 17 designed fuel assemblies with equal enrichment. The storage cells are 9.12 inches in outside dimensions, have 0.090-inch walls, and are spaced 14.0 inches on centers. The spent fuel pool water is assumed to be 170°F, which is the upper bound of normal operating temperatures. The effects of variations in

material characteristics and physical dimensions are statistically incorporated into the k_{eff} for the spent fuel storage racks.

9A.3.2.2.2 Abnormal Configurations

Two types of accidents can typically occur in the spent fuel rack which can cause reactivity to increase. The first accident type involves a pool water temperature change, which involves an increase or decrease in the spent fuel pool water temperature and density. The second accident type involves a fuel assembly misplacement, where restrictions on location, enrichment, or burnup are not satisfied. Fuel assembly misplacement accidents include a fuel assembly drop on top of a rack, and a fuel assembly drop between rack modules or between a rack module and the spent fuel pool wall. It is also possible for a dropped fuel assembly to enter a box cleanly and impact directly on the fuel stored in the box. The effect of this type of fuel drop incident was considered from a criticality viewpoint in the initial evaluation for the high density fuel racks (Reference 3) by assuming that the stored assembly would be compressed axially. A calculation based on axial compression of 2 feet yielded a 0.06 decrease in k_{inf} of the fuel cell. Therefore, this type of fuel misplacement accident would reduce k_{eff} and was not considered further.

For Surry, a fuel storage cask handling accident was also evaluated. This accident scenario assumes a fuel storage cask rotates and falls against the fuel storage racks next to the cask loading area. To evaluate this accident, the spent fuel pool is divided into two regions. Region 1 comprises the first three rows of fuel storage racks (324 locations) adjacent to the fuel building trolley load block, which is susceptible to the storage cask handling accident. The remainder of the Surry spent fuel pool (Region 2) is unaffected by this accident.

The seismic impact on criticality calculations was also considered in the initial evaluation for the high density fuel racks. These analyses indicated that the maximum rack structure deflections will be very small (less than 0.120 inches). These deflections have a negligible effect on k_{eff} since they do not change the center-to-center spacing between the storage cells or boxes significantly. The maximum deflection of the storage cells or boxes due to a seismic event occurs at the middle of the box and is less than 0.050 inches. The effect of box deflections on k_{eff} is negligible since the average center-to-center spacing between cells or boxes will not change appreciably if the boxes deflect independently in random directions or act together in a single direction. As the seismic contributions were determined to be negligible, the effect of this type of abnormal condition on the criticality calculations was not considered further.

9A.3.2.3 **Calculational Methods**

9A.3.2.3.1 Analytical Methods

The design method which insures that a subcritical condition is maintained in the spent fuel storage racks is similar to the NRC-approved Westinghouse Owners Group (WOG) methodology,

which is described in References 9 and 10. The analysis of the Surry spent fuel pool incorporated the following exceptions to the WOG methodology:

1. The WOG methodology assumed a nominal UO_2 density of 95.0% T.D. The Surry spent fuel pool analysis used a nominal UO_2 density of 95.5% T.D., based on actual as-built fuel assembly uranium-loading information for Surry
2. The WOG methodology assumed a UO_2 density variation of ±2.0% T.D. about the nominal reference density, and variation in the fuel pellet dishing fraction from 0% to twice the nominal pellet dishing fraction. The analysis for the Surry spent fuel pool assumed a ±1.5% T.D. variation in fuel pellet density, based on the fuel manufacturing specifications and as-built fuel assembly uranium-loading information.
3. The WOG methodology used 227 group ENDF/B-V cross sections. These cross sections have not been made available to Virginia Power by Oak Ridge National Laboratory. Therefore, the Surry spent fuel pool analysis used 238 group ENDF/B-V cross sections, which have been extensively benchmarked.
4. The Surry spent fuel pool analysis does not require any boron credit. Therefore, the WOG boron credit methodology is not applicable.
5. The WOG methodology uses a nominal temperature of 68°F and pressure of 14.7 psia. In the analysis for the Surry spent fuel pool, the nominal temperature was set to the most conservative value over the typical temperature range, which was determined to be 170°F. The nominal pressure was set to 28 psia to account for the effects of the spent fuel pool water depth.
6. Although the NRC-approved WOG methodology does not require consideration of the effect of the axial burnup distribution on fuel assembly reactivity, an axial burnup gradient reactivity bias was applied to the evaluation of the Surry spent fuel pool.
7. The WOG methodology includes B^{10} self-shielding bias for spent fuel pools with poison panels. The Surry spent fuel storage cells do not include any poison panels, so this bias is not necessary in the Surry analysis. In addition, the Surry reactivity and tolerance calculations do not account for any poison panels

The design method uses the BONAMI and NITAWL-II codes for cross section generation, and the KENO-V.a code for reactivity determination. The 238-group ENDF/B-V cross section library is the starting point for all cross sections used for the KENO-V.a calculations. BONAMI (Reference 4) performs a resonance self-shielding calculation based on the Bondarenko method, and produces problem dependent master data sets. NITAWL-II (Reference 5) performs problem dependent resonance shielding calculations by applying the Nordheim Integral Treatment. These multigroup cross section sets are then used as input to KENO-V.a, which is a three dimensional Monte Carlo theory program designed for reactivity calculations (Reference 8). KENO-V.a calculations are always performed with sufficient neutron histories to assure convergence.

Two different KENO-V.a models were used. One model represented an infinitely reflected single spent fuel storage cell, while the other model represented the entire Surry spent fuel storage pool. The storage cells in the full pool model are placed in arrays to model each fuel storage rack, which are placed in their appropriate fuel pool location along with the fuel transfer canal and concrete buttress. This configuration is then surrounded with the stainless steel liner and concrete walls and floor.

9A.3.2.3.2 Benchmark Calculations

In order to establish the accuracy of the computer codes used for this analysis, the KENO-V.a code and cross sections were compared to critical experiment data for fuel assemblies similar to those for which the Surry spent fuel racks were designed. These benchmarking data, which represents fifty-nine validation criticality test cases for UO_2 lattices, are sufficiently diverse to establish that the method bias and uncertainty will apply to the rack conditions covered by this analysis.

The benchmark critical experiments resulted in an average KENO-V.a k_{eff} of 0.99643, which compared to a critical k_{eff} of 1.0 gives a KENO-V.a model bias of 0.00357 Δk. On a 95% confidence level, there is a 95% probability that the uncertainty in reactivity due to the method is not greater than 0.00099 Δk.

Reactivity equivalencing and tolerance calculations were performed using the Westinghouse PHOENIX-P code. The benchmarking performed for the WOG methodology covers a range of lattice parameters and configurations encompassing present fuel storage configurations. Based on the NRC acceptance of PHOENIX-P and their approval of the WOG methodology described in Reference 9, further benchmarking was not performed for the Surry spent fuel pool analysis.

9A.3.2.4 **Analysis Results**

9A.3.2.4.1 Normal Configurations

KENO-V.a calculations were performed for the reference configuration using both the infinitely reflected single storage cell model and the full spent fuel pool model. It was determined that use of the single storage cell KENO-V.a model is slightly conservative for this analysis. The k_{eff} for the single storage cell model was. 0.92950.

The effects of possible variations in material characteristics and mechanical/construction dimensions on spent fuel pool reactivity were performed using Westinghouse's PHOENIX-P code. These calculations included the effects of:

1. Fuel enrichment tolerance.
2. Variation in UO_2 density.
3. Variation of the fuel pellet dishing fraction.

4. Tolerance about the nominal reference storage cell inner dimension.
5. Tolerance about the nominal storage cell center-to-center pitch.
6. Tolerance about the nominal reference storage cell material thickness.
7. Asymmetric positioning of fuel assemblies within the storage cells.

The impact of each of these factors on the calculated k_{eff} is given in Table 9A-3. The total uncertainty associated with material characteristics, mechanical construction, and the KENO-V.a methodology is determined by statistically combining the effects of these tolerances with the calculational uncertainty. The combined uncertainty is 0.01064, as shown in Table 9A-3.

The 95/95 k_{eff} for the Surry spent fuel storage racks was then derived from:

$$k_{eff} = k_{nominal} + B_{method} + B_{temp} + B_{uncert}$$

where:

$k_{nominal}$ = nominal conditions KENO-V.a k_{eff} (0.92950)

B_{method} = method bias determined from benchmark critical comparisons (0.00357)

B_{temp} = temperature bias (0.0)

B_{uncert} = uncertainty associated with material characteristics, mechanical construction, and KENO-V.a method (0.01064)

The resulting spent fuel pool k_{eff} is 0.94371.

9A.3.2.4.2 Abnormal Configurations

As discussed in Section 9A.3.2.2, one type of accident which can cause reactivity to increase in the spent fuel rack involves an increase or decrease in the spent fuel pool water temperature and density. The normal conditions analysis, which covered a normal temperature range from 50°F to 170°F, showed that k_{eff} is less than 0.95 with no boron present in the spent fuel pool. The double contingency principle of ANSI/ANS 8.1-1983 states that protection against a criticality accident does not require assumption of two unlikely, independent, concurrent events. The presence of soluble boron in the spent fuel pool storage water can therefore be assumed as a realistic initial condition, since the lack of boron in the pool would be the result of a second unlikely event (i.e., a boron dilution accident). It was determined that an increase in pool temperature from 170°F to 246.4°F, the temperature at which boiling would be expected to occur in the spent fuel pool, increases the spent fuel pool k_{eff} less than the worth of the boron normally present in the spent fuel pool. Therefore, the 0.95 k_{eff} limit will be met for a pool water temperature increase.

The second type of accident which can affect reactivity in the spent fuel pool involves the placement of a fuel assembly into a position for which any restrictions on location, enrichment, or burnup are not satisfied. The normal conditions evaluation assumed a spent fuel storage rack configuration containing all fresh fuel at the maximum permissible proposed Surry fuel enrichment, with no restrictions on assembly location. Therefore, fuel assembly misplacement under normal handling conditions is already bounded by the reference non-accident analysis.

Two additional fuel assembly misplacement accidents that were considered were determined to have no impact on reactivity. These accidents include a fuel assembly drop on top of a rack, and a fuel assembly drop between rack modules or between a rack module and the spent fuel pool wall. A fuel assembly which drops onto the top of the fuel racks will impact the flared tops of the fuel storage rack cells. While minor deformation of the flared tops may occur, the close proximity of the upper grid structure to the impact point will preclude significant lateral displacement of the storage cells, so the rack structure pertinent for criticality control is not excessively deformed by the fuel assembly. KENO-V.a sensitivity cases confirmed that a dropped assembly which comes to rest either horizontally or vertically on top of the rack has sufficient water separating it from the active fuel height of stored assemblies to preclude neutron interaction, so the effect on k_{eff} is negligible. For the second scenario, PHOENIX-P sensitivity cases showed that placing an assembly outside of the racks per the second accident scenario is bounded by the normal conditions analysis.

To ensure that the spent fuel pool k_{eff} remains less than or equal to 0.95 during a fuel storage cask handling accident, limitations must be placed on the initial enrichment and burnup of the fuel assemblies which may be stored in Region 1 of the Surry spent fuel pool.

To evaluate the impact of a storage cask handling accident on spent fuel pool criticality, the deformed fuel and the associated storage racks were assumed to be at the optimum pitch. KENO-V.a calculations were run to determine the maximum fresh fuel enrichment that meets the 0.95 k_{eff} limit, including all applicable uncertainties and tolerances. The same methodology employed for the 95/95 k_{eff} calculations for the normal configurations was used for these calculations. It was determined that any fuel with an initial U^{235} enrichment less or equal to 1.9 weight percent may be loaded into Region 1 of the Surry spent fuel pool.

To allow the loading of fuel with higher initial enrichments in Region 1 of the Surry spent fuel pool, credit must be taken for the fuel burnup. A series of reactivity calculations were performed using the PHOENIX-P code and following the methodology outlined in Reference 9 to identify fuel assembly initial enrichment-discharge burnup pairs, which all yield equivalent k_{eff} values for the Surry spent fuel storage racks. These burnup credit cases incorporated the following conservatisms and uncertainties:

1. Fuel depletions were performed at a conservatively high boron concentration to enhance the predicted buildup of plutonium.
2. Burnup credit cases assumed no xenon.

3. A PHOENIX-P code uncertainty was applied.
4. An axial burnup gradient reactivity bias was applied.
5. A reactivity bias was applied to account for changes in optimum pitch due to burnup and enrichment changes.
6. An uncertainty was also applied to assembly burnup to reflect uncertainties in burnup measurements.

The results of these burnup credit reactivity equivalencing calculations were used to define a curve of assembly burnup versus initial fuel enrichment, which is included in the Surry Technical Specifications as Figure 5.4-1. Use of fuel with a burnup and enrichment combination which falls above this curve in Region 1 of the Surry spent fuel pool ensures that the spent fuel pool k_{eff} remains less than or equal to 0.95 during a fuel storage handling accident.

9A REFERENCES

1. Letter from C. M. Stallings (Vepco) to E. G. Case (NRC), *Request for Technical Specification Change No. 53, Surry Power Station Units 1 and 2*, dated May 1977
2. Letter from J. D. Neighbors (NRC) to W. L. Stewart (Virginia Power), Approval of Technical Specifications 84 and 85, dated March 1983.
3. Nuclear Energy Services, Inc., *Nuclear Design Analysis Report For The Surry Nuclear Power Station High Density Fuel Storage Racks*, NES-81A0494, dated March 1980.
4. N. M. Greene, *BONAMI: Resonance Self-Shielding by the Bondarenko Method,* ORNL/NUREG/CSD-2/V2/R5, Section F1, March 1997.
5. N. M. Greene, et al., *NITAWL-II: SCALE System Module for Performing Resonance Shielding and Working Library Production,* ORNL/NUREG/CSD-2/V2/R5, Section F2, March 1997.
6. Report No. 320-3254, ISB/GGC3, IBM Scientific Center, Palo Alto, California.
7. R. J. Weader, NES 81A0260, *Criticality Analysis of the Atcor Vendenburgh Cask*, February 1975.
8. L. M. Petrie and N. F. Landers, *KENO-V.a: An Improved Monte Carlo Criticality Program with Supergrouping,* ORNL/NUREG/CSD-2/V1/R2, Section F11, March 1997.
9. W. D. Newmyer, *Westinghouse Spent Fuel Rack Criticality Analysis Methodology,* WCAP-14416-P, June 1995.
10. Letter from T. E. Collins (NRC) to Tom Greene (Westinghouse), *Acceptance for Referencing of Licensing Topical Report WCAP-14416-P, "*Westinghouse Spent Fuel Rack Criticality Analysis Methodology*",* TAC No. M93254, October 25, 1996.

Table 9A-1
COMBINED STRESS SUMMARY (FUEL RACKS)

Load Combination	Element No./Type	Combined Stress (ksi)[a] Calculated	Allowable	Combined[b] Stress Ratio
D + L	74/Beam	1.70	18.5	-
	158/Beam	1.78	18.5	-
	48/Plate	1.17	16.8	-
D + I.L.	77/Beam	15.52	18.5	-
	48/Plate	1.24	6.8	-
D + L + E (fully loaded rack)	2/Beam	5.56	-	0.32
	74/Beam	6.85	-	0.54
	158/Beam	5.18	-	0.36
	164/Beam	4.97	-	0.29
	48/Plate	9.17	16.8	-
D + L + E' (fully loaded rack)	2/Beam	9.66	-	0.35
	74/Beam	10.51	-	0.59
	158/Beam	7.67	-	0.37
	164/Beam	8.51	-	0.32
	48/Plate	16.22	26.9	-
D + U.L.	70/154/Beams	16.93	29.6	-
	53/Plate	0.85	26.9	-

a. Maximum total stress $P/A + M_2C_3 + M_3C_2$ for beams. Maximum von Mises for plates. Allowable stresses are flexural for beams and tensile for plates.

b. Combined axial compression plus bending stress requirement for AISC Specification Section.

Table 9A-2
SUMMARY OF STRESSES (ksi)

Location	Hydrostatic + Dead + Live	Hydrostatic + Dead + Live + OBE	Hydrostatic + Dead + Live + SSE	Hydrostatic + Dead + High-Density Racks
4A	21.4	27.8	34.1	-
4B	21.4	26.7	32.0	-
4C	20.7	25.1	29.5	-
4E	18.1	23.6	29.1	-
3A	20.9	27.1	33.3	17.7
3B	19.8	24.8	29.8	14.9
3D	19.8	25.2	30.7	17.5
3E	21.4	27.8	34.1	20.9
2A	19.0	-	-	-
2E	21.7	-	-	20.9
Allowable stress	f_s 21.8	4/3 f_s 29.0	0.9 f_y 39.0	f_s 21.8

Allowable stress based on minimum coupon strength sample.

$f_y = 43.6$ ksi $f_s = 0.5\ f_y$

Note: Columns 1, 2, and 3 are the original loads in the fuel building structure, and column 4 shows the change with the addition of the high-density spent-fuel racks.

Table 9A-3
RESULTS OF TOLERANCE CALCULATIONS
FOR NORMAL SPENT FUEL RACK CONFIGURATION

Tolerance	Δk
Enrichment (+0.05 wt.%)	0.00247
Density (+1.5% TD)	0.00284
Dishing Fraction (0%)	0.00234
Cell Pitch (-1/4 in.)	0.00823
Cell Wall Thickness (-0.005 in.)	0.00196
Cell i.d. (-1/16 in.)	0.00005
Assembly Position	0.00439
Calculational Uncertainty	0.00130
Methodology Uncertainty	0.00099
Total Uncertainty (B_{uncert})	0.01064

The total uncertainty (B_{uncert}) was determined by statistically summing each uncertainty component.

$$B_{uncert} = \sqrt{\sum_i Unc_i^2}$$

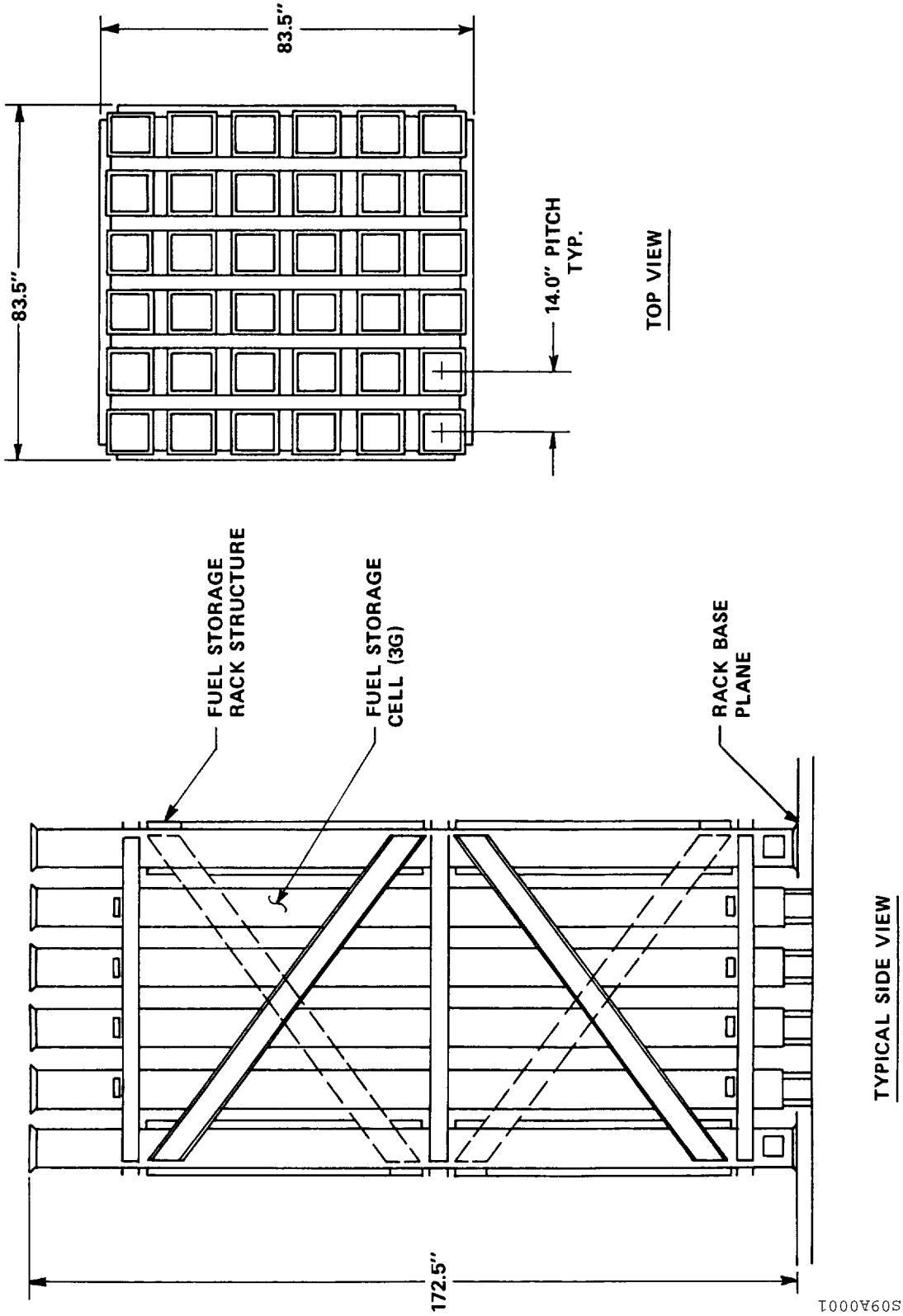

Figure 9A-1
SPENT FUEL RACKS

Figure 9A-2
FUEL POOL STRESS POINT LOCATIONS FOR TABLE 9A-2

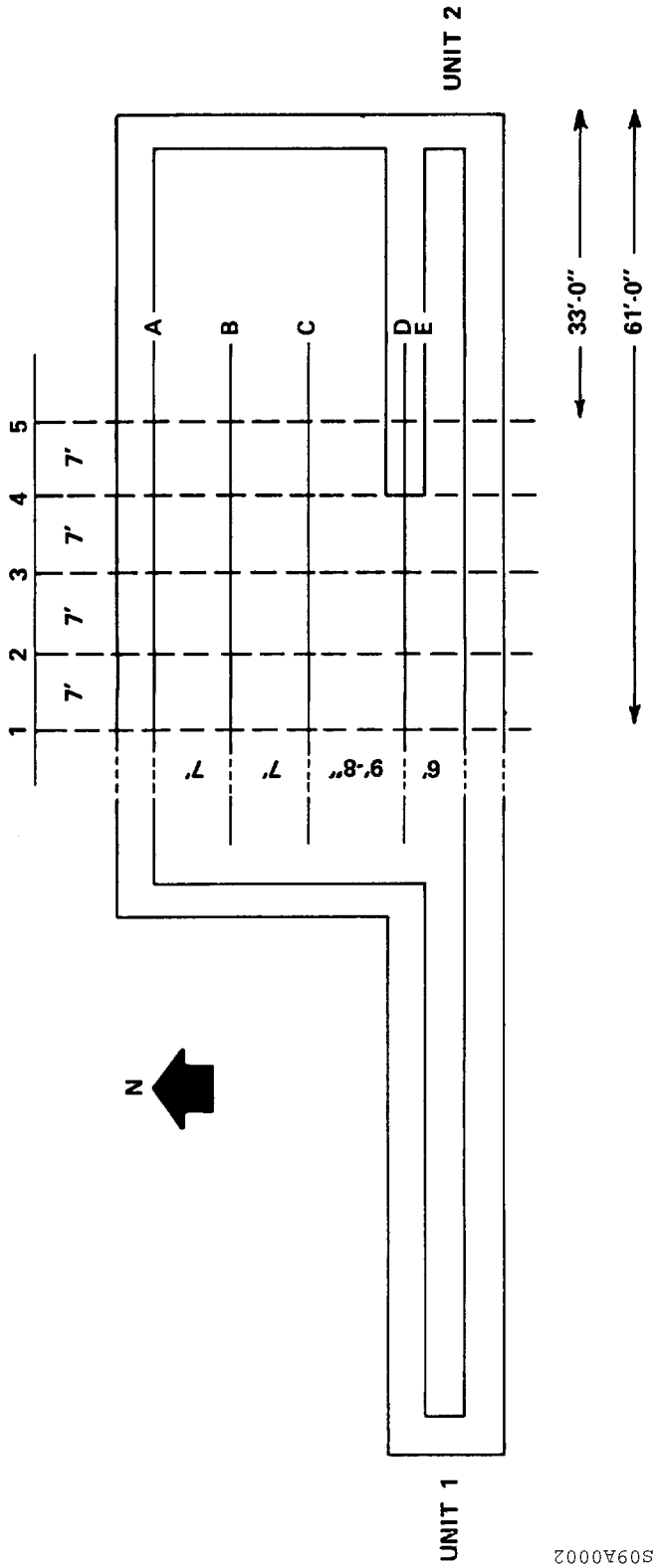

Intentionally Blank

Appendix 9B
Movement of Heavy Loads

Intentionally Blank

Appendix 9B: Movement of Heavy Loads

Table of Contents

Section	Title	Page
9B.1	Heavy Loads Over Spent Fuel	9B-1
9B.1.1	Reactor Vessel Head	9B-1
9B.1.2	Reactor Vessel Upper Internals	9B-1
9B.1.3	Reactor Irradiation Sample Shipping Casks	9B-2
9B.1.4	Fuel Transfer Canal Door	9B-2
9B.1.5	Spent Fuel Casks	9B-2
9B.1	References	9B-4
9B.2	Heavy Loads Over Safe-Shutdown Equipment	9B-5
9B.2.1	Introduction/Background	9B-5
9B.2.2	Heavy Loads	9B-6
9B.2.3	Overhead Heavy Load Handling Systems	9B-6
9B.2.4	NUREG-0612, Section 5.1.1 Guidelines	9B-7
9B.2.4.1	Safe Load Paths	9B-7
9B.2.4.2	Load Handling Procedures	9B-7
9B.2.4.3	Crane Operators Training	9B-8
9B.2.4.4	Special Lifting Devices	9B-8
9B.2.4.5	Lifting Devices Not Specially Designed (Slings)	9B-10
9B.2.4.6	Cranes (Inspection, Testing, and Maintenance)	9B-11
9B.2.4.7	Crane Design	9B-11
9B.2.5	Technical Specifications (TS)	9B-12
9B.2	References	9B-13
9B	Reference Drawings	9B-17

Appendix 9B: Movement of Heavy Loads

List of Tables

Table Title Page

Table 9B.2-1 Heavy Loads 9B-14

Appendix 9B
MOVEMENT OF HEAVY LOADS

9B.1 HEAVY LOADS OVER SPENT FUEL

This section describes the movement of heavy loads over the reactor core or the spent fuel storage pool. A fuel assembly is not defined as a heavy load, and the movement of fuel assemblies is not controlled under NUREG-0612.

NUREG-0612, *Control of Heavy Loads at Nuclear Power Plants,* (Reference 1) defines a heavy load as a load greater than the combined weight of a single fuel assembly and its handling tool. A fuel assembly weighs approximately 1470 lb and the spent fuel handling tool weighs approximately 350 lb, therefore, this heavy load definition is:

Fuel Assembly	1470
Handling Tool	+ 350
	1820

During refueling operations, a heavy load is defined as 110% of the weight of a fuel assembly (not including the fuel handling tool). This heavy load weight definition is:

Fuel Assembly	1470
110%	× 1.1
	1617

Using a single value that bounds both of these definitions, a heavy load subject to NUREG-0612 controls is a load greater than 1600 lb.

9B.1.1 Reactor Vessel Head

The reactor vessel head is lifted by the containment polar crane. Its movement path includes a vertical lift from the reactor vessel, a horizontal movement, and a vertical descent to the head storage area in the basement. The head is returned to the reactor vessel using the reverse sequence. The containment equipment locations can be seen on Reference Drawings 1 and 3. The size and shape of the head are shown on Reference Drawing 3. The weight of the head and lifting device is provided in Table 9B.2-1.

9B.1.2 Reactor Vessel Upper Internals

The reactor vessel upper internals are removed from the reactor vessel by the containment polar crane and are placed in the upper internals lifting rig storage stand. This involves a vertical lift from the reactor vessel, a horizontal movement, and a vertical descent to the storage stand. The upper internals are returned to the vessel using the reverse sequence. The weight of the upper

internals and lifting rig is provided in Table 9B.2-1. The upper internals are described in Chapter 3.

9B.1.3 Reactor Irradiation Sample Shipping Casks

In accordance with the reactor vessel radiation surveillance program, reactor irradiation sample assemblies are removed from the reactor vessel at intervals as specified in Section 4.1.7. The sample assemblies are removed from the reactor vessel and transferred to the spent fuel storage pool in a sample basket. The samples are then shipped to a contractor laboratory in a shipping cask. Several shipping cask designs can be used, and these casks weigh from approximately 8000 lb to approximately 23,000 lb. These casks may be loaded without placing them in, or moving them over, the spent fuel storage pool. If a cask is loaded in, or moved over, the spent fuel storage pool, an evaluation must be performed to ensure that cask drop analyses remain bounding.

9B.1.4 Fuel Transfer Canal Door

At the end of each fuel transfer canal in the spent fuel storage pool, a door is used to isolate the canal, if needed. These doors are marked “Gate” on Reference Drawing 4. The dry weight of the transfer canal door is approximately 3200 lb. Prior to refueling, the transfer canal door is removed from the canal and moved to a storage position on the side of the spent fuel storage pool. The door is also removed on a periodic basis to perform seal maintenance. Administrative controls are imposed for moving the transfer canal door over fuel assemblies. The controls limit the lift height of the door and prohibit spider-mounted insert components in fuel assemblies in the load path while the door is being moved. These restrictions ensure that fuel assemblies will not be impacted if the transfer canal door were to drop during movement.

9B.1.5 Spent Fuel Casks

Spent fuel cask drop evaluations have been conducted in support of loading and unloading spent fuel casks in the fuel building. The results of these evaluations, and the request for a license amendment to permit movement of spent fuel casks in the fuel building are provided in References 2 and 3. As part of these evaluations, two cask impact pads have been installed in the cask loading area of the spent fuel storage pool. These pads are designed to protect the floor of the spent fuel storage pool from damage in the event a spent fuel cask is dropped from the fuel cask trolley. Fuel assemblies stored in the first three rows of storage racks adjacent to the cask loading area must have decayed at least 150 days after discharge from the reactor, and must also meet the requirements for burnup and enrichment. These requirements ensure that the radiological consequences are bounded by the consequences for a fuel handling accident, and prevent fuel criticality in the event of a cask drop and tip onto the storage racks. A description of the fuel cask trolley and its operation is provided in Section 9.12.4.13.

License amendments permit the movement of spent fuel casks into the fuel building (Reference 4). Cask drop evaluations of the TN-2100 and GNS-5 casks are included in the license amendments. The license amendments concluded the following:

1. The spent fuel storage pool will not be damaged by a worst-case cask drop, and even if the pool liner should be punctured, no significant leakage is expected since the pool walls would not experience through-cracking.
2. Fuel assemblies in the spent fuel storage pool remain sub-critical if storage racks are damaged by a cask drop and tip, and the radiological consequences are well within the guidelines of 10 CFR 100.
3. Damage to spent fuel storage pool piping would not cause the pool to drain. It also confirmed that there are no safe shutdown systems under the travel path of the fuel building trolley.

Subsequent safety evaluations conclude that the cask drop evaluations are bounding for the CASTOR V/21, CASTOR X/33, MC-10, NAC-I/28, TN-32, and NUHOMS OS187H casks. Cask weights, including the lifting device, are from approximately 157,000 lb to approximately 240,000 lb. The cask lifting device weighs approximately 7000 lb, therefore, its movement over the spent fuel storage pool is also controlled as a heavy load.

The drop of cask lids into the spent fuel storage pool has also been evaluated. After fuel assemblies are loaded into a cask, the lid is moved over the spent fuel storage pool and placed onto the cask. Conversely, after a loaded cask is placed in the spent fuel storage pool for unloading, the lid is removed from the cask and carried over the pool. Both of these operations take place over the cask loading area of the spent fuel storage pool. Lid weights vary with spent fuel cask design, so the analysis used the heaviest known lid weight of approximately 14,000 lb. If a lid is dropped while it is over the cask, damage to the fuel assemblies in the cask is bounded by the cask drop consequences in Reference 2. If the lid drops edgewise onto a cask impact pad, it does not perforate the top plate of the pad, and the spent fuel storage pool liner and floor are not damaged. If the lid drifts horizontally through the water and strikes the storage racks adjacent to the cask loading area, the damage to storage racks and fuel assemblies is bounded by the analyses in Reference 2. If the lid drifts horizontally and strikes a wall of the spent fuel storage pool, the structural response is also bounded by the cask drop analyses.

Cask and lid handling over the spent fuel storage pool is controlled by written procedures which limit cask and lid lift heights and cask orientation consistent with the cask and lid drop analyses.

9B.1 REFERENCES

1. NUREG-0612, *Control of Heavy Loads at Nuclear Power Plants,* U. S. Nuclear Regulatory Commission, July 1980.

2. Letter from R. H. Leasburg, Vepco, to H. R. Denton, NRC, Subject: *Amendment to Operating Licenses DRP-32 and DRP-37, Surry Power Station Unit Nos. 1 and 2. Proposed Technical Specification Changes,* dated September 23, 1982 (Serial No. 543).

3. Letter from R. H. Leasburg, Vepco, to H. R. Denton, NRC, Subject: *Supplemental Information for Proposed Operating License Amendment,* dated January 17, 1983 (Serial No. 543A).

4. Letter from J. D. Neighbors, NRC to W. L. Stewart, Vepco, Subject: *Amendment No. 84 to Operating License DPR-32 and Amendment No. 85 to Operating License DPR-37, Surry Power Station Units 1 and 2, Technical Specification Changes,* dated March 4, 1983 (Serial No. 131).

9B.2 HEAVY LOADS OVER SAFE-SHUTDOWN EQUIPMENT

9B.2.1 Introduction/Background

On December 22, 1980, NRC issued a generic letter (unnumbered) which was supplemented February 3, 1981 (Generic Letter 81-07) regarding NUREG-0612, *Control of Heavy Loads at Nuclear Power Plants* (Reference 1) NUREG-0612 presents an overall philosophy that provides a defense-in-depth approach for controlling the handling of heavy loads. The approach is directed toward the safe handling of lifted loads.

The NRC requested that Surry Power Station implement certain interim actions and provide information related to heavy loads. Submittals were requested in two parts; a 6-month response (Phase I) and a 9-month response (Phase II). Phase I responses were to address Section 5.1.1 of NUREG-0612 which covers the following areas:

Guideline 1 - Safe Load Paths

Guideline 2 - Load Handling Procedures

Guideline 3 - Crane Operator Training

Guideline 4 - Special Lifting Devices

Guideline 5 - Lifting Devices (not specially designed)

Guideline 6 - Cranes (inspection, testing, and maintenance)

Guideline 7 - Crane Design

In addition, the Phase I Report was to identify all load handling systems within the plant that are capable of carrying a heavy load. These load handling systems were divided into two groups:

Group I: Heavy load handling systems from which a load drop may result in damage to any system required for plant shutdown or decay heat removal, taking no credit for interlocks, technical specifications, operating procedures, detailed structural analysis or system redundancy.

Group II: Heavy load handling systems excluded from Group I based on determination by inspection that there is sufficient physical separation between any load impact point and any system needed for plant shutdown or decay heat removal.

Phase II responses were to address Sections 5.1.2 thru 5.1.6 of NUREG-0612 which cover the need for electrical interlocks/mechanical stops, or alternatively, single-failure-proof cranes or load drop analyses in the spent fuel pool area, containment building, and other areas of the plant, and the specific guidelines for single-failure-proof handling systems.

On June 28, 1985, NRC issued Generic Letter 85-11 (Reference 2) which rescinded Phase II. It concluded that Phase I implementation had provided sufficient protection such that the risk associated with potential heavy load drops was acceptably small and no further action was required beyond that identified during Phase I. The NRC Safety Evaluation and their consultant's Technical Evaluation Report (TER) (Reference 3) for the six month response (Phase I) were issued in 1984 with program clarifications via Generic Letter 85-11.

The Surry Technical Specifications (TS) also prohibit heavy loads from being moved over spent fuel. Detailed discussion of how the heavy loads program implements this requirement is presented in Section 9B.2.5.

The following sections summarize the commitments that were made by Virginia Power as part of the Phase I submittal with regard to compliance with Section 5.1.1 of NUREG-0612. Any errors made in the Phase I report are noted and corrected. Additions to the heavy loads program that have been incorporated since the issuance of the Phase I report are also included. Program deletions are detailed within the References. Each of the seven guidelines of Section 5.1.1 of NUREG-0612 along with the definition of a heavy load subject to NUREG-0612 and the list of the handling systems that are capable of moving heavy loads subject to NUREG-0612 are discussed in detail below.

9B.2.2 Heavy Loads

NUREG-0612 defines a heavy load as any load that weighs more than the combined weight of a single spent fuel assembly and its associated handling tool. Surry's Phase I report established this load as 2000 pounds; however, a lower weight of 1600 pounds has been adopted in recognition of the more restrictive definition given in Technical Specifications (TS). A load is subject to NUREG-0612 if it exceeds 1600 pounds and is carried over irradiated fuel, safe shutdown equipment or decay heat removal equipment.

9B.2.3 Overhead Heavy Load Handling Systems

The following load handling systems are subject to compliance with NUREG-0612:

1. Reactor Containment Polar Cranes
2. Reactor Containment Annulus Monorail
3. Containment Jib Cranes
4. Fuel Building Motor Driven Platform
5. Auxiliary Building 10-ton Monorail (27' level)
6. Auxiliary Building 5-ton Monorail (13' level)
7. RHR Pump Motor Lifting Lugs
8. Spent Fuel Crane

The RHR pump motor lifting lugs were plant modifications completed after the TER was issued. A jib crane in each containment was mentioned in the TER; this crane is included in heavy loads procedures. The TER included other handling systems as originally being subject to NUREG-0612 that are no longer included in the heavy loads program. Reference 5 discusses those handling systems and the justification for their elimination. A listing of heavy loads per handling system is tabulated in Table 9B.2-1.

9B.2.4 NUREG-0612, Section 5.1.1 Guidelines

9B.2.4.1 Safe Load Paths

Safe load paths for the movement of heavy loads have been developed which follow, to the extent practical, structural floor members, beams, etc., such that if the load is dropped, the structure is more likely to withstand the impact. Either a sketch or description of the load paths have been incorporated into lifting procedures. Safe load paths do not require specific lift height restrictions other than to keep the load as low as practical while maintaining adequate vertical clearances over obstructions in the load path. Maximum lift height limits and load drop studies were part of the Phase II requirements that were rescinded by the NRC (Reference 2).

Safe load paths are discussed during the pre-job briefing and loads are guided along the safe load path during the lift operation. Also, restricted areas are used in the containment structure for several heavy loads such as concrete floor plugs that are routinely shuffled to several laydown areas during an outage. These restricted areas include: over the reactor, steam generators, and main steam/feedwater riser area. Drawings are available which indicate operating floor capacities that are used during outages to control laydown space in conjunction with the Heavy Loads Program.

Safe load path sketches are used to control the movement of the fuel transfer canal gates in the fuel pool.

9B.2.4.2 Load Handling Procedures

Station maintenance procedures have been developed for performing heavy load lift operations. The procedures identify the following items:

1. Equipment identification.
2. Required equipment inspections and acceptance criteria prior to performing lift and movement operations.
3. Approved safe load paths.
4. Safety precautions and limitations.
5. Special tools, rigging hardware, and equipment required for the heavy load lift.
6. Rigging arrangement for the load.
7. Adequate job steps and proper sequence for handling the load.

9B.2.4.3 Crane Operators Training

NUREG-0612 requires that crane operators be trained, qualified and conduct themselves in accordance with Chapter 2-3 of ANSI B30.2-1976, *Overhead and Gantry Cranes* (Reference 6). Station administrative procedures ensure that crane operators are qualified.

9B.2.4.4 Special Lifting Devices

As indicated in the TER (Reference 3):

> [The following special lifting devices in use at Surry Units 1 and 2 were identified as being subject to compliance with the criteria of NUREG-0612 and ANSI N14.6-1978:
>
> a. reactor vessel head lifting device (RVHLD)
>
> b. internals lifting rig (ILR)
>
> c. reactor coolant pump motor sling (RCPLS)
>
> The original manufacturer of these devices (Westinghouse) performed a detailed comparison of the ANSI criteria and records that document the original design, manufacture, inspection, and testing of the special lifting devices. Results of this review indicate that the devices meet the intent of the ANSI Standard for design, fabrication, and quality assurance, but are not in strict compliance with criteria for maintenance, acceptance testing, or continuing compliance.
>
> Design, fabrication, and quality assurance requirements for these devices were defined on detailed manufacturing drawings and purchase orders. A stress report was prepared, applying the design margin criteria of 3 (yield) and 5 (ultimate) on stress, and results indicate that all devices possess acceptable limits for tensile and shear stress with the following exceptions for the internals lifting rig: (1) tensile and shear stresses in the side plates; (2) thread shear stresses in the leg adaptor; and (3) the tensile stress at the minimum section of the engaging screw. For these exceptions, it was noted that the actual margin is slightly less than the specified criterion of 3 on yield stress, whereas all components satisfy the criterion of 5 on ultimate stress. It is therefore concluded that the existing design is adequate.
>
> In addition, manufacturing surveillance of hold points, procedure review, and personnel qualification which adequately meet ANSI requirements were also provided by the manufacturer during the fabrication and assembly of these devices. Load tests to 100% have been performed for each of the devices, although documentation is available for the reactor vessel head lifting device only. Although load tests in excess of 100% have not been performed, it is felt that such tests are not necessary since proof of workmanship can be documented through use of existing load tests, adequate design margins, and documentation of procedures that were actually used during the manufacture of these devices. Maintenance procedures require visual examinations of the

special lifting devices prior to each refueling and each containment maintenance period if use of the device is anticipated. These visual inspections include inspections of all critical welds and bolted joints or connections, and results are appropriately documented. In addition, a load cell is used during lifts by the reactor vessel head lifting device and the internals lifting rig to provide continuous monitoring to prevent overstressing of either device. To ensure an even higher level of confidence and acceptability of these devices, a nondestructive examination (NDE) program is established. This program includes inspection and NDE of all critical welds and critical parts of the lifting devices over the in-service inspection period of 10 years.]

Five additional special lifting devices have been identified that were not included in the TER:

8. Spent filter cask spreader beam
9. Spent fuel cask lifting yoke
10. Long cask lid lifting tool
11. Short cask lid lifting tool
12. Alternate lift rig for the SFP transfer canal gates.

These lifting devices have been included in station administrative procedures as special lifting devices and will be visually inspected prior to use and immediately after lifting the load. These devices will also be inspected under the 10-year Inservice Inspection Program using NDE methods.

The Reactor Vessel Head Stud Racks have been identified for inclusion under the guidelines of NUREG-0612 at Surry. These special lifting devices were not previously mentioned in the TER nor were they included with the subsequent group of five, as listed above in (8) through (12):

13. Reactor vessel head stud racks

The stud racks are not, however, in strict compliance with ANSI N14.6-1978 for design, fabrication, quality assurance, maintenance and continuing compliance, as noted in the following exceptions:

1. Stud racks were fabricated without official design calculations. To reconstitute a design basis, an engineering evaluation was performed, following the design criteria of ANSI N14.6-1978. The stud racks were conservatively assumed to be fabricated out of carbon steel materials, with strength properties at least comparable to that of ASTM A 36.
2. Stud racks were fabricated without fabrication or quality assurance records. Each of these stud racks has received a post-modification load test to 150% of their rated load capacities. A visual inspection was performed to further assess the quality of construction. Following the modifications, baseline nondestructive examinations were performed on all critical welds and critical parts to provide documented evidence of quality construction.

3. Annual testing per ANSI N14.6-1979 requires that either a 150% load test or dimensional, visual and nondestructive testing be performed. However, plant procedures presently require that each device, its welds, and any bolted joints be visually inspected prior to use and immediately after lifting the load. Therefore, the ANSI annual testing requirements have been waived in lieu of the prior-to-use visual inspections. To ensure more reliability and a higher level of confidence in the continuing compliance with ANSI N14.6-1978, Surry has instituted a nondestructive examination (NDE) program, which will provide for inspection and NDE of all critical welds and critical parts over a normal service interval of 10 years.

Based on the above, it is concluded that:

1. All tensile and shear stresses meet ANSI N14.6-1978 design criteria.
2. The ANSI requirements for design, fabrication, and quality assurance are generally in agreement with those used for these special lifting devices.
3. Although not in strict compliance with ANSI requirements, the load tests and nondestructive testing performed following assembly demonstrates the acceptability of these special lifting devices. Present station procedures meet the intent of ANSI N14.6-1978 regarding verification of continuing compliance.

In addition to the previously stated lifting devices, an intermediate lift ring, supplied by Framatome ANP, was installed during the installation of the SPS Unit 1 replacement closure head. Installation of the intermediate lift ring will utilize the existing lift rod lower clevises, along with the lift ring lower adapter blocks and lift pins, to attach the lift ring to the lifting rig assembly and the replacement closure head lifting lugs. The lift ring components were tested to 150% of the design load (i.e. 483,000 lb) for a minimum of ten (10) minutes, which meets the requirements of ANSI N14.6-1978. After this load-test, non-destructive and visual examinations were performed for surface indications, evidence of permanent deformation, and other nonconformances. Surfaces of the intermediate lift ring, adapter blocks, bolts, and lift pins were examined utilizing PT with acceptance criteria as established by NF5350 of the ASME Section III 1995 Edition with Addenda through 1996. Furthermore, post load-test visual examinations and dimensional checks for evidence of permanent deformation of the intermediate lift ring, adapter blocks, bolts, and lift pins were conducted. These examinations have demonstrated that the intermediate lift ring is acceptable for lifting operations (Reference 14).

9B.2.4.5 **Lifting Devices Not Specially Designed (Slings)**

A Surry station administrative procedure requires that slings used for heavy load lifts meet the requirements specified for slings in accordance with ANSI B30.9-1971 (Reference 7).

As stated in the TER (Reference 3), evaluation of sling capacity indicates that dynamic load constitutes a small percentage of the total load imposed on the slings; therefore, the sling's ratings can be safely expressed in terms of the maximum static load only.

9B.2.4.6 **Cranes (Inspection, Testing, and Maintenance)**

Cranes subject to NUREG-0612 requirements are inspected, tested, and maintained in accordance with Chapter 2-2 of ANSI B30.2-1976, *Overhead and Gantry Cranes*, Chapter 11.2 of ANSI B30.11-1973, *Monorail Systems and Underhung Cranes*, or Chapters 16-1.2.1 and 16-1.2.3 of ANSI B30.16-1973, *Overhead Hoists* (References 6, 8 & 9), with the exception that tests and inspections may be performed prior to use for infrequently used cranes. Inspections and testing following modifications to the Unit 1 and Unit 2 containment polar cranes, that were required to increase the capacity of each main hoist from 125 tons to 140 tons for reactor head replacement, were done in accordance with ASME B30.2-2001, which is the latest version of the above referenced code. Only the modified portions of the uprated cranes were required to be tested and inspected. Prior to making a heavy load lift, an inspection of the crane is made in accordance with the above applicable standards.

9B.2.4.7 **Crane Design**

NUREG-0612, Section 5.1.1 (Reference 1), requires “the cranes be designed to meet the applicable criteria and guidelines of Chapter 2-1 of ANSI B30.2-1976, *Overhead and Gantry Cranes* (Reference 6) and of CMAA-70, *Specifications for Electric Overhead Traveling Cranes* (Reference 11). An alternate to a specification in ANSI B30.2 or CMAA-70 may be accepted in lieu of specific compliance if the intent of the specification is satisfied.”

CMAA-70 and ANSI B30.2-1976 apply to the reactor containment polar cranes and the spent fuel crane. These cranes were designed and fabricated in accordance with Electric Overhead Crane Specification #61 (Reference 12) prior to the issuance of the above reference standards. The Nine-Month Report (Reference 4) provided the results of a review of existing crane design with the recommendations contained in CMAA-70 and Chapter 2-1 of ANSI B30.2-1976. The NRC concluded in the TER that the design of the containment polar cranes and the spent fuel crane is consistent with the guidance in Section 5.1.1 of NUREG-0612 (Reference 1). Modifications to the Unit 1 and Unit 2 containment polar crane that were required to increase the capacity of each main hoist from 125 tons to 140 tons for reactor head replacement, were done in accordance with CMAA-70 and ASME B30.2-2001.

The reactor containment jib cranes were designed and fabricated in accordance with ANSI B30.16-1973 and ANSI B30.11-1973 (References 9 & 8). The reactor containment annulus monorails and 10-ton Auxiliary Building monorail systems, and motor-driven platform and hoists were designed in accordance with EOCI 61. It was concluded in the TER that these cranes and monorails meet the requirements of ANSI B30.11 and ANSI B30.16, and these load handling systems meet the intent of NUREG-0612.

The Auxiliary Building 13'-0" Elevation 5-ton hoist is designed to ANSI B30.16. Additionally, the hoist complies with ASME HST-4, *Performance Standard for Overhead Electric Wire Rope Hoists*. These two documents ensure the same level of design, testing and inspection as specified in the TER and compliance with NUREG-0612 requirements.

9B.2.5 Technical Specifications (TS)

Loads exceeding 110% of the weight of a fuel assembly are prohibited by TS from being lifted over spent fuel in the reactor vessel and the spent fuel pool with an explicit exception for the transfer canal door. The NUREG-0612 heavy loads program is used to implement the TS load restriction for loads greater than 1600 pounds; fuel handling procedures are used to implement the restriction which prevents handling more than one fuel assembly at a time over the reactor or spent fuel pool. Fuel handling is outside the scope of the NUREG-0612 program. NUREG-0612 heavy load procedures are used to control lifting of the transfer canal gate and additional exceptions associated with reactor vessel assembly and disassembly as discussed below.

- Movement of the spent fuel pool transfer canal doors are controlled by a NUREG-0612 heavy loads procedure which allows lifting over spent fuel in accordance with the TS.
- Movement of heavy loads over spent fuel in the reactor vessel are allowed for lifts that service the reactor such as the Unit 1 CRD missile shield, the cavity seal ring, the Unit 1 reactor head, the Unit 2 reactor head and head assembly upgrade package, and the reactor upper internals. These lifts are controlled by NUREG-0612 heavy loads procedures.
- Other loads exceeding 1600 pounds are not lifted over spent fuel in the reactor and spent fuel pool as required by TS. Movement of loads greater than 1600 pounds over spent fuel in the reactor and spent fuel pool are prohibited by NUREG-0612 heavy loads procedures which identify the reactor and the spent fuel storage area of the pool as restricted areas over which these loads shall not be lifted.
- The polar crane bottom block and hook are not considered as either a TS or NUREG-0612 heavy load because it is an integral part of the polar crane which is inspected and maintained by procedures in compliance with NUREG-0612 requirements. The unloaded failure of the lower block and hook is not considered a credible accident. Lifting procedures do not prevent the unloaded block's movement over spent fuel whether it is in the core or being moved via the fuel handling system.

9B.2 REFERENCES

1. H. George, *Control of Heavy Loads at Nuclear Power Plants*, NUREG-0612, U. S. Nuclear Regulatory Commission, Washington, D. C., July 1980
2. Generic Letter 85-11, *Completion of Phase II of Control of Heavy Loads at Nuclear Power Plants, NUREG-0612*, June 28, 1985 (Serial #85-507)
3. Letter from S. A. Varga, NRC, to W. L. Stewart, VEPCO, *Control of Heavy Loads (Phase I)*, dated May 16, 1984, Docket Nos. 50-280 and 50-281, with enclosed *Safety Evaluation Report*, and *Technical Evaluation Report*, TER-C5506-395/396, dated April 23, 1984.
4. Letter from R. H. Leasburg, VEPCO, to H. R. Denton, NRC, *NUREG-0612, Control of Heavy Loads*, dated March 22, 1982, with enclosed *Nine Month Response* for both North Anna and Surry Power Stations.
5. Letter from J. P. O'Hanlon, VEPCO, to NRC, *Response to NRC Bulletin NRC 96-02*, dated May 13, 1996.
6. American National Standards Institute, ANSI B30.2-1976, *Overhead and Gantry Cranes*
7. American National Standards Institute, ANSI B30.9-1971, *Slings*
8. American National Standards Institute, ANSI B30.11-1973, *Monorail Systems and Underhung Cranes*
9. American National Standards Institute, ANSI B30.16-1973, *Overhead Hoists*
10. American National Standards Institute, ANSI N14.6-1978, *Special Lifting Devices for Shipping Containers Weighing 10,000 Pounds (4500kg) or More*
11. Crane Manufacturers Association of America, Inc., *Specifications for Electric Overhead Traveling Cranes*, CMAA-70, Pittsburgh, Pa., 1975
12. Electric Overhead Crane Institute, *Specifications for Electric Overhead Traveling Cranes*, EOCI-61, Pittsburgh, Pa.
13. American Society of Mechanical Engineers, ASME B30.2-2001, *Overhead and Gantry Cranes.*
14. Framatome ANP Document 23-5026339, *QA Data Package - Intermediate Lift Ring for SPS 1 RVCH.*
15. ASME HST-4, *Performance Standard for Overhead Electric Wire Rope Hoists*.

Table 9B.2-1
HEAVY LOADS[1]

Handling System	Heavy Load	Weight or Capacity (Tons)
Containment Polar Crane		140/15
a.	(Unit 1) RV Head and Lifting Device[10]	139
	(Unit 2) RV Head, Lifting Device and CRD Missile Shield	132.6
b.	RV Head Lifting Device (Tripod)[7]	4.0
c.	RV Upper Internals and Lifting Rig	52.0
d.	RV Upper Internals Lifting Rig[7]	6.5
e.	Reactor Coolant Pump Motor and Sling	41.0
f.	RCP Motor Sling[7]	1.1
g.	RV Inner Seal Ring and Lifting Device	12.2
h.	(Unit 1) CRDM Missile Shield	36.5
i.	Reactor Stud Rack (Full)	3.6
j.	Floor Concrete Plugs	1 to 31.5
k.	Polar Crane Bottom Block and Hook[2]	N/A
l.	Recirc. Spray Cooler[3]	23.7
m.	Regenerative Heat Exchanger[3]	2.4
n.	RHR Exchanger[4]	12.8
o.	RHR Pump Motor	2.4
p.	Undefined loads	140.0 (max. main hook) 15.0 (max. aux. hook)
Containment Annulus Monorail		5.0
	Various Loads up to Rated Capacity	5.0 (max.)
Containment Jib Cranes		8.0
	Various Loads up to Rated Capacity	8.0 (max.)
Five Ton Aux. Bldg. Monorail System		5.0
a.	Component Cooling Water Pump[5]	2.7
b.	Component Cooling Water Pump Motor[5]	3.2
c.	Charging Pump[5]	1.3
d.	Charging Pump Motor[5]	2.1
e.	Removable Slabs	4.5 (max.)
f.	Spent Filter Casks[6]	4.0
g.	Undefined loads	5.0 (max.)
RHR Pump Motor Lifting Lugs		3.0
	RHR Pump Motors	3.0

Table 9B.2-1 (continued)
HEAVY LOADS[1]

Handling System	Heavy Load	Weight or Capacity (Tons)
Ten Ton Aux. Bldg. Monorail System		10.0
	Removable Slabs, Spent Filter Cask[6], and Undefined loads	10.0 (max.)
Fuel Building Motor Driven Platform & Hoists		2 @ 2.0
	Fuel Pool Gate	1.8
Spent Fuel Crane		125/10
a.	Spent Fuel Cask (incl. Fuel, Yoke, Lid)	125
b.	Spent Fuel Cask Yoke	3.3
c.	Spent Fuel Storage Cask Lid and Tool[8]	6.9
d.	Spent Resin Container and Cask[9]	N/A
e.	Irradiated Specimen Cask	5.7
f.	Fuel Pool Gate	1.8

NOTES TO TABLE 9B.2.1:

1. The loads in the table have been taken from the TER3 unless noted otherwise. Whether or not a specific lift (or a load not listed) will be subject to NUREG-0612 is determined by standards and procedures which address Virginia Power's implementation of NUREG-0612 commitments. All weights and capacities are for reference only, are not controlled and are considered approximate.

2. The crane load block is not subject to NUREG-0612 and does not have a lift procedure since it is an integral part of the crane. To ensure that the load block is not dropped, the redundant hoist limit switches are performance tested prior to use.

3. The recirc. spray cooler and regen. heat exchanger were listed in the TER as subject to NUREG-0612; however, existing maintenance procedures for these items do not permit lifting of the entire heat exchangers. If such lifts are planned in the future, new procedures must be written. Compliance with NUREG-0612 commitments will be determined on a case-by case basis and depends upon whether or not the reactor is defueled and containment systems are isolated from an operating unit during the lift.

4. The RHR heat exchanger was listed in the TER as subject to NUREG-0612. Existing station procedures address performing maintenance which will only be performed while the reactor vessel is defueled; therefore, this lift is not subject to NUREG-0612.

5. Several loads handled by the six-ton monorail in the Aux. Building were listed in the TER as being subject to NUREG-0612. Certain lifts (as footnoted) are not subject to NUREG-0612 since procedural controls prevent loads from being moved over adjacent operational safe shutdown equipment.

6. Spent filter cask not listed in the TER; however it is classified as subject to NUREG-0612 since it is lifted over safe shutdown equipment.
7. Lifts of the reactor head lifting rig (tripod), the reactor internals lifting rig, and RCP motor lifting rig are listed above since each rig weighs more than 1600 pounds; these items were not listed individually in the TER.
8. The lift of the spent fuel cask lid was not included in the TER and is subject to NUREG-0612.
9. Lifts of the spent resin container and its cask are performed in the decontamination building where NUREG-0612 is not applicable.
10. Intermediate lift ring was designed, fabricated, and initially load tested to meet the requirements of NUREG-0612 and ANSI N14.6-1978. Refer to Section 9B.2.4.4 for compliance with the requirements.

9B REFERENCE DRAWINGS

The list of Station Drawings below is provided for information only. The referenced drawings are not part of the UFSAR. This is not intended to be a complete listing of all Station Drawings referenced from this section of the UFSAR. The contents of Station Drawings are controlled by station procedure.

	Drawing Number	Description
1.	11448-FM-1A	Machine Location: Reactor Containment, Elevation 47'- 4"
2.	11448-FM-1B	Machine Location: Reactor Containment, Elevation 18'- 4"
3.	11448-FM-1E	Machine Location: Reactor Containment; Sections “A-A”, “E-E”, & “Z-Z”
4.	11448-FM-9A	Arrangement: Fuel Building, Sheet 1
5.	11448-FM-9B	Arrangement: Fuel Building, Sheet 2, Unit 1

Intentionally Blank

Appendix 9C
Flood Control System

Intentionally Blank

Appendix 9C: Flood Control System

Table of Contents

Section	Title	Page
9C.1	DESIGN BASIS FLOODING	9C-1
9C.1.1	Features to Protect Safety Related Equipment Against Failure in the CW/SW Systems	9C-1
9C.1.2	Features to Protect Safety Related Equipment Against Failure in the Fire Protection System	9C-2
9C.2	INDIVIDUAL PLANT EXAMINATION INTERNAL FLOODING	9C-4

Intentionally Blank

Appendix 9C
FLOOD CONTROL SYSTEM

9C.1 DESIGN BASIS FLOODING

Evaluation of design basis flooding considers the postulated failure of a non-Category I (non-seismic) system resulting in the potential for internal plant flooding, which could affect safety related equipment. Postulated failures were considered in the fire protection system and the non-Category I portions of the circulating water and service water systems. Several design features exist to mitigate the effects of flooding and protect safety related equipment from malfunction. Additionally, consideration was also given to consequence of a potential failure of the short section of exposed Category I circulating water (CW) piping immediately upstream of the condenser CW inlet isolation valve. (See Section 10.3.4.3.)

9C.1.1 Features to Protect Safety Related Equipment Against Failure in the CW/SW Systems

Several design features exist to provide sufficient time for an operator to identify and isolate a postulated flood source prior to it affecting safety related equipment. These features include control room annunciation of high water level in select service water (SW) valve pits, flood water storage volume, safety related equipment flood protection, flood flowrate reduction, and automatic isolation, as applicable.

Dikes

Dikes are installed to provide a barrier to minimize the passage of flood water into areas where safety related components are located. These dikes are two feet high and are located as described below.

The SW valve pits are protected with dikes to prevent flooding of the service water supply motor-operated valves for the recirculation spray (RS), bearing cooling, and component cooling heat exchangers, and the Unit 2 turbine building service water subsystem. These dikes, which are constructed of removable metal plates, encompass the pits as well as separate the two RS SW trains.

The pit which provides entrance to the auxiliary building pipe tunnel is protected with a concrete dike. This dike prevents turbine building floodwaters from entering the auxiliary building.

A removable metal plate dike is located inside the entrance to mechanical equipment room #3 (MER3, MCR Chiller Room) to prevent water flow from MER3 to the emergency switchgear room (ESGR). Additionally, the pipe tunnel from MER3 to the ESGR has been sealed to prevent the passage of floodwater to the ESGR.

A removable metal plate dike is also located at the entrance to the ESGR to restrict turbine building floodwater from entering the ESGR.

A removable metal plate dike is located at the entrance to mechanical equipment room four (MER4) to restrict turbine building floodwater from entering MER4 and potentially affecting the charging pump service water pumps.

Amertap Pit

One of the four checkered plates covering each unit's Amertap (CW outlet MOV) pit was replaced with open grating to allow floodwater to freely flow into this pit. This provides additional floodwater storage volume and a more prompt actuation of the Amertap pit high level alarms in the event of turbine building flooding.

Circulating Water Flooding Alarm and Trip System

Level sensing devices are located in the CW intake pit (south side of condenser), the CW outlet pit (north side), and the Amertap pit of both units to actuate a high level annunciator in the main control room. In the event the flooding source is not manually controlled, a separate set of three water level sensing devices will automatically close the CW inlet MOVs when two out of three devices sense a water level of nine inches above the basement floor elevation. These trip probe are located on the floor elevation at the south side and at the northeast and northwest corners of the condenser.

Circulating Water and Service Water Expansion Joints

Each of the circulating water inlet, intermediate outlet, and outlet expansion joints (twelve per unit) and bearing cooling water heat exchanger service water supply and discharge expansion joints (six per unit) is enclosed by a removable flow restriction shield. These shields act as a passive flow restraint to limit water flowrate in the event of a ruptured expansion joint.

Floor Drain Isolation

Two floor drains in the electrical tunnels, two floor drains in the emergency switchgear and relay rooms, three floor drains in mechanical equipment room #3, and the single floor drain in mechanical equipment room #4 have backflow preventors installed to prevent a backflow of water from the turbine building into these areas via the floor drain system. The equipment drain inside the concrete dike in the turbine building near column line C-7 is sealed to prevent backflow of water into the auxiliary building.

9C.1.2 Features to Protect Safety Related Equipment Against Failure in the Fire Protection System

Flooding, caused by failure in the fire protection system, in general, does not adversely affect safety related equipment. Large floodwater storage volumes and the many floor drains and sumps throughout the plant provide adequate time for an operator to identify and isolate a fire

protection system flood source before reaching a significant water level. The system of alarms in the fire protection system and area sumps provides the means to alert the operators to a possible fire protection system flood situation. Following source identification, fire protection lines in each building may be readily isolated by a single manual isolation valve located at the supply header to each building. For features which prevent flooding during fire fighting activities see Section 9.10.2.

Specific fire protection system design basis flooding features are discussed in the following paragraphs.

Fuel Building Trip Valve

For the fuel building, a normally closed, fail-open trip valve was installed just outside the building in the six-inch supply header to address potential internal flooding.

The fuel building does not have sufficient floodwater storage volume or sufficient drainage to contain the water which could leak from a catastrophic failure in the fire protection system. The supply line trip valve maintains the system within the fuel building in a dry, depressurized state. The two hose racks within the fuel building each are equipped with a remote control station to open the trip valve when needed. (See Section 9.10.4.14.)

Charging Pump Cubicle Dikes

A two foot high concrete dike prevents floodwater flowing across the auxiliary building Elevation 13 foot floor from entering the charging pump cubicles.

Fire Main Deflector

A six-inch fire protection line runs along the turbine building north wall above the mezzanine level near the ESGR opening. To prevent water from spilling into the ESGR side of the dike located at the ESGR entrance, a flow directing pipe sleeve around the six inch line directs water to either end of the dike surrounded area.

Water Level Monitoring System

In addition to the circulating water flooding alarm and trip system, an alarm system monitors the water level in the auxiliary building, fuel building, main steam valve house, emergency switchgear and relay room, Amertap pits, and the service water valve pits. Upon a high water level signal, an annunciator will sound in the control room. The master flood monitor panel can then be used to determine the location of the flooding area. This system is powered from vital bus circuits to provide reliable indication in the event of a loss of offsite power.

9C.2 INDIVIDUAL PLANT EXAMINATION INTERNAL FLOODING

An Individual Plant Examination (IPE) was performed for Surry in response to Generic Letter 88-20, *Individual Plant Examination for Severe Accident Vulnerabilities*. The purpose of an IPE is to systematically identify plant-specific vulnerabilities to severe accidents and, if justified, define modification of hardware and/or procedures to reduce the probability of core damage. This evaluation is based on plant specifics without regard to component safety classification or qualifications and, therefore, goes beyond the licensing basis in its assessment.

The IPE for Surry identified a vulnerability to internal flooding which warranted changes to the plant and procedures beyond the design basis specified above in Section 9C.1, Design Basis Flooding. Hardware modifications and procedural changes made to address the internal flooding vulnerability include those items discussed in the following paragraphs.

The most significant flood sources identified by the IPE were RWST piping in the auxiliary and safeguards buildings, SW system in MER3, and CW/SW systems in the turbine building.

Failure of the safety-related RWST suction piping to the containment spray, charging (HHSI), and low head safety injection pumps may cause significant flooding of the safeguards or auxiliary buildings. Floodwater from the safeguards building would propagate to the auxiliary building through interconnecting pipe tunnels. Flooding the auxiliary building would subsequently affect the component cooling water pumps and charging pumps once the water depth reached approximately eighteen inches. Loss of both of these systems could lead to RCP seal failure due to loss of seal injection and loss of thermal barrier cooling.

Backflow preventors have been installed in each charging pump cubicle's floor drain to minimize the probability of common mode flooding of both unit's pumps via the common auxiliary building floor drain system. The pipe penetrations into the charging pump cubicles which could be submerged during a flooding event are sealed to minimize passage of floodwater.

Rupture of the CW/SW system in the turbine building can lead to a spectrum of potential floodrates. The lower probability—but higher consequence—flood events, if not isolated, can lead to flooding of the ESGR and subsequent core damage. Plant design features associated with Design Basis Flooding (Section 9C.1) were considered in the IPE. Additional plant modifications were implemented to reduce the overall probability of core damage. One of these modifications was the installation of removable flow restriction shields around the rubber expansion joints immediately downstream of the service water isolation MOVs serving the bearing cooling heat exchangers (both units) and the component cooling heat exchangers. Another plant modification was implemented to limit the potential effects of a SW failure in MER3. A watertight door at the entrance to MER3 was installed to delay the progression of flooding originating in MER3 into the ESGR. The door assembly includes a two foot tall bottom panel (dike) which permits access to MER3 during flooding events (until flood level reaches two feet) and is removable to permit access for heavy equipment during maintenance activities. The upper door section is normally

closed and sealed (unless personnel are in MER3). The door assembly is designed for seismic or hydrostatic loadings (non-simultaneous). The north, south (adjacent to MER4), and west wall penetrations in MER3, which could be submerged during a flooding event, were modified by applying a watertight sealant.

Additionally, operation of the turbine building sump pumps can delay or prevent floodwater from entering the ESGR. To ensure availability of these pumps, an administrative limit for minimum number of functional pumps has been instituted, as well as surveillance testing and preventive maintenance. The turbine building sump pumps remove floodwaters resulting from ruptures in the turbine building which flow via the floor drain system into the sump. To enhance removal of water associated with overflow of the floor drains in the turbine building, the checkered plate manhole covers over each sump were replaced with open grating.

Although these modifications were not quantified in terms of reduction in the overall probability of core damage, two enhancements were also implemented to address the internal flooding vulnerability. These two enhancements are:

1. Turbine building flooding which occurs as a result of a rupture in the CW or SW system upstream of the first canal isolation valve can be isolated by installing the seal plates at the high level intake structure. Rollers have been added to the plates to enhance their ability to slide into place under flow conditions without binding.
2. To enhance the ability to isolate flow to the condenser waterboxes or downstream rupture during flooding conditions, the motor operators for the inlet valves have been modified for operation while submerged.

Procedures have been revised to reflect sensitivity related to potential turbine building flooding resulting from certain maintenance activities. Where appropriate, maintenance procedures require that a flood watch be posted during the maintenance evolution and that double isolation be established prior to initiation of the maintenance effort.

Intentionally Blank