Chapter 12: Radiation Protection

Table of Contents

Chapter 12: Radiation Protection

Table of Contents (continued)

Chapter 12: Radiation Protection

List of Tables

Chapter 12: Radiation Protection

List of Figures

Chapter 12
RADIATION PROTECTION

At the North Anna Power Station, entrance to the station proper is controlled by station security. Inside the station proper, there is a protected area (inner barrier) consisting of fences and/or walls of structures. The containment building, turbine building, auxiliary building, service building, fuel building and other miscellaneous buildings are within the protected area. From a radiological access standpoint, the area within the protected area is the primary restricted area. Other secondary restricted areas exist within the station proper but outside the protected area, such as the Old Steam Generator Storage Facility. Individuals entering restricted areas must have satisfactorily completed a basic Health Physics training course or possess the equivalent Health Physics knowledge, or be escorted by an individual who has those qualifications.

Within the restricted areas, Health Physics procedures are implemented as detailed in Sections 12.1.5 and 12.3. It is anticipated that, during normal station operation, areas outside the established restricted areas will not experience radiation levels sufficient to classify them as restricted areas in the context of 10 CFR 20. However, if such radiation levels were to occur, they would be detected by periodic radiation surveys and appropriate radiation protection measures would be established for such areas in accordance with Section 12.3.

The policy and objectives of Vepco are to ensure that the exposure of personnel to radiation is maintained as low as is reasonably achievable (ALARA) at its nuclear power stations. Maintaining individual exposure ALARA is a requirement of 10 CFR 20 and a management commitment. Management assumes the responsibility for ensuring the implementation of this policy by its incorporation into all aspects of station planning, design, construction, operation, maintenance, and decommissioning. This policy applies not only to controlling the maximum dose to individuals but also maintaining the collective dose to personnel, i.e., total man-rem exposure, as low as is reasonably achievable.

To attain the goal of this commitment, system, station, and contractual personnel shall integrate their efforts as necessary to perform their functions in such a manner that exposure(s) to radiation will be maintained ALARA. As applicable, new procedures shall be formulated while existing procedures and practices shall be reviewed and modified, if necessary, to ensure their conformance to the principle of maintaining exposures ALARA.

Intentionally Blank

12.1 SHIELDING

12.1.1 Design Objectives

Radiation protection, including radiation shielding, is designed to ensure that the criteria specified in 10 CFR 20 and 10 CFR 50 are met during normal operation and that the guidelines suggested in 10 CFR 50.67 and Regulatory Guide 1.183 would be met in the event of the design-basis accident (Section 15.4.2).

Virginia Power implemented the revised 10 CFR 20 January 1, 1994. The criteria used for design-basis accidents based on the old 10 CFR 20 retain their same definitions and therefore the DBA analyses do not require recalculation using criteria of the revised 10 CFR 20 rule. (Reference: First set of NRC Question/Answer #14.)

Design dose rates are based on the expected frequency and duration of occupancy. Values of design dose rates are upper limits and are based on conservative assumptions. Representative operating dose rates are expected to be much lower than the design dose rates reported. Occupancy time is such that individual radiation doses will be within the requirements of 10 CFR 20.

Radiation zones are shown on Figure 12.1-1 through 12.1-5 for the containment building, auxiliary building, fuel building, decontamination building, and waste disposal building. The zones are defined in Table 12.1-1.

The service building and onsite environs are Zone 1 throughout. During special operations, local areas within the service building or near the contaminated storage pad or spent-fuel-cask-handling area may temporarily exceed these normal limits; during such times the area will be defined in accordance with health physics procedures.

The average dose rate at the exclusion boundary is such that the exposure of an individual would not be greater than 5 mrem/yr. from all sources of direct radiation at the site. All shielding dose rate calculations are based on 1% failed fuel elements.

Maximum accident doses shall not exceed the following:

Accident or Case	Control Room	EAB & LPZ
Design Basis LOCA	5 rem TEDE	25 rem TEDE
Steam Generator Tube Rupture		
Fuel Damage or Pre-accident Spike	5 rem TEDE	25 rem TEDE
Coincident Iodine Spike	5 rem TEDE	2.5 rem TEDE
Main Steam Line Break		
Fuel Damage or Pre-accident Spike	5 rem TEDE	25 rem TEDE
Coincident Iodine Spike	5 rem TEDE	2.5 rem TEDE
Locked Rotor Accident	5 rem TEDE	2.5 rem TEDE

Accident or Case	Control Room	EAB & LPZ
Rod Ejection Accident	5 rem TEDE	6.3 rem TEDE
Fuel Handling Accident	5 rem TEDE	6.3 rem TEDE

12.1.2 Design Description

Building arrangements and machine location drawings of Units 1 and 2 structures, showing plan and sectional views, are given in Section 1.2.2. The plot plan and site plan are shown on Reference Drawings 3 and 4.

12.1.2.1 Primary Shielding

Primary shielding is provided to limit radiation emanating from the reactor vessel. Such radiation consists of neutrons diffusing from the core, prompt fission gammas, fission product gammas, and gammas resulting from the slowing down and capture of neutrons. The primary shielding is designed to:

1. Attenuate neutron flux to prevent excessive activation of components and structures.
2. Reduce residual radiation from the core to a level that allows access into the normally inaccessible region between the primary and secondary shields at a reasonable time after shutdown.
3. Reduce the contribution of radiation from the reactor to optimize the thickness of the secondary shields.

The primary shield consists of a water-filled neutron shield tank and a concrete shield. The neutron shield tank has a radial thickness of approximately 3 feet, and it is surrounded by 4.5 feet of reinforced concrete. The shield tank prevents the overheating and dehydration of the primary shield wall concrete and minimizes the activation of the plant components within the reactor containment. A cooling system is provided for the water in the neutron shield tank. (The neutron shield tank cooling water subsystem is discussed in Section 9.2.2.)

A 15 ft. 8 in. high x 2 inch thick cylindrical lead shield located beneath the neutron shield tank protects station personnel servicing the neutron detectors during reactor shutdown.

Appendix 12A contains a detailed description of supplementary neutron shielding. The manway in the upper part of the primary shield is plugged during reactor operation. The control-rod drive concrete missile shield located above the reactor vessel is designed to provide some additional neutron shielding. The primary shield arrangement is shown on Figure 12.1-6. The shield materials and thicknesses are listed in Table 12.1-2. The application of Permali material for supplementary neutron shielding is shown on Figure 12.1-7 for Unit 1.

For Unit 2 only, a 3-1/2 inch thick stainless steel radiation shield is provided at the 12-inch diameter Incore Sump Room drain to protect station personnel during normal power operation and during refueling outages.

12.1.2.2 Secondary Shielding

Secondary shielding consists of the shielding for the reactor coolant, the reactor containment, fuel handling equipment, auxiliary equipment, the waste storage area, and the yard, as well as accident shielding.

Nitrogen-16 is the major source of radioactivity in the reactor coolant during normal operation, and its shielding requirements control the combined thickness of the crane and containment walls. In areas such as the auxiliary building, where N-16 is not the major source of activity, activated corrosion and fission products from the reactor coolant system control the secondary shielding. Activated corrosion and fission products in the reactor coolant system also result in the shutdown radiation levels in the reactor coolant loop areas. Tables 11.1-6 and 12.1-3 list the activities used in designing the containment secondary shielding. Table 11.1-6 lists the fission product activities and activated corrosion products in the reactor coolant system with 1% failed fuel. Table 12.1-3 lists the activated corrosion product activities and the N-16 activity at the reactor vessel outlet nozzle.

12.1.2.3 Reactor Coolant Loop Shielding

Interior shield walls separate the reactor coolant loop, pressurizer, incore instrumentation, and containment access sectors. This shielding allows access to the incore instrument sector during normal operation and facilitates maintenance in all sectors during shutdown. The crane support wall provides limited access protection in the annulus between the crane wall and the reactor containment wall and provides part of the exterior shielding required during power operation. Shield walls are provided around each steam generator above the operating floor to a height required for personnel protection. Shielding beams below the operating floor are strategically positioned around the steam generators and reactor coolant pumps. The shielding beams provide protection for personnel in the wall annulus from gamma streaming up through the relief openings in the operating floor. The shielding arrangement is shown in Figures 12.1-6, 12.1-8, and 12.1-9.

12.1.2.4 Containment Structure Shielding

The containment shielding consists of the steel-lined, steel-reinforced concrete cylinder and hemispherical dome as described in Section 3.8.2. This shielding, together with the crane support wall, attenuates radiation during full-power operation and during the assumed design-basis accident to or below design levels at the outside surface of the containment and at the site boundaries.

12.1.2.5 Fuel-Handling Shielding

Fuel-handling shielding is designed to facilitate the removal and transfer of spent-fuel assemblies from the reactor vessel to the spent-fuel pit. It is designed to protect personnel against the radiation emitted from the spent-fuel and control-rod assemblies.

The refueling cavity above the reactor vessel is flooded to approximately Elevation 290 to provide a temporary water shield above the components being withdrawn from the reactor vessel. The water height is thus approximately 26 feet above the reactor vessel flange. This height ensures approximately 7 feet of water above the active portion of a withdrawn fuel assembly at its highest point of travel. Under these conditions, the dose rate is less than 50 mrem/hr at the water surface.

After removal of the fuel from the reactor vessel, it is moved to the spent-fuel pit by the fuel transfer mechanism via the fuel transfer canal. The fuel transfer canal is a passageway connected to the reactor cavity and extending to the inside wall of the containment structure. The canal is formed by two shield walls extending upward to the same height as the reactor cavity. During refueling, the canal and the reactor cavity are flooded with water to the same height.

The spent-fuel pit in the fuel building is permanently flooded to provide approximately 7 feet of water above a fuel assembly when it is being withdrawn from the fuel transfer system. Water height above stored fuel assemblies is a minimum of 23 feet. The sides of the spent-fuel pit, three of which also form part of the fuel building exterior walls, are 6-foot-thick concrete to ensure a dose rate of no more than 2.5 mrem/hr outside the building.

Approximately 3 feet of concrete shielding is provided above and on each side of the fuel transfer tubes in the area between the reactor containment wall and the fuel building wall, and in the area between the reactor containment wall and the fuel transfer canal.

12.1.2.6 **Auxiliary Equipment Shielding**

The auxiliary components exhibit varying degrees of radioactive contamination due to the handling of various fluids. The auxiliary shielding protects operating and maintenance personnel working near the various auxiliary system components, such as those in the chemical and volume control system, the boron recovery system, the waste disposal system, and the sampling system. Controlled access to the auxiliary building is allowed during reactor operation. Major components of systems are individually shielded so that compartments may be entered without having to shut down and possibly decontaminate the entire system. Ilmenite concrete is used in certain shields.

Potentially highly contaminated ion exchangers and filters are located in the ion-exchange structure along the south wall of the auxiliary building. Each ion exchanger or filter is enclosed in a separate, shielded compartment. The concrete thicknesses provided around the shielded compartments are sufficient to reduce the dose rate in the surrounding area to less than 2.5 mrem/hr and the dose rate to any adjacent cubicle to less than 100 mrem/hr. The shielding thicknesses around the mixed-bed demineralizers are based upon a saturation activity that gives a contact radiation level of nearly 12,000 rem/hr.

In many areas, tornado-missile protection in the form of thick concrete affords more shielding than that required for radiation protection.

12.1.2.7 Waste Storage Shielding

The waste storage and processing facilities in the auxiliary building, decontamination building, and clarifier building are shielded to protect operating personnel in accordance with the radiation protection design bases set forth in Section 12.1.1.

Boron recovery tanks, which are used to store letdown before recycling to the station or processing as waste, are shielded to reduce dose rates to 2.5 mrem/hr in accessible areas. Boric acid storage tanks are located in the auxiliary building so that shielding may be installed if necessary during station operation.

The waste gas decay tanks are located in shielded cubicles, which are buried for missile protection. The resulting dose rate at the ground surface above the tanks is less than 0.75 mrem/hr.

Periodic surveys by Health Physics personnel using portable radiation detectors ensure that radiation levels outside the shield walls meet design specifications, and they establish access limitations within the shielded cubicles. In addition, continuous surveillance is provided in the waste solidification area of the decontamination building and in the control board area by area radiation monitors.

12.1.2.8 Accident Shielding

Accident shielding is provided by the reactor containment, which is a reinforced-concrete structure lined with steel. For structural reasons, the thicknesses of the cylindrical walls and dome are 54 inches and 30 inches, respectively. These thicknesses are more than adequate to meet the guideline limits of 10 CFR 50.67 at the exclusion boundary.

Additional shielding is provided for the main control room. This, together with the shielding afforded by its physical separation from the containment structure, ensures that an operator would be able to remain in the main control room for 30 days after an accident and not receive a dose in excess of 5 rem TEDE.

12.1.2.9 Boron Recovery Tank Shielding

The boron recovery tanks (see Section 12.1.2.7), are shielded to the height required for personnel protection on the site and to ensure that the dose rate at the exclusion boundary from direct radiation does not exceed the design dose rates as specified in Table 12.1-1.

12.1.2.10 Main Control Room Shielding

The main control room is shown in Figure 1.2-3 and on Reference Drawing 5.

The design basis for the control room envelope is that the radiation dose to personnel inside the control room envelope (from sources both internal and external to the control room envelope) be less than or equal to 5 rem TEDE for the 30 day duration of the design basis accident. The control room northern, western, and eastern walls are 2' thick concrete. The southern wall of the control room is 18" thick concrete. The southern wall of the cable vault is 2' thick concrete to

bring the total concrete shielding on the side of the control room facing the containment to 42". The ceiling for the control room is 2' thick concrete. The doorways to the control room are on the northern wall of the control room facing away from the containment structure and can be covered with radiation shielding doors. Based on NUREG-0800, Section 6.4 (Reference 8), this level of shielding allows the dose in the control room from containment shine and cloud shine to be treated as negligible.

Special consideration has been given to the design of penetrations and structural details of the main control room to establish an acceptable condition of leaktightness.

The air conditioning systems are installed within the spaces served and designed to provide uninterrupted service under accident conditions. On an emergency signal, the control room normal replenishment air and exhaust systems are isolated automatically by tight closures in the ductwork. Breathing-quality air is supplied from high-pressure storage bottles to maintain a small positive pressure in the main control room for the period of containment leakage. This pressure can be verified by differential pressure gauges reading the difference between the inside and outside pressure in inches of water. The main control and relay rooms are also provided with an emergency ventilation system fitted with particulate and impregnated charcoal filters to introduce cleaned outside air into the protected spaces on depletion of the high-pressure air. This can continue indefinitely to hold the area pressure above atmospheric pressure to ensure outflow leakage. A fan/filter unit is also started in recirculation during bottled air discharge to account for inleakage during control room access.

The radiation level in the main control room is measured by a fixed monitor to verify safe operating conditions. Portable monitors are available to provide backup to the fixed monitors.

As an additional precaution, personnel air packs are available in the control area.

12.1.2.11 **Shielding Review for NUREG-0578**

In response to the requirements of NUREG-0578, a design review was conducted using the Stone & Webster Engineering Corporation GAMTRAN1 computer code with inputs from the ACTIVITY-2 and RADIOISOTOPIC computer codes. The NRC-specified source terms were used. All systems designed to function after an accident were considered as sources, including safety injection, recirculation spray, hydrogen recombiner, sampling, auxiliary building sump, and drain lines. The letdown portion of the chemical and volume main control system was excluded because it is isolated and because its use in the post-accident situation would be unacceptable. All vital areas were identified and evaluated. Areas where continuous occupancy is required are the main control room, the technical support center, the counting room, the operational support center, and the security control center. Limited access is needed to such places as emergency power supplies and sampling stations.

All the NUREG-0578 Category A requirements have been satisfied at North Anna Units 1 and 2, as indicated by letter, A. Schwencer, NRC, to J. H. Ferguson, Vepco, dated April 23, 1980.

12.1.3 Source Terms

The total quantity of the principle nuclides in process equipment that contains or transports radioactivity is identified as a function of operating history in Chapter 11. Design and expected values of the radioisotopic inventory for both the reactor coolant and main steam systems are listed in Section 11.1. Design and expected values of the radioisotopic inventory for each portion of the radioactive liquid waste system are listed in Section 11.2.5 and for the waste gas decay tank in the gaseous waste disposal system in Section 11.3.5.

Table 11.1-11 lists the activities in the volume control tank using the assumptions summarized in Table 11.1-5. The activities in the pressurizer (both the liquid and vapor phases) are given in Table 11.1-13 using the assumptions summarized in Table 11.1-5. Saturation activities for demineralizer resins are listed in Table 11.1-13. Spent-fuel activities are listed in Table 11.1-4.

Process piping designated to carry significant amounts of radioactive materials is located behind shielding to minimize the radiation exposure of plant personnel. Pipe tunnels, chases, or shafts are provided as required to properly segregate radioactive piping behind shields. Where necessary, extension-stem-operated valves are used.

Concrete, exposed carbon steel, and galvanized carbon steel surfaces within the fuel, auxiliary, decontamination, and waste disposal buildings that require protective coatings and may be subject to decontamination are typically finished with epoxy, silicone alkyd, or urethane enamel protective coatings or approved equal. Stainless steel surfaces are not painted. Stainless steel is used extensively in the fuel, decontamination, and waste disposal buildings.

Tanks such as the high- and low-level waste tanks, evaporator bottoms tanks, fluid waste treating tank, and contaminated drain collecting tank have been designed to allow for cleaning and to minimize the buildup of radioactive material using the following factors:

1. These tanks are vertical cylindrical tanks with flanged and dished heads to allow complete draining.
2. The tank outlet lines are at the lowest point of the tank to aid in complete draining.
3. The tanks are of stainless steel construction to minimize corrosion and the buildup of activity and to facilitate cleaning.
4. The tanks are provided with inspection openings or manholes that can be used during cleaning.

Drip pan bedplates are provided under pumps. Individual equipment cubicles and pipe chases containing radioactive fluid system components and equipment have floor drains that are piped to and processed by the waste disposal system.

The sampling system uses small line sizes to maintain high velocity to keep particles in suspension in the fluid stream. The sample lines to the central sample points connect to recirculation lines to permit multivolume flushes of sample lines so that representative samples are drawn. Local check samples are available from the recirculation lines if needed.

12.1.4 Area Monitoring

12.1.4.1 Normal Plant Operations

The area radiation monitoring system reads out and records the radiation levels in selected areas throughout the station, and alarms (audibly and visually) if these levels exceed a preset value or if the detector malfunctions. Each detector reads out and alarms both in the main control room and locally. Each channel is equipped with a check source remotely operated from the main control room. Recorders produce a continuous, permanent record of radiation levels while the detectors are functioning. Area-radiation-monitoring channels for Unit 1 are powered from the 480V emergency bus 1H; channel monitoring systems or areas common to both units are powered from the emergency bus for either Unit 1 or Unit 2.

The area radiation monitors are designed for continuous operation. Continuous, as used to describe the operation of an area radiation monitor, means that the monitor provides the required information at all times with the following exceptions: (1) the monitor is not required to be in operation because of specified plant conditions given in the Technical Requirements Manual, or (2) the monitor is out of service for testing or maintenance and approved alternate monitoring methods are in place.

The monitor locations, shown on Reference Drawings 1, 2, and 6, give an early warning of high radiation levels when plant personnel enter various portions of the plant. To perform this function they are generally located near the main entrance pathway for a given building or portion thereof. In some areas they are located at the major work area involved. In all cases they provide a representative indication of the radiation level in that vicinity of the plant and not necessarily the maximum that might be measured against one of the nearby shield walls. The audio and visual alarm provides adequate warning to personnel in the event of an abnormally high radiation level. These monitors have remote displays in the main control room indicating the radiation levels throughout the plant, and they may be monitored before entry into potentially high radiation fields. When radioactive material is being handled within a given area, such as the decontamination building, the monitors provide a representative reading based on planned work areas for handling such material.

In addition, if the dose rate at the manipulator crane area monitor exceeds a preset value, the alarm automatically trips the containment's purge air supply and exhaust fan and closes the purge system butterfly valves, thus isolating the containment from the environment.

The alarm setpoint of each area monitor is variable, and it is set at a radiation level slightly above that of normal background radiation in the respective area. The monitoring equipment

consists of fixed-position gamma detectors and associated electronic equipment. These channels warn of any increase in radiation level at locations where personnel may be expected to remain for extended periods of time. The instruments and their ranges and locations are listed in Table 12.1-4.

Tests and calibrations of the radiation monitors are performed at intervals specified in the applicable Technical Procedures. Special restrictions, as specified in the Technical Requirements Manual, are imposed on plant operators or maintenance activities if the area monitors are not functional. The manipulator crane monitor is a control function and is part of a redundant alarm system with the containment gaseous and particulate monitors. If the manipulator crane monitor is not functional, the containment gaseous and particulate monitors can still function and can be backed up by local portable equipment. This portable equipment, together with Health Physics surveys during maintenance activities, will allow these activities to continue if a normal fixed area monitor is not functional.

The radiation monitors in the Fuel Building also provide a control function. When a Hi-Hi radiation condition is sensed by either of these monitors, during a fuel handling condition, the control room bottled air system will discharge, the control room normal ventilation will isolate, and the control room/emergency switchgear room emergency ventilation system will start automatically to recirculate and filter control room air.

12.1.4.2 **Post-Accident Conditions**

The containment high-range radiation monitoring system (CHRRMS) provides indication in the control room of containment radiation level as required by NUREG-0578, Section 2.1.8.b, and subsequent clarification contained in the NRC letter dated October 30, 1979.

Each containment has two redundant Class I monitor systems consisting of a high range detector (10^0 - 10^7 R/hr), a control room readout unit and associated interconnecting cable. The detectors are located approximately 155 degrees apart for Unit 1 and 130 degrees apart for Unit 2 on the inside crane wall to provide physical separation. The location also facilitates the periodic calibration of the detectors since they are close to the operating floor.

The CHRRMS components are qualified to IEEE-323-1974, IEEE-344-1975 and meet the requirements of Regulatory Guide 1.97, proposed Revision 2. The high range monitors are powered from diverse Class 1E vital buses. The indicators in the control room are installed in racks designed per the separation and seismic requirements of Regulatory Guide 1.75, Revision 1, and IEEE-344-1975 respectively.

The addition of the high-range containment radiation monitors is for indication purposes only and does not affect the logic schemes of any safety-related systems.

The Technical Support Center (TSC) and Local Emergency Operations Facility (LEOF) radiation monitoring systems are localized systems and satisfies the guidelines established in

NUREG-0696. The radiation monitoring system components consist of a particulate, iodine, and noble gas monitor and two area monitors.

These monitoring systems provide continuous indication of the dose rate and airborne activity in the TSC and LEOF during an emergency, as well as alerting personnel of adverse conditions. These systems are totally contained within the TSC and LEOF and are in no way connected to the control room or any safety-related systems.

12.1.5 Operating Procedures

A radiation protection program consistent with the requirements of 10 CFR 20 and designed to ensure that doses are kept ALARA is maintained. Applicable HP procedures, (i.e. RWPs), are used to control access to all radiation and contaminated areas.

The station auxiliary systems containing radioactive fluids are designed for remote operation by the use of extensive instrumentation for monitoring, remotely operated pneumatic or electrical control valves, and manually operated valves with extension stems that allow the operator to operate the valves while behind shield walls.

Special tools are used extensively for fuel handling. These tools and processes are described in Section 9.1.4.

The operation of the filter transfer shield, which is used for the handling of spent filter cartridges, is described in Section 11.5.3. This transfer shield is of lead and steel construction and functions only as a transfer and temporary storage device.

A lead shield beneath the neutron shield tank in the containment protects personnel during the servicing of the neutron detectors. This shield is described in Section 12.1.2.1.

A neutron detector carriage provides both distance and material shielding during the changing of the neutron detectors.

Persons or groups entering areas of high radiation are equipped with radiation-monitoring devices. A person entering an area in which the radiation is greater than a predetermined level is accompanied by, or is in constant communication with, at least one other person.

12.1.6 Dose Rate Calculations

To indicate the methods used to determine dose rates, two sets of calculations are described below.

12.1.6.1 Sample Sink Area

The receptors for the sampling sink are located just off the surface of the concrete wall behind the sinks. Two sources of radiation are considered to be significant in this area: the sample piping, located in a pipe space behind the wall at which the sampling sinks are located; and the

volume control tanks, located in individual cubicles behind the pipe space, as shown in Figure 12.1-2 Sh. 3.

The volume control tanks are separated by a 2-foot-thick concrete wall. Concrete density of this and other concrete walls is 146 lb/ft^3. On the sampling sink side of the volume control tank, the cubicle wall is 2.5-foot-thick concrete. The distance from the axial centerline of a volume control tank to the surface of the sampling sink wall is approximately 18.5 feet.

Each volume control tank was approximated as a source by two right circular cylinders 84 inch in diameter with 0.25-inch steel walls, with liquid volume of 120 ft^3 and gaseous volume of 180 ft^3.

The sample piping primarily consists of 3/4-inch or smaller tubing containing process fluids. The piping is located behind an 18-inch concrete wall. For the purpose of this analysis, the maze of pipes was approximated by four disks side-by-side along the wall behind the sampling sinks, each 0.75 inch thick and 6 feet in diameter. Each disk was assumed to be covered by a steel plate of minimal thickness to represent the pipe wall thickness.

A reduction factor was applied to the source intensity to account for the piping density. Although the fluid in the pipes comes from many different process streams, the conservative assumption was made that all pipes contained primary coolant samples drawn from the hot leg of the coolant loop. Primary coolant activities are listed in Table 11.1-6.

The computer code GAMTRAN described in 12.1.6.3 was used to calculate the dose rate from each source. At a receptor located on the line passing through the center of the disk representing the sample pipes and coincident with the disk axis and intersecting the cylindrical axis of one of the volume control tanks, the dose rate was calculated to be 4.1 mrem/hr. Of the total, the sample piping contributed approximately 97%.

12.1.6.2 **Valve-Operating Area Outside Demineralizer Cubicle**

In the valve-operating area outside the demineralizer cubicle on the 244-foot level of the auxiliary building, typical receptor locations were chosen at 3- and 6-foot heights above the 244-foot level, lying on a plane perpendicular to the vertical shield wall, passing through the cylindrical axis of the mixed-bed demineralizer, and at the outside surface of the shield wall.

The mixed-bed demineralizer was chosen as the source because it is the most radioactive source in the area and because the concrete shielding between the mixed-bed demineralizer and the receptors is the same thickness as that between other demineralizers.

The mixed-bed demineralizer is assumed to be a right circular cylinder source inside a 5/16-inch mild steel shield with source strengths based on Surry Power Station source data corrected to North Anna power level.

The volume of the demineralizer resin is assumed to be 39 ft^3 with a height of 7.13 feet.

A 2-foot-thick concrete wall extends vertically from Elevation 244 to the floor below the demineralizer cubicle. Above the floor, the wall is 4-foot-thick concrete. The floor of the demineralizer cubicle is 2-foot-thick concrete. Concrete density in all cases is taken as 146 lb/ft^3.

The computer code GAMTRAN, described below, was used to calculate the dose rates at the receptors. Calculated dose rates at each receptor were less than 1 mrem/hr from the mixed-bed demineralizer.

12.1.6.3 **GAMTRAN Computer Code**

The GAMTRAN code is a Stone & Webster developed point kernel code for shield design analysis. The gamma ray attenuation coefficients used in GAMTRAN are generated using the OGRE (Reference 1) pair production and photoelectric cross sections. The Compton scattering component is calculated by the Klein-Nishina equation.

Gamma ray buildup factors are generated by a two-parameter formula based on the work of Berger (Reference 2) and Chilton (Reference 3). The parameters used for the buildup factors are based on data from the *Weapons Radiation Shielding Handbook* (Reference 4). Flux-to-dose conversion factors were based on curves in the *Reactor Shield Design Manual* (Reference 5).

12.1.7 Estimates of Exposure

Radiation shielding is provided on the basis of maximum concentrations of radioactive materials within each shielded region (e.g., 1% failed fuel) rather than the annual average values. For batch processes, as an example, the point of the highest radionuclide concentration in the batching process (e.g., just before draining a tank) is assumed. The shielding designs are therefore intentionally conservative in that the dose rates reflect maximum rather than average sources to be shielded.

The design objectives of the plant shielding for normal operation in terms of maximum dose rates allowed at in-plant locations are given in Table 12.1-1. It is expected that the average dose rates would be less than 20% of these values.

Shielding thicknesses were calculated using the Stone & Webster code GAMTRAN described in Section 12.1.6.3. Table 12.1-5 lists the densities of the materials used for shielding calculations. Care was taken to ensure that the material actually used for construction was at least as dense as that used for analyses. Figures 12.1-6, 12.1-8, and 12.1-9 show the shielding arrangement for the containment. Arrangements for the other buildings are shown in Section 1.2. Supplementary neutron shielding is discussed in detail in Appendix 12A.

12.1.7.1 **Considerations for Dose Predictions**

It is general practice to arrive at the radiation zoning by taking liberal estimates of the time to be spent in each zone and dividing this into 100 mrem/week to arrive at a design value in terms of mrem/hr that will not be exceeded in that zone, even under worst-case conditions. The shielding is then designed assuming maximum conditions to ensure that these exposure values are

never exceeded under normal operating conditions. (Higher doses may result from specific repair jobs when shielding is not possible.)

The radiation zone designations are shown in Figures 12.1-1 through 12.1-5. These delineate the maximum dose rates at all locations within the major buildings of North Anna Units 1 and 2.

Because of the conservatism employed in performing the worst-case dose rate calculations, the shielding is conservatively designed, thus ensuring that the average exposures in each zone will be far less than the maximum.

To compute the expected man-rem values per zone and throughout the plant, the following items should be considered:

1. Time-and-motion study data must be obtained to allocate time spent in each zone in the plant such that the sum of these times equals the total time the employee is at the station in an average year.
2. An “average employee” concept would not apply because some employees never go in some zones, whereas others frequently spend time in these zones.
3. Once in a zone, movement within the zone must be considered.
4. The innumerable large and small components in each zone that act as object shields would have to be factored into the dose assessment. This would complicate the analytical models and require several times the man-months required presently to perform the worst-case type of analysis in which such component object shielding is conservatively ignored.
5. Similarly, a number of components located in the regions being shielded would also have to be included in the modeling to compute expected values. Most of them are conservatively left out of the worst-case analysis.
6. Conservatism in sources (e.g., 1% failed fuel design defect versus 0.2% expected) would have to be eliminated to predict expected dose rates.
7. Explicit margins in other source terms would have to be factored out of the analysis.
8. In the worst-case model, each source is assumed to be at maximum levels. This assumes all other sources in that system are at minimum levels. Viewed plant wide, however, an activities balance would have to be used for average expected conditions.
9. Much more complicated mathematical models of large components would have to be developed to replace the few region models which are presently used to intentionally overestimate the emanation of radiation from these large sources.

A man-rem analysis cannot be computed with sufficient accuracy to obtain good data of a predictive nature. However, sufficient operating data on similar plants do exist to provide estimates of man-rem doses for the station as a whole. This operating experience is demonstrative

of the fact that the radiation shielding is conservatively designed. This is a direct result of the design of shields for worst-case conditions, conservative dose rate calculations, and implicit and explicit designer's margins.

12.1.7.2 **Reports From Other Plants**

Relative to the estimations of exposure levels during maintenance, refueling, and inservice inspection activities, such estimates do not lend themselves to prediction analysis based on an analytical modeling. Reliance should be placed on operating experience at other stations as the most reasonable source of such data. In this connection, Vepco's engineers participated in the efforts of the Atomic Industrial Forum's Task Force on Occupational Exposures.

One survey reported by Charlesworth (Reference 6) at the April 1971 American Power Conference covered data obtained at seven operating water-cooled reactor plants with a total plant worker dose of 1700 man-rem during the previous year for an average of 244 man-rem/yr per plant. In this survey, it was found that on an average 75% of these exposures were estimated to have been received during shutdown operations.

Another survey by Goldman (Reference 7) summarizes the results of 27 plant-years of operation from operating reports. This survey indicated a range of 0.5 to 2.3 rem/yr with limited data on the number distribution of staff in several exposure categories. From these data, Goldman concluded that 19 plant-years of operating data resulted in an in-plant population average of 238 man-rem per plant-year. These results are close to the 244 man-rem per plant-year reported by Charlesworth.

The average dose rate level in the visitor's center will be less than 0.01 mrem/hr above natural background based on the worst-case assumption. Assuming that a visitor will spend 4 hours at the visitor's center four times per year, he would receive a dose of less than 0.16 mrem/yr.

The expected annual doses to onsite personnel are governed by the controls imposed by the station supervision and/or Health Physics personnel. However, dose estimates for in-station personnel for routine operation are expected to parallel those reported from operating plant experience as discussed above.

Extensive radiation shielding is provided based on the maximum concentration of radioactive materials within each shielded region rather than on annual average values. The shielding and occupancy zones for normal operation are intentionally very conservative so that the normally received dose rates should be less than 10% of the limits specified in 10 CFR 20.

The highest level of personnel exposure is expected to occur during shutdown and maintenance periods on systems containing items such as coolant purification filters, cleanup and radwaste demineralizers, ion-exchange resins, charcoal adsorber units, and solid-radwaste-handling components. Since this is the case, the plant shielding and machinery locations have been designed to provide maximum laydown space, maximum working room, and

minimum time required to perform operations consistent with the reasonable operation of the plant. Experience gained in the operation of nuclear plants has been factored into these designs with the objective of minimizing the total man-rem exposure to plant personnel.

12.1.7.3 **Dose From Stored Waste**

For the purpose of a conservative analysis, it is assumed that 1 Ci of cobalt-60 equivalent is stored in the low-level contaminated storage area (Reference Drawing 4). The dose rates at the various distances, including the site boundary, per curie of cobalt-60 equivalent, are presented in Figure 12.1-10. No credit is taken for the drum shielding and self-shielding of the waste stored outside the building.

12.1.7.4 **Health Physics Area Dose Evaluation**

The Health Physics office, counting room, and monitoring area complex in the service building is, under normal operating conditions, a continuous access area. The only anticipated radioactive sources in this area are radioactive samples brought in for analysis and radioisotopes used in analytical equipment such as radiation monitoring equipment. Therefore, any radiation doses received while in this area will be controlled by adherence to standard health physics practices for handling radioactive material. Shielding design for the station as a whole ensures that contributions from other station areas do not exceed the design levels for their respective areas and make no significant contribution to the service building dose rate.

12.1 REFERENCES

1. Oak Ridge National Laboratory, *OGRE - General Purpose Monte Carlo Gamma Ray Transport Code System*, RSIC Code Package CCC-46, Oak Ridge, Tennessee, 1967.
2. M. J. Berger, in *Proceedings of Shielding Symposium*, U.S. Naval Radiological Defense Laboratory, Reviews and Lectures No. 29, p. 47.
3. A. B. Chilton, D. Holoviak, and L. K. Donovan, *Interior Report Determination of Parameters in an Empirical Function for Buildup Factors for Various Photon Energies*.
4. P. N. Stevens and D. K. Trubey, *Weapons Radiation Shielding Handbook: Chapter 3 - Methods for Calculating Neutron and Gamma Ray Attenuation*, DNA-1892-3, Defense Nuclear Agency, Washington, D. C., March 1972.
5. T. Rockwell, III, ed., *Reactor Shield Design Manual*, TID-7004, United States Atomic Energy Commission, March 1956.
6. D. G. Charlesworth, *Water Reactor Plant Contamination and Decontamination Requirements*, survey conducted by the Subcommittee on Nuclear Systems, ASME Research Committee on Boiler Feedwater Studies, presented at the 33rd Annual Meeting of the American Power Conference, Chicago, April 1971.

7. M. I. Goldman, *Radioactive Waste Management and Radiation Exposure*, *Nuclear Technology*, Vol. 14, May 1972.

8. Standard Review Plan 6.4, *Control Room Habitability System,* 1981.

12.1 REFERENCE DRAWINGS

The list of Station Drawings below is provided for information only. The referenced drawings are not part of the UFSAR. This is not intended to be a complete listing of all Station Drawings referenced from this section of the UFSAR. The contents of Station Drawings are controlled by station procedure.

	Drawing Number	Description
1.	11715-FK-9B	Instrument Piping, Radiation Monitoring, Sheet 2, Units 1 & 2
2.	11715-FK-9A	Instrument Piping, Radiation Monitoring, Sheet 1, Units 1 & 2
3.	11715-FY-1B	Site Plan, Units 1 & 2
4.	11715-FY-1A	Plot Plan, Units 1 & 2
5.	11715-FE-27B	Arrangement: Main Control Room, Elevation 276'- 9", Units 1 & 2
6.	11715-FK-9C	Instrument Piping, Radiation Monitoring, Sheet 3, Units 1 & 2

Table 12.1-1
RADIATION ZONE CRITERIA

Zone	Access	Maximum Dose Rate (mrem/hr)	Typical Locations
Full-Power Operation			
I	Continuous	0.75	Main control room, outside surface of containment, and all turbine plant and administration areas
II	Periodic	2.5	Passageways of auxiliary and fuel buildings, in general, and inside reactor containment personnel lock
III	Limited	15	Outside surface of shielded tank cubicles
IV	Controlled	100	Annulus between crane wall and containment wall
V	Restricted	Over 100	Inside shielded equipment compartments
Hot Shutdown (after 15-min decay)			
III	Limited	15	Reactor containment above operating floor; outside of crane wall
V	Restricted	Over 100	Inside shielded equipment compartments
Cold Shutdown for Maintenance (after 8-hr decay)			
II	Periodic	2.5	Reactor containment above operating floor and outside of crane wall
V	Restricted	Over 100	Inside shielded equipment compartments
Cold Shutdown for Refueling			
II	Periodic	2.5	Reactor containment above operating floor, outside of crane wall, and adjacent to fuel transfer canal near incore instrumentation devices
V	Restricted	Over 100	Inside shielded equipment compartments
Surface of water over raised fuel assembly		50	Above fuel assembly when over upender or racks

Table 12.1-2
CONTAINMENT SHIELDING SUMMARY

Symbol	Figure	Shield Description	Material [a]	Thickness (in)
A	12.1-8	Neutron shield tank	Water Steel	34 3
B	12.1-8	Primary shield	Concrete	54
	12.1-7	Supplementary neutron shield	Permali	6
E	12.1-8	Neutron shield tank support	Steel Lead	1.5 2
F	12.1-6 and 12.1-8	Cubicle - crane support wall	Concrete	33
F	12.1-8	Shielding beams	Concrete	24
G	12.1-8	Crane support wall	Concrete	24
H	12.1-6 and 12.1-8	Containment wall	Concrete	54
I	12.1-8	Containment dome	Concrete	30
J	12.1-8	Floor elevation 243 ft	Concrete	42 - 48
K	12.1-8	Operating floor	Concrete	24
L	12.1-6 and 12.1-8	Refueling cavity wall	Concrete	42
M	12.1-8 and 12.1-9	Control-rod drive missile shield	Concrete	24
N	12.1-8	Refueling cavity water	Water	108
O	12.1-8 and 12.1-9	Removable block wall Facing personnel hatch All others	 Concrete Concrete	 18 12
P	12.1-6	Fuel transfer canal wall (containment structure)	Concrete	54
Q	12.1-6	Fuel transfer canal wall (containment structure)	Concrete	72
R	12.1-6	Fuel transfer tube shielding	Concrete	36 (min)
S	12.1-6	Fuel transfer canal wall (fuel building)	Concrete	72
T	12.1-6	Incore instrumentation cubicle wall	Concrete	42

a. All poured concrete is reinforced with steel.

Table 12.1-2 (continued)
CONTAINMENT SHIELDING SUMMARY

Symbol	Figure	Shield Description	Material [a]	Thickness (in)
U	12.1-6	Cubicle wall	Concrete	36
V	12.1-6	Regenerator heat exchanger wall	Concrete	24
W	12.1-6	Cable vault wall	Concrete	24
X	12.1-6	Auxiliary feed pump wall	Concrete	36
Y	12.1-6	Safeguards area wall	Concrete	12
Unit 2 only				
Z	12.1-8	Incore sump room drain	Steel	3 1/2

a. All poured concrete is reinforced with steel.

Table 12.1-3
N-16 AND ACTIVATED CORROSION PRODUCT ACTIVITY

Isotope	Activity (μCi/cc @ 577°F)
Mn-54	5.6×10^{-4}
Mn-56	2.1×10^{-2}
Fe-59	7.5×10^{-4}
Co-58	1.8×10^{-2}
Co-60	5.4×10^{-4}
N-16 [a]	73.3

a. At the reactor vessel outlet nozzle at 2910 MWt.

Table 12.1-4
AREA RADIATION MONITORING LOCATIONS, NUMBER AND RANGES

Channel Location (number)	Range (mrem/hr)
Reactor containment area - low range (2) (1/2-RM-RMS-163/263)	10^{-1}—10^{4}
Personnel hatch area (2) (1/2-RM-RMS-161/261)	10^{-1}—10^{4}
Manipulator crane (2) (1/2-RM-RMS-162/262)	10^{-1}—10^{4}
Incore instrumentation transfer area (2) (1/2-RM-RMS-164/264)	10^{-1}—10^{4}
Decontamination area (1) (1-RM-RMS-151)	10^{-1}—10^{4}
New fuel storage area (1) (1-RM-RMS-152)	10^{-1}—10^{4}
Fuel pit bridge (1) (1-RM-RMS-153)	10^{-1}—10^{4}
Auxiliary building area (1) (1-RM-RMS-154)	10^{-1}—10^{4}
Waste solidification area (1) (1-RM-RMS-155)	10^{-1}—10^{4}
Sample room (1) (1-RM-RMS-156)	10^{-1}—10^{4}
Main control room (1) (1-RM-RMS-157)	10^{-1}—10^{4}
Laboratory (1) (1-RM-RMS-158)	10^{-1}—10^{4}
Technical Support Center (2) (1-RM-RMS-184/185/186)	10^{-1}—10^{4}
Local Emergency Operations Facility (2) (1-RM-RMS-187/188/189)	10^{-1}—10^{4}

Table 12.1-5
MATERIALS USED FOR SOURCE AND DOSE RATE CALCULATIONS

Material	Density (lb/ft^3)
Ilmenite concrete	240
Ordinary concrete	146
Steel	490.5
Lead	707.6
Air, steam, or vapor	0.075
Water	
Pressurized reactor coolant	46
All other	62.4
Core	273.4

Figure 12.1-1 (SHEET 1 OF 8)
RADIATION ZONES CONTAINMENT STRUCTURE

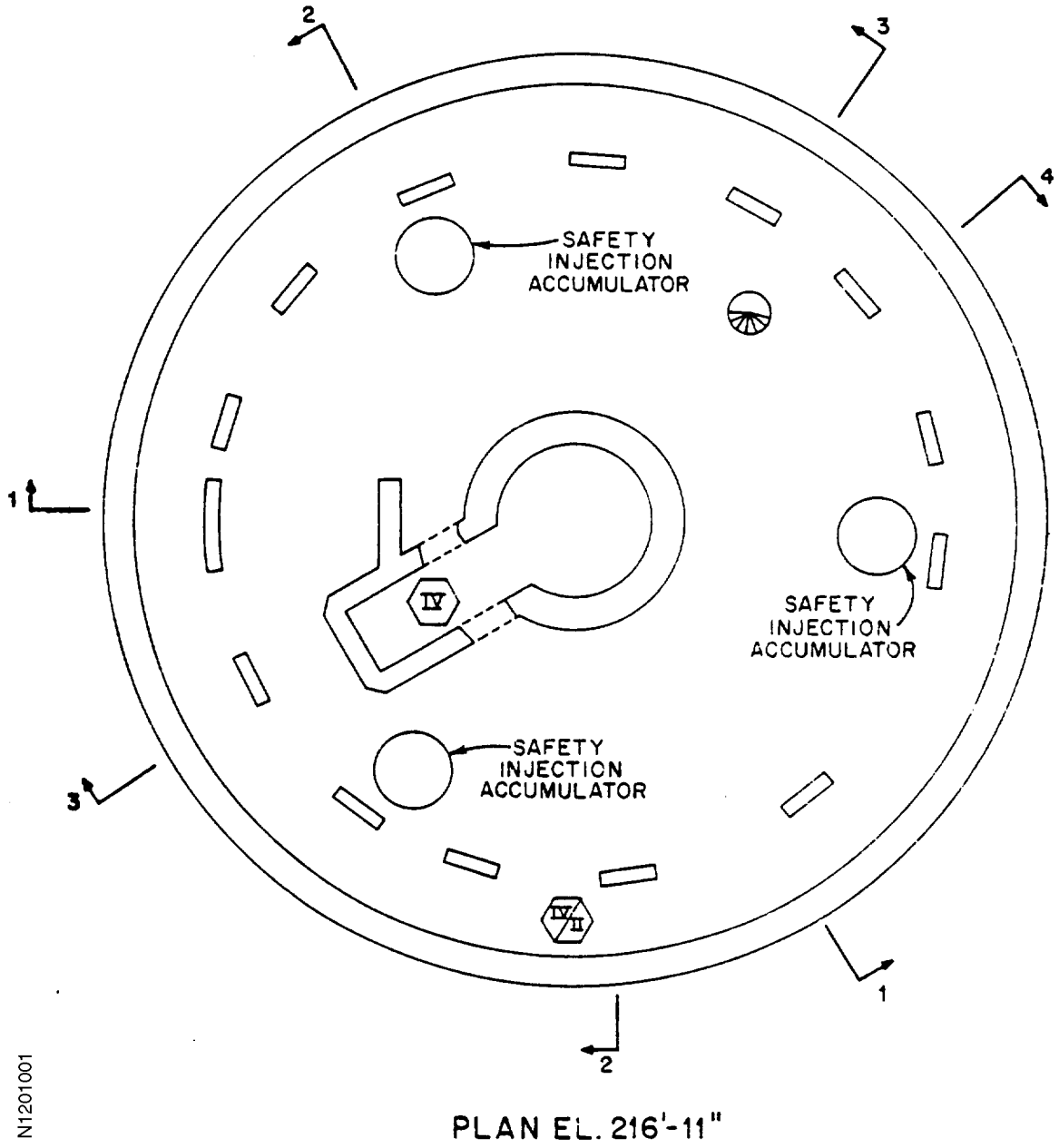

Figure 12.1-1 (SHEET 2 OF 8)
RADIATION ZONES CONTAINMENT STRUCTURE

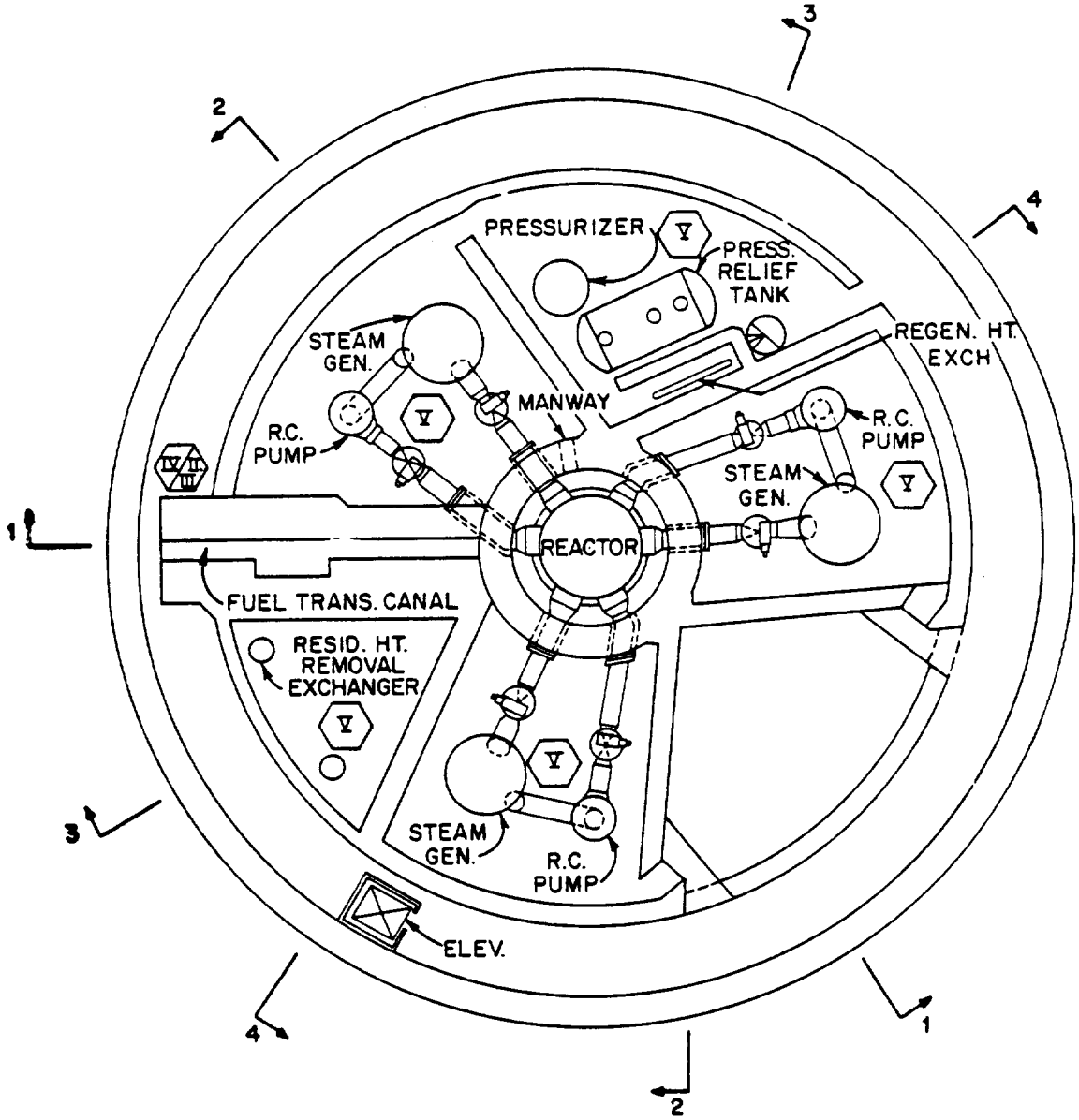

N1201002

PLAN EL. 241'-0"

Figure 12.1-1 (SHEET 3 OF 8)
RADIATION ZONES CONTAINMENT STRUCTURE

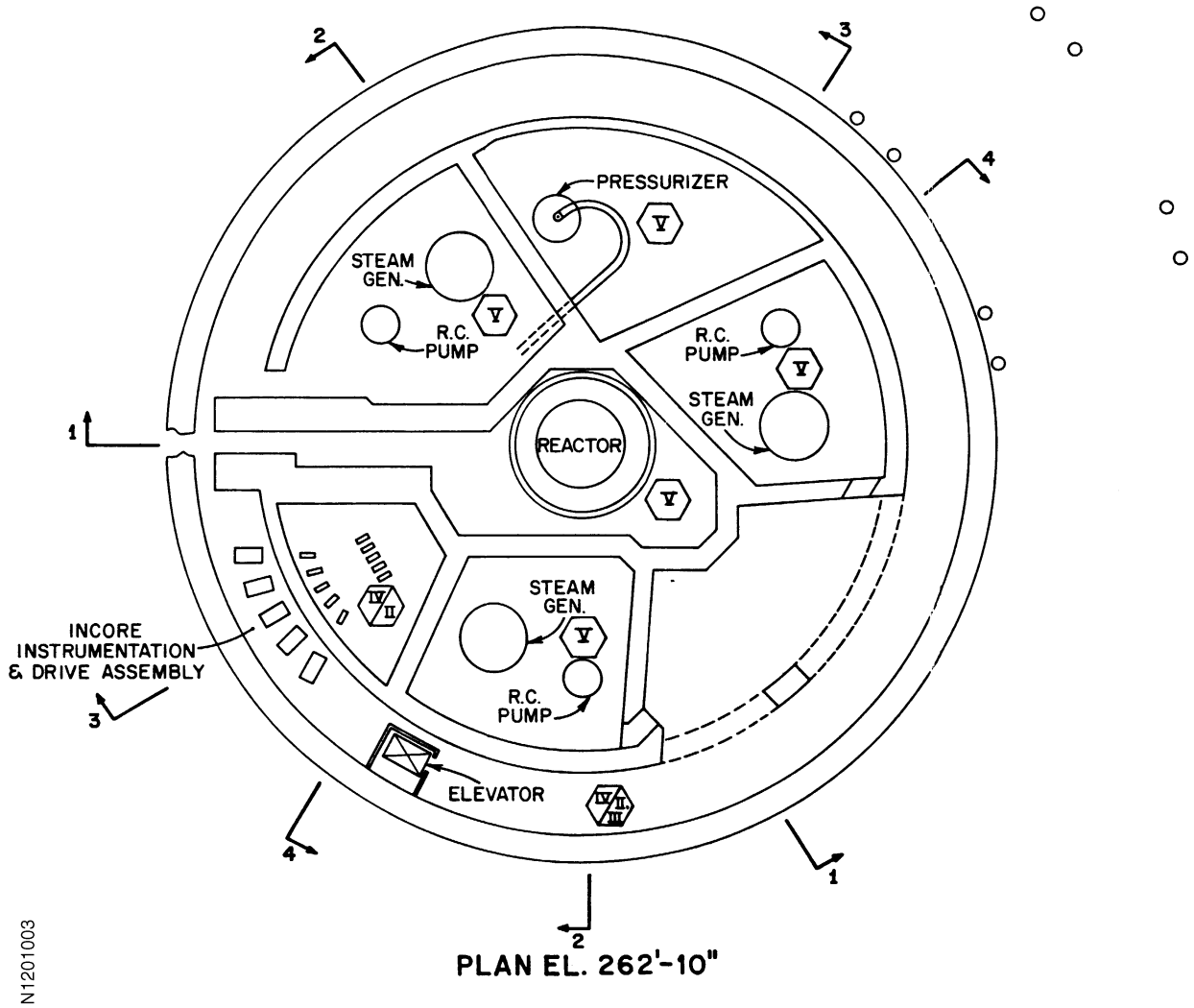

Figure 12.1-1 (SHEET 4 OF 8)
RADIATION ZONES CONTAINMENT STRUCTURE

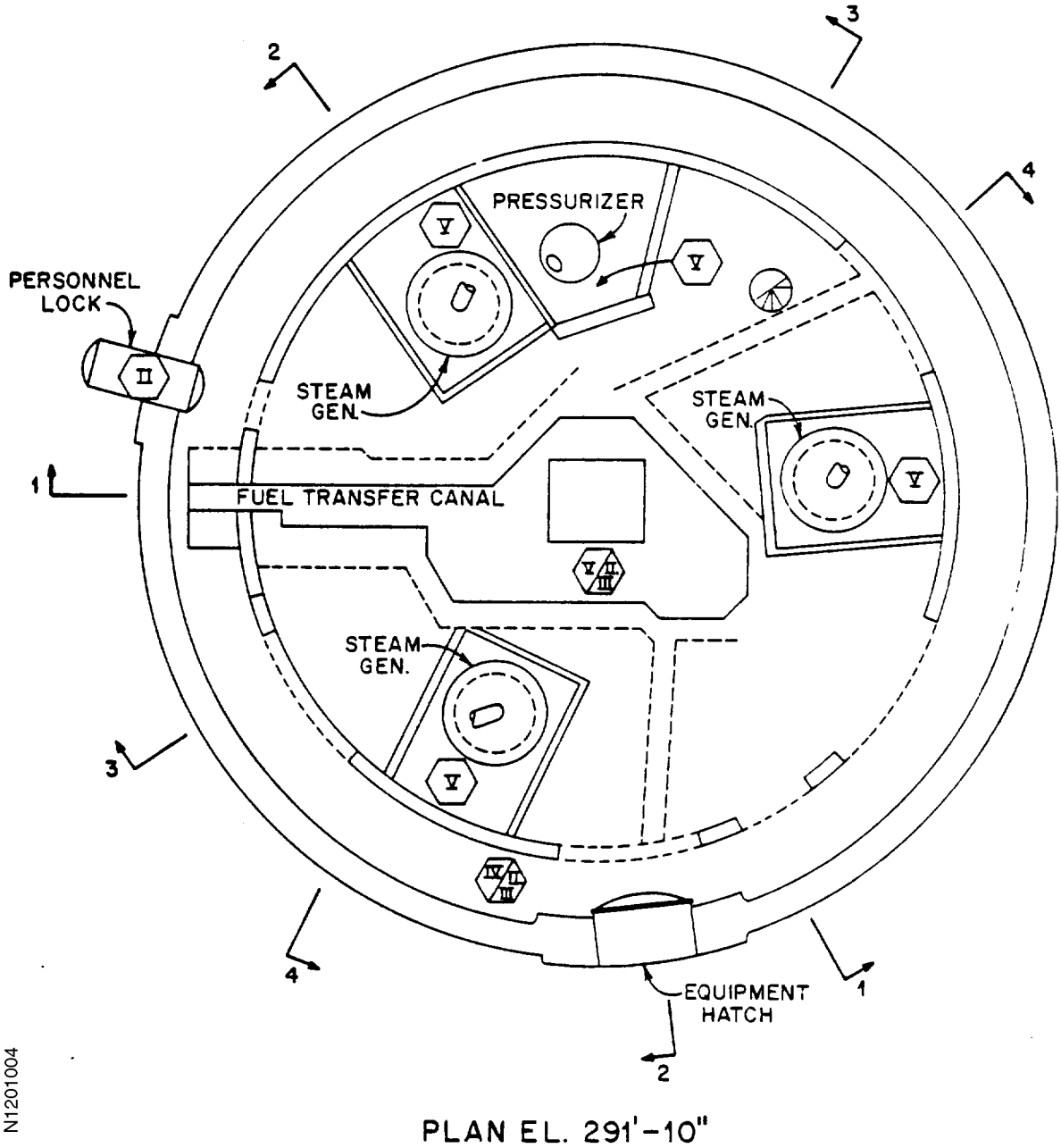

Figure 12.1-1 (SHEET 5 OF 8)
RADIATION ZONES CONTAINMENT STRUCTURE

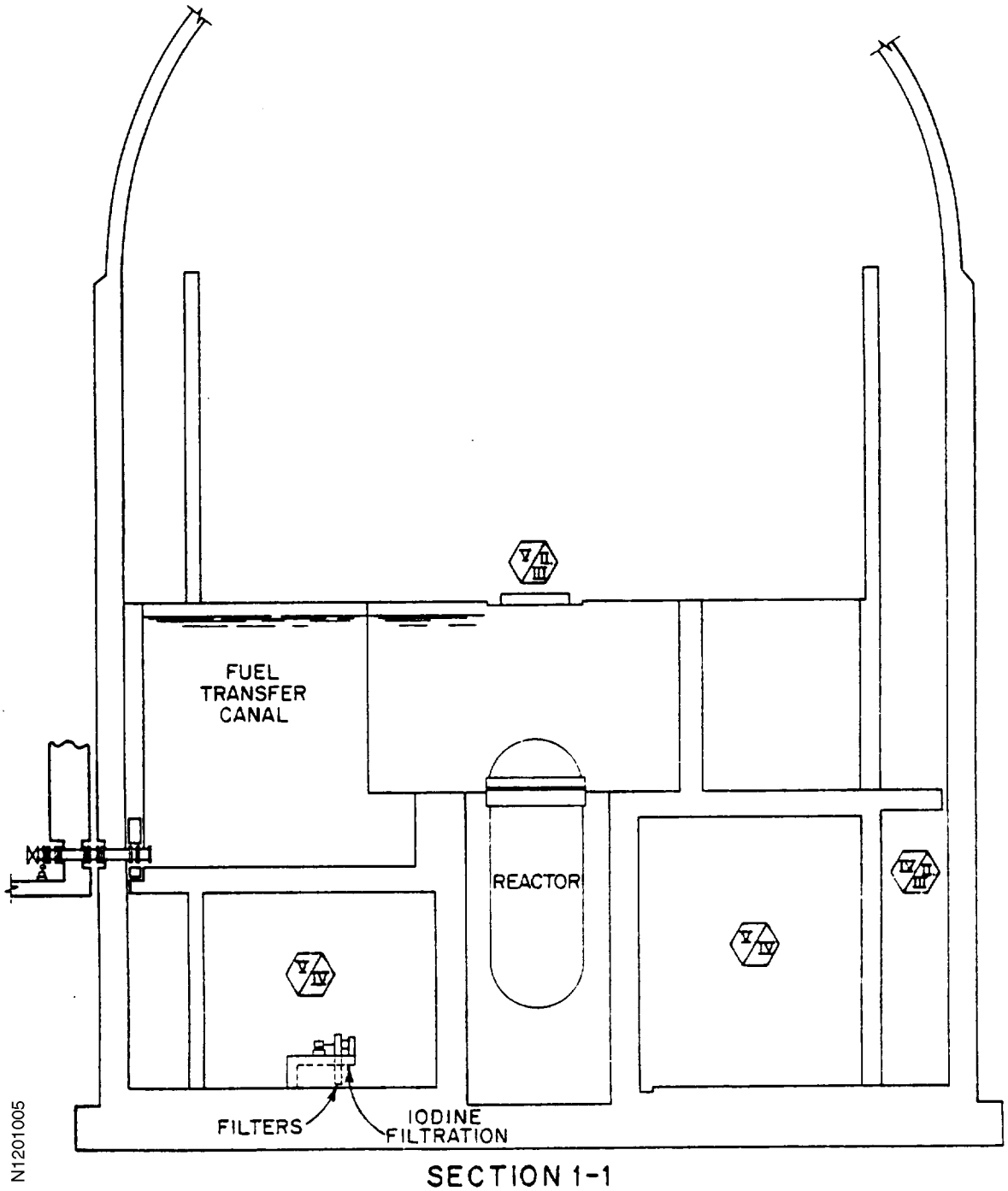

Figure 12.1-1 (SHEET 6 OF 8)
RADIATION ZONES CONTAINMENT STRUCTURE

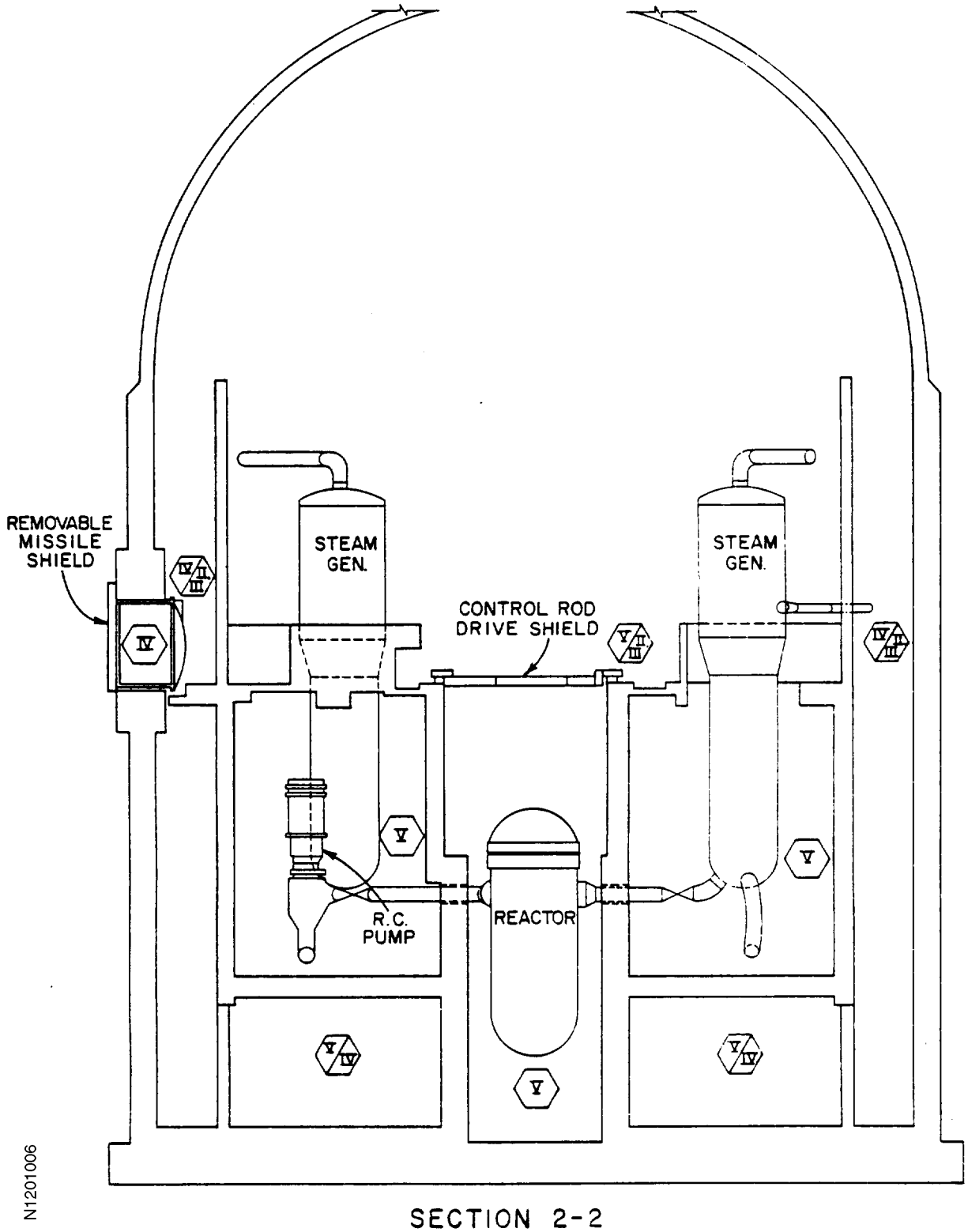

Figure 12.1-1 (SHEET 7 OF 8)
RADIATION ZONES CONTAINMENT STRUCTURE

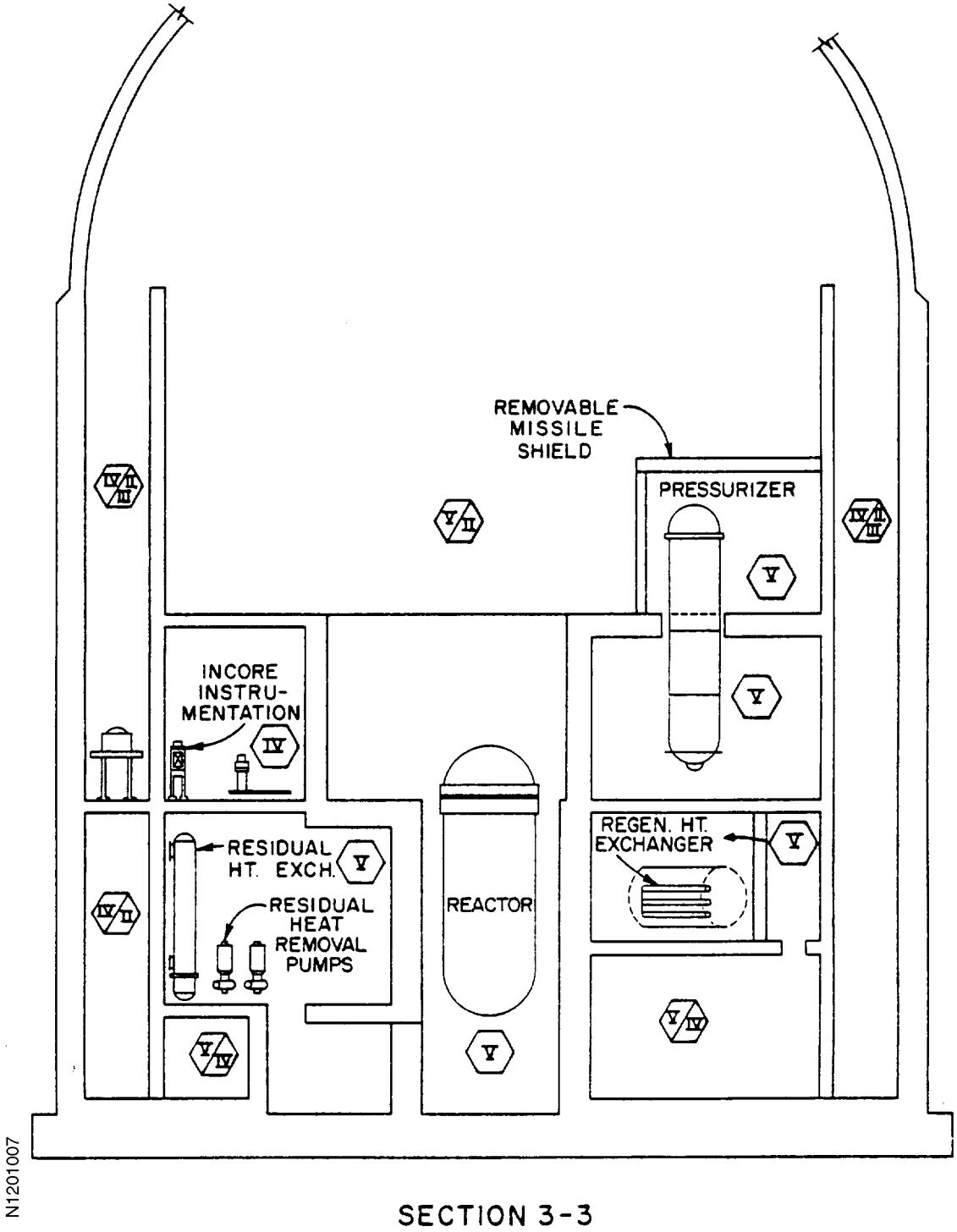

Figure 12.1-1 (SHEET 8 OF 8)
RADIATION ZONES CONTAINMENT STRUCTURE

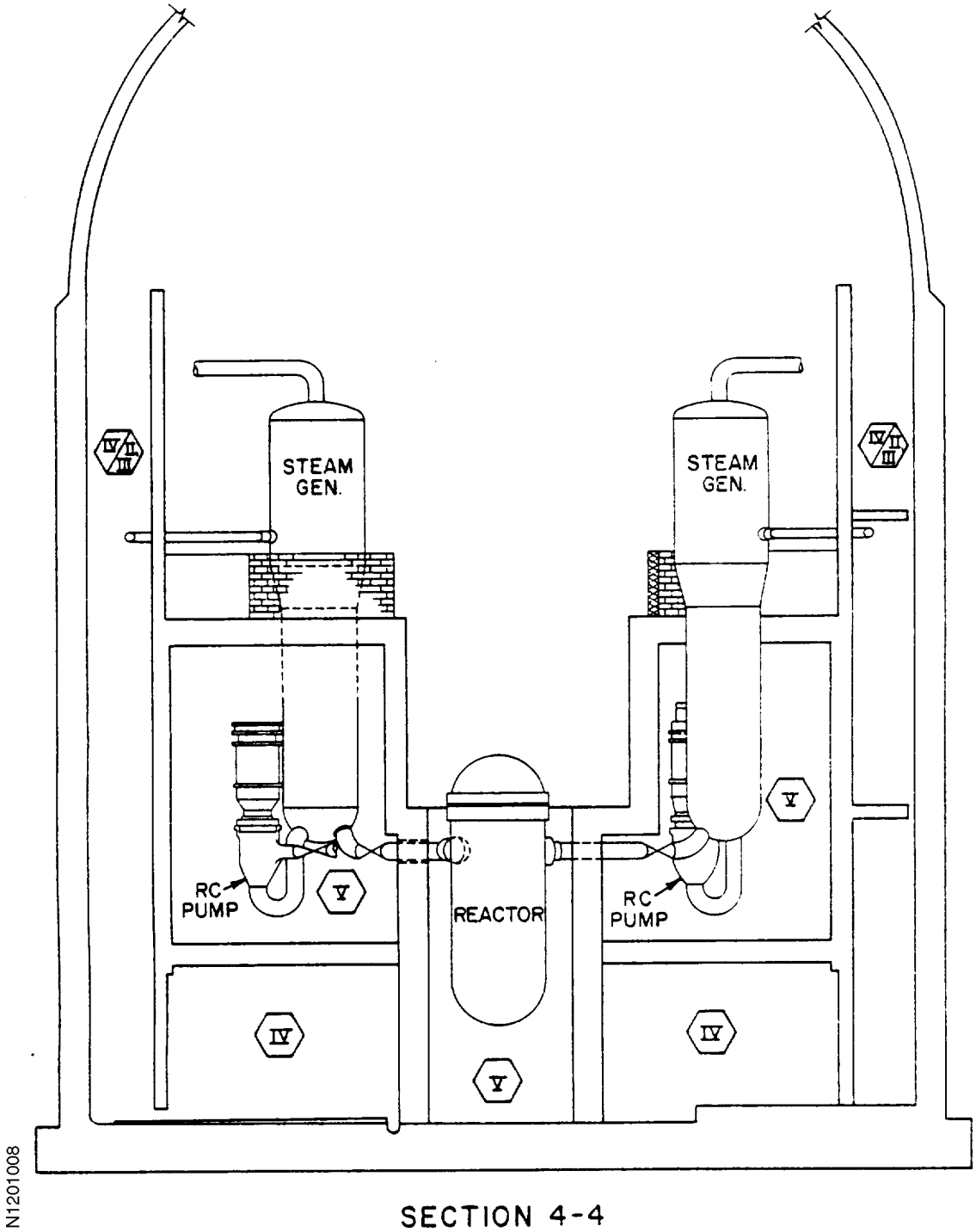

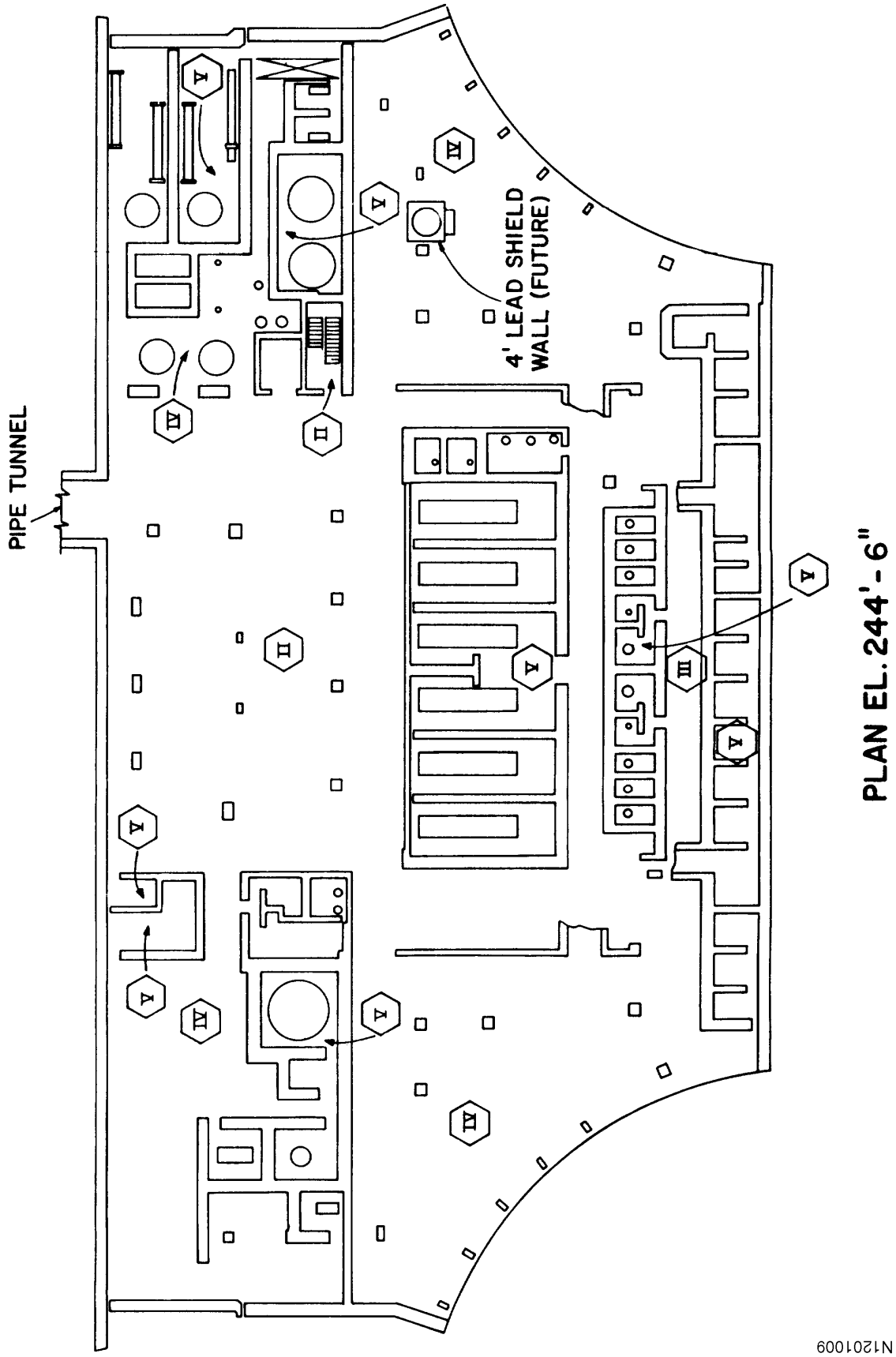

Figure 12.1-2 (SHEET 1 OF 3)
RADIATION ZONES AUXILIARY BUILDING

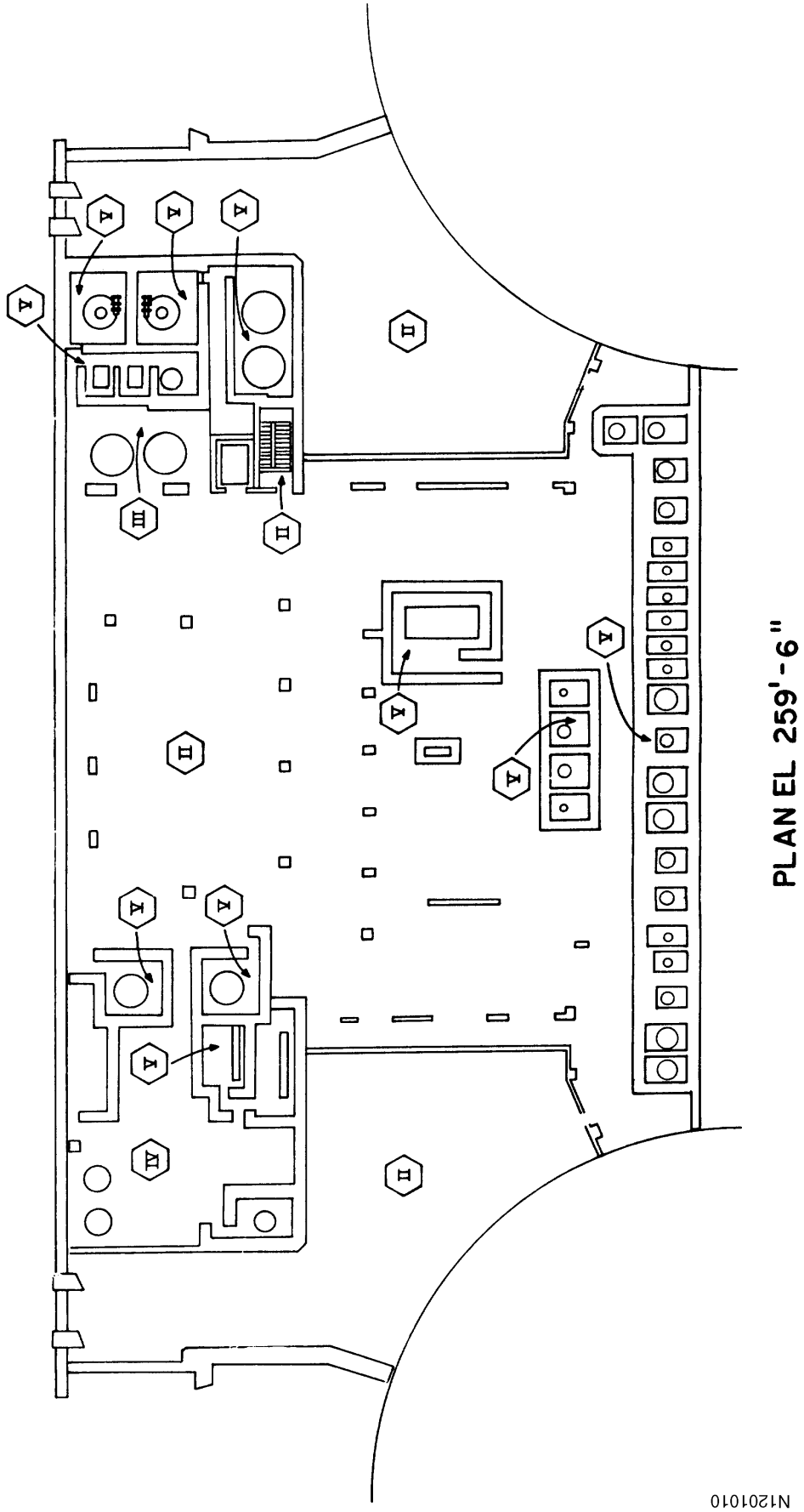

Figure 12.1-2 (SHEET 2 OF 3)
RADIATION ZONES AUXILIARY BUILDING

Figure 12.1-2 (SHEET 3 OF 3)
RADIATION ZONES AUXILIARY BUILDING

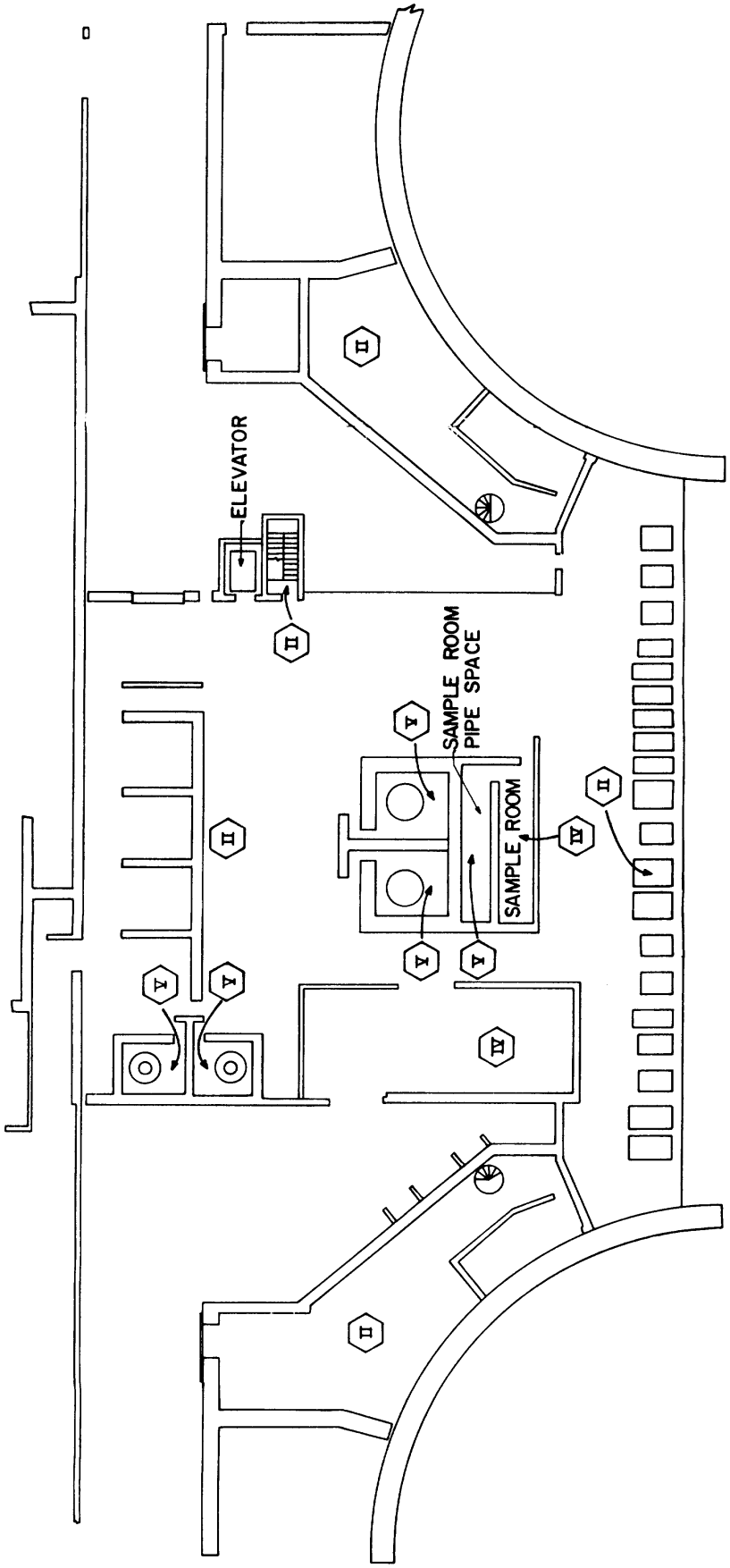

Figure 12.1-3 (SHEET 1 OF 2)
RADIATION ZONES FUEL BUILDING

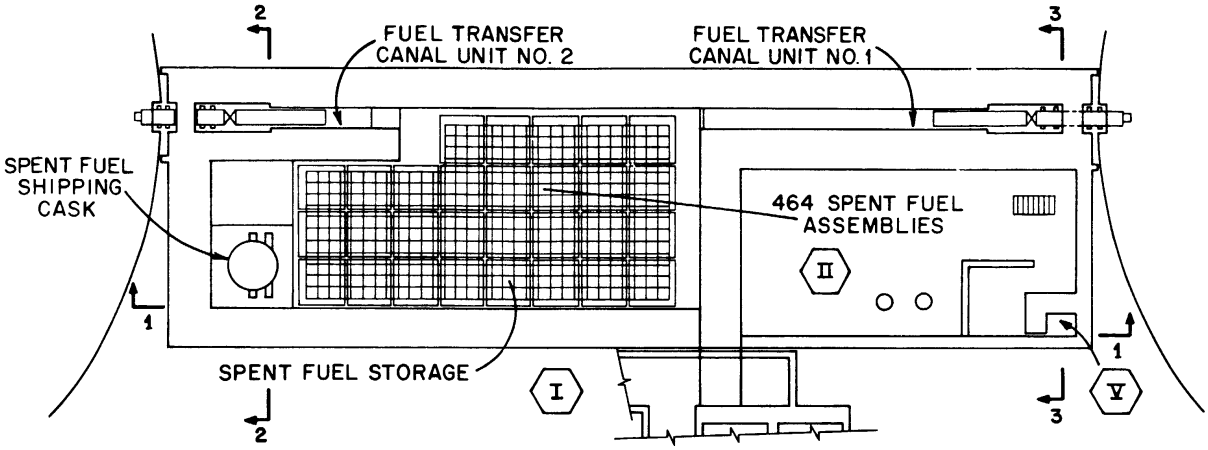

PLAN EL. 249'-4"

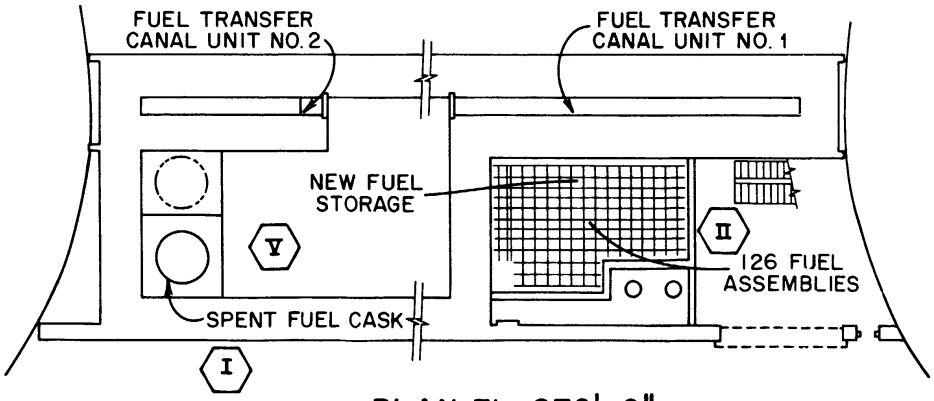

PLAN EL. 272'-0"

N1201012

Figure 12.1-3 (SHEET 2 OF 2)
RADIATION ZONES FUEL BUILDING

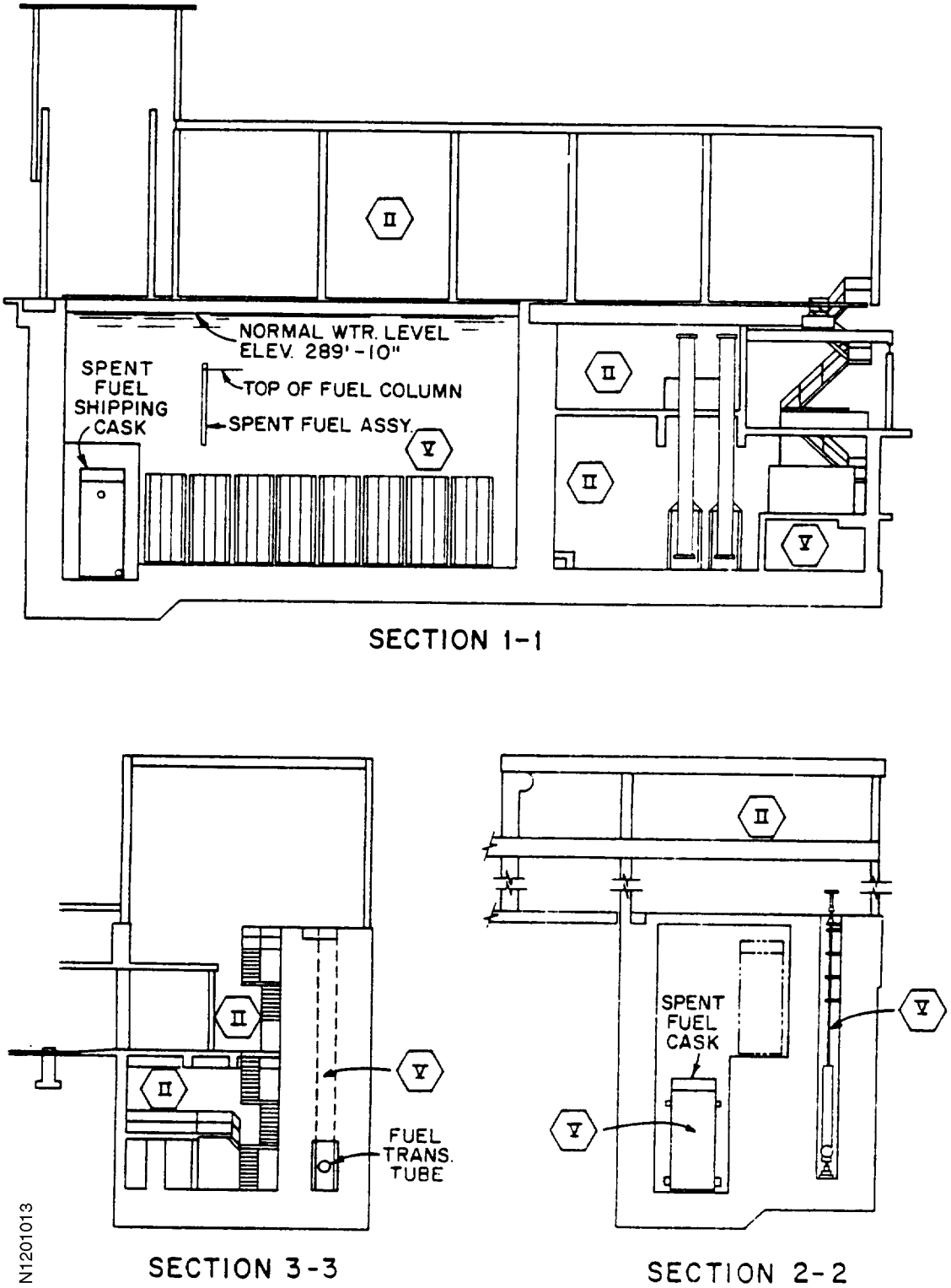

Figure 12.1-4 (Sheet 1 of 2)
RADIATION ZONES DECONTAMINATION BUILDING

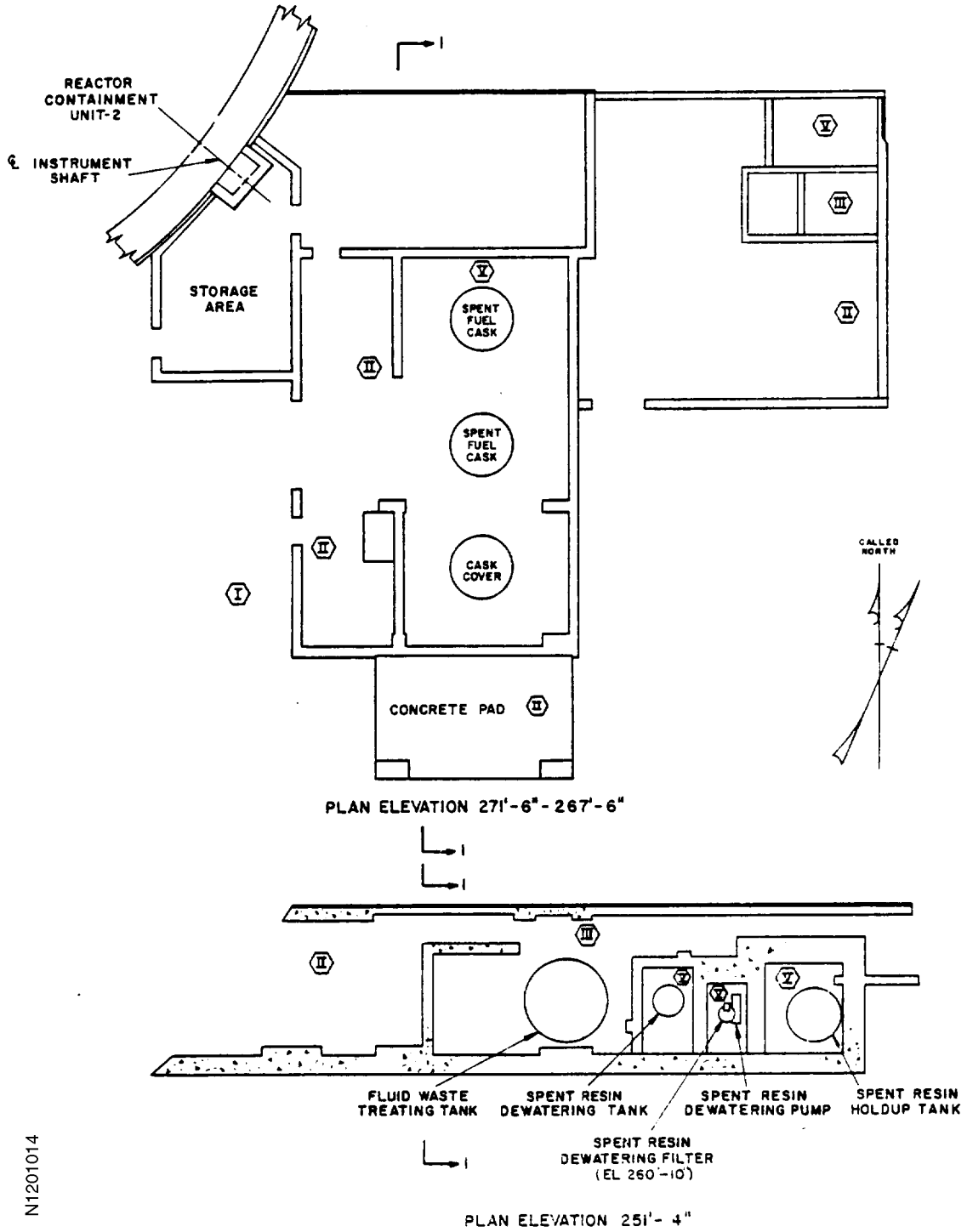

Figure 12.1-4 (Sheet 2 of 2)
RADIATION ZONES WASTE DECONTAMINATION BUILDING

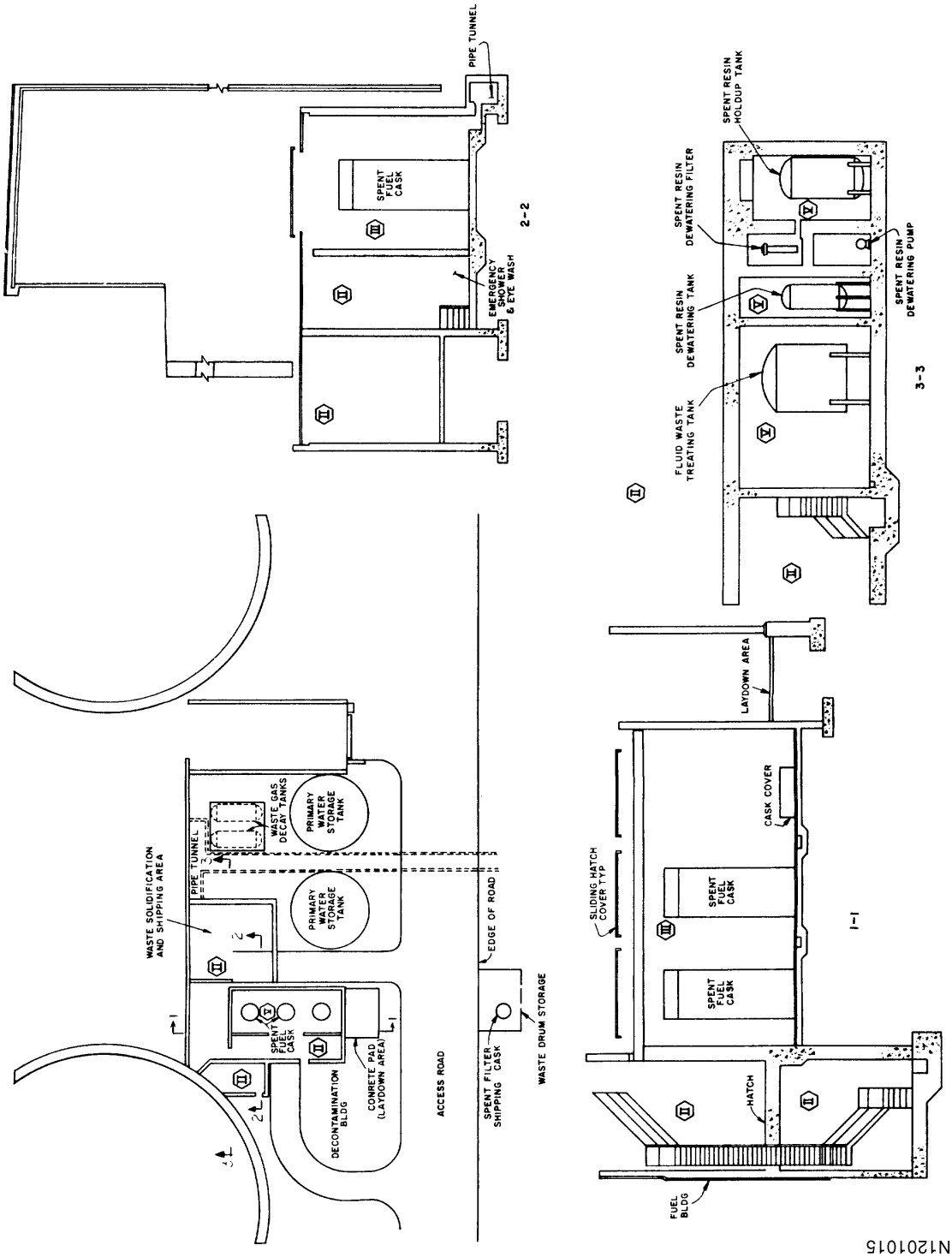

Figure 12.1-5
RADIATION ZONES WASTE DISPOSAL BUILDING

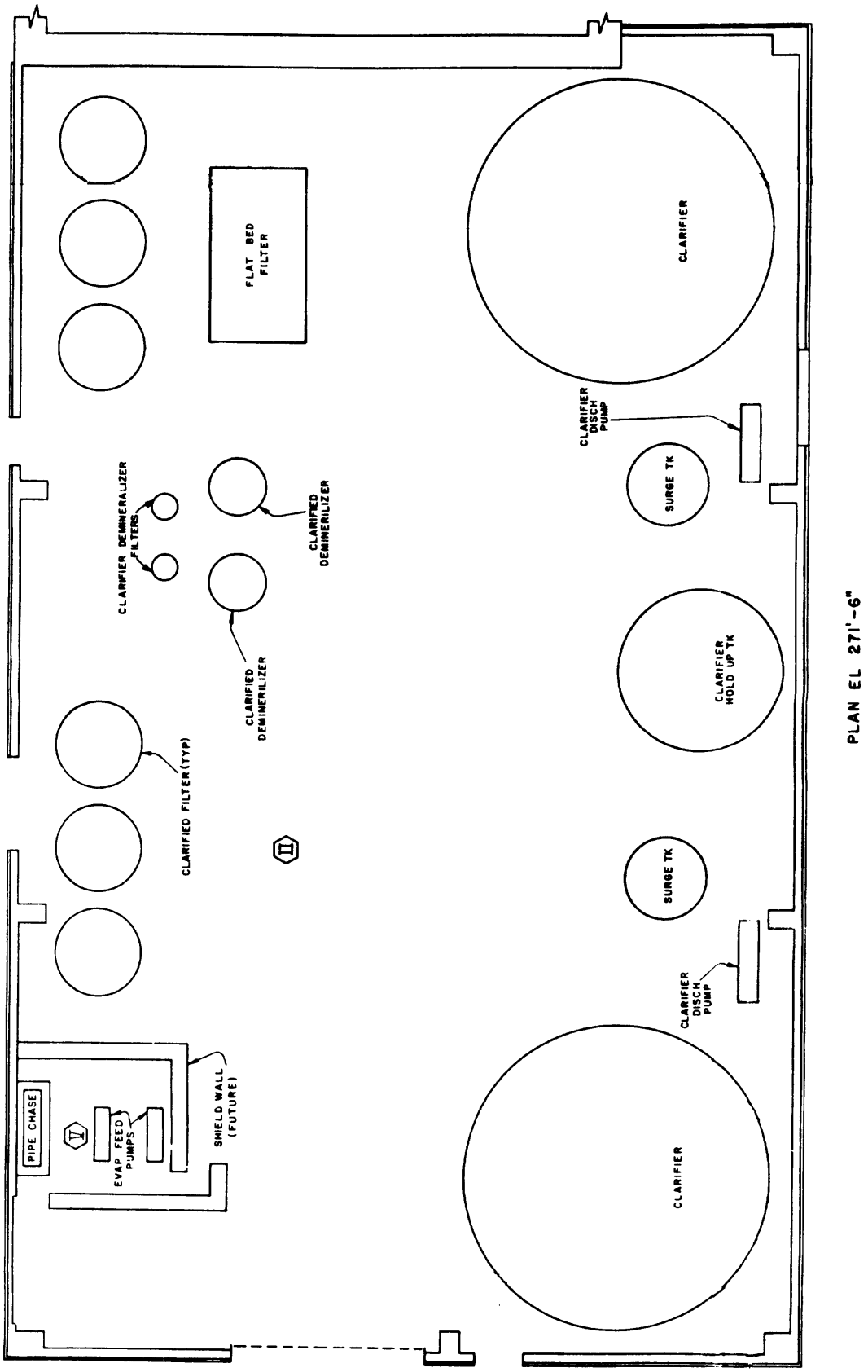

N12010 16

Figure 12.1-6
SHIELD ARRANGEMENT—PLAN

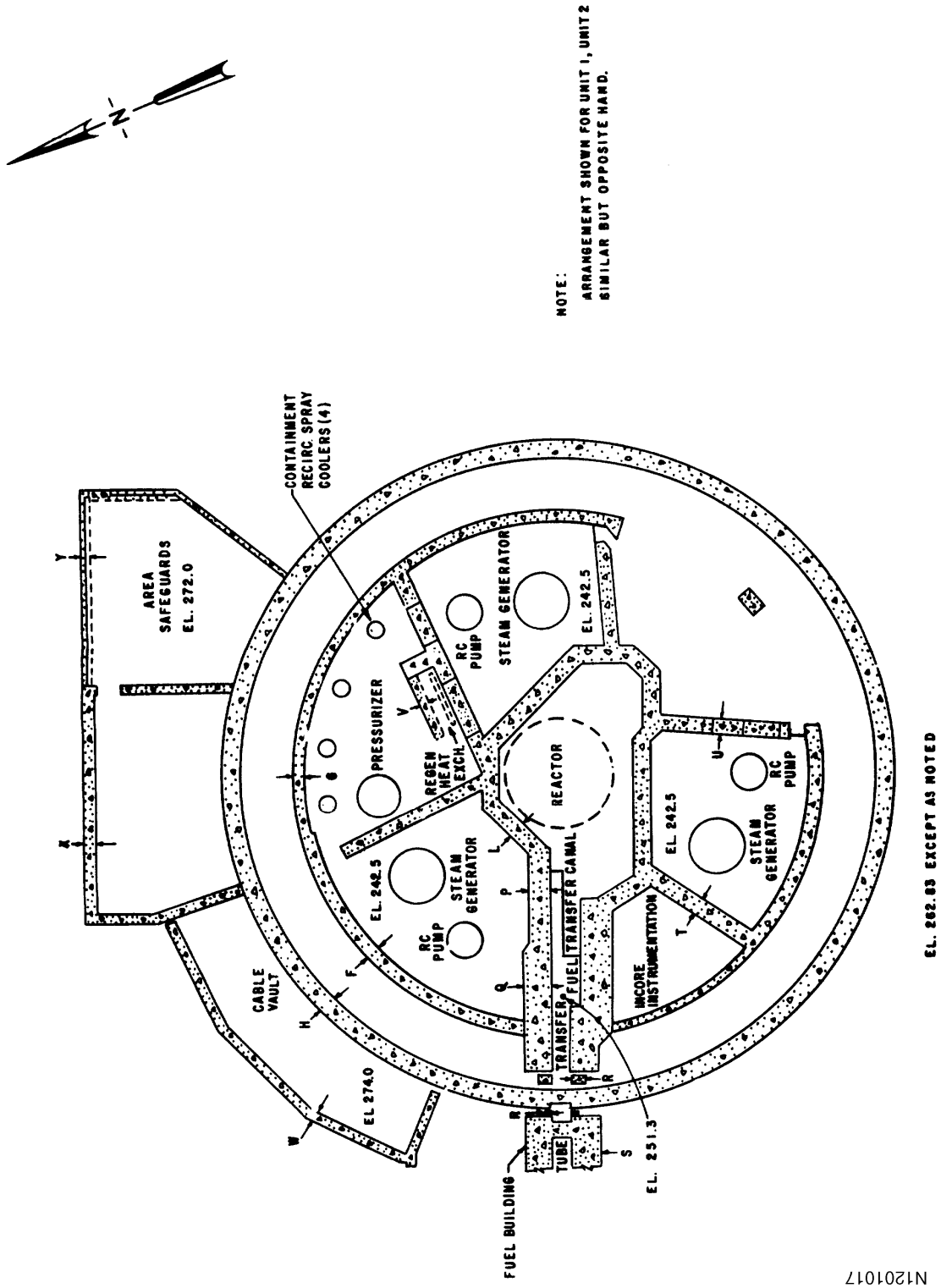

Figure 12.1-7
PERMALI LOCATIONS

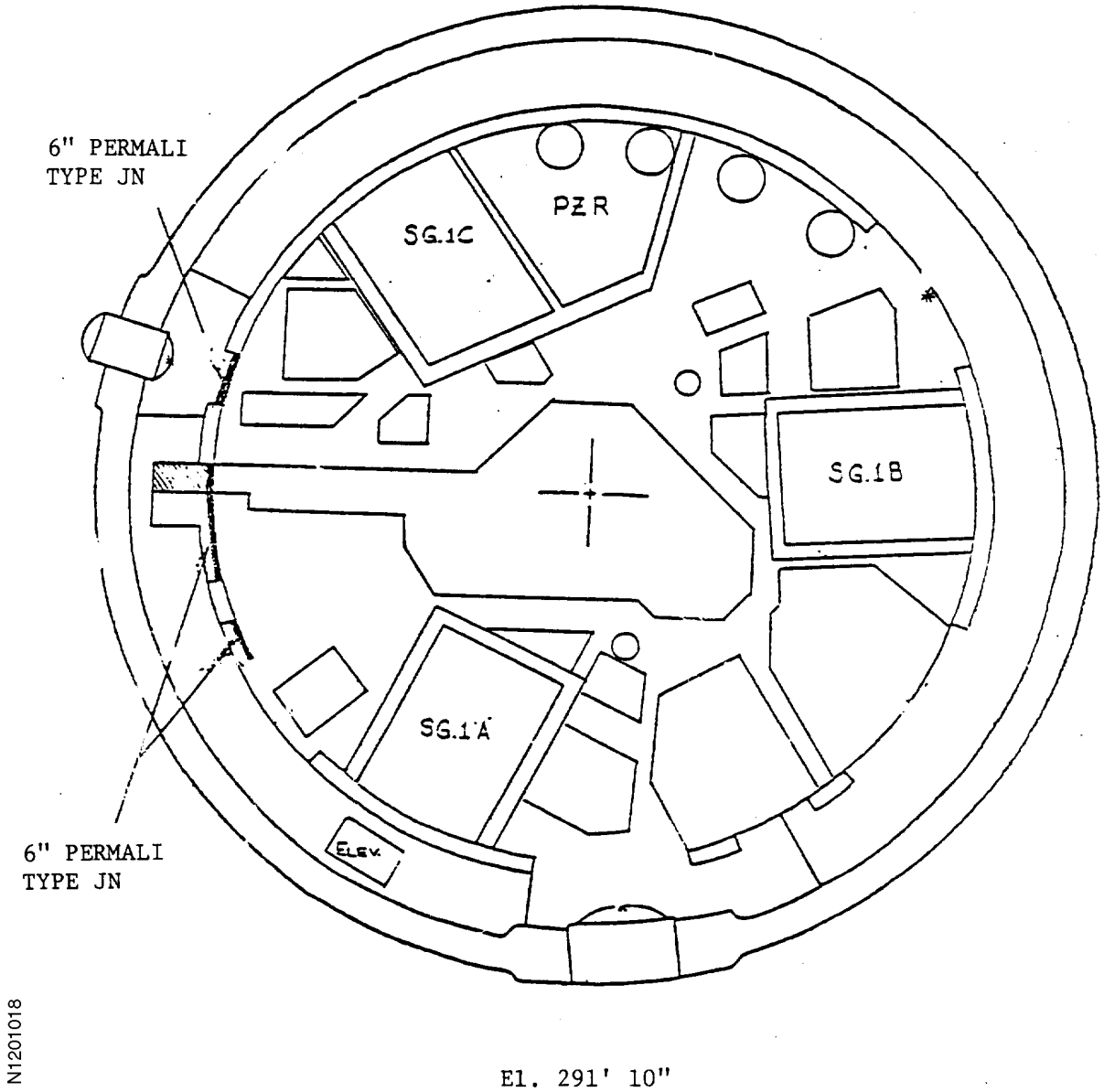

Figure 12.1-8
SHIELD ARRANGEMENT ELEVATION

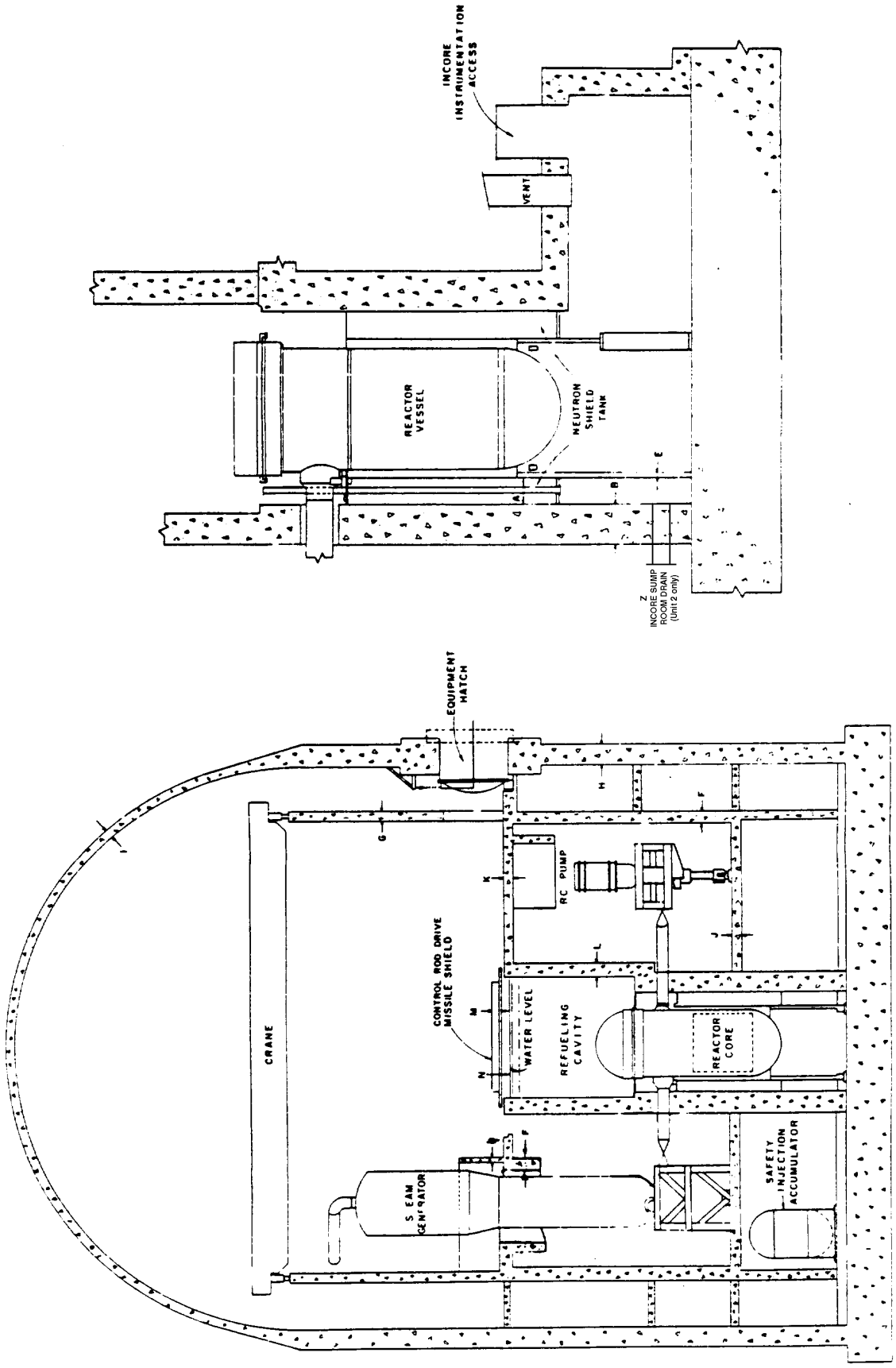

N120101 9

Figure 12.1-9
SHIELD ARRANGEMENT PLAN OPERATING FLOOR

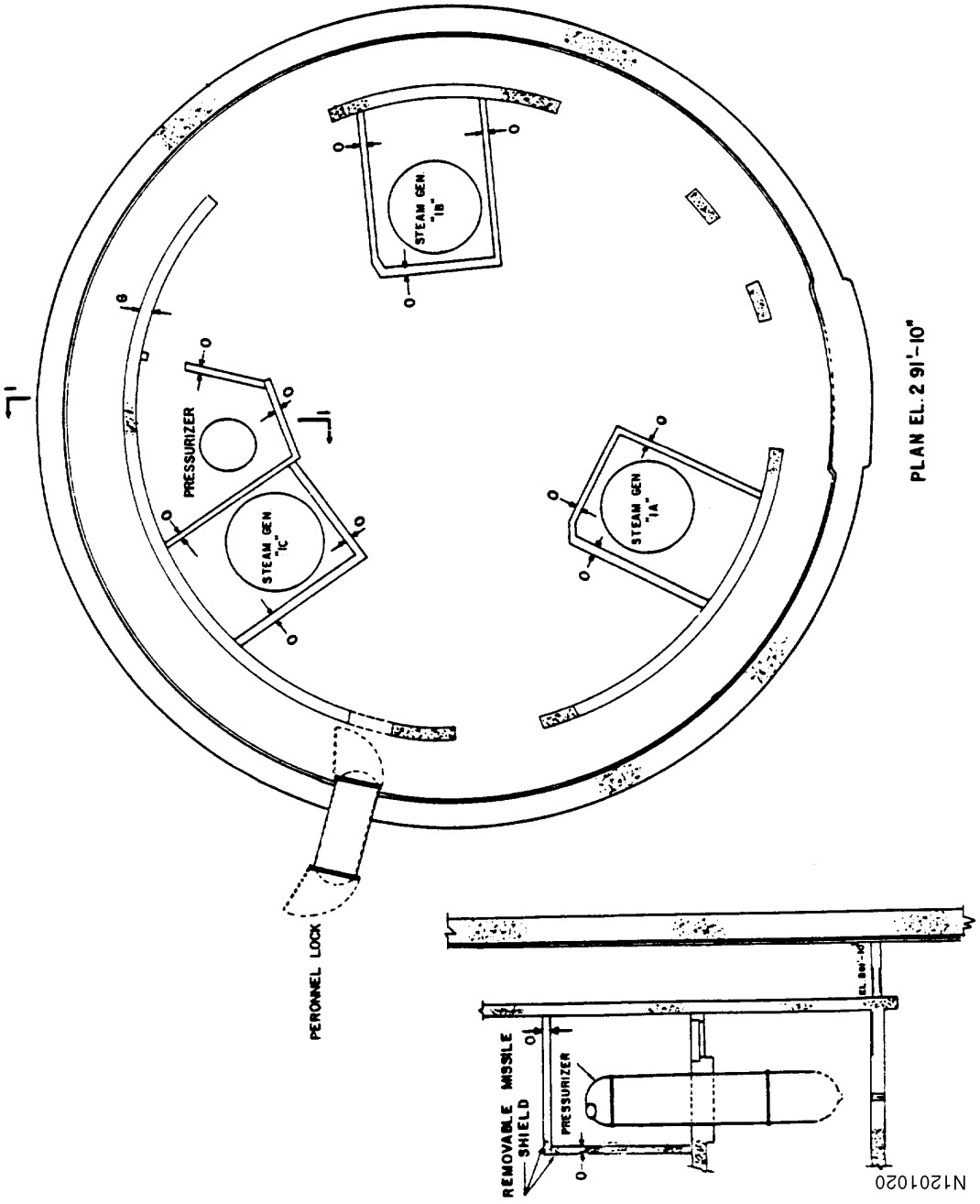

(See Appendix 12A for a discussion of supplementary neutron shielding.

Figure 12.1-10
DOSE RATE PER CURIE OF CO-60 EQUIVALENT
VS. DISTANCE FROM LOW LEVEL CONTAMINATED STORAGE AREA

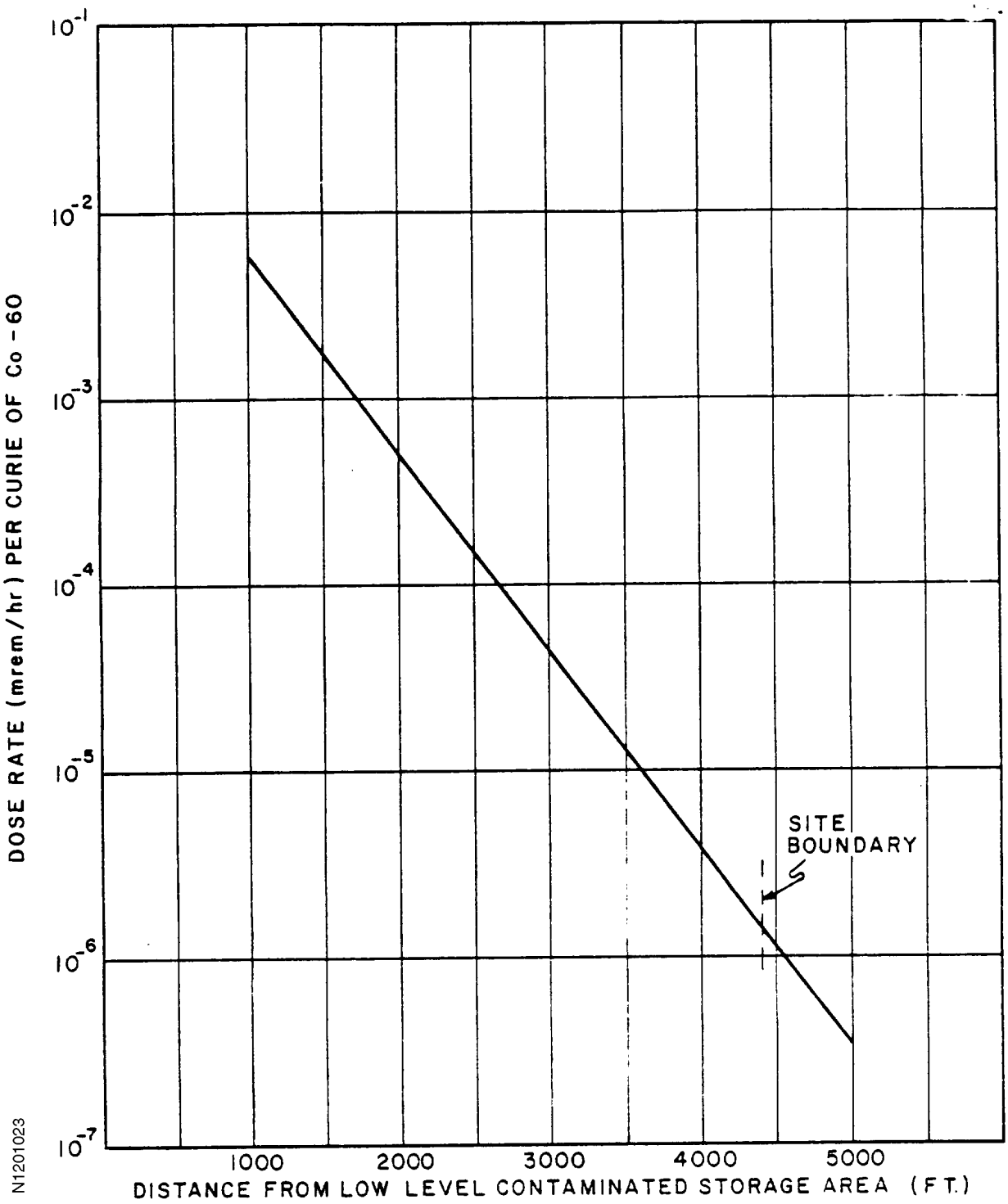

Intentionally Blank

12.2 VENTILATION

12.2.1 Design Objectives

One of the objectives of the ventilation system is to ensure that the airborne radioactivity concentration in different locations inside the station buildings during normal operation, including anticipated operational occurrences, are less than those allowed in Table 1, Column 3, of Appendix B of 10 CFR 20, except in the containment structures. Concentrations in areas accessible to plant administrative personnel and public visitors areas at the site will be less than 1% of the above.

The design and expected airborne radioactivity levels, including anticipated operational occurrences, for different buildings are listed in Table 12.2-1. The design and expected annual inhalation dose rates for plant personnel in each building are listed in Section 12.2.6.

The calculational methodology used to perform the design and expected airborne radioactivity levels, which are based on the criteria of the old 10 CFR 20, are valid analyses and do not require recalculation according to the revised 10 CFR 20 limits.

The containment internal cleanup system described in Section 9.4.9 and the high-efficiency particulate air (HEPA) and charcoal filters described in Section 9.4.8 are not required to reduce the radioiodine in the containment to the derived air concentration (DAC) before personnel entry. Personnel entry will be under administrative control only and will be allowed only in accordance with standard health physics practices, factoring in activity levels, occupancy times, and approved breathing equipment, as discussed in Sections 12.1.5 and 12.2.5.

12.2.2 Design Description

Detailed descriptions of ventilation systems for different buildings are given in the following sections of this report:

Section	Section Title
9.4.1	Main Control Room and Relay Rooms
9.4.2	Auxiliary Building
9.4.3	Decontamination and Waste Solidification Building
9.4.4	Turbine Building
9.4.5	Fuel Building
9.4.6	Engineered Safety Features Areas
9.4.7	Service Building
9.4.8	Auxiliary Building HEPA/Charcoal Filter Loops
9.4.9	Containment Structure

12.2.2.1 **Auxiliary Building**

The equilibrium airborne activities in the auxiliary building result from the leakage of primary coolant from pump seals and valve stems and from small, miscellaneous leaks. In addition, a small amount of iodine is released to the auxiliary building atmosphere from the sampling sink drains, but this is negligible compared to the other assumed leaks. All of the iodines and noble gases associated with these leaks are assumed to be released to the auxiliary building air and exhausted through the auxiliary building ventilation, which exhausts a minimum of 10 building volumes per hour.

In the auxiliary building, the primary coolant letdown to the chemical and volume control system passes through a mixed-bed demineralizer with a decontamination factor of 10 for all isotopes except Cs, Mo, Y, and the noble gases, for which the decontamination factor is 1, which reduces the ionic activity in the coolant.

There is a small potential for leakage upstream of the demineralizer. However, in the analysis, one-third of the leakage is assumed to occur before the demineralizers; the remaining two-thirds is assumed to occur after the demineralizers. The release of radioactive material in this area is considered unlikely because:

1. All the piping is welded.
2. All valves are of the diaphragm type, which precludes stem leakage.
3. No pumps having seals or other equipment with moving parts that might leak are located in this area.
4. Demineralizer and filter vents are contained by a piping system that discharges via a charcoal filter and radiation monitor.

The radioactive demineralizers are all in individual shielding cubicles along the south wall of the auxiliary building. These cubicles are not connected to the ventilation supply or exhaust system (Reference Drawings 1 & 2). The only air normally passing through these cubicles is slight leakage past valve stem extension or pipe penetration sleeves caused by any minor difference in air pressure between floors of the auxiliary building. Therefore, it is not deemed necessary to provide an exhaust system directly from this area.

12.2.2.2 **Containment Structure**

The equilibrium airborne activities in the containment structure have as their source the leakage of primary coolant within the containment for up to 18 months prior to purging. No dilution of the containment atmosphere is assumed during the 6-month period before the purge.

12.2.2.3 Turbine Building

Airborne activity enters the turbine building atmosphere via the main steam leakage specified in Section 11.1. The turbine building ventilation rate is 7×10^5 scfm and the building volume is 4×10^6 ft^3.

12.2.2.4 Fuel Building

Airborne activity is assumed to occur in the fuel building atmosphere from activity released from failed fuel assemblies in the spent-fuel pit. For the design case, one-third of a core from each unit, operated at 100% power for 3 years, 365 days/year, with 1% failed fuel, is assumed to be in the spent-fuel pit. For the expected case, one-third of a core from each unit, operated at 100% power for 3 years, 300 days/year, with 0.2% failed fuel, is assumed to be in the spent-fuel pit.

The fuel in the spent-fuel pit is assumed to have decayed for 100 hours, the minimum time before fuel can be transferred from the core to the spent-fuel pit.

Escape rate coefficients for both design and expected cases for the failed fuel in the spent-fuel pit are assumed to be 10^{-5} of the escape rate coefficients of the failed fuel in the core, which are listed in Table 11.1-5.

The spent-fuel pool is assumed to have an effective decontamination factor of 200 for iodines, the same decontamination factor used in the analysis of the fuel-handling accident in Section 15.4.5.

The fuel building has a ventilation exhaust rate of 35,000 scfm and a volume of 160,000 ft^3.

12.2.3 Source Terms

The activities listed in Table 12.2-1 are based on failed fuel and leakage assumptions given in Section 11.1 and the additional assumptions given in Section 12.2.2.

12.2.4 Airborne Radioactivity Monitoring

Radioactivity may become airborne through operations such as the welding or grinding of a contaminated component, the decontamination of such components, leakage from a system containing radioactive fluids or gases, or the disturbance of the deposited activity in various areas of the plant. An airborne sampling location is selected on the basis of the potential for airborne activity within the work area as determined by engineering evaluation.

This system is capable of monitoring any of eight possible ventilation paths but can be programmed as to the sequence and duration of monitoring. Seven of these sample points lie in probable maintenance or fuel-handling areas. The eighth sample point is a spare. The points sampled are (1) the fuel building, (2) the safeguards area of Unit 1, (3) the safeguards area of Unit 2, (4) the central area of the auxiliary building, (5) the general area of the auxiliary building, (6) the containment purge, and (7) the decontamination building. The ventilation vent multi-port sampler particulate monitor and the ventilation vent sample gas monitor which are described in

Section 11.4.2.6 has a manual override which allows the continuous sampling of a chosen area. The containment gas and particulate monitors (Sections 11.4.2.17 and 11.4.2.18) sample from the containment recirculation duct.

In the event that concurrent operations are being performed in different work areas, the multisample particulate monitor can be placed on manual and alternated at selected intervals between the work areas. Additionally, process radiation monitors continuously monitor selected ventilation lines containing or possibly containing radioactivity. Each monitor has a readout with an audible/visual alarm in the main control room. Local audible and visual alarms for the process and ventilation vents are provided by the post-accident radiation normal range monitors. The multisample monitor does not have a local readout and alarm. The above system can be supplemented with a portable moving or fixed filter paper continuous monitoring unit to provide additional monitoring for major maintenance, with a potential for high airborne radioactivity. Such equipment would be calibrated and operated in accordance with established procedures.

Low-volume air samplers are fixed filter (either paper, glass fiber, or charcoal cartridge, or a combination of these) vacuum pump-type samplers. High-volume air samplers are fixed filter, generally paper or cloth.

When either of the above samplers is used, it is operated for a known amount of time at a known flow rate. The filters are removed for counting with appropriate instruments. Depending on the analysis desired, filters can be counted for beta-gamma, alpha, iodines, or gamma isotopic. Theÿ concentrations are then calculated from these data. If required, portable counting equipment (beta-gamma or gross gamma) is available for counting filters at or near the location of the air sampler.

For the conditions given above, other than routine surveys, if personnel duties in the area are of a routine or fixed nature and other indicators (i.e., related systems level or pressure indicators, the radiation monitoring system, etc.) show no abnormal conditions, the samplers will be continuously operated and the filters changed and counted routinely at varying intervals.

On occasions when it is expected that conditions could change rapidly or vary considerably, the filters will be changed and counted routinely at varying intervals.

The air-sampling program is in addition to or supplements any protective equipment that is authorized or required by 10 CFR 20.

The sensitivity of the particulate monitor is such that the monitor can detect airborne particulate levels as low as one-third of the permissible 10 CFR 20 values. Because the particulates are collected on a moving filter tape, equilibrium is essentially reached in a collection time of 5 hours.

The sensitivity of the gas monitor is such that the permissible 10 CFR 20 values for Xe-133 and one-tenth the permissible 10 CFR 20 values for Kr-85 are detectable. Sampling time is not significant.

The total general area ventilation system flow rate is 74,100 cfm. The lowest exhaust flow rate from any building area that exhausts to the general area ventilation system and that is normally occupied by operating personnel is 12,400 cfm. Airborne concentrations in this area are therefore diluted by a factor of approximately six between the point of intake and the sampling point. The sensitivity of the monitors is such that as low as six-tenths of the permissible 10 CFR 20 level for Kr-85 and I-131 is detectable by the ventilation vent sample gas and particulate monitors. The central air ventilation system flow rate is 60,600 cfm. This system exhausts air from cubicles not normally occupied by operating personnel. The lowest rate of exhaust flow from an area that exhausts to the central area ventilation system is 150 cfm. This results in a dilution factor of approximately 400. Airborne activity levels above 10 CFR 20 permissible levels may not be detectable in the cubicles by the ventilation vent sample monitor. However, airborne levels throughout the auxiliary building, including the cubicles, are monitored as part of the routine health physics surveys as described in Section 12.3.1. The portable monitoring equipment used in these surveys is described above.

The primary function of the central area ventilation vent sample is to warn of abnormal releases indicative of gross equipment malfunction. In addition, the possible radiation sources within the cubicle areas are limited by design, as discussed in 12.2.2.1. Therefore, the ventilation vent sample monitor, in conjunction with the routine health physics airborne sampling program, provides adequate protection for operating personnel.

Background radiation levels and other factors that affect the sensitivity were difficult to quantify until after the station was in operation. To minimize the background contribution, the monitors were located on the upper level of the auxiliary building where the radiation levels were expected to be the lowest. Lead shielding reduces the background radiation to a level that does not interfere with the detector sensitivity. Stainless steel sample lines minimize deposition and plateout losses.

The post-accident air monitoring may be performed with portable air samplers, and in compliance with the TMI-2 Lessons Learned requirements. Cartridges are removed and counted in the shielded counting room with a multichannel analyzer. To reduce noble gas interference, silver zeolite cartridges have been obtained. To ensure the timely analysis of the cartridges in an emergency, several multi-channel analyzers are available for use in air monitoring. The required procedures are in effect. Thus, the capability exists for accurately monitoring iodine in the presence of noble gases.

To comply with the NRC's directive to provide the ability to monitor the post-accident release of potentially high levels of radioactivity via the ventilation system, as expressed in

NUREG-0578 and clarified in NUREG-0737, high-range effluent monitors have been installed in various release paths of the plant. They are described in Section 11.4.3.

12.2.5 Operating Procedures

Air sampling and bioassays are used to identify hazards, to evaluate individual exposures, and to assess protection afforded. When the use of respirators is considered necessary, their use is in accordance with written procedures for personnel training and for the selection, fitting, testing, and maintenance of the equipment.

Respiratory equipment approved by the National Institute for Occupational Safety and Health/Mine Safety and Health Administration (NIOSH/MSHA) is used. Equipment not tested and certified by NIOSH/MSHA requires an authorization and exemption be approved by the USNRC before use.

Authorization has been received to use MSA Model 401 (brass or aluminum parts), Ultralite, and Custom 4500 Dual-Purpose SCBA charged with 35% oxygen and 65% nitrogen. All units are to be equipped with silicone face-pieces. Regulator use is not to be initiated at temperatures greater than 135°F. Units may be used in areas where temperatures exceed 135°F if regulator use is initiated prior to entry into the areas. Breathing gas quality and composition, including hydrocarbon exclusion, are ensured by strict controls and maintained in accordance with the latest revision of the United States Pharmacopeia (USP) - The National Formulary (NF).

12.2.5.1 Filter Changes

Before a filter change, all filter casings are isolated to prevent the flow of air through the contaminated filters. Filters are removed from their frames and placed directly into a plastic bag.

All filter assemblies are provided with adequate working space to permit two men to replace the filters. To facilitate filter handling, no bank is more than three filter units high.

12.2.5.2 Temporary Air Ducting

In the reactor containment, connections for flexible duct, from the discharge side of portable ventilation units, are provided at the lower level in the ventilation purge exhaust duct to allow removal of radioactive gases from the steam generators or other areas of maintenance. These connections are capped during normal containment operation and the caps are removed when necessary to connect flexible duct.

In the decontamination building spent-fuel cask area, a flexible hose connection is permanently installed on the exhaust duct to permit the removal of airborne radioactivity during maintenance and repair activities. The hot laboratory in the service building has a permanent flexible hose for use in capturing airborne radioactivity.

12.2.6 Estimates of Inhalation Doses

The design and expected inhalation dose rates within the following areas are negligible.

The calculational methodology used to perform the estimated annual inhalation doses reported in Table 12.2-2 is based on the criteria of the old 10 CFR 20. These analyses remain valid and do not require recalculation according to the revised 10 CFR 20 criteria.

1. Main control room and relay room.
2. Decontamination building.
3. Engineered safety features area.
4. Service building.

Estimates of inhalation doses to plant personnel in the containment structure, turbine building, auxiliary building, and fuel building are listed in Table 12.2-2. Airborne concentrations used for inhalation dose estimates are based on the following assumptions:

1. Containment structure

   Entry to the containment structure can and will be made during power operation; however, if during such entries, levels of airborne radioactivity significant to inhalation dose accumulation were present, suitable protective air-breathing equipment normally would be used. After plant shutdown and containment purge, as done in preparation for refueling operations, there would be no significant levels of airborne radioactivity in the containment. However, for conservatism in calculating inhalation doses attributable to containment entry, the following was assumed:

   a. Iodine-131 in the containment at the maximum permissible concentration before entry.
   b. 52 hours/year occupancy factor.
   c. No protective air-breathing equipment.

2. Turbine building

   a. 0.2% failed fuel.
   b. 20 gallons/day per unit primary system to secondary system leak rate.
   c. 1.2×10^7 lb/hr per unit steam flow.
   d. 22 gpm per unit steam generator blowdown.
   e. 10 lb/hr per unit main steam leakage into the turbine building.
   f. 0.1 partition factor for iodines from liquid to steam in the steam generator.
   g. 4.0×10^6 ft^3 per unit free volume of the turbine building.
   h. No credit taken for plateout or decontamination inside the turbine building.
   i. 700,000 scfm per unit ventilation rate.
   j. 750 hours/year occupancy factor.

3. Auxiliary building
   a. 0.2% failed fuel.
   b. 0.003 gpm per unit (at 120°F) total primary system to auxiliary building leakage, divided as follows:
      1) 50% from sampling purges, with a partition factor of 10^3 for iodines released to the building atmosphere.
      2) 16.7% upstream from the mixed-bed demineralizers, with a partition factor of 10 for iodines released to the building atmosphere.
      3) 33.3% downstream from the mixed-bed demineralizers, with a decontamination factor of 10 and a partition factor of 10^3 for iodines released to the building atmosphere.
   c. 8.1×10^5 ft^3 free volume of the auxiliary building.
   d. 750 hours/year occupancy factor.
4. Fuel building
   a. 0.2% failed fuel.
   b. 2900 MWt per unit reactor power.
   c. Stored spent fuel has been in the reactor for 3 years of power operation.
   d. Average thermal neutron flux in the reactor core of $5.45 \times 10^{13}/cm^2$-sec.
   e. 157 fuel assemblies per core.
   f. One-third of a core from each unit in the spent-fuel pit in the fuel building (105 fuel assemblies).
   g. A decontamination factor of 100 for iodine in the spent-fuel pit.
   h. Escape rate coefficients for the spent-fuel pit of 6.5×10^{-13} sec^{-1} for noble gases and 1.3×10^{-13} sec^{-1} for iodines.
   i. 1.85×10^5 ft^3 free volume of the fuel building.
   j. 3.5×10^4 scfm ventilation rate.
   k. 250 hours/year occupancy factor.

The above occupancy factors are based on operating data from the Connecticut Yankee Atomic Power Plant.

The inhalation dose is then calculated by the following method:

$$Di(rem) = \frac{\text{Occupancy Factor (hr)} \times \text{Airborne Concentration } (\mu Ci/cc)}{MPC_i(\mu Ci/cc)} \times 30 \frac{Rem}{yr} \times \frac{1\ yr}{2000\ hr}$$

12.2 REFERENCES

1. Letter from N. Kalyanam, NRC, to J. P. O'Hanlon, Virginia Power, July 31, 1998, *North Anna Power Station, Units 1 and 2 - Exemption from 10 CFR 20.1703(a)(1), 10 CFR 20.1703(c), and 10 CFR 20, Appendix A, Protection Factors for Respirators, Footnote d.2(d), and Authorization to Use Certain Respirators for Worker Protection Inside Containment (Tac Nos. M98384 and M98385),* Serial No. 98-473.

12.2 REFERENCE DRAWINGS

The list of Station Drawings below is provided for information only. The referenced drawings are not part of the UFSAR. This is not intended to be a complete listing of all Station Drawings referenced from this section of the UFSAR. The contents of Station Drawings are controlled by station procedure.

	Drawing Number	Description
1.	11715-FM-2A	Arrangement: Auxiliary Building, Plan, Elevation 244'- 6"
2.	11715-FM-2F	Arrangement: Auxiliary Building; Sections 3-3, 4-4, & 5-5

Table 12.2-1
EQUILIBRIUM ACTIVITIES IN DIFFERENT PLANT BUILDINGS (μ CI/CM^3)

	Auxiliary Building		Turbine Building		Containment Structure		Fuel Building	
Isotope	Design	Expected	Design	Expected	Design	Expected	Design	Expected
Kr-85m	1.3×10^{-08}	1.3×10^{-09}	--	--	1.4×10^{-06}	1.5×10^{-07}	1.2×10^{-15}	2.3×10^{-16}
Kr-85	3.1×10^{-08}	3.1×10^{-09}	--	--	2.5×10^{-03}	2.0×10^{-04}	2.9×10^{-10}	4.9×10^{-11}
Kr-87	7.1×10^{-09}	7.1×10^{-10}	--	--	2.5×10^{-07}	2.5×10^{-08}	--	--
Kr-88	2.2×10^{-08}	2.2×10^{-09}	--	--	1.6×10^{-06}	1.6×10^{-07}	4.0×10^{-19}	7.9×10^{-20}
Xe-131m	1.5×10^{-12}	1.5×10^{-13}	--	--	7.4×10^{-05}	7.4×10^{-06}	3.5×10^{-09}	7.0×10^{-10}
Xe-133m	1.9×10^{-08}	1.9×10^{-09}	--	--	2.7×10^{-05}	2.7×10^{-06}	4.9×10^{-10}	9.7×10^{-11}
Xe-133	1.7×10^{-06}	1.7×10^{-07}	--	--	5.7×10^{-03}	5.7×10^{-04}	3.0×10^{-08}	6.1×10^{-10}
Xe-135m	9.1×10^{-10}	9.1×10^{-11}	--	--	6.8×10^{-07}	6.8×10^{-08}	3.3×10^{-13}	6.5×10^{-14}
Xe-135	3.7×10^{-08}	3.7×10^{-09}	--	--	1.1×10^{-05}	1.1×10^{-06}	5.3×10^{-11}	1.1×10^{-11}
Xe-138	3.3×10^{-09}	3.3×10^{-10}	--	--	3.0×10^{-08}	3.0×10^{-09}	--	--
I-131	3.0×10^{-09}	3.0×10^{-10}	2.1×10^{-11}	1.4×10^{-12}	2.2×10^{-06}	2.0×10^{-07}	2.7×10^{-11}	5.4×10^{-12}
I-132	1.1×10^{-09}	1.1×10^{-10}	3.0×10^{-12}	1.7×10^{-13}	3.9×10^{-07}	3.7×10^{-08}	2.3×10^{-11}	4.7×10^{-12}
I-133	4.9×10^{-09}	4.9×10^{-10}	2.3×10^{-11}	1.3×10^{-12}	2.9×10^{-06}	2.7×10^{-07}	3.1×10^{-12}	6.2×10^{-13}
I-134	6.3×10^{-10}	6.3×10^{-11}	3.4×10^{-13}	1.4×10^{-14}	6.8×10^{-08}	6.7×10^{-09}	--	--
I-135	2.6×10^{-09}	2.6×10^{-10}	7.1×10^{-12}	3.3×10^{-13}	1.1×10^{-06}	9.9×10^{-08}	2.5×10^{-15}	5.1×10^{-16}

Table 12.2-2
ESTIMATE OF ANNUAL INHALATION DOSES TO PLANT PERSONNEL [a]

Location	Estimated Annual Dose (rem)
Containment structure, Unit 1	0.78
Containment structure, Unit 2	0.78
Turbine building	0.0023
Auxiliary building	0.060
Fuel building	0.0024 [b]

a. Personnel whose work areas are normally in the locations designated above. Other plant personnel, such as administrative personnel, are expected to receive a small fraction of the doses listed above, if they receive any inhalation dose at all.
b. The impact of discharging a full core from each unit would be to increase the estimated annual dose received in the fuel building by a factor of three.

Intentionally Blank

12.3 HEALTH PHYSICS PROGRAM

12.3.1 Program Objectives and Procedures

The Radiological Protection program provides the guidance and technical support required with the handling and evaluation of radiological hazards associated with the operation and maintenance of the station. The administration of the program is the responsibility of the Manager Radiological Protection.

The Radiological Protection program consist of administrative and technical procedures and other associated Health Physics documents. This program and its revisions are approved by the Station Nuclear Safety and Operating Committee and is available for onsite review by the NRC. Each station employee receives training in basic radiation protection as described in Section 13.2. A Radiation Work Permit system is included in the Radiation Protection program and is described in the applicable Health Physics procedures. Protective clothing and other requirements are listed on or referenced by the permit.

Operating guidelines and rules to ensure that Total Effective Dose Equivalent (TEDE) will be ALARA during operation and maintenance are provided in the Radiological Protection program. Each station employee will be oriented as to its contents and usually quizzed to ensure his/her competence. Individuals deliberately violating procedures set forth in the program will be subject to administrative action.

Periodic radiation and contamination surveys by health physics personnel ensure that current radiological conditions are known. Results of these surveys are posted at the entrance to the radiological control area, the station's main health physics control point. Station personnel therefore have access to information regarding current radiological conditions in the area they intend to visit.

Station personnel will be issued dosimetry equipment, including indicating dosimeters, for activities within the radiological controlled areas. A system has been devised whereby the individual's accumulated exposure, after performing a job within the radiological control areas, is logged, thus allowing Health Physics to estimate his total exposure for the current month. If an individual's dose is excessively higher than others in his section for the same time span, Health Physics will inform his/her supervisor and request that another person be assigned the required task. Estimates of work completion time will be made, and the use of stay-time and the rotation of individuals will minimize exposure.

Personnel doses will be limited to 10 CFR 20.1201 limits. Administrative controls will be implemented to assure personnel doses do not exceed 10 CFR 20.1201 limits.

The routine monitoring program consists of air samples; contamination surveys (smears); gamma, beta-gamma, or neutron surveys; and both general area and contact dose rate readings.

The In-Plant Radiation Monitoring Program ensures the capability to accurately determine the airborne iodine concentration in vital areas under accident conditions. This program includes (1) training of personnel, (2) procedures for monitoring, and (3) provisions for maintenance of sampling and analysis equipment.

Health physics personnel perform regular in-plant surveys in all areas where personnel access is required. The frequency depends on the area in question and on current plant conditions, and is defined in the Radiological Protection Program. Appropriate general area readings and smears are taken, in addition to selected air samples. Other areas of the station are surveyed as appropriate for general area, beta-gamma, contamination, and airborne activity.

12.3.2 Facilities and Equipment

The health physics facility is located in the service building corridor leading to the auxiliary building and thus is convenient to all personnel entering and exiting the RCA. The facilities include office space, briefing room, labs, a count room, change rooms, dosimetry issue area, instrument issue, laundry area and a personnel decontamination area. These facilities are shown on Reference Drawing 1.

Personnel change rooms are provided so that personnel may done clean protective clothing prior to entering the RCA when required by the RWP. An ample supply of cloth coveralls, lab coats, hoods, shoe covers, rubber gloves, plastic suits, etc. are available as required.

The personnel decontamination area is located at the exit to the RCA and is used for monitoring personnel for contamination and performing any decontamination of personnel as required. Showers and sinks are provided to aid in any personnel decontamination effort.

Fixed and portable instrumentation is available for counting and/or detecting and indicating radiation levels from all radiation sources at the station. A sufficient number are on hand to ensure continued availability. Calibration/recalibration is performed in accordance with applicable technical procedures.

Respiratory protection devices are available to protect personnel from airborne radioactivity and are issued in accordance with the applicable RWP.

Radiation areas are clearly posted and warning signs, barricades and locked doors are used in accordance with the Radiation Protection program to protect personnel from inadvertent access to high radiation areas.

Additional shielding material is available as needed and can be used on either a permanent or temporary basis. The material consist of lead blankets, steel sheets and concrete blocks. A special transfer cask is available for handling highly radioactive filters. Remote-handling tools are available for handling small lightweight objects or remotely operating valves or other components, while cranes and monorails can afford the distance required for handling heavier objects.

Personnel exiting any RCA are monitored for radioactive contamination in accordance with the Radiation Protection program. Additional monitoring is performed for personnel exiting the primary restricted area.

12.3.3 Personnel Dosimetry

External dosimetry is provided for all personnel who enter any radiological controlled area or radioactive material storage area at the station. Thermoluminescent dosimetry (TLD) badges are used to determine lens dose equivalent, shallow dose equivalent and deep dose equivalent as required by 10 CFR 20. Indicating dosimeters are used to estimate doses in the periods between badge readings. Extremity dosimetry is worn in accordance with the applicable RWP.

TLD dosimeters will be calibrated according to methods and standards established by the manufacturer of the equipment and in accordance with applicable technical procedures.

The Bioassay program is in accordance with the requirements of 10 CFR 20. The Bioassay program quantifies the amount of radioactive material present in workers and converts the results to calculated dose and estimated intakes of radioactive material. The program also offers a method to aid in evaluating the effectiveness of Station programs to control and minimize airborne radioactive material. Frequencies, procedures and types of analyses are defined in the Radiation Protection program.

Whole-body counts of all station employees are taken as soon as practicable after their assignment to the station. Nonemployee personnel assigned duties at the station are whole-body counted as required by radiation protection.

Standard lab equipment is available to prepare samples as required for counting. Distilling apparatus and ion-exchange columns are available for preparing liquids for tritium analysis.

12.3 REFERENCE DRAWINGS

The list of Station Drawings below is provided for information only. The referenced drawings are not part of the UFSAR. This is not intended to be a complete listing of all Station Drawings referenced from this section of the UFSAR. The contents of Station Drawings are controlled by station procedure.

	Drawing Number	Description
1.	11715-FM-5A	Arrangement: Service Building, Sheet 1

Intentionally Blank

12.4 RADIOACTIVE MATERIALS SAFETY

12.4.1 Materials Safety Programs

Established health physics procedures require the notification of the Radiation Protection Department of the arrival of radioactive materials at the station. Appropriate surveys and inventory are then taken and the material is taken to a designated area for storage and/or use.

High-activity sources, such as reactor start-up sources, are normally stored in their shipping containers, in other appropriate containers, or under water until their use is required, at which time Health Physics coverage will be provided. Sources such as those required for calibrating high-range gamma survey meters are obtained from manufacturers in shielded devices designed so that the sources cannot be readily removed and so that doses to those using the sources can be kept ALARA. Other calibration sources will be stored in locked areas and/or shielded containers, and their removal will be by authorized personnel only.

The use of unsealed by-product material received at the site is essentially limited to that of health physics or chemistry personnel in the preparation of low-level calibration sources for count room equipment. It is not expected that any unsealed, special nuclear material will be received at the site.

The Radiological Protection Plan requires that no radioactive material or suspected radioactive material be carried or removed from a restricted area without Health Physics' notification and approval. Within the restricted area, all unattended tools, loose components, or equipment containing or contaminated with radioactive material must be identified by tagging or placed behind barriers.

Tool kits are available for work in contaminated areas only, thereby eliminating the need to transfer a large number of tools back and forth between clean and radiological controlled areas. These tools are periodically checked and decontaminated as required. When special tools are required and used, they must be surveyed by Health Physics before leaving the radiological controlled areas for storage or use in other areas of the station.

Hot storage areas are provided to contain and control radioactive material. These areas are equipped with locks to preclude unauthorized entrance and will provide storage for contaminated items and highly radioactive items such as incore detectors until they are used elsewhere or shipped off the site. The Old Steam Generator Storage Facility is a hot storage area and stores the steam generators lower assemblies removed from containment. In addition to the hot storage areas, other areas are designated as radioactive material storage areas, used to store radioactive tools and equipment.

12.4.2 Facilities and Equipment

The facilities available for handling radioactive material that is considered waste are described in Chapter 11. A decontamination facility is described in Section 9.5.9. A tool and

equipment storage facility, is mentioned in Section 12.4.1. The exhausts for the hot-lab hoods and laundry are described in Section 9.4.7.2. Additional information pertaining to facilities and equipment is contained in Sections 12.1.5 and 12.3.2.

12.4.3 Personnel and Procedures

The Manager Radiological Protection is responsible for the station Radiation Protection program. His duties, experience and qualifications are described in Dominion Nuclear Facility Quality Assurance Program Description, Topical Report DOM-QA-1. Reporting to the Manager Radiological Protection are supervisors, health physicists and technicians. There are at least five persons assigned to the Health Physics Department at the station, meeting the qualifications as technicians described in ANSI 3.1.

12.4.4 Required Materials

The following by-product, source, and special nuclear materials exceed the amounts in Table 1, Regulatory Guide 1.70.3, *Additional Information, Radioactive Materials Safety for Nuclear Power Plants*, dated February 1974:

- Cs-137 - sealed source for instrument calibration.
- Am-Be - sealed neutron source for instrument calibration.

Appendix 12A[1]
Description of Neutron Supplementary Shield

1. Appendix 12A was submitted as Appendix Q in the original FSAR.

Intentionally Blank

Appendix 12A: Description of Neutron Supplementary Shield

Table of Contents

Appendix 12A: Description of Neutron Supplementary Shield

List of Tables

Appendix 12A: Description of Neutron Supplementary Shield

List of Figures

Intentionally Blank

Appendix 12A
DESCRIPTION OF NEUTRON SUPPLEMENTARY SHIELD

In compliance with 10 CFR 50.55(e), NRC Region II was notified on April 28, 1978, that the maximum dose rates on the operating floor of North Anna Unit 2 could exceed the values presented in Chapter 12 of the FSAR. By letter dated May 25, 1978, NRC Region II was informed that Vepco was investigating several methods of reducing the radiation levels.

A final report was submitted on January 31, 1979, describing the shielding design that reduces the dose rates to within the Chapter 12 limits. As part of this shielding design effort, a comprehensive re-evaluation of the reactor pressure vessel (RPV) support system was conducted. Details of these analyses were provided in the report.

By letter, Serial No. 300B, dated February 22, 1979, the report was supplemented with additional information. With the neutron shielding in place, the fuel assembly impact loads have increased by approximately 10%. This change alone would reduce the margins previously reported; however, the loads are still less than the allowable values. Recent testing on fuel grid impact strength has resulted in Westinghouse's increasing the allowable loads by approximately 25% above those in the report. These new allowables have been previously reported to the NRC on the Diablo Canyon docket (Docket Nos. 50-275 and 50-323). When using the new allowable loads along with the revised impact loads, the revised margin is higher than in the report. The "better estimate" factor of safety of 1.76 would now be approximately 1.97. In addition, the limiting stress on the reactor vessel internals at the core barrel girth weld has decreased from that reported. This is a result of the time phasing of the component forces.

In summary, the supplementary neutron shield restores expected dose rates inside the containment to the Chapter 12 limits, and it does not change the conclusions previously established.

12A.1 INTRODUCTION

The radiation levels inside the reactor containment, determined by radiation surveys (Reference 1) on Unit 1, were greater than the design levels presented in Chapter 12 at two locations:

1. The annulus area between the crane wall and the containment wall on the operating floor (Elevation 291 ft. 10 in.) at crane wall openings.
2. Inside the personnel lock.

The survey results indicated dose rates on the operating floor in the annulus area at openings in the crane wall on the order of 2500 mrem/hr neutron and 200 mrem/hr gamma. The gamma radiation levels were primarily attributable to neutron capture reactions in the containment

concrete and steel structures. This conclusion was consistent with thermal neutron flux measurements on the order of 3×10^4 n/cm^2-sec using thermoluminescent dosimetry. The survey results indicated dose rates in the personnel lock on the order of 40 mR/hr neutron and 2 mR/hr gamma.

Based on the higher-than-anticipated radiation levels inside the containment, additional neutron shielding has been designed and installed in both units.

The neutron attenuation effectiveness of the shield has been conservatively calculated, and the safety analysis demonstrates that the installation of the proposed shielding will have no effect on the safety of the plant or the integrity of the reactor vessel support system, and that it will substantially reduce the combined neutron and gamma dose rates in the personnel lock and in areas required for general containment access.

12A.2 NEUTRON SHIELD DESIGN CRITERIA

The neutron shield is designed to:

1. Reduce radiation levels both in the portion of the annulus area between the crane wall and the containment wall on the operating floor that is required for general containment access and in the personnel lock to the levels presented in Chapter 12.
2. Be a structure that does not require removal during refueling and concurrent personnel radiation exposure.
3. Have negligible effect on the safety of the plant or the integrity of the reactor vessel support system and reactor coolant system. The effects of the shield on reactor pressure vessel internals response and cavity pressure will not impair the safety of the plant or the integrity of the RPV supports.
4. Be a structure incapable of becoming a potential missile that could adversely affect any safety-related equipment.
5. Permit the required inservice inspection of reactor vessel nozzle and piping welds.

12A.3 EFFECTIVENESS OF COLLAR/SADDLE SHIELD

The effectiveness of the collar/saddle shield in reducing neutron streaming from the reactor cavity was assessed by two distinctly different calculational methods. The first method involved the use of the COHORT-II Monte Carlo program (Reference 2) in an analog mode, starting with an isotropic surface source at the outside surface of the reactor pressure vessel. The second method involved the use of the MORSE Monte Carlo program (Reference 3) with neutron albedo representations of surface scattering and an isotropic source at the outer surface of the reactor pressure vessel.

The dose rates in the crane wall openings were calculated using both Monte Carlo programs without the collar/saddle shield in place and compared to measurements at North Anna Unit 1. The results of these calculations are tabulated in Table 12A-1.

The neutron dose rates were then calculated for the same detector locations with the collar/saddle shield in place, using both Monte Carlo computer programs. Table 12A-2 shows the neutron dose rates for the two calculational methods.

The assessment of the effectiveness of the collar/saddle shield was concentrated at the openings in the crane wall above the operating floor. The effect of the crane wall is such that the dose rates in the annular region between the crane wall and containment wall will be a fraction of those levels predicted for the openings. Similarly, the dose rates in the personnel air lock are expected to be well within the 2.5 mrem/hr criterion at that location as a result of the effectiveness of the collar/saddle shield.

It is also expected, as noted previously, that the actual neutron dose rates will fall within the range predicted by the two analyses. For the highest neutron radiation area in the annular region on the operating floor (Detector Location 5, as shown on Figure 12A-1), this would indicate values ranging from 25 to 96 mrem/hr. Since the gamma dose rates on the operating floor are primarily attributable to (neutron-gamma) reactions with the containment concrete and liner, we expect the combined neutron-gamma dose rates in the annular region between the crane wall and containment wall to be below the 100 mrem/hr criterion. To reduce even further the potential exposure rates, openings in the crane wall between the personnel lock and the elevator will be blocked with 3 inches of Permali, Type JN. The opening opposite the personnel lock will be blocked with 6 inches of Permali, Type JN.

12A.4 SHIELD DESIGN

12A.4.1 Description

The supplementary neutron shield is composed of these main components:

1. *Collar Assembly*: As shown in Figure 12A-2, the cylindrical collar assembly is composed of six segments, each with an extended base and centering tabs. The segments rest on the top of the neutron shield tank and are fastened together by a metal strap to form the collar. The collar fits around the reactor pressure vessel over the insulation and extends to the spaces between the nozzles. Each collar segment consists of an outer steel casing, and is filled with a silicon-based neutron-attenuating material.

2. *Saddle Assembly*: As shown in Figure 12A-3, the saddle assembly consists of U-shaped blanket-type covers for the RPV nozzles, and extends from the collar interface to the primary shield wall. The saddles are composed of approximately 130 0.25-inch-wide strips of silicon-based neutron-attenuating material per nozzle.

3. *Dust Cover Blocks*: The dust cover blocks are silicone-based neutron-attenuating material blocks encased in stainless steel sheet metal. The blocks are shaped to cover the dust covers on the RPV nozzle support structure and to partially fill the space between the dust cover and the collar base underneath each nozzle, as shown in Figures 12A-2 and 12A-4.

4. *Crane Wall Area Shielding*: Neutron-attenuating shield material will be placed in the crane wall openings extending from directly opposite the personnel hatch to the elevator entrance and over the portion of the fuel transfer canal behind the crane wall, as shown in Figure 12A-5.

12A.4.2 Location

The neutron-shielding components, with the exception of the shielding in the crane wall openings, are all located inside the upper reactor cavity. The bases of the six collar segments rest on the top of the neutron shield tank. The collar segments are strapped together in contact with the RPV insulation. In this position, the collar segments are placed directly in the path of escaping neutrons emanating from the annulus between the reactor pressure vessel and the neutron shield tank.

The 0.25-inch U-shaped saddles are positioned on the nozzles over the thermal insulation along the length of the nozzles, as shown in Figure 12A-3.

The dust cover blocks, shown in Figures 12A-2 and 12A-4, are positioned on top of the neutron shield tank around the dust covers underneath the nozzles.

Shielding is located in those crane wall openings shown in Figure 12A-5.

The layout arrangement of the collar/saddle shield is shown in Figure 12A-6.

12A.4.3 Materials

The neutron-attenuating material used in the collar, saddles, and dust cover blocks is a silicon-based elastomer with a hydrogen density of approximately 0.06 gm/cm^3 (4.3% by weight). The shield material will be impregnated with boron carbide (B_4C) to 2.0% by weight, with the resultant effective boron density of 0.02 gm/cm^3 (1.5% by weight).

The material used for attenuating neutrons in the crane wall openings is Permali, Type JN, a densified beechwood laminate that incorporates 6% hydrogen and 3% boron.

The outer wall of the collar segments is constructed of 3/8-inch carbon steel, and the inner wall is 10-gauge stainless steel. The dust cover blocks are encapsulated with stainless steel.

12A.4.4 Supports

The entire extended base of the collar rests on top of the neutron shield tank. The inner cylindrical surface rests against the RPV insulation. Additionally, collar segments are held together by a metal belt wrapped around the collars at the top.

The saddle elements rest upon the top of the nozzle insulation and they are axially restrained by angle irons attached to the nozzle insulation shell.

The dust cover blocks rest on top of the NST and RPV nozzle support structure dust covers and are laterally restrained by the collar base.

Shielding sections are supported in the crane wall openings by a steel framework attached to the crane wall.

12A.4.5 Missile Effects

The only credible missiles are the saddle strips on the nozzle of a postulated broken reactor coolant pipe. The jet force of the flow from the broken pipe ends may cause the strips to exit the upper reactor cavity. These missiles would be long, thin (0.25-inch wide), low-mass strips of silicon elastomer with low rigidity. Hence, they will not adversely affect any safety-related equipment.

The collar segments are not expected to be potential missiles for the following reasons:

1. The collar is located so that it is not subjected to direct jet impingement forces from the postulated limited-displacement breaks.
2. The pressurization of the reactor cavity due to the mass and energy released from the break would force the collar segments down against the neutron shield tank, against each other, and against the RPV insulation.
3. The metal belt around the collar, together with centering tabs at the base of each segment, will keep the collar assembly in place.

Under LOCA conditions, the dust cover blocks will not become missiles because they are not exposed to lifting forces on any surface.

12A.4.6 Effect on Containment Sump

Saddle strips that may be propelled by the jet force onto the operating floor would be required to follow a complex and tortuous path through gratings or down stairwells to reach the sump level.

The strips have a density greater than that of water and will not float. If any of them reach the containment floor, it is unlikely that they will be transported toward the sump by the containment spray water because of the low water velocity to the sump. The sumps have screens

provided as described in Section 6.2.1.3.2, and these screens would prevent any saddle strips from reaching the sump.

12A.5 REACTOR PRESSURE VESSEL SUPPORT INTEGRITY REVIEWS

A 27-node model was used to calculate the pressure-time history in the reactor cavity following a postulated 150-in^2, cold-leg, limited-displacement rupture. The computer code RELAP4/MOD5[8] (with air) was used to calculate the pressure-time transients.

The pressure transients were then transformed into asymmetric force-time histories and moment-time histories for application to both the reactor pressure vessel and internal structures. In this regard, the unbalanced forces on the reactor pressure vessel and the primary shield wall (PSW) were higher than previously determined. Peak horizontal RPV force increased from 1540 to 1660 kips and peak moment increased from 26×10^3 to 49.5×10^3 in-kips.

A recalculated RPV support stiffness, using additional flexibility in the sliding block, was used in the development of RPV and PSW motion in response to forces on the reactor pressure vessel.

The most important changes involved the so-called Case 1 (maximum horizontal RPV displacement). The maximum horizontal displacement in fact was relatively unchanged (from 0.072 to 0.071 inch), but it had to be combined with RPV rocking (0.00038 vs. 0.000517 rad) present at this new, slightly shifted time point (from 0.070 to 0.0737 second).

These new displacements were combined with revised PSW asymmetric pressure response data. New loads for the RPV support and the neutron shield tank were developed and are presented in Tables 12A-3 and 12A-4. The RPV nozzle support loads are shown to be higher than previously reported. It is concluded, however, that none exceed the integrity definition inherent in Figure 12A-7. This figure shows that the new load data remain within the structural integrity limit envelope.

Revised relative displacement data are presented in Table 12A-5. While these data again show differences, these values are shown to have little effect when compared with the allowable displacement envelope.

It is therefore concluded that fundamental conclusions relating to the integrity of RPV supports and the extent of permissible local plasticity are unchanged.

The re-evaluation of the system included the assessment of changes in load effects in the steam generator and reactor coolant pump supports. No design-basis loads were affected and no changes to data reported in Section 5.5.9 are required.

The analysis of the neutron shield tank and primary shield wall showed that the applied loads are within the material capability of these components.

The emergency core cooling system (ECCS) branch piping for Unit 2 was stress analyzed. This evaluation showed that the ECCS branch piping remains integral.

12A REFERENCES

1. E. A. Warman et al., *Radiation Survey in Reactor Containment Building North Anna Unit 1*, Report RP-30, Stone & Webster Engineering Corporation, July 21, 1978.
2. L. Soffer and L. Clemons, Jr., *Cohort-II - A Monte Carlo General Purpose Shielding Computer Code*, Report No. NASA TN D-6170, National Aeronautics and Space Administration, April 1971.
3. E. A. Straker et al., *The MORSE Code with Combinatorial Geometry*, Report DNA-286 OT, Defense Nuclear Agency, May 1972.

Table 12A-1
COMPARISON OF CALCULATED NEUTRON DOSE RATES WITH MEASUREMENTS MADE AT NORTH ANNA UNIT 1, ADJUSTED TO 100% POWER

Type of Data	Analytical Approach	Flux-to-Dose Response Function	Neutron Dose Rate (mrem/hr) Detector Location [a] 3	4	5	6
Calculated dose	COHORT II	ANSI/ANS-6.1.1-1977	1920	2570	2930	2410
Equivalent rate	MORSE	Snyder-Neufeld	2260	3300	2420	2300
Measurement (uncorrected for instrument overresponse)			2090	2640	2860	1430

a. Refer to Figure 12A-1.

Table 12A-2
CALCULATED NEUTRON DOSE RATES WITH SUPPLEMENTARY NEUTRON SHIELDING

Analytical Approach	Expected Neutron Dose Rate as Measured with PNR-4 Detector (mrem/hr)					
	Detector Location [a]					
	1	2 [b]	3	4	5	6
COHORT II method	-	190	82	77	96	66
MORSE method	285	45	17	25	25	19

a. Refer to Figure 12A-1.

b. Detector location 2 is on the inside of the crane wall (i.e., surface of Permali Shield, Type JN).

Table 12A-3
REACTOR PRESSURE VESSEL SUPPORT AND NEUTRON SHIELD TANK LOADS PHASE

Load Type	F_H kips	F_V kips	V_{SW} kips	M_{SW} in-kips	P kips	V_B kips	M_B in-kips	T in-kips
Pipe rupture [a]	1253	1249	3509	370,268	1067	268	31,897	7296
Seismic	±121	±81	±259	±32,467	±316	±278	±84,658	±3883
Total	1374	1330	3768	402,735	1383	546	116,555	11,179
Design capability of NST/RPV support	844	1000	25,748 [b]	617,993 [b]	10,433	6260	545,964	745,955

a. Includes internals due to break number 2 plus deadweight plus asymmetric pressurization loading on the primary shield wall, reactor pressure vessel, and neutron shield tank.

b. Based on weighted average of mill test reports.

Table 12A-4

REACTOR PRESSURE VESSEL NOZZLE SUPPORT LOADS PHASE, INCLUDING REACTOR PRESSURE VESSEL INTERNALS MOVEMENT, ASYMMETRIC PRESSURE, DEADWEIGHT, AND SEISMIC

		Loads at Nozzle Supports (kips)											
		1		2		3		4		5		6	
Comment	Time (sec)	F_H	F_V	F_H	F_V	F_H	F_V	F_H	F_V	F_H	F_V	F_H	F_V
Maximum horizontal	0.07373	1253	291	-1224	910	-321	1249	-1238	925	986	58	239	-1647
Maximum vertical - up	0.1650	517	551	488	380	-171	302	-509	403	-403	610	-158	666
Maximum vertical - down	0.1400	974	-1275	925	-597	-252	-76	-962	-549	-749	-1508	264	-2120
Maximum relative horizontal	0.1350	1139	-973	1090	-886	-284	-663	-1126	-811	-880	-1004	232	-1382
Maximum rotation	0.0800	1233	-318	1197	702	-312	1151	-1216	841	-962	746	291	-2643

Table 12A-5
RELATIVE DISPLACEMENT BETWEEN TOP AND BOTTOM OF NOZZLE SUPPORT [a]

Nozzle Support [b]		Maximum Horizontal at RPV (time = 0.07373 sec)	Maximum Vertical - Up at RPV (time = 0.165 sec)	Maximum Vertical - Down at RPV (time = 0.140 sec)	Maximum Relative Horizontal Between RPV and PSW (time = 0.135 sec)	Maximum Rotational at RPV (time = 0.080 sec)
1	D_H	0.040100	0.018163	0.030514	0.036592	0.039348
	D_V	0.009822	0.025877	-0.008919	-0.006801	-0.001930
2	D_H	0.040000	0.014012	0.029768	0.035851	0.038988
	D_V	0.040737	0.016620	-0.004422	-0.006620	0.027734
3	D_H	-0.008066	-0.002929	-0.005692	-0.006815	-0.007745
	D_V	0.057320	0.011255	-0.000949	-0.005331	0.047834
4	D_H	-0.039262	-0.013612	-0.029809	-0.035804	-0.038403
	D_V	0.041790	0.017877	-0.004280	-0.006277	0.034381
5	D_H	-0.031263	-0.010673	-0.023157	-0.028006	-0.030362
	D_V	-0.000081	0.030184	-0.010780	-0.007147	-0.005164
6	D_H	0.003300	0.000854	0.003795	0.003067	0.004534
	D_V	-0.010485	0.035061	-0.014138	-0.008331	-0.017848

a. Key: RPV = reactor pressure vessel; PSW = primary shield wall.

b. Negative value for D_v means nozzle support in compression, and positive value means nozzle support in tension.

Figure 12A-1
PLAN VIEW OF OPERATING FLOOR SHOWING DETECTOR LOCATIONS

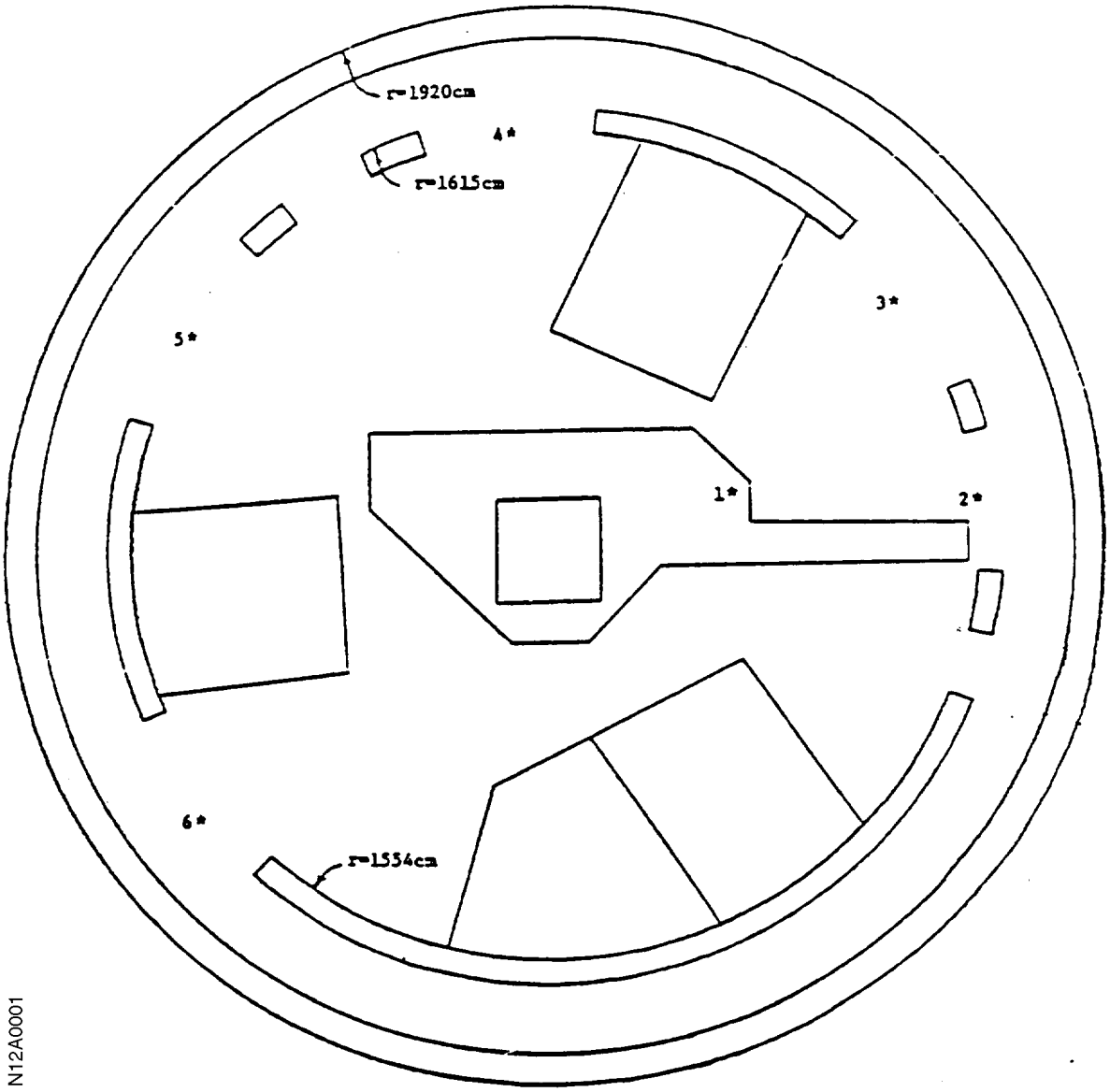

N12A0001

Figure 12A-2
COLLAR DETAILS

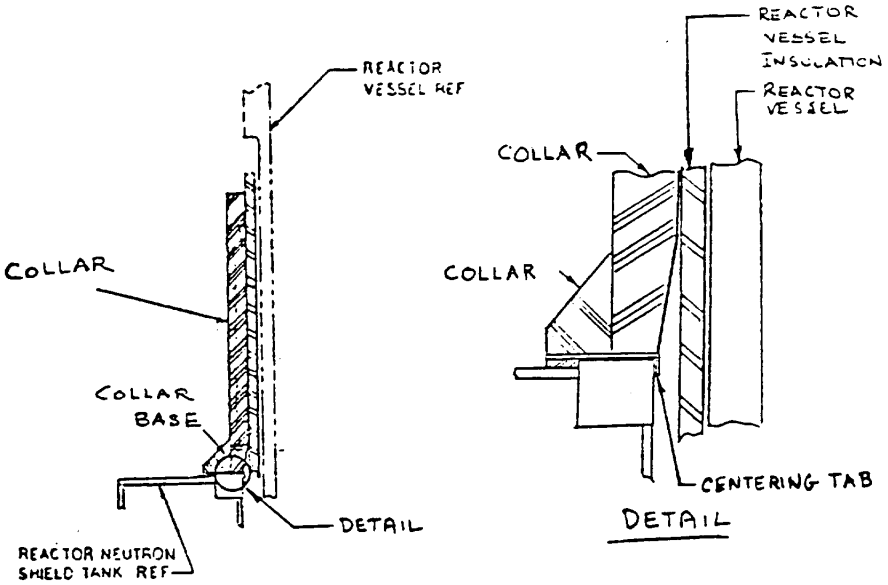

SIDE VIEW OF COLLAR ASSEMBLY

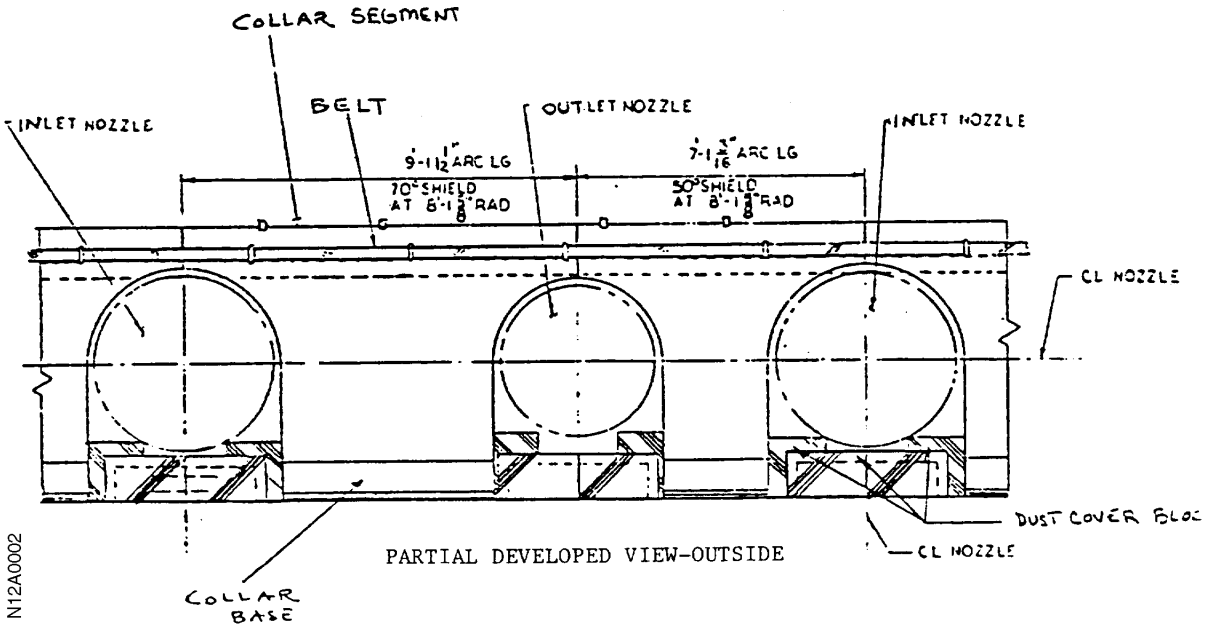

PARTIAL DEVELOPED VIEW-OUTSIDE

Figure 12A-3
SADDLE DETAILS

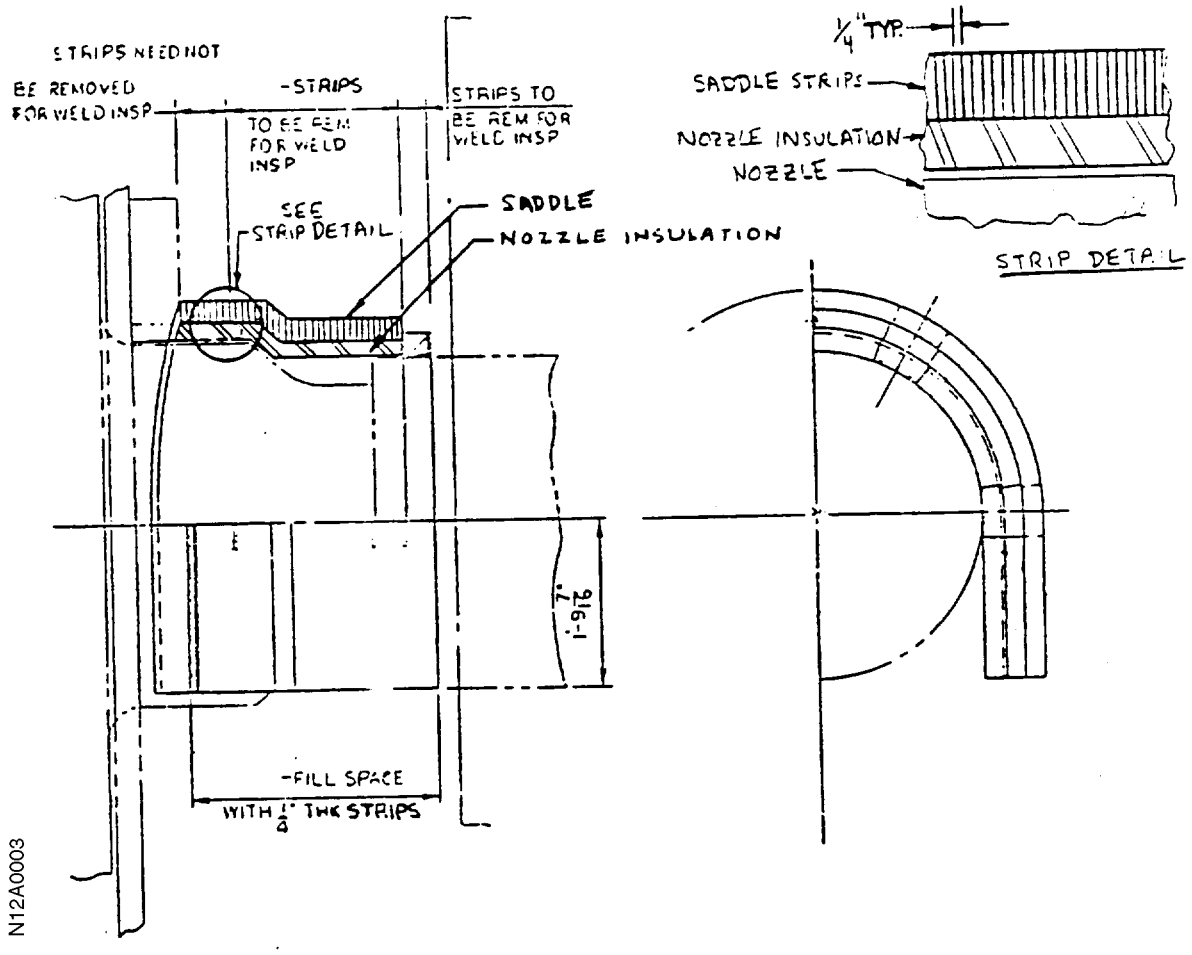

Figure 12A-4
SHIELD DUST COVER BLOCKS

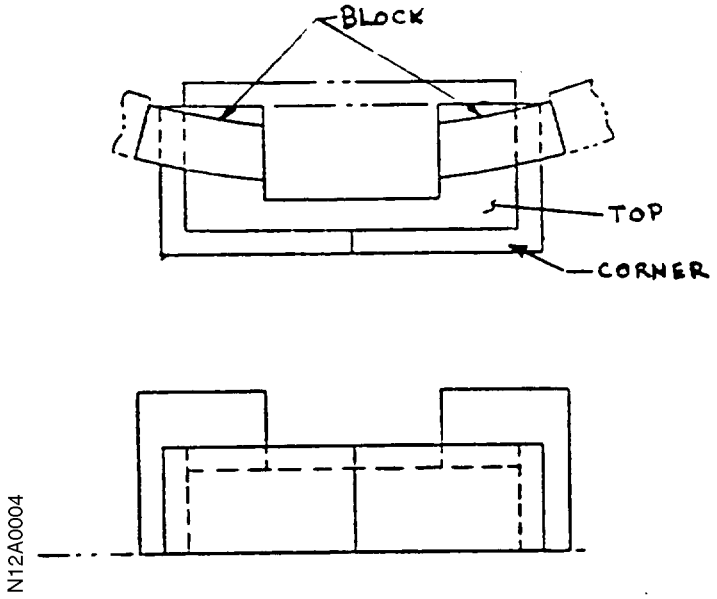

Figure 12A-5
CRANE WALL OPENINGS WITH PERMALI
ELEVATION 291 FT. 10 IN.

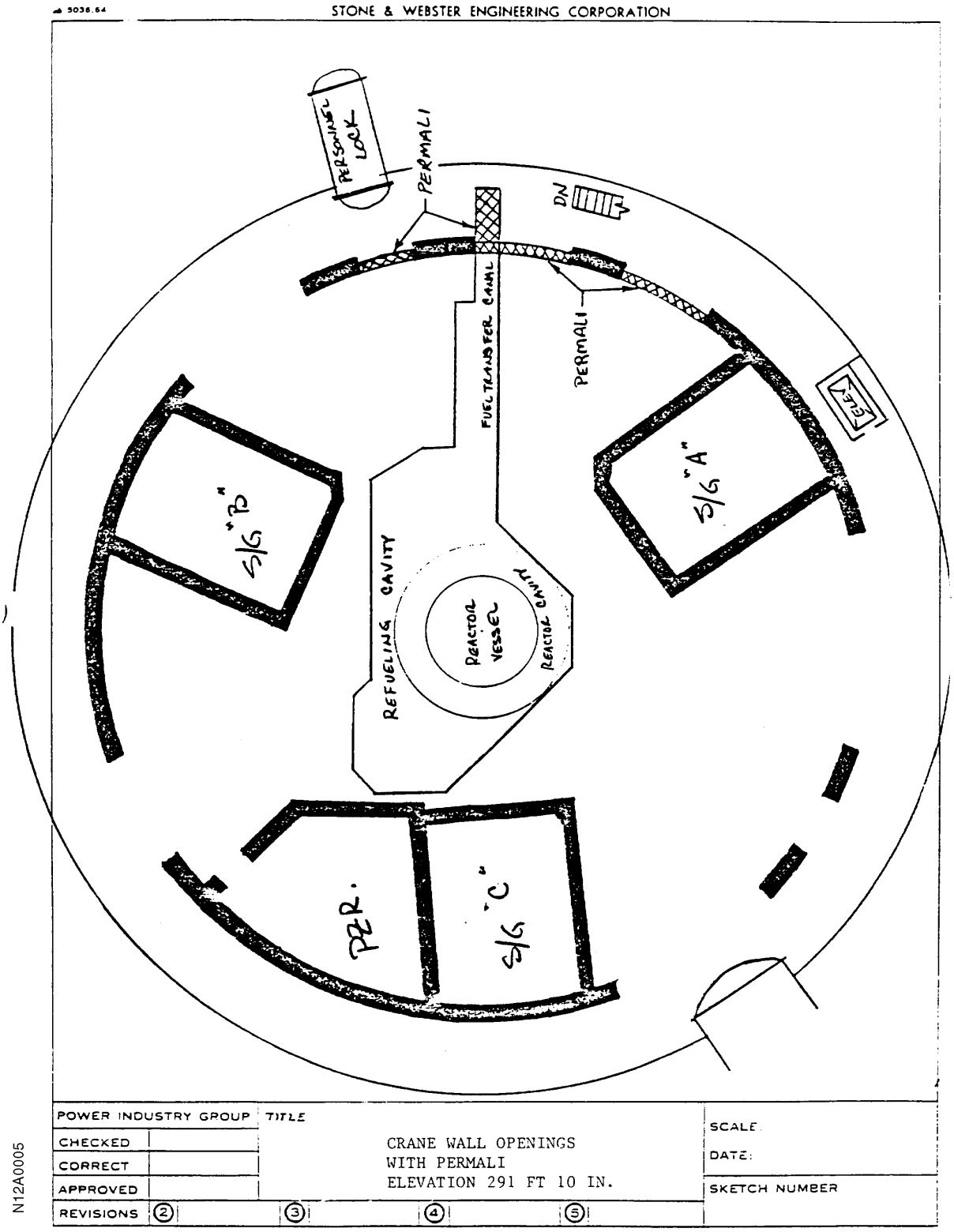

Figure 12A-6
LOCATION OF SUPPLEMENTARY NEUTRON SHIELDS

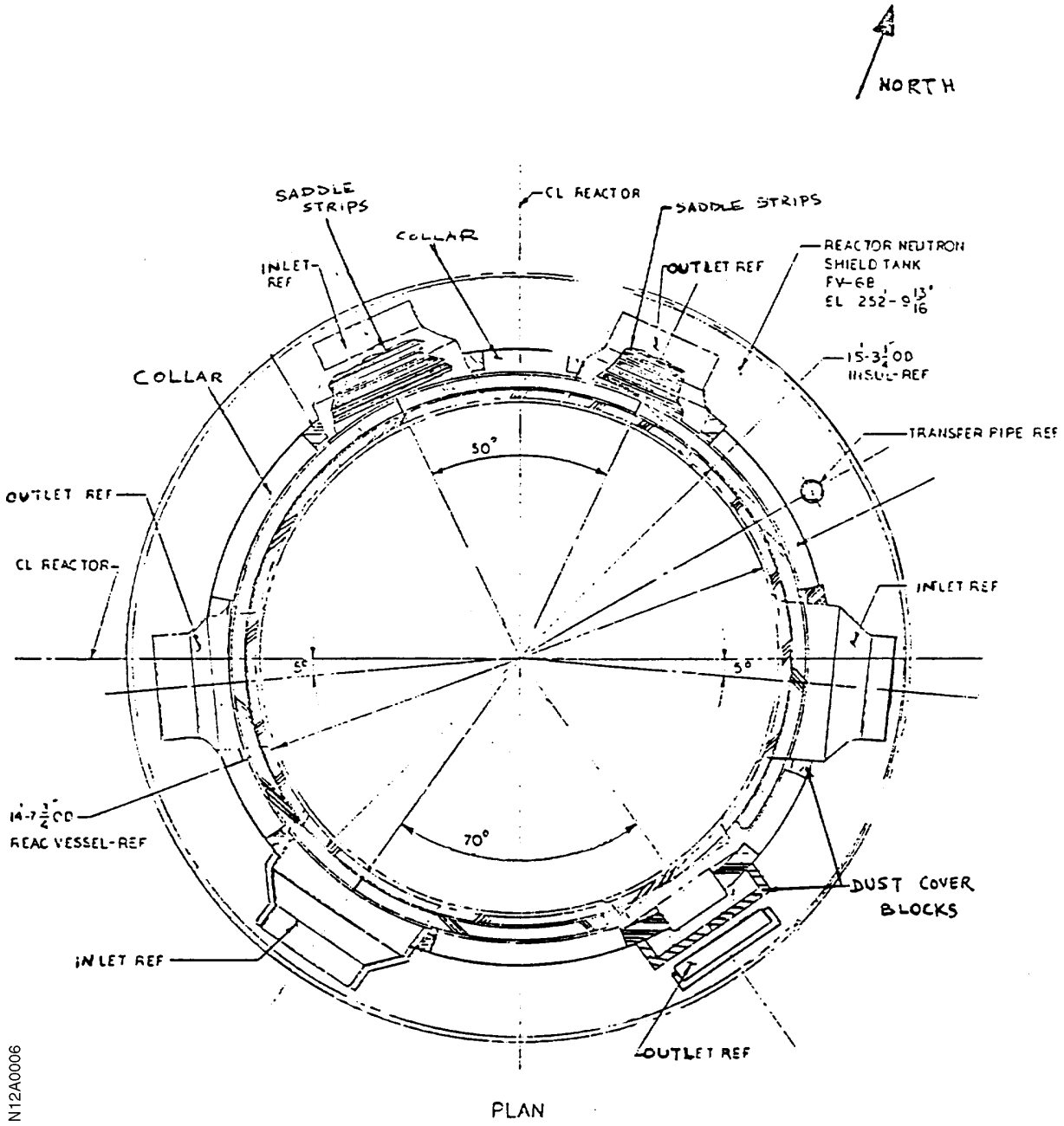

Figure 12A-7
RPV NOZZLE SUPPORT LOADS

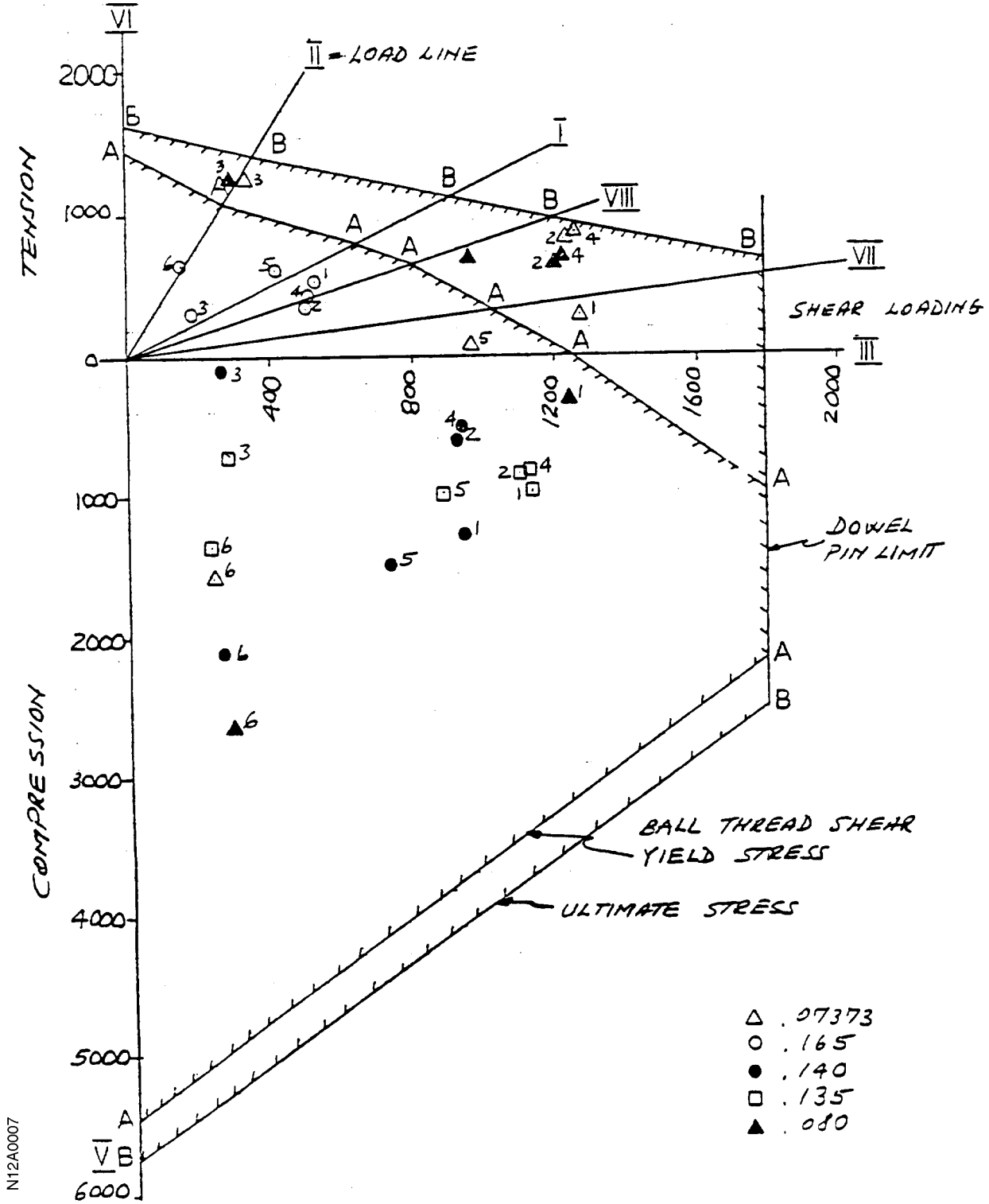

Intentionally Blank