Chapter 5: Reactor Coolant System
Table of Contents

Section	Title	Page
5.1	SUMMARY DESCRIPTION	5.1-1
5.1.1	Reactor Coolant System Components	5.1-2
5.1.1.1	Reactor Vessel	5.1-2
5.1.1.2	Steam Generators	5.1-2
5.1.1.3	Reactor Coolant Pumps	5.1-2
5.1.1.4	Piping	5.1-2
5.1.1.5	Pressurizer	5.1-3
5.1.1.6	Pressurizer Relief Tank	5.1-3
5.1.1.7	Safety and Relief Valves	5.1-3
5.1.1.8	Loop Stop Valves	5.1-3
5.1.1.9	Reactor Vessel Head Shielding	5.1-3
5.1.2	Reactor Coolant System Performance and Safety Functions	5.1-3
5.1.2.1	Reactor Coolant Flow	5.1-4
5.1.2.2	Interrelated Performance and Safety Functions	5.1-6
5.1.3	System Operation	5.1-7
5.1.3.1	Plant Start-up	5.1-7
5.1.3.2	Power Generation and Hot Shutdown	5.1-8
5.1.3.3	Plant Shutdown	5.1-9
5.1.3.4	Refueling	5.1-10
5.1.3.5	Loss of Decay Heat Removal	5.1-10
5.1	References	5.1-12
5.1	Reference Drawings	5.1-12
5.2	INTEGRITY OF THE REACTOR COOLANT SYSTEM BOUNDARY	5.2-1
5.2.1	Design Criteria Methods and Procedures	5.2-1
5.2.1.1	Performance Objectives and Design Conditions	5.2-1
5.2.1.2	Design Evaluation	5.2-9
5.2.2	Overpressurization Protection	5.2-17
5.2.2.1	Normal Operation	5.2-17
5.2.2.2	Start-up and Shutdown	5.2-18
5.2.2.3	Water-Solid Protection	5.2-20
5.2.2.4	Pressurized Thermal Shock	5.2-20
5.2.3	Material Considerations	5.2-21
5.2.3.1	Materials of Construction	5.2-21
5.2.3.2	Chemistry Control	5.2-29

Chapter 5: Reactor Coolant System
Table of Contents
(continued)

Section	Title	Page
5.2.3.3	Fracture Prevention	5.2-30
5.2.3.4	Cleaning and Contamination Protection	5.2-34
5.2.4	Reactor Coolant Pressure Boundary Leakage Detection Systems	5.2-36
5.2.4.1	Leakage to the Containment	5.2-36
5.2.4.2	N-16 Primary to Secondary Leakage Detection System	5.2-40
5.2.5	Inservice Inspection Programs	5.2-41
5.2.5.1	Program	5.2-41
5.2.5.2	Inservice Inspection Equipment	5.2-44
5.2.5.3	Loose Parts Monitoring	5.2-44
5.2.5.4	Vibration Monitoring	5.2-45
5.2	References	5.2-46
5.3	THERMAL-HYDRAULIC SYSTEM DESIGN	5.3-1
5.4	REACTOR VESSEL AND APPURTENANCES	5.4-1
5.4.1	Design Bases	5.4-1
5.4.1.1	Codes and Specifications	5.4-1
5.4.1.2	Design Transients	5.4-1
5.4.1.3	Protection Against Nonductile Failure	5.4-1
5.4.1.4	Inspection	5.4-2
5.4.2	Description	5.4-2
5.4.2.1	Fabrication Processes	5.4-3
5.4.3	Evaluation	5.4-4
5.4.3.1	Steady-State Stresses	5.4-4
5.4.3.2	Fatigue Analysis Based on Transient Stresses	5.4-4
5.4.3.3	Thermal Stresses Due to Gamma Heating	5.4-4
5.4.3.4	Thermal Stresses Due to a LOCA	5.4-4
5.4.3.5	Heatup and Cooldown	5.4-4
5.4.3.6	Irradiation Surveillance Program	5.4-4
5.4.3.7	Capability for Annealing the Reactor Vessel	5.4-11
5.4.4	Tests and Inspections	5.4-11
5.4.4.1	Ultrasonic Examinations	5.4-12
5.4.4.2	Penetrant Examinations	5.4-12
5.4.4.3	Magnetic Particle Examinations	5.4-12
5.4.4.4	Inservice Inspection	5.4-12

Chapter 5: Reactor Coolant System
Table of Contents
(continued)

Section	Title	Page
5.4	References	5.4-13
5.5	COMPONENT AND SUBSYSTEM DESIGN	5.5-1
5.5.1	Reactor Coolant Pumps	5.5-1
5.5.1.1	Design Bases	5.5-1
5.5.1.2	Design Description	5.5-1
5.5.1.3	Design Evaluation	5.5-3
5.5.1.4	Tests and Inspections	5.5-7
5.5.2	Steam Generator	5.5-11
5.5.2.1	Design Bases	5.5-11
5.5.2.2	Design Description	5.5-11
5.5.2.3	Design Evaluation	5.5-12
5.5.2.4	Tests and Inspections	5.5-15
5.5.3	Reactor Coolant Piping	5.5-16
5.5.3.1	Design Bases	5.5-16
5.5.3.2	Design Description	5.5-16
5.5.3.3	Design Evaluation	5.5-19
5.5.3.4	Tests and Inspections	5.5-20
5.5.4	Residual Heat Removal System	5.5-20
5.5.4.1	Design Bases	5.5-20
5.5.4.2	System Description	5.5-21
5.5.4.3	Design Evaluation	5.5-25
5.5.4.4	Tests and Inspections	5.5-28
5.5.5	Pressurizer	5.5-28
5.5.5.1	Design Bases	5.5-28
5.5.5.2	Design Description	5.5-29
5.5.5.3	Design Evaluation	5.5-30
5.5.5.4	Tests and Inspections	5.5-33
5.5.6	Pressurizer Relief Tank	5.5-34
5.5.6.1	Design Bases	5.5-34
5.5.6.2	Design Description	5.5-34
5.5.6.3	Design Evaluation	5.5-35
5.5.7	Valves Other Than Safety and Relief Valves	5.5-35
5.5.7.1	Design Bases	5.5-35
5.5.7.2	Design Description	5.5-36

Chapter 5: Reactor Coolant System
Table of Contents
(continued)

Section	Title	Page
5.5.7.3	Design Evaluation	5.5-37
5.5.7.4	Tests and Inspections	5.5-37
5.5.8	Safety and Relief Valves	5.5-37
5.5.8.1	Design Bases	5.5-37
5.5.8.2	Design Description	5.5-38
5.5.8.3	Design Evaluation	5.5-39
5.5.8.4	Tests and Inspections	5.5-41
5.5.9	Reactor Coolant System Equipment Supports	5.5-41
5.5.9.1	Design Basis	5.5-41
5.5.9.2	Description	5.5-42
5.5.9.3	Evaluation	5.5-45
5.5.10	Reactor Coolant Vent System	5.5-48
5.5.10.1	Design Bases	5.5-48
5.5.10.2	Design Description	5.5-48
5.5.10.3	Design Evaluation	5.5-50
5.5.10.4	Tests and Inspections	5.5-52
5.5	References	5.5-52
5.5	Reference Drawings	5.5-53
5.6	INSTRUMENTATION APPLICATION	5.6-1
5.6.1	Design Bases	5.6-1
5.6.2	Description	5.6-2
5.6.2.1	Temperature Measuring Instrumentation	5.6-2
5.6.2.2	Flow Indication	5.6-4
5.6.2.3	Pressure Indication	5.6-4
5.6.2.4	Liquid Level Indication	5.6-6
5.6.3	Evaluation	5.6-7
5.6	Reference Drawings	5.6-8
Appendix 5A	Discussion Between the Nuclear Regulatory Commission and Virginia Electric & Power Company on Steam Generator Lower and Reactor Coolant Pump Supports for North Anna Units No. 1 and 2	5A-1

Chapter 5: Reactor Coolant System
List of Tables

Table	Title	Page
Table 5.1-1	System Design and Operating Parameters	5.1-14
Table 5.2-1	ASME Code Cases for Westinghouse PWR Class 1 Components	5.2-48
Table 5.2-2	ASME Code Cases for Class 1 Components	5.2-51
Table 5.2-3	Equipment Code and Classification List	5.2-52
Table 5.2-4	Summary of Reactor Coolant System Design Transients	5.2-55
Table 5.2-5	Steam Generator Primary/Secondary Boundary Components	5.2-56
Table 5.2-6	Steam Generator Primary/Secondary Boundary Components	5.2-57
Table 5.2-7	Steam Generator Primary/Secondary Boundary Components	5.2-57
Table 5.2-8	Steam Generator Primary/Secondary Boundary Components	5.2-58
Table 5.2-9	Steam Generator Primary/Secondary Boundary Components	5.2-58
Table 5.2-10	Steam Generator Primary/Secondary Boundary Components	5.2-58
Table 5.2-11	Steam Generator Primary/Secondary Boundary Components	5.2-59
Table 5.2-12	Limit Analysis Calculations Results	5.2-60
Table 5.2-13	Load Combinations and Operating Conditions	5.2-60
Table 5.2-14	Loading Conditions and Stress Limits: Class A Components	5.2-61
Table 5.2-15	Loading Conditions and Stress Limits: Nuclear Power Piping	5.2-62
Table 5.2-16	Faulted Condition Stress Limits for Class A Components	5.2-63
Table 5.2-17	Faulted Condition Loads for the Reactor Coolant Pump Feet	5.2-64
Table 5.2-18	Operating and Inactive Valves in the Reactor Coolant System Boundary	5.2-65
Table 5.2-19	Active Valves in the Reactor Coolant Pressure Boundary	5.2-67
Table 5.2-20	RT_{PTS} Values for North Anna Unit 1	5.2-68
Table 5.2-21	RT_{PTS} Values for North Anna Unit 2	5.2-68
Table 5.2-22	Reactor Coolant Pressure Boundary Materials	5.2-69
Table 5.2-23	Reactor Coolant Pressure Boundary Materials Auxiliary Components	5.2-73
Table 5.2-24	Reactor Vessel Internals for Emergency Core Cooling	5.2-75
Table 5.2-25	Reactor Coolant Water Chemistry Specification	5.2-76
Table 5.2-26	Pre-irradiation Reactor Vessel Toughness Table (Unit 1)	5.2-77
Table 5.2-27	Pre-irradiation Reactor Vessel Toughness Table (Unit 2)	5.2-79
Table 5.2-28	Preservice Inspection Program	5.2-81
Table 5.4-1	Reactor Vessel Design Parameters	5.4-14
Table 5.4-2	Surveillance Capsule Withdrawal Schedule for North Anna Unit 1	5.4-15
Table 5.4-3	Surveillance Capsule Withdrawal Schedule for North Anna Unit 2	5.4-16
Table 5.4-4	Reactor Vessel Quality Assurance Program	5.4-17
Table 5.4-5	Reactor Vessel Closure Head Quality Assurance Program	5.4-18
Table 5.5-1	Reactor Coolant Pump Design Parameters	5.5-54
Table 5.5-2	Reactor Coolant Pump Quality Assurance Program	5.5-55
Table 5.5-3	Steam Generator Design Data	5.5-56
Table 5.5-4	Steam Generator Quality Assurance Program	5.5-57
Table 5.5-5	Reactor Coolant Piping Design Parameters	5.5-58
Table 5.5-6	Reactor Coolant Thermal Sleeve Removal	5.5-59

Chapter 5: Reactor Coolant System
List of Tables
(continued)

Table	Title	Page
Table 5.5-7	Reactor Coolant Piping Quality Assurance Program	5.5-60
Table 5.5-8	Design Bases for Residual Heat Removal System Operation	5.5-60
Table 5.5-9	Residual Heat Removal System Codes and Classifications	5.5-61
Table 5.5-10	Residual Heat Removal System Component Data	5.5-62
Table 5.5-11	Pressurizer Design Data	5.5-63
Table 5.5-12	Reactor Coolant System Design Pressure Typical Settings (psig)	5.5-63
Table 5.5-13	Pressurizer Quality Assurance Program	5.5-64
Table 5.5-14	Pressurizer Relief Tank Design Data	5.5-65
Table 5.5-15	Reactor Coolant System Boundary Valve Design Parameters	5.5-65
Table 5.5-16	Reactor Coolant System Valve Quality Assurance Program	5.5-66
Table 5.5-17	Pressurizer Valves Design Parameters	5.5-67
Table 5.5-18	Maximum Steam Generator and Reactor Coolant Pump Foot Loads (kips)	5.5-68
Table 5.5-19	Maximum Load (kips), Supports	5.5-69
Table 5.5-20	Maximum Load (kips), Snubbers and Struts	5.5-69

Chapter 5: Reactor Coolant System
List of Figures

Figure	Title	Page
Figure 5.1-1	Reactor Coolant System	5.1-15
Figure 5.1-2	Original Design Basis Pump Head - Flow Characteristics	5.1-16
Figure 5.2-1	Primary-Secondary Boundary Components Shell Locations of Stress Investigations	5.2-85
Figure 5.2-2	Reactor Coolant Pump Casing with Support Feet	5.2-86
Figure 5.2-3	Reactor Coolant Pump Support Feet	5.2-87
Figure 5.2-4	Reactor Coolant System Water Solid Operation	5.2-88
Figure 5.2-5	Typical Reactor Coolant System Heatup Limitations Curve	5.2-89
Figure 5.2-6	Typical Reactor Coolant System Cooldown Limitations Curve	5.2-90
Figure 5.2-7	Effect of Fluence and Copper Content on Shift of RT_{NDT} for Reactor Vessel Steels Exposed to 550°F Temperature	5.2-91
Figure 5.2-8	Fluence Versus Full Power Years	5.2-92
Figure 5.2-9	KID Lower Bound Fracture Toughness A533V (Reference WCAP 7623) Grade B Class 1	5.2-93
Figure 5.2-10	Corten and Sailors Correlation	5.2-94
Figure 5.2-11	Containment Radiation Monitor Sensitivities	5.2-95
Figure 5.3-1	Temperature Versus Power	5.3-2
Figure 5.4-1	Reactor Vessel	5.4-19
Figure 5.4-2	Reactor Vessel Head	5.4-20
Figure 5.4-3	Specimen Guide to Thermal Shield Attachment	5.4-21
Figure 5.4-4	Typical Surveillance Capsule Elevation View	5.4-22
Figure 5.4-5	Surveillance Capsule, Plan View	5.4-23
Figure 5.5-1	Reactor Coolant Pump	5.5-70
Figure 5.5-2	Reactor Coolant Pump Estimated Performance Characteristic	5.5-71
Figure 5.5-3	51F Series Steam Generator	5.5-72
Figure 5.5-4	Residual Heat Removal System	5.5-73
Figure 5.5-5	Pressurizer	5.5-74
Figure 5.5-6	Reactor Coolant Loop Stop Valve	5.5-75
Figure 5.5-7	Reactor Vessel Support	5.5-76
Figure 5.5-8	Steam Generator and Reactor Coolant Pump	5.5-77
Figure 5.5-9	Steam Generator and Reactor Coolant Pump Lower Support	5.5-78
Figure 5.5-10	Load Paths Into Reinforced Concrete	5.5-79
Figure 5.5-11	Pressurizer Support	5.5-80
Figure 5.5-12	Dynamic Model of Steam Generator and Pump Supports	5.5-82
Figure 5.5-13	Steam Generator-Pump Supports Stress Model	5.5-84
Figure 5.5-14	Dynamic Model for Pressurizer Supports	5.5-85
Figure 5.5-15	Dynamic Model for Reactor Vessel Supports	5.5-86
Figure 5.5-16	Temperature Distribution in Snubber Assembly Between Steam Generator Support and Reactor Coolant Pump Support—Case 1, 105°F Ambient	5.5-87

Chapter 5: Reactor Coolant System
List of Figures
(continued)

Figure	Title	Page
Figure 5.5-17	Temperature Distribution in Snubber Assembly Between Steam Generator Support and Reactor Coolant Pump Support—Case 1, 70°F Ambient	5.5-88
Figure 5.5-18	Temperature Distribution in Snubber Assembly Between Steam Generator Support and Concrete Walls—Case 2, 105°F Ambient	5.5-89
Figure 5.6-1	Reactor Coolant System Process Control Instrumentation	5.6-9

Chapter 5
REACTOR COOLANT SYSTEM

5.1 SUMMARY DESCRIPTION

Note: As required by the Renewed Operating Licenses for North Anna Units 1 and 2, issued March 20, 2003, various systems, structures, and components discussed within this chapter are subject to aging management. The programs and activities necessary to manage the aging of these systems, structures, and components are discussed in Chapter 18.

The reactor coolant system, shown in Figure 5.1-1 and Reference Drawings 1 and 2, consists of similar heat transfer loops connected in parallel to the reactor vessel. Each loop contains a reactor coolant pump, a steam generator, and associated piping and valves. In addition, the system includes a pressurizer, a pressurizer relief tank, interconnecting piping and valves, a vent system, and instrumentation necessary for operational control. All the above components are located in the containment building. For arrangement drawings of the reactor coolant system, see Reference Drawings 4 through 10.

During operation, the reactor coolant system transfers the heat generated in the core to the steam generators, where steam is produced to drive the turbine generator. Borated demineralized water is circulated in the reactor coolant system at a flow rate and temperature consistent with achieving the reactor core thermal-hydraulic performance. The water also acts as a neutron moderator and reflector, and as a solvent for the neutron absorber used in chemical shim control.

The reactor coolant system pressure boundary provides a barrier against the release of radioactivity generated within the reactor and is designed to ensure a high degree of integrity throughout the life of the plant.

Reactor coolant system pressure is controlled by the use of the pressurizer, where water and steam are maintained in equilibrium by electrical heaters and water sprays. Steam can be formed (by the heaters) or condensed (by the pressurizer spray) to minimize pressure variations due to the contraction and expansion of the reactor coolant. Spring-loaded safety valves and power-operated relief valves are mounted on the pressurizer and discharge to the pressurizer relief tank, where the steam is condensed and cooled by mixing with water.

The extent of the reactor coolant system pressure boundary is defined as:

1. The reactor vessel, including housing for the control rod drive mechanism.
2. The reactor coolant side of the steam generators.
3. Reactor coolant pump casing.
4. A pressurizer attached to one of the reactor coolant loops.

5. Pressurizer safety and relief valves.
6. The interconnecting piping, valves, and fittings between the principal components listed above.
7. The pipings, fittings, and valves leading to connecting auxiliary or support systems, up to and including the second isolation valve (from the high-pressure side) on each line.
8. The reactor vessel head vent piping and fittings up to and including the 3/8 inch orifices.

The reactor coolant vent system provides the capability to vent the reactor vessel or the pressurizer using only safety-related equipment.

5.1.1 Reactor Coolant System Components

5.1.1.1 Reactor Vessel

The reactor vessel is cylindrical, with a welded hemispherical bottom head and a removable, flanged and gasketed, hemispherical upper head. The vessel contains the core, core-supporting structures, control rods, and other parts directly associated with the core.

The vessel has inlet and outlet nozzles located in a horizontal plane just below the reactor vessel flange but above the top of the core. Coolant enters the vessel through the inlet nozzles and flows down the core barrel-vessel wall annulus, turns at the bottom, and flows up through the core to the outlet nozzles.

5.1.1.2 Steam Generators

The steam generators are vertical shell and U-tube evaporators with integral moisture-separating equipment. The reactor coolant flows through the inverted U-tubes, entering and leaving through the nozzles located in the hemispherical bottom head of the steam generator. Steam is generated on the shell side and flows upward through the moisture separators to the outlet nozzle at the top of the steam generator shell.

5.1.1.3 Reactor Coolant Pumps

The reactor coolant pumps are single-speed centrifugal units driven by air-cooled, three-phase induction motors. The shaft is vertical, with the motor mounted above the pumps. A flywheel on the shaft above the motor provides additional inertia to extend pump coastdown. The inlet is at the bottom of the pump; discharge is on the side.

5.1.1.4 Piping

The reactor coolant loop piping is specified in sizes consistent with system requirements.

The hot-leg inside diameter is 29 inches and the cold-leg return line to the reactor vessel is 27.5 inches. The piping between the steam generator and the pump suction is increased to

31 inches in diameter to reduce the pressure drop and improve flow conditions to the pump suction.

5.1.1.5 Pressurizer

The pressurizer is a vertical cylindrical vessel with hemispherical top and bottom heads. Electrical heaters are installed through the bottom head of the vessel, while the spray nozzle and relief and safety valve connections are located in the top head of the vessel.

5.1.1.6 Pressurizer Relief Tank

The pressurizer relief tank is a horizontal cylindrical vessel with elliptical ends. Steam from the pressurizer safety and relief valves is discharged into the pressurizer relief tank through a sparger pipe under the water level. This condenses and cools the steam by mixing it with water that is near ambient temperature.

5.1.1.7 Safety and Relief Valves

The pressurizer safety valves are of the totally enclosed pop-type. The valves are spring-loaded and self-activated, and they have backpressure compensation. The power-operated relief valves limit system pressure for a large power mismatch and for overpressure protection when NDT protection is required. They are operated automatically or by remote manual control. Remotely operated valves are provided to isolate the inlet to the power-operated relief valves if excessive leakage occurs.

5.1.1.8 Loop Stop Valves

Reactor coolant loop stop valves are remotely controlled, motor-operated gate valves that permit any loop to be isolated from the reactor vessel. One valve is installed on each hot leg and one on each cold leg.

5.1.1.9 Reactor Vessel Head Shielding

The reactor vessel head shielding consists of cylindrical steel plate, one inch thick and six feet tall (ASTM A36) which is permanently attached to the intermediate lift ring by special mounting devices. The shielding is comprised of three (3) sections each spanning 120 degrees and weighing 3500 pounds. Cutouts are provided in the shielding for access to the cooling shroud nozzles and the core exit thermocouple nozzle assemblies (CETNAs).

5.1.2 Reactor Coolant System Performance and Safety Functions

The important design and performance characteristics of the reactor coolant system are provided in Table 5.1-1.

5.1.2.1 **Reactor Coolant Flow**

The reactor coolant flow, a major parameter in the design of the system and its components, was established in the original design with a detailed design procedure supported by operating plant performance data, by pump model tests and analyses, and by pressure-drop tests and analyses of the reactor vessel and fuel assemblies. By applying this design procedure described below, it was possible to specify the expected operating flow with reasonable accuracy. This procedure was validated with data from existing operating plants.

With this procedure, three reactor coolant flow rates (best estimate, thermal design, and mechanical design) were identified for the various plant design considerations for the original system design. The definitions of these flows are presented in the following paragraphs, and the application of the definitions is illustrated by the system and pump hydraulic characteristics on Figure 5.1-2.

Two additional reactor coolant flow rates (minimum measured and lower bounding flow) have been identified for specific design considerations. The definitions of these flows are also presented in the following paragraphs.

5.1.2.1.1 Design Flows

The best estimate flow is the most likely value for the actual plant operating condition. This flow is based on the best estimate of the reactor vessel, steam generator, and piping flow resistance, and on the best estimate of the reactor coolant pump head flow capacity, with no uncertainties assigned to either the system flow resistance or the pump head. Best estimate flow is used to calculate the core and vessel pressure drops that are listed in Tables 4.4-1 and 4.4-2. Although the best estimate flow is the most likely value to be expected in operation, more conservative flow rates are applied in the thermal and mechanical designs.

Thermal design flow is the basis for the reactor core thermal performance (except as noted below), the steam generator thermal performance, and the nominal plant parameters used throughout the design. To provide the required margin, the thermal design flow accounts for the uncertainties in reactor vessel, steam generator, and piping flow resistances; the reactor coolant pump head; and the methods used to measure flow rate. The current thermal design flow is not changed from the original design value.

Mechanical design flow is the conservatively high flow used in the mechanical design of the reactor vessel internals and fuel assemblies. To ensure that a conservatively high flow is specified, the mechanical design flow is based on a reduced system resistance and on increased pump head capability. The intersection of this flow resistance with the higher pump curve, as shown on Figure 5.1-2, establishes the mechanical design flow. Pump overspeed due to a turbine-generator overspeed of 20% results in a peak reactor coolant flow of 120% of the mechanical design flow. The overspeed condition is applicable only to operating conditions when the reactor and turbine

generator are at power. The current mechanical design flow is not changed from the original design value.

Minimum measured flow is the minimum allowable Reactor Coolant System Total Flow Rate as specified in the North Anna Units 1 and 2 Technical Specifications. This flow rate is less than the best-estimate flow rate and greater than the thermal design flow rate. The minimum measured flow, as stated in Section 5.1.2.2 is used to analyze those events for which the Virginia Power Statistical Evaluation Methodology is the governing DNB methodology. The current minimum measured flow was increased subsequent to steam generator replacement at North Anna.

The lower-bounding design flow is less than the minimum measured flow by an amount which accommodates the uncertainty associated with the methods used to measure, and confirm, the minimum allowable RCS Total Flow Rate. The lower-bounding design flow is greater than the thermal design flow and is used to analyze other DNBR-related transients and events which are limited by considerations such as heat sink or pressurization criteria. The lower-bounding design flow was established as a design condition subsequent to steam generator replacement at North Anna.

5.1.2.1.2 Current Thermal Hydraulic Design Flow Conditions

Several design changes to the RCS have occurred since the original design was installed at North Anna. These include (a) removal of flow straighteners on intake side of RCP, (b) change in fuel product from 17 x 17 standard fuel (also called LOPAR for LOw PARasitic) to North Anna Improved Fuel (NAIF; see Section 4.2.1), (c) removal of thimble plugging devices (Section 4.4.3.1.1), (d) uprating of the core thermal output to 2893 MWt, (e) replacement of the steam generators, and (f) introduction of the Advanced Mark-BW fuel product (see Section 4.5). Each of these changes had some impact on the RCS flow, however, the replacement of the steam generators had the most discernible impact on the RCS flow rate. The impact was due to the replacement of the original steam generators, which had significant tube plugging, with new steam generators which had increased flow area versus the original steam generators (approximately 6%).

The thermal hydraulic parameter values in Table 5.1-1 are consistent with uprated conditions: (a) thermal design flow of 278,400 gpm; (b) reactor coolant pressure of 2250 psia; (c) reactor power of 2898 MWt; (d) reactor coolant pump heat of 12 MWt; (e) vessel average temperature of 586.8°F; (f) core bypass of 4.5%; (g) steam pressure of 850 psia; and (h) feedwater inlet temperature of 440°F. It is noted that the current licensed maximum reactor power is 2893 MWt.

The information presented in this subsection was submitted as part of the original license application with the purpose of supporting operation with an idle loop. This operating condition was not approved by the NRC and has been subsequently prohibited in the North Anna Unit 1 and 2 operating license. Therefore, the information presented in this subsection is maintained for informational purposes only, but does not constitute the current licensing basis of the facilities.

5.1.2.1.3 Flows With One Pump Shut Down

The design procedure for calculation of flows with one pump shut down is similar to the procedure described above for calculating flows with all pumps operating. The flows listed in Table 5.1-1 are based on one or both stop valves being closed in the idle loop. For the case where reverse flow exists in the idle loop, the system resistance incorporates the idle loop with a locked rotor pump impeller reverse-flow resistance as a flow path in parallel with the reactor vessel internals. The thermal design flow uncertainty includes a conservative application of parallel flow uncertainties (reactor internals high, idle loop low) as well as the usual component, pump, and flow measurement uncertainties, thereby resulting in a conservatively low reactor flow rate for the thermal design. The mechanical design flow uncertainty is increased slightly to account for the slightly higher uncertainties at the higher pump flows.

5.1.2.2 Interrelated Performance and Safety Functions

The interrelated performance and safety functions of the reactor coolant system and its major components are listed below.

1. The reactor coolant system provides sufficient heat transfer capability to transfer the heat produced during power operation and when the reactor is subcritical, including the initial phase of plant cooldown, to the steam and power conversion system.
2. The system provides sufficient heat transfer capability to transfer the heat produced during the subsequent phase of plant cooldown and cold shutdown to the residual heat removal system.
3. The system heat removal capability under power operation and normal operational transients, including the transition from forced to natural circulation, ensures no fuel damage within the operating bounds permitted by the reactor control and protection systems.
4. The reactor coolant system provides the water used as the core neutron moderator and reflector and as a solvent for chemical shim control.
5. The system maintains the homogeneity of soluble neutron poison concentration and rate of change of coolant temperature such that uncontrolled reactivity changes do not occur.

6. The reactor vessel is an integral part of the reactor coolant system pressure boundary and is capable of accommodating the temperatures and pressures associated with the operational transients. The reactor vessel supports the reactor core and control rod drive mechanisms.
7. The pressurizer maintains the system pressure during operation and limits pressure transients. During a change in plant load, reactor coolant volume changes are accommodated in the pressurizer via the surge line.
8. The reactor coolant pumps supply the coolant flow necessary to remove heat from the reactor core and transfer it to the steam generators.
9. The steam generators provide high-quality steam to the turbine. The tube and tube sheet boundary prevent the transfer of activity generated within the core to the secondary system.
10. The reactor coolant system piping serves as a boundary for containing the coolant under operating temperature and pressure conditions and for limiting leakage (and activity release) to the containment atmosphere. The reactor coolant system piping contains demineralized borated water, which is circulated at the flow rate and temperature consistent with achieving the reactor core thermal and hydraulic performance.

5.1.3 System Operation

Brief descriptions of normal anticipated system operations are provided below. These descriptions cover plant start-up, power generation, hot shutdown, cold shutdown, and refueling.

5.1.3.1 Plant Start-up

Plant start-up encompasses the operations that bring the reactor plant from cold shutdown to no-load power operating temperature and pressure. A typical plant start-up from cold shutdown is described below.

Before plant start-up, the reactor coolant loops and pressurizer are filled completely, by the use of the charging pumps, with water containing the cold-shutdown concentration of boron. The secondary side of the steam generator is filled to normal start-up level with water that meets the steam plant water chemistry requirements.

For refueling, the water level is drained below the reactor vessel flange approximately 4 inches in order to remove the vessel head. Following a refueling, the reactor coolant system must be filled and vented prior to startup.

Gas pockets are vented from the reactor vessel head and the pressurizer by refilling the reactor coolant system. When the filling operation is initiated, the vessel head vent valve is kept open until all gas has been vented, thus venting the vessel head. The pressurizer vent lines are kept open while the pressurizer is filled, thus venting the pressurizer. The steam generator tubes are vented by alternately running the reactor coolant pump in each loop, thus sweeping the gas to the reactor vessel, where it is vented by the head vent.

The reactor coolant system is then pressurized to approximately 300 psig by the use of the low-pressure letdown control valve and the centrifugal charging pumps to obtain the required pressure drop across the No. 1 seal of the reactor coolant pumps. The pumps may then be operated intermittently to assist in venting operations.

During the operation of the reactor coolant pumps, one charging pump and the letdown path from the residual heat removal loop to the chemical and volume control system are used to maintain the reactor coolant system pressure between 325 and 375 psig. The operation of the reactor coolant pumps must not be initiated until the pressure differential across the No. 1 seal is at least 200 psi. For this condition, the system is maintained at approximately 300 psig; the temperature-dependent fracture-prevention pressure limitations of the reactor vessel impose an upper limit on system pressure. The fracture prevention limitations are provided in the Technical Specifications. The charging pump supplies seal injection water for the reactor coolant pump shaft seals. A nitrogen atmosphere and normal operating temperature, pressure, and water level are established in the pressurizer relief tank.

Upon completion of venting, the reactor coolant system is pressurized, all reactor coolant pumps are started, and the pressurizer heaters are energized to begin heating the reactor coolant. When the pressurizer temperature is approximately 425°F, a steam bubble is formed while the reactor coolant pressure is maintained in the range of 300 to 375 psig. The pressurizer liquid level is reduced until the no-load power-level volume is established. During the initial heatup phase, hydrazine is added to the reactor coolant to scavenge the oxygen in the system; the heatup is not taken beyond 200°F until the oxygen level has been reduced to the specified level.

The reactor coolant pumps and pressurizer heaters are used to heat the reactor coolant until the minimum temperature for criticality, as defined by the Technical Specifications, is reached.

As the reactor coolant temperature increases, the pressurizer heaters are manually controlled to maintain adequate suction pressure for the reactor coolant pumps. When the normal operating pressure of 2235 psig is reached, pressurizer heater and spray controls are transferred from manual to automatic control.

Refer to Section 5.2.2 regarding protection against the over-pressurization of the reactor coolant system while in a water-solid condition.

5.1.3.2 **Power Generation and Hot Shutdown**

Power generation includes steady-state operation, ramp changes not exceeding the rate of 5% of full power per minute, step changes of 10% of full power (not exceeding full power), and step load changes with steam dump not exceeding the design step load decrease.

During power generation, reactor coolant system pressure is maintained by the pressurizer controller at or near 2235 psig, while the pressurizer liquid level is controlled by the charging-letdown flow control of the chemical and volume control system.

When the reactor power level is less than approximately 15%, the reactor power is controlled manually. At power above approximately 15%, the reactor control system controls automatically maintain an average coolant temperature, consistent with the power relationships, by control rod movement.

During the hot-shutdown operations, when the reactor is subcritical, the reactor coolant system temperature is normally maintained by steam dump to the main condenser. This is accomplished by a controller located in the steam line and operating in the pressure control mode, set to maintain the steam generator steam pressure. Residual heat from the core or operation of a reactor coolant pump provides heat to overcome reactor coolant system heat losses.

5.1.3.3 **Plant Shutdown**

Plant shutdown encompasses the operations that bring the reactor plant from no-load power operating temperature and pressure to cold shutdown. A typical plant shutdown to cold shutdown is described below.

Before plant cooldown, concentrated boric acid solution from the chemical and volume control system is added to the reactor coolant system to increase the reactor coolant boron concentration to that required for cold shutdown. If the reactor coolant system is to be opened during the shutdown, the hydrogen and fission gas in the reactor coolant may be reduced by degassing the coolant in the volume control tank or by using the gas stripper in the boron recovery system.

Plant shutdown is accomplished in two phases. The first involves the combined use of the reactor coolant system and the steam systems; the second, the residual heat removal system. During the first phase of shutdown, residual core and reactor coolant heat is transferred to the steam system via the steam generator. Steam from the steam generator is dumped to the main condenser. At least one reactor coolant pump is kept running to ensure uniform reactor coolant system cooldown. The pressurizer heaters are energized and de-energized, and spray flow is manually controlled to cool the pressurizer and depressurize the reactor coolant system while maintaining the required reactor coolant pump suction pressure.

When the reactor coolant temperature is below approximately 350°F and the pressure is in the range of 400 to 450 psig, the second phase of shutdown commences with the operation of the residual heat removal system.

At least one reactor coolant pump is kept running until the coolant temperature is at approximately 160°F. At this temperature, the reactor coolant pump may be turned off.

Pressurizer cooldown can be continued by initiating auxiliary spray flow from the chemical and volume control system. Plant shutdown can continue until the reactor coolant temperature is 140°F or less.

5.1.3.4 **Refueling**

Before removing the reactor vessel head for refueling, the system temperature is reduced to 140°F or less, and hydrogen and fission product levels are reduced. Reactor vessel level during partial drain down is indicated by a local indicator and wide and narrow range indicators on the main control board to determine when the water has been drained below the reactor vessel head vent. Draining continues until the water level is below the reactor vessel flange. The vessel head is then raised as the refueling canal is flooded. Upon completion of refueling, the system is refilled for plant start-up.

5.1.3.5 **Loss of Decay Heat Removal**

Generic Letter 88-17, Loss of Decay Heat Removal, concerns the difficulties and potential consequences involved in preventing, and in recovering from, a loss of cooling to the core while the unit is shut down. (References 1 though 5) The concern resulted in several initiatives to ensure adequate protection from a loss of shutdown cooling, especially during reduced inventory conditions. Reduced inventory is defined to be a reactor coolant system (RCS) level lower than three feet below the reactor vessel flange. This corresponds to an inventory level of 42 inches above centerline of the RCS hot leg piping.

Adequate indication of RCS level and temperature, and of RHR system performance, is provided in the control room. A permanent RCS standpipe and an ultrasonic level detector are installed to ensure that at least two independent, continuous RCS level indications are monitored in the control room during reduced inventory conditions. Both level monitors provide indication, trending, and low-level alarms in the control room. Whenever the reactor vessel head is located on the reactor vessel, prior to draining the RCS to a reduced inventory condition, at least two core exit thermocouple (CET) temperature indicators are demonstrated to be operable. The CETs continuously indicate in the control room and are periodically recorded on the control room shutdown logs. When the CETs are disconnected due to vessel disassembly, the RHR system temperature indication remains operable and available in the control room. Continuous monitoring of the RHR system performance is provided in the control room by these instruments: suction and discharge temperature indication and trend recording, system flow indication, MOV position indication when energized, pump current indication, pump breaker status indication, system low-flow alarm, pump auto-trip alarm, pump discharge high-pressure alarm, pump cooling water low flow alarm, and component cooling status (e.g. temperature, flow, and pump current).

Controls are in place to implement specific actions to be taken when draining the RCS. Those actions are based on the Westinghouse Owners Group reduced inventory project guidance and additional plant-specific analyses. The analyses consider the variables affecting time to core

boiling, including RCS inventory, RCS temperature, time since shutdown, and total decay heat inventory. The analyses provide the necessary information to determine equipment and operation requirements or limitations, including:

1. Prior to entering a reduced inventory condition, controls are established to provide reasonable assurance containment closure can be achieved prior to the time that core uncovery could result from a loss of decay heat removal. During reduced inventory conditions, at least one boundary on each containment penetration is maintained intact, with the exception of penetrations in use or undergoing maintenance which are under administrative control. In the event of a loss of decay heat removal, a containment closure team is responsible for closing the administratively controlled penetrations.

2. Prior to entering a reduced inventory condition, one charging pump and one low head safety injection pump are maintained available with a specified flowpath to the core. Administrative controls ensure that additional means of shutdown cooling or inventory make-up are also available.

3. Whenever possible in a reduced inventory condition, activities are avoided that could disrupt stable conditions in the RCS or RHR system, or compensatory actions are taken. Maintenance activities are assessed prior to implementation for their potential to cause a loss of RCS inventory. Procedures include measures to prevent a loss of RHR and to enhance monitoring for early diagnosis of a loss of RHR.

4. To ensure that pressurization of the reactor vessel upper plenum does not occur upon a loss of cooling, procedures require that the cold leg isolation valve shall be closed first when isolating an RCS loop. When returning an RCS loop to service, the hot leg isolation valve shall be opened first. Whenever maintenance requires an opening on the cold leg during reduced inventory operation, procedural controls are in place to ensure a sufficient vent path is available.

These actions are adequate to ensure that decay heat removal capability is maintained.

5.1 REFERENCES

1. VEPCO Letter Serial No. 88-737, *Response to Generic Letter 88-17, Loss of Decay Heat Removal,* dated January 6, 1989.
2. VEPCO Letter Serial No. 88-737A, *Response to Generic Letter 88-17, Loss of Decay Heat Removal,* dated February 3, 1989.
3. VEPCO Letter Serial No. 88-737C, *Generic Letter 88-17: Loss of Decay Heat Removal Programmed Enhancements for Instrumentation,* dated October 3, 1989.
4. VEPCO Letter Serial No. 88-737D, *Supplemental Response to Generic Letter 88-17, Loss of Decay Heat Removal,* dated November 16, 1990.
5. VEPCO Letter Serial No. 91-447, *NRC Generic Letter 88-17, Loss of Decay Heat Removal Implementation of Programmed Enhancements,* dated November 14, 1991.

5.1 REFERENCE DRAWINGS

The list of Station Drawings below is provided for information only. The referenced drawings are not part of the UFSAR. This is not intended to be a complete listing of all Station Drawings referenced from this section of the UFSAR. The contents of Station Drawings are controlled by station procedure.

	Drawing Number	Description
1.	11715-FM-093A	Flow/Valve Operating Numbers Diagram: Reactor Coolant System; Loops 1, 2, & 3; Unit 1
	12050-FM-093A	Flow/Valve Operating Numbers Diagram: Reactor Coolant System; Loops 1, 2, & 3; Unit 2
2.	11715-FM-093B	Flow/Valve Operating Numbers Diagram: Reactor Coolant System, Unit 1
	12050-FM-093B	Flow/Valve Operating Numbers Diagram: Reactor Coolant System, Unit 2
3.	11715-FM-093E	Flow/Valve Operating Numbers Diagram: Reactor Coolant Pump Oil Collection, Unit 1
	12050-FM-093E	Flow/Valve Operating Numbers Diagram: Reactor Coolant Pump Oil Collection, Unit 2

	Drawing Number	Description
4.	11715-FM-1A	Machine Location: Reactor Containment, Plan, Elevation 291'- 10", Unit 1
	12050-FM-1A	Machine Location: Reactor Containment, Plan, Elevation 291'- 10", Unit 2
5.	11715-FM-1B	Machine Location: Reactor Containment, Plan, Elevation 262'- 10", Unit 1
	12050-FM-1B	Machine Location: Reactor Containment, Plan, Elevation 262'- 10", Unit 2
6.	11715-FM-1C	Machine Location: Reactor Containment, Plan, Elevation 241'- 0", Unit 1
	12050-FM-1C	Machine Location: Reactor Containment, Plan, Elevation 241'- 0", Unit 2
7.	11715-FM-1D	Machine Location: Reactor Containment, Plan, Elevation 216'- 11", Unit 1
	12050-FM-1D	Machine Location: Reactor Containment, Plan, Elevation 216'- 11", Unit 2
8.	11715-FM-1E	Machine Location: Reactor Containment, Sections 1-1 & 5-5, Unit 1
	12050-FM-1E	Machine Location: Reactor Containment; Sections 1-1, 7-7, 8-8, & 9-9; Unit 2
9.	11715-FM-1F	Machine Location: Reactor Containment; Sections 2-2, 6-6, 7-7, & 10-10; Unit 1
	12050-FM-1F	Machine Location: Reactor Containment; Sections 2-2, 5-5, & 6-6; Unit 2
10.	11715-FM-1G	Machine Location: Reactor Containment, Sections 3-3 & 4-4, Unit 1
	12050-FM-1G	Machine Location: Reactor Containment, Sections 3-3 & 4-4, Unit 2

Table 5.1-1
SYSTEM DESIGN AND OPERATING PARAMETERS

Plant design life	60 years [a]
Nominal operating pressure	2235 psig
Total system volume including pressurizer and surge line	10,000 ft^3 (approximately)
System liquid volume, including pressurizer water at maximum guaranteed power	9390 ft^3 (approximately)
Total nuclear steam supply system heat output at full power	9929×10^6 Btu/hr
Total coolant flow rate	104.3×10^6 lb/hr
System thermal and hydraulic data	
Reactor vessel	
Inlet temperature	552.3°F
Outlet temperature	621.2°F
ΔP (at T = 552.3°F)	52.6 psid
Steam generator	
Inlet temperature	621.2°F
Outlet temperature	552.0°F
ΔP (at T = 552.3°F)	34.6 psid
Design fouling factor	0.00005
Piping	
ΔP (at T = 552.3°F)	12.6 psid
Reactor coolant pump	
Inlet temperature	552.0°F
Outlet temperature	552.3°F
Developed head (at T = 552.3°F)	99.8 psid
Developed head	312 ft
Flow (each)	92,800 gpm
Steam pressure at full power	850 psia
Steam flow at full power (total)	12.78×10^6 lb/hr
Feedwater inlet temperature	440°F
Pressurizer spray rate, maximum	880 gpm
Pressurizer heater capacity	1400 kW
Pressurizer relief tank volume	1300 ft^3

a. Original design life was 40 years. The evaluation and management of aging components in this system demonstrate the acceptability of the design life of 60 years.

Figure 5.1-1
REACTOR COOLANT SYSTEM

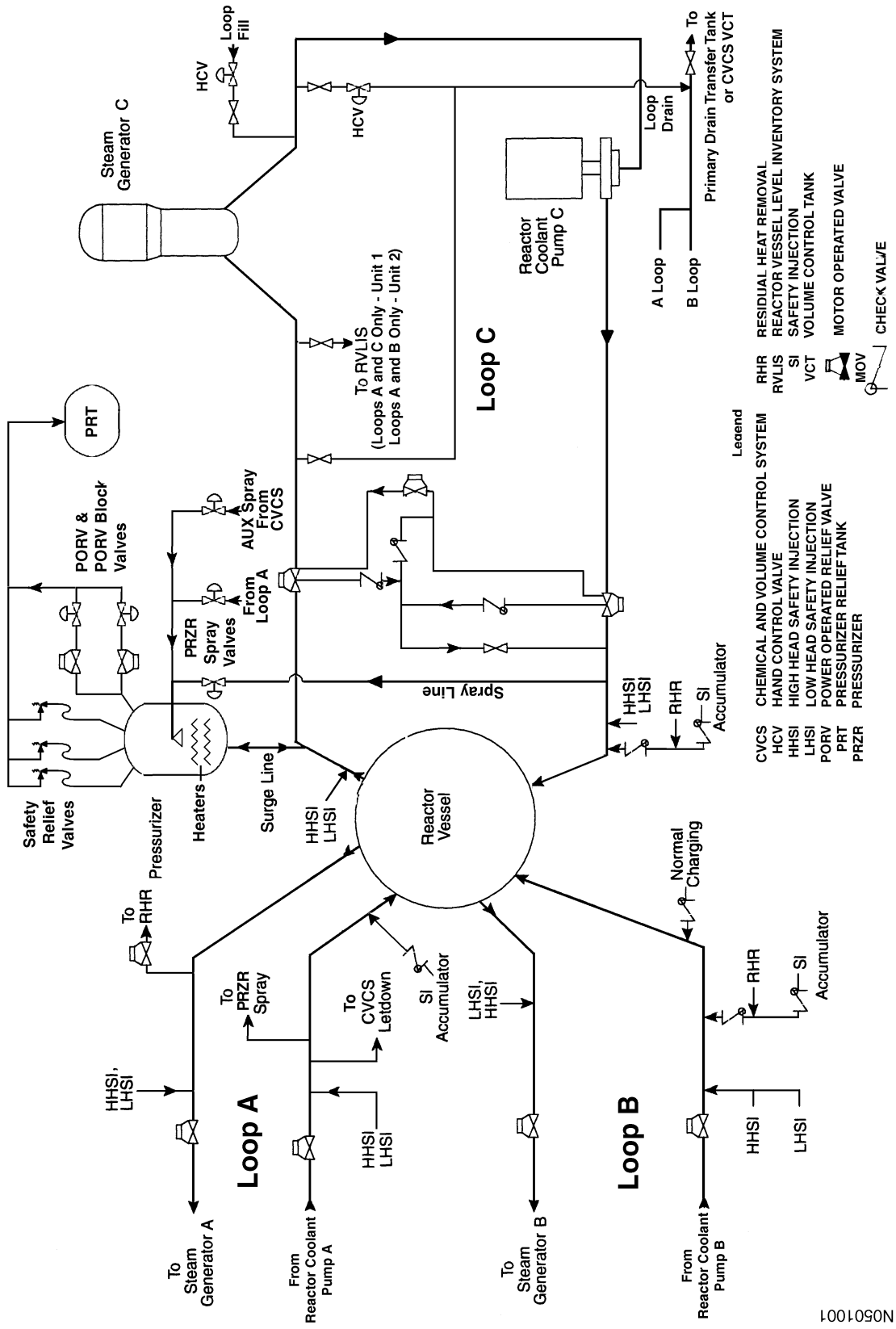

Figure 5.1-2
ORIGINAL DESIGN BASIS PUMP HEAD - FLOW CHARACTERISTICS [a]

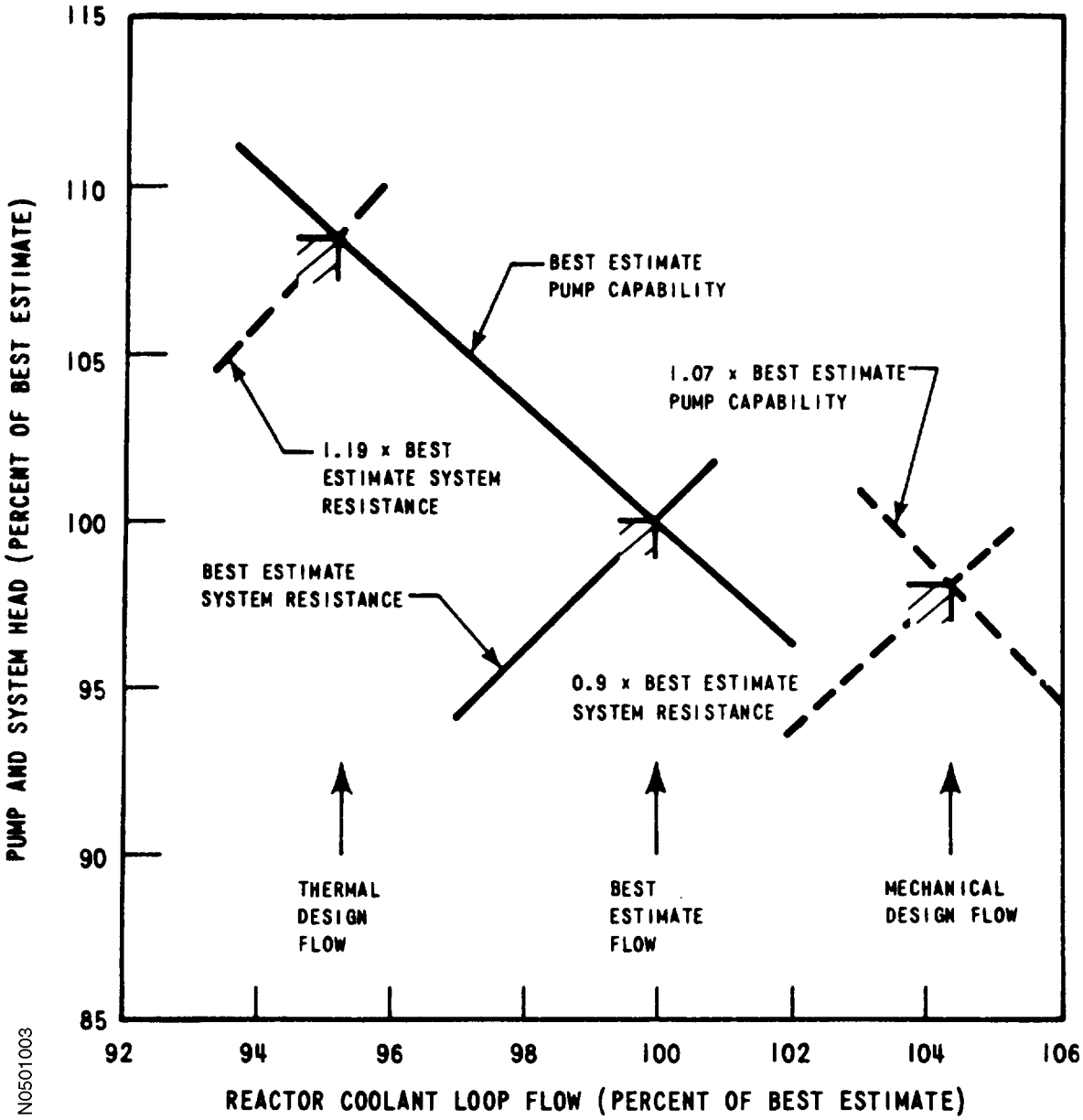

a. The information contained in the figure portrays the original Westinghouse design philosophy with respect to reactor coolant system flows. Virginia Power has defined additional reactor coolant flow parameters as described in Section 5.1.2.1.1, Design Flows.

5.2 INTEGRITY OF THE REACTOR COOLANT SYSTEM BOUNDARY

Reactor coolant system and components are designed and fabricated in accordance with the rules of 10 CFR 50.55a, *Codes and Standards*, except for certain valves. Based on the projected date of October 1970 for the construction permit, the valves within the reactor coolant system pressure boundary were ordered and supplied in accordance with the requirements of USAS B31.1, 1967, plus addendum, USAS B16.5, and MSS-SP-66. Pressurizer relief valves were ordered and supplied in accordance with USAS B16.5. The original pressurizer safety valves were supplied in accordance with ASME III, 1968 edition. Thus due to the delay in obtaining the actual construction permit until February 1971, the aforementioned valves are not fabricated in accordance with 10 CFR 50.55a. Subsequently, a spare set of valves was procured to ASME III, 2001 edition through 2003 addenda as augmented by 10 CFR 50.55a and Regulatory Guide 1.84. The spare set is used at North Anna Power Station Units 1 and 2 as rotating stock items.

The reactor coolant system boundary is designed to accommodate the system pressures and temperatures attained under all expected modes of plant operation, including all anticipated transients, and to maintain the stresses within applicable stress limits. The system is protected from overpressure by means of pressure-relieving devices, as required by applicable codes. Materials of construction are specified to minimize corrosion and erosion and to provide a structural system boundary throughout the life of the plant. Fracture prevention measures are taken to prevent brittle fracture. Inspection is in accordance with applicable codes, and provisions are made for the surveillance of critical areas to enable periodic assessments of the boundary integrity.

In accordance with the guidelines of the ASME Code, various ASME-approved Code Cases were used. No specific record of such uses was maintained. The Code Case identified in Table 5.2-1 may have been used for Westinghouse Class 1 components by Westinghouse or by subcontractors or vendors. Table 5.2-2 identifies an ASME Code Case for Class 1 components.

5.2.1 Design Criteria Methods and Procedures

5.2.1.1 Performance Objectives and Design Conditions

The performance objectives of the reactor coolant system were described in Section 5.1. Equipment code and classification lists for the components in the reactor coolant system boundary are in Table 5.2-3.

The reactor coolant system, in conjunction with the reactor control and protection systems, is designed to maintain the reactor coolant at conditions of temperature, pressure, and flow adequate to protect the core from damage. The design requirement for safety is to prevent conditions of high power, high reactor coolant temperature, or low reactor coolant pressure, or combinations of these that could result in a DNB ratio of less than the design DNBR limit.

The reactor coolant system is designed to provide controlled changes in the boric acid concentration and the reactor coolant temperature. The reactor coolant is the core moderator, reflector, and solvent for the chemical shim. As a result, changes in coolant temperature or boric acid concentration affect the reactivity level in the core.

The following design bases have been selected to ensure that uniform reactor coolant system boron concentration and temperature will be maintained:

1. Coolant flow is provided by either a reactor coolant pump or a residual heat removal pump to ensure uniform mixing whenever the boron concentration is decreased.
2. The design arrangement of the reactor coolant system eliminates dead-ended sections and other areas of low coolant flow in which nonhomogeneities in coolant temperature or boron concentration could develop.
3. The reactor coolant system is designed to operate within the operating parameters, particularly during coolant temperature changes.

The design pressure for the reactor coolant system is 2485 psig, except for the pressurizer relief line from the safety valve to the pressurizer relief tank, which is 600 psig, and the pressurizer relief tank, which is 100 psig. For components with design pressures of 2485 psig, the normal operating pressure is 2235 psig. The design temperature for the reactor coolant system is 650°F, except for the pressurizer and the surge line, which are designed for 680°F, and the pressurizer relief line from the safety valve to the pressurizer relief tank, which is designed for 400°F.

The following five ASME operating conditions are considered in the design of the reactor coolant system:

1. Normal Conditions - Any condition in the course of start-up, operation in the design power range, hot standby, and system shutdown, other than upset, emergency, faulted, or testing conditions.
2. Upset Conditions - Any deviations from normal conditions expected to occur often enough that design should include the ability to withstand the conditions without operational impairment. Upset conditions include those transients that result from any single operator error, control malfunction, transients caused by a fault in a system component requiring its isolation from the system, and transients due to loss of load or power. Upset conditions include any abnormal accidents not resulting in a forced outage and also forced outages for which the corrective action does not include any repair or mechanical damage. The estimated duration of an upset condition is included in the design specifications.
3. Emergency Conditions - Those deviations from normal conditions that require shutdown for the correction of the conditions or repair of system damage. The conditions have a low probability of occurrence but are included to provide assurance that no gross loss of

structural integrity will result as a concomitant effect of any damage developed in the system. The total number of postulated occurrences for such events shall not cause more than 25 stress cycles having an S_a value greater than that for 10^6 cycles from the applicable fatigue design curves of the ASME Code, Section III, 1968 Edition.

4. Faulted Conditions - Those combinations of conditions associated with extremely low probability; postulated events whose consequences are such that the integrity and operability of the nuclear energy system may be impaired to the extent that considerations of public health and safety are involved. Such conditions require compliance with safety criteria specified by jurisdictional authorities.

5. Testing Conditions - Testing conditions are those tests in addition to the hydrostatic or pneumatic tests permitted by the ASME Code, Section III, including leak tests or subsequent hydrostatic tests.

To provide the necessary high degree of integrity for the equipment in the reactor coolant system, the transient conditions selected for equipment fatigue evaluation are based on a conservative estimate of the magnitude and frequency of the temperature and pressure transients resulting from various operating conditions in the plant. To a large extent, the specific transient operating conditions to be considered for equipment fatigue analyses are based on engineering judgment and experience. The selected transients are representative of operating conditions that prudently should be considered to occur during plant operation and are sufficiently severe or frequent to be of possible significance to component cyclic behavior. The selected transients may be regarded as a conservative representation of transients that, used as a basis for component fatigue evaluation, provide confidence that the component is appropriate for its application over the design life of the plant.

The following five transients are considered normal conditions:

1. Heatup and Cooldown - For design evaluation, the heatup and cooldown cases are represented by continuous heatup or cooldown at a rate of 100°F/hr for all components in the reactor coolant system except the pressurizer, which is limited to a heatup of 100°F/hr and a cooldown of 200°F/hr. These cases correspond to a heatup or cooldown rate under abnormal or emergency conditions. The heatup occurs from ambient to the no-load temperature and pressure condition; the cooldown represents the reverse situation. In actual practice, the rate of temperature change of 100°F/hr will seldom occur because of other limitations such as the following:

   a. Criteria for the prevention of nonductile failure that establish maximum permissible temperature rates of change, as a function of plant pressure and temperature.

   b. Slower initial heatup rates when using pumping energy only.

c. Interruptions in the heatup and cooldown cycles attributable to such factors as drawing a pressurizer steam bubble, rod withdrawal, sampling, water chemistry, and gas adjustments.

The heatup and cooldown rates imposed by plant-operating procedure are limited to 50°F/hr for normal operation. Ideally, heatup and cooldown would occur only before and after refueling. In practice, additional unscheduled plant cooldowns may be necessary for plant maintenance.

2. Unit Loading and Unloading - The unit loading and unloading cases are conservatively represented by a continuous and uniform ramp power change of 5%/min between 15% load and full load. This load swing is the maximum possible consistent with operation with automatic reactor control. The reactor coolant temperature varies with load as prescribed by the temperature control system.

3. Step Increase and Decrease of 10% - The ±10% step change in load demand is a control transient that is assumed to be a change in turbine control valve opening that might be occasioned by disturbances in the electrical network into which the plant output is tied. The reactor control system is designed to restore plant equilibrium without reactor trip or steam dump following a ±10% step change in turbine load demand initiated from nuclear plant equilibrium conditions in the range between 15% and 100% full load, the power range for automatic reactor control. In effect, during load-change conditions, the reactor control system attempts to match turbine and reactor outputs such that peak reactor coolant temperature is minimized and reactor coolant temperature is restored to its programmed setpoint at a sufficiently slow rate to prevent excessive pressurizer pressure decrease.

   Following a step-load decrease in turbine load, the secondary-side steam pressure and temperature initially increase since the decrease in nuclear power lags behind the step decrease in turbine load. During the same increment of time, the reactor coolant system average temperature and pressurizer pressure also initially increase. Because of the power mismatch between the turbine and reactor and the increase in reactor coolant temperature, the control system automatically inserts the control rods to reduce core power. With the load decrease, the reactor coolant temperature is ultimately reduced from its peak value to a value below its initial equilibrium value at the inception of the transient. The reactor coolant average temperature setpoint change is made as a function of turbine-generator load as determined by first-stage turbine pressure measurement. The pressurizer pressure also decreases from its peak pressure value and follows the reactor coolant decreasing temperature trend. At some point during the decreasing pressure transient, the saturated water in the pressurizer begins to flash, reducing the rate of pressure decrease. Subsequently, the pressurizer heaters come on to restore the plant pressure to its normal value.

Following a step-load increase in turbine load, the reverse situation occurs, that is, the secondary-side steam pressure and temperature initially decrease and the reactor coolant average temperature and pressure initially decrease. The control system automatically withdraws the control rods to increase core power. The decreasing pressure transient is reversed by the actuation of the pressurizer heaters and eventually the system pressure is restored to its normal value. The reactor coolant average temperature is raised to a value above its initial equilibrium value at the beginning of the transient.

4. Large-Step Decrease in Load - This transient applies to a step decrease in turbine load from full power of such magnitude that the resultant rapid increase in reactor coolant average temperature and secondary-side steam pressure and temperature automatically initiates a secondary-side steam dump system that prevents a reactor shutdown or lifting of steam generator safety valves. If a steam dump system were not provided to cope with this transient, there would be such a large mismatch between what the turbine is demanding and what the reactor is furnishing that a reactor trip and lifting of steam generator safety valves would occur.

   North Anna has been designed for a 50% step change (40% steam dump capability). However, the transient for a 95% step-load decrease is considered and represents a more severe condition than the lower percentage.

5. Steady-State Fluctuations - The reactor coolant average temperature, for purposes of design, is assumed to increase or decrease a maximum of 6°F in 1 minutes. The temperature changes are assumed to be within ±3°F of the programmed value of T_{avg}. The corresponding reactor coolant average pressure is assumed to vary accordingly.

The following five transients are considered upset conditions:

1. Loss of Load Without Immediate Turbine or Reactor Trip - This transient applies to a step decrease in turbine load from full power occasioned by the loss of turbine load without immediately initiating a reactor trip; it represents the most severe transient on the reactor coolant system. The reactor and turbine eventually trip as a consequence of a high-pressurizer-level trip initiated by the reactor trip system. Since redundant means of tripping the reactor are provided as a part of the reactor protection system, transients of this nature are not expected, but are included to ensure a conservative design.

2. Loss of Power - This transient applies to a blackout situation involving the loss of outside electrical power to the station with a reactor and turbine trip. Under these circumstances, the reactor coolant pumps are de-energized, and following the coastdown of the reactor coolant pumps, natural circulation builds up in the system to some equilibrium value. This condition permits the removal of core residual heat through the steam generators, which at this time are receiving feedwater from the auxiliary feed system operating from diesel-generator power.

Steam is removed for reactor cooldown through atmospheric relief valves provided for this purpose.

3. Loss of Flow - This transient applies to a partial loss-of-flow accident from full power in which a reactor coolant pump is tripped out of service as a result of loss of power to the pump. The consequences of such an accident are a reactor and turbine trip on low reactor coolant flow, followed by automatic opening of the steam dump system and flow reversal in the affected loop. The flow reversal results in reactor coolant, at cold-leg temperature, being passed through the steam generator and cooled still further. This cooler water then passes through the hot-leg piping and enters the reactor vessel outlet nozzles. The net result of the flow reversal is a sizable reduction in the hot-leg coolant temperature of the affected loop.

4. Reactor Trip from Full Power - A reactor trip from full power may occur for a variety of causes resulting in temperature and pressure transients in the reactor coolant system and in the secondary side of the steam generator. This is the result of continued heat transfer from the reactor coolant in the steam generator. The transient continues until the reactor coolant and steam generator secondary-side temperatures are in equilibrium at zero-power conditions. A continued supply of feedwater and controlled dumping of secondary steam remove the core residual heat and prevent the steam generator safety valves from lifting. The reactor coolant temperature and pressure undergo a rapid decrease from full-power values as the reactor trip system causes the control rods to move into the core.

5. Inadvertent Auxiliary Spray - The inadvertent pressurizer auxiliary spray transient will occur if the auxiliary spray valve is opened inadvertently during normal operation of the plant. This will introduce cold water into the pressurizer with a very sharp pressure decrease as a result.

   The temperature of the auxiliary spray water is dependent on the performance of the regenerative heat exchanger. The most conservative case is when the letdown steam is shut off and the charging fluid enters the pressurizer unheated. Therefore, for design purposes, the temperature of the spray water is assumed to be 100°F; the spray flow rate is assumed to be 200 gpm. It is furthermore assumed that the auxiliary spray will, if actuated, continue for 5 minutes until it is shut off.

   The pressure decreases rapidly to the low-pressure reactor trip point. At this pressure, the pressurizer low-pressure reactor trip is assumed to be actuated; this accentuates the pressure decrease until the pressure is finally limited to the hot-leg saturation pressure. At 5 minutes the spray is stopped and all the pressurizer heaters return the pressure to 2250 psia. This transient is more severe on a two-loop plant than on a three- or four-loop plant; for example, the pressure decrease is bigger and more rapid. Therefore, the transient for a two-loop plant is used as design basis for all plants.

   It is assumed for design purposes that no temperature changes in the reactor coolant system will occur as a result of initiation of auxiliary spray except in the pressurizer.

No transient is classified as an emergency condition.

The following transients are considered faulted conditions:

1. Reactor Coolant System Boundary Pipe Break - This accident involves the postulated rupture of a pipe in the reactor coolant system boundary. It is conservatively assumed that the system pressure is reduced rapidly and the emergency core cooling system (ECCS) is initiated to introduce water into the reactor coolant system. The safety injection signal also will initiate a turbine and reactor trip.

   The criteria for locating design-basis reactor coolant branchline pipe ruptures used in the design of the supports and restraints of the reactor coolant system to ensure continued integrity of vital components and engineered safety systems are given in Section 3.6, and Appendix 3A.

   Analyses reported in Reference 1 and service experiences show that the criteria given in Section 3.6 offer a practical equivalent to ensure the same degree of protection to public health and safety as postulating both longitudinal and circumferential breaks at any location in the reactor coolant branchlines. Westinghouse nuclear steam supply system (NSSS) piping and support components are designed to these criteria. Westinghouse performed the stress analysis for the reactor coolant piping and stress analysis for the pressurizer surge line. Stone & Webster performed the rupture analysis for the surge line and other controlling reactor coolant loop branchlines. Protection criteria against dynamic effects associated with pipe breaks is covered in Section 3.6.

2. Steam-Line Break - For component evaluation, the following conservative conditions are considered:

   a. The reactor is initially in hot, zero-power subcritical condition assuming all rods in, except the most reactive rod, which is assumed to be stuck in its fully withdrawn position.

   b. A steam-line break occurs inside the containment resulting in a reactor and turbine trip.

   c. Subsequent to the break the reactor coolant temperature cools down to 212°F.

   d. The ECCS pumps restore the reactor coolant pressure.

   The above conditions result in the most severe temperature and pressure variations that the component will encounter during a steam-line break accident.

   The dynamic reaction forces associated with circumferential steam-line breaks are considered in the design of supports, restraints, and piping to ensure continued integrity of vital components and engineered safety features.

3. Design-Basis Earthquake - The mechanical stress resulting from the design-basis earthquake is considered on a component basis.

   The design conditions are given in the equipment specifications, which are written in accordance with the ASME Code.

   The design transients and the number of cycles of each that is normally used for fatigue evaluations are shown in Table 5.2-4. In accordance with the ASME Code, faulted conditions are not included in fatigue evaluations.

   The following tests are carried out before plant start-up:

   a. Turbine Roll Test - This transient is imposed on the plant during the hot functional test period for turbine cycle checkout. Reactor coolant pump power is used to heat the reactor coolant to operating temperature, and the steam generated is used to perform a turbine roll test. The plant cooldown during this test may exceed the 100°F/hr maximum rate; however, this test is not detrimental to any plant components.

   b. Hydrostatic Test Conditions - The pressure tests are outlined below:

      1) Primary-Side Hydrostatic Test Before Initial Start-up - The pressure tests covered by this section include both shop and field hydrostatic tests that occur as a result of component or system testing. This hydro test is performed before initial fuel loading at a water temperature that is compatible with reactor vessel fracture prevention criteria requirements and a maximum test pressure of 3107 psig or 1.25 times the design pressure. In this test, the primary side of the steam generator is pressurized to 3107 psig coincident with no pressurization of the secondary side.

      2) Secondary-Side Hydrostatic Test Before Initial Start-up - The secondary side of the steam generator is pressurized to 1.25 times the design pressure of the secondary side coincident with the primary side at 0 psig.

      3) Primary-Side Leak Test - Subsequent to each time the primary system has been opened, a leak test is performed. During this test, the primary system pressure is for design analysis purposes, assumed to be raised to 2500 psia, with the system temperature above design transition temperature, while the system is checked for leaks.

         In actual practice, the primary system will be pressurized to less than 2500 psia to prevent the pressurizer safety valves from lifting during the leak test.

         During this leak test, the secondary side of the steam generator will be pressurized so that the pressure differential across the tubesheet does not exceed 1600 psi. This is accomplished by closing off the steam lines.

Since the tests outlined under items a and b, except b(3), occur before plant start-up, the number of cycles is independent of plant life.

5.2.1.2 **Design Evaluation**

The reactor coolant system provides for heat transfer from the reactor to the steam generators under conditions of forced-circulation flow and natural-circulation flow. The heat-transfer capabilities of the reactor coolant system are analyzed in Chapter 15 for various transients.

The heat-transfer capability of the steam generators is sufficient to transfer, to the steam and power conversion system, the heat generated during normal operation, and during the initial phase of plant cooldown under natural-circulation conditions.

The second phase of plant cooldown, cold shutdown, and refueling use the heat exchangers of the residual heat removal system. Their capability is discussed in Section 5.5.4.

The pumps of the reactor coolant system ensure heat transfer by forced-circulation flow. Design flow rates are discussed in conjunction with the reactor coolant pump description in Section 5.5.1.

Initial reactor coolant system tests were performed to determine the total delivery capability of the reactor coolant pumps. Thus, it was confirmed before initial criticality that adequate circulation is provided by the reactor coolant system.

To ensure a heat sink for the reactor under conditions of natural-circulation flow, the steam generators are at a higher elevation than the reactor. In the design of the steam generators, consideration was given to provide adequate tube area to ensure that the residual heat removal rate is achieved with natural-circulation flow.

To ensure degassification and decay heat removal under certain accident conditions without relying on main coolant pump operation, the reactor coolant vent system provides remote venting capability of the reactor vessel head and pressurizer steam space. Whenever the boron concentration of the reactor coolant system is reduced, plant operation will be such that good mixing is provided to ensure that the boron concentration is maintained uniformly throughout the reactor coolant system.

Although mixing in the pressurizer will not be achieved to the same degree, the fraction of the total reactor coolant system volume that is in the pressurizer is small. Thus, the pressurizer liquid volume is of no concern with respect to its effect on boron concentration.

Also, the design of the reactor coolant system is such that the distribution of flow around the system is not subject to the degree of variation that would be required to produce nonhomogeneities in coolant temperature or boron concentration as a result of areas of low

coolant flow rate. An exception to this is the pressurizer, but for the reasons discussed above, it is of no concern. Operation to achieve an orderly shutdown with one reactor coolant pump inoperable is permissible under certain conditions as defined in the Technical Specifications. In this case there would be backflow in the associated loop, even though the pump itself is prevented from rotating backwards by its antirotation device. The backflow through the loop would cause departure from the normal temperatures distribution around the loop, but would maintain the boron concentration in the loop the same as that in the remainder of the reactor coolant system.

The range of coolant temperature variation during normal operation is limited, and the associated reactivity change is well within the capability of the rod control group movement.

For design evaluation, the heatup and cooldown transients are analyzed by using a rate of temperature change equal to 100°F/hr, which corresponds to abnormal or emergency heatup and cooldown conditions. Over certain temperature ranges, fracture prevention criteria will impose a lower limit to heatup and cooldown rates.

Before plant cooldown is initiated, the boron concentration in the reactor coolant system is increased to the required concentration for the final reactor coolant system temperature, and the concentration is verified by sampling. Thus, during reactor cooldown, no changes are imposed on the boron concentration.

It is therefore concluded that the temperature changes imposed on the reactor coolant system during its normal modes of operation do not cause any abnormal or unacceptable reactivity changes.

The design cycles as discussed in the preceding section are conservatively estimated for equipment design purposes and are not intended to be an accurate representation of actual transients or for all cases to reflect operating experience.

Certain design transients, with associated pressure and temperature curves, have been chosen and assigned an estimated number of design cycles for the purpose of equipment design. These curves represent an envelope of pressure and temperature transients on the reactor coolant system boundary with margin in the number of design cycles chosen based on operating experience.

To illustrate this approach, the reactor trip transient can be mentioned. Four hundred design cycles are considered in this transient. One cycle of this transient would represent any operational occurrence that would result in a reactor trip. Thus, the reactor trip transient represents an envelope design approach to various operational occurrences. This approach provides a basis for fatigue evaluation to ensure the necessary high degree of integrity for the reactor coolant system components.

System hydraulic and thermal design parameters are used as the basis for the analysis of equipment, coolant piping, and equipment support structures for normal and upset loading conditions. The analysis is performed using a static model to predict deformation and stresses in the system. Results of the analysis give six generalized force components, three bending moments, and three forces. These moments and forces are resolved into stresses in the pipe in accordance with the applicable codes. Stresses in the structural supports are determined by the material and section properties assuming linear elastic small-deformation theory.

In addition to the loads imposed on the system under normal and upset conditions, the design of mechanical equipment and equipment supports requires that abnormal loading conditions such as seismic events and pipe rupture also be considered.

The analysis of the reactor coolant loops and support systems for seismic loads is based on a three-dimensional, multimass elastic dynamic model. The floor spectral accelerations supplied by Vepco for North Anna are used as input forcing functions to the detailed dynamic model that includes the effects of the supports and the supported equipment. The loads developed from the dynamic model are incorporated into a detailed loop and support models to determine the support member stresses.

The loop dynamic analysis uses the displacement method, lumped parameter, and stiffness matrix formulations, and assumes that all components behave in a linearly elastic manner. The dynamic analysis of the supports is discussed in Section 5.5.9. Seismic analyses are covered in detail in Section 3.7.

The analysis of the reactor coolant loops and support systems for blowdown loads resulting from postulated breaks on RCL branchlines is based on the time-history response of simultaneously applied blowdown forcing functions on a loop dynamic model.

Since it is highly improbable that maximum load due to postulated pipe ruptures and seismic condition will occur simultaneously, the seismic and pipe rupture loads are combined by the Square Root of Sum of the Squares (SRSS) method. The stresses in the components resulting from normal load directly added to the SRSS of pipe ruptures and seismic loads are determined to verify that the reactor coolant loops and support systems will not loose their function.

For fatigue evaluations, in accordance with the ASME Code, 1968 Edition, maximum stress intensity ranges are derived from combining the normal and upset condition transients given in Section 5.2.1.1. The stress ranges and number of occurrences are then used in conjunction with the fatigue curves in the ASME Code to get the associated cumulative usage factors.

The criterion presented in the ASME Code is used for the fatigue failure analysis. The cumulative usage factor is less than 1.0 and hence the fatigue design is adequate.

The reactor vessel vendor's stress report is reviewed by Westinghouse. The stress report includes a summary of the stress analysis for regions of discontinuity analyzed in the vessel, a discussion of the results including a comparison with the corresponding code limits, a statement of the assumptions used in the analyses, descriptions of the methods of analysis and computer programs used, a presentation of the actual calculations used, a listing of the input and output of the computer programs used, and a tabulation of the references cited in the report. The content of the stress report is in accordance with the requirements of the ASME Code.

The Westinghouse analysis of the steam generator tube-tubesheet complex is included as part of the stress report requirement for ASME Code Class A nuclear pressure vessels. The evaluation is based on the stress and fatigue limitations outlined in ASME Code, Section III.

The stress analysis techniques used include all factors considered appropriate to conservative determination of the stress levels used in evaluation of the tube-tubesheet complex. The analysis of the tube-tubesheet complex includes the effect of all appurtenances attached to the perforated region of the tubesheet that are considered appropriate for conservative analysis of the stresses for evaluation on the basis of the ASME Code, Section III, stress limitations. The evaluation involves the heat conduction and stress analysis of the tubesheet, channel head, and secondary-shell structure for particular steady design conditions for which code stress limitations are to be satisfied and for discrete points during transient operation for which the temperature/pressure conditions must be known to evaluate stress maximum and minimum for fatigue life. In addition, analyses are performed to determine tubesheet capability to sustain faulted conditions. The analytic techniques used are computerized.

The major concern in fatigue evaluation of the tube weld is the fatigue strength reduction factor to be assigned to the weld root notch. For this reason, Westinghouse has conducted low-cycle fatigue tests of tube material samples to determine the fatigue strength reduction factor and applied them to the analytic interaction analysis results in accordance with the accepted techniques in the ASME Code for experimental stress analysis. A fatigue strength reduction factor of 4.0 is assigned to the weld root notch in the fatigue evaluation of the tube weld.

The steam generator tube-tubesheet complex integrity is verified by analysis for most adverse conditions resulting from a rupture of either primary or secondary piping.

It has been established that for such accident conditions, where a primary-to-secondary-side differential pressure exists, the primary membrane stresses in the tubesheet ligaments, averaged across the ligament and through the tubesheet thickness, satisfy the conditions given in Tables 5.2-8 and 5.2-11 for this faulted event. Also, for such accident conditions, the primary membrane stress plus primary bending stress in the tubesheet ligaments, averaged across the ligament width at the tubesheet surface location giving maximum stress, must not exceed the faulted condition criteria. In the case of a primary pressure-loss accident, the secondary-primary pressure differential is somewhat higher than the primary-secondary design pressure differential.

However, rigorous analysis shows that no stresses in excess of those covered by the ASME Code for faulted conditions are experienced by the tubesheet for this accident.

Tables 5.2-8 and 5.2-11 summarize the tubesheet stress results for a pressure differential of 2485 psig. Tabulations of other significant results of the tubesheet complex are in Tables 5.2-5 through 5.2-12 and Figure 5.2-1.

The tubes in the North Anna replacement steam generators have been designed to the requirements of the ASME Code, assuming 1600 psi as the design pressure differential. None of the normal and upset conditions impose stresses beyond that normally expected and considered as normal operation by the Code.

A tube analysis for the external pressures showed the collapse pressure of 2389 psi in the straight leg of the tube and 1944 psi in the U-bend region of the tube considering the thinnest tube and including the wear/corrosion allowances for a faulted condition considering the minimum strength properties required by the ASME Code, Section III. This provides a calculated minimum factor of safety of 1.88 against collapse.

Consideration has been given to the superimposed effects of secondary-side pressure loss and the design-basis earthquake loading. For the case of the tubesheet, the design-basis earthquake loading will contribute an equivalent static pressure loading over the tubesheet of less than 10 psi (for vertical shock). Such an increase is small when compared to the pressure differentials (up to 2485 psig) for which the tubesheet is designed. The fluid dynamic forces under secondary steam break accident conditions indicate, in the most severe case, that the tubes are adequate to constrain the motion of the baffle plates with some plastic deformation, while boundary integrity is maintained.

A complete tube-tubesheet complex analysis verified structural integrity for a primary pressure-loss accident plus the design-basis earthquake.

Although the ASME Code provides for rules and techniques in analysis of perforated plates, it should be noted that the stress intensity levels for perforated plates are given for triangular perforation arrays. Westinghouse tubesheets contain square hole arrays.

Nevertheless, much data have been published that are in excellent agreement with experimental results. The square penetration pattern stress concentration factors and elastic constants that were used in the analysis of the tubesheet were obtained from *A Study of Perforated Plates with Square Penetration Patterns* (Reference 2). This represented the best available data, which, as the paper demonstrates, has been experimentally justified. The applicable nonmandatory guidelines of Appendix A-8000 were directly used in the analysis in the calculation of the equivalent plate stresses, the use of the stress concentration factors around the pertinent holes, the calculate of the various alternating stresses, and the use of the ASME Code, Section III, fatigue curves.

In the limit stress analysis performed for the tube-tubesheet complex, the deformations and displacements induced at the location of the steam generator supports are negligible. Channel head deflections due to the limit analysis of the tubesheet occur only in the region of the tubesheet and the tubesheet to channel head junction and are not appreciable at the location of the supports. The support feet are approximately 3 feet away from the tubesheet. Since support deflections due to the tubesheet analysis are negligible, the system analysis will not be affected.

The vessels of the reactor coolant pressure boundary are designated ASME Code, Section III, 1968, including addenda up to Winter 1968, Class A. Piping, pumps, and valves are designated to USAS B31.7, 1969, except as noted in Section 5.2. Additionally, reanalysis of the pressurizer surge line to account for the effect of thermal stratification and striping was performed in accordance with the requirements of ASME Boiler and Pressure Vessel Code, Section III, 1986 and addenda through 1987, incorporating high cycle fatigue as required by NRC Bulletin 88-11.

Loading combination and allowable stresses for ASME Code, Section III, 1968, Winter 1968, Class A components and piping are given in Tables 5.2-13 through 5.2-16. Design criteria for supports are given in Section 5.5.9.

When the components and systems for the North Anna units were being designed, only general design requirements existed for faulted conditions. There were no specific stress limits or associated methods of analysis established for faulted conditions. To provide a conservative basis for the analysis of Class 1 components, the collapse curves given in the PSAR were developed. The criteria represented by the collapse curves have evolved into the criteria of Table 5.2-16. The methods and criteria in Table 5.2-16 should thus be reviewed with respect to the criterion agreed to in the PSAR, rather than with the more recently derived methods and limits established in the nonmandatory Appendix F of the ASME Code, Section III. These methods of analysis in conjunction with the faulted condition stress limits ensure that the general design requirements of the NRC for faulted conditions will be met and the plant can thus be safely shut down under accident conditions.

For the reactor coolant loop and components, the elastic system analysis option of Table 5.2-16 was used. Elastic component analyses were used on all components except those discussed below.

Inelastic component analysis was used for the reactor coolant pump support feet. The pump casing with the pump support feet is shown in Figure 5.2-2. The pump foot was analyzed for a set of umbrella loads that are greater than the loads expected in any plant. The umbrella loads are calculated for the faulted condition and each of the maxima of the six load components, F_x, F_y, F_z, M_x, M_y, M_z, are assumed to occur simultaneously. For example, the maximum F_x is chosen by surveying many past plants, and this is applied simultaneously with the maximum F_y, F_z, M_x, M_y, M_z, all determined similarly. The actual plant loads are calculated and compared to the umbrella loads. Conformance indicates adequacy of the component for the specific plant application. If

conformance is not demonstrated, an individual plant analysis would be performed. Table 5.2-17 indicates the relationship between the North Anna specific plant loads for four different faulted conditions (from four break locations that gave the highest loads) and the umbrella loads for which the pump foot was designed. The actual plant loads are, in themselves, also conservative since the maximum for each of the six load components is determined and assumed to act concurrently with the others. For the LOCA condition, the dynamic time-history analyses show that the maximum values of the six load components do not act concurrently. The seismic event, although evaluated by response spectra analysis, is also dynamic and the load component maxima at the foot clearly will not coincide. Note from Table 5.2-17 that the umbrella loads are greater than these actual plant loads. Note also that the reactor coolant pump support design is such that there are no moments applied to the feet, while the feet are in fact designed to withstand the umbrella moments given in Table 5.2-17. From the preceding discussion, the conservatisms in the actual plant loads and the adequacy of the umbrella loads are therefore demonstrated.

The entire casing foot was analyzed by means of a three-dimensional stress analysis. The foot model used symmetry about the bolt hole radial centerline (Figure 5.2-3). The completed model contains 1584 node points and 1518 three-dimensional solid elements with 4088 active degrees of freedom in the model. The three-dimensional finite elements are a mixture of rectangular prisms, triangular prisms, and tetrahedrons. The vertical side and horizontal plate sections have a minimum of four elements through the thickness. The model therefore yields bending stresses as well as direct stresses through the thickness. The higher stress regions have a finer model mesh consisting of smaller tetrahedron and triangular prism elements.

The ANSYS computer code (Reference 3) plastic analysis options were used. The plasticity program is based on incremental strain equations with the Prandtl-Reuss flow rule (Reference 4). The virgin stress-strain option was used to input the true stress-true strain material curve. To yield the required accuracy, loading increments were computed to keep the size of the plastic strain increments near the size of the material yield strain. The smaller load steps keep the solution process from diverging from the input stress-strain curve.

The resulting faulted condition plastic analysis stress intensity was compared with the faulted condition criteria of 0.7 S_{ut} = 59,950 psi for type 304 stainless steel at 600°F. This is the limit for the primary membrane plus bending stress intensities as given in Table 5.2-16. Since the foot is similar to a beam-type structure, the average stress across the section is very low. The primary bending stresses therefore control. The true ultimate stress, S_{ut}, is determined from the engineering ultimate stress (the engineering stress at the point of maximum load) by assuming constancy of volume. Using this assumption, the true ultimate stress (S_{ut}) is given by:

$$S_{ut} = S_u(1 + e)$$

where e is the engineering strain corresponding to the point of maximum load.

The stresses in the pump foot to casing attachment zone and weld filled region were not controlling. The maximum stress in the foot occurred in the horizontal plate member near the vertical to horizontal plate intersection and in line with the bolt. Since the faulted allowables are based on primary stresses and not peak stresses, the stress components in the high-stress region were linearized through the plate thickness. The resulting maximum stress intensity of the section, found from these linearized maximum principal stresses, was 59,614 psi. This is less than the inelastic allowable.

The maximum located outer fiber strain corresponding to this stress was approximately 12% to 14%. However, the incremental strains for each load step were kept to approximately 0.2%. The maximum deflection calculated by the statically applied loads was approximately 1 in. at the radial symmetry line passing through the hole. If geometry modifications had been made for this deflection, the load induced in the high-stress regions would have been lowered since the moment arm for the beamline structure would decrease. The present analysis is therefore considered conservative from the analysis as well as the loads standpoint.

The stress and deflection analysis is based on a static application of loads that are physically short-duration, dynamically applied loads. For this reason, the actual deflections due to the short-duration peak loads could be expected to be much lower than those calculated by the static analysis. The actual plant loads are also, in general, considerably lower than the design loads; this will further reduce the true magnitude of the deflections. Additional discussion of component supports may be found in Section 5.5.9.

Valves in sample lines are not considered to be part of the reactor coolant system boundary, that is, not ANS Safety Class 1. This is because the nozzles where these lines connect to the reactor coolant system are orificed to a 3/8-inch hole. This hole restricts the flow such that loss through a severance of one of these lines can be made up by normal charging. Pumps and valves are classified as either operating or inactive components for faulted conditions. Operating components are those whose operability is relied on to perform safety function as well as reactor shutdown function during the transients or events considered on the respective operating condition categories. Inactive components are those whose operability (e.g., valve opening or closure, or pump operation or trip) is not relied on to perform the system function during the transients or events considered in the respective operating condition category. The reactor coolant pumps are the only pumps in the reactor coolant system boundary that are classified as inactive for pipe rupture. Table 5.2-18 lists the operating and inactive valves in each line connected to the reactor coolant system up to and including the system boundary. Table 5.2-19 describes the design and operating conditions for active valves in the reactor coolant pressure boundary. Reactor coolant pump overspeed evaluations are covered in Section 5.5.1.3.

Every valve and pump is hydrostatically tested to ASME Code requirements to ensure the integrity of the pressure boundary parts.

5.2.2 Overpressurization Protection

5.2.2.1 Normal Operation

The pressurizer is designed to accommodate pressure increases and decreases caused by load transients. The spray system condenses steam to prevent the pressurizer pressure from reaching the setpoint of the power-operated relief valves (PORVs) during a step reduction in power level of 10% of load.

The spray nozzles are located in the top of the pressurizer. Spray is initiated when the pressure exceeds a given setpoint. The spray rate increases proportionally with increasing pressure rate and pressure error until it reaches a maximum value.

The pressurizer is equipped with power-operated relief valves that limit system pressure for a large power mismatch and thus prevent actuation of the fixed high-pressure reactor trip. The relief valves are operated automatically or by remote manual control. The operation of these valves also limits the undesirable opening of the spring-loaded safety valves. Remotely operated stop valves are provided to isolate the power-operated relief valves if excessive leakage occurs. The relief valves are designed to limit the pressurizer pressure to a value below the high-pressure trip setpoint for all design transients up to and including the design percentage step-load decrease with steam dump but without reactor trip.

The output signals from the pressurizer pressure protection channels are different from those used for pressure control. The pressure control output signals are used to control pressurizer spray and heaters and power-operated relief valves. Pressurizer pressure is sensed by fast-response pressure transmitters with a time response of better than 0.2 second.

In the event of a complete loss of heat sink, that is, no steam flow to the turbine, protection of the reactor coolant system against overpressure is afforded by pressurizer and steam generator safety valves along with any of the following reactor trip functions:

1. Reactor trip on turbine trip.
2. High pressurizer pressure reactor trip.
3. High pressurizer water level reactor trip.
4. Overtemperature delta T reactor trip.
5. Steam flow/feedwater flow mismatch coincident with low steam generator water level reactor trip.
6. Low-low steam generator water-level reactor trip.

Continued integrity of the reactor coolant system during the maximum transient pressure is ensured by design within the applicable codes as discussed in Reference 5. The Code safety limit is 110% of the 2485 psig design limit.

A detailed functional description of the process equipment associated with the high-pressure trip is provided in Reference 6.

The upper limit of overpressure protection is based on the positive surge of the reactor coolant produced as a result of turbine trip under full load, assuming the core continues to produce full power. The self-actuated safety valves are sized on the basis of steam flow from the pressurizer to accommodate this surge at a setpoint of 2500 psia, an average positive tolerance of +2% (maximum of +3% per valve), a medium shift of 1%, and a total accumulation of 0.1%. Note that no credit is taken for the relief capability provided by the power-operated relief valves during this surge.

System components whose design pressure and temperature are less than the reactor coolant system design limits are provided with overpressure protection devices and redundant isolation means. System discharge from overpressure protection devices is collected in the pressurizer relief tank in the reactor coolant system.

5.2.2.2 **Start-up and Shutdown**

The plant-specific low temperature overpressure protection system (LTOPS) PORV setpoint analysis was performed to ensure that bounding RCS overpressure protection during start-up and shutdown is provided by the assumed setpoints. The analysis considered the inadvertent start-up of a high-head safety injection pump and the start-up of a reactor coolant pump with a 50°F ΔT between a steam generator and a reactor coolant system cold leg. These two scenarios are the limiting (design basis) mass and energy addition accidents for the development of LTOPS setpoints. The isothermal limit curve (i.e., 0°F/hr, or steady state) serves as the design limit for establishing LTOPS setpoints. The validity of this approach is demonstrated by consideration of the conditions at which overpressurization events have been demonstrated to occur and by an analysis which demonstrates margins for this design equivalent to those provided by ASME Section XI Appendix G recommendations for anticipated LTOPS events. This design maximizes the operating margin above the minimum RCS pressure for reactor coolant pump (RCP) operation, thereby minimizing the probability of undesired PORV lifts during RCP start-up. Above the LTOPS enabling temperature, actuation of the pressurizer safety valves is adequate to ensure reactor vessel integrity during the design basis LTOPS transients. When the RCS is depressurized, an RCS vent path with an opening size equivalent to that of a single pressurizer PORV (i.e., 2.07 in^2) is sufficient to prevent RCS overpressurization during the design basis LTOPS transients.

Restrictions on allowable operating conditions and equipment operability requirements have been established to ensure that operating conditions are consistent with the assumptions of the accident analyses. Specifically, RCS pressure and temperature must be maintained within the heatup/cooldown rate-dependent pressure/temperature operating limits specified in the Technical Specifications. Administrative upper limits on heatup rate of 50°F/hr and on cooldown rate of

75°F/hr (Reference 26) are observed. Restrictions on the number of charging pumps capable of inadvertent start-up have been imposed to ensure that the assumptions of the mass addition transient analysis are not invalidated. The LTOPS PORV setpoint analysis imposes no restrictions on the number of low-head safety injection (LHSI) pumps capable of inadvertent injection into the RCS, since the discharge pressure of the LHSI pumps is insufficient to cause the results of the mass addition event analysis to become more limiting. A restriction on the allowable temperature difference between the RCS and steam generator secondary side has been imposed to ensure that the assumptions of the heat addition transient are not invalidated.

The analysis supporting the development of LTOPS setpoints remains valid for cumulative core burnups of 50.3 EFPY and 52.3 EFPY for North Anna Units 1 and 2, respectively. Bistables are set to preserve the following LTOPS setpoints for these operating periods, and to ensure staggered actuation of PCV-1455C and PCV-1456 (PCV-2455C and PCV-2456 for Unit 2) (Reference 26):

North Anna Unit 1:

PCV-1455C and PCV-1456

540 psig for Cold Leg T ≤ 280°F (i.e., 280°F Enabling Temp.)
375 psig for Cold Leg T ≤ 180°F

North Anna Unit 2:

PCV-2455C and PCV-2456

540 psig for Cold Leg T ≤ 280°F (i.e., 280°F Enabling Temp.)
375 psig for Cold Leg T ≤ 180°F

Utilizing bistable values lower than those specified increases the margin to the LTOPS design limit heatup and cooldown curve. This provides greater assurance that the design basis LTOPS transients will not result in transient pressures in excess of the design limit. Additional analytical margin is inherent in the assumption that only one PORV is operable, whereas it is highly likely that two PORVs will be available to prevent RCS pressure from exceeding the prescribed limits. The PORVs are described in Section 5.5.8.

The enabling temperature is calculated to conservatively bound the sum of (a) the plant-specific limiting material's RT_{NDT}, (b) margin required by ASME Code Case N-641 (31.9°F), (c) margin for the temperature lag between the quarter-thickness vessel location and the coolant temperature during a 60°F/hr heatup (13°F), and (d) an allowance for temperature measurement instrument uncertainty. Temperature and pressure measurement uncertainties, and the pressure difference between the point of measurement (RCS hot leg) and the point of interest (reactor vessel beltline), were accommodated in the LTOPS setpoint analysis by incorporation of these factors into the design basis (isothermal) pressure/temperature limit curve.

5.2.2.3 **Water-Solid Protection**

The limits for starting a reactor coolant pump while in a water-solid condition are shown in Figure 5.2-4. During solid plant operations, the primary system is filled, the high points are vented, and chemistry is begun to be brought into specifications. The reactor coolant pumps are jogged and the system vented. This is continued until the plant is solid. If the pressurizer chemistry has remained in specification and the loops have not been isolated or drained, a bubble is drawn before starting a reactor coolant pump. To start a reactor coolant pump while the reactor coolant system is in a water-solid condition, the operating procedures require (1) special permission from the operating supervisor and (2) that the associated steam generator secondary-side bulk water temperature is not greater than 50°F above the reactor coolant system temperature. The maximum possible surge rate for this difference in temperature is well within the PORV relief capacity.

The following precautions are also in effect during reactor coolant pump starts. The operating procedures require the residual heat removal system to be in service with the inlet isolation valves open; the low-pressure letdown control valve full open; the normal letdown isolation valves and all three orifice isolation valves open; the reactor coolant system pressure at the lowest allowable pressure for reactor coolant pump operations (300 psig); the charging flow controller at reduced rate; and close operator monitoring of reactor coolant system pressure during venting operations. When reactor coolant system temperature is greater than seal water temperature, permission is required to start a reactor coolant pump.

The pressure protection systems from the pressure sensors through the PORV solenoids meet both the Seismic Class I and IEEE-279 criteria except Section 4.12 of IEEE-279. Wide-range hot- to cold-leg temperatures and volume control tank temperature are available to the operator.

The stated administrative controls and the use of redundant dual setpoint relief valves will not require operator action until 10 minutes after a transient is in progress.

5.2.2.4 **Pressurized Thermal Shock**

The Pressurized Thermal Shock (PTS) Rule was approved by the U.S. Nuclear Regulatory Commission on June 20, 1985, and appeared in the Federal Register on July 23, 1985. The PTS Rule outlines regulations to address the potential for PTS events on reactor vessels in nuclear power plants. PTS events are defined as those transients which may result in a rapid and severe cooldown in the primary system, coincident with a high or increasing primary system pressure. The PTS concern arises if one of these transients acts on the beltline region of a reactor vessel where a reduced fracture resistance exists because of neutron irradiation. Such an event may produce the propagation of flaws postulated to exist near the inner wall surface, thereby potentially affecting the integrity of the vessel.

The code of Federal Regulations (10 CFR 50.61) contains the applicable requirements for calculating the Reference Temperature for Pressurized Thermal Shock (RT_{PTS}) and the associated screening criteria.

Tables 5.2-20 and 5.2-21 provide the results of the 10 CFR 50.61 RT_{PTS} calculations and the NRC screening values for Units 1 and 2, respectively. As these tables demonstrate, all the RT_{PTS} values remain below the NRC screening values for PTS using the projected neutron fluence values through license expiration. This information was provided to the NRC to demonstrate compliance with the PTS rule.

5.2.3 Material Considerations

5.2.3.1 Materials of Construction

The materials of construction of the reactor coolant pressure boundary are specified to minimize corrosion and erosion and ensure compatibility with the environment. To minimize internal erosion, the coolant velocity in the piping is limited to about 50 ft/sec.

The reactor vessel closure heads were replaced with closure heads designed for a French nuclear power plant of similar design. The code for the replacement closure head materials was the French R-CCM Code. Equivalence documents were prepared to identify equivalent ASME Code materials. Table 5.2-22 summarizes the materials of construction of the closure heads and provides ASME equivalent materials where appropriate. RCCM/ASME Equivalency Report—Base Material (Reference 20 for Unit 2 and Reference 22 for Unit 1) provide ASME equivalent base materials used for the pressure boundary (including structural attachments). RCCM/ASME Equivalency Report—Filler Materials (Reference 21 for Unit 2 and Reference 23 for Unit 1) provide ASME equivalent of the filler materials used for pressure boundary and attachments welded on the closure heads. RCCM/ASME Equivalency Reports—Base Materials and Filler Metals provide analysis and justification for deviations between the codes identified in the base materials and filler materials equivalency reports (References 20, 21, 22, & 23).

5.2.3.1.1 General Material Selection

The reactor vessel is constructed of low-alloy steel with 0.125 inch minimum of stainless steel or Inconel weld overlay cladding on all internal surfaces that are in contact with the reactor coolant.

For both units, the reactor vessel beltline shell courses are made of A508 Class 2 forgings. No additional imposed limits on residual elements were applied to these forgings or the beltline girth weld. Residual elements content is obtained from the excess material from the forging and girth weld that make up the beltline region of the reactor vessel. The chemical analyses that included residual elements will be included in the radiation surveillance reports that were prepared after the first reactor vessel irradiation capsule withdrawal, as discussed in Section 5.4.3.6.

The pressurizer is also constructed of low-alloy steel with austenitic stainless steel weld overlay cladding on all surfaces exposed to the reactor coolant.

All parts of the reactor coolant pump in contact with the reactor coolant are austenitic stainless steel except for seals, bearings, and special parts.

The portions of the steam generator in contact with the reactor coolant water are weld overlay clad with nickel-chromium-iron alloy or austenitic stainless steel. The steam generator tubesheet is weld clad with Inconel; and the heat-transfer tubes are made of Inconel. Table 5.2-22 summarizes the materials of construction of these components.

The reactor coolant piping and fittings that make up the loops are austenitic stainless steel. All smaller piping that comprises part of the reactor coolant system boundary, such as the pressurizer surge line, spray and relief lines, loop drains, and connecting lines to other systems are also austenitic stainless steel.

All valves in the reactor coolant system that are in contact with the coolant are constructed primarily of stainless steel. Other materials in contact with the coolant, such as materials for hard surfacing and packing, are special materials.

The welding materials used for joining the ferritic-base materials of the reactor coolant boundary conform to or are equivalent to ASME Material Specifications SFA 5.1, 5.2, 5.5, 5.17, 5.18, and 5.20. They are tested and qualified to the requirements of the ASME Code, Section III. The welding materials used for joining the austenitic stainless steel base materials of the reactor coolant boundary conform to ASME Material Specifications SFA 5.4 and 5.9. They are tested and qualified according to the requirements stipulated in Section 5.2.5.

The welding materials used for joining nickel-chronium-iron alloy in similar base material combination and in dissimilar ferritic or austenitic base material combination of the reactor coolant boundary conform to ASME Material Specifications SFA 5.11 and 5.14. They are tested and qualified to the requirements of ASME Code, Section III, and are used only in procedures that have been qualified to these same rules.

Instrumentation tubes in the lower vessel head and the control rod drive mechanism (CRDM) nozzles in the upper vessel head are welded with Inconel filler metal after final post-weld heat treatment of the vessel.

The CRDM nozzle to adapter welds were performed by the Continuous Drive Friction process. This process is not permitted by the ASME Code, but is approved by the RCC-M Code and has been used extensively for this application in non-U.S. nuclear plants. The Welding Procedure Specification (WPS), the supporting Procedure Qualification Record (PQR) and Welding Operator Performance Qualification (WPQ) were reconciled to ASME Section IX requirements for the CRDM welds. The destructive tests of the supporting PQR were compared

with the required tests and criteria of the ASME Code for an equivalent full penetration weld. These welds are deemed acceptable for this application at North Anna.

The CRDM vent assemblies (part-length motor tube housings), Type 403 stainless steel, are buttered with Type 309 weld metal, given a post-weld heat treatment, then welded to Type 304 stainless steel, using Type 308 filler metal.

The mechanical properties of representative material heats in the final heat treat condition are determined by test at 650°F design temperature per ASTM E-21 or equivalent. In particular, the hot yield strength (0.2% offset) at 650°F equals or exceeds 19,800 psi.

5.2.3.1.2 Piping

Details of the materials of construction and codes used in the manufacture of reactor coolant piping and fittings are given below.

Pipe and fittings are cast, seamless, without longitudinal welds and comply with the requirements of ANSI B31.7 and ASME Code, Section IX.

The minimum wall thicknesses of the pipe and fittings are not less than that calculated using the ANSI B31.7 Class 1 formula of Paragraph I-704.1.2, with an allowable stress value of 17,550 psi allowed for material ASTM A351 Grade CF8A. The minimum bend radius for wrought pipe is 5 nominal pipe diameters.

The pressurizer surge and loop bypass lines conform to ASTM A376 TP 316 with supplementary requirements S2 (transverse tension tests), and S6 (ultrasonic test). The S2 requirements apply to each length of pipe. The S6 requirements apply to 100% of the piping wall volume. The pipe wall thickness for both bypass and pressurizer surge lines is Schedule 160.

Branch nozzles conform to ASTM A182 Grade F316. Thermal sleeves conform to ASME SA376, Type 316 or SA240, Type 304. The sample scoop conforms to ASTM A182 Grade TP 304 or TP 316. The pressurizer spray scoop conforms to ASTM A403 Grade WP 304 or WP 316.

Stainless steel pipe conforms to ANSI B36.19 for sizes 1/2 inch through 12 inch and schedules 40S through 80S. Stainless steel pipe outside of the scope of ANSI B36.19 conforms to ANSI B36.10, exclusive of the reactor coolant loop piping of special sizes 27-1/2-inch, 29-inch and 31-inch inside diameter.

Flanges conform to ANSI B16.5. Socket weld fittings and joints conform to ANSI B16.11.

The following information is HISTORICAL and is not intended or expected to be updated for the life of the plant.

5.2.3.1.3 Inspections and Examination

Radiographic examination was performed throughout 100% of the wall volume of each pipe and fitting in accordance with the procedure of ASTM E-94 and the acceptance standards of ASTM E-186 Severity Level 2, except that the defect categories D and E were not permissible.

A liquid-penetrant examination was performed on both the entire outside and inside surfaces of each finished fitting in accordance with the procedure of ASME III, 1968, Appendix IX. Acceptance standards were in accordance with Westinghouse NES Equipment Specifications and paragraph N323.4 of the Summer 1969 Addenda to ASME Code, Section III.

All unacceptable defects were eliminated in accordance with the requirements of Westinghouse NES Equipment Specifications.

5.2.3.1.4 Solution Heat Treatment Requirements

All of the austenitic stainless steels listed in Tables 5.2-22, 5.2-23, and 5.2-24 were procured from raw material producers in the final heat-treated condition required by the respective ASME Code, Section II, material specification for the particular type or grade of alloy.

5.2.3.1.5 Material Inspection Program

All of the wrought austenitic stainless steel alloy raw materials that require corrosion testing after the final mill heat treatment were tested in accordance with ASTM A393 using material test specimens obtained from specimens selected for mechanical testing. The materials were obtained in the solution annealed condition.

5.2.3.1.6 Unstabilized Austenitic Stainless Steels

The unstabilized austenitic stainless steels used in the reactor coolant system boundary and components are listed in Table 5.2-22.

These materials were used in the as-welded condition as discussed in Section 5.2.3.1.4 above. The control of the water chemistry is stipulated in Section 5.2.3.2. These chemistry controls, coupled with the satisfactory experience with components and internals using unstabilized austenitic stainless steel materials that have been post-weld heat treated above 800°F, show acceptability of these heat treatments for stainless steel in PWR chemistry environments (Reference 7). Actual observations of post-weld heat-treated austenitic stainless steels after actual operation indicate no effects of such treatments. Internals heat treated above 800°F from H. B. Robinson Unit 2, Zorita, Connecticut Yankee, San Onofre, Beznau 1, Yankee Rowe, Selni, R. E. Ginna, and SENA have been examined after service and show acceptable material condition.

In all cases where austenitic stainless steel must be given a stress-relieving treatment above 800°F, a high-temperature stabilizing procedure is used. This is performed in the temperature range of 1600 to 1900°F, with holding times sufficient to achieve chromium diffusion to the grain boundary regions based on ASTM A393.

5.2.3.1.7 Avoidance of Sensitization

The unstabilized austenitic stainless steels used for core structural load-bearing members and component parts of the reactor coolant pressure boundary were processed and fabricated using the most practicable and conservative methods and techniques to avoid partial or local severe sensitization.

After the material was heat treated, the material was not heated above 800°F during subsequent fabrication except as described in Section 5.2.3.1.9 and the paragraphs below.

Methods and material techniques that were used to avoid partial or local severe sensitization are as follows:

1. Nozzle Safe Ends

   a. For the pressurizers, weld deposit with Inconel (Ni-Cr-Fe weld metal F No. 43) was used, followed by the final post-weld heat treatment.

   b. For the Unit 1 and Unit 2 replacement steam generators, a SA-336-CLF 316LN forgings welded to Inconel buildup on the nozzle was used.

   c. For the reactor vessels, a stainless steel weld metal analysis A-7 containing more than 5% ferrite was used.

2. All welding was conducted using those procedures that have been approved by the ASME Code, Sections III and IX.

3. All welding procedures were qualified by nondestructive and destructive testing according to the ASME Code, Sections III and IX.

   When these welding procedure tests were performed on test welds that were made from base metal and weld metal materials that were from the same lot(s) of materials used in the fabrication of components, additional testing was frequently required to determine the metallurgical, chemical, physical, corrosion, etc., characteristics of the weldment. The additional tests that were conducted on a technical case basis were as follows: light and electron microscopy, elevated temperature mechanical properties, chemical check analysis, fatigue tests, intergranular corrosion tests, and static and dynamic corrosion tests within reactor water chemistry limitations.

4. The following welding methods were tested individually and in multiprocess combinations as outlined above using these prudent energy input ranges for the respective method, as calculated by the following formula:

   $$H = \frac{60EI}{S}$$

   where:

   H = Joules/in.

   E = volts

   I = amperes

   S = travel speed in in./min

Welding Process Method	Energy Input Range, kJ/in
Manual shielded tungsten arc	20 to 50
Manual shielded metallic arc	15 to 120
Semiautomatic gas shielded metallic arc	40 to 60
Automatic gas shielded tungsten arc, hot wire	10 to 50
Automatic submerged arc	60 to 140
Automatic electron beam, soft vacuum	10 to 50

5. The interpass temperature of all welding methods was limited to 350°F maximum.

6. All full-penetration welds required inspections in accordance with the codes and rules applicable to each individual component as listed in Table 5.2-3.

5.2.3.1.8 Retesting Unstabilized Austenitic Stainless Steels Exposed to Sensitizing Temperatures

In general, it is not feasible to remove samples from fabricated production components to prepare specimens for retest to determine the susceptibility to intergranular attack. These tests were performed only on test welds when meaningful results would predicate production material performance and are as described in Section 5.2.3.1.7 above. No intergranular tests were planned because of satisfactory service experience (see Section 5.2.3.1.6).

5.2.3.1.9 Compatibility with Reactor Coolant

All of the ferritic low-alloy and carbon steels that are used in principal pressure-retaining applications are provided with a 0.125 inch minimum thickness of corrosion-resistant cladding on all surfaces exposed to reactor coolant. This cladding material has a chemical analysis at least equivalent to the corrosion resistance of Types 304 and 316 austenitic stainless steel alloy or nickel-chromium-iron alloy. The other base materials that are used in principal pressure-retaining applications that are exposed to the reactor coolant are austenitic stainless steel, nickel-chromium-iron alloy, and martensitic stainless steel. Ferritic low-alloy and carbon steel nozzles are safe ended with stainless steel weld metal analysis A-7 or nickel-chromium-iron alloy weld metal F No. 43 using weld buttering techniques followed by a post-weld heat treatment. The latter buttering material requires further safe ending with austenitic stainless steel base material after the completion of the post-weld heat treatment when the nozzle is larger than 4-inch nominal inside diameter and/or the wall thickness is greater than 0.531 inch.

The cladding on ferritic-type base materials receives a post-weld heat treatment.

All of the austenitic stainless steel and nickel-chromium-iron alloy base materials are used in the solution anneal heat treated condition. The heat treatments are as required by the material specifications. During subsequent fabrication, these pressure-retaining materials are not heated above 800°F other than instantaneously and locally by welding operations. The solution annealed surge line material is subsequently formed by hot bending followed by a re-solution annealing heat treatment. Corrosion tests are performed in accordance with ASTM A 393.

5.2.3.1.10 Piping Other Than Surge Line and Reactor Coolant Loop Piping

This stainless steel piping material purchased for North Anna Power Station conforms to ASTM specifications A312, A358, and A376, which require and define solution annealing parameters to prevent sensitization. Conformance to the applicable ASTM specification for each piece of piping material was certified on mill test reports from the suppliers and is included in the permanent documentation package.

In each case where hot bending was performed on stainless steel piping a furnace chart is provided, documenting the subsequent solution anneal. No hot bending of stainless steel piping was permitted at the construction site.

All welding procedures used in the fabrication and erection of austenitic stainless steel piping systems specify controlled voltage, current, weave parameters, and maximum interpass temperature to limit heat input and sensitization.

5.2.3.1.11 Control of Delta Ferrite on Reactor Coolant Loop and Surge Line Piping

The austenitic stainless steel welding material used for joining Class I pipe, pump, and fittings is described in Section 5.2.3.1.9 above. The welding material conformed to ASME weld material analysis A-7, Type 308, for all applications. As an option, Type 308L weld filler metal analysis could be substituted for consumable inserts when this technique was used for weld root closures. Bare weld filler metal materials, including consumable inserts used in inert gas welding processes, conformed to ASME SFA-5.9 and were procured to contain not less than 5% delta ferrite. All weld filler metal materials used in flux shielded welding processes conformed to ASME SFA-5.4 or SFA-5.9 and were procured in a wire-flux combination to provide not less than 5% delta ferrite in the deposit.

All welding materials were tested by the fabricator using the specific process(es) and the maximum welding energy inputs to be used in production welding. These tests were in accordance with the requirements of ASME, Section II, material specification, and in addition included delta ferrite determinations. The delta ferrite determinations were made by calculation using the "Schaeffler or Modified Schaeffler Constitution Diagram for Stainless Steel Weld Metal."

When subsequent in-process delta ferrite determinations were required and since the welding material conformance was proved by the initial material testing described above, any of the recognized methods for the measurement of delta ferrite were acceptable by mutual agreement. In these instances, sound welds (as determined by visual, penetrant, and volumetric examinations) that display more than 1% average delta ferrite content were considered to be unquestionably acceptable. All other sound welds were also considered acceptable, providing there was no evidence of deviation from qualified procedure parameters or use of malpractices. If evidence of the latter prevailed, sampling for chemical and metallurgical analysis was required to determine the integrity and acceptability of the weld(s). The sample size was required to be 10% of the welds, but not less than 1 weld, in the particular component or system. If any of these weld samples were defective, that is, failed to pass bend tests as prescribed by ASME Code, Section IX, or the chemical analysis deviated from the material specification, then all remaining welds were sampled and all defective welds were removed and replaced.

All other applications used Type 308 or Type 316, which normally contain 3% to 15% delta ferrite and 1% to 5% delta ferrite in the deposit analyses, respectively. The successful experience with austenitic stainless steel welds for these applications, supplemented by nondestructive examination, provides assurance for avoiding microfissuring in welds.

The qualification of welding procedures is discussed in Section 5.2.3.1.7 above.

5.2.3.1.12 Control of Delta Ferrite on All Other Piping

Piping systems were fabricated and installed using welding electrodes and consumable inserts purchased to meet the requirements of the applicable sections of ASME Code, Section II. In addition, all electrodes and consumable inserts used in fabrication and erection of austenitic stainless steel systems were purchased with a requirement of 5% to 20% delta ferrite in the undiluted weld metal. The upper limit on delta ferrite need not be applied for welds that do not receive heat treatment subsequent to welding, nor for consumable inserts. The delta ferrite content was checked in two ways: first, by the use of the Schaeffler diagram using actual weld metal chemistry for each heat of material; and second, by Severn gauge measurement of the weld pads prepared in accordance with the applicable part of ASME Code, Section II. All welding procedures specified controlled voltage, current, weave parameters, and maximum interpass temperature to limit heat input.

In addition, 10% of all piping weldments were checked for delta ferrite content. The measurements were performed using a Severn gauge at 90-degree intervals on the weld girth. Any weldment that exhibited an average as-measured delta ferrite content below 2-1/2% was reported to the engineers. Delta ferrite measurements were recorded on weld data sheets for permanent documentation.

All hard-facing procedures on austenitic stainless steel used low (less than 800°F) preheat temperatures to preclude sensitization of the base metal.

5.2.3.2 **Chemistry Control**

The reactor coolant system chemistry specifications are given in Table 5.2-25.

The reactor coolant system water chemistry is selected to minimize corrosion. Periodic analyses of the coolant chemical composition are performed to verify that the reactor coolant quality meets the specifications.

The chemical and volume control system (CVCS) provides a means for adding chemicals to the reactor coolant system to control the pH of the coolant during initial start-up and subsequent operation, scavenge oxygen from the coolant during start-up, and control the oxygen level of the coolant resulting from radiolysis during all power operations. The oxygen content and pH limits

for power operations are shown in Table 5.2-25. A description of the pH control program is found in Section 9.3.4.2.2.1.

During reactor start-up from the cold condition, hydrazine is used as an oxygen-scavenging agent. The hydrazine solution is introduced into the reactor coolant system in the same manner as for the pH control agent.

Dissolved hydrogen is used to control and scavenge oxygen produced as a result of the radiolysis of water in the core region. Sufficient partial pressure of hydrogen is maintained in the volume control tank such that the specified equilibrium concentration of hydrogen is maintained in the reactor coolant. A self-contained pressure control valve maintains a minimum pressure in the vapor space of the volume control tank. This can be adjusted to provide the correct equilibrium hydrogen concentration.

Components with stainless steel sensitized in the manner expected during component fabrication and installation will operate satisfactorily under normal plant chemistry conditions in pressurized water reactor systems, because chlorides, fluorides, and particularly oxygen are controlled to very low levels.

5.2.3.3 **Fracture Prevention**

5.2.3.3.1 Reference Temperature for the Nil-Ductility Transition

The reference temperature for the nil-ductility transition (RT_{NDT}) is a calculated parameter which indicates the temperature at which a material's predicted mode of failure transitions from ductile to brittle. RT_{NDT} values are calculated in the manner prescribed by Regulatory Guide 1.99, Revision 2, *Radiation Embrittlement of Reactor Vessel Materials*. ASME Section XI Appendix G provides guidance for translating the value of RT_{NDT} into a K value, representative of the material's resistance to fracture. Pressure/temperature operating limits are established on the basis of linear-elastic fracture mechanics theory, such that thermal and pressure stresses will not result in combined stresses in excess of the material's resistance to fracture (K). The allowable pressures are revised periodically, often as a result of newly acquired data from the Reactor Vessel Surveillance Program (RVSP) (Section 5.4.3.6). The revised curves are based upon a benchmarked neutron fluence calculation. The use of an RT_{NDT} which includes the projected change in RT_{NDT} due to irradiation provides additional conservatism for the non-irradiated components of the reactor coolant system.

The results of the RVSP are used to verify the predicted shift in $RT_{NDT.}$ Changes in fracture toughness of the core region plates, forgings, weldments, and associated heat-affected zones resulting from radiation damage must be monitored by a surveillance program that conforms with the requirements of ASTM E-185, 1968. (Later editions may be used, but including only those editions through 1982. See References 16 & 27.) The evaluation of the radiation damage in this surveillance program is based on pre-irradiation and post-irradiation testing of Charpy v-notch

samples, and tensile specimens carried out during the lifetime of the reactor vessel. Wedge-opening loading specimens are used in supplemental fracture toughness testing if required. Specimens are irradiated in capsules located near the core mid-height, and are removed from the vessel at specified intervals.

The following information is HISTORICAL and is not intended or expected to be updated for the life of the plant.

Pre-irradiation test results for the materials contained in the reactor vessel are given in Table 5.2-26 (Unit 1) and 5.2-27 (Unit 2). The data presented in these tables were obtained using the actual surveillance report results for both units and the methods described in the Standard Review Plan, Branch Technical Position (BTP) MTEB 5.2. The copper content in both cases was determined using the methods outlined in Reference 8.

The original heatup and cooldown curves were developed before start-up. The predicted shifts in RT_{NDT} values for the original analysis were derived for the quarter-thickness and three-quarter-thickness in the limiting material at 5 EFPY (Unit 1) and 8 EFPY (Unit 2) using the correlated data in Figures 5.2-7 and 5.2-8.

Using the most limiting value of RT_{NDT} for the reactor vessel beltline, steady-state and heatup/cooldown rate-dependent RCS pressure/temperature operating limits are established. When the Low Temperature Overpressure Protection System (LTOPS) is enabled, the LTOPS setpoints provide bounding protection against exceeding the design basis pressure/temperature limit curve.

The currently applicable heatup and cooldown curves are incorporated in the North Anna Unit 1 and Unit 2 operating license as part of the applicable units' Technical Specifications. Typical heatup and cooldown curves are presented for informational purposes in Figures 5.2-5 and 5.2-6.

The discussion of the Low Temperature Operating Pressure System protection is provided in Section 5.2.2.2.

Temperature and pressure measurement uncertainties, and the pressure difference between the point of measurement (RCS hot leg) and the point of interest (reactor vessel beltline), were accommodated in the pressure/temperature limits analysis by incorporation of these factors into the Technical Specification pressure/temperature limit curves.

The reactor vessel closure heads have been replaced with closure heads that have impact properties exceeding the original head requirements. The low alloy steels have a RT_{NDT} of less than 10°F. The operating stresses in the replacement closure heads are essentially the same as the original heads. Therefore the point of interest (reactor vessel beltline) will not change and the

Technical Specification pressure/temperature limit curves will not change as a result of the closure head replacements.

5.2.3.3.2 Thermal Transient Stresses

In the event of a large LOCA, the reactor coolant system rapidly depressurizes, and the loss of coolant may empty the reactor vessel. If the reactor is at normal operating conditions before the accident, the reactor vessel temperature is approximately 550°F; if the plant has been in operation for some time, part of the reactor vessel is irradiated. At an early stage in the depressurization transient, the emergency core cooling system rapidly injects cold coolant into the reactor vessel. This results in thermal stress in the vessel wall. To evaluate the effect of the stress, three possible modes of failure are considered: ductile yielding, brittle fracture, and fatigue.

Ductile Mode—The failure criterion used for this evaluation is that there shall be no gross yielding across the vessel wall using the material minimum yield stress specified in Section III of the ASME Code. The combined pressure and thermal stresses during injection through the vessel thickness as a function of time have been calculated and compared to the material yield stress at the times during the safety injection transient.

The results of the analyses showed that local yielding may occur only in approximately the inner 18% of the base metal and in the vessel cladding, complying with the above criterion.

Brittle Mode—The possibility of a brittle fracture of the irradiated core region has been considered using fracture mechanics concepts. This analysis assumes the effects of water temperature, heat-transfer coefficients, and fracture toughness as a function of time, temperature, and irradiation. Both a local crack effect and a continuous crack effect have been considered with the latter requiring the use of a rigorous finite-element axisymmetric computer code. It is concluded on the weight of this evidence that thermal shock resulting from the LOCA will not produce catastrophic failure of the vessel wall even at the end of plant life.

Fatigue Mode—The failure criterion used for the failure analysis was as presented in Section III of the ASME Code (1968). In this method the component is assumed to fail once the combined usage factor at the most critical location for all transients applied to the vessel exceeds the code allowable usage factor of one.

The location in the vessel below the nozzle level that will see the emergency core cooling water and have the highest usage factor will be the incore instrumentation tube attachment welds to the vessel bottom head. As a worst-case assumption, the incore instrumentation tubes and attachment penetration welds are considered to be quenched to the cooling water temperature while the vessel wall maintains its initial temperature before the start of the transient. The maximum possible pressure stress during the transient is also taken into account. This method of analysis is quite conservative and yields calculated stresses greater than would actually be experienced. The resulting usage factor for the instrument tube welds considering all the

operating transients and including the safety injection transient occurring at the end of the plant life is below 0.2, which compares favorably with the code allowable usage factor of 1.0.

The generic stress reports for the reactor pressure vessel, steam generator, reactor coolant pump, and pressurizer have been completed, and in all cases the requirements of the applicable ASME Code sections have been satisfied for the design, normal, and upset condition. The faulted condition requirements in Table 5.2-14 are satisfied for the faulted condition loads. The most severely stressed areas can be identified from the stress reports. Even at the most severely stressed areas, all ASME Code requirements are met. The stress reports also include the evaluation of all transients required as listed in Section 5.2 and satisfy applicable ASME Code requirements for fatigue evaluation.

It is concluded from the results of these analyses that the delivery of a cold emergency core cooling water to the reactor vessel following a LOCA does not cause any loss of integrity of the vessel.

5.2.3.3.3 Reactor Coolant Pump Flywheel

Each reactor coolant pump flywheel consists of two thick plates bolted together. Each plate is fabricated from vacuum degassed A-533 Grade B Class I steel. Supplier certification reports are available for all plate materials providing three Charpy impact energy values at 10°F parallel and normal to the rolling direction.

Determining the acceptability of the flywheel material involves two steps as follows:

1. Establish a reference curve describing the lower bound fracture toughness behavior for the material in question.
2. Use Charpy (C_V) impact energy values obtained in certification tests at 10°F to fix position of the heat in question on the reference curve.

A low bound fracture toughness (K_{Id}) reference curve (see Figure 5.2-9) has been constructed from dynamic fracture toughness data generated by Westinghouse on A-533 Grade B Class I steel (Reference 9). All data points are plotted on the temperature scale relative to the nil-ductility transition temperature (NDTT). The construction of the lower boundary below which no single test point falls, combined with the use of dynamic data when flywheel loading is essentially static, represents a large degree of conservatism.

Of the 12 flywheel plates for North Anna, Units 1 and 2, the lowest Charpy impact energy value measured for any one plate was 32 ft-lb. Corten and Sailors (Reference 10) have determined an empirical formula describing the relationship between K_{Id} and C_V impact energy at low and intermediate temperatures. Data collected on A-533 Grade B are shown in Figure 5.2-10 with upper and lower scatter bands included. By using this approach and referring to the lower limit of scatter, a fracture toughness (K_{Id}) of 46 ksi-in$^{1/2}$ can be inferred at 10°F corresponding to the C_V

energy of 32 ft-lb. A considerable degree of conservatism is incorporated into these results. The inferred K_{Id} value of 46 ksi-in$^{1/2}$ is located on the reference curve (Figure 5.2-9) and is assigned at temperature of 10°F. This position is found on the curve at the 18°F position.

A shift to NDTT + 110, which corresponds to the predicted flywheel operating temperature of 120°F, gives a minimum fracture toughness in excess of 100 ksi-in$^{1/2}$. This conforms to AEC Regulatory Guide 1.14 requirement "c" that the dynamic stress intensity factor must be at least 100 ksi-in$^{1/2}$.

By assuming a minimum toughness at operating temperature in excess of 100 ksi-in$^{1/2}$, it can be seen by examination of the correlation in Figure 5.2-10 that the C_V upper-shelf energy must be in excess of 50 ft-lb; therefore, the requirement C.l.b. of Regulatory Guide 1.14, that the upper-shelf energy must be at least 50 ft-lb, is satisfied.

It is concluded that flywheel plate materials are suitable for use and meet the Regulatory Guide 1.14 acceptance criteria on the bases of suppliers certification data. Reactor coolant pump flywheel integrity is described in Reference 11.

The calculated stresses at operating speed are based on stresses due to centrifugal forces. The stress resulting from the interference fit of the flywheel on the shaft is less than 2000 psi at zero speed, but this stress becomes zero at approximately 600 rpm because of radial expansion of the hub.

The primary coolant pumps run at approximately 1190 rpm and may operate briefly at overspeeds up to 109% (1295 rpm) during loss of outside load. However, for conservatism, 125% of operating speed was selected as the design speed for the primary coolant pumps. The flywheels are given a manufacturers' test of 125% of the maximum synchronous speed of the motor.

Precautionary measures, taken to preclude missile formation from primary coolant pump components, ensure that the pumps will not produce missiles under any expected accident condition. Each component of the primary pump motors has been analyzed for missile generation. Any fragments of the motor rotor would be contained by the heavy stator. The same conclusion applies to the pump impeller because the small fragments that might be ejected would be contained by the heavy casing.

For turbine trips actuated by either the reactor trip system or the turbine protection system, the generator is maintained connected to the external network for 30 seconds to prevent a pump overspeed condition.

5.2.3.4 **Cleaning and Contamination Protection**

It is required that all austenitic stainless steel materials used in the fabrication, installation, and testing of NSSS components and systems be handled, protected, stored, and cleaned according to recognized and accepted methods and techniques. The rules covering these controls

are stipulated in the following Westinghouse process specifications. These process specifications supplement the equipment specification and purchase order requirements of every individual austenitic stainless steel component or system that Westinghouse procures for a nuclear steam supply system, regardless of the ASME Code classification. The process specifications are also given to the architect-engineer and to Vepco for use within their scope of supply and activity.

To ensure that manufacturers and installers adhere to the rules in these specifications, the surveillance of operations by Westinghouse personnel is conducted either in residence at the manufacturer's plant and the installer's construction site or during periodic engineering and quality assurance visits and audits at these locations.

The process specifications that establish these rules and that are in compliance with the more current ANSI N45 Committee specifications are as follows:

PS Number	
82560HM	Requirements for Pressure-Sensitive Tapes for use on Austenitic Stainless Steels.
83336K	Requirements for Thermal Insulation Used on Austenitic Stainless Steel Piping and Equipment.
83860LA	Requirements for Marking of Reactor Plant Components and Piping.
84350HA	Site-Receiving Inspection and Storage Requirements for Systems, Material, and Equipment.
84351NL	Determination of Surface Chloride and Fluoride on Austenitic Stainless Steel Materials.
85310QA	Packaging and Preparing Nuclear Components for Shipment and Storage.
292722	Cleaning and Packaging Requirements of Equipment for Use in the NSSS.
597756	Pressurized Water Reactor Auxiliary Tanks Cleaning Procedures.
597760	Cleanliness Requirements During Storage Construction, Erection, and Start-up Activities of Nuclear Power Systems.

Controls are imposed during fabrication, construction, and operation to minimize exposure to austenitic stainless steel surfaces to contaminants that could lead to stress corrosion cracking. Halogen-bearing compounds are avoided or halogen concentration restrictions are observed for shop and field cleaning, packaging, and handling procedures. Precautions are specified for keeping components protected and dry during shipment and storage. Water chemistry controls are required for flushing, testing, and operations to minimize the possibility of stress corrosion cracking. Either stainless steel insulation or nonmetallic insulation with acceptable $C1^-$ and (Na^+ plus SiO^-_3), as determined by Figure 1 of Regulatory Guide 1.36 (excluding F^- analysis) is used on austenitic stainless steel to minimize the possibility of stress corrosion cracking.

Special cleanliness requirements for NSSS electrical components, instrumentation, core materials, and reactor vessel internals are incorporated into the process specifications.

A specification for site housekeeping based on the ANSI N45 Committee recommendations has also been prepared for North Anna Units 1 and 2. This specification defines area control requirements to ensure that the requisite qualities of each portion of the plant are preserved and that the cleanliness level attained in following the various process specifications is not degraded.

In general, all of the material listed in Tables 5.2-22 and 5.2-23 that are used in principal pressure-retaining applications and are subject to elevated temperature during system operation are in contact with thermal insulation that covers their outer surfaces.

The thermal insulation used on the reactor coolant boundary is specified to be either reflective stainless steel type or to be made of compounded materials that yield low leachable chloride and/or fluoride concentrations. The compounded materials in the form of blocks, boards, cloths, tapes, adhesives, cements, etc., are silicated to provide the protection of austenitic stainless steels against stress corrosion associated with results from accidental wetting of the insulation by spillage, minor leakage, or other contamination. Each lot of insulation material is qualified and analyzed in accordance with Westinghouse PWR process specification 83336 KA to ensure that all of the materials provide a compatible combination for the reactor coolant boundary.

The reactor vessel closure head metal reflective insulation used on NAPS Unit 1 and Unit 2 was qualified and analyzed in accordance with Framatome ANP design specifications 08-5023496 and 08-5021646 (References 24 & 25).

In the event of coolant leakage, the ferritic materials will show increased general corrosion rates. Where minor leakage is expected from service experience (valve packing, pump seals, etc.), materials compatible with the coolant are used. These are shown in Table 5.2-22 and 5.2-23. Ferritic materials exposed to coolant leakage can be observed as part of the inservice visual and/or nondestructive inspection program to ensure the integrity of the component for subsequent service.

5.2.4 Reactor Coolant Pressure Boundary Leakage Detection Systems

5.2.4.1 Leakage to the Containment

5.2.4.1.1 Leakage Detection

Leakage from the reactor coolant pressure boundary (RCPB) to the containment atmosphere is detected and is indicated in the main control room by one or more of the following methods:

1. Containment gaseous radioactivity monitor (measurement range: $10\text{-}10^6$ cpm).
2. Containment particulate radioactivity monitor (measurement range: $10\text{-}10^6$ cpm).

3. Containment structure leakage monitoring system.
4. Containment sump monitoring.
5. Reactor coolant system makeup rate.

Indications and alarms are provided for all of the above systems in the control room.

The RCS leakage detection systems monitor and detect leakage from the reactor coolant pressure boundary during normal plant operations and after seismic events to provide prompt and quantitative information to the operators to permit immediate corrective actions should the reactor coolant pressure boundary leak be detrimental to the safety of the facility.

These detection systems are generally consistent with the recommendations of Regulatory Guide 1.45, *Reactor Coolant Pressure Boundary Leakage Detection Systems,* May 1973. The containment atmospheric particulate and gaseous radioactivity monitoring system is not fully seismically qualified. Consistent with Regulatory Guide 1.45 these monitors can perform their intended function during normal plant operations. To ensure the safety function of detecting reactor coolant pressure boundary leakage is maintained after a seismic event the operability of these monitors is required to be verified immediately following a seismic event or the affected unit(s) will be shut down and cooled down to Cold Shutdown.

Generic Letter 84-04, *Safety Evaluation of Westinghouse Topical Reports Dealing with Elimination of Postulated Pipe Breaks in PWR Primary Main Loops,* dated February 1, 1984 permitted the elimination of the asymmetric blowdown loads resulting for double ended pipe breaks in the main coolant loop piping from the design basis of Westinghouse Owner's Group plants with two conditions. The second condition required leakage detection systems at the facility sufficient to provide adequate margin to detect the leakage from a postulated circumferential throughwall flaw utilizing the guidance of Regulatory Guide 1.45 with the exception that seismic qualification of the airborne particulate radiation monitor was not necessary. At least one leakage detection system with a sensitivity capable of detecting 1 gpm in 4 hours must be operable.

Based on NRC's generic *Safety Evaluation Report for Elimination of Postulated Pipe Breaks in PWR Primary Main Loops* and the North Anna specific Safety Evaluation Report (amendment numbers 107 for Unit 1 and 93 for Unit 2 dated December 5, 1988), it is no longer necessary to have the containment airborne particulate radiation monitor seismically qualified for the detection of reactor coolant system pressure boundary leakage after a safe shutdown earthquake.

Following a seismic event, the leakage detection systems will continue to operate with the exception of the containment gaseous and particulate radioactivity monitors and heat load determination from the containment recirculation system coolers.

1. Containment Gas and Particulate Radiation Monitors - Experience has shown that these monitors respond rapidly to reactor coolant system leakage and provide a sensitive indication of such leakage. The time required to detect reactor coolant leakage depends on the size of the break, reactor coolant activity level, and containment background activity.

   The sensitivities of the gaseous and particulate monitors are shown in Figure 5.2-11 along with a graph of the time required for the minimum detectable concentration associated with a given leak rate to reach the detector. Both the gaseous radioactivity monitor and the particulate radioactivity monitor have sensitivities such that a 1-gpm leak from the reactor coolant pressure boundary can be detected within an hour under the following conditions:

   a. There is not prior reactor coolant leakage into the containment.

   b. The reactor coolant activities are based on the expected failed fuel values listed in Table 11.1-7B for 0.2% failed fuel.

   Early in plant life, in conditions of low failed fuel (below 0.01%), the system is not capable of detecting the 1-gpm leak within 1 hour, as required by Regulatory Guide 1.45. This inability to meet the sensitivity of the Regulatory Guide holds true for conditions of prior leakage with high-percent failed fuel where existing containment activity could mask any activity increase resulting from a 1-gpm increase in leakage.

2. Containment Structure Leakage Monitoring System - Sensitivity of the leakage monitoring system (Section 6.2.7) to leakage from the RCPB is dependent on the sensitivity of the instrumentation.

   Instrumentation in the leakage monitoring system that can be used to detect increases in containment temperature and pressure consists of pressure instruments with an uncertainty of 1.055 psi and temperature instruments with an uncertainty of 0.788°F.

   The information provided by these instruments can be used to detect increases in containment pressure and temperature that is indicative of a leak from the RCS.

3. Containment Sump - Leakage from unidentified sources will pass to the containment structure in the liquid and vapor phases and will be collected in the containment sump. The containment structure has areas that may temporarily hold up small amounts of liquid and thus prevent the liquid from immediately reaching the containment sump. In addition, the containment sump also collects liquid from sources other than the RCPB. The determination of exact RCPB leakage by measuring collected water in the containment sump is not accurate to 1 gpm within 1 hour but is capable of 1 gpm in 4 hours.

Leakage from the RCPB by identified sources is collected in portions of the vent and drain system within the containment. These sources include valve packing leakoffs and reactor coolant seal leakoffs. These systems are piped separately and maintained isolated from potential unidentified sources. This system is described in Section 9.3.3.

4. Reactor Coolant System Makeup Rate - Any leakage from the RCPB causes an increase in the amount of makeup water required to maintain normal level in the pressurizer. The demineralized water and concentrated boric acid makeup flow rates are both recorded and alarmed in the main control room.

5. Normal Leakage - Valve stem, seal, and flange systems that are part of the reactor coolant pressure boundary and from which normal design leakage is expected are provided with drains or auxiliary sealing systems. Section 9.3 describes those components from which the leakage is collected either in the primary drain transfer tank or pressurizer relief tank.

   a. The reactor coolant pump seal leakoff is described in Section 5.5.1.3.

   b. Leakage from the pressurizer safety valves will be identified by temperature sensors that transmit to the main control room. Any temperature increase above the containment ambient temperature that is detected by these sensors will indicate safety valve leakage.

   c. Leakage from the reactor vessel flange gasket is piped to the primary drain transfer tank.

Operating experience from the R. E. Ginna plant has indicated that the average total leakage from the reactor coolant system, including the charging and letdown portion of the chemical and volume control system, was about 0.5 gpm. Major sources of this leakage were the reciprocating charging pump seals, averaging about 0.2 gpm, and the valves in the pressurizer spray and spray bypass system, which averaged between 0.2 gpm and 0.5 gpm between repackings.

The North Anna Power Station, Units 1 and 2, uses valves which eliminate the large valve leakages experienced at the R. E. Ginna plant. The pressurizer spray valves are rotary vee ball type control valves, which have less stem leakage than globe type valves, and the pressurizer spray valves bypass valves are weir type diaphragm valves.

Also, the design does not include any reciprocating charging pump (there are three centrifugal charging pumps), so there is no leakage from this source.

Intersystem leakage, such as leakage from the reactor coolant system to the steam generators or from the reactor coolant system to the component cooling system, can be detected by continuous radiation monitors in these two systems. These detection systems are described in Section 11.4.

While the leakage detection system is not capable of detecting a 1-gpm leak in 1 hour under all conditions, the system is capable of detecting a 5-gpm leak in 1 hour under all conditions. A 1 gpm leak in 4 hours can also be determined during steady state operation. The identification of

leakage sources and the required sensitivity relative to critical cracks are discussed in Section 5.2.4.1.2. Reference 1 discusses critical cracks in piping systems. The results of this report can be used to show that for pipes greater than 4 inches in diameter a crack capable of leaking at 5 gpm is smaller than a critical crack. Therefore, catastrophic failure of the piping system is not expected for this 5-gpm leak. For lines 4 inches and smaller, core cooling analysis shows that breaks of this equivalent cross-sectional area will not result in reactor fuel clad damage; therefore, the sensitivity of 5 gpm under all conditions is justified.

5.2.4.1.2 Identification of Leak Sources

Leakage is collected from all components from which significant leakage is expected. Other leakage sources can be roughly located by abnormal changes in temperature or humidity in any specific region of the containment.

Reference 1 shows that, for lines 3 inches or more in diameter, leakage through a critical through-wall crack is considerably greater than the minimum detectable leak.

Reference 1 also provides the length of a critical through-wall crack for lines 2 inches or greater in diameter and the ratio of this crack length to that of a crack permitting 2-gpm leakage for pipe diameters 4 inches and greater. The mathematical model used for this analysis is also given in Reference 1.

5.2.4.1.3 Testing

The RCPB leak detection systems are tested periodically as outlined in the Technical Specifications.

5.2.4.1.4 Maximum Allowable Leakage

Maximum allowable leakage rates from the RCPB have been established in the Technical Specifications.

5.2.4.2 **N-16 Primary to Secondary Leakage Detection System**

There are four N-16 leak detection systems per unit. Three of the detectors are located adjacent to each of the main steam lines where they enter the Mechanical Equipment Room (MER) and one at the main steam header in the turbine building. They continuously monitor main steam and provide a digital indication and recorder input to the control room. All four N-16 indicators have been located in the existing Westinghouse Radiation Monitoring Cabinets. They provide a digital indication of 1 to 1000 gallons per day of primary to secondary leakage. The recorder display is a 3 decade log scale. Alarm inputs are representative of an alert condition (10 gpd), hi (50 gpd), hi-hi (100 gpd) of leakage above base line data. A system failure alarm also alerts the operator of an internal malfunction. All central processing units (CPUs) are housed in an air conditioned N-16 enclosure located in the turbine building on the main operating level, south wall.

The N-16 leak detection systems are designed for continuous operation. Continuous, as used to describe the operation of the N-16 leak detection systems, means that the monitors provide the required information at all times with the following exceptions: (1) the systems are not required to be in operation because of specified plant conditions provided in the Technical Requirements Manual, or (2) a system is out of service for testing or maintenance and approved alternate monitoring methods are in place.

The N-16 leak detection system is an indicating system and does not interact with any plant controlling system. Each steam generator N-16 channel provides an input to the ERF data acquisition system.

5.2.5 Inservice Inspection Programs

5.2.5.1 Program

The inservice inspection programs for Units 1 and 2 verify that the structural integrity of the reactor coolant pressure boundary is maintained throughout the life of the station. This verification will ensure compliance with the requirements of 10 CFR 50.55a(g), which requires incorporation of the requirements of Section XI of the ASME Boiler and Pressure Vessel Code, *Rules for Inservice Inspection of Nuclear Reactor Coolant Systems.*

The ISI programs consist of a preservice or baseline inspection and continuing inspections based on 120-month (10 year) intervals. Each interval requires re-evaluation of the program against the latest Section XI code edition incorporated by reference into 50.55a(g) at the time the program is developed.

Interval and ASME Section XI Code applicability are documented in the ISI Manual. The ISI programs are described in References 12 and 13. These references provide specific information on the scope of the particular unit's ISI program (including boundaries) and compliance with Section XI (including the applicable code cases incorporated into the ISI program); and they identify those Section XI requirements that are deemed impractical. Relief from these impractical requirements has been developed in accordance with 10 CFR 50.55a(g)(5)(iii).

The following components and areas are available and accessible for visual and nondestructive examination:

1. Reactor vessel: The entire inside surface, including longitudinal and circumferential weld joints.
2. Reactor vessel nozzles: The entire inside surface, including weld joints.
3. Reactor vessel closure head: The entire inside and outside surfaces, including weld joints.
4. Reactor vessel studs, nuts, and washers.

5. Welds between the main coolant piping, reactor vessel, steam generators, reactor coolant pumps, the chemical and volume control piping, and safety injection system piping.
6. Reactor internals and supports.
7. Reactor vessel flange seal surface.
8. CRD shafts.
9. CRDM assemblies.
10. Selected areas of reactor coolant pipe external surfaces (except for the 5-foot penetration of the primary shield).
11. Steam generator: The external surface, the internal surfaces of the steam drum, and the channel head.
12. Pressurizer: The internal and external surfaces.
13. Reactor coolant pump: The external surfaces, motor, and impeller.
14. Loop stop valves.
15. Regenerative heat exchanger: The external surface and nozzle welds.

A discussion of exceptions to the ASME Code, Section XI, including justifications for those exceptions, was submitted to the NRC (References 14 & 15).

The considerations that are incorporated into the reactor coolant system design to permit the above inspections are the following:

1. All reactor internals are completely removable. The storage space required to permit these inspections is provided.
2. The closure head is stored dry in the containment structure during refueling to facilitate direct visual inspection.
3. All reactor vessel studs, nuts, and washers are removed to dry storage during refueling.
4. Provision is made to remove portions of the supplementary neutron shield of the coolant nozzles. The insulation covering the nozzle welds may be removed.
5. Access holes in the lower internals barrel flange allow remote access to the reactor vessel internal surfaces between the flange and the nozzles without the removal of the internals.
6. A removable plug in the lower core support plate allows access for the inspection of the bottom head without removal of the lower internals.
7. The storage stands for the storage of the upper internals package allow inspection access to both the inside and outside of the structure. No permanent storage stand is provided for the

lower internals package. However, it can be removed from the reactor vessel and temporarily stored.

8. The CRDM design allows the removal of the mechanism assembly from the reactor vessel head by the cutting of seal welds.
9. Manways are provided in the steam generator steam drum and channel head to allow access for internal inspection.
10. A manway is provided in the pressurizer top head to allow access for internal inspection.
11. Insulation on primary system components (except the reactor vessel) and selected portions of the piping (except for the penetration in the primary shield) may be removed.

Conventional nondestructive test techniques can be used for the inspection of primary loop components other than the reactor vessel. The reactor vessel presents special problems because of radiation levels and underwater accessibility that restrict usual test techniques. The following steps are incorporated in the design, manufacturing, and installation to prepare the vessel for nondestructive examinations:

1. Shop ultrasonic examinations were performed on all internally clad surfaces to an acceptance and repair standard to ensure an adequate cladding bond to allow later ultrasonic testing of the base metal from the inside surface. The size of cladding bond defect allowed was 1/4 inch by 3/4 inch with the greater direction parallel to the weld.
2. Ultrasonic examinations and mapping of all pressure boundary welds on the vessel were performed after installation to provide a baseline for future ultrasonic examinations.
3. The internal reactor vessel shell, in the core area, presents a clean, uncluttered cylindrical surface that permits the positioning of test equipment without obstruction.
4. During the manufacturing stage, additional areas of the reactor vessel were tested by ultrasonic methods and mapped to provide further assurance that any indications were below acceptance thresholds.

It is planned to use automated, remote ultrasonic examination techniques to volumetrically examine pressure boundary welds in the reactor vessels. The internal surface of the reactor vessels will be inspected periodically using optical devices over the accessible areas. During refueling, the vessel cladding will be inspected in certain areas between the closure flange and the primary coolant inlet nozzles, and, if deemed necessary by this inspection, the core barrel will be removed making the entire inside vessel surface accessible. Externally, the CRDM nozzles on the closure head, the instrument nozzles on the bottom of the vessel, and the extension spool pieces on the primary coolant outlet nozzles are accessible for inspection during refuelings.

The closure head is examined visually during each refueling. Optical devices permit visual inspection of the cladding. CRDM nozzles on the closure head, the instrument nozzles on the

bottom of the vessel, and the extension spool pieces on the primary coolant nozzles are accessible for inspection during refuelings.

Records are maintained in accordance with Section IS-600 of the edition of the ASME Code and addenda to which the inservice inspection is being conducted.

Additional augmented inservice inspection programs for high-energy piping within the containment and outside the containment are discussed in Section 3.6.

5.2.5.2 **Inservice Inspection Equipment**

The equipment planned for use in performing the reactor vessel and nozzle baseline and inservice inspections consists of a remote-controlled manipulator mounted internally in the vessel, which will automatically position ultrasonic transducers to carry out the prescribed examinations.

The baseline data enables the reinstallation of the automated inspection machine during the inservice inspections phase to duplicate the original machine and transducer settings. In this manner, changes from the original examinations can be detected. In addition to CRT displays, hand copy printed tapes will be provided.

5.2.5.3 **Loose Parts Monitoring**

The loose parts monitoring system for each unit consists of 10 sensors and appropriate signal conditioners that monitor vibration and impacts from slightly below audible (about 20 Hz) to near the top end of audible (about 15kHz). Of these 10 sensors, 5 are active, with circuitry that is complete; the remaining 5 are reserve or standby units with sensors in place and cabling and preamplifiers installed. Toggle switches connect either the active or passive sensors into the active channel.

An active sensor and a reserve sensor are located at each of the following positions:

1. Reactor vessel head flange.
2. Reactor vessel bottom (instrument tube).
3. Steam generators A, B, and C above tubesheet.

Signal preamplifiers and shielded cable are used to transmit the signals to the control room. Signal readout in the control room consists of the following:

1. Visual displays.
   a. A digital meter with a selector switch to monitor the level of the wideband signal of each channel. Each noise bi-stable module will have a light to indicate vibration and loose parts conditions.
   b. A three-pen chart recorder provides for real-time data analysis.
2. Audio monitoring of any channel by a speaker and headphones. A switch is provided for selecting the output from any single channel.
3. Auxiliary outputs provided for both active and passive channels allow monitoring with external equipment such as oscilloscopes, oscillographs, and spectrum analyzers.

5.2.5.4 **Vibration Monitoring**

The vibration monitoring system is an adaptation of the Bentley-Nevada Series 7000 monitoring system for use on the Westinghouse reactor coolant pumps to provide continuous monitoring of both shaft and frame vibration.

The following equipment is supplied on each unit:

1. Probes (three per pump) provide linear range over 100 mils.
2. Seismoprobes (two per pump) measure frame vibration, mounted at the top of the motor support stand.
3. Proximeters (three per pump) - amplifying units that condition the electrical energy supplied to the probe and adjust the signal returned from the probe to provide a voltage output proportional to distance change.
4. Converters (two per pump) - velocity to displacement converters to change the output from the seismoprobes.
5. Meters (two per pump, range 0 to 30 mil) - one reads shaft vibration, and the other reads frame vibration. The meters read the highest probe at each location and have a switch that enables the selection of either probe when required.
6. Keyphasor module (one per plant) provides plug jacks for the readout of the keyphase probe balancing.
7. Common power supply module provides operating voltages for all monitors and transducers.

Items 1 through 4 are located inside the containment and mounted on the pump and motor support stand.

5.2 REFERENCES

1. J. J. Szyslowski and R. Salvatori, *Determination of Design Pipe Breaks for the Westinghouse Reactor Coolant System*, WCAP-7503, Revision 1, 1972.
2. W. J. O'Donnell, *A Study of Perforated Plates with Square Penetration Patterns*, WRC 124, 1967.
3. G. J. DeSalvo and J. A. Swanson, *ANSYS User's Manual*, Engineering Analysis Systems Report, 1972.
4. A. Mendleson, *Plasticity: Theory and Application*, MacMillan, New York, 1968.
5. K. Cooper, R. M. Starek, and V. Miselis, *Overpressure Protection for Westinghouse Pressurized Water Reactors*, WCAP-7769, Revision 1, 1972.
6. J. A. Nay, *Process Instrumentation for Westinghouse Nuclear Steam Supply Systems*, WCAP-7671, 1971.
7. W. S. Hazelton, *Sensitized Stainless Steel in W PWR Nuclear Steam Supply System,* WCAP-7735, 1971.
8. W. W. Hazelton et al., *Basis for Heatup and Cooldown Limit Curves*, WCAP-7924, 1972.
9. W. O. Shabbits, *Dynamic Fracture Toughness Properties of Heavy Section A-533 Grade B Class 1 Steel Plate*, WCAP-7623, 1970.
10. H. T. Corten and R. H. Sailors, *Relationship Between Material Fracture Toughness Using Fracture Mechanics and Transition Temperature Tests*, UILU-ENG 71-600, 1971.
11. R. Salvatori, *Reactor Coolant Pump Integrity in LOCA*, WCAP-8163, Westinghouse Electric Corporation, 1973.
12. Inservice Inspection Program for Components and Component Supports—Unit 1.
13. Inservice Inspection Program for Components and Component Supports—Unit 2.
14. Vepco letter 480/101977 to E. G. Case, NRC, dated December 16, 1977.
15. Vepco letter dated May 22, 1987 (Serial #86-796A).
16. Letter from USNRC to J. P. O'Hanlon, *North Anna Power Station Unit 1 and Unit 2—Revision to Reactor Vessel Surveillance Capsule Withdrawal Schedule,* Serial No. 99-446, dated August 13, 1999.
17. Letter from L. N. Hartz to USNRC, *Virginia Electric and Power Company, North Anna Power Station Units 1 and 2, Surry Power Station Units 1 and 2, Evaluation of Reactor Vessel Materials Surveillance Data,* Serial No. 99-452A, dated November 19, 1999.

18. Letter from L. N. Hartz to USNRC, *Virginia Electric and Power Company, North Anna Power Station Unit 2, Evaluation of Reactor Vessel Materials Surveillance Data,* Serial No. 00-463, dated September 19, 2000.

19. Letter from L. N. Hartz to USNRC, *Virginia Electric and Power Company, North Anna Power Station Unit 2, Application of Sequoyah 2 Surveillance Data to North Anna Unit 2 Reactor Vessel Weld Material Fabricated from Weld Wire Heat 4278,* Serial No. 01-262, dated April 27, 2001.

20. Framatome ANP Document No. 38-1290372, *RCCM/ASME Equivalency Report—Base Materials for North Anna Unit 2 Reactor Vessel Closure Head.*

21. Framatome ANP Document No. 38-1290373, *RCCM/ASME Equivalency Report—Filler Materials for North Anna Unit 2 Reactor Vessel Closure Head.*

22. Framatome ANP Document No. 38-1290441, *RCCM/ASME Equivalency Report—Base Materials for North Anna Unit 1 Reactor Vessel Closure Head.*

23. Framatome ANP Document No. 38-1290448, *RCCM/ASME Equivalency Report—Filler Materials for North Anna Unit 1 Reactor Vessel Closure Head.*

24. Framatome ANP Document 08-5021646, *Replacement RVCH Insulation North Anna 2,* Revision 01, December 2002.

25. Framatome ANP Document 08-5023496, *Replacement RVCH Insulation North Anna 1,* Revision 00, February 2003.

26. Letter from W.R. Matthews to USNRC, *Virginia Electric and Power Company, North Anna Power Station Units 1 and 2, Proposed Technical Specifications Change Request, Reactor Coolant System Pressure/Temperature Limits, LTOPS Setpoints and LTOPS Enable Temperatures,* Serial No. 04-380, dated July 1, 2004.

27. Letter from USNRC to D.A. Christian, *North Anna Power Station, Unit Nos. 1 and 2 (North Anna 1 and 2)—Approval of Proposed Reactor Vessel Material Surveillance Capsule Withdrawal Schedule (TAC Nos. MC6412 and MC6413),* Serial No. 06-271, dated March 15, 2006.

Table 5.2-1
ASME CODE CASES FOR WESTINGHOUSE PWR CLASS 1 COMPONENTS

Code Case	Title
1141	Foreign Produced Steel
1332	Requirements for Steel Forgings
1334	Requirements for Corrosion Resistant Steel Bars
1335	Requirements for Bolting Material
1337	Requirements for Special Type 403 Modified Forgings or Bars (Section III)
1344	Requirements for Nickel-Chromium Age-Hardenable Alloys
1345	Requirements for Nickel-Molybdenum-Chromium-Iron Alloys
1355	Electroslag Welding
1358	High Yield Strength Steel for Section III Construction
1360	Explosive Welding
1361	Socket Welds
1364	Ultrasonic Transducers SA-435 (Section II)
1384	Requirements for Precipitation Hardening Alloy Bars and Forgings
1388	Requirements for Stainless Steel - Precipitation Hardening
1390	Requirements for Nickel-Chromium Age-Hardenable Alloys for Bolting
1395	SA-508, Class 2 Forgings - Modified Manganese Content
1401	Welding Repair to Cladding
1407	Time of Examination
1412	Modified High Yield Strength Steel
1414	High Yield Strength Cr-Mo
1423	Plate; Wrought Type 304 and 316 with Nitrogen Added
1433	Forgings; SA-387
1434	Class 8N Steel Casting (Postweld Heat Treatment for SA-487)
1448	Use of Case Interpretations of ANSI B31 Code for Pressure Piping
1456	Substitution of Ultrasonic Examination
1459	Welding Repairs to Base Metal
1461	Electron Beam Welding
1470	External Pressure Charts for Low Alloy Steel

Table 5.2-1 (continued)
ASME CODE CASES FOR WESTINGHOUSE PWR CLASS 1 COMPONENTS

Code Case	Title
1471	Vacuum Electron Beam Welding of Tube Sheet Joints
1474	Integrally Finned Tubes (Section III)
1477	B31.7, ANSI 1970 Addenda
1484	SB-163 Nickel-Chromium-Iron Tubing at a Specified Minimum Yield Strength of 40,000 psi
1487	Evaluation of Nuclear Piping for Faulted Conditions
1492	Postweld Heat Treatment
1493	Postweld Heat Treatment
1494	Weld Procedure Qualification Test
1495	Stress Indices in Table NB-3683.2-1
1498	SA-508, Class 2, Minimum Tempering Temperature
1501	Use of SA-453 Bolts in Service Below 800°F without Stress Rupture Tests
1504	Electrical and Mechanical Penetration Assemblies
1505	Use of 26 Cr-1 Mo Steel
1508	Allowable Stresses, Design Stress Intensity and/or Yield Strength Valves
1514	Fracture Toughness Requirements
1515	Ultrasonic Examination of Ring Forgings for Shell Section of Section III, Class 1 Vessels
1516	Welding of Non-Integral Seats in Valves for Section III Application
1517	Material Used in Pipe Fittings
1519	Use of A-105-71 in lieu of SA-105
1521	Use of H. Grades SA-240, SA-479, SA-336, and SA-358
1522	ASTM Material Specifications
1523	Plate Steel Refined by Electroslag Remelting
1524	Piping 2 in. NPS and Smaller
1525	Pipe Descaled by Other Than Pickling
1526	Elimination of Surface Defects
1527	Integrally Finned Tubes
1528	High Strength SA-508 Class 2 and SA-541 Class 2 Forgings for Section III Construction of Class 1 Components

Table 5.2-1 (continued)
ASME CODE CASES FOR WESTINGHOUSE PWR CLASS 1 COMPONENTS

Code Case	Title
1529	Material for Instrument Line Fittings
1531	Electrical Penetrations, Special Alloys for Electrical Penetrations Seals
1534	Overpressurization of Valves
1535	Hydrostatic Test of Class 1, Nuclear Valves
1539	Metal Bellows and Metal Diaphragm Steam Sealed Valves, Class 1, 2, and 3
1542	Requirements for Type 403 Modified Forgings or Bars for Bolting Material
1544	Radiographic Acceptance Standards for Repair Welds
1545	Test Specimens from Separate Forgings for Class 1, 2, 3, and MC.
1546	Fracture Toughness Test for Weld Metal Section
1547	Weld Procedure Qualification Tests; Impact Testing Requirements, Class 1
1552	Design by Analysis of Section III Class 1 Valves
1556	Penetrameters for Film Side Radiographs in Table T-320 of Section V
1567	Test Lots for Low Alloy Steel Electrodes
1568	Test Lots for Low Alloy Steel Electrodes
1571	Materials for Instrument Line Fittings; for SA-234 Carbon Steel Fittings
1573	Vacuum Relief Valves
1574	Hydrostatic Test Pressure for Safety Relief Valves
2142	NiCrFe Alloy UNS NO6052 (Unit 2)
2143	NiCrFe Alloy UNS W86152 (Unit 2)

Table 5.2-2
ASME CODE CASES FOR CLASS 1 COMPONENTS

Code Case	Title
N-20-1	SB-163 NiCrFe Tubing at a Specified Minimum Yield Strength of 40.0 ksi
N-401-1	Eddy Current Examination
N-411	Alternative Damping Values for Seismic Analysis of Classes 1, 2, and 3 Piping Sections
N-474-1	Design Stress Intensities and Yield Strength Values for UNS N06690 with a Minimum Specified Yield Strength of 35.0 ksi
N-474-2	Design Stress Intensities and Yield Strength Values for UNS N06690 with a Minimum Specified Yield Strength of 35 ksi, Class 1 Components, Section III, Division 1
2142-1	F-Number Grouping for NiCrFe, Classification UNS N06052 Filler Metal Section IX
2143-1	F-Number Grouping for NiCrFe, Classification UNS W86152 Welding Electrode Section IX

Table 5.2-3
EQUIPMENT CODE AND CLASSIFICATION LIST

Component	ANS Safety Class	Code	Code Class	Edition and Addenda
Reactor coolant system				
Reactor vessel[a]	1	ASME III	A	1968 Edition through Winter 1968 Addenda
Control rod drive mechanism housing	1	ASME III	A	1968 Edition through Winter 1968 Addenda
Steam generator[b]				
Tube side	1	ASME III	A	1968 Edition through Winter 1968 Addenda
Shell side	2[c]	ASME III	A[c]	1968 Edition through Winter 1968 Addenda
Reactor coolant stop valves[d]	1	ASME III	A	1968 Edition through Summer 1969 Addenda
Pressurizer	1	ASME III	A	1968 Edition through Winter 1968 Addenda

Key: NNS = nonnuclear safety

a. The Reactor Vessel Closure Heads were Fabricated and Manufactured in accordance with the French Construction Code (R-CCM) 1993 Edition with, 1st Addenda June 1994, 2nd Addenda June 1995, 3rd Addenda June 1996 and Modification Sheets FM 797, 798, 801, 802, 803, 804, 805, 806, and 807. The sizing calculations and the stress and fatigue analysis were performed to ASME B&PV Code, Section III, 1995 Edition 1996 Addenda. The Design Reports certified that the closure heads meet the design requirements and stress limits for the ASME B&PV Code, Section III, 1968 Edition through Winter 1968 Addenda.

b. Code edition is for Class I Stress Reports. Replacement steam generators were fabricated and manufactured in accordance with the 1986 Edition of ASME III.

c. Code design requirements assigned are in excess of the requirement dictated by the applicable Safety Class.

d. The only ASA B31.1 Code Case applied for valves within the reactor coolant system was Code Case N-10, liquid penetrant acceptance standards for cast materials. The purchase order dates for the valves varied from February 1969 through February 1971. A complete discussion of Code effectivity and applicability for these valves was carried on in the PSAR stage of review, reference AEC question 4.32. At that time, it was determined that the codes applied in the construction of the valves were adequate. (Reference pages 13 and 14 of the Safety Evaluation Report, dated October 14, 1970.)

Table 5.2-3 (continued)
EQUIPMENT CODE AND CLASSIFICATION LIST

Component	ANS Safety Class	Code	Code Class	Edition and Addenda
Reactor coolant system (continued)				
Reactor coolant piping, fittings, and fabrication[e]	1	USAS B31.7	1[f]	1969
Surge pipe, fittings, and fabrication	1	USAS B31.7	1[f]	1969
Loop bypass line	1	USAS B31.7	N/A	1969
Loop stop valves[d]	1	ASME III	A	1968 Edition through Winter 1968 Addenda
Reactor coolant thermowells[e]	1	USAS B31.7	N/A	
Safety valves	1	ASME III	A	1968 Edition through Winter 1968 Addenda
Relief valves	1	ANSI B16.5	N/A	1968 Edition through Winter 1968 Addenda
Valves to reactor coolant pressure boundary	1	USAS B31.7, B16.5	N/A	MSS-SP-65 1968 Edition or ASME III
Pressurizer relief tank	NNS	ASME VIII	UW	
Control rod drive mechanism head adaptor plugs	1	ASME III	1	1995 Edition with 1996 Addenda
Core exit thermocouple nozzle assembly	1	ASME III	1	1989 Edition with no Addenda

Key: NNS = nonnuclear safety

d. The only ASA B31.1 Code Case applied for valves within the reactor coolant system was Code Case N-10, liquid penetrant acceptance standards for cast materials. The purchase order dates for the valves varied from February 1969 through February 1971. A complete discussion of Code effectivity and applicability for these valves was carried on in the PSAR stage of review, reference AEC question 4.32. At that time, it was determined that the codes applied in the construction of the valves were adequate. (Reference pages 13 and 14 of the Safety Evaluation Report, dated October 14, 1970.)

e. Reactor coolant system narrow range RTD thermowells and RVLIS pipe connections on the reactor coolant hot leg piping were installed under the RTD Bypass Line Elimination Projects. The thermowells and piping connections are designed in accordance with ASME Section III-1980 requirements and reconciled to the Original Construction Code.

f. The purchase order date for the reactor coolant system piping was April 30, 1969. The purchase order date for the reactor coolant system fittings was December 24, 1969.

Table 5.2-3 (continued)
EQUIPMENT CODE AND CLASSIFICATION LIST

Component	ANS Safety Class	Code	Code Class	Edition and Addenda
Reactor coolant system (continued)				
Reactor coolant pump standpipe orifice	NNS	No code	-	
Reactor coolant pump standpipe	NNS	ASME VIII	-	
Reactor coolant pump				
Reactor coolant pump casing	1	ASME III		1968 Edition through Winter 1970 Addenda
Main flange	1	ASME III	A	1968 Edition through Winter 1970 Addenda
Thermal barrier	1	ASME III	A	1968 Edition through Winter 1970 Addenda
No. 1 seal housing	1	ASME III	A	1968 Edition through Winter 1970 Addenda
No. 2 seal housing	2[d]	ASME III	A[c]	1968 Edition through Winter 1970 Addenda
Pressure retaining bolting	1 or 2[d]	ASME III	A	1968 Edition through Winter 1970 Addenda
Remaining parts	NNS	ASME III		1968 Edition through Winter 1970 Addenda
Vent System				
Vessel vent piping and fittings up to orifices	-	ANSI B31.7	1	
Vessel vent piping and fittings after orifices	-	ANSI B31.7	2	
Pressurizer vent piping and fittings up to orifice	-	ANSI B31.7	1	
Pressurizer vent piping and fittings after orifice	-	ANSI B31.7	2	
Isolation valves	-	ASME III	1	1977

Key: NNS = nonnuclear safety

c. Code design requirements assigned are in excess of the requirement dictated by the applicable Safety Class.

d. The only ASA B31.1 Code Case applied for valves within the reactor coolant system was Code Case N-10, liquid penetrant acceptance standards for cast materials. The purchase order dates for the valves varied from February 1969 through February 1971. A complete discussion of Code effectivity and applicability for these valves was carried on in the PSAR stage of review, reference AEC question 4.32. At that time, it was determined that the codes applied in the construction of the valves were adequate. (Reference pages 13 and 14 of the Safety Evaluation Report, dated October 14, 1970.)

Table 5.2-4
SUMMARY OF REACTOR COOLANT SYSTEM DESIGN TRANSIENTS

Transients	Occurrences
Normal conditions	
Heatup and cooldown at 100°F/hr [a, b] (pressurizer cooldown 200°F/hr) [c]	200 (each)
Unit loading and unloading at 5% of full power/min	18,300 (each)
Step-load increase and decrease of 10% of full power	2000 (each)
Large step-load decrease	200
Steady-state fluctuations	Infinite
Upset conditions	
Loss of load, without immediate turbine or reactor trip [d]	80
Loss of power (blackout with natural circulation in the reactor coolant system) [e]	40
Loss of flow (partial loss of flow one pump only) [f]	80
Reactor trip from full power [g]	400
Inadvertent auxiliary spray [h]	10
Faulted conditions [i]	
Main reactor coolant pipe break	1
Steam pipe break	1
Design-basis earthquake	1
Test conditions	
Turbine roll test	10
Hydrostatic test conditions	
Primary side	5
Secondary side	5
Primary-side leak test	50

a. Heatup cycle—T_{avg} from ≤ 200°F to ≥ 550°F.
b. Cooldown cycle—T_{avg} from ≥ 550°F to ≤ 200°F.
c. Pressurizer cooldown cycle temperatures from ≥ 650°F to ≤ 200°F.
d. ≥ 15% of RATED THERMAL POWER to 0% of RATED THERMAL POWER.
e. Loss of offsite A.C. electrical power source supplying the onsite ESF Electrical System.
f. Loss of only one reactor coolant pump.
g. 100% to 0% of RATED THERMAL POWER. (Full Power Trip)
h. Spray water temperature differential > 320°F.
i. In accordance with the ASME Nuclear Power Plant Components Code, faulted conditions are not included in fatigue evaluations.

Table 5.2-5
STEAM GENERATOR PRIMARY/SECONDARY BOUNDARY COMPONENTS

Condition: Design Condition
Primary/Secondary Pressures = 2485/885 psig[a]
Primary Chamber Design Temperature 650°F
Secondary Chamber Design Temperature 600°F

Location (Figure 5.2-1)	Description	Stress Category	Maximum Stress Intensity (ksi)	Allowable Stress Limit (ksi)
2	Channel Head to Tubesheet	P_L	17.76	40.05
	Junction, in the Channel Head	P_L+P_b	43.13[b]	40.05
3	Channel Head to Tubesheet	P_L	16.82	45.00
	Junction, in the Tubesheet	P_L+P_b	48.10[b]	45.00
4	Tubesheet to Stub Barrel	P_L	15.06	40.05
	Junction	P_L+P_b	15.41	40.05

a. Based on 1600 psig Primary to Secondary Design Pressure Differential
b. Exceeds the allowable stress limit. A limit analysis was performed per N-417.6(b) of the ASME Code Section III.
Specified Primary Pressure = 2485 psig
2/3 Lower Bound Collapse Load (Primary Pressure) = 3390 psig
Secondary Pressure = 885 psi

Table 5.2-6
STEAM GENERATOR PRIMARY/SECONDARY BOUNDARY COMPONENTS

Condition: Primary Hydrotest
Primary Chamber Hydrotest Pressure 3107 psig
Secondary Chamber Hydrotest Pressure 0 psig
Test Temperature 70-250°F

Location (Figure 5.2-1)	Description	Stress Category	Maximum Stress Intensity (ksi)	Allowable Stress Limit (ksi)
2	Channel Head to Tubesheet	P_L	27.41	62.47
	Junction, in the Channel Head	P_L+P_b	67.21[a]	62.47
3	Channel Head to Tubesheet	P_L	28.03	82.42
	Junction, in the Tubesheet	P_L+P_b	75.82	82.42
4	Tubesheet to Stub Barrel	P_L	22.49	62.47
	Junction	P_L+P_b	42.50	62.47

a. Exceeds the allowable stress limit. A limit analysis was performed per N-417.6(b) of the ASME Code Section III.
Specified Primary Pressure = 3107 psig
2/3 Lower Bound Collapse Load (Primary Pressure) = 3400 psig
Secondary Pressure = 0 psi

Table 5.2-7
STEAM GENERATOR PRIMARY/SECONDARY BOUNDARY COMPONENTS

Condition: Secondary Hydrotest
Secondary Chamber Hydrotest Pressure 1357 psig
Primary Chamber Hydrotest Pressure 0 psig
Test Temperature 70-180°F

Location (Figure 5.2-1)	Description	Stress Category	Maximum Stress Intensity (ksi)	Allowable Stress Limit (ksi)
2	Channel Head to Tubesheet	P_L	9.20	62.47
	Junction, in the Channel Head	P_L+P_b	18.66	62.47
3	Channel Head to Tubesheet	P_L	10.00	82.42
	Junction, in the Tubesheet	P_L+P_b	21.63	82.42
4	Tubesheet to Stub Barrel	P_L	16.53	62.47
	Junction	P_L+P_b	49.12	62.47

Table 5.2-8
STEAM GENERATOR PRIMARY/SECONDARY BOUNDARY COMPONENTS

Condition: Faulted Condition, Loss of Secondary Side Pressure
Primary Chamber Pressure 2485 psig
Secondary Chamber Pressure 0 psig
Temperature 668°F

Location (Figure 5.2-1)	Description	Stress Category	Maximum Stress Intensity (ksi)	Allowable Stress Limit (ksi)
2	Channel Head to Tubesheet Junction, in the Channel Head	P_L	21.92	36.94
		P_L+P_b	53.76	55.41
3	Channel Head to Tubesheet Junction, in the Tubesheet	P_L	22.42	50.72
		P_L+P_b	60.64	76.08
4	Tubesheet to Stub Barrel Junction	P_L	17.99	36.94
		P_L+P_b	33.99	55.41

Table 5.2-9
STEAM GENERATOR PRIMARY/SECONDARY BOUNDARY COMPONENTS

Condition: Normal, Upset, and Test Conditions

Location (Figure 5.2-1)	Description	Maximum Fatigue Usage
2	Channel Head to Tubesheet Junction, in the Channel Head	0.03
3	Channel Head to Tubesheet Junction, in the Tubesheet	0.13
4	Tubesheet to Stub Barrel Junction	0.06

Table 5.2-10
STEAM GENERATOR PRIMARY/SECONDARY BOUNDARY COMPONENTS

Condition: Normal, Upset, and Test Conditions

Location (Figure 5.2-1)	Description	Maximum Fatigue Usage
1	Tubesheet Center	0.16

Table 5.2-11
STEAM GENERATOR PRIMARY/SECONDARY BOUNDARY COMPONENTS

Location: Tubesheet Center

Condition	Description	Stress Category	Maximum Stress Intensity (ksi)	Allowable Stress Limit (ksi)
Design Condition	2485 / 885 psig	P_m	9.92	30.00
	650 / 600°F	P_L+P_b	46.44[a]	45.00
Primary Hydrotest	3107 / 0 psig	P_m	10.28	54.95
	70 - 250°F	P_L+P_b	81.04	82.42
Secondary Hydrotest	0 / 1357 psig	P_m	2.64	54.95
	70 - 180°F	P_L+P_b	33.44	82.42
Faulted Condition	(Loss of Secondary Pressure)	P_m	8.22	50.72
		P_L+P_b	64.82	76.08

a. Exceeds the allowable stress limit. A limit analysis was performed per N-417.6 (b) of the ASME Code Section III.
Specified Primary Pressure = 2485 psig
2/3 Lower Bound Collapse Load (Primary Pressure) = 3390 psig
Secondary Pressure = 885 psi

Table 5.2-12
LIMIT ANALYSIS CALCULATIONS RESULTS

Case	Location	Limit Pressure
Hot:		
Primary/Secondary Pressure 2485/885 psi Temperature 650°F	Channel/Primary Shell Tubesheet/Secondary Shell Tubesheet Center	3185 psi
Cold Hydro: (Primary Hydrotest)		
Primary/Secondary Pressure 3107/0 psi Temperature 70°F	Channel/Primary Shell Tubesheet/Secondary Shell Tubesheet Center	3887 psi
Cold: (With Secondary Pressure)		
Primary/Secondary Pressure 3107/700 psi Temperature 70°F	Channel/Primary Shell Tubesheet/Secondary Shell Tubesheet Center	4401 psi
Hot Hydro:		
Primary/Secondary Pressure 2485/0 psi Temperature 400°F	Channel/Primary Shell Tubesheet/Secondary Shell Tubesheet Center	3354 psi

Table 5.2-13
LOAD COMBINATIONS AND OPERATING CONDITIONS

Load Combination	Operating Condition
Normal (deadweight, thermal, and pressure)	Normal
Normal and operating-basis earthquake	Upset
Normal and design-basis earthquake	Faulted
Normal and design-basis earthquake design-basis accident	Faulted

Table 5.2-14
LOADING CONDITIONS AND STRESS LIMITS: CLASS A COMPONENTS

Loading Conditions	Stress Intensity Limits	Note
Design condition	(a) $P_m \leq S_m$	
	(b) $P_L \leq 1.5\ S_m$	
	(c) P_m (or P_L) + $P_B \leq 1.5\ S_m$	1
Normal and Upset condition	(a) P_m (or P_L) + P_B + $Q \leq 3.0\ S_m$	2
	(b) Cumulative Fatigue Usage < 1.0	
Faulted condition	(a) $P_m \leq 1.2\ S_m$ or S_y, whichever is larger, $P_L \leq 1.5\ (1.2)\ S_m$ or $1.5\ S_y$, whichever is larger, and P_m (or P_L) + $P_B \leq 1.5\ (1.2)\ S_m$ or $1.5\ S_y$, whichever is larger, or	3
	(b) Faulted condition limits in Table 5.2-16	

Key: P_m= primary general membrane stress intensity
P_L = primary local membrane stress intensity
P_B = primary bending stress intensity
Q = secondary stress intensity
S_m = stress intensity value from ASME Code, Section III
S_y = minimum specified material yield from ASME Code, Section III, Table N-421 or equivalent.

Notes:

1. The limits on local membrane stress intensity ($P_L \leq 1.5\ S_m$) and primary membrane plus primary bending stress intensity (P_m (or P_L) +$P_B \leq 1.5\ S_m$) need not be satisfied at a specific location if it can be shown by means of limit analysis or by tests that the specified loadings do not exceed two-thirds of the lower bound collapse load per paragraph N-417.6(b) of the ASME Code, Section III.

2. In lieu of satisfying the specific requirements for local membrane ($P_L \leq 1.5\ S_m$) or the primary plus secondary stress intensity (P_m (or P_L) + P_B + $Q \leq 3\ S_m$) at a specific location, the structural action may be calculated on a plastic basis and the design will be considered to be acceptable if shakedown occurs, as opposed to continuing deformation, and if the deformations that occur before shakedown do not exceed specified limits per paragraph N-417.6(a)(2) of the ASME Code, Section III.

3. The limits on local membrane stress intensity ($P_L \leq 1.85\ S_m$ or $1.5\ S_y$) need not be satisfied at a specific location if it can be shown by means of limit analysis or by test that the specified loadings do not exceed 120% of two-thirds of the lower bound collapse load per paragraph N-417.10(c) of the ASME Code, Section III.

Table 5.2-15
LOADING CONDITIONS AND STRESS LIMITS: NUCLEAR POWER PIPING[a]

Loading Conditions	Stress Intensity Limits
Normal condition	(a) $P_m \leq S_m$
	(b) $P_L \leq 1.5\ S_m$
	(c) P_m (or P_L) + $P_B \leq 1.5\ S_m$
	(d) P_m (or P_L) + $P_B + P_e + Q \leq 3.0\ S_m$
	(e) $P_e \leq 3.0\ S_m$
Upset condition	(a) $P_m \leq S_m$
	(b) $P_L \leq 1.5\ S_m$
	(c) P_m (or P_L) + $P_B \leq 1.5\ S_m$
	(d) P_m (or P_L) + $P_B + P_e + Q \leq 3.0\ S_m$
	(e) $P_e \leq 3.0\ S_m$
Faulted condition	Faulted condition limits as shown in Table 5.2-16

Key: P_m = primary general membrane stress intensity
P_L = primary local membrane stress intensity
P_B = primary bending stress intensity
P_e = secondary expansion stress intensity
Q = secondary membrane plus bending stress intensity
S_m = allowable stress intensity from USAS B31.7 Code for Nuclear Power Piping

a. Alternatively, the rules and simplified analysis of Divisions I-704 and I-705 with the stress limits defined by Code Case 70 of USAS B31.7 may be used in lieu of these equations.

Table 5.2-16
FAULTED CONDITION STRESS LIMITS FOR CLASS A COMPONENTS

System (or Subsystem) Analysis	Component Analysis	Stress Limits for Components		Test
		P_m	$P_m + P_b$	
Elastic	Elastic	Smaller of 2.4 S_m and 0.70 S_u	Smaller of 3.6 S_m and 1.05 S_u[a]	
	Plastic[b]	Larger of 0.70 S_u or S_y + 1/3 (S_u - S_y)	Larger of 0.70 S_{ut} or S_y + 1/3 (S_{ut} - S_y)	0.8 L_T (b)
	Limit analysis	0.9 L_1	(b) (d)	(c)
Plastic	Plastic or elastic	Larger of 0.70 S_u or S_y + 1/3 (S_u - S_y)	Larger of 0.70 S_{ut} or S_y + 1/3 (S_{ut} - S_y)	

Key: S_y= yield stress at temperature
S_u= ultimate stress from engineering stress-strain curve at temperature
S_{ut}= ultimate stress from true stress-strain curve at temperature
S_m= stress intensity from ASME Code Section III, at temperature

a. These limits are based on a bending shape factor of 1.5 for simple bending; for cases with different shape factors, the limits will be changed proportionally.
b. When elastic system analysis is performed, the effect of component deformation on the dynamic system response should be checked.
c. L_T = The limits established for the analysis, etc. The limits established for the analysis need not be satisfied if it can be shown from the test of a prototype or model that the specified loads (dynamic or static equivalent) do not exceed 80% of L_T, where L_T is the ultimate load or load combination used in the test. In using this method, account shall be taken of the similitude relationships that may exist between the actual component and the tested models to ensure that the loads obtained from the test are a conservative representation of the load carrying capability of the actual component under postulated loading for faulted conditions.
d. L_1 = lower bound limit load with an assumed yield point equal to 2.3 S_m.

Table 5.2-17
FAULTED CONDITION LOADS FOR THE REACTOR COOLANT PUMP FEET

	F_x	F_y	F_z	M_x[a]	M_y[a]	M_z[a]
W Umbrella	±3305	±3400	±2605	±7059	±4010	±7083
Case 1[b]	-	390	294	-	-	-
Case 2[b]	-	521	330	-	-	-
Case 3[b]	-	959	376	-	-	-
Case 4[b]	-	527	326	-	-	-

a. No moments are transmitted to the pump feed due to the specific design of the supports.
b. These four cases represent the largest loading conditions on pump feet.

Case 1: Deadweight + Thermal + Internal Pressure + SRSS (SSE & main steam line break)
Case 2: Deadweight + Thermal + Internal Pressure + SRSS (SSE & residual heat removal line break)
Case 3: Deadweight + Thermal + Internal Pressure + SRSS (SSE & accumulator / safety injection line break)
Case 4: Deadweight + Thermal + Internal Pressure + SRSS (SSE & pressurizer surge line break)

Table 5.2-18
OPERATING AND INACTIVE VALVES IN THE REACTOR COOLANT SYSTEM BOUNDARY

Line	Valve	Type[a]	Normal Position	Post-LOCA Position
RHR suction	1. Motor gate	I	Closed (interlocked with RCS pressure)	Closed
	2. Motor gate	I	Closed (interlocked with RCS pressure)	Closed
Loop drains (each loop)	1. Manual globe	I	Closed	Closed
	2. Air-op globe		Closed	Closed
Charging	1. Check	O	Open	Closed
	2. Air-op globe	O	Open	Closed
RHR return (each of two loops)	1. Check	O	Closed	Open - for accumulator injection
	2. Motor gate	I	Closed	Closed
Accumulator	1. Check	O	Closed	Open - for accumulator injection
	2. Check	O	Closed	Open - for accumulator injection
SIS - boron injection tank (each loop)	1. Check	O	Closed	Open - for boron high-head and low-head injection
	2. Check	O	Closed	Open - for boron and high-head injection
Hot-leg connections (each loop)	1. Check	O	Closed	Open - for hot-leg recirculation
	2. Manual globe	I	Open	Open
	3. Check	O	Closed	Open - for hot-leg recirculation
Excess letdown	1. Air-op globe	O[b]	Closed (fail close)	Closed
Letdown	1. Manual globe	I	Open	Open
	2. Air-op globe	O	Open (fail close)	Closed - on low pressurizer level signal
	3. Air-op globe	O	Open (fail close)	Closed - on low pressurizer level signal
Low-head injection	1. Check	O	Closed	Open - for low-head injection and recirculation
	2. Check	O	Closed	Open - for low-head injection and recirculation

a. O = operating; I = inactive.
b. There is a possibility for these valves to be open when the accident occurs

Table 5.2-18 (continued)

OPERATING AND INACTIVE VALVES IN THE REACTOR COOLANT SYSTEM BOUNDARY

Line	Valve	Type[a]	Normal Position	Post-LOCA Position
Pressurizer relief valves (to PRT)	1. Motor gate	I	Open	Open
	2. Air-op globe	I	Closed (fail close)	Closed (fail close)
Pressurizer safety valves (to PRT)	1. Safety valve	O	Closed	Closed
Auxiliary spray (from CVCS)	1. Check	O[b]	Closed	Closed
	2. Air-op globe	O[b]	Closed (fail close)	Closed

a. O = operating; I = inactive.

b. There is a possibility for these valves to be open when the accident occurs.

Table 5.2-19
ACTIVE VALVES IN THE REACTOR COOLANT PRESSURE BOUNDARY

Mark Number [a]	Valve Function	Active Position	Design Condition	Operating Condition	Functional Tests [b]	Assurance of Active Function
1-CH-LCV-1460A, B	Letdown line	Closed	2485 psig 650°F	2235 psig 533°F	(c)	Fails closed (d)
1-CH-HCV-1200A, B, C	Letdown line orifice isolation	Closed	2485 psig 650°F	300 psig 290°F	(c)	Fails closed and closes on SI signal
1-CH-TV-1204A, B	Letdown line containment isolation	Closed	600 psig 400°F	300 psig 290°F	(c)	Fails closed and closes on SI signal
1-CH-MOV-1380 and 1381	Seal return isolation	Closed	200 psig 250°F	50 psig 170°F	(e)	Closes on CIA signal
1-CH-MOV-1289A	Charging isolation	Closed	2485 psig 650°F	2485 psig 130°F	(e)	Closes on SI signal (d)
1-SI-MOV-1867C, D	Boron injection tank containment isolation	Open	2485 psig 650°F	2485 psig 180°F	(e)	Opens on SI signal (d)
1-SI-MOV-1869A, B	Hot leg isolation	Open	2485 psig 650°F	2485 psig 180°F	(e)	Opened manually for recirculation
1-SI-MOV-1836	Cold leg isolation	Open	2485 psig 650°F	2485 psig 180°F	(e)	Opened manually for recirculation
1-SI-MOV-1890C, D	LHSI cold leg isolation	Closed	2485 psig 650°F	100 psig 180°F	(e)	Closed manually for recirculation
1-SI-MOV-1890A, B	LHSI hot leg isolation	Open	2485 psig 650°F	100 psig 180°F	(e)	Opened manually for recirculation

a. Unit 1 equipment is listed. Unit 2 equipment is similar.
b. Performed by manufacturer.
c. Shell hydrostatic, seat leakage (done with zero pressure on air operator for fail-closed valves), and backseat leakage.
d. Valves that automatically operate on SI or containment isolation phase A (CIA) signal are redundant to ensure completion of function.
e. Shell hydrostatic, seat leakage, backseat leakage.

Table 5.2-20
RT_{PTS} VALUES FOR NORTH ANNA UNIT 1 [a]

Vessel Material	50.3 EFPY RT_{PTS} Values (°F)	Screening Criteria (°F)
Forging 03 (Lower Shell Forging)	190.9	270
Forging 04 (Intermediate Shell Forging)	174.3	270
Forging 05 (Nozzle Shell Forging)	145.7	270
Weld 04 (Intermediate to Lower Shell Weld)	155.6	300
Weld 05A (Nozzle to Intermediate Shell; OD 94%)	132.8	300
Weld 05B (Nozzle to Intermediate Shell; ID 6%)	120.8	300

a. References 17 and 26.

Note: This table reflects results for a cumulative core burnup of 50.3 EFPY which corresponds to the estimated cumulative core burnup at the end of the 60-year license period assuming a 90% capacity factor for cycles beyond Cycle 10.

Table 5.2-21
RT_{PTS} VALUES FOR NORTH ANNA UNIT 2 [a]

Vessel Material	52.3 EFPY RT_{PTS} Value (°F)	Screening Criteria (°F)
Forging 03 (Lower Shell Forging)	227.7	270
Forging 04 (Intermediate Shell Forging)	186.6	270
Forging 05 (Nozzle Shell Forging)	106.8	270
Weld 04 (Intermediate to Lower Shell Weld)	18.5	300
Weld 05A (Nozzle to Intermediate Shell; OD 94%)	123.4	300
Weld 05B (Nozzle to Intermediate Shell; ID 6%)	118.5	300

a. References 18 and 26.

Note: This table reflects results for a cumulative core burnup of 52.3 EFPY which corresponds to the estimated cumulative core burnup at the end of the 60-year license period assuming a 90% capacity factor for cycles beyond Cycle 10.

Table 5.2-22
REACTOR COOLANT PRESSURE BOUNDARY MATERIALS

Component	Type
Reactor vessel components	
Shell and lower head plates (other than core region)	SA-533 Grade A, B, or C; Class 1 or 2 (vacuum treated)
Shell, flange and nozzle forgings	SA-508 Class 2 or 3
Nozzle safe ends	SA-182 Type F304 or F316 weld buildup
Closure head dome	16 MND 5 (RCC-M Spec. M2122) (ASME Equivalent Material SA-533 Type B Class 1)
Closure head flange	16 MND 5 (RCC-M Spec. M2113) (ASME Equivalent Material SA-508 Grade 3 Class 1)
CRDM nozzle adapters	Z2 CN 19-10 (RCC-M Spec. M3301) (ASME Equivalent Material SA-182 F304)
CRDM sleeves	NC 30 Fe (RCC-M Spec. M4108) (ASME Equivalent Material SB-167 UNS N06690, Alloy 690)
CRDM nozzle plug	SA-182 Grade F304
Vent pipe nozzle	NC 30 Fe (RCC-M Spec. M4109) (ASME Equivalent Material SB-166 UNS N06690, Alloy 690
Closure head NC Fe welding materials	INCO ALLOY 152 (ASME Equivalent Material SFA-5.11 Code Case 2143-1, UNS W86152) INCO ALLOY 52 (ASME Equivalent Material SFA-5.14, Code Case 2142-1, UNS N06052)
Instrument tube appurtenances - lower head	SA-182 Type F304, F304L or F316 (safe ends) Alloy 600 ASME SB-166
Closure studs, nuts, and washers	SA-540 Class 3 Grade B23 or B24
Core support pads	SB-166 with carbon less than 0.10%
Monitor tubes	SA-312 Type 304
Vessel supports, seal ledge	SA-516 Grade 70 quenched and tempered or SA-533 Grade A, B, or C: Class 1 or 2 (vessel supports may be of weld metal buildup of equivalent strength)
Cladding (Closure Head)	1st layer SS Type ER309L and SS Type ER308L for subsequent layers
Cladding other than Closure Head	Stainless steel weld metal analysis A-7 and Ni-Cr-Fe weld metal F-Number 43

Table 5.2-22 (continued)
REACTOR COOLANT PRESSURE BOUNDARY MATERIALS

Component	Type
Reactor vessel components (continued)	
Head lifting lugs	18 MND 5 (RCC-M Spec. M2125) (ASME Equivalent Material SA-533 Type B Class 1)
Steam generator components (Unit 1 and Unit 2 Replacement)	
Lower assembly shell	ASME SA-508, Class 3 Forging
Transition cone (below girth weld)	ASME SA-508, Class 3 Forging
Transition cone (above girth weld) and Upper Assembly Shell	ASME SA-533, Grade A Class 1 Plate
Tubesheet	ASME-SA-508, Class 3 Forging
Channel head	ASME SA-508, Class 3 Forging
Support plates	ASME SA-240, Type 405
Channel head cladding	ASME SFA-5.4, Class E309L (1st Layer) ASME SFA-5.4, Class E308L (Remaining Layers)
Tubesheet Cladding	ASME SFA-5.14, Class ERNiCr-3
Tubes	ASME SB-163, Alloy 690 TT
Primary Nozzle Safe Ends	ASME SA-336, Class F316LN Forgings
Closure bolting	**Primary side**: Studs: ASME SA-193 Gr. B7 Nuts: ASME SA-194 Gr. 7 (16 each per manway - specially designed for use with hydraulic stud tensioner) **Secondary Side**: Heavy Hex Bolts: ASME SA-193 Gr. B7 or ASTM A-193 Gr. B7 (20 each per manway)
Pressurizer components	
Pressure plates	SA 533 Grade A, B, or C; Class 1 or 2
Pressure forgings	SA 508 Class 2 or 3
Nozzle safe ends	SA 182 or 376 Type F316 or 316L and Ni-Cr-Fe weld metal F-Number 43
Cladding	Stainless steel weld metal analysis A-7 and Ni-Cr-Fe weld metal F-Number 43

Table 5.2-22 (continued)
REACTOR COOLANT PRESSURE BOUNDARY MATERIALS

Component	Type
Pressurizer components (continued)	
Closure bolting	ASTM A193 Gr. B7 Studs with ASTM A194 Gr. 7 or 2H Heavy-Hex Nuts OR ASTM A193 Gr. B7 Bolts
Pressurizer safety valve forgings	SA 182 Type F316 or F347
Reactor coolant stop valves	
Body and bonnet	SA 351 Grade CF8M
Stem	SA 564 Grade 630 cond 1100°F heat treatment
Closure bolting and nuts	SA 540 Grade B24 SA/ASTM-A-194 Grade 2H, SA/ASTM-A-194 Grade 7
Reactor coolant pump	
Pressure forgings	SA 182 Type 304, 316, or 348
Pressure casting	SA 351 Grade CF8, CF8A, or CF8M
Tube and pipe	SA 213, SA 376, or SA 312 - seamless Type 304 or 316
Pressure plates	SA 240 Type 304 or 316
Bar material	SA 479 Type 304 or 316
Closure bolting	SA 193 Grade B7 or B8 SA 540 Grade B23 or 24 SA 453 Grade 660
Flywheel	SA 533 Grade B, Class 1
Reactor coolant piping	
Reactor coolant pipe	Code Case 1423-1 Grade F302N or 316N, or SA 351 Grade CF8A or CF8M centrifugal castings
Reactor coolant fittings	SA 351 Grade CF8A or CF8M
Branch nozzles	SA 182 Grade F304 or 316 or Code Case 1423-1 Grade F304N or 316N
Surge line and loop bypass	SA 376 Type 304 or 316 or Code Case 1423-1 Grade F304N or 316N

Table 5.2-22 (continued)
REACTOR COOLANT PRESSURE BOUNDARY MATERIALS

Component	Type
Reactor coolant piping (continued)	
Auxiliary piping 0.5 inch through 12 inches and wall schedules 40S through 80S (ahead of second isolation valve)	ANSI B36.19
All other auxiliary piping (ahead of second isolation valve)	ANSI B36.10
Socket weld fittings	ANSI B16.11
Piping flanges	ANSI B16.5
Auxiliary piping valves (Class I)	SA 182 Type 304 or 316 or SA 351 Grade CF8, CF8A, or CF8M
Welding materials	SFA 5.4 and 5.9 Type 308 or 308L
Control rod drive mechanism	
Pressure housing	SA 182 Grade F304 or SA 351 Grade CF8
Pressure forgings	SA 182 Grade F304 or SA 336 Grade F8
Bar material	SA 479 Type 304
Welding materials	SFA 5.4 and 5.9 Type 308 or 308L
Part-length mechanism	
Pressure housing	SA 182 or SA 312 seamless Grade 304 and Code Case 1337-5 AISI 403 CRES tempered at 1125±25°F may be used in the motor section of the pressure housing, provided it is welded to F-304 end members.
Bar material	SA 479 Type 304
Welding materials	SFA 5.4 and 5.9 Type 309 or 308L

Table 5.2-23
REACTOR COOLANT PRESSURE BOUNDARY
MATERIALS AUXILIARY COMPONENTS

Component	Type
Motor- and Manual-Operated Gate and Check Valves	
Bodies, bonnets, and disks	SA 182 Grade F316
Stems	SA 564 Type 630 cond. 1,100°F heat treatment
Closure bolting and nuts	SA 453 Grade 660 and SA 194 Grade B6
Air-Operated Valves	
Bodies and bonnets	SA 182 Type F316 or SA 351 Grade CF8 or CF8M
Disks and stems	SA 182 Type F316 or SA 564 Grade 630 cond. 1,100°F heat treatment
Closure bolting and nuts	SA 453 Grade 660 and SA 194 Grade B6
Auxiliary Relief Valves	
Forgings	SA 182 Type F316
Disk	SA 479 Type 316
Miscellaneous Valves (2 in. and smaller)	
Bodies and bonnets	SA 479 Type 316 or SA 351 Grade CF8
Disks	SA 479 Type 316
Stems	SA 479 Type 410 or Type 304
Closure bolting and nuts	SA 453 Grade 660 and SA 193 Grade B6
Auxiliary Heat Exchangers	
Heads	SA 182 Grade F304 or SA 240 Type 304 or 316
Flanges	SA 182 Grade F304 or F316
Flange necks	SA 182 Grade F304 or SA 240 Type 316 or SA 312 Type 304 seamless
Tubes	SA 213 Type 304
Tubesheets	SA 240 Type 304 or 316 or SA 182 Grade F304 or SA 515 Grade 70 with stainless steel weld metal analysis A-7 cladding
Shells	SA 351 Grade CF8
Pipe	SA 312 Type 304 seamless

Table 5.2-23 (continued)
REACTOR COOLANT PRESSURE BOUNDARY
MATERIALS AUXILIARY COMPONENTS

Component	Type
Auxiliary Pressure Vessels, Tanks, Filters, etc.	
Shells and heads	SA 240 Type 304 or SA 264 Type 304 clad to SA 516 Grade 70 or SA 516 Grade 70 with stainless steel weld metal analysis A-7 cladding
Flanges and nozzles	SA 182 Grade F304 and SA 105 or SA 350 Grade LF2 with stainless steel weld metal analysis A-7 cladding
Piping	SA 312 Type 304 or Type 316 seamless
Pipe fittings	SA 403 WP304 seamless
Closure bolting and nuts	SA 193 Grade B7 or B8 and SA 194 Grade 2H, ASTM A-193 Grade B7 or B16, ASTM A-194 Grade 2H or 7
Auxiliary Pumps	
Pump casing and heads	SA 351 Grade CF8 or CF8M, SA 182 Grade F304 or F316
Flanges and nozzles	SA 182 Grade F304 or F316, SA 403 Grade WPS316L seamless
Piping	SA 312 Type 304 or Type 316 seamless
Stuffing or packing box cover	SA 351 Grade CF8 or CF8M, SA 240 Type 304 or Type 316
Pipe fittings	SA 403 Grade WP316L seamless
Closure bolting and nuts	SA 193 Grade B6, B7, or B8M and SA 194 Grade 2H or Grade 8M

Table 5.2-24
REACTOR VESSEL INTERNALS FOR EMERGENCY CORE COOLING

Component	Type
Forgings	SA 182 Type F304
Plates	SA 240 Type 304
Pipes	SA 312 Type 304 seamless or SA 376 Type 304
Tubes	SA 213 Type 304
Bars	SA 479 Type 304 and 410
Castings	SA 351 Grade CF8 or CF8A
Bolting	SA pending Westinghouse PF Spec 70041EA
Nuts	SA 193 Grade B-8
Locking devices	SA 479 Type 304
Weld buttering	Stainless steel weld metal analysis A-7

Table 5.2-25
REACTOR COOLANT WATER CHEMISTRY SPECIFICATION

Parameter	Limit
Electrical conductivity	Dependent on the concentration of boric acid and alkali present. Expected range is less than 1 to 40 mhos/cm at 25°C.
Solution pH	Dependent on the concentration of boric acid and alkali present. Expected values range between 4.2 (high boric acid concentration) to 10.5 (low boric acid concentration) at 25°C.
Oxygen, maximum(1)	0.1 ppm
Chloride, maximum	0.15 ppm
Fluoride, maximum	0.15 ppm
Hydrogen(2) (3)	25 to 50 cc(STP)/kg H_2O
Suspended solids, maximum	0.200 ppm
pH control agent (Li^7OH)	(4)
Boric acid, ppm B	Variable from 0 to approximately 4000 ppm

1. Limit not applicable with $T_{ave} \leq 250°F$
2. To assist reactor coolant regasing, the reactor coolant dissolved hydrogen concentration may range between 15 to 50 cc/kg within 24 hours prior to shutdown
3. Due to the effects of dilution during start-up, the reactor coolant hydrogen concentration may range between 15 to 50 cc/kg for 24 hours following reactor criticality.
4. Determined by high temperature pH with concentration decreasing from approximately 3.5 ppm (as Li) at a RCS boron concentration of 2000 ppm until reaching end-of-life cycle.

The following information is HISTORICAL and is not intended or expected to be updated for the life of the plant.

Table 5.2-26

PRE-IRRADIATION REACTOR VESSEL TOUGHNESS TABLE (UNIT 1)

						Minimum Temperature (°F) for 50 ft-lb			Average Upper Shelf (ft-lb)	
Component	Heat No.	Material Type	CU (%)	P (%)	NDTT (°F)	Parallel to Major Working Direction	Normal to Major Working Direction	RT_{NDT} (°F)	Parallel to Major Working Direction[a]	Normal to Major Working Direction
Closure head dome	7094	A533,B,Cl.1 RCC-M 16MND5 (M2122)			-31			-31		
Closure head flange	E4483 - E4484	A508,GR.3, CL.1 RCC-M 16MND5 (M2113)			-76			-76		
Vessel flange	4982	A508,Cl.2			-22	-70	-50[b]	-22	161	
Inlet nozzle	4964	A508,Cl.2			-31	14	34[b]	-26	106	
Inlet nozzle	4966	A508,Cl.2			-22	10	30[b]	-22	88	
Inlet nozzle	4968	A508, Cl.2			-22	43	63[b]	3	80	
Outlet nozzle	4963	A508,Cl.2			-13	43	63[b]	-3	100	
Outlet nozzle	4965	A508,Cl.2			-22	14	34[b]	-22	90	
Outlet nozzle	4967	A508,Cl.2			-4	34	54[b]	-4	90	
Upper shell	4952	A508,Cl.2			2	46	66[b]	6	60	

a. Minimum energy at highest test temperature (68°F) -% shear not reported.
b. Estimated temperature based on NRC Regulatory Standard Review Plan, Branch Technical Position MTEB 5-2

The following information is HISTORICAL and is not intended or expected to be updated for the life of the plant.

Table 5.2-26 (continued)

PRE-IRRADIATION REACTOR VESSEL TOUGHNESS TABLE (UNIT 1)

						Minimum Temperature (°F) for 50 ft-lb			Average Upper Shelf (ft-lb)	
Component	Heat No.	Material Type	CU (%)	P (%)	NDTT (°F)	Parallel to Major Working Direction	Normal to Major Working Direction	RT_{NDT} (°F)	Parallel to Major Working Direction[a]	Normal to Major Working Direction
Intermediate shell	4958	A508,Cl.2	0.12	0.009	-31	20	77[c]	17[c]	94	92[c]
Lower shell	4979	A508,Cl.2	0.16	0.019	-13	40	98[c]	38[c]	74	85[c]
Bottom head segment	53647-3	A533,B, Cl.1			-31	27	47[b]	-13	65.5	
Bottom head segment	53648-4	A533,B,Cl.1			-13	27	47[b]	-13	77	
Bottom head dome	53774	A533,B, Cl.1			-22	32	52[b]	-8	67	
Weld		Weld	0.086	0.020	-13		79	19		102
Heat-affected zone		HAZ			-22		39	-21		142

a. Minimum energy at highest test temperature (68°F) -% shear not reported.
b. Estimated temperature based on NRC Regulatory Standard Review Plan, Branch Technical Position MTEB 5-2
c. Average transverse data obtained from surveillance program.

The following information is HISTORICAL and is not intended or expected to be updated for the life of the plant.

Table 5.2-27

PRE-IRRADIATION REACTOR VESSEL TOUGHNESS TABLE (UNIT 2)

Component	Heat No.	Material Type	CU (%)	P (%)	NDTT (°F)	Minimum Temperature (°F) for 50 ft-lb: Parallel to Major Working Direction	Minimum Temperature (°F) for 50 ft-lb: Normal to Major Working Direction	RT_{NDT} (°F)	Average Upper Shelf (ft-lb): Parallel to Major Working Direction[a]	Average Upper Shelf (ft-lb): Normal to Major Working Direction
Closure head dome	7538	A533,B, Cl.1 RCC-M 16MND5 (M2122)			-22			-22		
Head flange	H1681 - H1682	A508, Grade 3,Cl.1 RCC-M 16MND5 (M2113)			-49			-49		
Vessel flange	523000	A508,Cl.2			-22	-41	-21[b]	-22	146	
Inlet nozzle	990426	A508,Cl.2			-40	60	80[b]	20	72	
Inlet nozzle	54567-2	A508,Cl.2			-31	53	73[b]	13	118	
Inlet nozzle	54590-2	A508,Cl.2			-31	19	39[b]	-21	92	
Outlet nozzle	990426-22	A508,Cl.2			-13	41	61[b]	1	80	
Outlet nozzle	990426-3	A508,Cl.2			-31	43	63[b]	3	62	
Outlet nozzle	791291	A508,Cl.2			-22	21	41[b]	-19	115	

a. Average energy at highest test temperature (68°F) -% shear not reported.
b. Estimated temperature based on NRC Regulatory Standard Review Plan, Branch Technical Position MTEB 5-2

The following information is HISTORICAL and is not intended or expected to be updated for the life of the plant.

Table 5.2-27 (continued)

PRE-IRRADIATION REACTOR VESSEL TOUGHNESS TABLE (UNIT 2)

Component	Heat No.	Material Type	CU (%)	P (%)	NDTT (°F)	Minimum Temperature (°F) for 50 ft-lb: Parallel to Major Working Direction	Minimum Temperature (°F) for 50 ft-lb: Normal to Major Working Direction	RT_{NDT} (°F)	Average Upper Shelf (ft-lb): Parallel to Major Working Direction[a]	Average Upper Shelf (ft-lb): Normal to Major Working Direction
Upper shell	990598 291396	A508,Cl.2	0.08	0.010	+5	49	69[b]	9	86	
Intermediate shell	990496 292429	A508,Cl.2	0.09	0.010	-49	49	135[c]	75[c]	85	74[c]
Lower shell	990533 207355	A508,Cl.2	0.13	0.013	-13	31	116[c]	56[c]	92	80[c]
Bottom head segment	53648-1	A533,B, Cl.1			-22	-9	11[b]	-22	94	
Bottom head segment	53648-4	A533,B,Cl.1			-13	31	51[b]	-6	77	
Bottom head dome	53695-1	A533,B,Cl.1			-40	21	41[b]	-19	87	
Weld		Weld	0.088	0.017	-67		12	-48		107
Heat affected zone					-49		-20	-49		125

a. Average energy at highest test temperature (68°F) -% shear not reported.
b. Estimated temperature based on NRC Regulatory Standard Review Plan, Branch Technical Position MTEB 5-2
c. Average transverse data obtained from surveillance program.

The following information is HISTORICAL and is not intended or expected to be updated for the life of the plant.

Table 5.2-28
PRESERVICE INSPECTION PROGRAM

Item Number	Category	Parts To Be Examined	Summer 1975
		Reactor Vessel	
B1.1	B-A	Longitudinal and circumferential shell welds in core region	UT
B1.2	A-B	Longitudinal and circumferential welds in shell and meridianal and circumferential seam welds in bottom and closure head	UT
B1.3	B-C	Vessel-to-flange and head-to-flange circumferential welds	UT
B1.4	B-D	Primary nozzle-to-vessel welds and nozzle inside radiused section	UT
B1.5	B-E	Vessel penetrations, including control rod drive and instrumentation penetrations	V(IWA 5000)
B1.6	B-F	Nozzle-to-safe-end welds	UT, S
B1.7	B-G-1	Closure studs, in place	UT
B1.8	B-G-1	Closure studs and nuts, when removed	UT, S
B1.9	B-G-1	Ligaments between threaded stud holes	UT
B1.10	B-G-1	Closure washers, bushings	V
B1.11	B-G-2	Pressure-retaining bolting	V
B1.12	B-H	Integrally welded vessel support	UT
B1.13	B-I-1	Closure head cladding	UT or V&S
B1.14	B-I-1	Vessel cladding	V
B1.15	B-N-1	Vessel interior	V
B1.16	B-N-2	Interior attachments and core support structures	V
B1.17	B-N-3	Core support structures	V
B1.18	B-O	Control rod drive housing	UT
B1.19	B-P	Exempted components	V(IWA 5000)

The following information is HISTORICAL and is not intended or expected to be updated for the life of the plant.

Table 5.2-28 (continued)
PRESERVICE INSPECTION PROGRAM

Item Number	Category	Parts To Be Examined	Summer 1975
		Heat Exchangers and Steam Generators	
B3.1	B-B	Longitudinal and circumferential welds, including tubesheet-to-head or tubesheet-to- shell welds on primary side	UT
B3.2	B-D	Primary nozzle-to-vessel head welds and nozzle-to-head inside radiused section [a]	
B3.3	B-F	Nozzle-to-safe-end welds	UT, S
B3.5 & 3.6	B-G-1	Pressure-retaining bolting	UT, S, V
B3.10	B-G-2	Pressure-retaining bolting	V
B3.7	B-H	Integrally welded vessel supports [b]	
B3.8	B-I-2	Vessel cladding	V
		Replacement Steam Generators	
Unit 1			Summer 1983
B2.40	B-B	Tubesheet-to-head and tubesheet-to-shell welds	UT
B3.140	B-D	Nozzle inside radius section	UT
B5.70	B-F	Nozzle-to-safe end welds	UT, S
B5.130	B-F	Dissimilar metal butt welds	UT, S
B7.30	B-G-2	Pressure retaining bolting	V
B16.20	B-Q	Steam generator tubing	ET
Unit 2			1986
B2.40	B-B	Tubesheet-to-head and tubesheet-to-shell welds	UT
B3.140	B-D	Nozzle inside radius section	UT
B5.70	B-F	Nozzle-to-safe end welds	UT, S
B5.130	B-F	Dissimilar metal butt welds	UT, S
B7.30	B-G-2	Pressure retaining bolting	V
B16.20	B-Q	Steam generator tubing	ET

a. Not applicable - nozzles are cast with head and therefore UT is not feasible on inside radiused section.
b. Not applicable - supports cast with head.

The following information is HISTORICAL and is not intended or expected to be updated for the life of the plant.

Table 5.2-28 (continued)
PRESERVICE INSPECTION PROGRAM

Item Number	Category	Parts To Be Examined	Summer 1975
		Pump Pressure Boundary	
B5.6	B-L-1	Pump casing welds [c]	UT
B5.7	B-L-2	Pump casing	V
B5.2 & 5.3	B-G-1	Pressure retaining bolting	UT, S, V
B5.9	B-G-2	Pressure retaining bolting	V
B5.4	B-K-1	Integrally welded supports [d]	UT
B5.5	B-K-2	Supports components	V
		Piping Pressure Boundary	
B4.1	B-F	Safe-end to piping welds and safe-ends in branch piping welds [e]	UT, S
B4.2	J-1	Circumferential and longitudinal pipe welds and branch connections greater than 4 in. diameter	UT, V
B4.7	J-2	Circumferential and longitudinal pipe welds and branch connection welds	V
B4.8	J-1	Socket welds and pipe branch connection diameter less than or equal to 4 in.	V, S
B4.3 & B4.4	B-G-1	Pressure-retaining bolting	UT, S, V
B4.12	B-G-2	Pressure-retaining bolting	V
B4.9	B-K-1	Integrally welded supports	UT
B4.10	B-K-2	Support components	V

c. Use shop radiographs.
d. A UT on integrally welded supports is not feasible at this time.
e. Safe-ends in branch piping welds are not applicable to North Anna.

The following information is HISTORICAL and is not intended or expected to be updated for the life of the plant.

Table 5.2-28 (continued)
PRESERVICE INSPECTION PROGRAM

Item Number	Category	Parts To Be Examined	Summer 1975
		Valve Pressure Boundary	
B6.6	B-M-1	Valve body welds [f]	
B6.7	B-M-2	Valve bodies	V
B6.2 & B6.3	B-G-1	Pressure-retaining bolting	UT, S, V
B6.9	B-G-2	Pressure-retaining bolting	V
B6.4	B-K-1	Integrally welded supports [g]	
B6.5	B-K-2	Support components	V
		Pressurizer	
B2.1	B-B	Longitudinal and circumferential welds	UT
B2.2	B-D	Nozzle-to-vessel welds and nozzle-to-vessel inside radiused section [h]	UT
B2.3	B-E	Heater penetrations [i]	V
B2.4	B-F	Nozzle-to-safe-end welds	UT, S
B2.5	B-G-1	Pressure-retaining bolting [j]	
B2.11	B-G-2	Pressure-retaining bolting	V
B2.8	B-H	Integrally welded vessel supports	UT
B2.9	B-I-2	Vessel cladding	V
B2.10	B-P	Exempted components [i]	V

f. There are no valve body welds at North Anna.
g. There are no integrally welded valve supports at North Anna.
h. The nozzle-to-vessel inside radiused section examination is not feasible at this time
i. IWA-5000
j. Pressure-retaining bolting (B-G-1) is not applicable to North Anna.

Figure 5.2-1
PRIMARY-SECONDARY BOUNDARY COMPONENTS
SHELL LOCATIONS OF STRESS INVESTIGATIONS

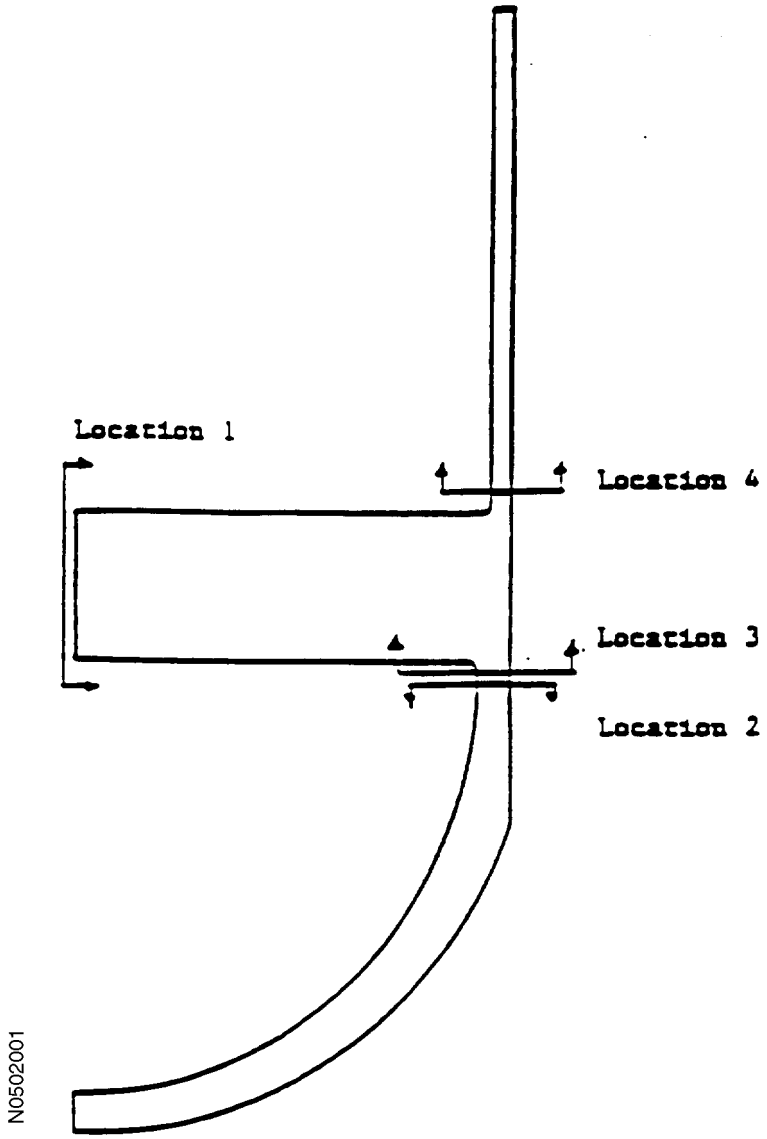

Figure 5.2-2
REACTOR COOLANT PUMP CASING WITH SUPPORT FEET

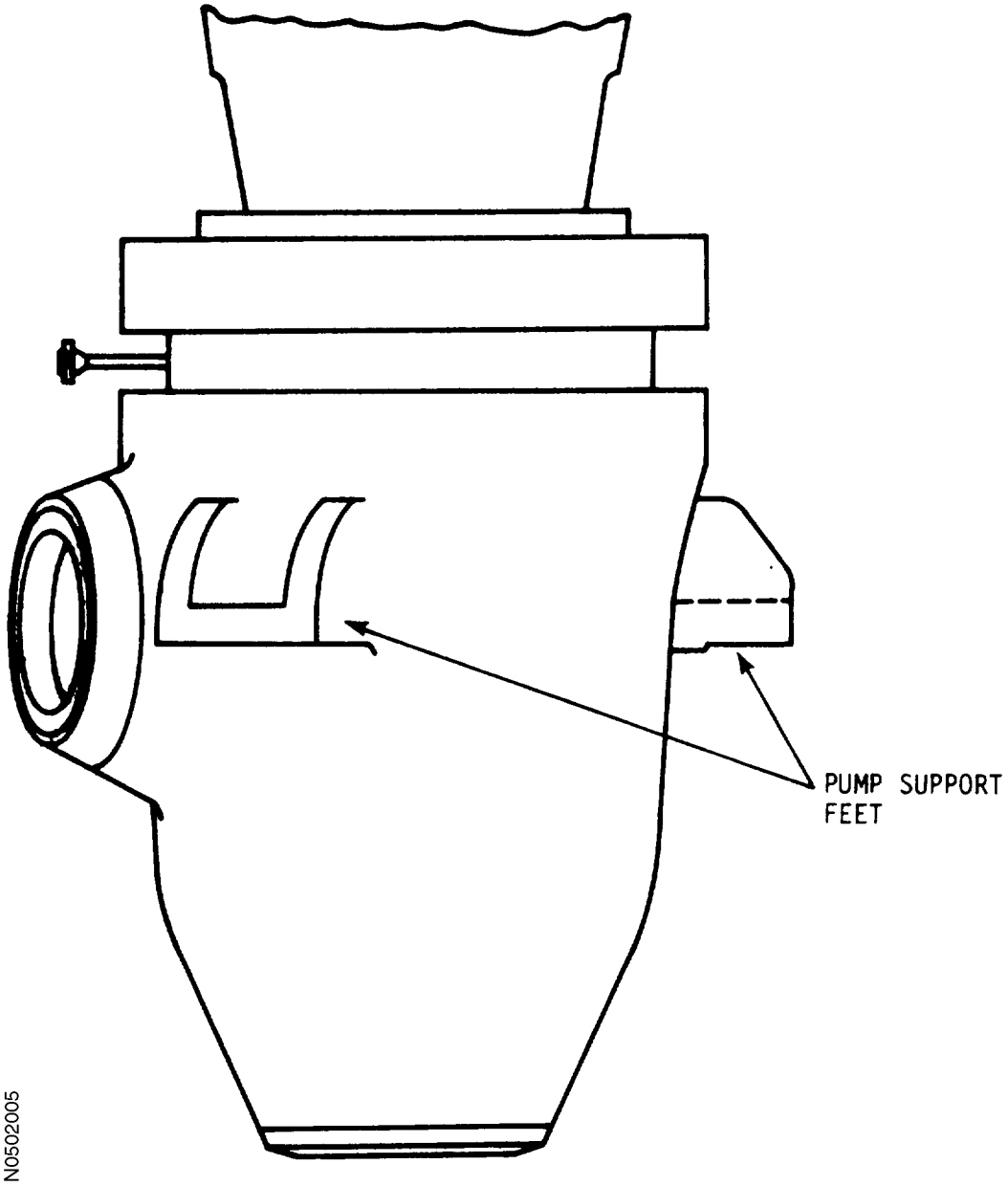

Figure 5.2-3
REACTOR COOLANT PUMP SUPPORT FEET

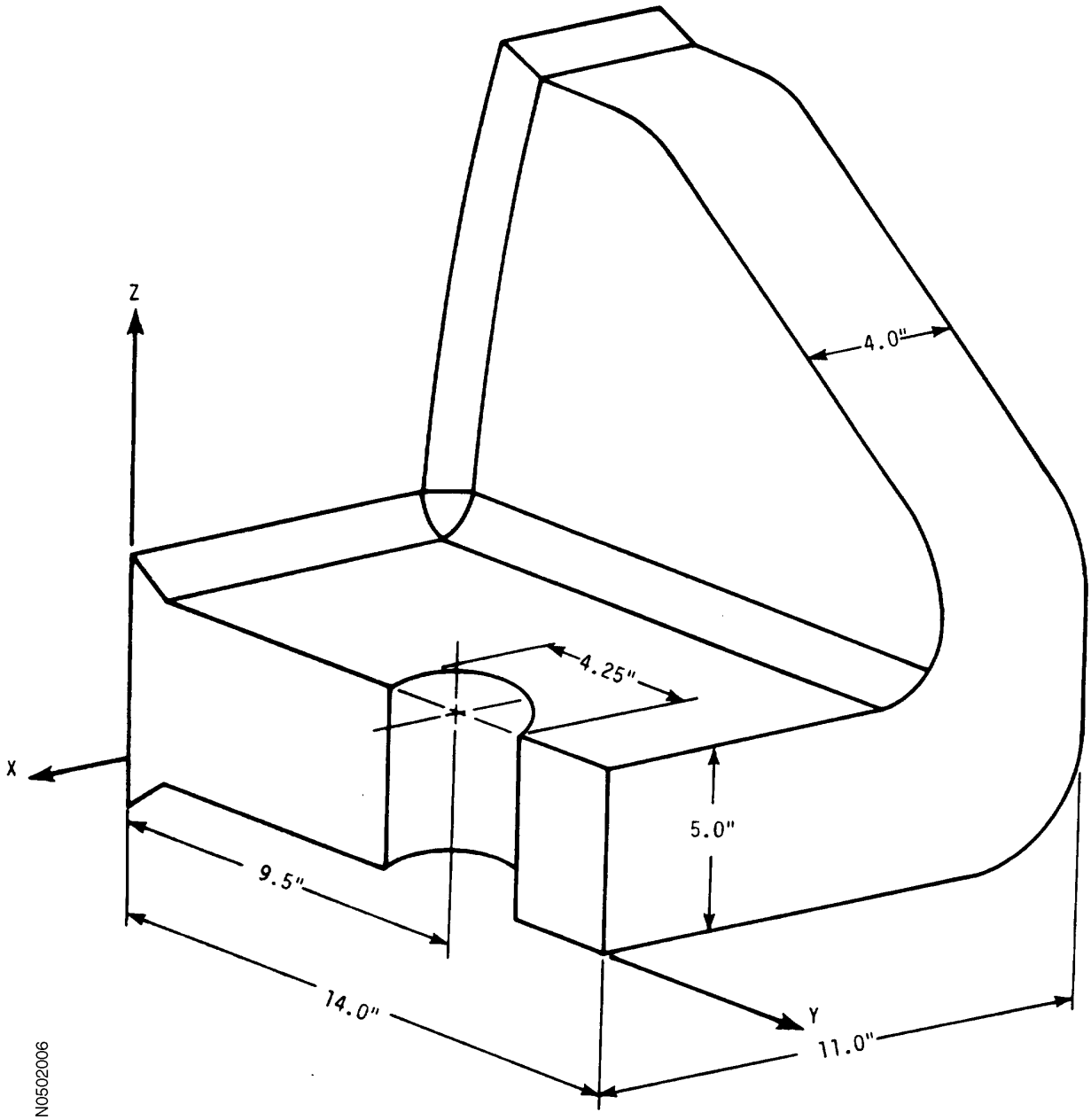

Figure 5.2-4
REACTOR COOLANT SYSTEM
WATER SOLID OPERATION

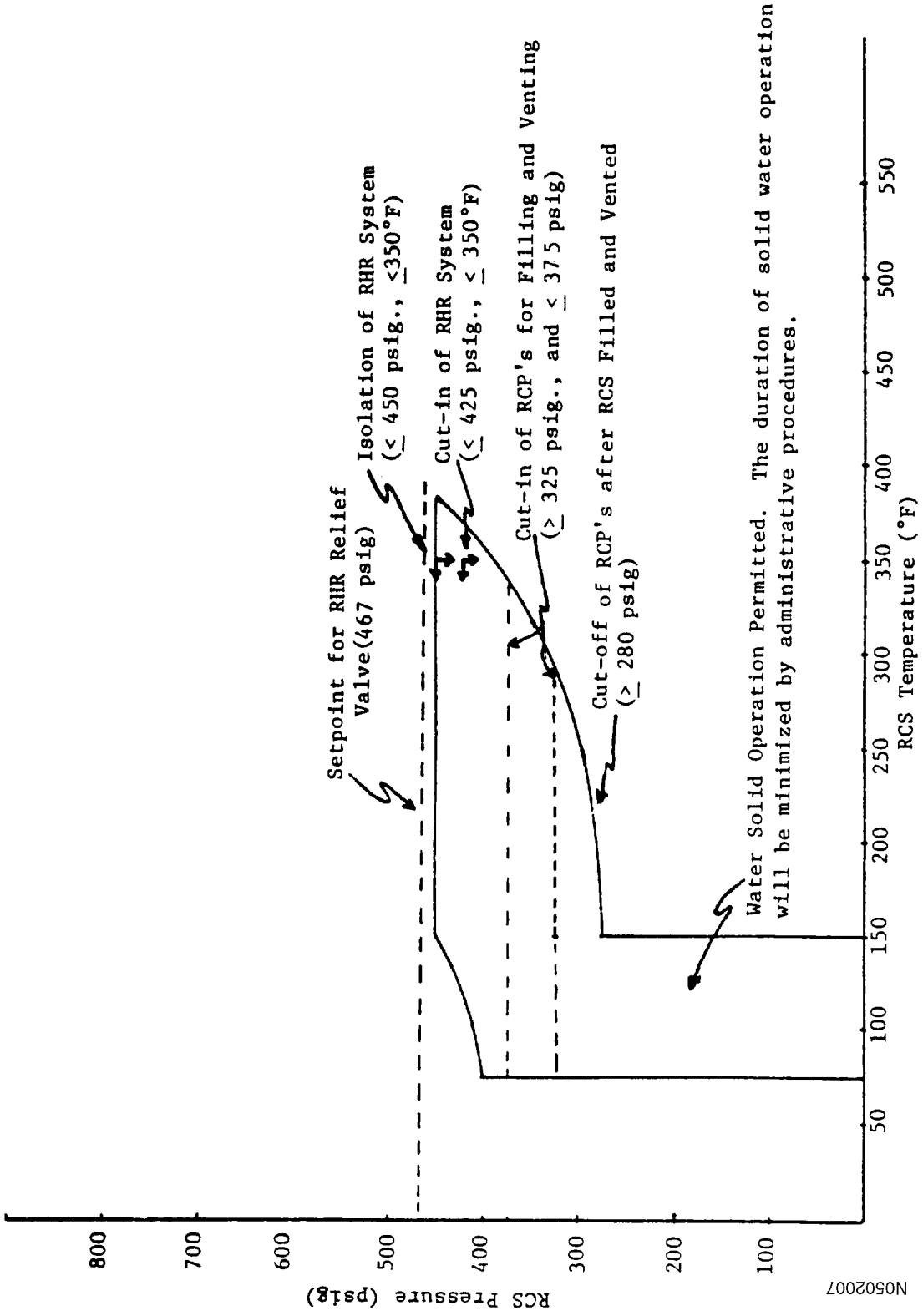

Figure 5.2-5
TYPICAL REACTOR COOLANT SYSTEM HEATUP LIMITATIONS CURVE

This typical heatup curve is provided for information only. As discussed in Section 5.2.3.3.1, the actual heatup curve is located in the unit's Technical Specifications.

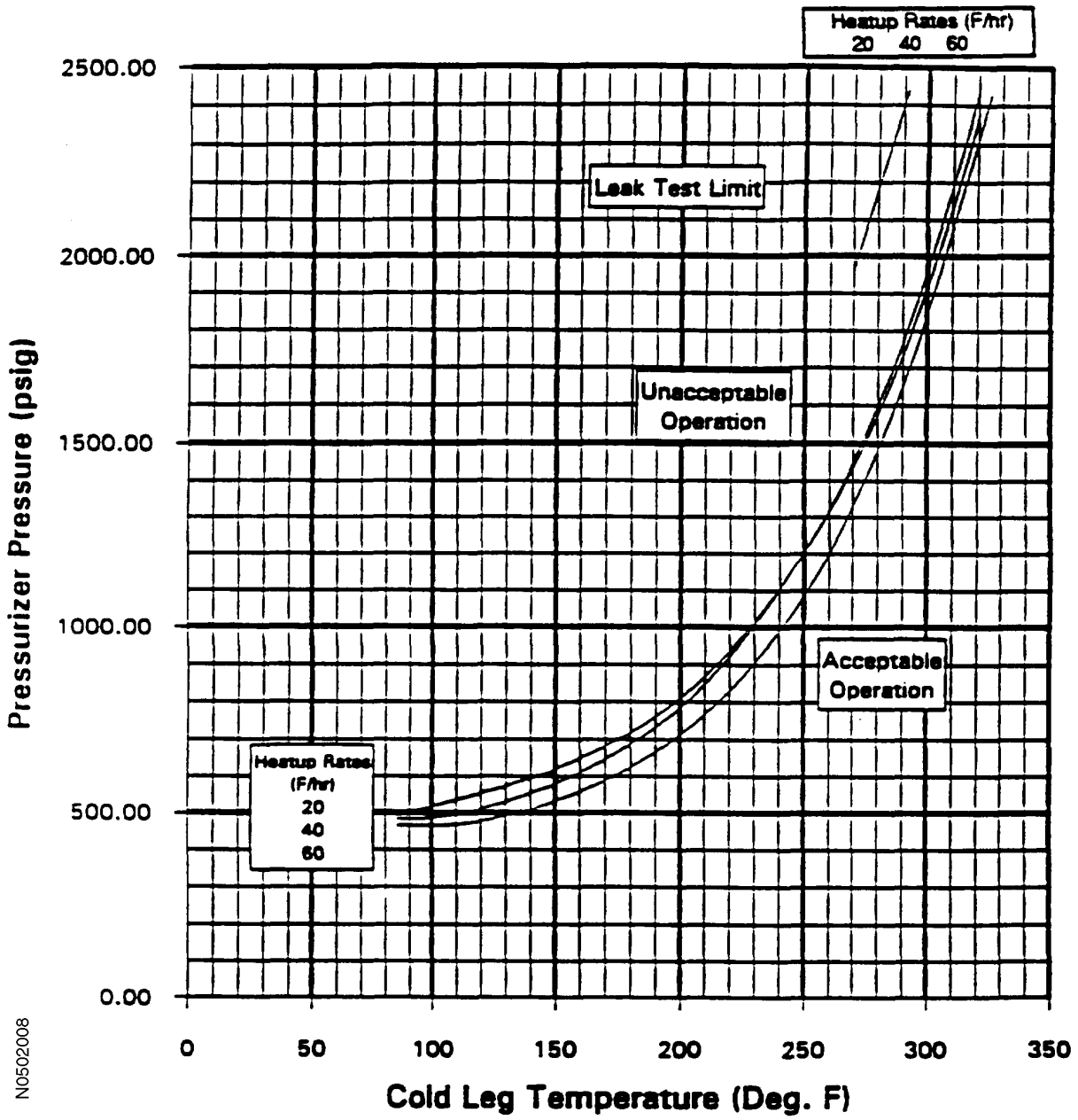

Figure 5.2-6
TYPICAL REACTOR COOLANT SYSTEM COOLDOWN LIMITATIONS CURVE

This typical cooldown curve is provided for information only. As discussed in Section 5.2.3.3.1, the actual cooldown curve is located in the unit's Technical Specifications.

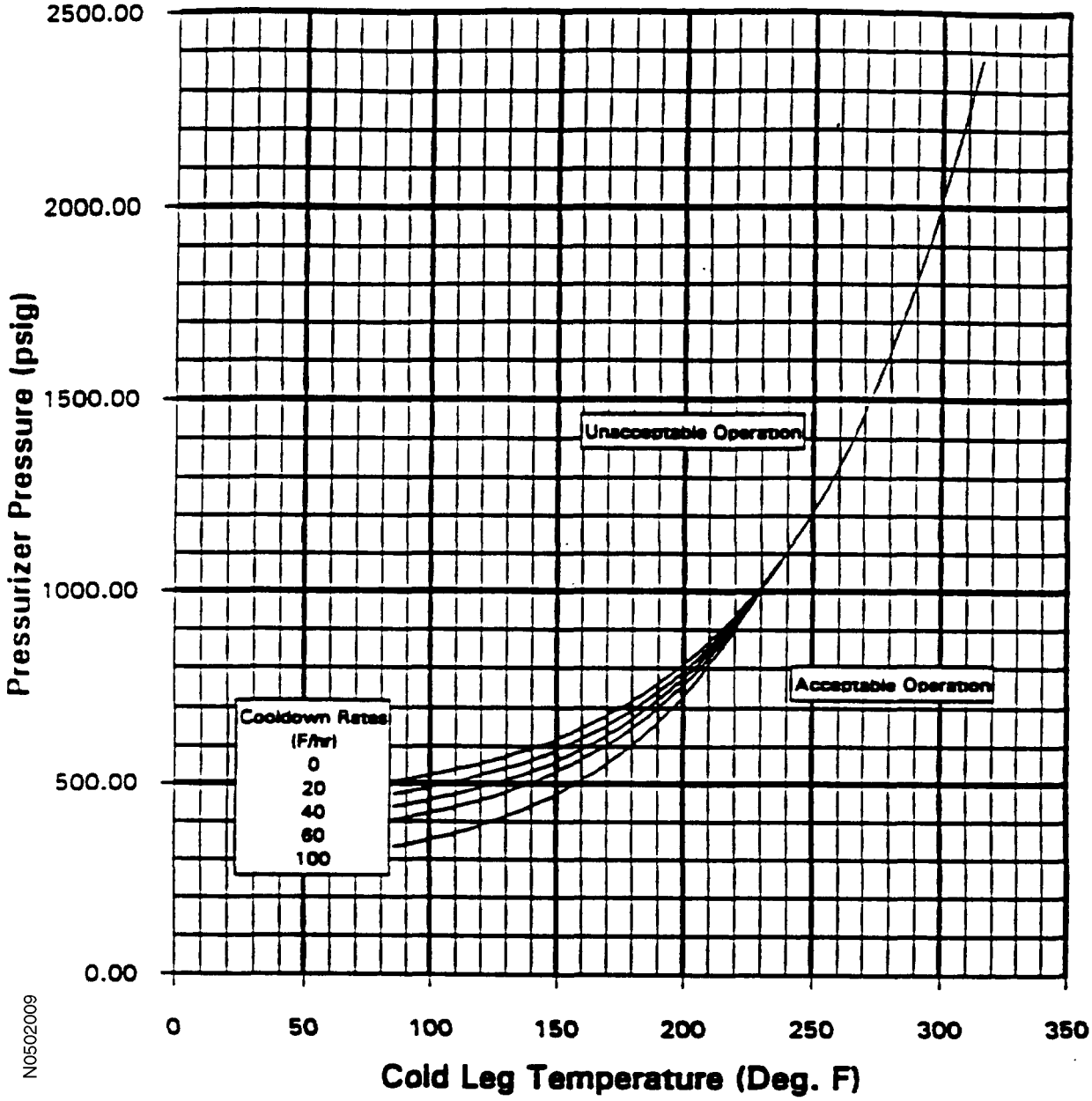

The following information is HISTORICAL and is not intended or expected to be updated for the life of the plant.

Figure 5.2-7
EFFECT OF FLUENCE AND COPPER CONTENT ON SHIFT OF RT_{NDT}
FOR REACTOR VESSEL STEELS EXPOSED TO 550°F TEMPERATURE

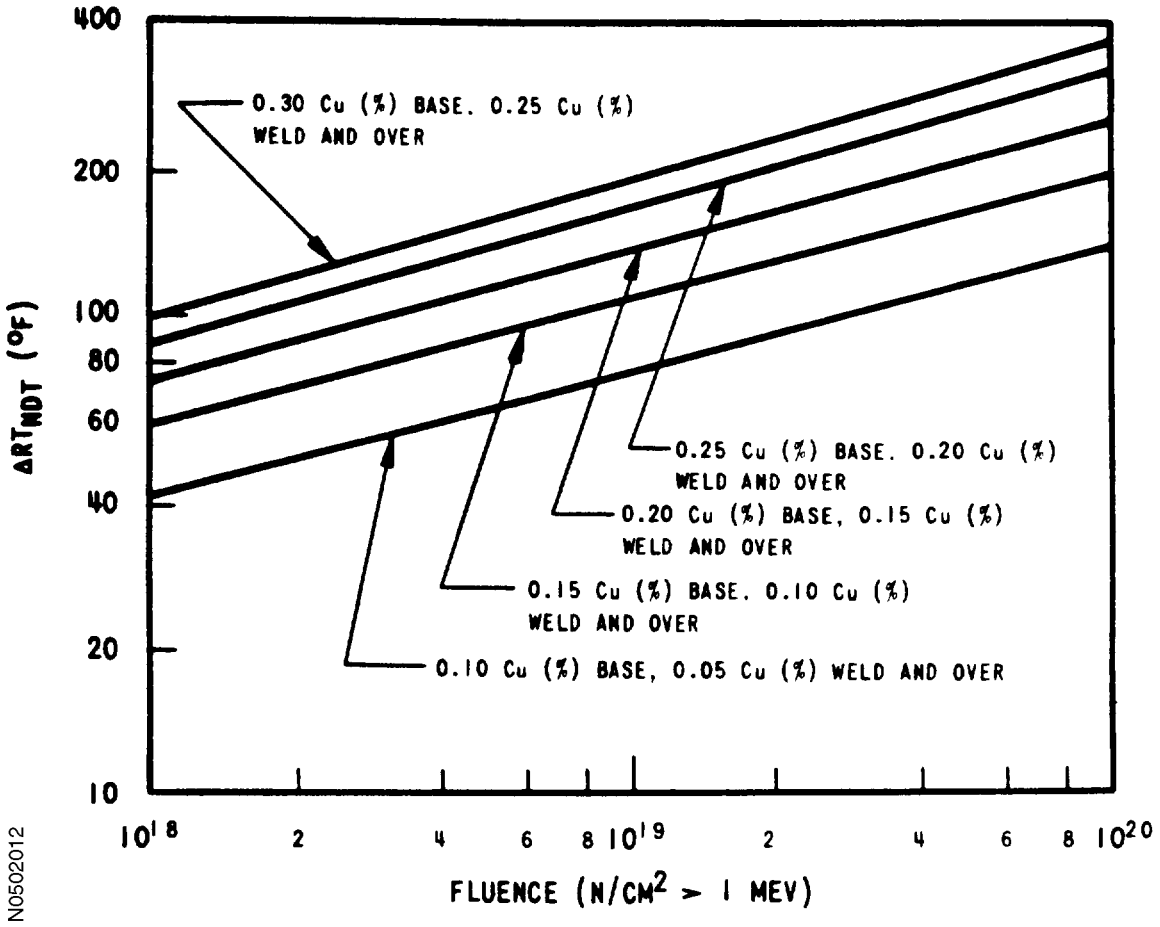

(Utilized in the development of pre-startup heatup and cooldown curves valid to 5 EFPY and 8 EFPY for Units 1 and 2 respectively.)

The following information is HISTORICAL and is not intended or expected to be updated for the life of the plant.

Figure 5.2-8
FLUENCE VERSUS FULL POWER YEARS

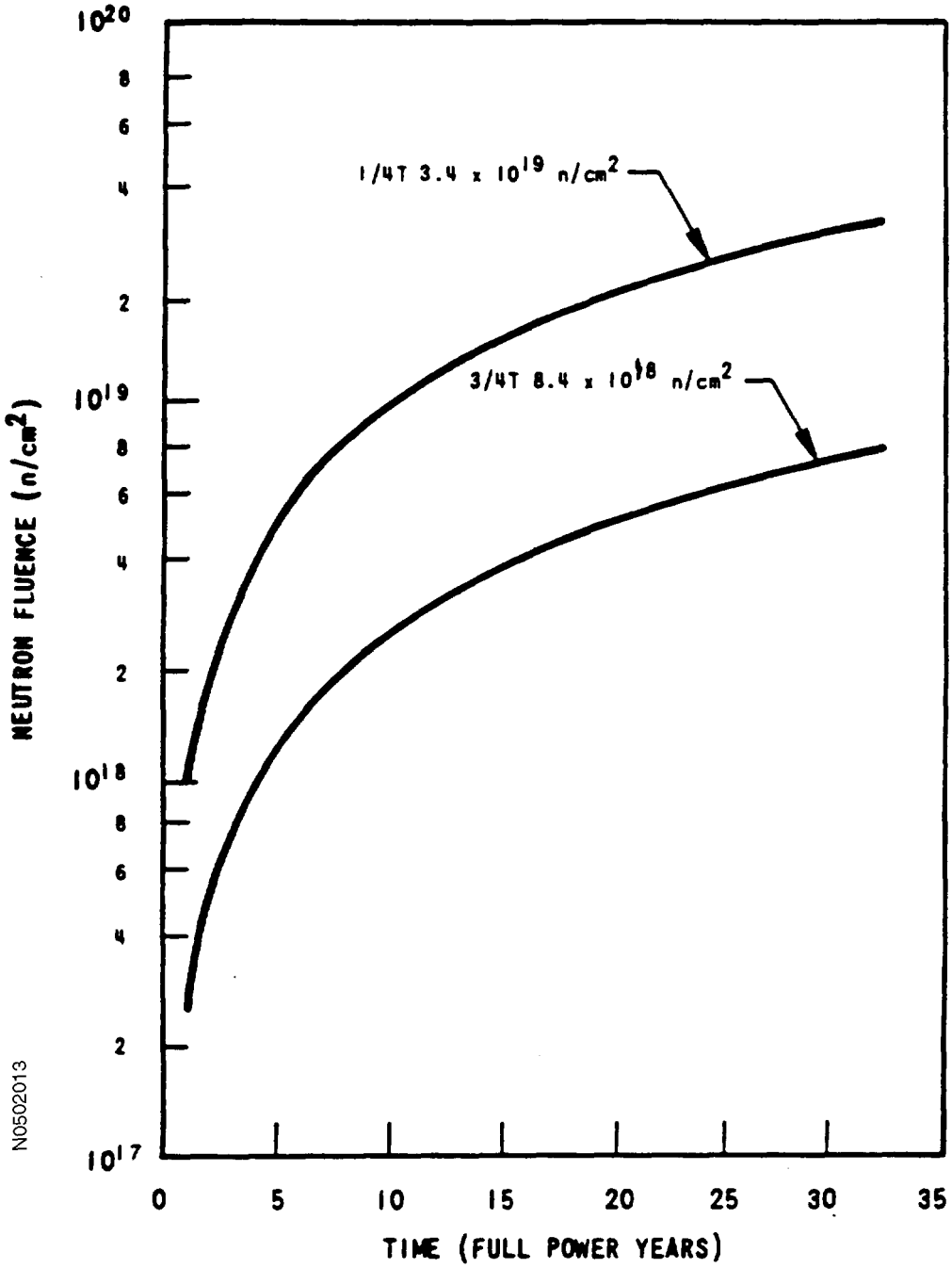

(Utilized in the development of pre-startup heatup and cooldown curves valid to 5 EFPY and 8 EFPY for Units 1 and 2 respectively.)

Figure 5.2-9
K_{ID} LOWER BOUND FRACTURE TOUGHNESS A533V
(REFERENCE WCAP 7623) GRADE B CLASS 1

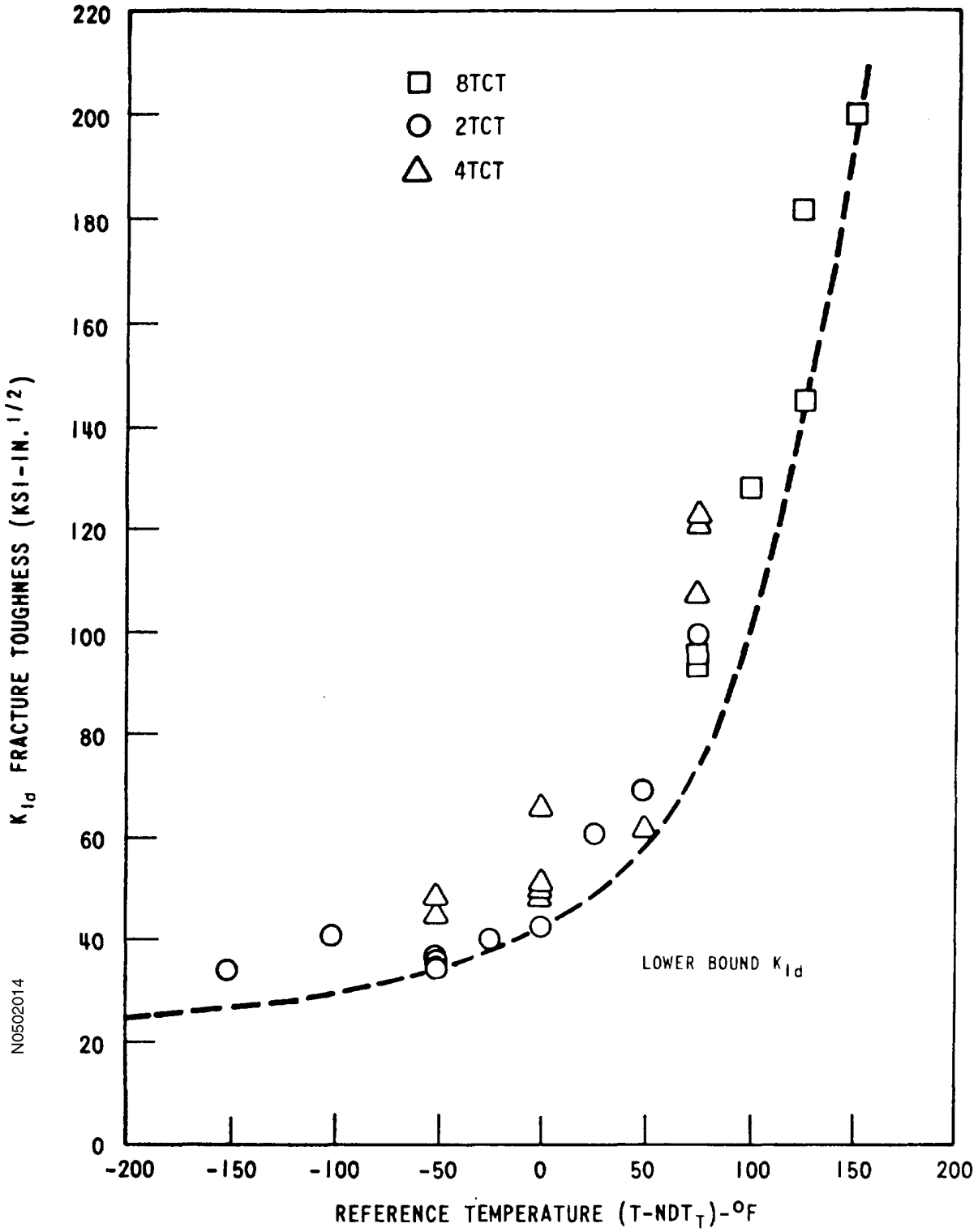

Figure 5.2-10
CORTEN AND SAILORS CORRELATION

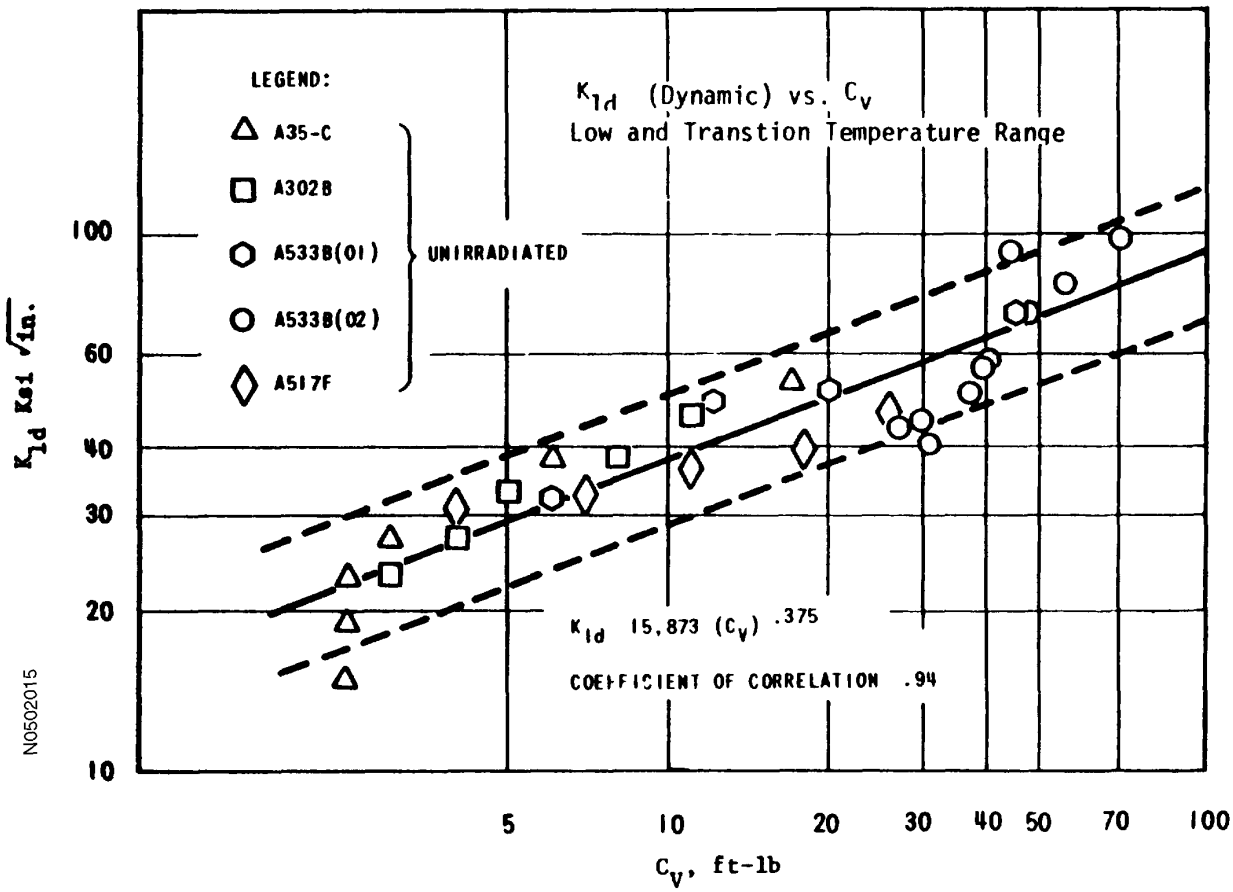

Figure 5.2-11
CONTAINMENT RADIATION MONITOR SENSITIVITIES

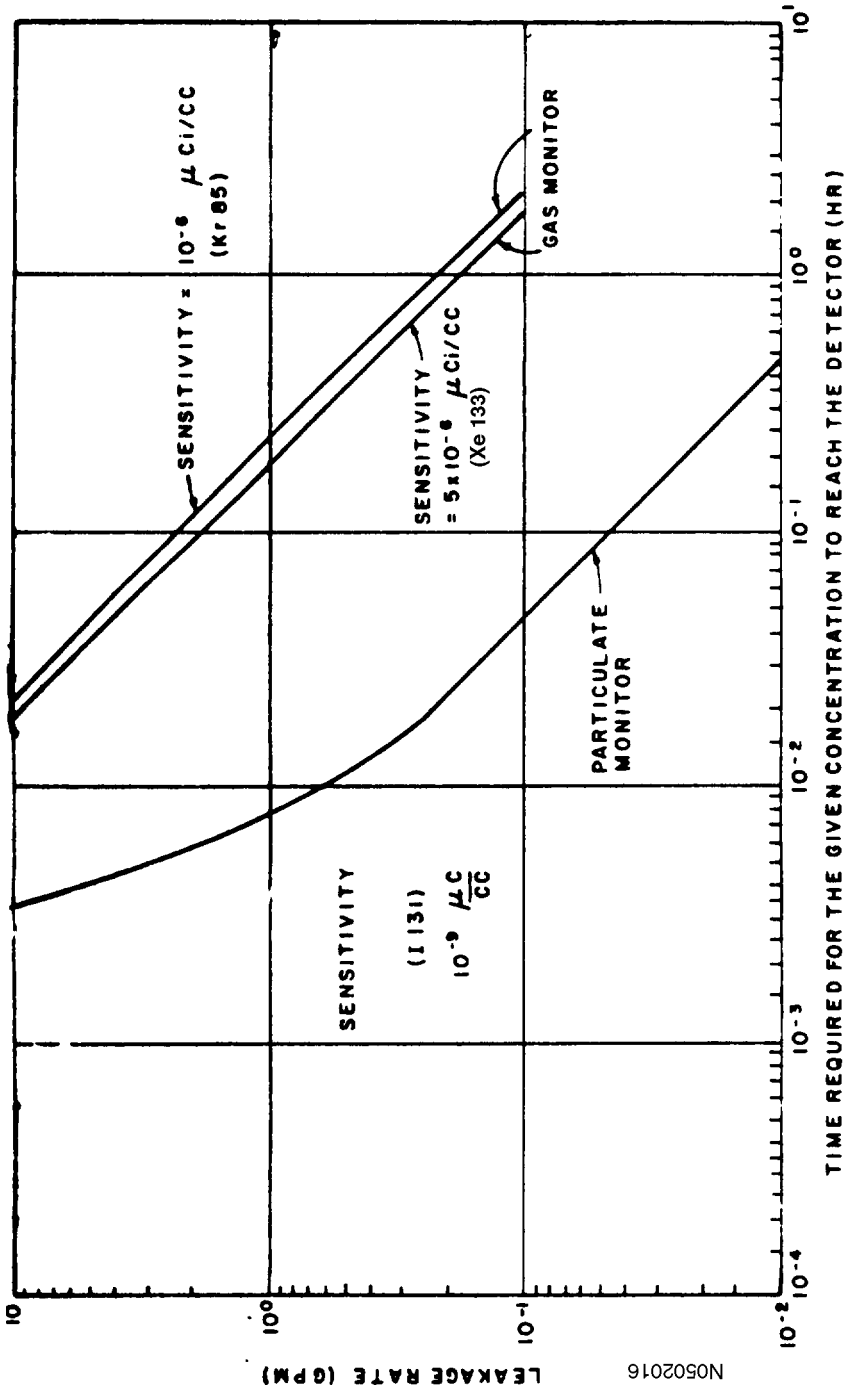

N050201 6

Intentionally Blank

5.3 THERMAL-HYDRAULIC SYSTEM DESIGN

The thermal and hydraulic design bases of the reactor coolant system are described in Sections 4.3 and 4.4 in terms of core heat generation rates, DNBR, analytical models, peaking factors, and other relevant aspects of the reactor. The thermal and hydraulic characteristics are given in Tables 4.3-1, 4.4-1, 4.4-2, and 4.4-3.

Figure 5.3-1 shows a temperature-power operating map depicting T_{avg} as a function of percent of full power.

In order to meet the net positive suction head and seal leakage requirements for the operation of the reactor coolant pumps, the operating procedures state that the pressure differential across the No. 1 seal must be at least 200 psig before operating the reactor coolant pump.

The reactor coolant system is designed on the basis of steady-state operation at full-power heat load. The reactor coolant pumps use constant speed drives as described in Section 5.5.1. The reactor power is controlled to maintain average coolant temperature at a value that is a linear function of load, as described in Section 7.7. Transient effects are evaluated in Chapter 15 as follows: complete loss of forced reactor coolant flow (15.3.4), partial loss of forced reactor coolant flow (15.2.5), start-up of an inactive loop (15.2.6), loss of load (15.2.7), loss of normal feedwater (15.2.8), loss of offsite power (15.2.9) and accidental depressurization of the reactor coolant system (15.2.12). The natural circulation capability of the system is described in Section 15.2.9.

Figure 5.3-1
TEMPERATURE VERSUS POWER

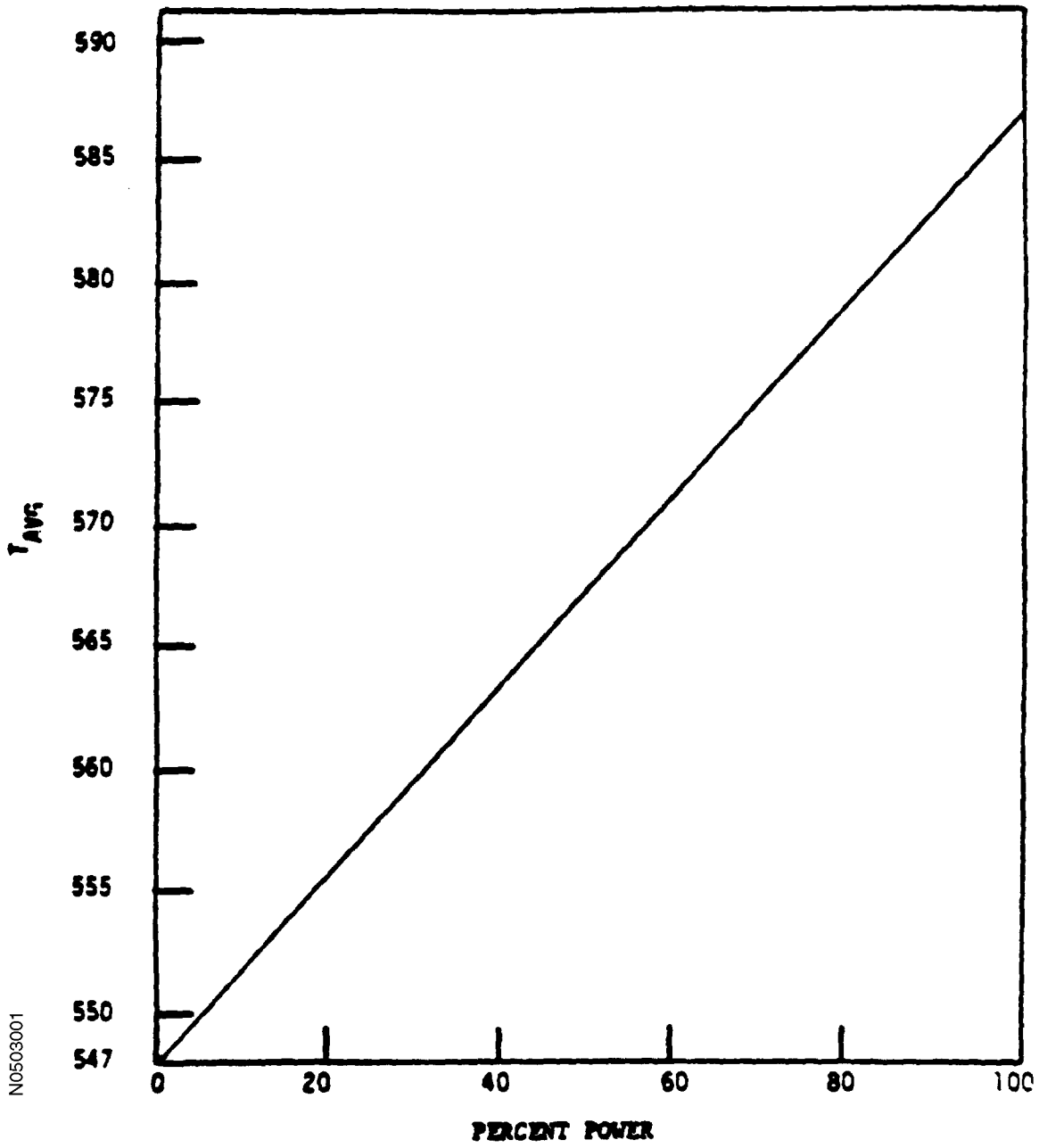

5.4 REACTOR VESSEL AND APPURTENANCES

5.4.1 Design Bases

5.4.1.1 Codes and Specifications

The vessel is Safety Class 1. The design and fabrication of the reactor vessel was in accordance with ASME Code Section III, 1968, Class A. Material specifications were in accordance with the ASME Code requirements and are given in Section 5.2.

The reactor vessel closure heads have been replaced with closure heads designed and fabricated to the French Code, RCC-M Code 1993 Edition with 1st Addenda June 1994, 2nd Addenda June 1995, 3rd Addenda June 1996, and Modification Sheets: FM 797, 798, 801, 802, 803, 804, 805, 806, and 807. The closure head sizing calculations and the stress and fatigue analysis were performed to the requirements of ASME Code Section III, 1995 Edition through 1996 Addenda. The updated Design Reports certified that the closure heads meet the design requirements and stress limits for component pressure boundaries of the ASME B&PV Code Section III, 1968 Edition through Winter 1968 Addenda.

5.4.1.2 Design Transients

Cyclic loads are introduced by normal power changes, reactor trip, start-up, and shutdown operations. These design-base cycles were selected for fatigue evaluation and constitute a conservative design envelope for the projected life of the plant. Vessel analyses result in a usage factor less than one.

With regard to the thermal and pressure transients involved in the loss-of-coolant accident (LOCA), the reactor vessel was analyzed to confirm that the delivery of cold emergency core cooling water to the vessel following a LOCA would not cause a loss of integrity of the vessel.

The design specifications required analysis to prove that the vessel is in compliance with the fatigue limits of Section III of the ASME Code. The loadings and transients specified for the analysis were based on the most severe conditions expected during service. The vessel design specifications provide for design limits on heatup and cooldown rates of 100°F/hr. However, the heatup and cooldown rates imposed by plant operating limits are 50°F/hr and 75°F/hr (Reference 10) respectively. For abnormal or emergency conditions, a cooldown rate of 100°F/hr is allowed.

Design transients are discussed in detail in Section 5.2.

5.4.1.3 Protection Against Nonductile Failure

Protection against nonductile failure is discussed in Section 5.2.

5.4.1.4 Inspection

The internal surface of the reactor vessel can be inspected periodically using visual and/or nondestructive techniques over the accessible areas. During refueling, the vessel cladding can be inspected in certain areas between the closure flange and the primary coolant inlet nozzles, and, if deemed necessary, the core barrel can be removed, making the entire inside vessel surface accessible.

The closure head is examined visually during each refueling. Optical devices permit a selective inspection of the cladding, CRDM nozzles, and the gasket-seating surface. The knuckle transition piece, which is the area of highest stress of the closure head, is accessible on the outer surface for visual inspection, dye penetrant or magnetic particle, and ultrasonic testing. The closure studs can be inspected periodically using visual, magnetic particle, and/or ultrasonic techniques.

A control rod housing failure does not cause a propagation of failure to adjacent housings or to any other part of the reactor coolant system boundary.

The reactor vessel was designed to accommodate the requirements of the ASME Code, Section XI, *Rules for Inservice Inspection of Nuclear Reactor Coolant Systems*, as discussed in Section 5.2.5.

5.4.2 Description

The reactor vessel is cylindrical, with a hemispherical lower head of welded construction and a removable, bolted flanged and gasketed, hemispherical upper head. The reactor vessel flange and head are sealed by two hollow metallic o-rings. Seal leakage is detected by means of two leakoff connections: one between the inner and outer ring and one outside the outer o-ring. The vessel contains the core, core support structures, control rods, and other parts directly associated with the core. The reactor vessel closure head contains head adaptors. These head adaptors are tubular members, attached by partial penetration welds to the underside of the closure head. The upper end of these adaptors contain acme threads for the assembly of control rod drive mechanisms or instrumentation adaptors. Except for the removed part-length control rod drive mechanisms, the seal arrangement at the upper end of these adaptors consists of a welded flexible canopy seal. The removed part-length control rod drive mechanisms were replaced with threaded caps and are seal welded with a fillet type weld. Inlet and outlet nozzles are spaced around the vessel. Outlet nozzles are located on the vessel to facilitate optimum layout of the reactor coolant system equipment. The inlet nozzles are tapered from the coolant loop vessel interfaces to the vessel inside wall to reduce loop pressure drop. Figure 5.4-1 shows the general outline and major dimensions of the vessel.

The bottom head of the vessel contains penetration nozzles for the connection and entry of the nuclear incore instrumentation. Each nozzle consists of a tubular member made of an

Inconel-stainless steel composite tube. Each tube is attached to the inside of the bottom head by a partial penetration weld.

Internal surfaces of the vessel that are in contact with primary coolant have a weld overlay of at least 0.125 inch of stainless steel or Inconel. The exterior of the reactor vessel is insulated with canned stainless steel reflective sheets. The insulation is 3 inches thick and contoured to enclose the top, sides, and bottom of the vessel. All the insulation modules are removable, but access to vessel side insulation is limited by the surrounding concrete.

5.4.2.1 **Fabrication Processes**

1. The use of severely sensitized stainless steel as a pressure boundary material has been prohibited and has been eliminated by either a select choice of material or by programming the method of assembly (see Section 5.4.3.1). This restriction on the use of sensitized stainless steel has been established to provide the primary system with preferential materials suitable for the following:

   a. Improved resistance to contaminants during shop fabrication, shipment, construction, and operation.

   b. Application in critical areas.

2. Minimum preheat requirements have been established for pressure boundary welds using low-alloy weld material. Special preheat requirements have been added for stainless steel cladding of low-stressed areas. Preheat must be maintained until post-weld heat treatment, except for overlay cladding, where it may be lowered to ambient temperature under restrictive conditions. Limitations on preheat requirements are precautionary measures to decrease the probabilities of weld cracking by decreasing temperature gradients, lowering susceptibility to brittle transformation, prevention of hydrogen embrittlement, and reduction in peak hardness. Limitations on pretest requirements are precautionary measures taken to decrease temperature gradients and ensure upper transformation products on cooling along with reduction in peak hardness.

3. The CRDM head adaptor threads and surfaces of the guide studs are chrome plated to prevent possible galling of the mated parts.

4. At all locations in the reactor vessel where stainless steel and Inconel are joined, the final joining beads are Inconel weld metal to prevent cracking.

5. Specific welding process and heat treatment are as follows:

   a. Base material specification and type: The base material of all nozzles in the North Anna Unit 2 reactor vessel is ASTM A-508, Class 2.

   b. Process type, electrode sizes: Single-layer clad using automatic metal inert gas welding with cold wire addition and oscillation, tow-wire process using 1/16-inch-diameter wire.

c. Heat input for each layer: 230 to 290A; 34 ±2V; 4.3 inches/minute speed.

d. Preheat, postheat, interpass temperature: Preheat temperature is 120°C (250°F) minimum; postheat temperature is preheat temperature raised to 205°C (400°F), held for 2 hours, and cooled to ambient (soaking heat treatment); interpass temperature is 200°C (392°F) maximum.

e. Postweld heat treatment (PWHT): Intermediate PWHT is 1100°F to 1175°F held for 15 minutes; final PWHT is 1100°F to 1175°F held for 1 hour/inch weld thickness.

f. Stress relief heat treatment is the same as shown in response to item (e) above.

g. Manufacturer and subcontractors: The reactor vessel was manufactured by Rotterdam Dockyard Company, Rotterdam, The Netherlands; the nozzles were clad by Sulzer Brothers Limited, Winterthur, Switzerland, as subcontractor to Rotterdam.

Principal design parameters of the reactor vessel are given in Table 5.4-1.

5.4.3 Evaluation

5.4.3.1 Steady-State Stresses

Evaluation of steady-state stresses is discussed in Section 5.2.

5.4.3.2 Fatigue Analysis Based on Transient Stresses

Fatigue analysis of transient stresses is discussed in Section 5.2.

5.4.3.3 Thermal Stresses Due to Gamma Heating

The stresses due to gamma heating in the vessel wall were calculated by the vessel vendor and combined with the other design stresses. They are compared with the code allowable limit for mechanical plus thermal stress intensities to verify that they are acceptable. The gamma stresses are low and thus have a negligible effect on the stress intensity in the vessel.

5.4.3.4 Thermal Stresses Due to a LOCA

A fracture mechanics evaluation of the reactor vessel as a result of thermal stresses following a LOCA is discussed in Section 5.2.

5.4.3.5 Heatup and Cooldown

Heatup and cooldown requirements for the reactor vessel material are discussed in Section 5.2.

5.4.3.6 Irradiation Surveillance Program

In the surveillance programs, the evaluation of the radiation damage is based on preirradiation testing of Charpy V-notch and tensile specimens and postirradiation testing of

Charpy V-notch and tensile test specimens. Wedge-opening loading (WOL) fracture mechanics test specimens are also irradiated for potential supplemental testing. These programs are directed toward the evaluation of the effect of radiation on the fracture toughness of reactor vessel steels, based on the transition temperature approach and the fracture mechanics approach, and are in accordance with ASTM-E-185, *Recommended Practice for Surveillance Tests for Nuclear Reactor Vessels* (Reference 1). The North Anna units are licensed to ASTM E-185-1968. (Later editions may be used, but including only those editions through 1982. See References 7 & 11.) The surveillance program does not include thermal control specimens. These specimens are not required, since the surveillance specimens will be exposed to the combined neutron irradiation and temperature effects and the test results will provide the maximum transition temperature shift. Thermal control specimens as considered in ASTM-E-185 (Reference 1) would not provide any additional information on which the operational limits for the reactor vessel are set. The surveillance program will not include correlation monitors. Correlation monitors were used in the past because of inadequate neutron dosimeters. Present neutron dosimeters included in the capsules can be used to measure exposure throughout the life of the reactor vessel.

The reactor vessel surveillance program uses eight specimen capsules, more than the minimum number recommended by ASTM-E-185 (Reference 1). The capsules are located in guide baskets welded to the outside of the thermal shield, as shown in Figure 5.4-3, about 3 inches from the vessel wall directly opposite the center portion of the core. Sketches of an elevation and plan view showing the location and dimensional spacing of the capsules with relation to the core, thermal shield, and vessel and weld seams are shown in Figures 5.4-4 and 5.4-5, respectively. The capsules can be removed and replaced when the vessel head and upper internals are removed. The capsules contain SA-508 Class 2 reactor vessel forging specimens from the Unit 1 lower shell forging and the Unit 2 intermediate shell forging. The forging specimens were machined in both the tangential orientation (longitudinal axis of specimen parallel to major working direction) and axial orientation (longitudinal axis of specimen perpendicular to major working direction). The surveillance capsules also include specimens that represent the weld metal and heat-affected zone metal associated with the surveillance forgings. (As part of the surveillance program, a report of the residual elements in weight percent to the nearest 0.01% will be made for surveillance material base metal and as deposited weld metal.) The eight capsules contain 32 tensile specimens, 352 Charpy V-notch specimens (which include weld metal and heat-affected zone material), and 32 WOL specimens. Dosimeters including Ni, Cu, Fe, Co-Al, Cd shielded Co-Al, Cd shielded Np-237, and Cd shielded U-238 are placed in filter blocks drilled to contain the dosimeters. The dosimeters permit an evaluation of the flux seen by the specimens and vessel wall. In addition, thermal monitors made of low-melting alloys are included to monitor maximum temperature of the specimens. The specimens are enclosed in a tight-fitting stainless steel sheath to prevent corrosion and ensure good thermal conductivity.

The complete capsule is helium leak tested. Vessel material sufficient for at least two capsules will be kept in storage should the need arise for additional replacement test capsules in

the program. This requirement is satisfied by additional vessel surveillance material that is available from several standby surveillance capsules in each unit, and from the reactor system supplier should the need arise for additional reactor vessel material testing.

Each of four capsules (S, V, W, and Z) will contain the following specimens:

Material	Number of Charpy Specimens	Number of Tensile Specimens	Number of WOL Specimens
Limiting forging[1]	8	-	-
Limiting forging[2]	12	2	4
Weld metal	12	2	-
Heat-affected zone metal	12	-	-

Each of four additional capsules (T, U, X, and Y) will contain the following specimens:

Material	Number of Charpy Specimens	Number of Tensile Specimens	Number of WOL Specimens
Limiting forging[1]	8	-	-
Limiting forging[2]	12	2	-
Weld metal	12	2	4
Heat-affected zone metal	12	-	-

The following dosimeters and thermal monitors are included in each capsule:

Dosimeters

Pure Cu

Pure Fe

Pure Ni

Co-Al (0.15% Co)

Co-Al (Cadmium shielded)

U-238 (Cadmium shielded)

Np-237 (Cadmium shielded)

1. Specimens oriented in the major working direction (Tangential).
2. Specimens oriented normal to the major working direction (Axial).

Thermal Monitors

97.5 Pb, 2.5 Ag (579°F melting point)

97.5 Pb, 1.75 Ag, 0.75 Sn (590°F melting point)

Specimen capsules will be removed from the reactor only during normal refueling periods. Because three of the capsules (S, T, and Z) were originally located in areas where the lead factor is less than one, capsule reinsertions from these locations to areas exceeding a lead factor of one are in the capsule withdrawal schedule. The reinsertion of the capsules with low lead factors ensures that, at the time of removal, the capsules will have received a neutron fluence greater than the maximum fluence at the vessel wall. Therefore, there will be at least one capsule leading the vessel fluence throughout the life of the vessel.

Each specimen capsule required to satisfy ASTM E-185, *Conducting Surveillance Tests for Light-Water Cooled Nuclear Power Reactor Vessels,* is removed after radiation exposure and transferred to a post-irradiation test facility for capsule disassembly and specimen testing. Irradiated surveillance capsules which do not require testing to satisfy ASTM E-185 are designated as standby capsules. There currently is no detailed regulatory guidance regarding the treatment of standby capsules that are removed but not tested. To address this concern, all surveillance capsules placed in storage will be maintained for possible future insertion. If one or more capsules will not be maintained in such a way as to permit future insertion, then the NRC staff will be notified of this change (Reference 11).

The schedule for the removal and reinsertion of the capsules is shown on Table 5.4-2 (Unit 1) and 5.4-3 (Unit 2).

5.4.3.6.1 Neutron Dosimetry

Fluence data are required to (1) provide a correlation between radiation-induced property changes and fluence for surveillance specimens, and (2) determine exposure and, hence, embrittlement of the pressure vessel at the limiting weld and base metal locations. Passive dosimeters included in each surveillance capsule provide a benchmark for the determination of the neutron fluence to each surveillance capsule.

Cs-137, which has a half-life of approximately 30 years, is produced by the fission of Np-237 and U-238 dosimeters with approximately 6% fission yield. According to Draft Regulatory Guide DG-1053 (*Calculation and Dosimetry Methods for Determining Pressure Vessel Neutron Fluence,* dated June 1996), the nominal threshold for neutron capture resulting in fission is 0.6 MeV for Np-237 and 1.5 MeV for U-238, making the fission dosimeters most suitable for benchmarking the fast neutron fluence (E >1.0 MeV).

Dosimeters that produce short-lived isotopes provide neutron fluence benchmarks that are most representative of reactor conditions over the latter portion of the irradiation period (i.e., the

fuel cycle). Although dosimeters with high effective energy ranges are insensitive to neutrons at lower energy ranges, current fluence analysis methods are able to utilize these dosimeters to provide useful benchmark information for determining fluence estimates, even at lower energy ranges.

The energy-dependent neutron flux is not directly available from activation detectors because the dosimeters record only the integrated effect of the neutron flux on the target material as a function of both irradiation time and neutron energy. To obtain an accurate estimate of the time-averaged neutron flux incident upon the detector, the following parameters must be known: the operating history of the reactor, the energy response of the given detector, and the neutron spectrum at the detector location.

An acceptable method for calculating surveillance capsule and reactor vessel neutron fluence is documented in Virginia Power Topical Report VEP-NAF-3-A (Reference 8). This methodology was approved by the NRC in Reference 9. Other acceptable methodologies have been previously used to determine surveillance capsule and reactor vessel neutron fluence. The approach used in the analysis of the Units 1 and 2 surveillance capsules designated “U” is to calculate fast flux distributions in the capsule and the reactor vessel regions. These calculated fluxes are normalized at the capsule by comparison of measured to calculated dosimeter activities. This normalization factor is applied to all calculated fluxes in the capsule and the vessel. Fluence is obtained by a time integration of flux over the capsule irradiation period. Long-term fluence predictions are made by adjusting flux for future fuel cycle effects and then integrating over the time period of interest.

5.4.3.6.2 Analytical Model

Energy-dependent neutron fluxes at the detector locations for the Units 1 and 2 surveillance capsules designated “U” were determined using the DOT two-dimensional discrete ordinates code (Reference 3). The North Anna reactor is modeled from the core to the shield tank in the R-Theta geometry (based on a plan view along the core midplane and one-eighth core symmetry in the azimuthal dimension). Also included is an explicit model of the surveillance capsule at the proper location. The neutron transport analysis model includes detailed models of the reactor core and reactor vessel internals. Input parameters to the code include plant-specific power distribution data, the SAILOR 47-group, ENDF-BIV-based cross-section library (Reference 4), S6 (Unit 1) or S8 (Unit 2) angular quadrature, and P_3 expansion of the scattering cross-section matrix.

The surveillance capsules extend about 18 inches above and below the core midplane. Thus, the midplane flux output from the DOT calculations in R-Theta geometry requires an axial distribution adjustment to account for axial effects.

The calculation described above provides the neutron flux as a function of energy at the detector position. These calculated data are used in the following equations to obtain the

calculated activities used for comparison with the experimental values. The basic equation for the activity D (in μCi/gm) is given as follows:

$$D_i = \frac{Nf_i}{A_i 3.7\times10^4} \sum_E \sigma_n(E)\phi(E) \sum_j F_j(1-e^{-\lambda_i t_j})e^{-\lambda_i T_f} \quad (5.4\text{-}1)$$

where:

N = Avogadro's number

A_i= atomic weight of target material i

f_i = either weight fraction of target isotope in nth material or fission yield of desired isotope

$\sigma_n(E)$ = group-ageraged cross sections for material n, listed in Table D-3

$\phi(E)$ = group-averaged fluxes calculated by DOT analysis

F_j = fraction of full power during jth time interval, t_j

λ_i = decay constant of ith material

t_j = time interval of reactor operation

T_f = decay time from end of jth interval

$$C = \frac{D(\text{measured})}{D(\text{calculated})} \quad (5.4\text{-}2)$$

Measured activity is determined for each dosimeter using established ASTM procedures. Counting rates, which are obtained with a multichannel Ge(Li) gamma spectrometer, are converted to specific activity at the time of removal from the reactor.

All calculated fluxes are then normalized to more closely reflect the measured specific activities of the surveillance capsule dosimetry.

5.4.3.6.3 Capsule U Analysis Results for Units 1 and 2

5.4.3.6.3.1 North Anna Unit 1 Results. Capsule U was removed from North Anna Unit 1 at the end of the sixth cycle of operation. The capsule dosimeters were evaluated and found to have a cumulative fast neutron, E > 1.0 MeV, fluence of 8.28×10^{18} n/cm^2. The calculated fast neutron fluence based on actual cycle power distributions at the capsule location was 8.85×10^{18} n/cm^2 which compares favorably (within 7%) with the dosimeter fluence. The peak fluence at the inside surface of the reactor vessel was calculated to be 8.83×10^{18} n/cm^2, which shows that the capsule has been exposed to slightly more neutrons than the vessel (Reference 5).

The material property testing included Charpy V-notch impact testing and tension testing of several specimens located with the surveillance capsule. The Charpy tests are performed to determine the transition temperature increases at 30 ft-lb and 50 ft-lb points, and the decrease in upper shelf energy. The tensile specimens were used to determine ultimate tensile strength and yield strength. The vessel specimens within Capsule U were obtained from the same girth weld and forging materials as those used in the reactor vessel beltline (Reference 5).

The irradiated specimen test results were compared to unirradiated specimen test results. The Charpy V-notch impact test results show the irradiation has increased the average 50 ft-lb transition temperature by 80°F to 110°F, depending on the specimen metal. Irradiation has increased the average 30 ft-lb transition temperature by 65°F to 100°F, depending on the specimen metal. The upper shelf energy (average energy absorption at full shear) results show the worst decrease to be 25 ft-lb when comparing irradiated samples to unirradiated samples. The lowest average upper shelf energy was determined to be 92 ft-lb, which is greater than the 10 CFR 50 Appendix G low limit of 50 ft-lb. The Charpy impact test results from Capsule U were also satisfactorily compared to the Capsule V results. Tension test results show a slight increase in the ultimate tensile strength and the yield strength due to irradiation. Reference 5 should be consulted for specific test results.

5.4.3.6.3.2 North Anna Unit 2 Results. Capsule U was removed from North Anna Unit 2 at the end of the sixth cycle of operation. The capsule dosimeters were evaluated and found to have a cumulative fast neutron, E > 1.0 MeV, fluence of 9.55×10^{18} n/cm^2. The calculated fast neutron fluence based on actual cycle power distributions at the capsule location was 1.06×10^{19} n/cm^2, which compares favorably (within 11%) with the dosimeter fluence. The peak fluence at the inside surface of the reactor vessel was calculated to be 8.02×10^{18} n/cm^2, which shows that the capsule has been exposed to slightly more neutrons than the vessel (Reference 6).

The material property testing included Charpy V-notch impact testing and tension testing of several specimens located with the surveillance capsule. The Charpy tests are performed to determine the transition temperature increases at 30 ft-lb and 50 ft-lb points, and the decrease in upper shelf energy. The tensile specimens were used to determine ultimate tensile strength and yield strength. The vessel specimens within Capsule U were obtained from the same girth weld and forging materials as those used in the reactor vessel beltline (Reference 6).

The irradiated specimen test results were compared to unirradiated specimen test results. The Charpy V-notch impact test results show the irradiation has increased the average 50 ft-lb transition temperature by 25°F to 55°F, depending on the specimen metal. Irradiation has increased the average 30 ft-lb transition temperature by 13°F to 60°F, depending on the specimen metal. The upper shelf energy (average energy absorption at full shear) results showed no decrease in the average upper shelf energy of the forging and weld metals when compared to unirradiated samples. Both surveillance materials exhibit a more than adequate upper shelf energy level for continued safe plant operation (Reference 6). Tension test results show a slight increase

in the ultimate tensile strength and the yield strength due to irradiation. A comparison of the 30 ft-lb transition temperature increases for the Unit 2 surveillance material with predicted increases using the methods of NRC Regulatory Guide 1.99, Revision 2, demonstrated that forging and weld material transition temperature increases were less than predicted. Reference 6 should be consulted for specific test results.

Surveillance capsule analysis results for surveillance capsules other than Capsule U are available in the various surveillance capsule analysis reports. These reports are routinely submitted to the NRC in accordance with 10 CFR 50, Appendix H.

This information was provided as part of North Anna's initial license application. The units' operating license does not specifically permit annealing the reactor vessel. The information contained in this section is being maintained for informational purposes only.

5.4.3.7 Capability for Annealing the Reactor Vessel

There are no special design features that would prohibit the in-place annealing of the vessel. If the unlikely need for an annealing operation were required to restore the properties of the vessel material opposite the reactor core because of neutron irradiation damage, a metal temperature of approximately 750°F maximum for a maximum period of 168 hours would be applied. This annealing operation would be performed with the use of a special electrical space heater assembly designed to raise the affected vessel area to the required temperature for the necessary holding period. This heater assembly would consist of an insulated vessel cover assembly below which is suspended the required space heaters positioned opposite the affected area of the reactor vessel shell. The heater assembly would contain provisions for sealing to the vessel flange and waterproof electric connections. Hydraulic connections for emptying the reactor vessel of water after the assembly is in place are also required. A thermocouple assembly to monitor vessel metal temperature during annealing would also be included.

The reactor vessel materials surveillance program is adequate to accommodate the annealing of the reactor vessel. The remaining surveillance capsules at the time of annealing would be removed and given a thermal cycle equivalent to the annealing cycle. They would then be reinserted in their normal position between the core internals assembly and the reactor vessel wall. Subsequent testing of the fracture toughness specimens from the capsules would then reflect both the radiation environment before any annealing operation and after any annealing operation.

5.4.4 Tests and Inspections

The reactor vessel quality assurance program is given in Table 5.4-4.

5.4.4.1 Ultrasonic Examinations

1. During fabrication, angle-beam inspection of 100% of plate material is performed to detect discontinuities that may be undetected by longitudinal wave examination, in addition to the design code straight-beam ultrasonic test.
2. The reactor vessel is examined after shop hydrotesting to provide a baseline map for use as a reference document in relation to later inservice inspections.

5.4.4.2 Penetrant Examinations

The partial penetration welds for the CRDM nozzles to head are inspected by dye penetrant and on completion of welding by Ultrasonic testing methods. Bottom instrumentation tubes are inspected by dye penetrant after each layer of weld metal. Core support block attachment welds are inspected by dye penetrant after the first layer of weld metal and after each 0.5 inch of weld metal. This is required to detect cracks or other defects, lower the weld surface temperatures, improve cleanliness, and prevent microfissures.

The lifting lugs are dye penetrant tested at the conclusion of the attachment welding process.

5.4.4.3 Magnetic Particle Examinations

1. All surfaces of quenched and tempered materials are inspected on the inside diameter before cladding and on the outside diameter after hydrotesting.
2. The attachment welds for the vessel supports, lifting lugs, and refueling seal ledge are inspected after the first layer of weld metal and after each 0.5 inch of weld thickness. Where welds are backchipped, the areas are inspected before welding.

5.4.4.4 Inservice Inspection

The full-penetration welds in the following areas of the installed irradiated reactor vessel are available for visual and/or nondestructive inspection, as required by ASME Code, Section XI, and described in detail in Section 5.2.5.

1. Vessel shell - the inside surface.
2. Primary coolant nozzles - the inside surface.
3. Closure head - the inside and outside surface; bottom head - the outside surface.
4. Closure studs, nuts, and washers.
5. Field welds between the reactor vessel nozzles and the main coolant piping.
6. Vessel flange seal surface.

5.4 REFERENCES

1. *Standard Practice for Conducting Surveillance Tests for Light Water Cooled Nuclear Power Reactor Vessels*, ASTM-E-185-68,-70,-73, -77,-82.
2. A. L. Lowe, Jr., *Reactor Pressure Vessel and Surveillance Program Materials Licensing Information for North Anna Units 1 and 2*, BAW-1911, Rev. 1, August 1986.
3. *DOT 3.5 - Two-Dimensional Discrete Ordinates Radiation Transport Code*, (CCC-276), Oak Ridge National Laboratory, WANL-TME-1982, December 1969.
4. Radiation Shielding Information Center, Oak Ridge National Laboratory, DLC-76, *SAILOR Coupled Self-Shielded, 47 Neutron, 20 Gamma-Ray, P3, Cross Section Library for Light Water Reactors,* March 3, 1983.
5. S. E. Yanichko and S. L. Albertin: *Analysis of Capsule U from the Virginia Electric and Power Company North Anna Unit 1 Reactor Vessel Radiation Surveillance Program*, WCAP-11777, dated February 1988.
6. E. Terek and S. L. Albertin: *Analysis of Capsule U from the Virginia Electric and Power Company North Anna Unit 2 Reactor Vessel Radiation Surveillance Program*, WCAP-12497, dated January 1990.
7. Letter from USNRC to J. P. O'Hanlon, *North Anna Power Station, Unit 1 and Unit 2—Revision to Reactor Vessel Surveillance Capsule Withdrawal Schedule,* Serial No. 99-446, dated August 13, 1999.
8. Virginia Power Topical Report VEP-NAF-3-A, *Reactor Vessel Fluence Analysis Methodology,* dated November 1997.
9. Letter from N. Kalyanam (USNRC) to J. P. O'Hanlon (Virginia Power), *North Anna Power Station, Units 1 and 2, and Surry Power Station, Units 1 and 2—Reactor Vessel Fluence Analysis Methodology (Generic Letter 92-01, Revision 1, Supplement 1) (TAC Nos. MA0555, MA0556, MA0576, and MA0577),* dated April 13, 1999.
10. Letter from W.R. Matthews to USNRC, *Virginia Electric and Power Company, North Anna Power Station Units 1 and 2, Proposed Technical Specifications Change Request, Reactor Coolant System Pressure/Temperature Limits, LTOPS Setpoints and LTOPS Enable Temperatures,* Serial No. 04-380, dated July 1, 2004.
11. Letter from E.C. Marinos USNRC to D.A. Christian (Virginia Power), *North Anna Power Station, Unit Nos. 1 and 2 (North Anna 1 and 2)—Approval of Proposed Reactor Vessel Material Surveillance Capsule Withdrawal Schedule (TAC Nos. MC6412 and MC6413),* Serial No. 06-271, dated March 15, 2006.

Table 5.4-1
REACTOR VESSEL DESIGN PARAMETERS

Parameter	Value
Design/operating pressure	2485/2235 psig
Design temperature	650°F
Overall height of vessel and closure head (bottom head o.d. to top of CRDM adapter)	42 ft. 7-3/16 in.
Thickness of insulation, minimum	3 in.
Number of reactor closure head studs	58
Diameter of reactor closure head studs	6 in.
I.d. of flange	149-9/16 in.
O.d. of flange	184 in.
I.d. at shell	157 in.
Inlet nozzle i.d.	27-1/2 in.
Outlet nozzle i.d.	29 in.
Clad thickness, minimum	1/8
Lower head thickness, minimum	5 in.
Vessel beltline thickness, best estimate	7.862 in.
Closure head thickness, minimum	6.3 in.

Key: i.d. = inside diameter
o.d. = outside diameter

Table 5.4-2
SURVEILLANCE CAPSULE WITHDRAWAL SCHEDULE[a] FOR NORTH ANNA UNIT 1

Capsule Ident.	Capsule Location [b]	Lead Factor [c]	Capsule Status [d]	Withdrawal EFPY/Year	Insert EFPY/Year	Est. Capsule Fluence ($\times 10^{19}$) [e]
V	165°	1.6	Active	1.1/1979	NA	0.263
U	65°	1.0	Active	5.9/1987	NA	0.872
W	245°	1.03	Active	14.8/1998	NA	2.052
Z	305°	0.69	Active [f]	16.1/2000	NA	1.48
Z	165°	1.6	Active [f]	NA	16.1/2000	1.48
Z	165°	1.6	Active [f]	44.5/2030 (estimated)	NA	6.49
T	55°	0.69	Standby [g]	16.1/2000	NA	1.48
T	245°	1.03	Standby [g]	NA	16.1/2000	1.48
T	245°	1.03	Standby [g]	NA	NA	5.33 (50.3 EFPY)
Y	295°	1.03	Standby [g]	NA	NA	6.08 (50.3 EFPY)
S	45°	0.55	Standby [g]	NA	NA	3.25 (50.3 EFPY)
X	285°	1.6	Standby [f,h]	NA	NA	9.44 (50.3 EFPY)

a. Withdrawal schedule meets requirements of ASTM E-185-82, *Standard Practice for Conducting Surveillance Tests for Light-Water Cooled Nuclear Power Reactor Vessels,* dated July 1, 1982. Schedule established by Reference 11 (Letter from NRC as required per 10 CFR 50 App H).

b. See Figure 5.4-5 for original capsule installation locations.

c. *Lead Factor* is defined in ASTM E-185-82 as the ratio of the neutron flux density at the location of the specimens in a surveillance capsule to the neutron flux density at the reactor pressure vessel inside surface at the peak fluence location.

d. Capsules required to satisfy the requirements of ASTM E-185-82 during the original license period are designated *Active*. Capsules not required by ASTM E-185-82, but which are maintained for contingencies, including further license renewal, are designated *Standby.*

e. Surveillance capsule neutron fluence estimates based on fluence analysis methodology presented in VEP-NAF-3-A, *Reactor Vessel Fluence Analysis Methodology,* dated April 1999. Based on the assumption of a 90% capacity factor for cycles beyond Cycle 10, 50.3 EFPY corresponds to the estimated cumulative core burnup at the end of the 60-year license period.

f. Capsule X may be withdrawn at 44.5 EFPY in lieu of Capsule Z to satisfy ASTM E-185-82 fourth capsule requirement for the license period.

g. Capsules T, Y, and S are available to satisfy potential fluence monitoring requirements during the 20-year license renewal period.

h. Capsule X may be withdrawn at EOL to provide material properties data at a fluence which exceeds that expected to be achieved at the end of the 20-year license renewal period.

Table 5.4-3
SURVEILLANCE CAPSULE WITHDRAWAL SCHEDULE[a] FOR NORTH ANNA UNIT 2

Capsule Ident.	Capsule Location [b]	Lead Factor [c]	Capsule Status [d]	Withdrawal EFPY/Year	Insert EFPY/Year	Est. Capsule Fluence ($\times 10^{19}$) [e]
V	165°	1.66	Active	1.0/1982	NA	0.246
U	65°	1.19	Active	6.3/1989	NA	0.980
W	245°	1.19	Active	15.3/1999	NA	2.092
Z	305°	0.81	Standby [f]	15.3/1999	NA	1.54
Z	165°	1.66	Standby [f]	NA	15.3/1999	1.54
Z	165°	1.66	Active [g]	42.8/2029 (estimated)	NA	6.50
T	55°	0.81	Standby [f]	15.3/1999	NA	1.54
T	65°	1.19	Standby [f]	NA	15.3/1999	1.54
T	65°	1.19	Standby [f]	NA	NA	6.31 (52.3 EFPY)
Y	295°	1.19	Standby [f]	NA	NA	7.03 (52.3 EFPY)
S	45°	0.65	Standby [f]	NA	NA	3.84 (52.3 EFPY)
X	285°	1.72	Standby [f,h]	NA	NA	10.17 (52.3 EFPY)

a. Withdrawal schedule meets requirements of ASTM E-185-82, *Standard Practice for Conducting Surveillance Tests for Light-Water Cooled Nuclear Power Reactor Vessels,* dated July 1, 1982. Schedule established by Reference 11 (Letter from NRC as required per 10 CFR 50 App H).

b. See Figure 5.4-5 for original capsule installation locations.

c. *Lead Factor* is defined in ASTM E-185-82 as the ratio of the neutron flux density at the location of the specimens in a surveillance capsule to the neutron flux density at the reactor pressure vessel inside surface at the peak fluence location.

d. Capsules required to satisfy the requirements of ASTM E-185-82 during the original license period are designated *Active*. Capsules not required by ASTM E-185-82, but which are maintained for contingencies, including further license renewal, are designated *Standby.*

e. Surveillance capsule neutron fluence estimates based on fluence analysis methodology presented in VEP-NAF-3-A, *Reactor Vessel Fluence Analysis Methodology,* dated April 1999. Based on the assumption of a 90% capacity factor beyond Cycle 10, 52.3 EFPY corresponds to the estimated cumulative core burnup at the end of the 60-year license period.

f. Capsules T, Y, S, and X are available to satisfy potential fluence monitoring requirements during the 20-year license renewal period. Capsule X may be withdrawn at 42.8 EFPY in lieu of Capsule Z to satisfy ASTM E-185-82 fourth capsule requirement for the license period.

g. Withdrawal of Capsule Z at EOL satisfies ASTM E-185-82 requirement for EOL capsule, and provide material properties data at a fluence which exceeds that expected to be achieved at the end of the 20-year license renewal period.

h. Capsule X may be withdrawn at EOL to provide material properties data at a fluence which exceeds that expected to be achieved at the end of the 20-year license renewal period.

Table 5.4-4
REACTOR VESSEL QUALITY ASSURANCE PROGRAM

	Examination			
	Radiographic	Ultrasonic	Dye Penetrant	Magnetic Particle
Forgings				
Flange		Yes		Yes
Studs		Yes		Yes
Instrumentation tube		Yes		
Main nozzles		Yes		Yes
Nozzle belt course		Yes		Yes
Shell courses		Yes		Yes
Plates				
Transition		Yes		Yes
Top head cap		Yes		Yes
Bottom head cap		Yes		Yes
Weldments				
Main seam	Yes			Yes
Instrumentation tubes to vessel			Yes	
Main nozzles to vessel	Yes			Yes
Cladding		Yes	Yes	
Nozzle safe ends	Yes	Yes	Yes	
All ferritic welds after hydrotest		Yes		Yes
All nonferritic welds after hydrotest		Yes		Yes
Seal ledge				Yes
Core pad welds				Yes

Table 5.4-5
REACTOR VESSEL CLOSURE HEAD
QUALITY ASSURANCE PROGRAM

	Examination			
	Radiographic	Ultrasonic	Dye Penetrant	Magnetic Particle
Forgings				
Flanges		Yes	Yes	
Head adaptors		Yes	Yes	
Head adaptor tube		Yes	Yes	
Plates				
Closure Head Dome		Yes		
Weldments				
CRD heat adaptors connection to head			Yes	
Head adaptors tube to forging		Yes	Yes	
Cladding		Yes	Yes	
Head lifting lugs			Yes	Yes

Figure 5.4-1
REACTOR VESSEL

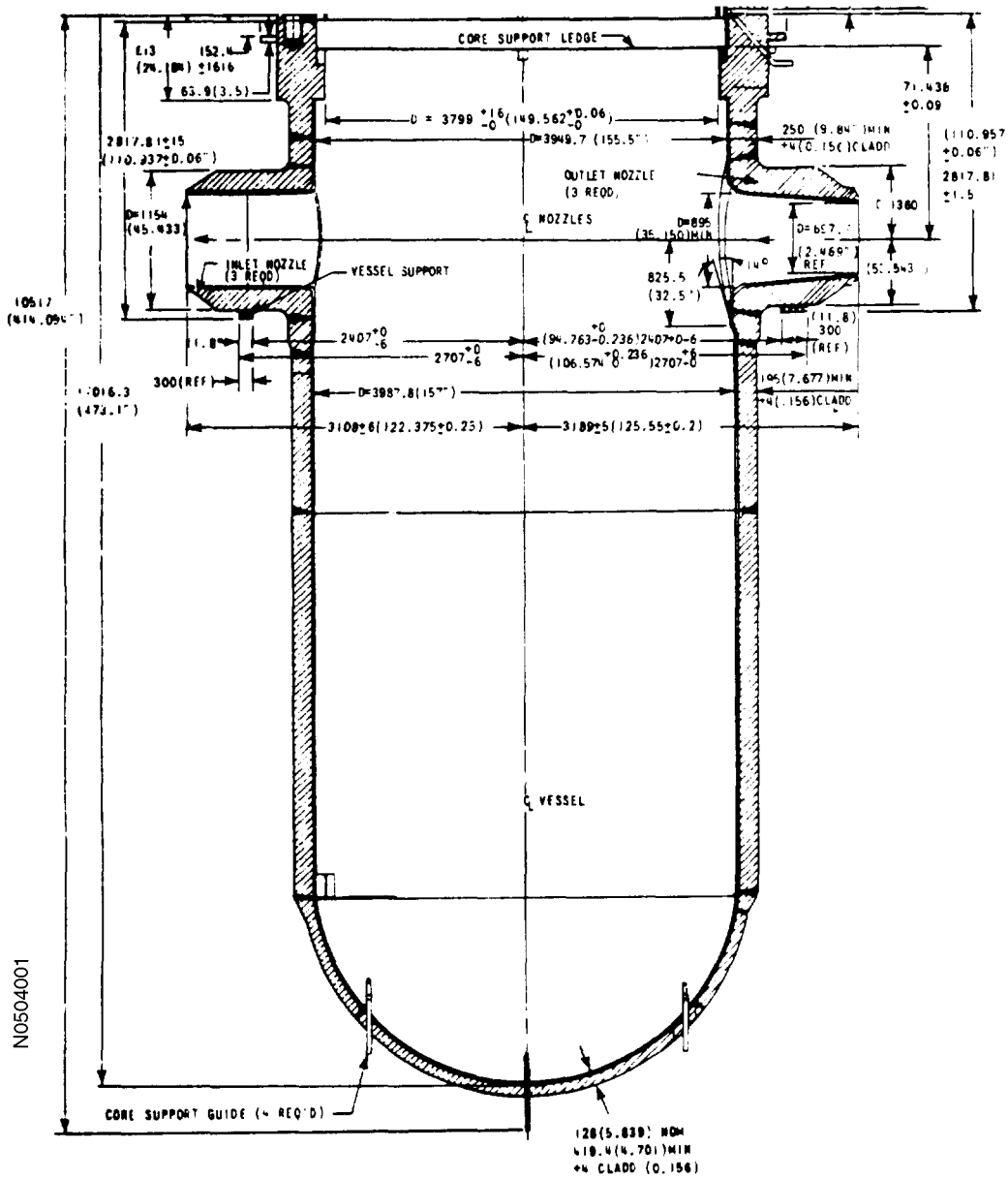

N0504001

For RV closure head see Figure 5.4-2.

Figure 5.4-2
REACTOR VESSEL HEAD

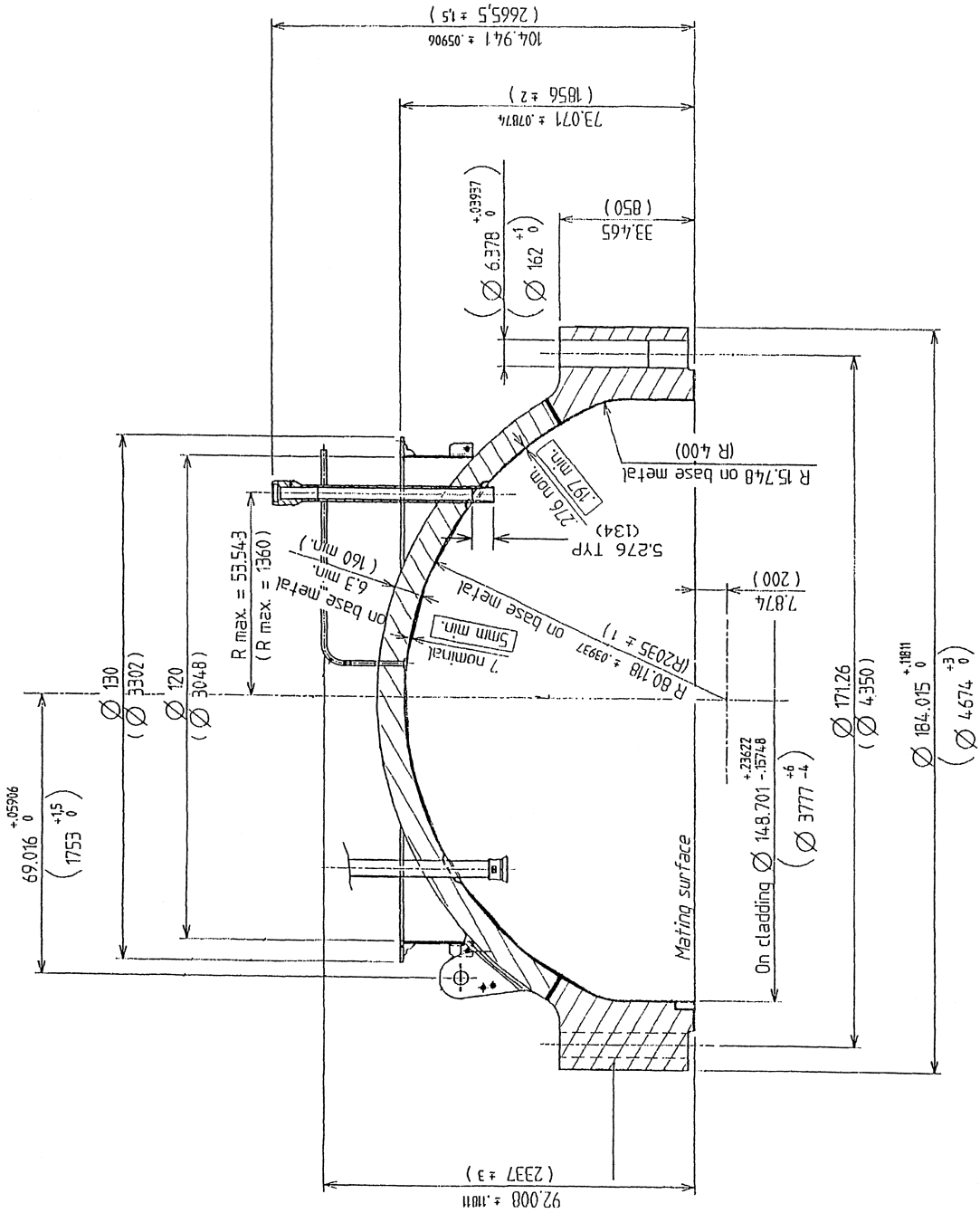

For reactor vessel dimensions see Figure 5.4-1.

Figure 5.4-3
SPECIMEN GUIDE TO THERMAL SHIELD ATTACHMENT

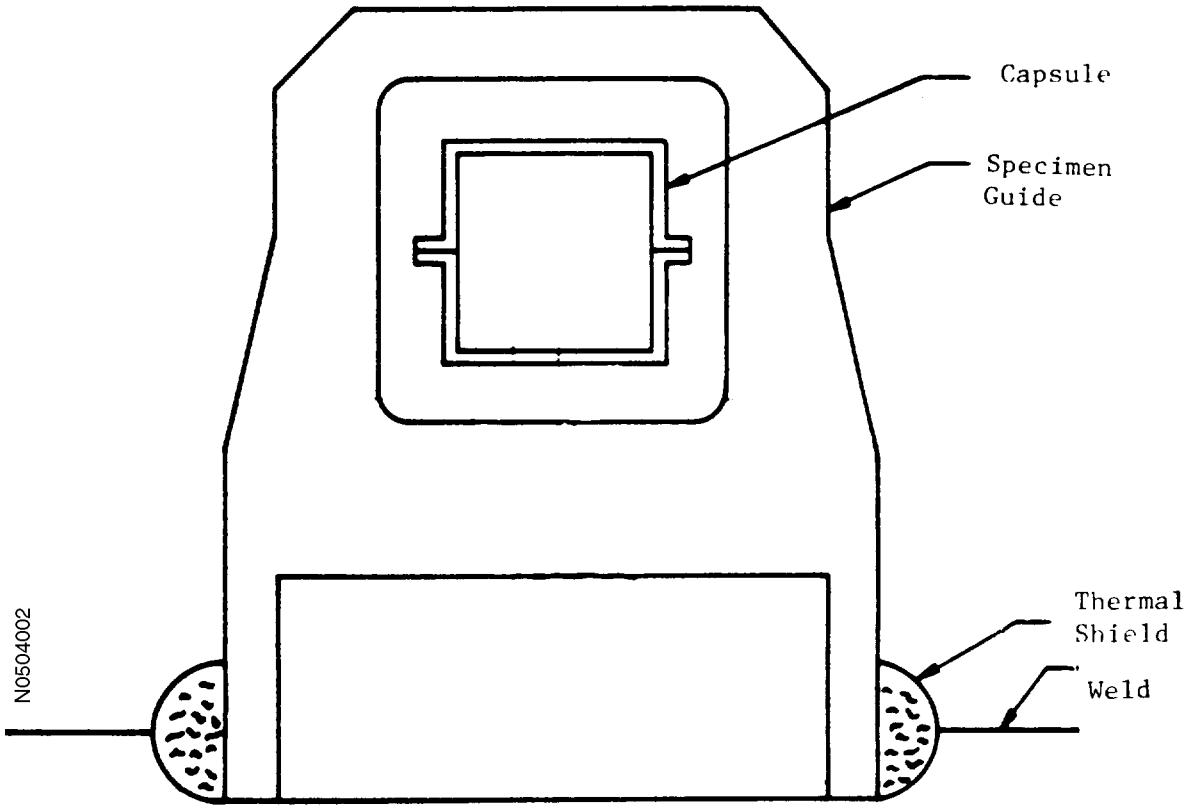

Figure 5.4-4
TYPICAL SURVEILLANCE CAPSULE ELEVATION VIEW

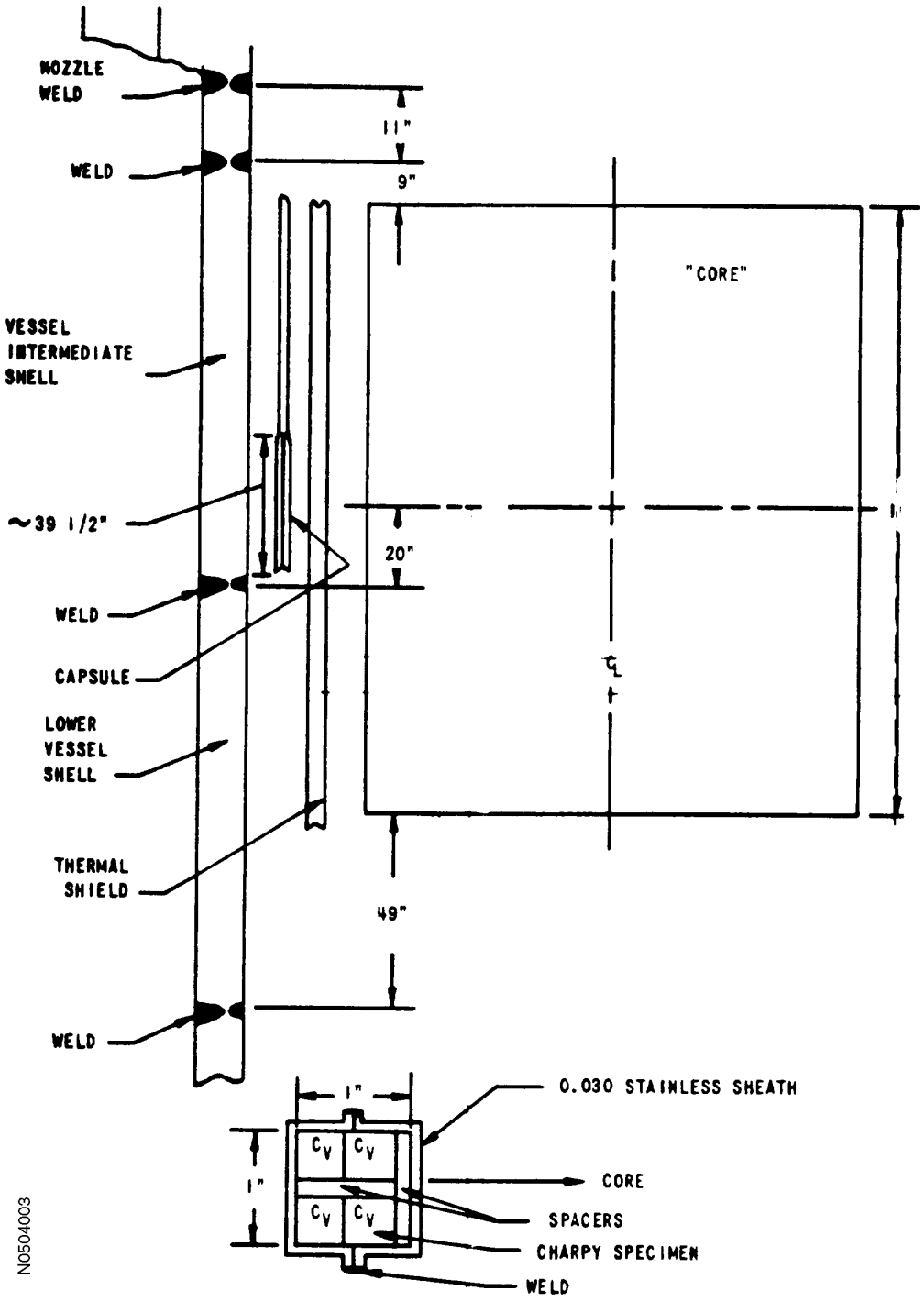

Figure 5.4-5
SURVEILLANCE CAPSULE, PLAN VIEW [a]

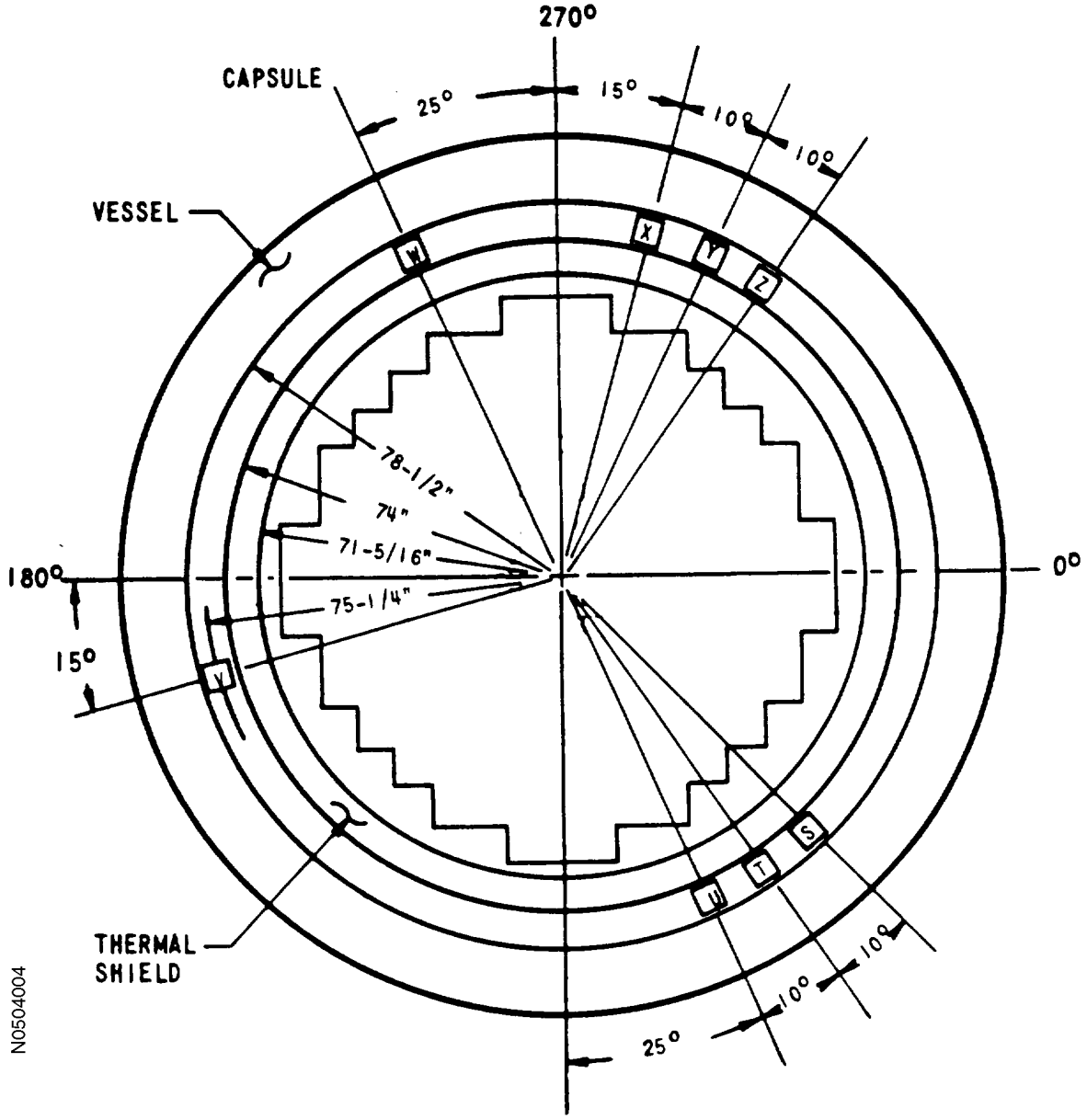

a. This figure reflects the original installation locations of the surveillance capsules.

Intentionally Blank

5.5 COMPONENT AND SUBSYSTEM DESIGN

5.5.1 Reactor Coolant Pumps

5.5.1.1 Design Bases

The reactor coolant pump ensures an adequate core cooling flow rate, and hence enough heat transfer, to maintain a DNBR greater than the applicable DNBR design limit (Section 4.4.1.1) within the parameters of operation. The required net positive suction head is less than that available by system design and operation.

Sufficient pump rotation inertia is provided by a flywheel, in conjunction with the impeller and motor assembly, to provide adequate flow during coastdown. This flow following an assumed loss of pump power provides the core with adequate cooling.

The pump is capable of operation without mechanical damage at overspeeds up to and including 125% of normal speed.

The reactor coolant pump is shown in Figure 5.5-1. The reactor coolant pump design parameters are given in Table 5.5-1.

Code and material requirements are provided in Section 5.2.

5.5.1.2 Design Description

The reactor coolant pump is a vertical, single-stage, centrifugal, shaft seal pump designed to pump large volumes of reactor coolant at high temperatures and pressures.

The pump consists of three areas from bottom to top; they are the hydraulics, the shaft seals, and the motor as follows:

1. The hydraulic section consists of an impeller, diffuser, casing, thermal barrier heat exchanger, lower radial bearing, bolting ring, motor stand, and pump shaft.
2. The shaft seal section consists of three devices: the number 1 controlled leakage, the film riding face seal, and the number 2 and number 3 rubbing face seals. These seals are contained within the main flange and seal housing.
3. The motor section consists of a vertical solid shaft, a squirrel cage induction-type motor, an oil-lubricated double Kingsbury-type thrust bearing, two oil-lubricated radial bearings, and a flywheel.

Attached to the bottom of the pump shaft is the impeller. The reactor coolant is drawn up through the impeller and discharged through passages in the diffuser and out through the discharge nozzles in the side of the casing. Above the impeller is a thermal barrier heat exchanger that limits heat transfer between hot system water and seal injection water.

High-pressure seal injection water is introduced through the thermal barrier wall. A portion of this water flows through the seals; the remainder flows down the shaft through and around the bearing and the thermal barrier, where it acts as a buffer to prevent system water from entering the radial bearing and seal section of the unit. The water-lubricated journal-type pump bearing, mounted above the thermal barrier heat exchanger, has a self-aligning spherical seat.

The thermal barrier heat exchanger is designed to provide backup cooling in case seal injection becomes unavailable. Westinghouse notified the industry in Nuclear Safety Advisory Letter NSAL 99-005 (Reference 12), that under certain circumstances the stabilization temperature of the bearing/seal annulus after a loss of seal injection may be higher than the operating limit. Even though the RCS water is cooled in the thermal barrier heat exchanger, reheating of the water will occur as it slowly flows up along the pump shaft. The equilibrium temperature reached after loss of seal injection flow is a function of seal leakoff flow. During a loss of seal injection, with low initial number 1 seal leakage, the bearing and seal operating temperature may be exceeded within 1 to 2 hours. This slow temperature transient provides operators time to respond to the loss of seal injection. Significant equipment damage of the RCP seals and leak-off line is not expected and the number 1 seal is expected to control leakage as designed. Seal failure, while not postulated for this event, is bounded by the plant's LOCA analysis.

The reactor coolant pump motor bearings are of conventional design. The radial bearings are the segmented-pad type, and the thrust bearings are tilting pad Kingsbury bearings. All are oil-lubricated. The lower radial bearing and the thrust bearings are submerged in oil, and the upper radial bearing is oil fed from an impeller integral with the thrust runner.

The motor is an air-cooled, Class B thermolastic epoxy insulated, squirrel cage induction motor. The rotor and stator are of standard construction and are cooled by air. Six resistance temperature detectors are located throughout the stator to sense the winding temperature. The top of the motor consists of a flywheel and an antireverse rotation device.

Each of the reactor coolant pumps is equipped for the continuous monitoring of reactor coolant pump shaft and frame vibration levels. Shaft vibration is measured by two relative shaft probes mounted on top of the pump seal housing. The probes, one in line with the pump discharge and the other perpendicular to the pump discharge, are mounted in the same horizontal plane near the pump shaft. Frame vibration is measured by two velocity seismoprobes located 90 degrees apart in the same horizontal plane and mounted at the top of the motor support stand. Proximeters and converters convert the probe signals to linear output that is displayed on monitor meters in the control room. The monitor meters automatically indicate the highest output from the relative probes and seismoprobes; manual selection allows the monitoring of individual probes. Indicator lights display caution and danger limits of vibration and are adjustable over the full range of the motor scale.

All parts of the pump in contact with the reactor coolant are austenitic stainless steel except for seals, bearings, and special parts. Component cooling water is supplied to the two oil coolers on the pump motor, the pump thermal barrier heat exchanger, and the stator air outlet cooler.

The pump shaft, seal housing, thermal barrier, bolting ring, and motor stand can be removed from the casing as a unit without disturbing the reactor coolant piping. The flywheel is available for inspection by removing the cover.

The performance characteristics, shown in Figure 5.5-2, are common to all of the fixed-speed mixed-flow pumps, and the "knee" at about 45% design flow introduces no operational restrictions, since the pumps operate at full speed.

Each reactor coolant pump is fitted with continuous strip-type temperature detectors located within the pump volute insulation. Any oil spill will collect in this enclosure, and if oil ignition occurs because of high pump casing temperature, an alarm will annunciate in the main control room.

5.5.1.3 **Design Evaluation**

5.5.1.3.1 Pump Performance

The reactor coolant pumps deliver flow at rates that equal or exceed the required flow rates. Initial reactor coolant system tests confirmed the total delivery capability. Thus, assurance of adequate forced circulation coolant flow was provided before initial plant operation.

The reactor trip system ensures that pump operation is within the assumptions used for loss of coolant flow analyses, which also ensures that adequate core cooling is provided to permit an orderly reduction in power if flow from a reactor coolant pump is lost during operation.

An extensive test program has been conducted for several years to develop the controlled leakage shaft seal for PWR applications. Long-term tests were conducted on less than full-scale prototype seals as well as on full-size seals. Operating plants continue to demonstrate the satisfactory performance of the controlled leakage shaft seal pump design.

The support of the stationary member of the number 1 seal ("seal ring") is such as to allow large deflections, both axial and tilting, while still maintaining its controlled gap relative to the seal runner. Even if all the graphite were removed from the pump bearing, the shaft could not deflect far enough to cause an opening of the controlled leakage gap. The "spring-rate" of the hydraulic forces associated with the maintenance of the gap is high enough to ensure that the ring follows the runner under very rapid shaft deflections.

The testing of pumps with the number 1 seal entirely removed (full reactor pressure on the number 2 seal) shows that relatively small leakage rates would be maintained for long periods of time (approximately 100 hours), even if the number 1 seal fails entirely. The plant operator is

warned of this condition by the increase in number 1 seal leakoff and has time to close this line and conduct a safe plant shutdown without significant leakage of reactor coolant to the containment. Thus, it may be concluded that gross leakage from the pump does not occur, even if seals were to suffer physical damage.

The effect of loss of offsite power on the pump itself is to cause a temporary stoppage in the supply of injection flow to the pump seals and also of the cooling water for seal and bearing cooling. The emergency diesel generators are started automatically when there is a loss of offsite power so that component cooling flow is automatically restored. Seal water injection flow is also automatically restored since the charging pump does not need to be manually restarted.

5.5.1.3.2 Coastdown Capability

It is important to reactor operation that the reactor coolant continues to flow for a short time after reactor trip. To provide this flow in a station blackout condition, each reactor coolant pump is provided with a flywheel. Thus, the rotating inertia of the pump, motor, and flywheel is used during the coastdown period to continue the flow of reactor coolant. The coastdown flow transients are provided in the figures in Section 15.3.

The pump is designed for the design-basis earthquake, and the integrity of the bearings is described in Section 5.5.1.3.4. The coastdown capability of the pumps is maintained even under the most adverse case of a blackout coincident with the design-basis earthquake.

5.5.1.3.3 Flywheel Integrity

The demonstration of integrity of the reactor coolant pump flywheel is discussed in Section 5.2.3.3.3.

5.5.1.3.4 Bearing Integrity

The design requirements for the reactor coolant pump bearings are primarily aimed at ensuring a long life with negligible wear, so as to give accurate alignment and smooth operation over long periods of time. To this end, the surface-bearing stresses are held very low, and even under the most severe seismic transients do not begin to approach loads that cannot be carried adequately for short periods of time.

Because there are no established criteria for short-time stress-related failures in such bearings, it is not possible to make a meaningful quantification of such parameters as margins to failure and safety factors. A qualitative analysis of the bearing design, embodying such considerations, gives assurance of the adequacy of the bearing to operate without failure.

Low oil levels in the motor bearings signal an alarm in the control room. Each motor bearing contains embedded temperature detectors, and so an initiation of failure, separate from a loss of oil, is indicated and alarmed in the control room as a high bearing temperature. High bearing temperature requires the pump to be shutdown. Even if these indications are ignored, and

the bearing proceeded to fail, the low melting point of Babbitt metal on the pad surfaces ensures that no sudden seizure of the bearing will occur. In this event, the motor continues to drive, as it has sufficient reserve capacity to operate even under such conditions. However, it demands excessive currents and at some stage is shut down because of high current demand.

The reactor coolant pump shaft is designed so that its critical speed is well above the operating speed.

5.5.1.3.5 Locked Rotor

It may be hypothesized that the pump impeller might severely rub on a stationary member and then seize. Analysis has shown that under such conditions, assuming instantaneous seizure of the impeller, the pump shaft fails in torsion just below the coupling to the motor, disengaging the flywheel and motor from the shaft. This constitutes a loss-of-coolant flow in the loop. Following such a postulated seizure, the motor continues to run without any overspeed, and the flywheel maintains its integrity, as it is still supported on a shaft with two bearings. Flow transients for the assumed locked rotor are provided in the figures in Section 15.4.

There are no credible sources of shaft seizure other than impeller rubs. Any seizure of the pump bearing is precluded by graphite in the bearing. Any seizure in the seals results in a shearing of the antirotation pin in the seal ring. The motor has enough power to continue pump operation even after the above occurrences. Indications of pump malfunction in these conditions are initially by high temperature signals from the bearing water temperature detector and excessive number 1 seal leakoff signals. Following these signals, pump vibration levels are checked. Excessive vibration indicates mechanical trouble and the pump is shut down for investigation.

5.5.1.3.6 Critical Speed

It is considered desirable to operate below first critical speed, and the reactor coolant pumps are designed in accordance with this philosophy. This results in a shaft design that, even under the most severe postulated transient, gives very low values of actual stress.

Both the damped and lateral natural frequencies are determined by establishing a number of shaft sections and applying weights and moments of inertia for each section bearing spring and damping data. The torsional natural frequencies are similarly determined. The lateral and torsional natural frequencies are greater than 120% and 110% of the running speed, respectively.

5.5.1.3.7 Missile Generation

Each component of the pump is analyzed for missile generation. Any fragments of the motor rotor would be contained by the heavy stator. The same conclusion applies to the pump impeller because the small fragments that might be ejected would be contained by the heavy casing. The pump flywheel is discussed in Section 5.2.3.3.

5.5.1.3.8 Pump Cavitation

The minimum net positive suction head required by the reactor coolant pump at running speed is approximately 170 feet of water (approximately 85 psi). In order for the controlled leakage seal to operate correctly, it is necessary to have a differential pressure of approximately 200 psi across the seal. This is taken into consideration in the operating instructions. At this differential pressure, the net positive suction head requirement is exceeded and no limitation on pump operation occurs from this source.

5.5.1.3.9 Pump Overspeed Considerations

For turbine trips actuated by either the reactor trip system or the turbine protection system, the generator and reactor coolant pumps are maintained connected to the external network for 30 seconds to maintain pump speed.

An electrical fault requiring immediate trip of the generator (with resulting turbine trip) could result in an overspeed condition. The turbine control system and the turbine intercept valves limit the overspeed to less than 120%. As additional backup, the turbine protection system has a mechanical overspeed protection trip usually set at about 111%.

5.5.1.3.10 Antireverse Rotation Device

Each of the reactor coolant pumps is provided with an antireverse rotation device in the motor. This device consists of 11 pawls mounted on the outside diameter of the flywheel, a serrated ratchet plate mounted on the motor frame, a spring return for the ratchet plate, and 2 shock absorbers.

After the motor has come to a stop, one pawl engages the ratchet plate and, as the motor tends to rotate in the opposite direction, the ratchet plate also rotates until stopped by the shock absorbers. The rotor remains in this position until the motor is energized again. After the motor has come up to speed, the ratchet plate is returned to its original position by the spring return.

When the motor is started, the pawls drag over the ratchet plate until the motor reaches approximately 70 rpm. At this time, centrifugal forces acting on the pawls produce enough friction to prevent the pawls from rotating, and thus hold the pawls in the elevated position until the speed falls below the above value. Considerable shop testing and plant experience with the design of these pawls have shown high reliability of operation.

5.5.1.3.11 Shaft Seal Leakage

Leakage along the reactor coolant pump shaft is controlled by three shaft seals arranged in series such that reactor coolant leakage to the containment is essentially zero. Charging flow is directed to each reactor coolant pump via a seal-water injection filter. The seal-water injection filter has a range of filter sizes from 0.1 to 5.0 microns. The filter design retention capability is controlled by administrative processes that provide a filter change-out strategy. The size filter

installed is dependent on plant status (e.g., shutdown, startup, or normal operations) and the amount of cleanup required. It enters the pumps through the seal housing. Here the flow splits and a portion enters the reactor coolant system via the pump shaft bearing and the thermal barrier cooler cavity. The remainder of the flow flows up the pump shaft (cooling the lower bearing) and leaves the pump via the number 1 seal where its pressure is reduced to that of the volume control tank. The water from each pump seal assembly is piped to a common manifold and then via a seal water filter through a seal water heat exchanger where the temperature is reduced to about that of the volume control tank. Leakage past the number 1 seal provides a constant pressure on the number 2 seal and constant pressure on the number 3 seal. A standpipe is provided to ensure a backpressure of at least 7 feet of water on the number 3 seal and warn of excessive number 2 seal leakage. The first outlet from the standpipe has an orifice to permit normal number 2 seal leakage to flow to the primary drain transfer tank; excessive number 2 leakage results in a rise in the standpipe level and eventually overflow to the primary drain transfer tank via a second overflow connection.

5.5.1.3.12 Lube Oil Collection

To reduce the chance of a fire caused by lube oil leakage onto hot piping, an oil collection system has been installed for each reactor coolant pump in both units. The system consists of leakproof cans under oil-bearing components that could leak, with covers to contain oil from pressurized systems and to preclude foreign material. The components from which leakage is collected are:

- Oil lift pumps (pressurized lines).
- Oil cooler (pressurized lines and housing).
- Oil level indicators.
- Oil fill and drain points.
- Flanged connections for the lower oil reservoir.
- Sight glasses.
- All flanged oil bearing connections.

Leakage from these components will be collected by five enclosures on each RCP motor. Each of the oil collection enclosures is connected to a header with a flexible hose; the header pipe drains the oil to a tank below the enclosures. This drain tank is sized to contain the total inventory of the motor.

5.5.1.4 **Tests and Inspections**

Pump support feet are cast integral with the casing to eliminate a weld region.

The pump design enables disassembly and removal of the pump internals for usual access to the internal surface of the pump casing.

Inservice inspection is discussed in Section 5.2.5.

The reactor coolant pump quality assurance program is given in Table 5.5-2.

The following information is HISTORICAL and is not intended or expected to be updated for the life of the plant.

5.5.1.4.1 Electroslag Welding

Reactor coolant pump casings fabricated by electroslag welding were qualified as follows:

1. The electroslag welding procedure employing the two- and three-wire technique was qualified in accordance with the requirements of the ASME Code, Sections III and IX, 1965, and ASME Code Case 1355 plus supplementary evaluations as requested by WNES-PWRSD. The following test specimens were removed from an 8-inch-thick and from a 12-inch-thick weldment and successfully tested for both the two-wire and the three-wire techniques, respective. They are as follows:

   a. Two-wire electroslag process - 8-inch-thick weldment.

      1) Six transverse tensile bars - 750°F post-weld stress relief.

      2) Twelve guided side bend test bars.

   b. Three-wire electroslag process - 12-inch-thick weldment.

      1) Six transverse tensile bars - 750°F post-weld stress relief.

      2) Seventeen side bend test bars.

      3) Twenty-one Charpy V-notch specimens.

      4) Full-section macroexamination of weld and heat-affected zone.

      5) Numerous microscopic examinations of specimens removed from the weld and heat-affected zone regions.

      6) Hardness survey across weld and heat-affected zone.

c. A separate weld test was made using the two-wire electroslag technique to evaluate the effects of a stop and restart of welding by this process. This evaluation was performed to establish proper procedures and techniques as such an occurrence was expected during production applications due to equipment malfunction, power outages, etc. The following test specimens were removed from an 8-inch-thick weldment in the stop-restart-repaired region and successfully tested. They are as follows:

   1) Two transverse tensile bars - as welded.

   2) Four guided side bend test bars.

   3) Full-section macroexamination of weld and heat-affected zone.

d. All of the weld test blocks in a, b, and c above were radiographed using a 24-MeV Betatron. The radiographic quality level as defined by ASTM E-94 obtained was between one-half of 1% and 1%. There were no discontinuities evident in any of the electroslag welds.

e. The casting segments were surface conditioned for 100% radiographic and penetrant inspections. The radiographic acceptance standards were ASTM E-186 severity level two except no category D or E defectiveness was permitted for section thickness up to 4.5 inches. The penetrant acceptance standards were ASME Code, Section III, paragraph N-627, 1965.

2. The edges of the electroslag weld preparations were machined. These surfaces were penetrant inspected before welding. The acceptance standards were ASME Code, Section III, paragraph N-627, 1968.

3. The completed electroslag weld surfaces were ground flush with the casting surface. Then, the electroslag weld and adjacent base material were 100% radiographed in accordance with ASME Code Case 1355. Also, the electroslag weld surfaces and adjacent base material were penetrant inspected in accordance with ASME Code, Section III, paragraph N-627, 1968.

4. Weld metal and base metal chemical and physical analyses were determined and certified.

5. Heat treatment furnace charts were recorded and certified.

5.5.1.4.2 In-Process Control of Variables

There were many variables that had to be controlled in order to maintain desired quality welds. These, together with an explanation of their relative importance, were as follows:

5.5.1.4.2.1 Heat Input Versus Output. The heat input was determined by the product of volts times current, measured by voltmeters and ammeters that were considered accurate, as they were calibrated every 30 days. During any specific weld, these meters were constantly monitored by the operators.

The ranges specified were 500 to 620A and 44 to 50V. The correct amperage variation, even though it was less than ASME Code Case 1355 allowed, was necessary for the following reasons:

1. The thickness of the weld was in most cases the reason for changes.
2. The weld gap variation during the weld cycle also required changes. For example, the procedure qualifications provided for welding thicknesses from 5 to 11 inches with two wires. The current and voltage were varied to accommodate this range.
3. Also, the weld gap was controlled by spacer blocks. These blocks were removed as the weld progressed. Each time a spacer block was removed there was the chance of the weld pinching down to as little as 1 inch or opening to perhaps as much as 1.5 inches. In either case, a change in current may have been necessary.
4. The heat output was controlled by the heat sink of the section thickness and metered water flow through the water-cooled shoes. The nominal temperature of the discharged water was 100°F.

5.5.1.4.2.2 Weld Gap Configuration. As previously mentioned, the weld gap configuration was controlled by 1.25-inch spacer blocks. As these blocks were removed there was the possibility of gap variation. It was found that a variation from 1 to 1.75 inches was not detrimental to weld quality as long as the current was adjusted accordingly.

5.5.1.4.2.3 Flux Chemistry. The flux used for welding was Arcos BV-I Vertomax. This was a neutral flux whose chemistry was specified by the Arcos Corporation. The molten slag was kept at a nominal depth of 1.75 inches and may have varied in depth by plus or minus 3/8 inch without affecting the weld. This was measured by a stainless steel dipstick.

5.5.1.4.2.4 Weld Cross-Section Configuration. The higher the current or heat input and the lower the heat output, the greater the dilution of weld metal with base metal, causing a more round barrel-shaped configuration as compared to welding with less heat input and higher heat output. This cut the amount of dilution to provide a more narrow barrel-shaped configuration. This was also a function of section thicknesses; the thinner the section, the more round the pattern that was produced.

5.5.1.4.3 Welder Qualification

Welder qualification in accordance with ASME Code, Section IX, 1965, was required, using transverse side bend test specimens per Table Q.24.1.

5.5.2 Steam Generator

5.5.2.1 Design Bases

Steam generator design data are given in Table 5.5-3. The design sustains transient conditions given in Section 5.2.1. Estimates of radioactivity levels expected in the secondary side of the steam generators during normal operation, and the bases for the estimates, are given in Chapter 11. The rupture of a steam generator tube is discussed in Chapter 15.

The internal moisture separation equipment is designed to ensure that moisture carryover does not exceed 0.10% by weight, for steady-state operation up to 100% of full-load steam flow, with water at the normal operating level.

The steam generator tubesheet complex meets the stress limitations and fatigue criteria specified in the ASME Code, Section III, as well as emergency condition limitations specified in Section 5.1. Codes and material requirements for the steam generator are given in Section 5.2.

The steam generator design maximizes integrity against hydrodynamic excitation and failure of the tubes for plant life.

The water chemistry in the reactor side is selected to provide the necessary boron content for reactivity control and to minimize the corrosion of reactor coolant system surfaces.

5.5.2.2 Design Description

The steam generator shown in Figure 5.5-3 is a vertical shell and U-tube evaporator with integral moisture separating equipment. The reactor coolant flows through the inverted U-tubes, entering and leaving through the nozzles located in the hemispherical bottom head of the steam generator. The head is divided into inlet and outlet chambers by a vertical partition plate extending from the head to the tubesheet. Manways are provided for access to both sides of the divided head. Steam is generated on the shell side and flows upward through the moisture separators to the outlet nozzle at the top of the vessel. The unit is primarily low alloy steel. The heat-transfer tubes

are thermally treated Ni-Cr-Fe Alloy UNS N06690 and the channel head divider plate is a Ni-Cr-Fe Alloy (UNS N06600 for Unit 1 and UNS NO6690 for Unit 2). The interior surfaces of the reactor coolant channel head are weld clad with austenitic stainless steel. The primary side interior surfaces of the tubesheet are weld clad with Ni-Cr-Fe Alloy UNS N06082.

Feedwater flows from a feedring into the annulus formed by the shell and tube bundle wrapper before entering the boiler section of the steam generator. Subsequently, a water-steam mixture flows upward through the tube bundle and into the steam drum section. A set of centrifugal moisture separators, located above the tube bundle, removes most of the entrained water from the steam. Steam dryers increase the steam quality to a minimum of 99.90% (0.10% moisture). The moisture separators recirculate water that mixes with feedwater as it passes through the annulus formed by the shell and tube bundle wrapper.

The steam drum has two flange-bolted and gasketed access openings for inspection and maintenance of the dryer vane assembly, which can be disassembled and the vanes removed through the opening.

Two 4.0-inch inspection ports located 180° apart have been machined through the steam generator shell and wrapper above the top tube support plate to provide access for visual inspection of the inner row tube U-band region.

5.5.2.3 **Design Evaluation**

5.5.2.3.1 Forced Convection

The limiting case for heat-transfer capability is the “nominal 100% design” case. The steam generator effective heat-transfer coefficient is based on the coolant conditions of temperature and flow for this case, and includes a conservative allowance for tube fouling. Enough tube area is selected to ensure that the full design heat removal rate is achieved.

5.5.2.3.2 Natural-Circulation Flow

The steam generators that provide a heat sink are at a higher elevation than the reactor core, which is the heat source. Thus, natural circulation of reactor coolant is ensured for the removal of decay heat.

5.5.2.3.3 Tube and Tubesheet Stress Analyses

Tube and tubesheet stress analyses of the steam generator are given in Section 5.2.

Calculations confirm that the steam generator tubesheet will withstand the loading (which is quasistatic rather than a shock loading) caused by a loss of reactor coolant.

5.5.2.3.4 Corrosion

In sizing components, design formulas take into account allowances for general corrosion. These allowances are based on corrosion tests on representative materials in simulated primary and secondary side environments. Conservative design basis allowances for ferritic and stainless steels and Ni-Cr-Fe Alloy 600 are summarized in WNEP-8661, Rev. 1. Corrosion allowances established for Ni-Cr-Fe Alloy 600 provide conservative upper limits for corrosion losses in Ni-Cr-Fe Alloy 690. Corrosion tests (EPRI Report NP-6997-SD) on Alloy 690TT tubes exposed to simulated primary water coolant at 330°C for 1500 hours showed an average metal loss to the stream of 0.011383 mg/dm^2/day, and an average total descaled metal loss 0.0425 mg/dm^2/day. The latter descaled metal loss corresponds to 0.0072 mils per year, or 0.44 mils in 60 years, which is insignificant compared to the minimum tube wall thickness. The general corrosion loss in secondary side AVT water chemistry is expected to be equally low.

Extensive corrosion testing of thermally treated Alloy 690 tubing (EPRI Report NP-6997-SD) has shown that Alloy 690 is (i) virtually immune to primary water stress corrosion cracking, (ii) extremely resistant to stress corrosion cracking in secondary side AVT water chemistry, and (iii) is resistant to secondary side faulted off-chemistry conditions.

Chemistry control of steam generator water to minimize corrosive attack on the steam generator components is discussed in Section 10.4.3.2.

5.5.2.3.5 Flow-Induced Vibration

In the design of Westinghouse Model 51F steam generators used at North Anna Power, the possibility of tube degradation due to either mechanical or flow-induced excitation was considered. This evaluation included detailed analysis of the tube support systems as well as an extensive research program with tube vibration model tests.

Consideration was given to potential sources of tube excitation including primary fluid flow within the U-tubes, mechanically-induced vibration, and secondary fluid flow on the outside of the tubes. The effects of primary fluid flow and mechanically-induced vibration are considered to be negligible during normal operation. The primary source of potential tube degradation due to vibration is the hydrodynamic excitation by the secondary fluid on the outside of the tubes, and this area has been emphasized in both analyses and tests, including evaluation of steam generator operating experience.

Three potential tube vibration mechanisms due to hydrodynamic excitation by the secondary fluid on the outside of the tubes have been identified and evaluated. These include potential flow-induced vibrations resulting from vortex shedding, turbulence, and fluidelastic vibration mechanisms.

Vortex shedding is possible, at most, only for the outer few rows in the wrapper inlet region of steam generators such as the Model 51F for which non-uniform, two-phase turbulent flow

exists throughout most of the tube bundle. Moderate tube response caused by vortex shedding is observed in some carefully controlled laboratory tests on idealized tube arrays. However, no evidence of tube response caused by vortex shedding is observed in steam generator scale model tests simulating the wrapper inlet region. Bounding calculations consistent with laboratory test parameters confirmed that vibration amplitudes would be acceptably small, even if the carefully controlled laboratory conditions were unexpectedly reproduced in the steam generator.

Flow-induced vibrations due to flow turbulance are also small; root mean square amplitudes are less than allowances used in tube sizing. These vibrations cause stresses which are two orders of magnitude below fatigue limits for the tubing material. Therefore, neither unacceptable tube wear nor fatigue degradation is anticipated due to secondary flow turbulance in the Model 51F design configuration.

Fluidelastic tube vibration is potentially more severe than either vortex shedding or turbulance because it is a self-excited mechanism: relatively large tube amplitudes can feedback proportional driving forces if an instability threshold is exceeded. Tube support spacing incorporated into design of both the tube support plates and the anti-vibration bars in the U-bend region provides tube response frequencies such that the instability threshold is not exceeded for secondary fluid flow conditions. This approach provides large margins against initiation of fluidelastic vibration for tubes which are effectively supported by the Model 51F tube support configuration.

Small clearances between the tubes and supporting structure are required for steam generator fabrication. These clearances introduce the potential that any given tube support location may not be totally effective in restraining tube motion if there is a finite gap around the tube at that location. Fluidelastic tube response within available support clearances is therefore theoretically possible if secondary flow conditions exceed the instability threshold assuming no support at the location with a gap around the tube.

This potential has been investigated both with tests and analyses for the U-bend region where secondary flow conditions have the potential to exceed the instability threshold if a tube does not contact two or more sequential supports as a result of fabrication tolerances. Tube vibration response is shown to have wear potential within available design margins even for limiting tube fitup conditions which are not expected. Corresponding tube bending stresses remain more than an order of magnitude below fatigue limits as a consequence of vibration amplitudes constrained by available clearances. These analyses and tests for limiting postulated fitup conditions include simultaneous contributions from flow turbulence.

Potential tube fatigue subject to postulated conservative tube support, material, and environmental conditions has also been evaluated to demonstrate added margin against rapidly propagating fatigue. Reduced damping, due to postulated clamped conditions at the top tube supports and at anti-vibration bars (AVBs) in the U-bend region, does not result in fluidelastic

instability for small radius tubes as a result of the consistently controlled depth of AVB insertion which is deeper than that of previous operating steam generators. Postulated combinations of tube clamping and adjacent support with clearances for larger radius tubes do not lead to tube stresses above fatigue limits which have been reduced below ASME Code limits to address postulated material and environmental degradation.

Analysis and tests therefore demonstrate that unacceptable tube degradation resulting from tube vibration is not expected for the 51F steam generators at North Anna Power Station. Operating experience with similar steam generators supports this conclusion.

5.5.2.4 **Tests and Inspections**

The steam generator quality assurance program is given in Table 5.5-4.

Radiographic inspection and acceptance standard are in accordance with the requirements of Section III of the ASME Code, 1986.

Liquid penetrant inspection is performed on weld-deposited tubesheet cladding, channel head cladding, tube-to-tubesheet weldments, and weld-deposited cladding. Liquid-penetrant inspection and acceptance standards are in accordance with the requirements of Section III of the ASME Code, 1986.

Magnetic particle inspection is performed on the tubesheet forging, channel head forging, shell forging, nozzle forgings, and the following weldments:

1. Nozzle to shell.
2. Structural attachments.
3. Instrument connections (primary and secondary).
4. Vessel surfaces after temporary attachments removal.
5. All accessible pressure retaining welds after hydrostatic test.

Magnetic particle inspection and acceptance standards are in accordance with the requirements of Section III of the ASME Code, 1986.

An ultrasonic test is performed on the channel head and tubesheet forgings, channel head and tubesheet cladding, secondary forgings, shell and head plates, and nozzle forgings.

The heat-transfer tubing is subjected to eddy current test.

Hydrostatic tests were performed in accordance with Section III of the ASME Code, 1986. In addition, the heat-transfer tubes are subjected to a hydrostatic test pressure, before installation into the vessel, which is not less than 1.25 times the primary-side design pressure.

Manways are provided to access both the primary and secondary sides.

The steam generator tubes are inspected in accordance with the Technical Specifications.

5.5.3 Reactor Coolant Piping

5.5.3.1 Design Bases

The reactor coolant system piping is designed and fabricated to accommodate the system pressures and temperatures attained under all expected modes of plant operation or expected system interactions. Code and material requirements are provided in Section 5.2.

Materials of construction are specified to minimize corrosion/erosion and ensure compatibility with the operating environment.

The piping in the reactor coolant system pressure boundary is designed and fabricated in accordance with B31.7, 1969. However, reanalysis of the pressurizer surge line to account for the effect of thermal stratification and striping was performed in accordance with the requirements of ASME Boiler and Pressure Vessel Code, Section III, 1986 and addenda through 1987 incorporating high cycle fatigue as required by NRC Bulletin 88-11.

5.5.3.2 Design Description

Principal design data for the reactor coolant piping are given in Table 5.5-5.

The reactor coolant system piping is specified in the smallest sizes consistent with system requirements. In general, high fluid velocities are used to reduce piping sizes. This design philosophy results in the reactor inlet and outlet piping diameters given in Table 5.5-5. The line between the steam generator and the pump suction is larger to reduce pressure drop and improve flow conditions to the pump suction.

The reactor coolant piping and fittings are cast. Cast sections of large 90-degree elbows are joined by electroslag welds. All materials are austenitic stainless steel. All smaller piping that comprises part of the reactor coolant system boundary, such as the pressurizer surge line, spray and relief line, loop drains, and connecting lines to other systems, are also austenitic stainless steel. The nitrogen supply line for the pressurizer relief tank is carbon steel. All joints and connections are welded, except for the pressurizer code safety valves, where flanged joints are used. Thermal sleeves were originally installed at points in the system where high thermal stresses could develop from rapid changes in fluid temperature during normal operational transients. These points included the following:

1. Charging connections at the primary loop from the chemical and volume control system, including loop fill connections.
2. All accumulator discharge lines and the return line connections from the residual heat removal system at the reactor coolant loops.

3. Both ends of the pressurizer surge line.
4. Pressurizer spray line connection at the pressurizer.
5. Six-inch cold-leg safety injection nozzles.

The accumulator discharge lines, as noted above, are also used as the return line connections for the residual heat removal system. Because that system is expected to be in operation many times throughout the life of the plant (see Section 5.2.1) these lines were equipped with thermal sleeves to reduce the thermal stresses that could develop when the residual heat removal system is put into operation. The other ECCS injection connections are not expected to be in use during normal operation and, as such, are not expected to experience a large number of cycles of thermal stresses. Consequently, the connections are not equipped with thermal sleeves.

Some of the thermal sleeves have been removed because of weld defects discovered during operation. Details are given in Section 5.5.3.2.1 below.

All piping connections from auxiliary systems are made above the horizontal centerline of the reactor coolant piping, with the exception of the following:

1. Residual heat removal pump suction, which is 45 degrees down from the horizontal centerline. This enables the water level in the reactor coolant system to be lowered in the reactor coolant pipe while continuing to operate the residual heat removal system, should this be required for maintenance.
2. Loop drain lines and the connection for temporary measurement of water in the reactor coolant system during refueling and maintenance operation.
3. The differential-pressure taps for flow measurement are downstream of the steam generators on the first 90-degree elbow. The tap arrangement is discussed in the instrumentation section of this description.

Penetrations into the coolant flow path are limited to the following:

1. The spray line inlet connections extend into the cold-leg piping in the form of a scoop so that the velocity head of the reactor coolant loop flow adds to the spray driving force.
2. The reactor coolant sample system taps protrude into the main stream to obtain a representative sample of the reactor coolant.
3. The resistance temperature detector hot-leg connections are scoops that extend into the reactor coolant to collect a representative temperature sample for the resistance temperature detector.
4. The wide-range temperature detectors are located in resistance temperature detector wells that extend into the reactor coolant pipes.

Three thermowell mounted resistance temperature detectors are installed in the hot leg scoops of each loop near the inlet to the steam generator for reactor protection and control. The scoops are 120 degrees apart in the cross-sectional plane of the reactor coolant leg, and extended into the pipe to sample the flow.

One thermowell mounted resistance temperature detector is installed in the cold leg nozzle of each loop at the discharge of the reactor coolant pump for reactor protection and control.

Signals from these instruments are used to compute the reactor coolant delta T (temperature of the hot leg, T_{hot}, minus the temperature of the cold leg, T_{cold}) and an average reactor coolant temperature (T_{avg}). The T_{avg} for each loop is indicated on the main control board.

The reactor coolant system piping includes those sections of piping interconnecting the reactor vessel, steam generator, and reactor coolant pump. It also includes the following:

1. Charging line and alternate charging line from the isolation valve up to the branch connections on the reactor coolant loop.
2. Letdown line and excess line from the branch connections on the reactor coolant loop to the isolation valve.
3. Pressurizer spray lines from the reactor coolant cold legs to the spray nozzle on the pressurizer vessel.
4. Residual heat removal lines to or from the reactor coolant loops up to the designated isolation valve.
5. Safety injection lines from the designated isolation or check valve to the reactor coolant loops.
6. Accumulator lines from the designated isolation or check valve to the reactor coolant loops.
7. Loop fill, loop drain, sample, and instrument lines to or from the designated isolation valve to or from the reactor coolant loops.
8. Pressurizer surge line from one reactor coolant loop hot leg to the pressurizer vessel inlet nozzle.
9. Resistance temperature detector scoop element, pressurizer spray scoop, sample connection with scoop, reactor coolant temperature element installation boss, and the temperature element well itself.
10. All branch connection nozzles attached to reactor coolant loops.
11. Pressure relief lines from nozzles on top of the pressurizer vessel up to and through the power-operated pressurizer relief valves and pressurizer safety valves.

12. Seal injection water and labyrinth differential-pressure lines to or from the reactor coolant pump inside reactor containment.
13. Auxiliary spray line from the isolation valve to the pressurizer spray line headers.
14. Sample lines from pressurizer to the isolation valve.
15. Loop bypass lines.

Details of the materials of construction and codes used in the fabrication of reactor coolant piping and fittings are discussed in Section 5.2.

5.5.3.2.1 Thermal Sleeve Modification

During an investigation of the thermal sleeves located in the nozzles to the reactor coolant loops, it was discovered that, in some cases, the welds that attach the thermal sleeves to the inside of the respective nozzles were not intact. The loss of the welds creates the potential for the sleeves to slide down or fall into the loop piping. The affected thermal sleeves for Units 1 and 2 are shown in Table 5.5-6. The resolution of this problem was to remove from the reactor coolant system piping the thermal sleeves identified in Table 5.5-6. The piping sections for the nozzles in the Unit 1, 3-inch charging line, 12-inch accumulator line, and the four Unit 2 lines listed in Table 5.5-6 were cut away to remove the thermal sleeves, and were welded back in place after the inside of the nozzle was examined for surface damage, repaired as necessary, and wall thickness verified. The thermal sleeve in the 6-inch Loop 1 cold leg safety injection line had become loose and was retrieved from the reactor coolant system.

Since both units continue operating with the rest of similar design sleeves in place, detailed evaluations on the safety aspects of operation with affected thermal sleeves were performed and submitted to the NRC (References 1 & 2) for Units 1 and 2 respectively. In addition, Vepco initiated a program of increased operator training and awareness to address the concerns of loose parts in the reactor coolant system. Reference 2 provides a description of this program.

5.5.3.3 **Design Evaluation**

Piping load and stress evaluation for normal operating loads, seismic loads, blowdown loads, and combined normal, blowdown, and seismic loads are discussed in Section 5.2.

5.5.3.3.1 Material Corrosion/Erosion Evaluation

An upper limit of about 50 ft/sec is specified for internal coolant velocity to avoid the possibility of accelerated erosion. All pressure-containing welds out to the second valve that delineates the reactor coolant pressure boundary (RCPB) are available for examination with removable insulation.

Components with stainless steel will operate satisfactorily under normal plant chemistry conditions in PWR systems, because chlorides, fluorides, and particularly oxygen, are controlled to very low levels.

Periodic analysis of the coolant chemical composition is performed to monitor the adherence of the system to desired reactor coolant water quality listed in Table 5.2-25. The maintenance of the water quality to minimize corrosion is accomplished using the chemical and volume control system and sampling system, which are described in Chapter 9.

5.5.3.3.2 Sensitized Stainless Steel

Sensitized stainless steel is discussed in Section 5.2.3

5.5.3.3.3 Contaminant Control

Contamination of stainless steel and Inconel by copper, low-melting temperature alloys, mercury, and lead is prohibited.

Before the application of thermal insulation, the surfaces of austenitic stainless steel pipe are cleaned using approved site cleaning procedures. These procedures ensure that chlorides, fluorides, and other chemical contaminants will be eliminated or reduced to very low levels where they will not affect plant safety.

5.5.3.4 **Tests and Inspections**

The reactor coolant system piping quality assurance program is given in Table 5.5-7. Inservice inspection is discussed in Section 5.2.5.

5.5.4 Residual Heat Removal System

The residual heat removal system transfers heat from the reactor coolant system to the component cooling system to reduce the temperature of the reactor coolant to the cold shutdown temperature at a controlled rate during the latter part of normal plant cooldown and maintains this temperature until the plant is started up again.

The residual heat removal system can also be used to transfer refueling water from the refueling cavity to the refueling water storage tank following a refueling operation.

5.5.4.1 **Design Bases**

Residual heat removal system design parameters are listed in Table 5.5-8.

The residual heat removal system is designed to remove residual heat from the core and reduce the temperature of the reactor coolant system during the second phase of plant cooldown. During the first phase of cooldown, the temperature of the reactor coolant system is reduced by

transferring heat from the reactor coolant system to the steam and power conversion system through the use of steam generators.

The residual heat removal system is placed in operation approximately 4 hours after reactor shutdown, when the temperature and pressure of the reactor coolant system are approximately 350°F and 450 psig. Assuming that two heat exchangers and two pumps are in service and that each heat exchanger is supplied with component cooling water at design flow and temperature, the residual heat removal system is designed to reduce the temperature of the reactor coolant from 350°F to 140°F within 16 hours. The heat load handled by the residual heat removal system during the cooldown transient includes residual heat from the core and reactor coolant pump heat. The design residual heat load is based on the residual heat fraction that exists at 20 hours following reactor shutdown from an extended run at full power.

5.5.4.2 **System Description**

The residual heat removal system as shown in Figure 5.5-4 and Reference Drawing 4 consists of two residual heat exchangers, two residual heat removal pumps, and the associated piping, valves, and instrumentation necessary for operational control. The inlet line to the residual heat removal system is connected to the hot leg of reactor coolant loop 1, while the return lines are connected to the cold legs of the other two reactor coolant loops.

The residual heat removal system suction line is isolated from the reactor coolant system by two motor-operated valves in series while the discharge lines are isolated by a motor-operated valve in series with a check valve in each line. The residual heat removal system is located completely inside the containment.

Interlocks are not provided or required on the motor-operated valves in the RHR discharge lines to the RCS. These valves are under administrative control to be shut whenever the RCS pressure is greater than RHR design pressure. In addition, check valves are provided downstream of the motor-operated valves to provide further isolation of the RHR system from the RCS. Periodic tests of these check valves ensure their operability.

During system operation, reactor coolant flows from the reactor coolant system to the residual heat removal pumps, through the tube side of the residual heat exchangers, and back to the reactor coolant system. The heat load is transferred in the residual heat exchangers to the component cooling water circulating through the shell side of the heat exchangers.

Coincident with reactor cooldown, heatup, or operation at cold shutdown, a portion of the reactor coolant flow may be diverted from downstream of the residual heat exchanger to the chemical and volume control system low-pressure letdown line for purification and/or pressure control. By regulating the diverted flow rate and the charging flow, the reactor coolant system pressure may be controlled. Pressure regulation is necessary to maintain the pressure range

dictated by the fracture prevention criteria requirements of the reactor vessel and by the number 1 seal differential pressure and NPSH requirements of the reactor coolant pumps.

The reactor coolant system cooldown rate is manually controlled by regulating the reactor coolant flow through the tube side of the residual heat exchangers. A line, containing a flow control valve, bypasses the residual heat exchangers and is used to maintain a constant return flow to the reactor coolant system. Instrumentation is provided to monitor system pressure, temperature, and total flow.

The residual heat removal system may also be used to drain the refueling cavity after refueling. Water is pumped back to the refueling water storage tank until the water level is lowered to the flange of the reactor vessel. The remainder is removed by the refueling purification system (Section 9.1.3) via the drain connection at the bottom of the refueling canal.

When the residual heat removal system is in operation, the water chemistry is the same as that of the reactor coolant. Provision is made for the sampling system to extract samples from the flow of reactor coolant downstream of the residual heat exchangers. A sampling point is also provided between the pumps and heat exchangers.

5.5.4.2.1 Component Description

The materials used to fabricate residual heat removal system components are in accordance with the applicable code requirements. All parts of components in contact with borated water are fabricated or clad with austenitic stainless steel or equivalent corrosion resistant material.

Component codes and classifications are given in Table 5.5-9 and component parameters are listed in Table 5.5-10.

5.5.4.2.1.1 Residual Heat Removal Pumps. Two pumps are installed in the residual heat removal system. The pumps are sized to deliver reactor coolant flow through the residual heat exchangers to meet the plant cooldown requirements. Two pumps ensure that cooling capacity is not lost should one pump become inoperative.

A recirculation line is provided from the heat exchanger to the pump suction to prevent pump overheating when the residual heat removal discharge MOVs are closed. A manual valve in the recirculation line is administratively locked in position to establish an adequate recirculation flow while ensuring cooling flow through the system.

A local pressure indicator is located immediately downstream of each residual heat removal pump to indicate the pump discharge pressure. A local pressure indicator is also located in the common discharge header downstream of the residual heat pumps to indicate the heat exchanger inlet pressure and to provide a high-pressure alarm to the annunciator located on the main control board.

The two pumps are vertical, centrifugal units with mechanical shaft seals. All pump surfaces in contact with reactor coolant are austenitic stainless steel or equivalent corrosion-resistant material.

5.5.4.2.1.2 Residual Heat Exchangers. Two residual heat exchangers are installed in the system. The heat exchanger design is based on heat load and temperature differences between reactor coolant and component cooling water existing 20 hours after reactor shutdown, when the temperature difference between the two systems is small.

The installation of two heat exchangers ensures that the heat removal capacity of the system is only partially lost if one heat exchanger becomes inoperative.

The residual heat exchangers are of the shell and U-tube type. Reactor coolant circulates through the tubes, while component cooling water circulates through the shell. The tubes are welded to the tubesheet to prevent leakage of reactor coolant.

5.5.4.2.1.3 Residual Heat Removal System Valves. Valves that perform a modulating function are equipped with two sets of packings and an intermediate leakoff connection that discharges to the drain header.

Manual and motor-operated valves have backseats to facilitate repacking and to limit stem leakage when the valves are open. Leakage connections are provided where required by valve size and fluid conditions.

As shown in Table 5.5-10, the design flow of the residual heat removal suction relief valves is 900 gpm. As installed, each valve can flow approximately 700 gpm. This installed capacity is in excess of the maximum expected charging flow for a charging/letdown mismatch event, and therefore adequate to protect the residual heat removal system from overpressurization.

5.5.4.2.2 System Operation

5.5.4.2.2.1 Reactor Start-up. Start-up encompasses the operations that bring the reactor from cold shutdown to no-load operating temperature and pressure. Generally, while at cold shutdown condition, residual heat from the reactor core is being removed by the residual heat removal system. Flow through the heat exchangers is adjusted in response to the residual heat removal load at the time.

At initiation of the plant start-up, the reactor coolant system is completely filled, and the pressurizer heaters are energized. Pressure control is achieved by balancing makeup flow to the coolant system with flow from the residual heat removal connection to letdown. This line taps off from the common header downstream of the residual heat exchanger. The failure of any of the valves in the line from the residual heat removal system to the chemical and volume control system has no safety implications, either during start-up or cooldown.

After the first reactor coolant pump is started, a pressurizer steam bubble is formed, and the residual heat removal pumps are stopped. The indication of steam bubble formation is provided in the main control room by the damping out of the reactor coolant system pressure fluctuations and by pressurizer level indication. The residual heat removal system is then isolated from the reactor coolant system and the system pressure is controlled by normal letdown and the pressurizer spray and pressurizer heaters. The remaining reactor coolant pumps are started as necessary.

5.5.4.2.2.2 Power Generation and Hot Standby Operation. During power generation and hot standby operation, the residual heat removal system is not in service. The RHR to letdown interface valve is maintained slightly open during normal operations in order to keep RHR water solid, and allow for RHR expansion and contraction due to temperature changes.

5.5.4.2.2.3 Plant Shutdown. Plant shutdown encompasses the operations that bring the reactor from hot no-load temperature and pressure to cold shutdown conditions.

The initial phase of reactor cooldown is accomplished by transferring heat from the reactor coolant system to the steam and power conversion system through the use of the steam generators.

When the reactor coolant temperature and pressure are reduced to approximately 350°F and 450 psig, approximately 4 hours after reactor shutdown, the second phase of cooldown starts with the residual heat removal system being place in operation.

The start-up of the residual heat removal system includes a warm-up period during which time reactor coolant flow through the heat exchangers is limited to minimize thermal shock. The rate of heat removal from the reactor coolant is manually controlled by regulating the coolant flow through the residual heat exchangers. By adjusting the control valve downstream of the residual heat exchangers, the mixed mean temperature of the return flow is controlled.

Coincident with the manual adjustment, the heat exchangers bypass valve is regulated to give the required total flow.

The reactor cooldown rate is limited by reactor coolant system equipment cooling rates based on allowable stress limits, as well as the operating temperature limits of the component cooling system. As the reactor coolant temperature decreases, the reactor coolant flow through the residual heat exchangers is increased.

The residual heat removal system is designed to reduce the temperature of the reactor coolant from 350°F to 140°F over a period of 16 hours. If one residual heat removal system heat exchanger is not operable, the cooldown time will increase. This increased cooldown time does not adversely affect the safe operation of the reactor.

The residual heat removal system is operated with only one pump in service. In this configuration, cooldown from 350°F to 200°F can be achieved in less than 24 hours, which meets the Technical Specification requirements for a forced cooldown. After the reactor coolant pressure

is reduced and the temperature is 140°F or lower, the reactor coolant system may be opened for refueling or maintenance.

5.5.4.2.2.4 Refueling. During refueling, the residual heat removal system is maintained in service with the number of pumps and heat exchangers in operation as required by the heat load.

Following refueling, the residual heat removal pumps may be used to drain the refueling cavity to the top of the reactor vessel flange by pumping water from the reactor coolant system to the refueling water storage tank.

5.5.4.2.2.5 Monitoring Instrumentation. Information displayed in the control room to monitor the adequacy of cooling and lubrication of RHR pumps includes the following:

1. Visual and audio alarms for low cooling water flow to the residual heat removal pumps.
2. Residual heat removal pump seal water cooler outlet temperature is provided to the control room computer.

5.5.4.3 **Design Evaluation**

5.5.4.3.1 System Availability and Reliability

The system is provided with two residual heat removal pumps and two residual heat exchangers. If one of the two pumps or one of the two heat exchangers is not operable, safe cooldown of the plant is not compromised; however, the time required for cooldown is extended.

To ensure reliability, the two residual heat removal pumps are connected to two separate electrical buses so that each pump receives power from a different source. If a total loss of offsite power occurs while the system is in service, each bus has the capability of being manually transferred to a separate emergency diesel power supply.

For Unit 1, there is a 6-foot separation between the residual heat removal pumps and an 18.5-foot separation between the residual heat removal heat exchangers. For Unit 2, the distance between the pumps is 16 feet 5 inches, and the distance between the heat exchangers is 19 feet 6 inches. There is no flammable material in the area of the pumps, other than the oil in the motors, so the loss of both pumps in a fire is not credible. To satisfy 10 CFR 50 Appendix R requirements, a radiant energy shield is installed in both units between the residual heat pump motors. The main components of the residual heat removal system are located on a separate mezzanine with adequate drainage so that any flooding from a pipe rupture will not collect in the area of the system. The residual heat removal system is located in a separate area not subject to missiles, pipe whip, or jet impingement from high-energy lines. Therefore, the system, because of separation and adequate protection from common hazards, would not be incapacitated.

Should one residual heat removal pump shaft seal fail, there will be no adverse effects on the other pump. The pumps are mounted vertically. Should shaft seal failure occur, gross leakage

along the shaft is prevented by a throttle bushing atop the seal. Any water that might work up along the shaft will be directed upward against the bottom face of the pump motor and redirected downward. Because the air intakes of the motors are at the top of the motors, the leaking water would not rise this high after hitting the underside of the motor on the leaking pump. These are the only seals in this vicinity. The capacity of the containment sump pumps is 25 gpm each.

The occurrence of a break in a residual heat removal line during a normal shutdown or heatup when in the residual heat removal mode of operation is considered highly unlikely. For example, the reactor coolant system pressure in that mode would be 450 psig compared to the residual heat removal design pressure of 600 psig. However, such an event has been analyzed for a postulated residual heat removal moderate energy line break during shutdown. The analysis is conservatively based on the break occurring within 4 hours after reactor shutdown, the reactor coolant system at 450 psig and 350°F, and the pressurizer level at 21.4%. An assessment was also made to determine the equipment necessary to mitigate a residual heat removal line break to ensure that the core is again covered.

The analysis showed that the operator has 44 minutes after the initial alarm to take any appropriate action to ensure core immersion. The analysis further established that (1) one charging/safety injection pump will provide adequate flow to sustain the system in a safe condition and (2) an initial alarm signal low-pressurizer-level deviation alarm conservatively assumed at 16.4% will occur within 30 seconds of the event initiation, followed by another alarm (low-level heater cutoff) at 15%. The analysis conservatively assessed the largest residual heat removal line that could adversely impact both residual heat removal trains simultaneously. The break area was developed consistent with moderate energy line break criteria and was established to be 0.008 ft^2. Results of the analysis confirm that the required makeup can be provided by the inservice charging/safety injection pump. Even if (1) a 10-minute delay time for operator action and (2) a single failure were assumed, they would not result in an unsafe condition. Specifically, 34 minutes should still remain available for the initiation and effective operation of necessary equipment. Moreover, it is only if the single-failure assumption is invoked that operator action to start the backup charging/safety injection pump would be necessary. The operator can initiate the starting of the pump from within the main control room and flow can be established within 1 minute. Primary coolant loss through the break will lower the level in the reactor vessel to the hot-leg nozzle elevation, assuming no charging/safety injection pump flow, at 33 minutes from break initiation. The start of charging/safety injection pump flow in 11 minutes will delay that time, and the level will stabilize at the hot-leg nozzle level until the break is isolated. Following isolation of the break, the original pressurizer level will be reestablished within 75 minutes. The operator, from within the main control room, can initiate the closure of the residual heat removal isolation valves and closure will occur within 3 minutes.

5.5.4.3.2 Overpressurization Protection

The residual heat removal system is equipped with two pressure relief valves, each sized to relieve the combined flow of all the charging pumps at the relief set pressure. These pressure relief valves also serve to relieve the maximum possible back-leakage through the valves in the discharge lines separating the residual heat removal system from the reactor coolant system.

The interlocks associated with the valves on the residual heat removal inlet line from the reactor coolant system are discussed in Section 7.6.2.

5.5.4.3.3 Radiological Considerations

Although the residual heat removal system is located inside the containment, the components are not adversely affected by the radiation levels normally present in the containment. The system is not required to operate in the post-accident containment atmosphere.

The operation of the residual heat removal system does not involve a radiation hazard for the operators because the system is controlled remotely from the main control room. If maintenance of a major component of the system is necessary, the portion of the system requiring maintenance can be isolated by closing manual valves. During the isolation of and maintenance on this portion of the system, the operator is exposed to a radiation dose from the reactor coolant in the system. At 24 hours after reaching cold shutdown conditions, the direct radiation dose received by the operator would be within 10 CFR 20 occupational limitations.

5.5.4.3.4 Cooldown Using Natural Convection

The reactor coolant system is capable of being cooled via natural convection.

The following information is HISTORICAL and is not intended or expected to be updated for the life of the plant.

Diablo Canyon and Salem are prototypical of North Anna, and tests conducted at Diablo Canyon demonstrate the ability to cool down to the residual heat removal initiation by natural convection. The currently suggested time limit of 36 to 48 hours to the residual heat removal cut-in point seems reasonable, barring unforeseen difficulties, but prototype testing at Diablo Canyon will verify the time required for this operation.

North Anna Unit 2 successfully completed the “natural circulation boron mixing and cooldown” test in March 1982. The test was initiated following an orderly shutdown from 100% power for the first refueling outage. The reactor coolant was in stable condition throughout the test. Natural circulation flow developed smoothly after tripping the reactor coolant pumps. Reactor coolant system pressure was easily controlled with pressurizer heaters and auxiliary spray. The ability to uniformly borate and cool down the reactor coolant system was

demonstrated. The core exit thermocouples showed no evidence of radial tilt. The acceptance criteria of the test were met.

North Anna, since it has only one residual heat removal suction line containing two safety-grade series valves for tie-in of the reactor coolant system to the residual heat removal, might be constrained by the mechanical failure of one of these valves to open to affect the final tie-in. In this case, the cooldown by natural convection would be continued as far as possible below the 350°F/450 psig normal tie-in point, the reactor coolant system would be depressurized as far as practical, efforts would be made to open the stuck valve (via handwheel, thermocycling, etc.), while steam dump via the steam generators is continued.

The probability of a failure of one of these valves is extremely remote. These valves are powered from different emergency power trains. The failure of either power train or of either valve operator could prevent the initiation of residual heat removal cooling in the normal manner from the control room. In the event of such a failure, operator action could be taken to open the affected valve manually. The mechanical failure of the disk separating from the stem has been investigated (Reference 3) and its probability has been found to be in the range of 10^{-3} to 10^{-4} per year. The probability of an earthquake larger than the operating-basis earthquake at North Anna is 10^{-2} to 10^{-3} per year. The combined probability of valve stem failure coincident with the earthquake is 10^{-5} to 10^{-7} per year, so low that it need not be considered in the single-failure analysis. In the event of such a failure, the plant would remain in a safe hot standby condition with heat removal via the steam generators.

5.5.4.4 **Tests and Inspections**

The operability of residual heat removal system active components is verified by system operation during cold shutdown and refueling shutdown conditions. The residual heat removal system is tested periodically as required by the Technical Specifications and the Technical Requirements Manual.

The instrumentation channels for the residual heat removal pump flow instrumentation devices are calibrated during each refueling operation if a check indicates that recalibration is necessary.

5.5.5 Pressurizer

5.5.5.1 **Design Bases**

The general configuration of the pressurizer is shown in Figure 5.5-5. The design data of the pressurizer are given in Table 5.5-11. Codes and material requirements are provided in Section 5.2.

5.5.5.1.1 Pressurizer Surge Line

The surge line is sized to limit the pressure drop between the reactor coolant system and the safety valves with maximum allowable discharge flow from the safety valves. (Overpressure of the reactor coolant system does not exceed 100% of the design pressure.)

The surge line is designed to withstand the thermal stresses, resulting from volume surge, that occur during operation. Administrative control of the system differential temperature is provided in plant operating curves, based on engineering analysis, for heatup and cooldown.

5.5.5.1.2 Pressurizer

The volume of the pressurizer is equal to, or greater than, the minimum volume of steam, water, or total of the two that satisfies all of the following requirements:

1. The combined saturated water volume and steam expansion volume are sufficient to provide the desired pressure response to system volume changes.
2. The water volume is sufficient to prevent the heaters from being uncovered during a step-load increase of 10% at full power.
3. The steam volume is large enough to accommodate the surge resulting from the design step-load reduction of load with reactor control and steam dump without the water level reaching the high-level reactor trip point.
4. The steam volume is large enough to prevent water relief through the safety valves following a loss of load with the high water level initiating a reactor trip.
5. The pressurizer does not empty following reactor and turbine trip.
6. The emergency core cooling signal is not activated during reactor trip and turbine trip.

5.5.5.2 **Design Description**

5.5.5.2.1 Pressurizer Surge Line

The pressurizer surge line connects the pressurizer to one reactor hot leg. The line enables continuous coolant volume pressure adjustments between the reactor coolant system and the pressurizer.

5.5.5.2.2 Pressurizer

The pressurizer is a vertical, cylindrical vessel with hemispherical top and bottom heads constructed of carbon steel, with austenitic stainless steel cladding on all surfaces exposed to the reactor coolant.

The surge line nozzle and electric heaters are installed in the bottom head. The heaters are removable for maintenance or replacement. A thermal sleeve is provided to minimize stresses in

the surge line nozzle. A screen at the surge line nozzle and baffles in the lower section of the pressurizer assist mixing and prevent an insurge of cold water from flowing directly to the steam/water interface.

Spray line nozzles and relief and safety valve connections are located in the top head of the vessel. Spray flow is modulated by automatically controlled air-operated valves. The spray valves also can be operated manually by a switch in the control room.

A small continuous spray flow is provided through a manual bypass valve around the power-operated spray valves to ensure that the pressurizer liquid is homogeneous with the coolant and to prevent excessive cooling of the spray piping.

During an outsurge from the pressurizer, flashing of water to steam and generating of steam by automatic actuation of the heaters keep the pressure above the minimum allowable limit. During an insurge from the reactor coolant system, the spray system, which is fed from two cold legs, condenses steam in the vessel to prevent the pressurizer pressure from reaching the setpoint of the power-operated relief valves for normal design transients. Heaters are energized on high water level during insurge to heat the subcooled surge water that enters the pressurizer from the reactor coolant loop.

5.5.5.2.2.1 Pressurizer Support. The skirt-type support is attached to the lower head and extends for a full 360 degrees around the vessel. The lower part of the skirt terminates in a bolting flange with bolt holes for securing the vessel to its foundation. The skirt-type support is provided with ventilation holes around its upper perimeter to ensure free convection of ambient air past the heater plug connector ends for cooling.

5.5.5.2.2.2 Pressurizer Instrumentation. Refer to Chapter 7 for details of the instrumentation associated with pressurizer pressure, level, and temperature.

5.5.5.2.2.3 Spray Line Temperatures. Temperatures in the spray lines from two loops are measured and indicated. Alarms from these signals are actuated by low spray water temperature. Alarm conditions indicate insufficient flow in the spray lines.

5.5.5.2.2.4 Safety and Relief Valve Discharge Temperatures. Temperatures in the pressurizer safety and relief valve discharge lines are measured and indicated. An increase in a discharge line temperature is an indication of leakage through the associated valve.

5.5.5.3 **Design Evaluation**

5.5.5.3.1 System Pressure

Whenever a steam bubble is present within the pressurizer, reactor coolant system pressure is maintained by the pressurizer. Analyses indicate that proper control of pressure is maintained for the operating conditions.

A safety limit has been set to ensure that the reactor coolant system pressure does not exceed the maximum transient value allowed under the ASME Code, Section III, 1968, and thereby ensures continued integrity of the reactor coolant system boundary.

The evaluation of plant conditions of operation that follow indicate that this safety limit is not reached.

During start-up and shutdown, the rate of temperature change is controlled by the operator. When the reactor core is shut down, the maximum heatup rate is limited by pump energy and the installed pressurizer electrical heating capacity.

When the pressurizer is filled with water (i.e., near the end of the second phase of plant cooldown and during initial system heatup), reactor coolant system pressure is maintained by the chemical and volume control system.

5.5.5.3.2 Pressurizer Performance

The pressurizer level is controlled to maintain a minimum free internal volume. The normal operating water volume at full-load conditions is 63% of the free internal vessel volume. Under part-load conditions, the water volume in the vessel is reduced for proportional reductions in plant load to 25% and 31% of free vessel volume at zero-power level depending on the programmed T_{avg}. The various plant operating transients are analyzed and the design pressure is not exceeded with the pressurizer design parameters as given in Table 5.5-11.

The reactor coolant system is normally depressurized by means of normal pressurizer spray, driven from the discharge of either reactor coolant pump A or C. However, if normal spray is not available, the system will be depressurized using the pressurizer auxiliary spray, fed through a single valve, HCV-1311 (Unit 1) or HCV-2311 (Unit 2), from the discharge of the centrifugal charging pump(s). Should this 3-inch valve fail to open following a seismic event, every effort would be made to open it via portable compressed gas cylinder or by maintenance, and if these attempts fail, system pressure could be reduced by blowing the pressurizer down through one of the two parallel power-operated relief valves provided for this purpose (PCV-1455C and PCV-1456 for Unit 1, or PCV-2455C and PCV-2456 for Unit 2). The power-operated relief valves are Seismic Class I and meet the applicable IEEE-279 standards.

5.5.5.3.3 Pressure Setpoints

The reactor coolant system design and operating pressure together with the safety, power relief, and pressurizer spray valves setpoints, and the protection system setpoint pressures are listed in Table 5.5-12. The design pressure allows for operating transient pressure changes. The selected design margin considers core thermal lag, coolant transport times and pressure drops, instrumentation and control response characteristics, and system relief valve characteristics.

5.5.5.3.4 Pressurizer Spray

Two separate, automatically controlled spray valves with remote manual overrides are used to initiate pressurizer spray. In parallel with each spray valve is a manual throttle valve that permits a small continuous flow through both spray lines to reduce thermal stresses and thermal shock when the spray valves open and to help maintain uniform water chemistry and temperature in the pressurizer. Temperature sensors with low alarms are provided in each spray line to alert the operator to insufficient bypass flow. The layout of the common spray line piping to the pressurizer forms a water seal that prevents steam buildup back to the control valves. The spray rate is selected to prevent the pressurizer pressure from reaching the operating setpoint of the power relief valves during a step reduction in power level of 10% of full load.

The pressurizer spray lines and valves are large enough to provide adequate spray using as the driving force the differential pressure between the surge line connection in the hot leg and the spray line connection in the cold leg. The spray line inlet connections extend into the cold-leg piping in the form of a scoop so that the velocity head of the reactor coolant loop flow adds to the spray driving force. The spray valves and spray line connections are arranged so that the spray will operate when one reactor coolant pump is not operating. The line may also be used to assist in equalizing the boron concentration between the reactor coolant loops and the pressurizer.

A flow path from the chemical and volume control system to the pressurizer spray line is also provided. This additional facility provides auxiliary spray to the vapor source of the pressurizer during cooldown if the reactor coolant pumps are not operating. The thermal sleeves on the pressurizer spray connection and the spray piping are designed to withstand the thermal stresses resulting from the introduction of cold spray water.

5.5.5.3.5 Pressurizer Design Analysis

The occurrences for pressurizer design cycle analysis are defined as follows:

1. The temperature in the pressurizer vessel is always, for design purposes, assumed to equal saturation temperature for the existing reactor coolant system pressure, except in the pressurizer steam space subsequent to a pressure increase. In this case, the temperature of the steam space will exceed the saturation temperature because an isentropic compression of the steam is assumed.

   The only exception of the above occurs when the pressurizer is filled solid during plant start-up and cooldown.

2. The temperature shock on the spray nozzle is assumed to equal the temperature of the nozzle minus the cold-leg temperature, and the temperature shock on the surge nozzle is assumed to equal the pressurizer water space temperature minus the hot-leg temperature.

3. Pressurizer spray is assumed to be initiated instantaneously to its design value as soon as the reactor coolant system pressure increases about 40 psi above the nominal operating pressure.

Spray is assumed to be terminated as soon as the reactor coolant system pressure falls 40 psi below the normal operating pressure.

4. Unless otherwise noted, pressurizer spray is assumed to be initiated once per occurrence of each transient condition. The pressurizer surge nozzle is also assumed to be subject to one temperature transient per transient condition, unless otherwise noted.
5. At the end of each transient, except the faulted conditions, the reactor coolant system is assumed to return to a load condition consistent with the plant heatup transient.
6. Temperature changes occurring as a result of pressurizer spray are assumed to be instantaneous. Temperature changes occurring on the surge nozzle are also assumed to be instantaneous.
7. Whenever spray is initiated in the pressurizer, the pressurizer water level is assumed to be at the no-load level.

5.5.5.4 **Tests and Inspections**

The pressurizer is designed and constructed in accordance with the ASME Code, Section III, 1968.

To implement the requirements of the ASME Code, Section XI, the following welds are designed and constructed to present a smooth transition surface between the parent metal and the weld metal. The path is ground smooth for ultrasonic inspection.

1. Support skirt to the pressurizer lower head.
2. Surge nozzle to the lower head.
3. Nozzles to the safety, relief, and spray lines.
4. Nozzle-to-safe-end attachment welds.
5. All girth and longitudinal full-penetration welds.
6. Manway attachment welds.

The liner within the safe-end nozzle region extends beyond the weld region to maintain a uniform geometry for ultrasonic inspection.

Peripheral support rings are furnished for the removable insulation modules.

The pressurizer quality assurance program is given in Table 5.5-13.

5.5.6 Pressurizer Relief Tank

5.5.6.1 Design Bases

Design data for the pressurizer surge tank are given in Table 5.5-14; codes and materials of the tank are given in Section 5.2.

The tank design is based on the requirement to accept a steam discharge from the pressurizer equal to 110% of the pressurizer steam volume at full load. The tank is not designed to accept a continuous discharge from the pressurizer. The volume of water in the tank is capable of absorbing the heat from the assumed discharge, assuming an initial temperature of 120°F and increasing to a final temperature of 200°F. If the temperature in the tank rises above 120°F during plant operation, the tank is cooled by spraying in cool water and draining out the warm mixture to the boron recovery system via the primary drain transfer tank.

5.5.6.2 Design Description

The pressurizer relief tank condenses and cools the discharge from the pressurizer safety and relief valves. Discharge from smaller relief valves located inside the containment is also piped to the relief tank. The tank normally contains water and a predominantly nitrogen atmosphere; however, provision is made to permit the gas in the tank to be periodically analyzed to monitor the concentration of hydrogen and/or oxygen.

Steam is discharged through a sparger pipe under the water level. This condenses and cools the steam by mixing it with water that is near ambient temperature. The tank is equipped with an internal spray (to spray in cool primary-grade water) and a drain to the primary drain transfer tank, which are used to cool the tank following a discharge. A flanged nozzle provides a pressurizer discharge line connection.

5.5.6.2.1 Pressurizer Relief Tank Pressure

The pressurizer relief tank pressure transmitter provides a signal for an indicator and provides a high-pressure alarm. A rupture disk protects the tank from excess pressure.

An analysis was performed to determine the mass that would be dumped to the pressurizer relief tank during a spurious PORV opening. The following assumptions were made, using Unit 2 setpoints:

1. The power-operated relief valves inadvertently open at 440 psig saturated in the pressurizer.
2. The power-operated relief valves close when the allowable setpoint of 370 psig is achieved.
3. Pressurizer is at 21% programmed level.

Total steam relief under these conditions was calculated to be less than 20% of the design capacity of the pressurizer relief tank. Thus, the rupture disk will remain intact.

5.5.6.2.2 Pressurizer Relief Tank Level

The pressurizer relief tank level transmitter supplies a signal for an indicator and provides high- and low-level alarms.

5.5.6.2.3 Pressurizer Relief Tank Water Temperature

The temperature of the water in the pressurizer relief tank is indicated, and an alarm actuated by high temperature informs the operator that cooling of the tank contents is required.

5.5.6.3 **Design Evaluation**

The volume of water in the tank is capable of absorbing heat from the pressurizer discharge discussed in Section 5.5.6.1. Water temperature in the tank is maintained at the nominal containment temperature.

The rupture disks on the relief tank have a relief capacity equal to the combined capacity of the pressurizer safety valves. The tank design pressure is twice the calculated pressure resulting from the maximum design safety valve discharge described above. The tank and rupture disks holders are also designed for full vacuum to prevent tank collapse if the contents cool following a discharge without nitrogen being added.

The discharge piping from the safety and relief valves to the relief tank is large enough to prevent backpressure at the safety valves from exceeding 20% of the setpoint pressure at full flow.

5.5.7 Valves Other Than Safety and Relief Valves

5.5.7.1 **Design Bases**

As noted in Section 5.2, for all valves out to and including the second valve normally closed or capable of automatic or remote closure, valve closure time is such that for any postulated component failure outside the system boundary, the loss of reactor coolant would not prevent orderly reactor shutdown and cooldown assuming makeup is provided by normal makeup systems. Normal makeup systems are those systems normally used to maintain reactor coolant inventory under respective conditions of start-up, hot standby, operation, or cooldown. If the second of two normally open check valves is considered the boundary, means are provided to periodically assess backflow leakage of the first valve when closed. For a check valve to qualify as the system boundary, it must be located inside the containment system.

Materials of construction are specified to minimize corrosion/erosion and to ensure compatability with the environment.

Leakage is minimized to the extent practicable by design.

Valves are designed and fabricated in accordance with USAS B16.5, MSS-SP-66, and ASME Code, Section III.

5.5.7.2 **Design Description**

All valves in the reactor coolant system that are in contact with the coolant are constructed primarily of stainless steel. Other materials in contact with the coolant, such as for hard surfacing and packing, are special materials.

All manual and motor-operated valves of the reactor coolant system that are 3 inches and larger are provided with double-packed stuffing boxes and stem intermediate lantern gland leakoff connections. All throttling control valves, regardless of size, are provided with double-packed stuffing boxes and with stem leakoff connections. All leakoff connections are piped to a closed collection system if the valve normally contains radioactive fluid and operates above 212°F. Leakage to the atmosphere is essentially zero for these valves.

Gate valves at the engineered safety features interface are either wedge design or parallel disk and are essentially straight through. The wedge may be either split or solid. All gate valves have backseat and outside screw and yoke. Globe valves “T” and “Y” style are full ported with outside screw and yoke construction. Check valves are spring-loaded lift piston types for sizes 2-1/2 inches and smaller, and swing type for sizes larger than 2-1/2 inches. All check valves that contain radioactive fluid are stainless steel and do not have body penetrations other than the inlet, outlet, and bonnet. The check hinge is serviced through the bonnet.

The accumulator check valve is designed with a low-pressure drop configuration with all operating parts contained within the body. The disk has an imparted limited rotation to provide a change of seating surface and alignment after each valve opening.

The residual heat removal system inlet MOVs are provided with interlocks that meet the intent of IEEE-279. These interlocks are discussed in detail in Sections 5.5.4 and 7.6.2.

The isolation valves between the accumulators and the reactor coolant system boundary are provided with interlocks that meet the intent of IEEE-279 and ensure automatic valve opening when reactor coolant system pressure exceeds a specified pressure or on safety injection signal. These interlocks are discussed in Sections 6.3.2.2.7 and 7.6.6.

The reactor coolant loop stop valves are remotely controlled motor-operated gate valves that permit any loop to be isolated from the reactor vessel. One valve is installed on each hot leg and one on each cold leg. A reactor coolant loop stop valve is shown in Figure 5.5-6. The design of the valve is basically the same as noted above with the additional feature that each set of packing can be tightened independently of the other sets of packing.

To ensure against an accidental start-up of an unborated and/or cold isolated loop, an additional valve interlock system is provided that meets the intent of IEEE-279. There is a relief line and bypass around the cold-leg isolation valve. The additional interlocks ensure that flow from the isolated loop to the remainder of the reactor coolant system takes place through the relief

line valve (after system pressure is equalized through the loop drain header, and the hot-leg isolation valve is opened) for at least 90 minutes before the cold-leg stop valve is opened.

The flow through the relief line is low (approximately 200 gpm) so that the temperature and boron concentration are brought to equilibrium with the remainder of the system at a relatively slow rate. The specific loop stop valve interlocks are described in Section 15.2.6.

The parameters of each reactor coolant loop stop valve are shown in Table 5.5-15. Codes and material requirements are provided in Section 5.2.

5.5.7.3 Design Evaluation

Stress analysis of the reactor coolant loop/support system, discussed in Sections 3.7 and 5.2, ensure acceptable stresses for all valves in the reactor coolant pressure boundary under every expected condition.

Reactor coolant chemistry is specified to minimize corrosion. Periodic analyses of coolant chemical composition, discussed in the Technical Requirements Manual, ensure that the reactor coolant meets those specifications.

Valve leakage is minimized by design features as discussed above.

All reactor coolant system boundary valves required to perform a safety function during the short-term recovery from transients or events considered in the respective operating condition categories will operate in less than 10 seconds.

5.5.7.4 Tests and Inspections

Hydrostatic, seat leakage, and operation tests are performed on reactor coolant boundary valves as required by MSS-SP-61 and the Technical Specifications. No further test program is considered necessary.

The valve quality assurance program is indicated in Table 5.5-16.

There are no full-penetration welds within valve body walls. Valves are accessible for disassembly and internal visual inspection.

Qualification of the block valves according to requirements of NUREG-0737, Item II.D.1, is discussed in Section 5.5.8.4.

5.5.8 Safety and Relief Valves

5.5.8.1 Design Bases

The combined capacity of the pressurizer safety valves is designed to accommodate the maximum surge resulting from complete loss of load. This objective is met without reactor trip or

any operation action provided that the steam safety valves open as designed when steam pressure reaches the steam-side safety setting.

The pressurizer power-operated relief valves are designed to limit pressurizer pressure to a value below the fixed high-pressure reactor trip setpoint.

5.5.8.2 **Design Description**

The pressurizer safety valves are totally enclosed pop type. The valves are spring loaded, self activated, and with backpressure compensation features.

The 6-inch pipes connecting the pressurizer nozzles to their respective code safety valves are shaped in the form of a loop seal. Condensate, a result of normal heat losses to the ambient, accumulates in the loop. The water prevents any leakage of hydrogen gas or steam through the safety valve seats. If the pressurizer pressure exceeds the set pressure of the safety valves, they start lifting, and the water from the loop seal discharges during the accumulation period.

The power relief valves are quick opening, operated automatically or by remote control. Remotely operated stop valves are provided to isolate the power-operated relief valves if excessive leakage develops.

Two pressurizer power-operated relief valves are provided to relieve pressure from the pressurizer to the pressurizer relief tank. The valves are located downstream of isolation valves.

The power-operated relief valves protect the reactor coolant system from overpressure for a large power mismatch during the normal plant operation, and, during solid water modes at start-up, prevent actuation of the fixed high-pressure reactor trip. The operation of the power-operated relief valves also limits the undesirable opening of the spring-loaded pressurizer safety valves.

The power-operated relief valves have dual setpoints and, during normal plant operation, are controlled by containment instrument air. During solid water modes of operation, a three-way solenoid is energized and the pneumatic supply is switched to the N_2 reserve tanks.

The N_2 reserve tanks are subject to periodic pressure surveillance. During operating modes (MODES 1-3), sufficient pressure is maintained in the tanks to ensure that each PORV is capable of providing adequate RCS depressurization following a design basis steam generator tube rupture.

During the shutdown modes (MODES 4-6) when low-temperature overpressure protection is required, sufficient pressure is maintained in the tanks to ensure that each PORV is capable of stroking at least 120 times. This provides adequate capability to cope with an inadvertent start of a high-head safety injection pump with a water solid RCS, assuming a 10-minute response time for operator intervention to terminate the event.

Alarms are provided to protect the reactor coolant system against high pressure during start-up or shutdown and loss of reactor coolant system pressure protection which the alarms annunciate in the main control room.

The relief valve solenoids are powered from the following circuits:

Valve	Solenoid	125V dc Panel/Circuit
1-RC-PCV-1455C	SOV-1, 2	PNL 1A, Ckt. 23
	SOV-3	PNL 1-II-A, Ckt. 1
1-RC-PCV-1456	SOV-1, 2	PNL 1B, Ckt. 23
	SOV-3	PNL 1-IV-A, Ckt. 1
2-RC-PCV-2455C	SOV-1, 2	PNL 2A, Ckt. 23
	SOV-3	PNL 2-II-A, Ckt. 1
2-RC-PCV-2456	SOV-1, 2	PNL 2B, Ckt. 23
	SOV-3	PNL 2-IV-A, Ckt. 1

During normal operation the PORV, PCV-1456 (Unit 1) and PCV-2456 (Unit 2), is closed. Solenoid valves SOV-1456(2456)-1 and -2 admit air and SOV-1456(2456)-3 admits nitrogen to open PCV-1456(2456). The SOVs are interlocked so that air and nitrogen are not used at the same time. The operation of PCV-1455C(2455C) is similar.

The system is controlled by a keyswitch in the control room. Turning the keyswitch to the AUTO position provides low temperature overpressure protection in accordance with the Technical Specifications.

When the power-operated relief valves are being used for protection, an alarm alerting the operator of an overpressure event is provided.

Design parameters for the pressurizer spray control, safety, and power relief valves are given in Table 5.5-17.

5.5.8.3 **Design Evaluation**

The pressurizer safety valves prevent reactor coolant system pressure from exceeding 110% of system design pressure, in compliance with ASME Code, Section III.

A pressurizer safety valve sizing calculation was performed for North Anna Units 1 and 2 in accordance with the methodology detailed in Reference 6. In addition, an evaluation of the impact of increased pressurizer safety valve (PSV) tolerance was performed as described in Reference 11. As described there, PSV adequacy was demonstrated for accidents involving significant RCS pressurization. Of these accidents, the complete loss of external load was the most limiting. In the loss of load analysis, no credit was taken for the following:

1. Reactor trip from turbine trip.

2. Pressurizer relief valve operation.
3. Steam-line relief valve operation.
4. Steam dump system operation.
5. Reactor control system operation.
6. Pressurizer level control system operation.
7. Pressurizer spray valve operation.

In addition, the plant is assumed to be initially operating at 102% of full power and at the maximum reactor coolant system average temperature and pressure consistent with full-power operation.

The results of the calculation show a peak pressure less than the design criterion of 2750 psia.

For the overpressure analysis, an average setpoint tolerance for the reactor coolant system safety valves of +2% and maximum tolerance for any valve of +3% was used. No credit is taken for automatic actuation of the reactor coolant system power-operated relief valves in any accident analyses; as a result, a setpoint tolerance is not specified. In addition, the power-operated relief valves are used manually by the operator at various pressures.

The pressurizer power relief valves prevent actuation of the fixed reactor high-pressure trip for all design transients up to and including the design step-load decrease (50% of full load) with steam dump. The relief valves also limit undesirable opening of the spring-loaded safety valves.

Flow-induced transient dynamic loads caused by rapid opening of the pressurizer safety and relief valves are considered in the design of the pressurizer relief piping system. These forcing functions are based on Westinghouse System Standard No. 1.3, *Systems Standard Design Criteria Nuclear Steam Supply System Design Transients* (October 1972), which includes the effect of water slugs arising from the loop seals. The limiting number of actuations for the power operated relief valves is 70 based on the fatigue evaluation. This limitation supersedes 320 PORV actuations described in Westinghouse System Standard 1.3.

A time-history dynamic analysis was performed by using the above calculated forcing functions to compute the responses (deflections, reactions, and stresses) of this piping system. These loadings are classified as occasional mechanical loads in Subarticle NB-3600 of the ASME Code, Section III, which are included in the piping analysis under applicable design conditions.

The pressurizer safety valve restraint was designed to withstand seismic, thermal, and deadweight forces, in addition to fluid transient loads that occur during operation of the pressurizer safety valve. The restraint is designed for all possible force and moment combinations

tending to produce axial, plane bending, torsional, and shear stresses. The restraint itself consists of the following:

1. Two circumferential anchor straps around the pressurizer vessel.
2. Two built-up box sections that are welded to each other and are bolted to the anchor strap.
3. A flange welded to the box section and bolted to the safety valve flange.

Each of the pressurizer power relief valves located farthest outboard of the pressurizer vessel is restrained in the vertical direction using a welded framework. This restraint and the relief valve discharge piping system is designed to accommodate all sustained/transient primary and secondary loading conditions, including thermal expansion, deadweight, seismic, and relief valve discharging loads.

5.5.8.4 Tests and Inspections

The testing performed on safety and relief valves, other than operational tests and inspections, is the required hydrostatic, seat leakage, and operation tests. Also, the safety backup nitrogen supply for the power-operated relief valves is tested to ensure that the power-operated relief valves can function on the loss of normal air and nitrogen supplies. These tests ensure that the valves will operate as designed.

There are no full-penetration welds within the valve body walls. Valves are accessible for disassembly and internal visual inspection.

In accordance with the requirements of NUREG 0737, Item II.D.1, concerning performance testing and evaluation of relief, safety and block valves and associated discharge piping analysis, Vepco has responded to the performance testing and plant-specific evaluations in References 4 and 5. Piping analysis has been completed and necessary modifications have been implemented.

5.5.9 Reactor Coolant System Equipment Supports

5.5.9.1 Design Basis

The reactor coolant system includes the reactor vessel, three steam generators, three reactor coolant pumps, and a pressurizer. Structures are provided to support this equipment to ensure system integrity during normal operation, design-basis accident conditions, and seismic events.

All supports in the reactor coolant system are designed to withstand the effects of horizontal and vertical design-basis earthquake acting simultaneously with an instantaneously applied pipe rupture in addition to normal operating loads. Loads due to pressure, deadweight and thermal are combined algebraically and then added directly to the Square Root of the Sum of Squares (SRSS) of SSE and the worst effect postulated main steam line break, main feedwater line break, or reactor coolant loop branch line (RHR, Pressurizer Surge, accumulator) break to determine combined loads. The values of dynamic hydraulic loads for any reactor coolant branch line

rupture are based on the Westinghouse blowdown analysis. A single-loop analysis has been performed to ensure that no stresses in the supports exceeded 90% of the yield point of the structural material used. A Significant margin of safety is established on each supporting component.

The combination of design-basis earthquake, pipe rupture, and deadweight loads is comparable to the combination of loads considered to be a faulted condition under the present ASME Code, Section III. No such definition of load categories existed at the time the supports were designed and no applicable ASME Code for component supports was in effect as of January 1973. This extreme combination of loads based on a detailed dynamic analysis was used as the basis for the stress analysis. The normal operating loads were calculated and, since the magnitude of these loads was small when compared with the accident loads, a stress analysis for the normal operating condition was not performed.

All welding is in accordance with Section IX of the ASME Code, AWS as appropriate, and all welds are examined by radiographic, ultrasonic, dye penetrant, or magnetic particle techniques.

The primary equipment supports for the faulted condition are designed to a maximum stress limit of 90% of the yield point of the structural material used. Comparing this stress allowable criterion with that of Subsection NF of ASME Code, Section III, shows that the basic support materials used (A-36 and A-537-type material) provide a more conservative design and that stresses in the high-strength bolting and clevis materials (A-574 and A-340-type material) are less conservative than the material yield criteria of ASME Code, Section III.

Normal and upset condition loads can be determined by the deletion of the pipe rupture loads from the design loads used. Operating-basis earthquake and design-basis earthquake have been concluded to yield generally similar loads that are a small percentage of the total design load. On the basis of this load comparison, the satisfaction of Subsection NF for normal and upset operating loads has been concluded. Compliance with the various design rules specified in Subsection NF is satisfactory. There are some materials and dimensional details used that are not currently listed; however, they are conservative.

5.5.9.2 **Description**

5.5.9.2.1 Reactor Vessel Support

The reactor vessel is supported by six sliding foot assemblies mounted on the neutron shield tank as shown in Figure 5.5-7. These foot assemblies were fabricated from modified AISI 4330 steel forgings. The support feet are designed to restrain seismic movement of the reactor vessel, while allowing radial thermal expansion. The neutron shield tank is a double-walled cylindrical structure of ASTM A516, Grade 60 steel that transfers the loadings to the heavily reinforced concrete mat and internal structures of the containment building. The tank also serves to minimize

gamma and neutron heating of the primary concrete shield, and to attenuate neutron radiation outside of the primary shield to acceptable limits.

The shield tank is securely fastened by anchor bolts. Overturning moments and horizontal forces induced on the tank during normal operation or accident condition are taken by the shield tank anchor bolts and the reinforced-concrete primary shield wall poured around the neutron shield tank. Any resulting vertical force and torque is taken by the anchor bolts.

The tank was completely shop fabricated and was constructed in accordance with applicable portions of Section VIII, Division 2 (1968) of the ASME Code. However, a code stamp is not required because it is not within the code jurisdiction. All welding procedures and welding operator qualifications were in accordance with Section IX of the ASME Code.

After fabrication, the completed tank was subjected in the vertical position to a hydrostatic test of 25 psig as measured on top of the tank. In no case did the hydrostatic pressure exceed 35 psig anywhere in the tank. The tank was also leak tested with dry air at 20 psig by applying soapsuds to all welds accessible from the outside of the tank.

5.5.9.2.2 Steam Generator and Reactor Coolant Pump Supports

The steam generator and reactor coolant pump supports are shown in Figures 5.5-8 and 5.5-9, and the load paths into the reinforced concrete are shown in Figure 5.5-10. The materials used were for the most part commercially available structural shapes of A36 steel. High-strength quenched and tempered alloy steels were used for local attachments at the steam generator support pads, in the hydraulic snubbing assemblies, and in the pump support columns.

The steam generator support system consists of an upper support ring and a lower support frame. The upper support ring was shimmed in the cold condition to the steam generator with a sufficient radial gap to permit full-pressure expansion of the steam generator and insulated so that it expands thermally as the steam generator is brought up to temperature. The upper support ring transmits horizontal forces from the steam generator through four tangential load trains to the reinforced-concrete charging floor. The charging floor in turn transmits these horizontal forces to the reactor shield wall, the crane wall, and the cubicle walls, where, through shearing actions, it is further transmitted downward to the mat. A 4-ft. 8-in. octagonal concrete column between the cubicle floor and the mat beneath the steam generator provides an additional load path that transmits some of the vertical forces directly from the cubicle floor to the mat. The two tangential load trains from the upper support ring to the charging floor parallel to the hot leg of the reactor coolant loop are equipped with hydraulic snubbing cylinders that permit limited slow motion of the steam generator to allow for thermal expansion of the reactor coolant piping from the reactor to the steam generator. However, the cylinders react to resist suddenly applied forces that occur from earthquake and/or pipe rupture conditions. The other two tangential loads trains from the upper support ring to the charging floor act in a direction perpendicular to the direction of the reactor coolant loop hot leg. Since the movement in that direction is not significant, two strut

members are designed to resist applied forces primarily from earthquake and/or postulated pipe rupture conditions.

The lower support frame is a weldment fabricated of A36 and A572 structural steel shapes. The support frame slides on lubricated bearing plates located under each corner column to permit thermal expansion of the reactor coolant piping from the reactor to the steam generator. The four columns also transmit vertical forces from the steam generator to the cubicle floor. The support frame has large shear blocks on two slides that fit into embedments in the cubicle floor. These shear blocks guide the lower support frame along a direction radial from the reactor and transmit forces perpendicular to this motion into the embedments in the cubicle floor. The attachment of the lower support frame to the four pads on the steam generator bottom head permits radial thermal expansion of the steam generator.

The inservice inspection of external supports for reactor coolant system vessels is in accordance with ASME Section XI. Additionally, to periodically verify the integrity of the lower steam generator supports, all accessible main member-to-member welds joining A572 material will be visually examined during each inservice inspection interval, as controlled by the Augmented Inspection Manual. Main member welds are those joining the wide flange members to each other, and do not include welds on gussets, cover plates, etc. The same time schedule as required for vessel nozzles will be used.

The reactor coolant pump is mounted in a support frame that permits radial thermal expansion of the pump feet. The frame is held above the cubicle floor by three pin-ended columns that provide vertical support while allowing free movement in the horizontal plane. Lateral support for the pump is provided by two hydraulic snubbing assemblies between the pump support frame and the steam generator lower support frame. These snubbing assemblies permit slow horizontal movement of the pumps for thermal expansion of reactor coolant piping between the pump and the steam generator but react to suddenly applied forces from an earthquake and pipe rupture.

The vertical forces applied to the cubicle floor are carried by the reinforced concrete to the edges of the floor where the vertical forces are transmitted to the surrounding walls. The vertical forces transmitted to the cubicle walls are in turn transmitted out to the crane wall columns and to the shield walls where they are carried downward to the mat.

Horizontal forces applied to the cubicle floor act as torsional moments about the centerline of the reactor. This moment is transmitted to the mat by torsional shearing forces in the shield wall and by shear forces in the crane wall columns and in the column below the steam generator.

5.5.9.2.3 Pressurizer Support

The pressurizer vessel is mounted to a rigid ring girder that is suspended from the charging floor by four hanger columns as shown in Figure 5.5-11. Two brackets welded to the ring girder

slide in guides rigidly attached to the wall, which restrain all motions except vertical translation. In addition, antisway brackets welded to the shell of the pressurizer fit into striker plate assemblies embedded in the concrete floor close to the center of gravity of the vessel. These brackets permit the pressure vessel to expand vertically but restrain horizontal displacements.

The ring girder is fabricated from ASTM A516, Grade 70 steel and the striker plate assemblies are fabricated from ASTM A543, Grade B, Class II steel. The hanger columns are fabricated from ASTM A106, Grade B pipe. The majority of the fasteners and shear pins used in the support are fabricated from either ASTM A193, Grade B7, or ASTM A540, Grade B23, depending on the stress level.

5.5.9.3 **Evaluation**

5.5.9.3.1 Steam Generator and Reactor Coolant Pump Supports

Dynamic analyses were performed to determine loads on the support structures and components resulting from rupture of the branch lines to the reactor coolant piping (RHR, Pressurizer Surge, Accumulator lines), main steam lines and main feedwater lines and design-basis horizontal and vertical earthquakes. The combined loadings were obtained by first algebraically summing the loads due to pressure, deadweight, and thermal and then by directly adding that to SRSS of SSE and the worst effect of postulated main steam line break, main feedwater line break or reactor coolant loop branch line (RHR, Pressurizer Surge, Accumulator) break.

The dynamic model for a loop as indicated in Figure 5.5-12 includes the steam generator, reactor coolant pump, associated piping, and supports as a coupled system. To complete the model, the inlet and outlet nozzles of the reactor vessel were assumed to be rigidly attached to the vessel. The mass and stiffness characteristics of each of the major subsystems were accurately transformed to a lumped parameter system. Approximately 80 nodes (450 static degrees of freedom) were employed in the dynamic model representation.

Natural frequencies, characteristic mode shapes, and modal participation factors were calculated for the undamped multidegree of freedom combined structural system using the “NUPIPE-SW” computer program. The dynamic loading conditions were specified as spatial load vectors and associated time histories. The “step-by-step direct integration method” was employed to obtain a time history of forces and displacements for the pipe rupture solution. The “Normal Mode Method”, combined with the square root of the sum of the squares approach, was used to determine the seismic response of the system.

The forcing functions used in the dynamic pipe rupture analysis were supplied by Westinghouse. The data consisted of time-history hydraulic forcing functions given at several points in the reactor coolant loop where changes in flow direction for flow area occur. Amplified response spectra were employed to determine the seismic responses.

Since the dynamic model indicated in Figure 5.5-12 is an idealization of the support structure and equipment shown in Figure 5.5-8, the results of the dynamic analysis could not be used directly. Instead, the time history of displacements obtained from the dynamic analysis were applied to a more detailed static analysis model to obtain internal loads and stresses in the support structure, loads on the equipment support pads, and loads on the reinforced-concrete structure that interface with the equipment supports. This stress model is shown in Figure 5.5-13.

Since Westinghouse is responsible for the design of the reactor coolant loop system, a final verification dynamic analysis was performed by Westinghouse subsequent to the completion of the steam generator and reactor coolant pump support design.

These analyses were completed and the results indicated that no stresses exceeded 90% of the yield point of the structural material used. Tables 5.5-18, 5.5-19, and 5.5-20 contain dynamic loads for some of the components. Nondynamic effect such as thermal gradients produced in the supports by pipe rupture jet impingement were also investigated. A horizontal longitudinal split in the reactor coolant hot leg, for example, produces an average temperature in the flange of the nearest support member of approximately 250°F. This and other locations of the supports have been examined for the effects of thermal gradients.

5.5.9.3.2 Reactor Vessel Supports, Neutron Shield Tank, and Pressurizer Supports

For the determination of dynamic loads on the reactor vessel supports, the neutron shield tank, and the pressurizer supports, an analysis technique was applied that is similar to that used for the steam generator and reactor coolant pump supports. However, for the reactor vessel supports and neutron shield tank, the STRUDL program (developed by the MIT Civil Engineering Department) was used.

The dynamic models used in the analysis of the pressurizer supports and reactor vessel supports are shown in Figures 5.5-14 and 5.5-15, respectively.

5.5.9.3.3 Snubber Design and Qualification of Hydraulic Cylinders for North Anna Power Station Units 1 and 2.

General Description

The reactor coolant system snubbers are hydraulic units including a hydraulic cylinder with piston, piston rod, flow control devices, cylinder end lug (paddle) with bearings to fit into the wall bracket (clevis), and a self-contained fluid reservoir. The hydraulic cylinder has a threaded rod end to interface with extension pieces to make the unit the appropriate length for the application.

Two sizes of snubbers are used. The snubbers installed between the lower steam generator support and reactor pump support frame are designed with a normal capacity of 448 kips and a

faulted load capacity of 1000 kips, while those installed to restrain the upper steam generator are designed with a normal load capacity of 1124 kips and a faulted load capacity of 1900 kips.

The specified environmental limits of the hydraulic snubbing cylinders for continuous duty are as follows:

Temperature Range: 70 - 120°F

Max Radiation Exposure: 3.0×10^7 Rads

Relative Humidity: 30 - 100%

Ambient Pressure: 8.9 - 11.8 psia

Snubber Description and Operation

The reactor coolant system primary equipment snubbers are hydraulic units using the movement of a piston and internal valves to control the speed with which the snubber extends or contracts. During normal operation, the piston is free to move in both directions after overcoming a static load equal to or less than 15 kips for the 1000-kip units and 19 kips for the 1900-kip units. The total stroke is greater than or equal to 5 inches to provide adequate motion in both the tension and compression direction of the piston rod.

When a dynamic event such as a seismic event or pipe rupture occurs, there is a pressure buildup due to the velocity of the supported component. This exerts enough force on the control valves to overcome the biasing spring force holding the valve open. This causes the valves to close and the snubber to lock up, restraining the equipment to which it is attached.

Bleed rates are achieved when the snubber locks up and a unidirectional force remains.

All materials used in the snubbers are selected with particular attention being given to the application for which they are intended and the environmental conditions which they will see. All components are corrosion resistant. Metallic components are stainless steel and brass alloy. Seals are selected for their long life and resistance to the radiation and temperature conditions to be experienced. Silicone-based hydraulic fluid is used to withstand the radiation, temperature, and pressure conditions for which the snubbers are designed.

Development Tests

The hydraulic snubbers have been subjected to a rigorous series of qualification tests. The results of the test series proved that the 1000-kip snubber can withstand 1.1×10^6 lb and the 1900-kip snubber can withstand 2.09×10^6 lb. Sample units were disassembled after the tests and component parts examined. The results of the examination indicated that the parts were in good working order.

All units were subjected to acceptance tests to verify load capacity, lockup rate, bleed rates and the running drag in both tension and compression direction.

5.5.10 Reactor Coolant Vent System

The reactor coolant high-point vent system conforms to the requirements set forth in Section II.B.1 of NUREG-0737 entitled, *Clarification of TMI Action Plan Requirements.*

The basic function of the reactor coolant vent system is to remove non-condensables or steam from the reactor vessel head and the pressurizer. The system is designed to mitigate inadequate core cooling, inadequate natural circulation flow, and inability to depressurize to the RHRS initiation conditions resulting from the accumulation of noncondensable gases in the reactor coolant system.

5.5.10.1 **Design Bases**

The reactor coolant vent system design bases are as follows:

- Vent the reactor vessel and pressurizer with any limiting single active failure.
- Isolate a system venting operation with any limiting single active failure.
- Allow a reasonable venting time without developing unacceptable levels of bulk combustible gas concentrations in the containment.
- Minimize the reactor coolant pressure boundary leakage through the system.
- Minimize the extension of the reactor coolant pressure boundary in the reactor coolant vent system.

5.5.10.2 **Design Description**

The reactor coolant vent system provides the capability to vent the reactor vessel or the pressurizer using only safety-related equipment. The active portion of the vent system consists of four 1-inch open/close solenoid-operated isolated valves. The isolation valves are powered by vital dc power supplies and are fail-closed active valves in compliance with the NRC Regulatory Guide 1.48.

The reactor vessel vent system connects to a part-length control rod drive housing above the seismic support platform. The vent system piping connects to the control rod housing via a special plug adapter connection, machined to reduce the vent piping to 1-inch, schedule 160 (0.815 inch i.d.). The reactor vessel head vent piping then divides into two flow paths each supported by the seismic support platform. Each flow path contains a 3/8-inch orifice and two remotely-operated isolation valves in series. The two flow paths are reconnected downstream of the second isolation valve in each flow path. The common downstream piping then continues around the seismic

support platform where a short section of piping would direct vented fluid toward the fuel transfer canal/refueling cavity area.

The common vent pipe upstream from the remotely operated valves contains a manual globe valve. This valve is administratively controlled open during normal power operation, but may be closed for refueling or maintenance.

The pressurizer vent system connects to the pressurizer vapor sample line. Like the reactor vessel head vent system, it utilizes a normally open, manual, existing globe valve. Parallel flow paths containing remotely-operated solenoid valves were added. Vent system connection to the existing sample piping is accomplished by the installation of a tee downstream of the manual globe valve. A 3/4-inch by 1-inch reducer connects this piping to the common 1-inch vent piping upstream of the solenoid-operated globe valves. A water seal is provided on the inlet side of the isolation valves to minimize the possibility of seat leakage. As in the reactor vessel vent system, the parallel pressurizer flow paths are reconnected downstream of the second isolation valve in each flow path. This common vent piping runs along the inside crane wall and discharges into the fuel transfer canal.

The isolation valves in series in each parallel flow path are powered by the same vital 125V dc power supply. Similarly, series valves in the alternate parallel path are powered by the vital dc bus energized from the redundant power train. The power supplies for these valves are backed-up by the battery. All valves will fail closed on loss of power. Operation of the reactor coolant vent system will be conducted from the control room of each unit. Valve control switches and positive valve position indicator lights (open-shut) are located on the post-accident monitor and control panel.

The piping and vent material in contact with reactor coolant water is austenitic stainless steel, compatible with the reactor coolant chemistry shown in Table 5.2-25.

The reactor vessel head vent piping and fittings up to and including the 3/8-inch orifices constitute an extension of the reactor coolant pressure boundary, and are designed and fabricated to meet the code requirements of ANSI-B31.7 as Class 1 nuclear piping and fittings (Vepco-Q1). That portion of the reactor vessel head vent from the 3/8-inch orifices up to and including the second isolation valve in each parallel flow path is designed and fabricated to meet the code requirements of ANSI B31.7 as Class 2 nuclear piping (Vepco Q2).

The solenoid-operated isolation valves in both the reactor vessel head and pressurizer vent lines are designed and qualified to meet the following requirements:

1. NRC Regulatory Guide 1.48 - Design Limits and Loading Combinations for Seismic Class I Fluid System Components.
2. Design pressure - 2485 psig.

3. Design temperature - 650°F.
4. ASME Section III, 1977 Safety Class 1
5. IEEE-323-1974 Equipment Qualification
   IEEE-344-1975 Seismic Testing
   IEEE-382-1972 Guide for Type Test of Class 1 Electrical Valve Operators for Nuclear Power Generating Stations.

All solenoid-operated isolation valves are designed to meet environmental qualifications under normal, transient, and accident conditions.

The pressurizer vent piping connects to the existing line 3/4-RC-51-Q1. Failure of this piping does not constitute a loss of coolant accident as venting steam through a 3/4-inch line is equivalent to venting water through a 3/8-inch orifice and the reactor can be shut down and cooled down in an orderly manner assuming water makeup is provided by the normal charging system. A safety class transition from Q1 to Q2 is made at the 3/8-inch orifice in this line. All piping and fittings from the orifice to the second isolation valve in each flow path is designed and fabricated to meet the code requirements of ANSI-B31.7 as Class 2 nuclear piping (Vepco Q2).

Portions of the reactor vessel head and pressurizer vent systems downstream of the second isolation valve up to vent piping termination to the fuel transfer canal/refueling cavity area meet the requirements of ANSI-B31.1 (Vepco Non-Q). The entire reactor coolant vent system is seismically supported.

There are no removable sections in the reactor vessel head vent system, and, except for cable disconnection, the system remains intact during head removal.

The reactor coolant vent system will be manually operated only during accident conditions which require venting of steam or noncondensable gases to ensure adequate core cooling.

Explicit administrative controls and operating procedures dictate when the vent system will be operated as well as conditions under which the system will not be operated. Operating guidelines were submitted to the NRC by Reference 10.

5.5.10.3 **Design Evaluation**

The combination of valve failure modes and power supply assignments allows the reactor head vent system and the pressurizer vent system to meet the single-active-failure criteria for venting initiation and isolation. By procedure, the venting operation will use only one of the four available flowpaths provided by the reactor coolant system (two parallel paths on the vessel head and two parallel paths on the pressurizer) at any one time. Redundant power supplies are provided so that the failure of a power supply powering one vent path will not affect the operation of the valves in the parallel flow path. Likewise, a valve mechanically failing in one flowpath is addressed by opening the parallel path. If a single valve mechanically fails in the open position,

the valve in series may be used to terminate the vent flow. The design provides that, for the very unlikely event of both series valves in a vent path failing open, the in-line orifice will restrict the vent rate and loss of coolant such that one charging pump can adequately provide makeup.

The system design with two valves in series in each flow path minimizes the possibility of reactor coolant pressure boundary leakage. Leakage can be detected by an increase in the amount of makeup required to maintain a normal level in the pressurizer. Leakage inside the containment is drained to the containment sump where it is monitored. Leakage is also detected by measuring the airborne activity of the containment atmosphere and monitoring the containment pressure.

The valves are normally closed, deenergized, and therefore maintain their deenergized position following a loss of power. Because there are two normally closed, deenergized valves in series in each flow path, power lockout to the valves at the control board is not considered.

Each flow path in the reactor vessel head vent is orificed to 3/8 inch to provide a safety class transition from Q1 to Q2. A postulated break, downstream from the orifice, or an inadvertently open flow path, is flow limited to the capacity from one centrifugal charging pump. The break of the reactor coolant vent system piping upstream from the orifice is defined as a loss-of-coolant accident. The 3/8-inch orifice also limits the flow of hydrogen from the reactor coolant system to allow a reasonable venting period without exceeding bulk containment combustible limits.

The following considerations were addressed in evaluating a suitable location for vent piping termination within the containment:

1. Conditions under which venting will be initiated.
2. Expected composition of vented fluid.
3. Fluid impingement on piping and components.

The primary function of the reactor coolant vent system has been defined as providing the operator an additional means of ensuring adequate core cooling when the presence of large amounts of steam and/or noncondensables may inhibit such cooling.

Since the generation of large amounts of hydrogen in the core could be associated with a breach of fuel cladding integrity, a significant release of fission products to the primary coolant and thus to the containment may be expected. However, vent system operation will not contribute to a condition where containment integrity would be compromised.

As discussed earlier, venting initiation and termination will be dictated by the stable bulk hydrogen concentration in containment, which will be controlled so as not to exceed 4% as a result of vent system operation.

Both reactor coolant vents will discharge into the fuel transfer canal/refueling cavity area. High pressure fluid discharged to this general area will not pose an impingement hazard. A loop

seal is maintained in the pressurizer vent line. The operation of the pressurizer vent path will result in a water slug traveling down the piping, which will result in sizable pipe stress loads. Pipe support designs assume conservatively high-water slug loads for the design of supports.

5.5.10.4 **Tests and Inspections**

Procedures will be developed to periodically test the operability of the reactor coolant vent system.

The operability testing of the reactor coolant vent system valves will be performed in accordance with the ASME Code for Category B valves.

5.5 REFERENCES

1. Letter, Vepco to NRC, Subject: *Evaluation of Thermal Sleeve Failure, Unit 1,* dated October 12, 1982 (Serial No. 574).
2. Letter, Vepco to NRC, Subject: *Evaluation of RCS Piping Thermal Sleeves, Unit 2,* dated August 4, 1982 (Serial No. 460).
3. R. A. Hill, J. F. O'Brien, D. C. McIntire, and R. T. Barlow, *Evaluation of Mispositioned ECCS Valves*, WCAP 9207, 1972.
4. Letter from R. H. Leasburg, Vepco, to H. R. Denton, NRC, Subject: *Relief Safety, Block Valve Test and Discharge Piping Analysis Requirements,* dated July 1, 1982 (Serial No. 392).
5. Letter from R. H. Leasburg, Vepco, to H. R. Denton, NRC, Subject: *Relief, Safety, Block Valve Test and Discharge Piping Analysis Requirements,* dated September 1, 1982 (Serial No. 514).
6. K. Cooper, et al., *Overpressure Protection for Westinghouse Pressurized Water Reactors*, WCAP-7769, Revision 1, 1972.
7. R. Salvatori, *Pipe Break for the LOCA Analysis of the Westinghouse Primary Coolant Loop*, WCAP 8082, June 1973 (proprietary).
8. R. Salvatori, *Pipe Break for the LOCA Analysis of the Westinghouse Primary Coolant Loop*, WCAP 8172, January 1975 (nonproprietary).
9. Letter Vepco to NRC, dated August 26, 1976 (Serial No. 212).
10. Letter from R. H. Leasburg, Vepco, to H. R. Denton, NRC, Subject: *Request for Additional Information, Reactor Coolant System Vents,* dated April 23, 1982 (Serial No. 127).
11. Letter from James P. O'Hanlon, Virginia Power, to NRC, *Proposed Technical Specification Change, Increased Pressurizer Safety Valve Lift Setpoint Tolerance,* dated July 26, 1995 (Serial No. 95-366).

12. Nuclear Safety Advisory Letter NSAL 99-005, *Reactor Coolant Pump Operation During a Loss of Seal Injection,* 6/1/99.

5.5 REFERENCE DRAWINGS

The list of Station Drawings below is provided for information only. The referenced drawings are not part of the UFSAR. This is not intended to be a complete listing of all Station Drawings referenced from this section of the UFSAR. The contents of Station Drawings are controlled by station procedure.

	Drawing Number	Description
1.	11715-FM-093A	Flow/Valve Operating Numbers Diagram: Reactor Coolant System; Loops 1, 2, & 3; Unit 1
	12050-FM-093A	Flow/Valve Operating Numbers Diagram: Reactor Coolant System; Loops 1, 2, & 3; Unit 2
2.	11715-FM-093B	Flow/Valve Operating Numbers Diagram: Reactor Coolant System, Unit 1
	12050-FM-093B	Flow/Valve Operating Numbers Diagram: Reactor Coolant System, Unit 2
3.	11715-FM-093E	Flow/Valve Operating Numbers Diagram: Reactor Coolant Pump Oil Collection, Unit 1
	12050-FM-093E	Flow/Valve Operating Numbers Diagram: Reactor Coolant Pump Oil Collection, Unit 2
4.	11715-FM-094A	Flow/Valve Operating Numbers Diagram: Residual Heat Removal System, Unit 1
	12050-FM-094A	Flow/Valve Operating Numbers Diagram: Residual Heat Removal System, Unit 2

Table 5.5-1
REACTOR COOLANT PUMP DESIGN PARAMETERS

Parameter	Value
Design pressure	2485 psig
Design temperature	650°F
Capacity/pump	92,800 gpm
Developed head	312 ft
NPSH required	170 ft
Suction temperature	546.5°F
RPM nameplate rating	1200
Discharge nozzle, i.d.	27-1/2 in.
Suction nozzle, i.d.	31 in.
Overall unit height	25 ft. 6 in.
Water volume	56 ft^3
Moment of inertia	95,000 ft^2-lb
Weight, dry	179,500 lb
Motor	
Type	ac, induction, single-speed, air-cooled
Power	7000 hp
Voltage	4000
Insulation class	B thermolastic epoxy
Phase	3
Frequency	60
Running (nominal values)	
Current, hot amp	860
Current, cold amp	1123
Input (hot reactor coolant)	5493 kW
Input (cold reactor coolant)	7087 kW
Motor air-to-water coolers	2
Seal water injection	8 gpm
Seal water return	3 gpm

Table 5.5-2
REACTOR COOLANT PUMP QUALITY ASSURANCE PROGRAM

	Examination			
	RT	UT	PT	MT
Castings	Yes		Yes	
Forgings				
Main shaft		Yes	Yes	
Main studs		Yes	Yes	
Flywheel (rolled plate)		Yes	Yes (for base)	
Weldments				
Circumferential	Yes		Yes	
Instrument connections			Yes	

Key: RT = radiographic
UT = ultrasonic
PT = dye penetrant
MT = magnetic particle

Table 5.5-3
STEAM GENERATOR DESIGN DATA

Parameter	Value
Design pressure, reactor coolant side	2485 psig
Design pressure, steam side	1085 psig
Design temperature, reactor coolant side	650°F
Design temperature, steam side	600°F
Total heat transfer surface area	54,500 ft^2
Maximum moisture carryover	0.10 wt%
Overall height	67 ft. 8 in.
Number of U-tubes	3592
U-tube o.d.	0.875 in.
Tube wall thickness, nominal	0.050
Number of manways	4
I.d. of manways	16 in.
Number of handholes	6
I.d. of handholes	6 in.
Number of inspection ports	2
I.d. of inspection port	4 in.

Table 5.5-4
STEAM GENERATOR QUALITY ASSURANCE PROGRAM

	Examination				
	RT	UT	PT	MT	ET
Tubesheet					
Forging		Yes		Yes	
Cladding		Yes [a]	Yes [b]		
Channel head					
Casting	Yes			Yes	
Forging		Yes		Yes	
Cladding		Yes	Yes		
Secondary shell and head					
Plates		Yes			
Forgings		Yes			
Tubes		Yes			Yes
Nozzles (forgings)		Yes		Yes	
Weldments					
Shell, longitudinal	Yes			Yes	
Shell, circumferential	Yes			Yes	
Cladding (channel head-tubesheet joint cladding restoration)		Yes	Yes		
Steam and feedwater nozzle to shell	Yes			Yes	
Support brackets				Yes	
Tube to tubesheet			Yes		
Instrument connections (primary and secondary)				Yes	
Temporary attachments after removal				Yes	
After hydrostatic test (all welds where accessible)				Yes	
Nozzle safe ends (if forgings)	Yes		Yes		
Nozzle safe ends (if weld deposit)			Yes		

Key: RT = radiographic
UT = ultrasonic
PT = dye penetrant
MT = magnetic particle
ET = eddy current

a. Flat surfaces only.
b. Weld deposit areas only.

Table 5.5-5
REACTOR COOLANT PIPING DESIGN PARAMETERS

Parameter	Value
Reactor inlet piping, i.d.	27-1/2 in.
Reactor inlet piping, nominal wall thickness	2.32 in.
Reactor outlet piping, i.d.	29 in.
Reactor outlet piping, nominal wall thickness	2.44 in.
Coolant pump suction piping, i.d.	31 in.
Coolant pump suction piping, nominal wall thickness	2.59 in.
Pressurizer surge line piping, i.d.	11.18 in.
Pressurizer surge line piping, nominal wall thickness	1.406 in.
Water volume, all loops and surge line	1455 ft^3
Design/operating pressure	2485/2235 psig
Design temperature	650°F
Design temperature (pressurizer surge line)	680°F
Design pressure and temperature of pressurizer relief line	
From pressurizer to safety valve	2485 psig, 650°F
From safety valve to pressurizer relief tank	600 psig, 650°F

Table 5.5-6
REACTOR COOLANT THERMAL SLEEVE REMOVAL

Unit 1

Line Number[a]	To Line Number[a]	
6 in.-RC-17-1502-Q1	27-1/2 in.-RC-3-2501R-Q1	(loop 1)
3 in.-CH-1-1502-Q1	27-1/2 in.-RC-6-2501R-Q1	(loop 2)
12 in.-RC-23-1502-Q1	27-1/2 in.-RC-6-2501R-Q1	(loop 2)

Unit 2

Line Number[a]	To Line Number[a]	
12 in.-RC-423-1502-Q1	27-1/2 in.-RC-406-2501R-Q1	(loop 2)
12 in.-RC-424-1502-Q1	27-1/2 in.-RC-409-2501R-Q1	(loop 3)
3 in.-CH-401-1502-Q1	27-1/2 in.-RC-406-2501R-Q1	(loop 2)
6 in.-RC-420-1502-Q1	27-1/2 in.-RC-409-2501R-Q1	(loop 3)

a. Lines are identified in Reference Drawings 1 through 3.

Table 5.5-7
REACTOR COOLANT PIPING QUALITY ASSURANCE PROGRAM

	Examination		
	RT	UT	PT
Fittings and pipe (castings)	Yes		Yes
Fittings and pipe (forgings)		Yes	Yes
Weldments			
Circumferential	Yes		Yes
Nozzle to runpipe (except no RT for nozzles less than 4 in.)	Yes		Yes
Instrument connections		Yes	

Key: RT = radiographic
UT = ultrasonic
PT = dye penetrant

Table 5.5-8
DESIGN BASES FOR RESIDUAL HEAT REMOVAL SYSTEM OPERATION

Parameter	Value
Residual heat removal system startup	4 hours after reactor shutdown
Reactor coolant system initial pressure	approximately 450 psia
Reactor coolant system initial temperature	approximately 350°F
Component cooling water design temperature	105°F
Cooldown time, hours after initiation of residual heat removal system operation	approximately 16
Reactor coolant system cold temperature	140°F
Decay heat generation at 20 hours after reactor shutdown	64×10^6 Btu/hr

Table 5.5-9
RESIDUAL HEAT REMOVAL SYSTEM CODES AND CLASSIFICATIONS

Component	Code
Residual heat removal pump	ASME,[a] Class II
Residual heat exchanger	
Tube side	ASME, Section III,[b] Class C
Shell side	ASME, Section VIII[c]
Piping	ANSI B31.7[d]
Valves	ANSI B16.5[e]

a. Draft ASME Code for Pumps and Valves for Nuclear Power, November 1968.
b. ASME Code, Section III, Nuclear Vessels, 1968 Edition.
c. ASME Code, Section VIII, Pressure Vessels, 1968 Edition.
d. ANSI, B31.7, Nuclear Power Piping, 1969 Edition.
e. ANSI, B16.5, Steel Pipe Flanges and Flanged Fittings, 1968 Edition.

Table 5.5-10
RESIDUAL HEAT REMOVAL SYSTEM COMPONENT DATA

Parameter		Value
Residual heat removal pump		
Number		2
Design pressure		600 psig
Design temperature		400°F
Design flow		4000 gpm
Design head		225 ft
Residual heat exchanger		
Number		2
Design heat removal capacity		30.5×10^6 Btu/hr
	Tube-side	Shell-side
Design pressure	600 psig	150 psig
Design temperature	400°F	200°F
Design flow	2.0×10^6 lb/hr	4.45×10^6 lb/hr
Inlet temperature	140°F	105°F
Outlet temperature	123°F	113°F
Material	Austenitic stainless steel	Carbon steel
Fluid	Reactor coolant	Component cooling water
Piping and Valves	Isolation Valves and Piping	Valves and Piping in the Isolated Loop
Design pressure	2485 psig	600 psig
Design temperature	650°F	400°F
Material	Austenitic stainless steel	Austenitic stainless steel
Pressure relief valve		Valve
Relief pressure		467 psig
Relief capacity		900 gpm
Design pressure		600 psig
Design temperature		400°F
Material		Austenitic stainless steel

Table 5.5-11
PRESSURIZER DESIGN DATA

Parameter	Value
Design pressure	2485 psig
Design temperature	680°F
Surge line nozzle diameter	14 in.
Heatup rate of pressurizer using heaters only	55°F/hr
Internal volume	1400 ft^3

Table 5.5-12
REACTOR COOLANT SYSTEM DESIGN PRESSURE TYPICAL SETTINGS (PSIG)

Parameter	Value
Design pressure	2485
Operating pressure	2235
Safety valves	2485
Power relief valves	2335
Pressurizer spray valves (begin to open)	2260
Pressurizer spray valves (full open)	2310
High-pressure trip	2360
High-pressure alarm	2335
Low-pressure trip (typical, but variable)	1870
Pressurizer power relief valve auto block and alarm (PORVs blocked below setpoint)	2000 (P-11)
Low-low pressure safety injection	1780
Hydrostatic test pressure	3107
Backup heaters on	2210
Proportional heaters (begin to operate)	2250
Proportional heaters (full operation)	2220

Table 5.5-13
PRESSURIZER QUALITY ASSURANCE PROGRAM

	Examination			
	RT	UT	PT	MT
Heads				
Plates		Yes		
Cladding			Yes	
Shell				
Plates		Yes		
Cladding			Yes	
Heaters				
Tubing[a]		Yes	Yes	
Centering of element	Yes			
Nozzles (forgings)		Yes	Yes[b]	Yes[b]
Weldments				
Shell, longitudinal	Yes			Yes
Shell, circumferential	Yes			Yes
Cladding			Yes	
Nozzle safe end (if forging)	Yes		Yes	
Instrument connections			Yes	
Support skirt	Yes			Yes
Temporary attachments after removal				Yes
All welds and plate heads after hydrostatic tests				Yes
Final assembly				
All accessible exterior surfaces after hydrostatic test				Yes

Key: RT = radiographic
UT = ultrasonic
PT = dye penetrant
MT = magnetic particle

a. Or a UT and ET.
b. MT or PT.

Table 5.5-14
PRESSURIZER RELIEF TANK DESIGN DATA

Parameter	Value
Design pressure	100 psig
Rupture disk release pressure	100 ± 5 psig
Design temperature	340°F
Total rupture disk relief capacity at 100 psig	1.6×10^6 lb/hr

Table 5.5-15
REACTOR COOLANT SYSTEM BOUNDARY VALVE DESIGN PARAMETERS

Parameter	Value
Reactor coolant loop stop valves	
Design/normal operating pressure	2485/2235 psig
Preoperational plant hydrotest	3107 psig
Design temperature	650°F
Hot-leg valve size, nominal	29 in.
Cold-leg valve size, nominal	27-1/2 in.
Open/close travel time	210 sec
Other reactor coolant boundary valves	
Design/normal operating pressure	2485/2235 psig
Preoperational plant hydrotest	3107 psig
Design temperature	650°F

Table 5.5-16
REACTOR COOLANT SYSTEM VALVE QUALITY ASSURANCE PROGRAM

	Examination		
	RT	UT	PT
Valves			
Castings	Yes		Yes
Forgings (no UT for valves 2 in. and smaller)		Yes	Yes

Key: RT = radiographic
UT = ultrasonic
PT = dye penetrant

Table 5.5-17
PRESSURIZER VALVES DESIGN PARAMETERS

Parameter	Value
Pressurizer spray control valves	
Number	2
Design pressure	2485 psig
Design temperature	650°F
Expected flow for both valves full open	850-880 gpm
Fluid temperature	547°F
Pressurizer safety valves	
Number	3
Maximum relieving capacity (ASME rated flow), each	380,000 lb/hr
Set pressure	2485 psig
Fluid	Saturated steam
Backpressure	
Normal	3-5 psig
Expected during discharge	350-500 psig
Pressurizer power relief valves	
Number	2
Design pressure	2485 psig
Design temperature	650°F
Relieving capacity, maximum at 2335 psig, each	210,000 lb/hr
Fluid	Saturated steam

Table 5.5-18
MAXIMUM STEAM GENERATOR AND REACTOR COOLANT PUMP
FOOT LOADS (KIPS)

Component	Direction	Total [a]
Steam generator	Tangential	520
	Vertical compression	960
	Vertical tension	714
Reactor coolant pump	Tangential	381
	Vertical compression	1197
	Vertical tension	946

a. Faulted condition, thermal + operating pressure + deadweight + SRSS of seismic (DBE) and pipe rupture.

Table 5.5-19
MAXIMUM LOAD (KIPS), SUPPORTS

Concrete Reactions From	Node[a]	Direction	Loads			
			Pipe Rupture	Seismic (DBE)	Normal[d]	Total[b]
Steam Generator Supports	52	Z	±685[c]	±688	±268	1239
	61	Z	±529[c]	±424	±387	1065
	71	Y	±461[c]	±695	±62	896
	82	Y	±236[c]	±322	±99	499
	88	Z	±824[c]	±707	±148	1234
	97	Z	±615[c]	±501	±178	971
Pump Columns	9	Z	±362[c]	±430	±461	1023
	13	Z	±631[c]	±239	±227	901
	16	Z	±529[c]	±264	±188	779

a. Refer to Figure 5.5-10.
b. Obtained by adding normal to the SRSS of pipe rupture and seismic.
c. Loads are conservatively obtained by the absolute sum of the reactions resulting from each component of force and moment applied to the support frames.
d. Deadweight + thermal + operating pressure.

Table 5.5-20
MAXIMUM LOAD (KIPS), SNUBBERS AND STRUTS

Concrete Reactions From	Node[a]	Direction	Loads			
			Normal[c]	Pipe Rupture	Seismic (DBE)	Total[b]
Steam Generator Upper Supports	110	Y	±52	±644	±282	755
	112	X	0	±561	±355	664
	115	Y	±52	±644	±282	755
	118	X	0	±561	±355	664

a. Refer to Figure 5.5-10
b. Normal plus SRSS of pipe rupture and seismic.
c. Deadweight + thermal + operating pressure.

Figure 5.5-1
REACTOR COOLANT PUMP

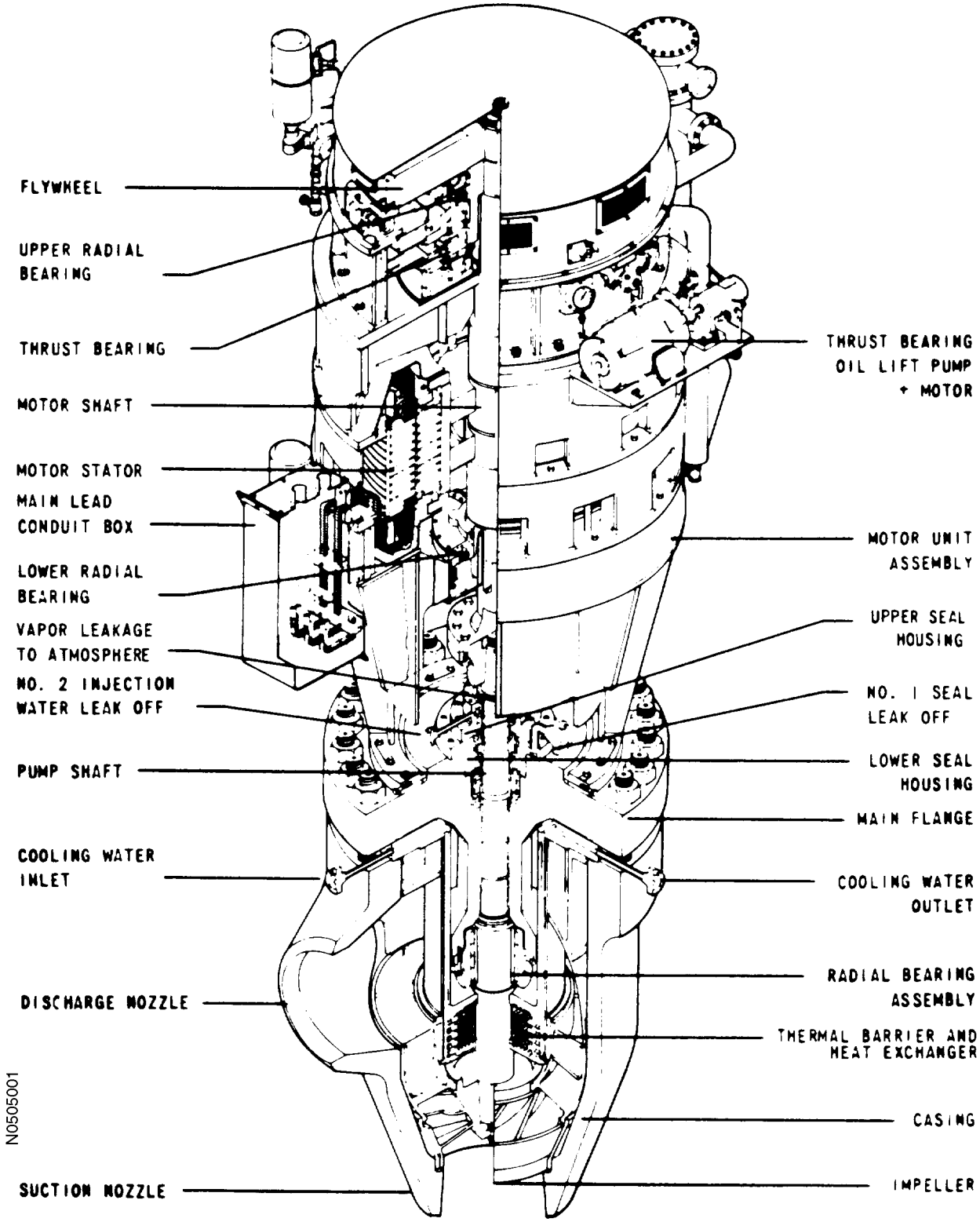

Figure 5.5-2
REACTOR COOLANT PUMP ESTIMATED
PERFORMANCE CHARACTERISTIC

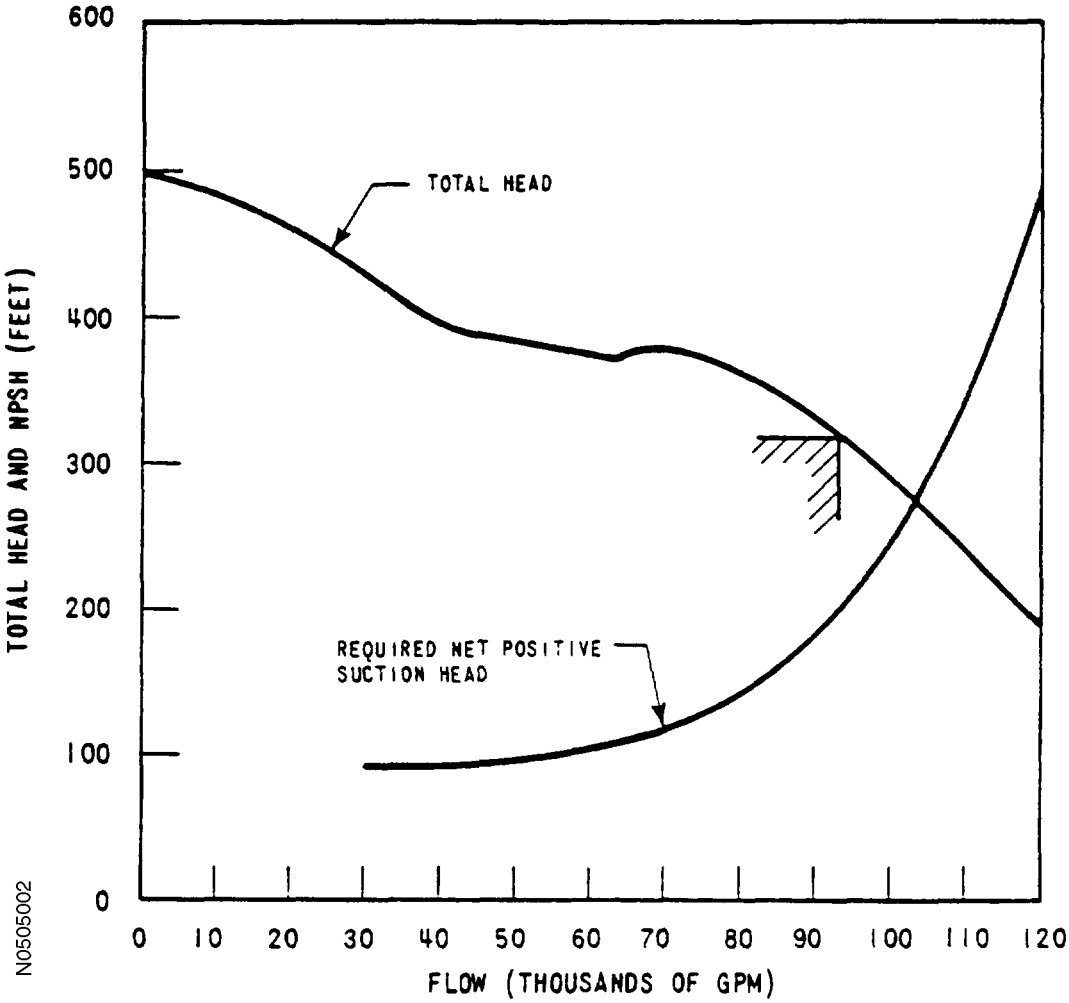

Figure 5.5-3
51F SERIES STEAM GENERATOR

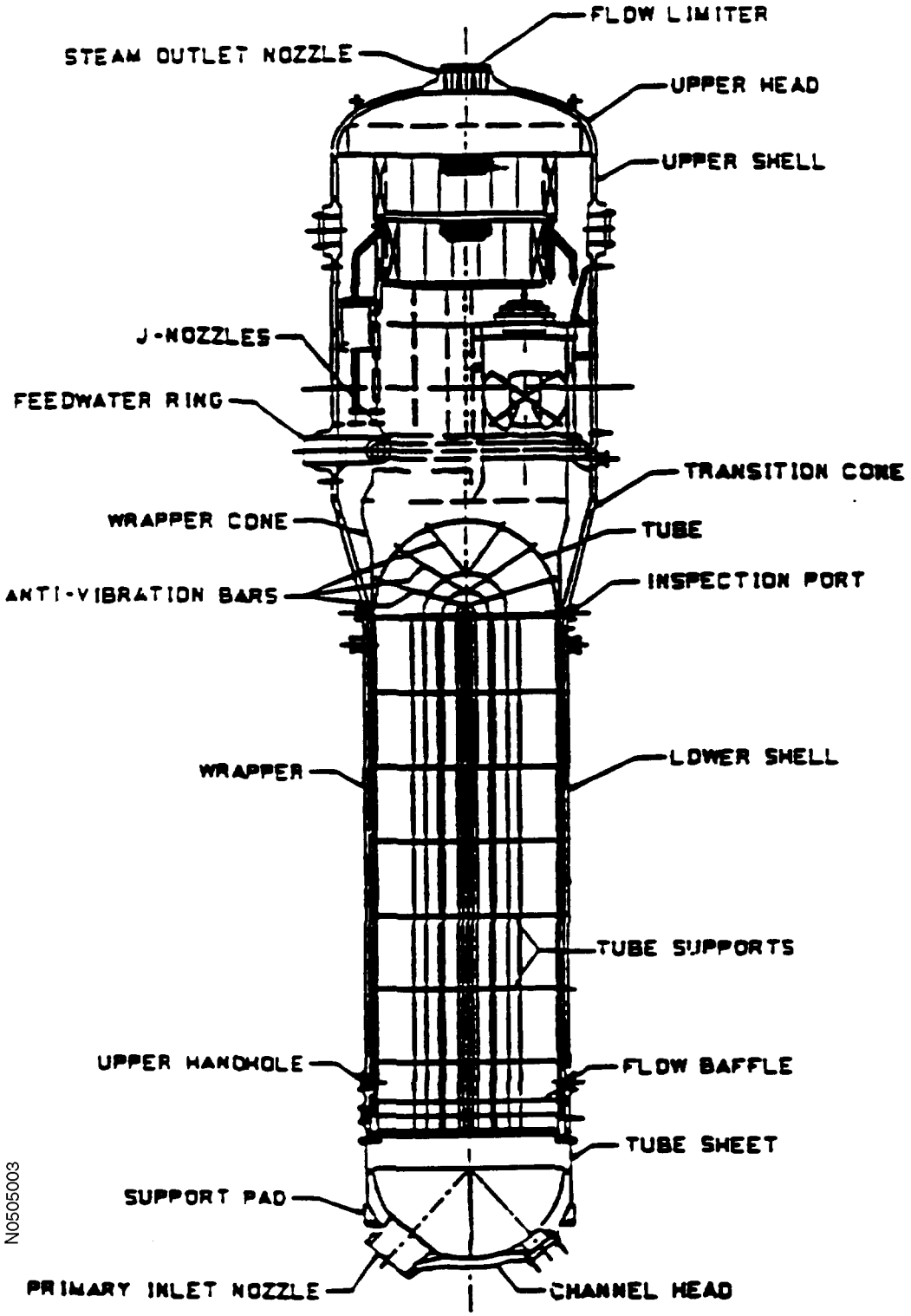

Figure 5.5-4
RESIDUAL HEAT REMOVAL SYSTEM

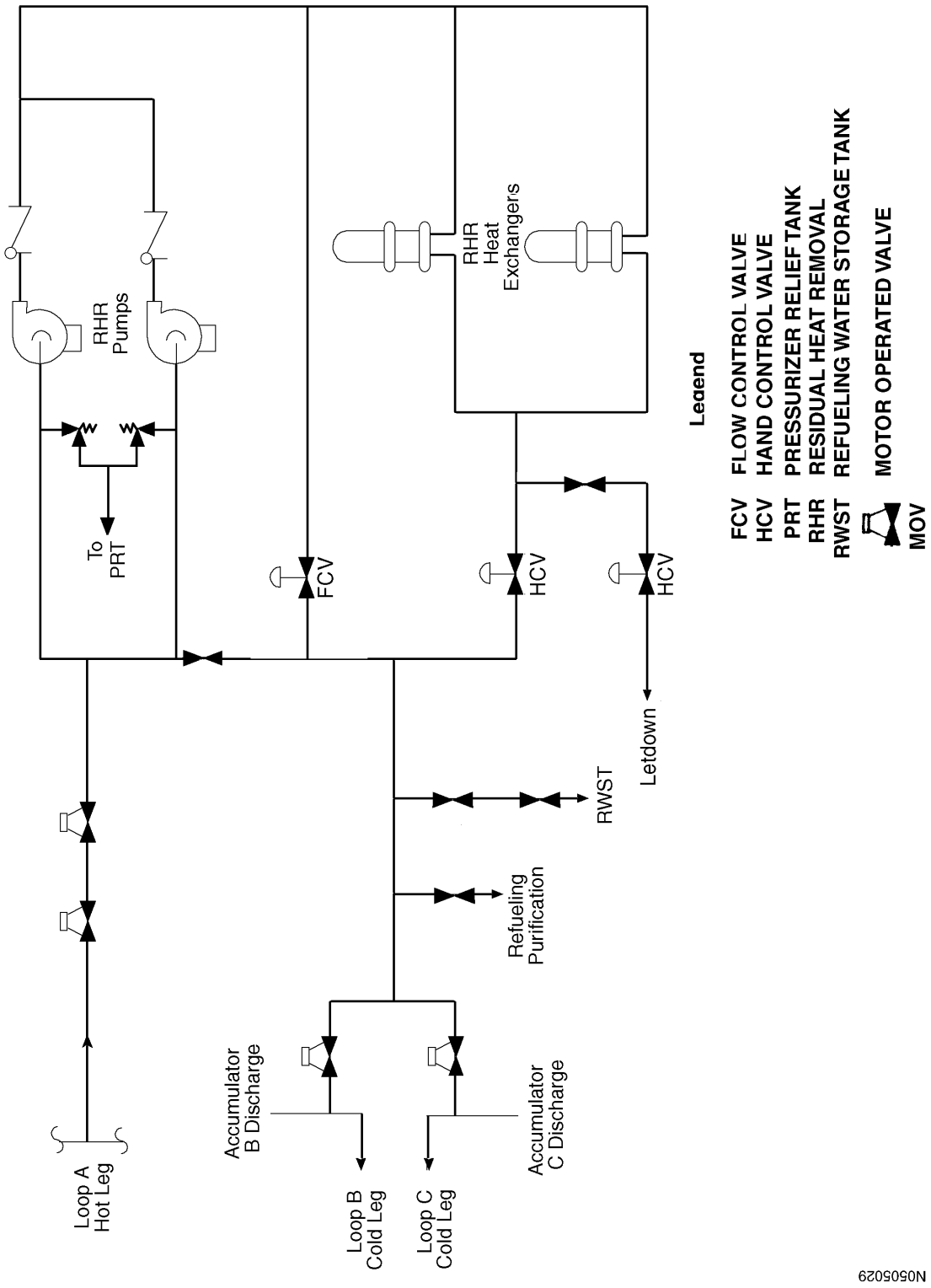

Figure 5.5-5
PRESSURIZER

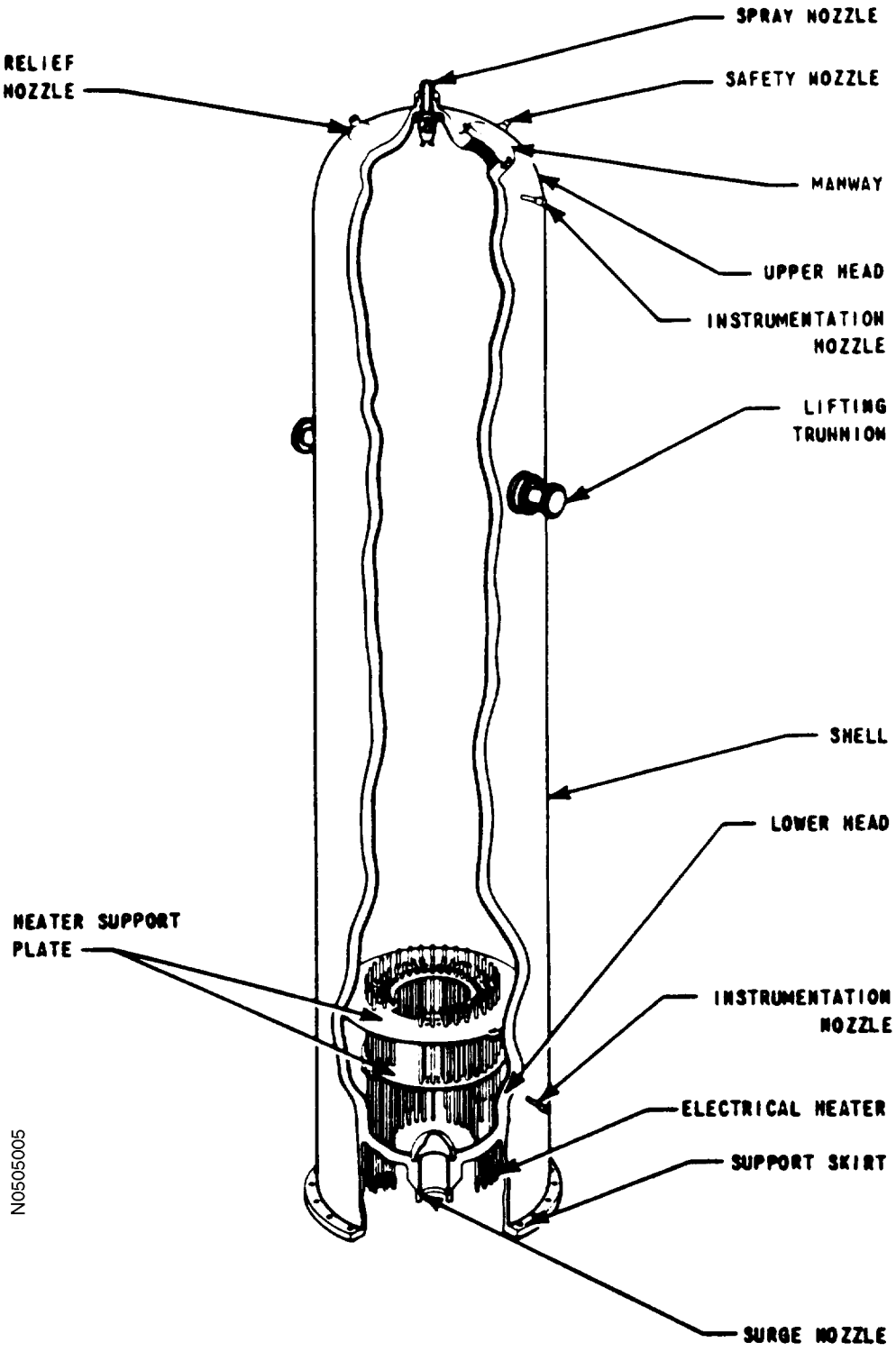

Figure 5.5-6
REACTOR COOLANT LOOP STOP VALVE

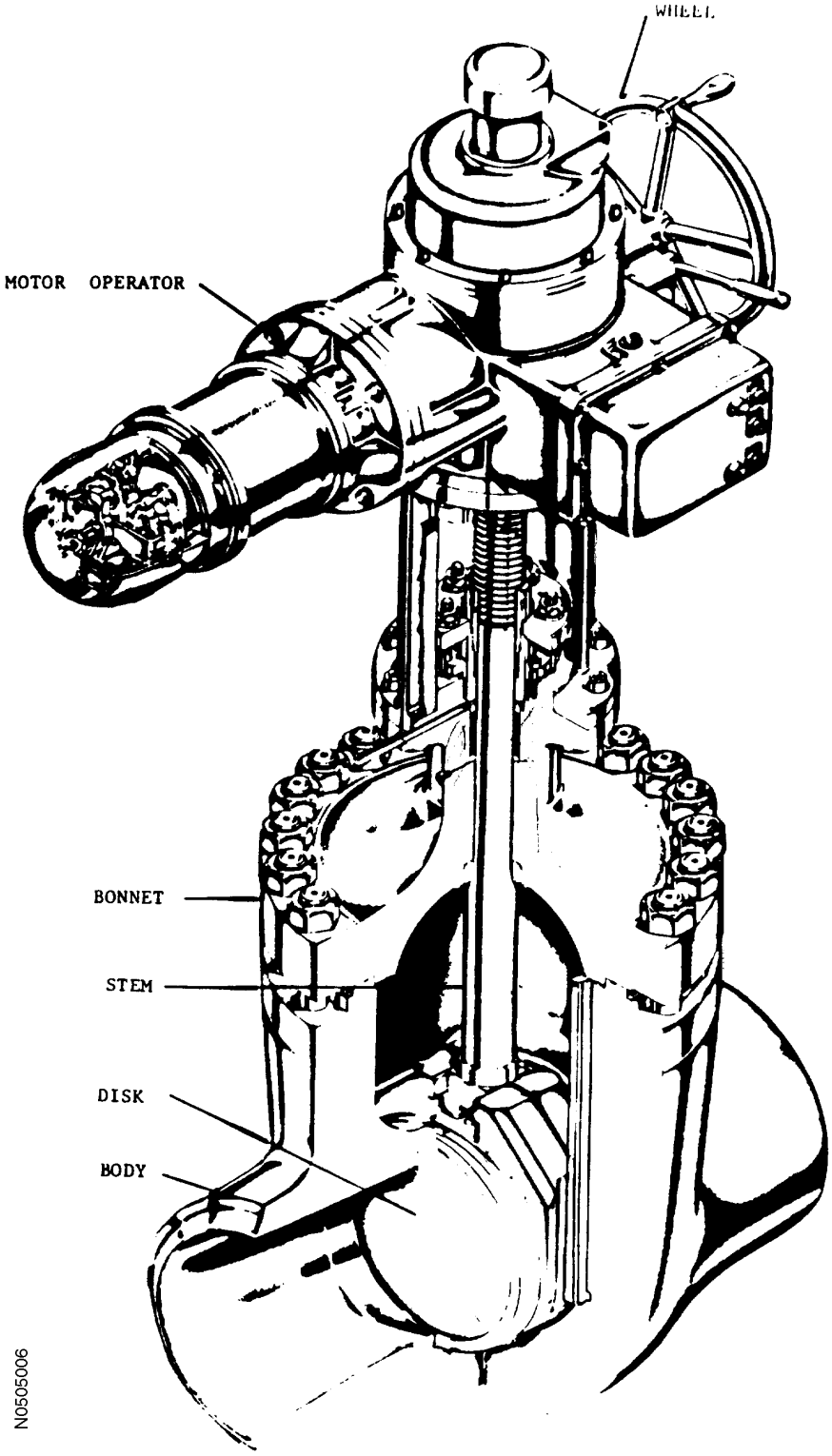

Figure 5.5-7
REACTOR VESSEL SUPPORT

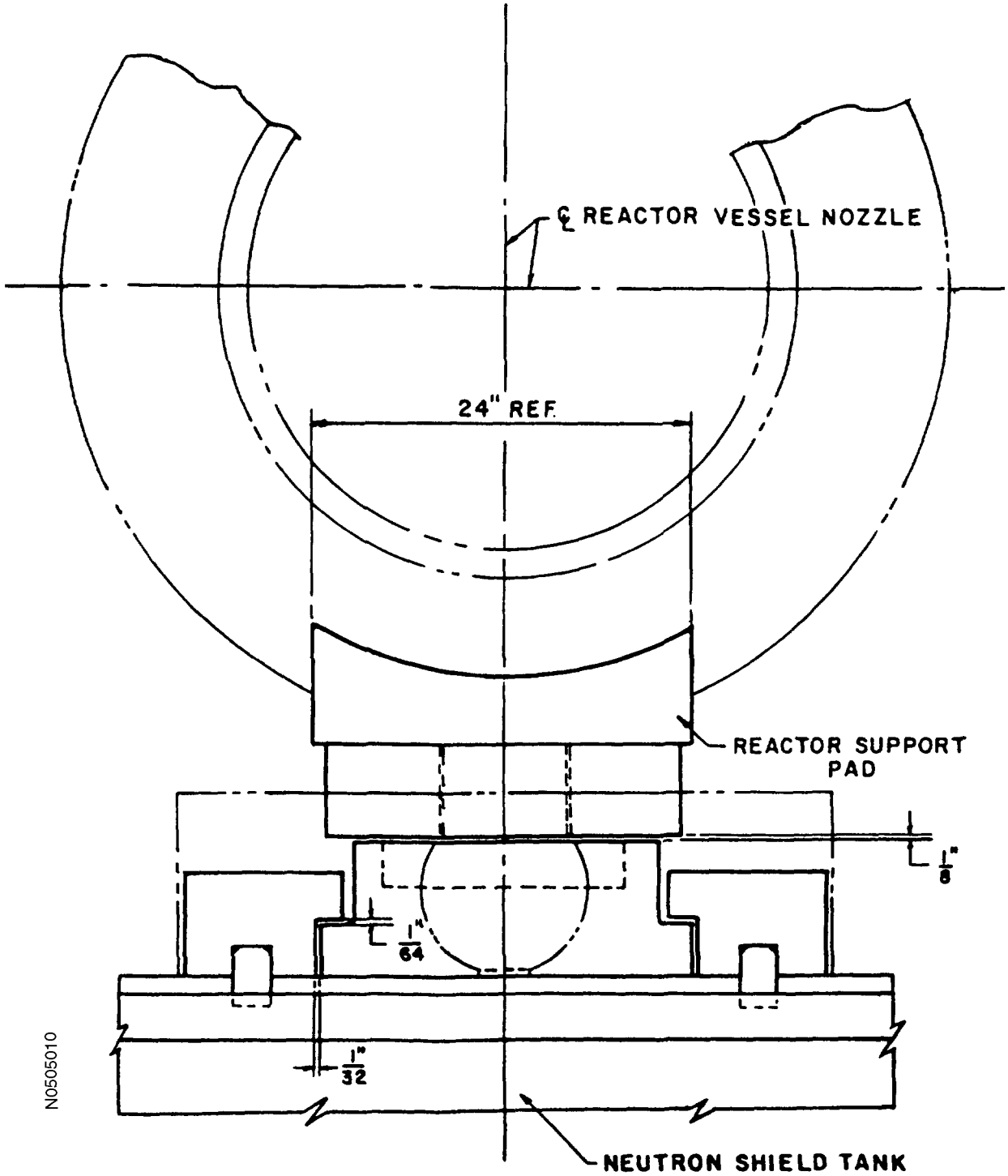

Figure 5.5-8
STEAM GENERATOR AND REACTOR COOLANT PUMP

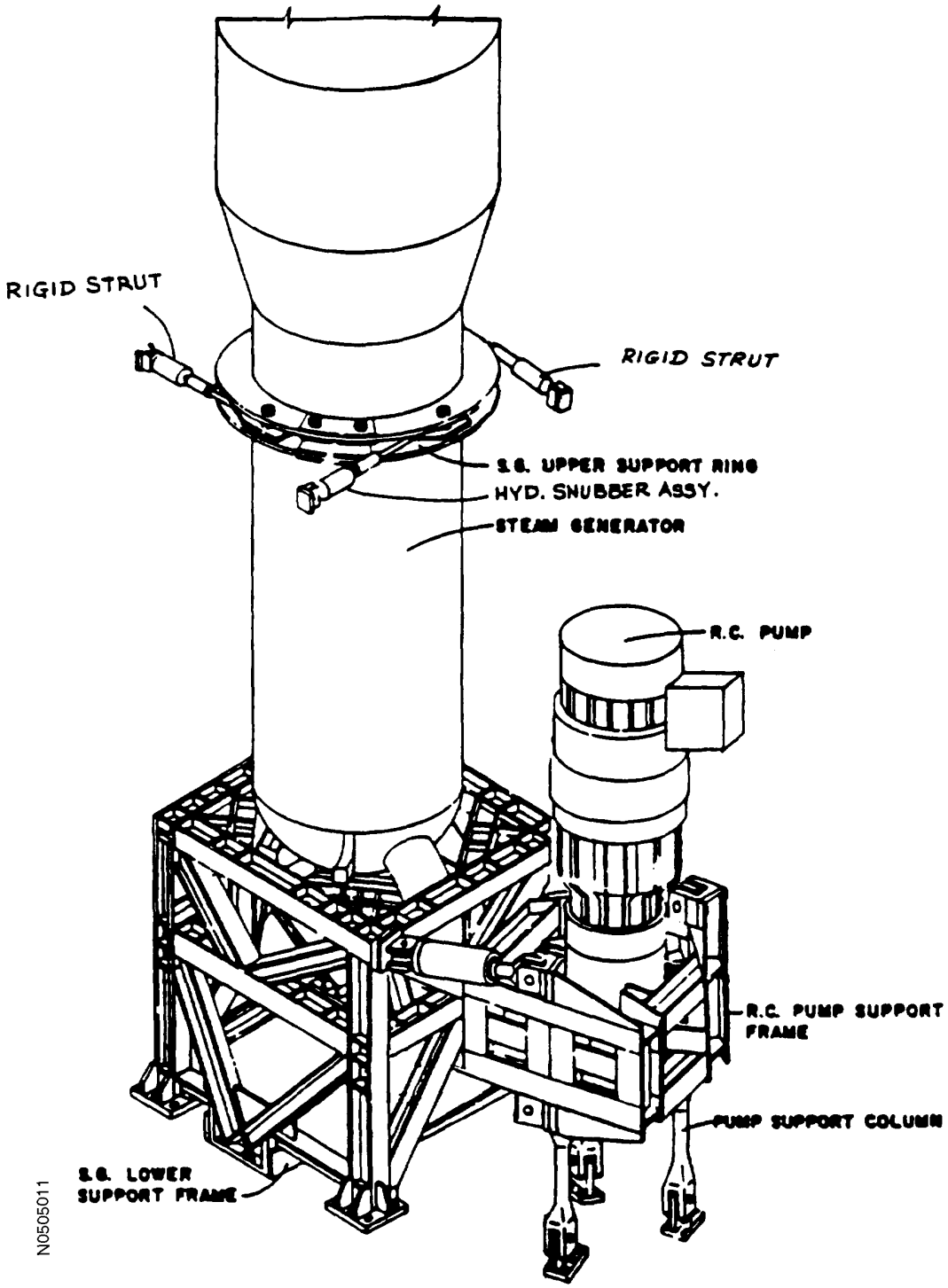

Figure 5.5-9
STEAM GENERATOR AND REACTOR COOLANT PUMP
LOWER SUPPORT

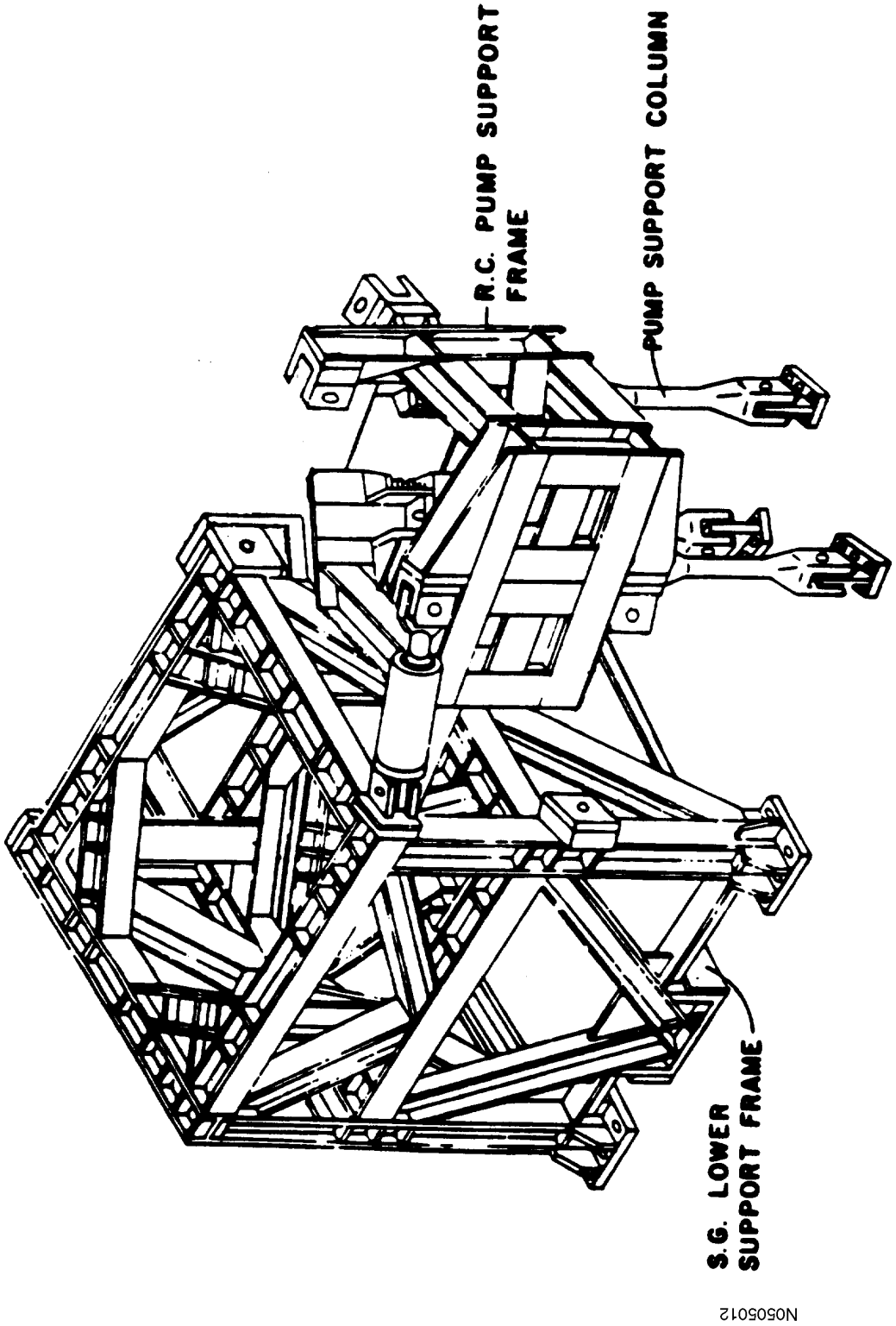

Figure 5.5-10
LOAD PATHS INTO REINFORCED CONCRETE

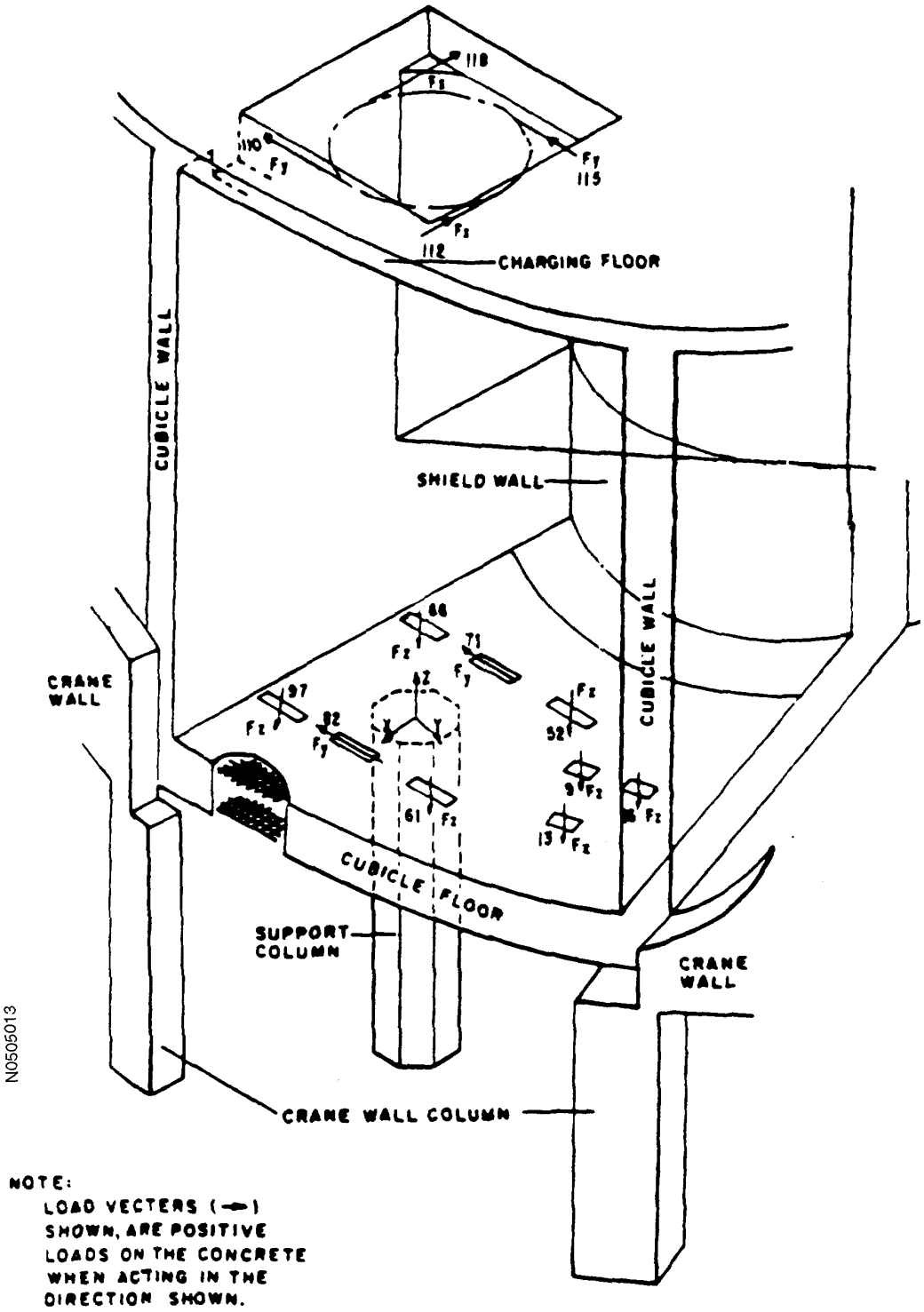

Figure 5.5-11 (SHEET 1 OF 2)
PRESSURIZER SUPPORT

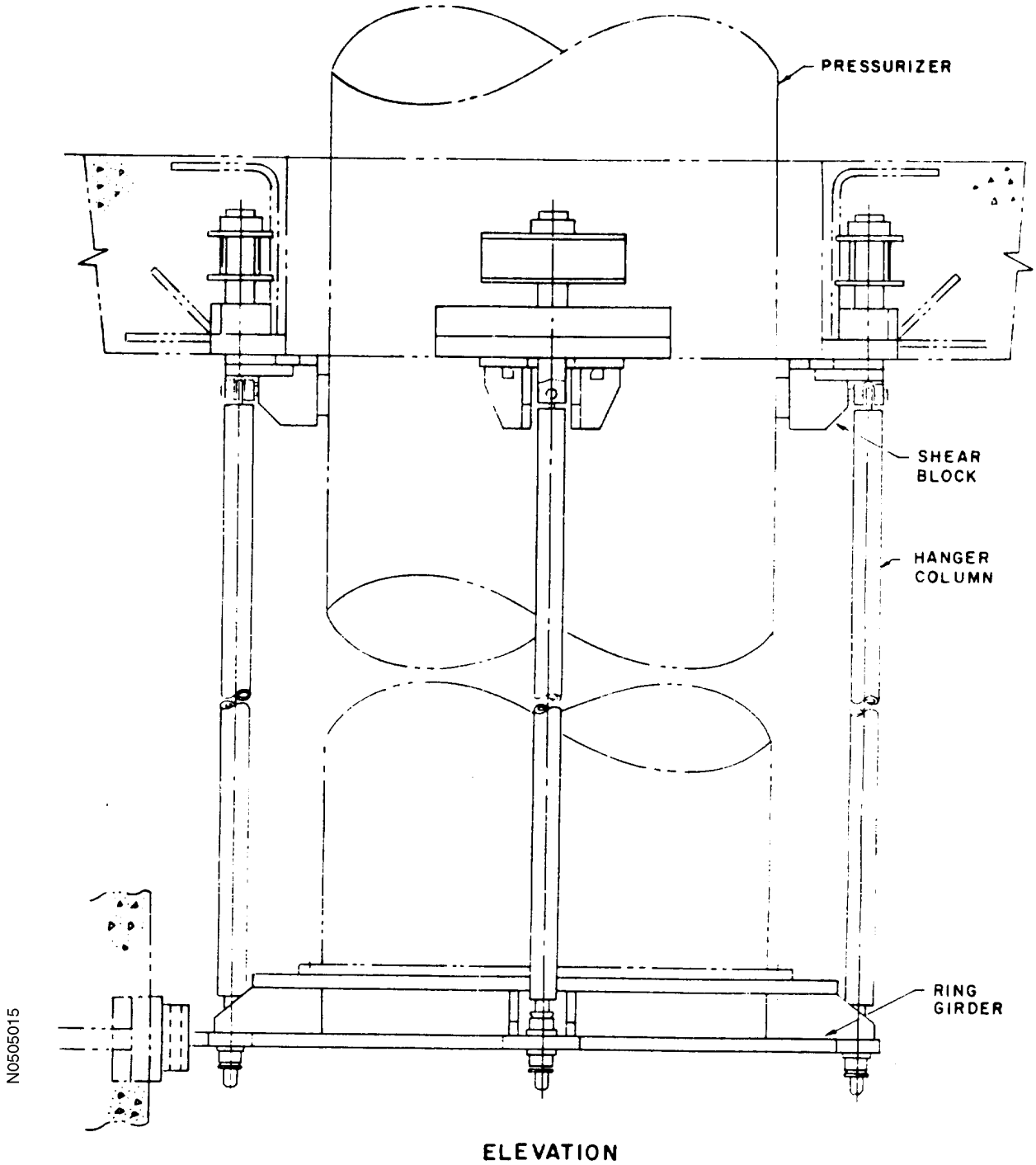

Figure 5.5-11 (SHEET 2 OF 2)
PRESSURIZER SUPPORT

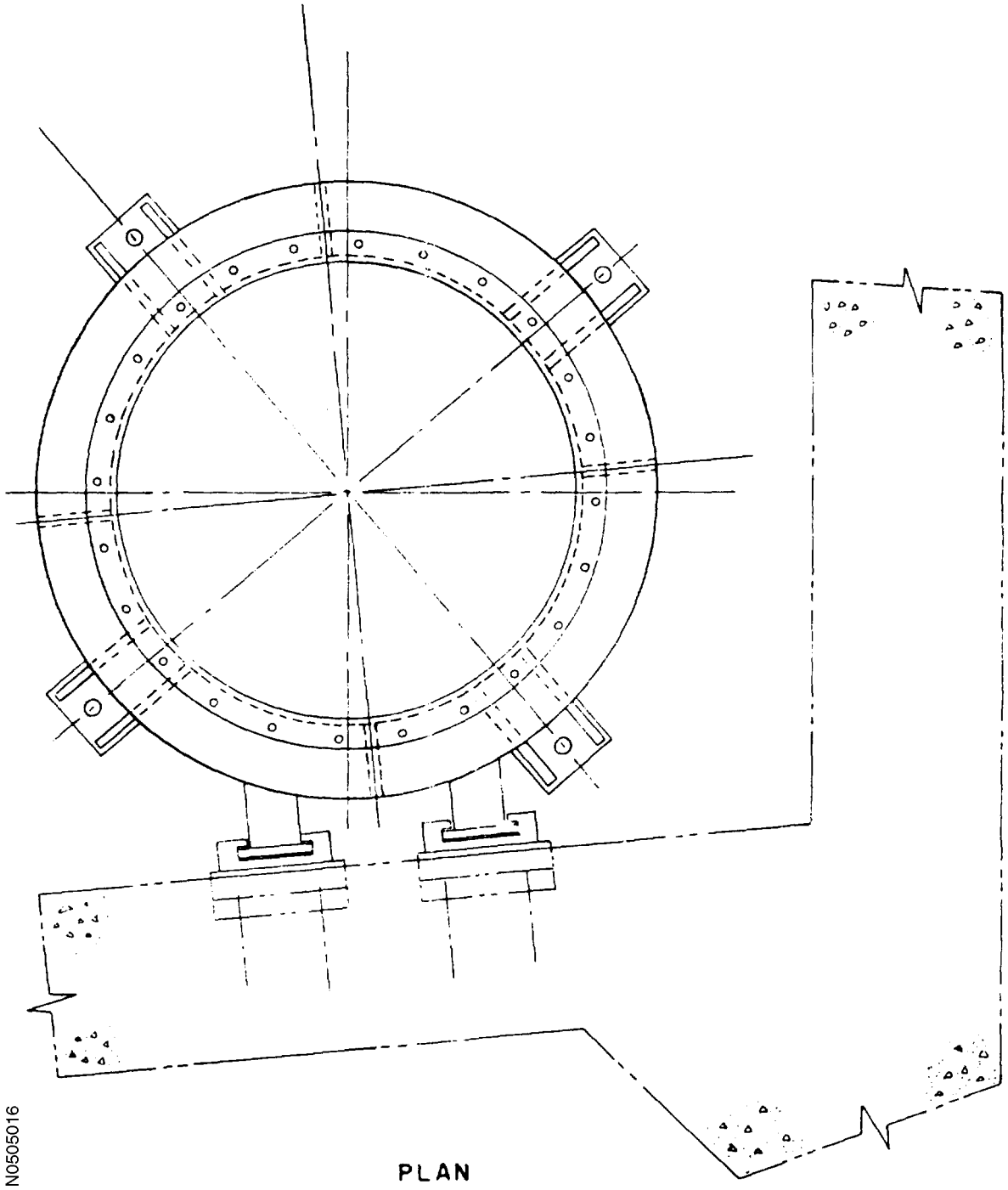

Figure 5.5-12 (SHEET 1 OF 2)
DYNAMIC MODEL OF STEAM GENERATOR AND PUMP SUPPORTS

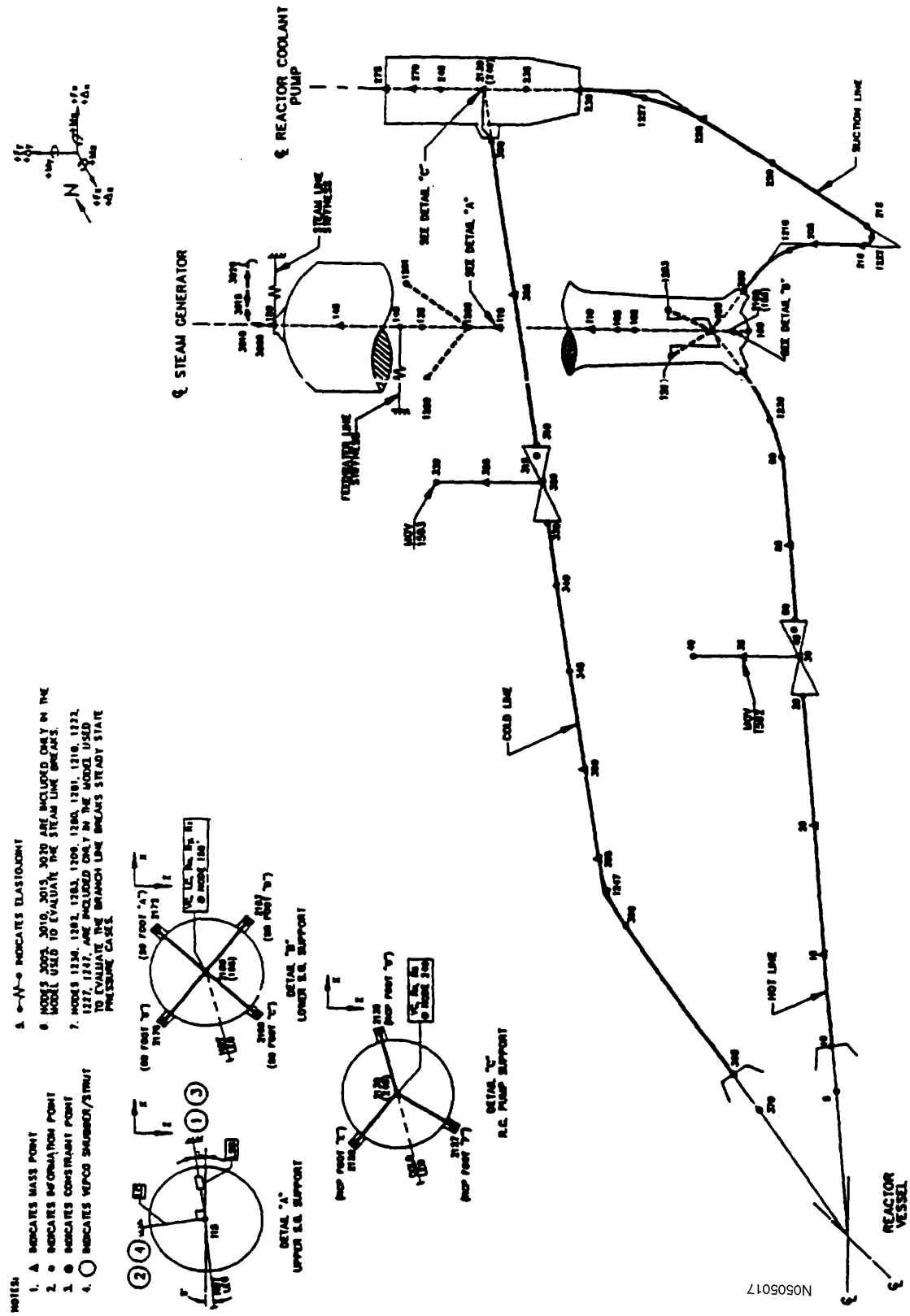

Figure 5.5-12 (SHEET 2 OF 2)
DYNAMIC MODEL OF STEAM GENERATOR AND PUMP SUPPORTS

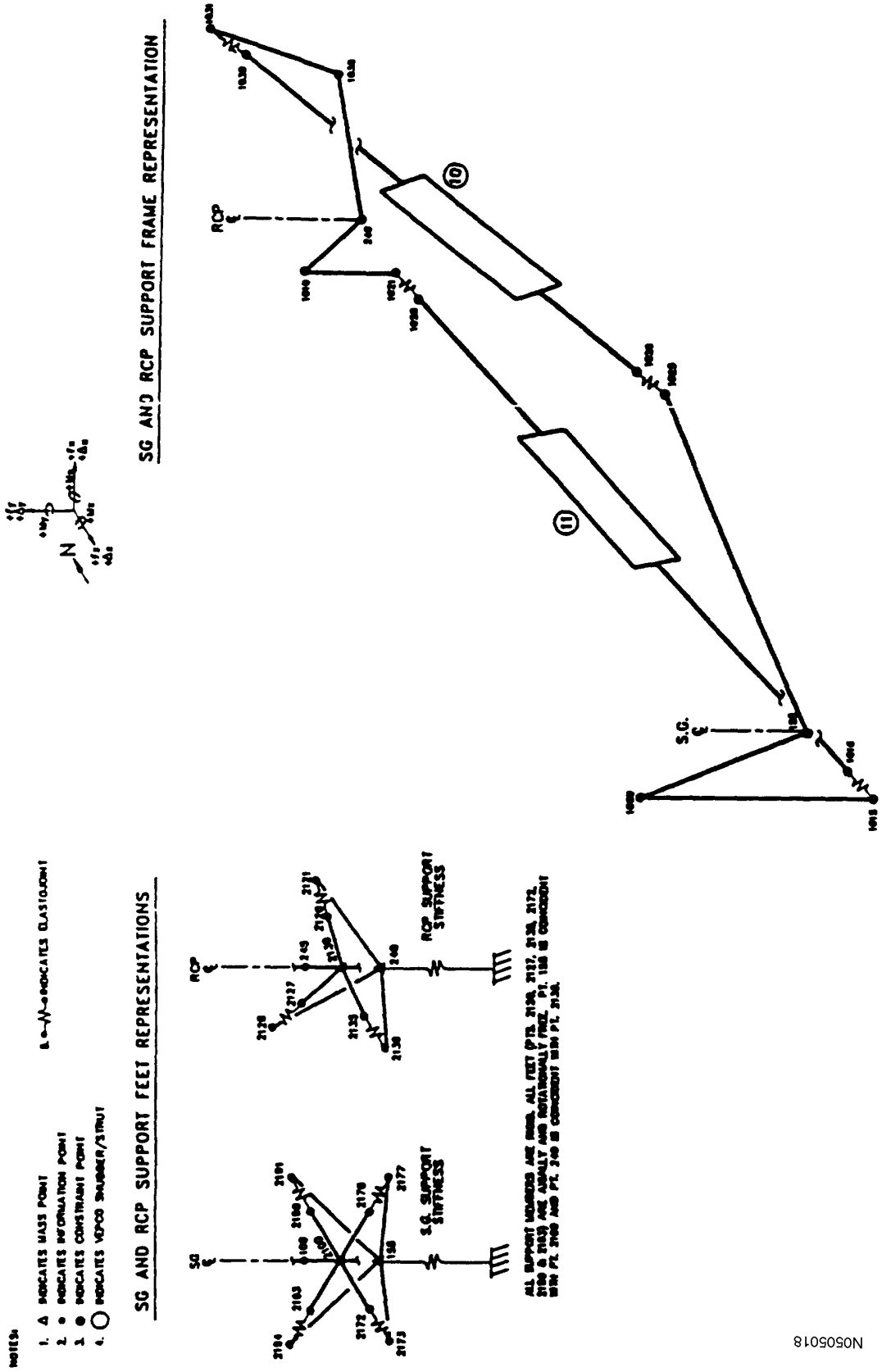

Figure 5.5-13
STEAM GENERATOR-PUMP SUPPORTS STRESS MODEL

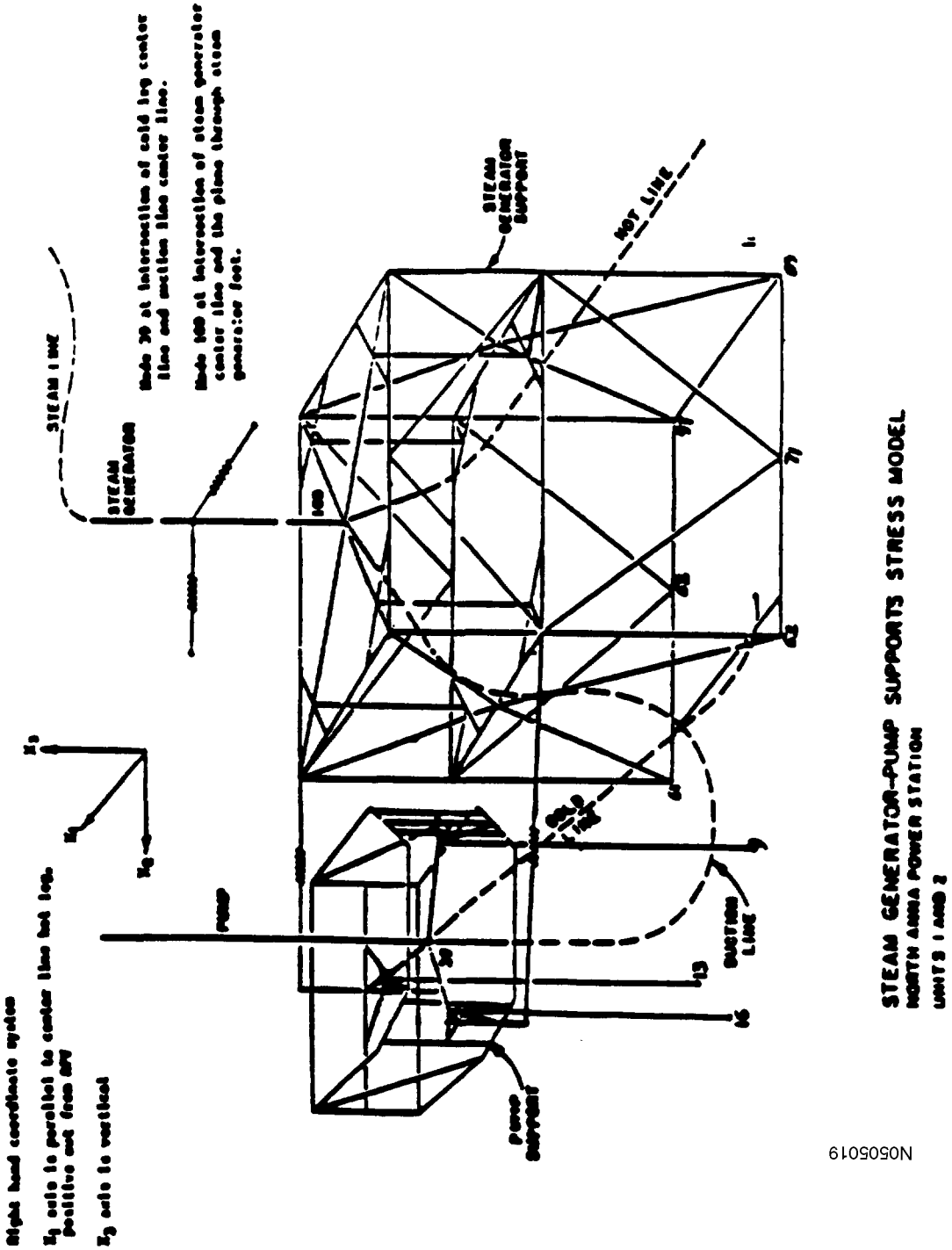

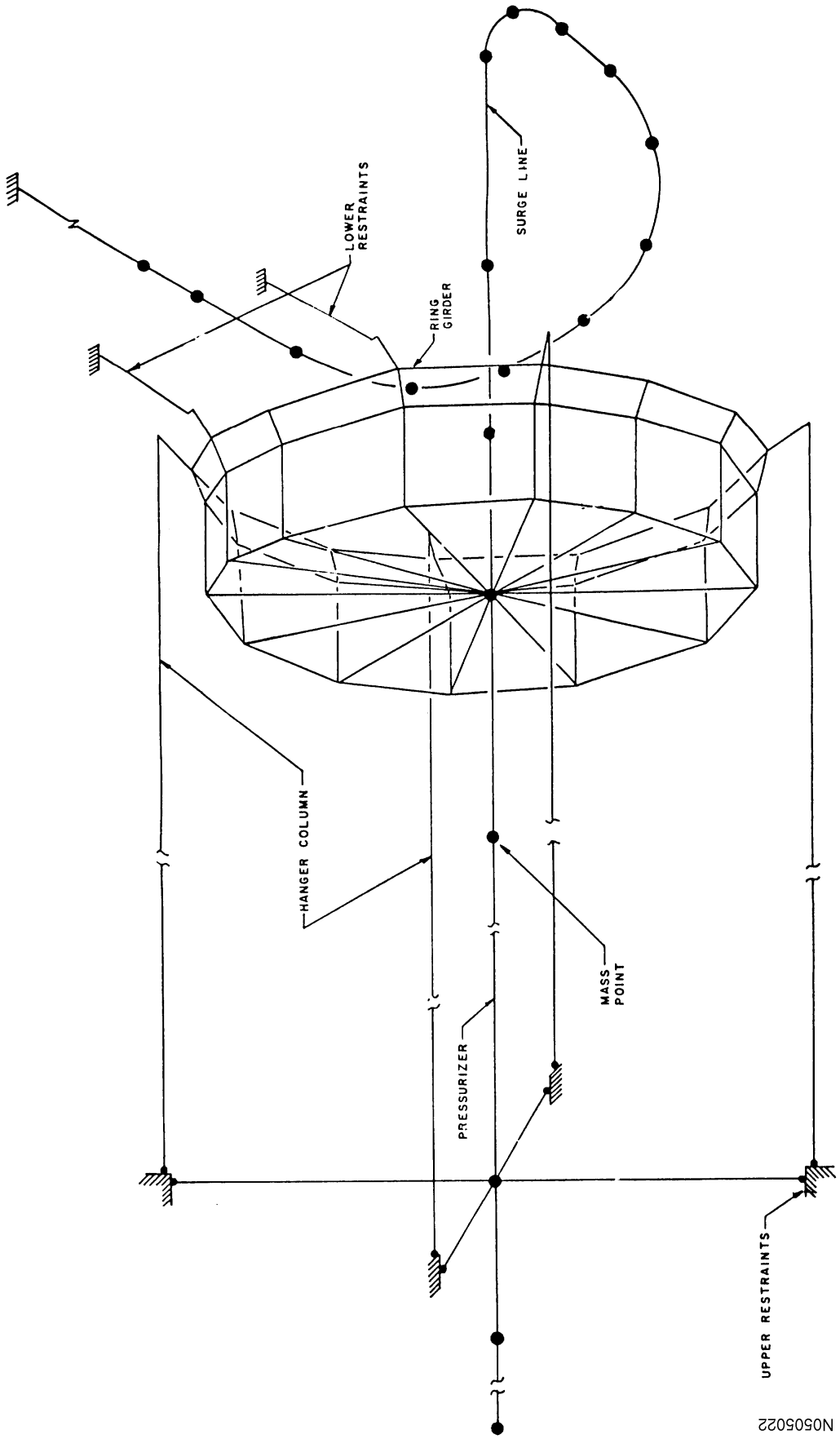

Figure 5.5-14
DYNAMIC MODEL FOR PRESSURIZER SUPPORTS

Figure 5.5-15
DYNAMIC MODEL FOR REACTOR VESSEL SUPPORTS

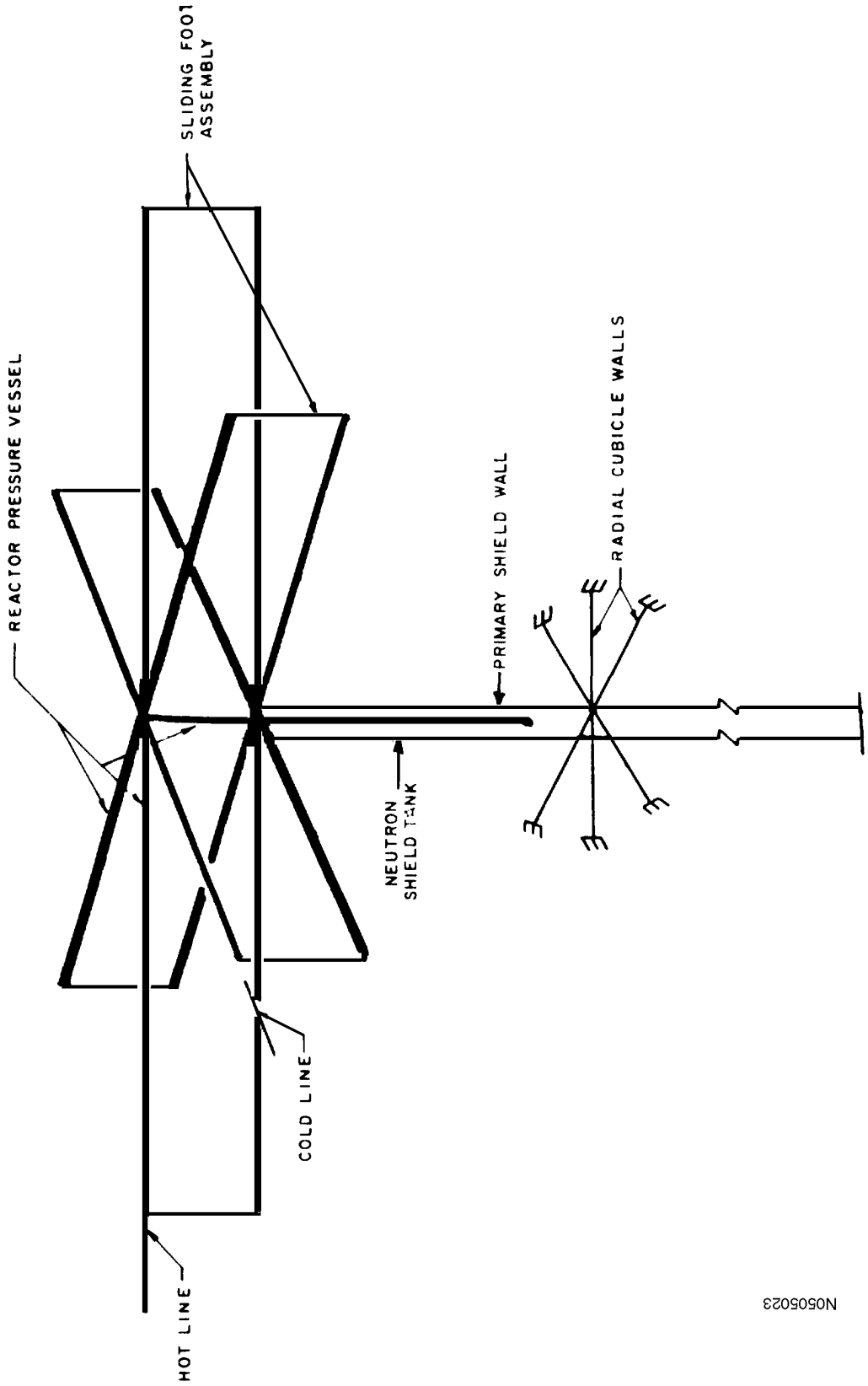

Figure 5.5-16
TEMPERATURE DISTRIBUTION IN SNUBBER ASSEMBLY
BETWEEN STEAM GENERATOR SUPPORT AND REACTOR COOLANT
PUMP SUPPORT—CASE 1, 105°F AMBIENT

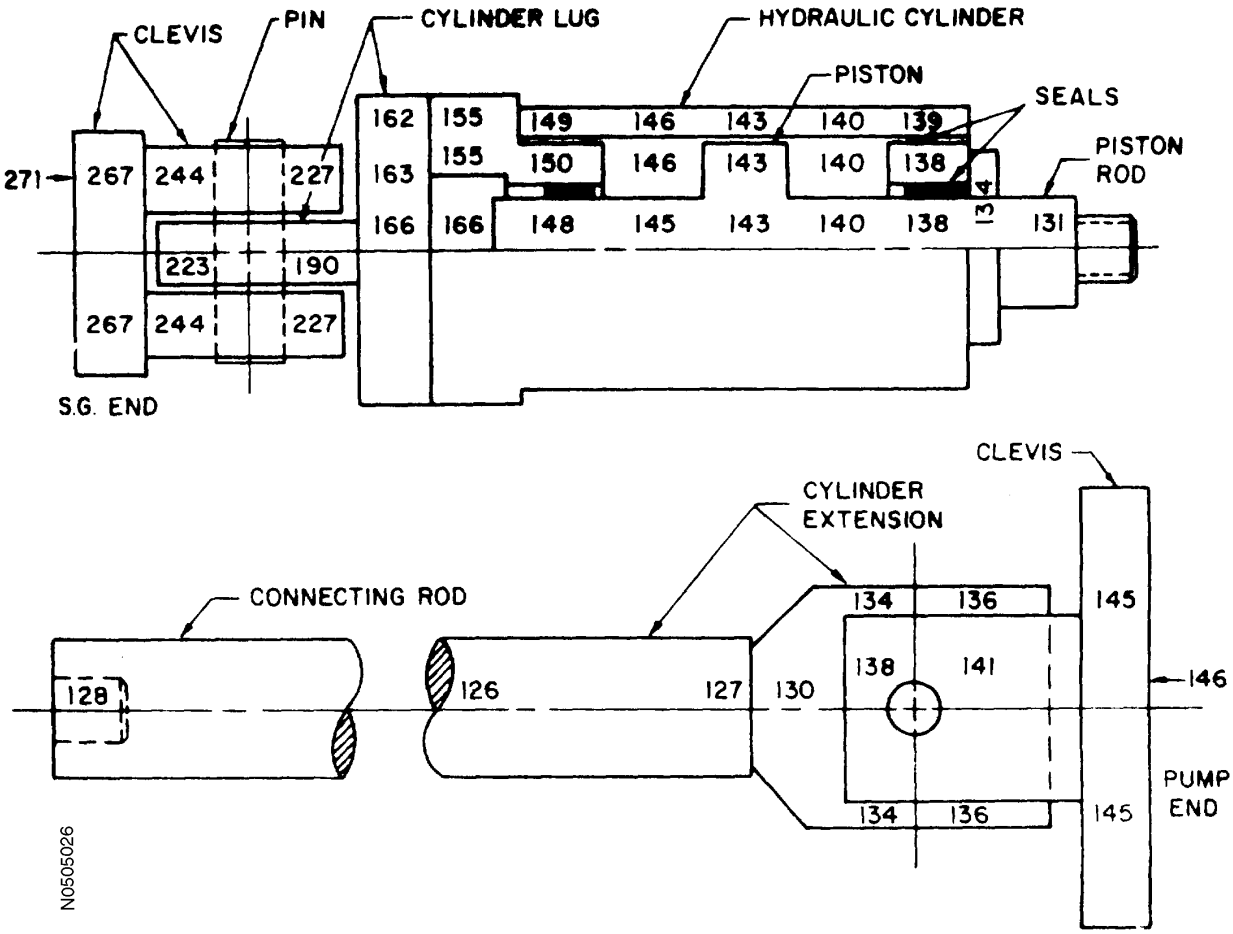

Note: Internal design details of the installed snubbers may differ slightly from the details shown above.

Figure 5.5-17
TEMPERATURE DISTRIBUTION IN SNUBBER ASSEMBLY
BETWEEN STEAM GENERATOR SUPPORT AND REACTOR COOLANT
PUMP SUPPORT—CASE 1, 70°F AMBIENT

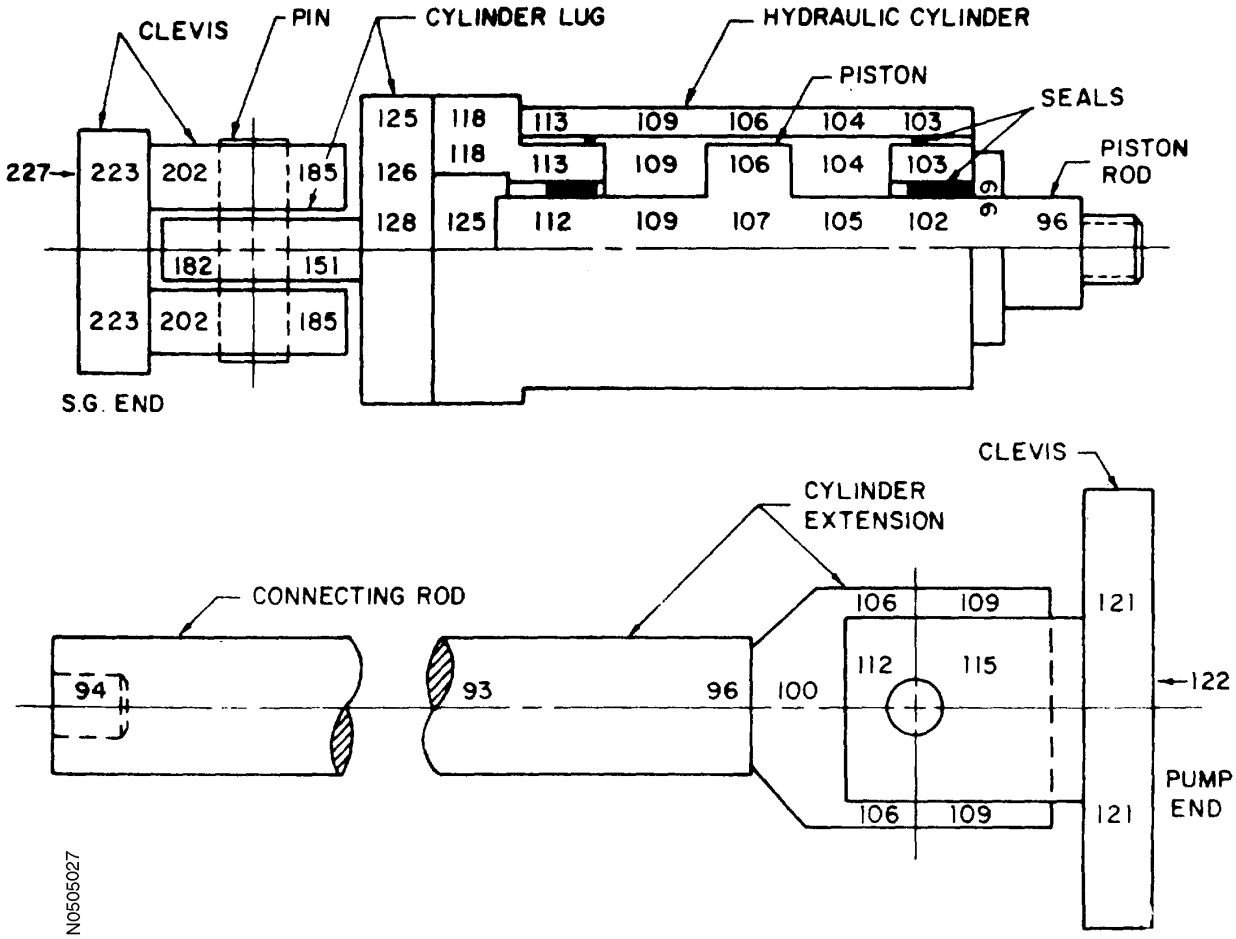

Note: Internal design details of the installed snubbers may differ slightly from the details shown above.

Figure 5.5-18
TEMPERATURE DISTRIBUTION IN SNUBBER ASSEMBLY
BETWEEN STEAM GENERATOR SUPPORT AND CONCRETE WALLS—CASE 2, 105°F AMBIENT

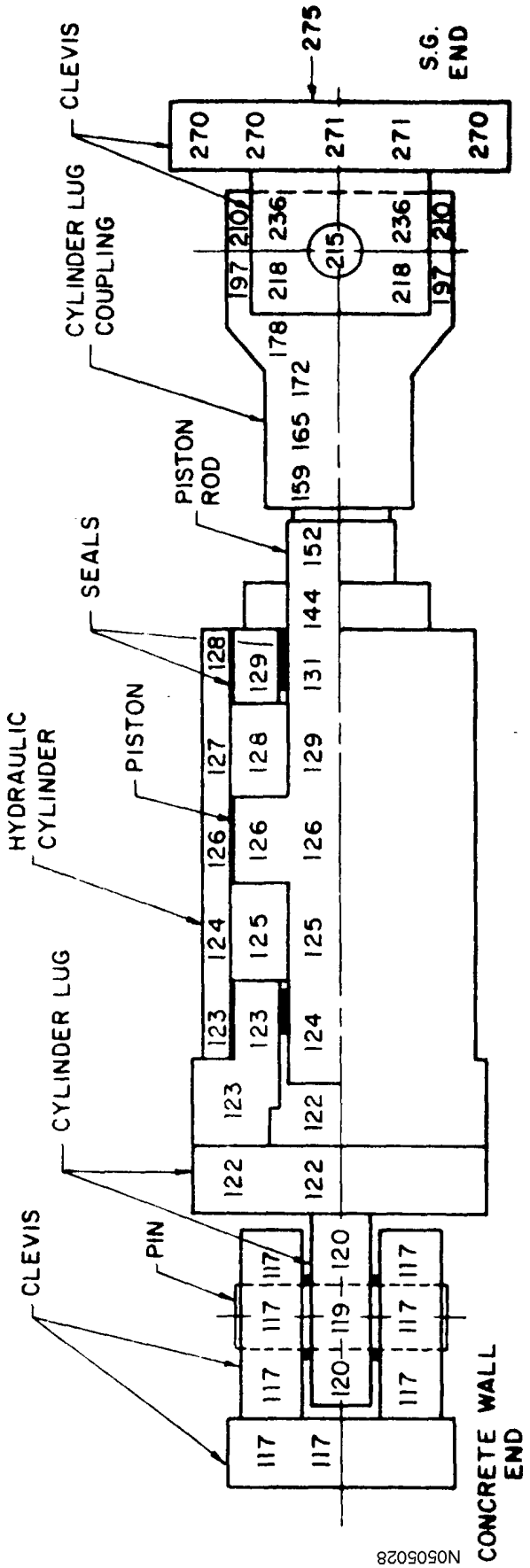

Note: Internal design details of the installed snubbers may differ slightly from the details shown above.

Intentionally Blank

5.6 INSTRUMENTATION APPLICATION

5.6.1 Design Bases

Process control instrumentation is provided to acquire data on the pressurizer and on a per-loop basis for the key process parameters of the reactor coolant system (Figure 5.6-1) (including the reactor coolant pump motors), as well as for the residual heat removal system. The pick-off points for the reactor coolant system are shown in Reference Drawings 1 and 2, and for the residual heat removal system in Reference Drawing 3. In addition to providing input signals for the protection system and the plant control systems, the instrumentation sensors furnish input signals for monitoring and/or alarming purposes for the following parameters:

1. Temperatures.
2. Flows.
3. Pressures.
4. Water levels.

In general, these input signals are used for the following purposes:

1. Provide input to the reactor trip system for reactor trips as follows:
   a. Overtemperature delta T.
   b. Overpower delta T.
   c. Low pressurizer pressure.
   d. High pressurizer pressure.
   e. High pressurizer water level.
   f. Low primary coolant flow.
2. Provide input to the engineered safety features actuation system as follows:
   a. Pressurizer low-low pressure.
   b. High differential pressure between any steam line and the other steam lines.
   c. High steam flow coincident with low-low T_{avg} or low steam-line pressure.
3. Furnish input signals to the non-safety-related systems, such as the plant control systems and surveillance circuits so that:
   a. Reactor coolant average temperature (T_{avg}) will be maintained within prescribed limits. The resistance temperature detector instrumentation is identified in Reference Drawing 1.

b. Pressurizer level control, using T_{avg} control, will maintain the coolant level within prescribed limits.

c. Pressurizer pressure will be controlled within specified limits.

d. Steam dump control, using T_{avg} control, will accommodate excess power generation.

e. Information is furnished to the control room operator and at local stations for monitoring.

Instrumentation necessary to monitor the reactor vessel level and to detect conditions of inadequate core cooling is provided by the reactor vessel level indication system which is described in Section 7.9.2.2.

The following is a functional description of the process control instrumentation of the system. Unless otherwise stated, all indicators, recorders, and alarm annunciators are located in the main control room.

5.6.2 Description

5.6.2.1 Temperature Measuring Instrumentation

1. Resistance Temperature Detectors (Narrow Range)

   Three thermowell mounted resistance temperature detectors, for the reactor protection and control, are installed in the hot leg scoops of each loop near the inlet to the steam generator. The scoops are 120 degrees apart in the cross-sectional plane of the reactor coolant leg, and extend into the pipe to sample the flow.

   One thermowell mounted resistance temperature detector, for reactor protection and control, is installed in the cold leg nozzle of each loop at the discharge of the reactor coolant pump.

   Signals from these instruments are used to compute the reactor coolant delta T (temperature of the hot leg, T_{hot}, minus the temperature of the cold leg, T_{cold}) and an average reactor coolant temperature (T_{avg}). The T_{avg} and ΔT for each loop is indicated on the main control board.

2. Cold-Leg and Hot-Leg Temperatures (Wide Range)

   Temperature detectors, located in the thermometer wells in the cold and hot-leg piping of each loop, supply signals to wide-range temperature recorders. This information is used by the operator to control coolant temperature during start-up and shutdown.

   As a result of IE Bulletin 79-27, *Loss of Non-Class 1E Instrumentation and Control Power System Bus during Operation,* the original design basis for supplying power to the wide-range cold-leg and hot-leg temperature loops was modified. In the original design, all cold-leg temperature loops were supplied by one vital bus and all hot-leg temperature loops by the other. In the present design, the vital buses are realigned so that the associated hot-leg temperature loop and cold-leg temperature loop of the same loop are supplied by the same

vital bus which is different than that aligned for one of the other two loops. The modification allows the operator to verify natural circulation by the use of the differential temperature between T_{hot} and T_{cold} on at least two reactor coolant loops in the event of loss of the reactor coolant pumps and one vital bus. Two hot-leg temperature indications are available at the auxiliary monitoring panel. One of them is installed with a specific separation from the additional temperature indication available in the control room. This separation meets 10 CFR 50 Appendix R Section III.G.2.

3. Pressurizer Temperature

   There are three temperature detectors in the pressurizer, one in the steam phase and two in the water phase. All detectors supply signals to temperature indicators and high-temperature alarms. The steam-phase detector, located near the top of the vessel, is used during start-up to determine water temperature when the pressurizer is completely filled with water. The water-phase detectors, located at an elevation near the center of the heaters, are used during cooldown when the steam-phase detector response is slow because of poor heat transfer.

4. Surge Line Temperature

   This detector supplies a signal for a temperature indicator and a low-temperature alarm. Low temperature is an indication that the continuous spray rate is too small.

5. Safety and Relief Valve Discharge Temperatures

   Temperatures in the pressurizer safety and relief valve discharge lines are measured and indicated. An increase in a discharge line is an indication of leakage through the associated valve.

6. Spray Line Temperatures

   Temperatures in the spray lines from two loops are measured and indicated. Alarms from these signals are actuated by low spray water temperature. Alarm conditions indicate insufficient flow in the spray lines.

7. Pressurizer Relief Tank Water Temperature

   The temperature of the water in the pressurizer relief tank is indicated and an alarm actuated by high temperature informs the operator that cooling of the tank contents is required.

8. Reactor Vessel Flange Leakoff Temperature

   The temperature in the leakoff line from the reactor vessel flange o-ring seal leakage monitor connections is indicated. An increase in temperature above ambient is an indication of o-ring seal leakage. High temperature actuates an alarm.

9. Reactor Coolant Pump Motor Temperature Instrumentation

   a. Upper and Lower Thrust Bearing Shoes Temperature

      Resistance temperature detectors are located in the shoes of upper and lower thrust bearings. These elements provide a signal high-temperature alarm and recorder input.

   b. Stator Winding Temperature

      The stator windings contain six resistance-type detectors, two, per phase, imbedded in the windings. A signal from one of these detectors actuates a high-temperature alarm and recorder input.

   c. Upper and Lower Bearing Temperature

      Resistance temperature detectors are located in the upper and lower radial bearings. Signals from these detectors actuate a high-temperature alarm and recorder input.

5.6.2.2 **Flow Indication**

Reactor Coolant Loop Flow Rates

Flow in each reactor coolant loop is monitored by three differential-pressure measurements at a piping elbow tap in each reactor coolant loop. These measurements on a two-out-of-three coincidence circuit provide a low-flow signal to actuate a reactor trip above specified power levels.

5.6.2.3 **Pressure Indication**

1. Pressurizer Pressure

   The pressurizer is equipped with multiple transmitters used to sense reactor coolant pressure. Three transmitters provide inputs to the protection circuits. Two additional transmitters are used in the control of reactor pressure.

   The protection related pressure transmitters provide signals for individual indicators in the control room and to the reactor protection system for actuation of both the low pressure and high pressure trip. In addition, these transmitters provide an input to the low pressure safety injection actuation logic circuits, and provide the input for P-11, that allows the manual block of the safety injection actuation signals and blocks automatic operation of the power operated relief valves. More detail on these functions is provided in Sections 7.2 and 7.3.

   One of the control transmitters is used in conjunction with a reference pressure to develop a demand signal for controllers providing for pressurizer proportional heater control, pressurizer backup heater control, spray valve control, and control of one of two PORVs. This transmitter also provides control room indication, alarms, and an input to a strip chart recorder. An additional output from this transmitter is provided at the auxiliary monitoring

panel and is installed with a specific separation from the pressurizer pressure indication available in the control room. This separation meets 10 CFR 50 Appendix R Section III.G.2.

The other control transmitter provides input to the second PORV and provides control room indication, alarms, and input to a strip chart recorder. More detail on the pressure control function is found in Section 7.7.1.5.

2. Reactor Coolant Reference Pressure (Deadweight Test)

   A differential-pressure transmitter provides a signal for the indication of the difference between the pressurizer pressure and a pressure generated by a deadweight tester located outside the reactor containment. The indication is used for online calibration checks of the pressurizer pressure signals.

3. Reactor Coolant Loop Pressures

   Three wide-range pressure transmitters are located on two of the hot legs. Two of these wide-range transmitters provide pressure indication over the full operating range and serve as a guide to the operator for manual pressurizer heater and spray control and letdown to the chemical and volume control system during plant start-up and shutdown. The third wide-range pressure transmitter and one of the above mentioned transmitters are used during the low temperature solid water phase of reactor coolant system pressurization to automatically actuate the pressurizer PORV if undesirable temperature and pressure conditions develop.

   The two wide-range channels provide the permissive signals for the residual heat removal loop suction line isolation valve interlock circuit.

   There are also two local pressure indicators for operator reference during the shutdown condition, which are located in two of the hot loops.

4. Pressurizer Relief Tank Pressure

   The pressurizer relief tank pressure transmitter provides a signal for indication and high pressure alarm.

5. Reactor Coolant Pump Motor Oil Pressure

   a. Oil Lift Switch

      A dual-purpose switch is provided on the high-pressure oil lift system. The switch is part of an interlock system that will prevent the starting of the reactor coolant pump until the oil lift pump is started manually and the oil pressure is adequate to permit starting the RCP. In addition, the switch provides indication on the main control board that the lift oil pressure has reached sufficient pressure to allow starting of the reactor coolant pump. The oil lift pump is stopped manually after the reactor coolant pump is operating. A local pressure gauge is also provided.

b. Lower Oil Reservoir Liquid Level

A level switch is provided in the motor lower radial bearing oil reservoir. The switch will actuate a high and low-level alarm on the main control board.

Note: The lower bearing oil high level alarms to the Main Control Room have been disconnected.

c. Upper Oil Reservoir Liquid Level

A level switch is provided in the motor upper radial bearing and thrust bearing oil reservoir. The switch will actuate a high- or low-level alarm on the main control board.

5.6.2.4 Liquid Level Indication

1. Pressurizer Level

Three pressurizer liquid level transmitters provide signals for use in the reactor control and protection system, the emergency core cooling system, and the chemical and volume control system. Each transmitter provides an independent high-water-level signal that is used to actuate an alarm and a reactor trip. The transmitters also provide independent low-water-level signals that will activate an alarm. Each transmitter also provides a signal for a level indicator located on the main control board.

In addition to the above, signals may be selected for specific functions as follows:

a. Any one of the three level transmitters may be selected by the operator for display on a level recorder located on the main control board. This same recorder is used to display a pressurizer reference liquid level.

b. Two of the three transmitters perform the following function (a) selector switch allows the third transmitter to replace either of these two:

   1) One transmitter provides a signal that will actuate an alarm when the liquid level falls to a fixed level setpoint. The same signal will trip the pressurizer heaters “off” and close the letdown line isolation valves.

   2) One transmitter supplies a signal to the liquid level controller for charging flow control and also initiation of a low-flow (high demand) alarm. This signal is also compared to the reference level and actuates a high-level alarm and turns on all pressurizer backup heaters if the actual level exceeds the reference level. If the actual level is lower than the reference level, a low alarm is actuated.

A signal is also transmitted to the auxiliary monitoring panel and a pressurizer water level indication is installed with a specific separation from the indicator available in the control room. This separation meets 10 CFR 50 Appendix R Section III.G.2.

A fourth independent pressurizer level transmitter, calibrated for low temperature conditions, provides water level indication during start-up, shutdown, and refueling operations.

2. Pressurizer Relief Tank Level

   The pressurizer relief tank level transmitter supplies a signal for an indicator and high and low-level alarms.

5.6.3 Evaluation

The reactor coolant system design and operating pressure, together with the safety, power relief and pressurizer spray valve setpoints, and the protection system setpoint pressures, are listed in Table 5.5-12. The design pressure allows for operating transient pressure changes. The selected design margin considers core thermal lag, coolant transport times and pressure drops, instrumentation and control response characteristics, and system relief valve characteristics.

Process control instrumentation for the residual heat removal system is provided for the following purposes:

1. Furnish input signals for monitoring and/or alarming purposes for:
   a. Temperature indications.
   b. Pressure indications.
   c. Flow indications.
2. Furnish input signals for control purposes of such processes as:
   a. Residual heat removal inlet valves control circuitry. See Section 7.6.2 for the description of the interlocks and requirements for automatic closure.
   b. Control valve in the residual heat removal heat exchanger bypass\ line to control temperature of reactor coolant returning to reactor coolant loops during plant cooldown.

5.6 REFERENCE DRAWINGS

The list of Station Drawings below is provided for information only. The referenced drawings are not part of the UFSAR. This is not intended to be a complete listing of all Station Drawings referenced from this section of the UFSAR. The contents of Station Drawings are controlled by station procedure.

	Drawing Number	Description
1.	11715-FM-093A	Flow/Valve Operating Numbers Diagram: Reactor Coolant System; Loops 1, 2, & 3; Unit 1
	12050-FM-093A	Flow/Valve Operating Numbers Diagram: Reactor Coolant System; Loops 1, 2, & 3; Unit 2
2.	11715-FM-093B	Flow/Valve Operating Numbers Diagram: Reactor Coolant System, Unit 1
	12050-FM-093B	Flow/Valve Operating Numbers Diagram: Reactor Coolant System, Unit 2
3.	11715-FM-094A	Flow/Valve Operating Numbers Diagram: Residual Heat Removal System, Unit 1
	12050-FM-094A	Flow/Valve Operating Numbers Diagram: Residual Heat Removal System, Unit 2

Figure 5.6-1
REACTOR COOLANT SYSTEM PROCESS CONTROL INSTRUMENTATION

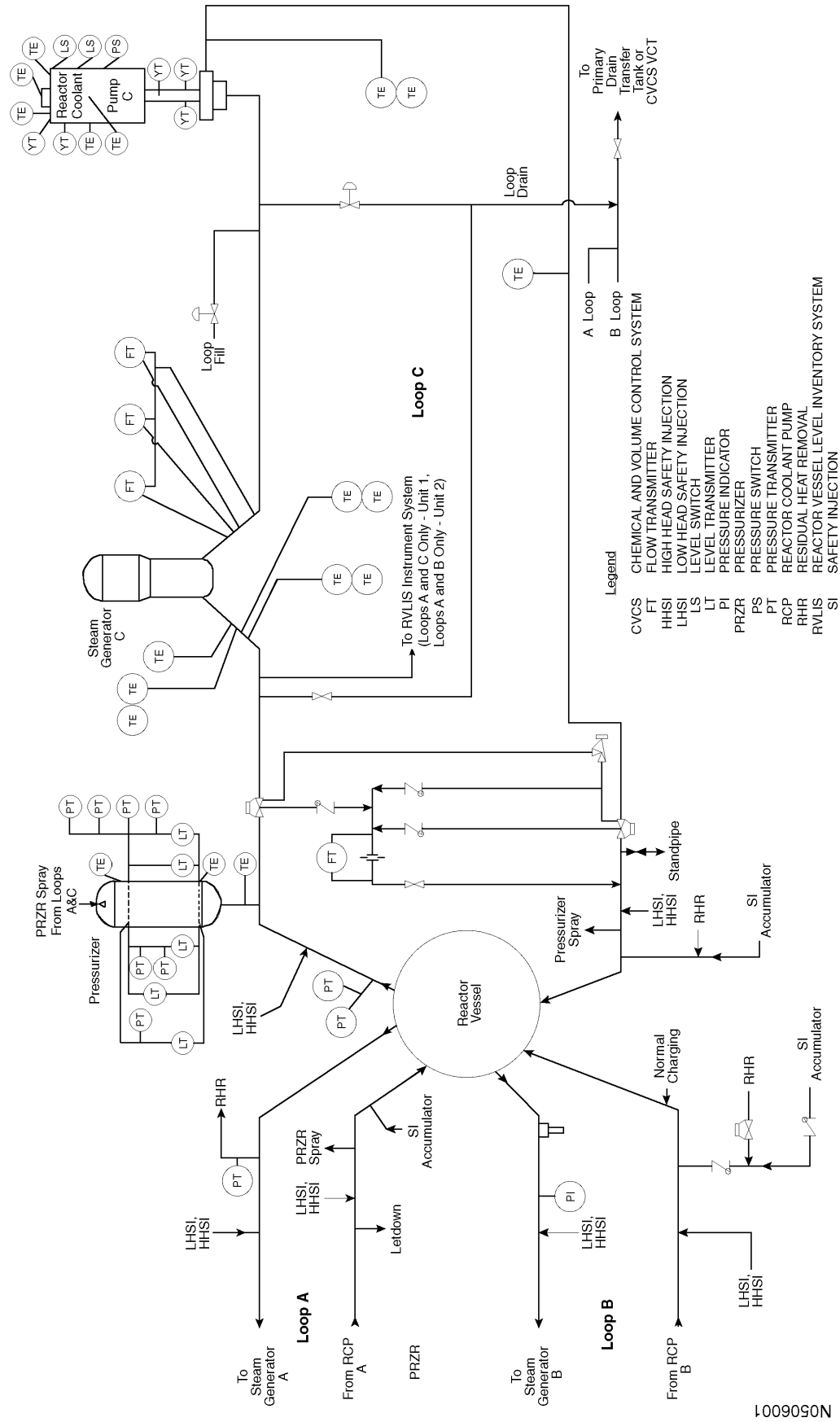

Intentionally Blank

Appendix 5A

Discussion Between the Nuclear Regulatory Commission and Virginia Electric & Power Company on Steam Generator Lower and Reactor Coolant Pump Supports for North Anna Units No. 1 and 2

Intentionally Blank

CR8089
EAK:mp
"R

DISCUSSION BETWEEN THE NUCLEAR REGULATORY COMMISSION

AND

VIRGINIA ELECTRIC & POWER COMPANY

ON

STEAM GENERATOR LOWER AND REACTOR

COOLANT PUMP SUPPORTS FOR

NORTH ANNA UNITS NO. 1 AND 2

Room P-118
Philips Building
7920 Norfolk Avenue
Bethesda, Maryland

Tuesday, 13 April 1976

The meeting between the Nuclear Regulatory Commission and Virginia Electric & Power Company convened at 8:30 a.m.

CORRECTED COPY OF TRANSCRIPT OF APRIL 13, 1976,
DISCUSSION BETWEEN NRC AND VEPCO - STEAM GENERATOR LOWER
AND REACTOR COOLANT PUMP SUPPORTS.
MAY 18, 1976

mp

C O N T E N T S

AGENDA	PAGE
Introduction by Senior Vice President-Power - Mr. W. L. Proffitt - Vepco	6
Description and design bases for steam generator and reactor coolant pump supports -	
Al Van Sickel - Stone & Webster	9
Norman Goldstein - Stone & Webster	16
Repair of supports and consideration given to prevention of lamellar tears and restraint cracks - Jon R. Cavallo - Stone & Webster	24
Results of quality assurance program for repairs and acceptance of welds, reference restraint cracks and lamellar tears - Jim Perkins - Vepco	33
Evaluation of the significance of the Sun Ship core sampling programs - J. M. McAvoy - Vepco	48
Effects of defects on the capability of the supports to withstand design bases loads reference lamellar tears, restraint cracks, and brittle fracture -	
R. D. Stout	55
H. T. Corten	60
Summary Statement - Sam C. Brown, Jr. - Vepco	77
Question and answer period for NRC Staff	79

1 P R O C E E D I N G S

2 MR. FERGUSON: First of all, I would like to welcome
3 you all back to Washington. We are here because we need to
4 discuss the steam generator supports on the North Anna plant
5 units 1 and 2.
6 Some time ago, March 12, we received a letter from
7 Sun Ship which indicated they had some information about the
8 steam generator supports which they wanted to discuss with us.
9 At that time, we set up two meetings, one with Sun Ship and
10 one with VEPCO, to hear each side of the story.
11 We met with Sun Ship on March 26 and tentatively
12 set this meeting for April 2. When we got into the details
13 of setting up this meeting, we found we had schedule conflicts
14 on both sides, and this is the first day which has been mutually
15 acceptable.
16 We had invited all parties to the OL proceeding for
17 North Anna 1 and 2 to this meeting. I understand some members
18 of the press have also indicated a desire to attend, and I am
19 not sure who is all here. So I would like if each group would
20 at least identify themselves so that we do know who all is
21 around the room.
22 We understand VEPCO is here and, Ashby, you will be
23 their spokesman.
24 I am Bob Ferguson, with the NRC.
25 MR. HEPP: I am Peter Hepp with the Sun Ship, and

1 these gentlemen are with me.

2 DR. MC CORMICK: Dr. Fred McCormick.

3 VOICE: Westinghouse.

4 MR. FERGUSON: Anybody else?

5 The rest are all NRC people, I assume.

6 I will pass around a list of attendees, which I would

7 like everybody to sign and indicate their company affiliation.

8 Also, for this meeting VEPCO has provided a court

9 reporter, who will present a transcript. But I am not sure

10 what is going to happen to the transcript.

11 MR. SWANSON: Dan Swanson, licensing attorney with

12 NRC.

13 We agreed with VEPCO representatives that a court

14 reporter could make a transcript of this proceeding, that each

15 party has an opportunity to make corrections to the transcript

16 before it is considered official. With that proviso and, I

17 hope, with the agreement of all the parties, the NRC has per-

18 mitted this meeting to be transcribed.

19 MR. RUNZER: Who do you mean by "parties"?

20 I am John Runzer, counsel for Sun Ship Building and

21 Dry Dock.

22 MR. SWANSON: That includes Sun Ship Building's

23 opportunity, if there is no objection from VEPCO.

24 MR. MAUPIN: I have no objection.

al Reporters, Inc.

25 MR. FERGUSON: We are passing out an agenda which

1 VEPCO has prepared for this meeting.

2 One other ground rule we had tentatively set here
3 was to remind everybody that this is primarily a meeting between
4 the NRC and VEPCO, and that questions to VEPCO will be directed
5 by the staff. If there are any other questions that other
6 people would like to direct to the staff, they will have
7 opportunity to do so after we have our discussion with VEPCO.

8 And the way we plan to proceed is, run through
9 the agenda, which I understand will take an hour and a half or
10 two hours, and then take a 20-minute break and open it up for
11 staff questions.

12 Mr. Baum.

13 MR. BAUM: We have really seven presentations that
14 will be made this morning, and the presentations will be as
15 they are listed on the agenda.

16 I assume everybody has a copy of the agenda. If
17 not, we will pass them around to the back.

18 We will have those presentations typed up, and they
19 will be bound into the transcript. They will be an integral
20 part of that.

21 Now, the other thing is, we would like to request
22 that if you have questions of the individual speakers, hold the
23 questions until we have completed our entire presentation.
24 Most of the answers will be provided by the time we get through
25 with the last presentation.

1 I will introduce Mr. W. L. Proffitt, senior vice
2 president of power.
3 Bill?
4 MR. PROFFITT: I am W. L. Proffitt. I am senior
5 vice president of the Virginia Electric and Power Company.
6 The purpose of our presentation today is to provide
7 responses to questions raised by the NRC staff as a result of
8 certain allegations made by Sun Ship Building and Dry Dock
9 Company, the fabricator of the steam generator and reactor
10 coolant pump supports for the North Anna units 1 and 2.
11 VOICE: Can the gentleman speaking use the microphone?
12 MR. PROFFITT: Was there any problem with where I
13 had gone so far? Could you hear?
14 VOICE: Is the mike on? I still can't hear you.
15 MR. PROFFITT: I will start over, and that may make
16 the record more clear.
17 I am W. L. Proffitt, and I am senior vice president
18 for the Virginia Electric and Power Company.
19 The purpose of our presentation today is to provide
20 responses to questions raised by the NRC staff as a result of
21 certain allegations made by the Sun Ship Building and Dry
22 Dock Company, fabricator of the steam generator and reactor
23 coolant pump supports for the North Anna units 1 and 2.
24 We believe that Sun Ship has taken this action in
25 the hope of improving their legal position in a multi-million

1 dollar lawsuit brought against them by our company because of
2 faulty workmanship associated with the fabrication of the supports
3 We are greatly concerned that the NRC regulatory process is
4 being used for this purpose.
5 In order that you may better assess the technical
6 presentations to follow my remarks, you should understand the
7 background associated with some of the key decisions made by
8 our company.
9 When the quality assurance personnel at the North
10 Anna site detected surface cracks in some of the welds of
11 the supports following their receipt at North Anna, it did
12 not at first appear to be an unusual problem. A program of
13 selective repair was undertaken, which consisted of grinding
14 out the cracks and repairing them by approved weld procedures.
15 As the program continued, we found the workmanship
16 to be of such a gross nature that the selective repair program
17 could not provide the assurance that all weld defects could
18 be identified within a reasonable time frame. We considered
19 the feasibility of an alternative design. We also considered
20 scrapping the supports and starting over with the same design,
21 using A-36 material. We also considered removing all of the
22 welds and replacement of welds with the desired integrity.
23 Because of the physical restraints in the contain-
24 ment and long lead-time delivery of material, coupled with the
25 fact that either of the above alternatives would produce a

structure that was safe, the decision to remove all welds was made on the basis of what we believe to be the least impact on our construction schedule.

The cost implication of this decision was substantial, but it was, in our opinion, the only way of providing welds of proper integrity.

Since the problem was first identified, the NRC staff and Region 2 compliance personnel have been kept fully informed, both as to the specific actions taken and the detailed manner in which the repair program has been conducted. We believe the record of such involvement will speak for itself.

With the onset of litigation, we found ourselves playing the dual role of litigant and applicant. To assure there was no conflict between these roles, I personally met with our legal counsel and technical experts retained by counsel and explained that if, in the course of their preparation for the litigation, they should identify any matter that could be classed as a safety concern, our company had a responsibility to make such information known to the NRC, without regard to its effect on our legal position or on the licensing process.

We believe our documented actions demonstrated that dedication to this concept.

I will ask Mr. Al Van Sickel, with Stone and Webster, to discuss the design of the supports.

MR. VAN SICKEL: Good morning.

(Slide.)

I would like to start the technical discussion with this first slide which shows a general arrangement of a three-loop Westinghouse nuclear power plant, the reactor vessel being in the center of the containment and each loop consisting of a steam generator and reactor coolant pump with its corresponding supports.

(Slide.)

The second slide illustrates somewhat better the support structures we are discussing today. The steam generator has an upper support ring and lower support frame. The reactor coolant pump sits on a support frame which is mounted on 3 columns. The reactor vessel is off to the right of this slide.

There are hydraulic snubbers between the pump frame and primary shield wall and between the steam generator lower support frame and the primary shield wall, The function of the snubbers is to permit free thermal expansion of the hot and cold legs away from the reactor vessel. This is permitted by Lubrite plates under each corner column of the steam generator lower support.

(Slide.)

This slide illustrates in somewhat more detail the construction of the supports that we have here today. As you can see, these are made out of a welded frame structure

1 using commercially available wide-flange structural shapes. You
2 can't see it very well in this slide but at approximately this
3 region in here, is where each support foot on the steam generator
4 is retained. As most of you know, the steam generators for
5 Westinghouse have feet supports rather than a skirt supported
6 vessel.
7 In order to keep this meeting somewhat within reason-
8 able bounds of time, we are going to put most of our attention
9 today on the lower support frame for the steam generator.
10 (Slide.)
11 A design goal for the support frame was to try to
12 equalize the loads on the 4 feet of the steam generator as much
13 as possible. It required the design of a fairly rigid frame.
14 At the time of the design for these supports, there was no
15 industry code that had jurisdiction. And the codes or the
16 design philosophy that was imposed was pretty much left up
17 to each architect engineer.
18 Stone and Webster at that time was one of the more
19 conservative of the architect engineers. They combined dead
20 weight, design basis earthquake plus the pipe rupture load as
21 the most severe condition of design and designed the structures
22 to 9/10ths of yield.
23 (Slide.)
24 The material we chose was A-36 steel. We permitted
25

1 some substitution of A-572. We chose the material because it
2 had had wide industry use, not only in the nuclear industry but
3 other industries as well, and it had met the
4 criteria we established and it was available commercially in
5 the sizes we required.
6 (Slide.)
7 To put our original design criteria somewhat into
8 today's context, I would like to bring your attention to similar
9 criteria which currently exist in ASME, Section III, sub-
10 section NF, which is the industry code that currently has
11 jurisdiction for nuclear component supports.
12 As you can see, the load combinations have been
13 expanded to consider more stress combinations. However, the
14 controlling one for the structures is dead weight plus earth-
15 quake plus pipe rupture. We see that the allowables have been
16 raised from our original criteria. They are 1.2 yield or 7/10ths
17 of ultimate which equates for A-36; to 40.6 ksi.
18 As you saw earlier, this was 32.4 ksi and the original
19 design criteria of the supports. There is one new criteria which
20 is a through thickness direction stress where the allowables are
21 reduced to 50 percent of the longitudinal allowables.
22 MR. SHAO: Do you have any piping loads?
23 MR. VAN SICKEL: These are superimposed loads for
24 normal and emergency conditions which are piping loads. In the
25 case of the faulted condition this is a pipe rupture load and

1 these loads become meaningless. In the case of the original
2 design for the faulted condition the only piping loads that
3 were considered were reaction loads that reacted to a pipe
4 rupture event.
(Slide.)
5 We will talk more about the material that was used.
6 Most of the support frame was A-36. There were a few members
7 where we permitted substitution. We required certified mill
8 test reports. The minimum requirements were more than met. The
9 reduction of areas was good, 45 to 60 and 58 to 52, and elonga-
10 tions over 20 percent. We imposed one additional requirement on
11 raw material. With both plates and shapes greater than 3 inches
12 in thickness, we required UT of the raw material.
13 (Slide.)
14 If we look at today's industry code it still
15 permits A-36, A-572. It has one additional requirement which
16 is an optional requirement, up to the choice of the designer.
17 If he imposes impact requirements, the material must meet 25
18 mils of the lateral expansion.
19 (Slide.)
20 Although it's not, and was not, a requirement for the
21 North Anna 1 and 2 support structures, we have made some impact
22 tests that represent 4 heats out of the North Anna 1 and 2
23 supports. This represents 54 different test samples. If we
24
25

1 look at mils lateral expansion as a function of temperature
2 we see the curve represented by the sampling tests we had was
3 good. We are talking about temperature in the cubicle, mini-
4 mum of 80 degrees. The temperatures of the supports are probably
5 somewhere between 80 and 120 degrees and for the most part
6 around the steam generator feet, are in the upper end of this
7 range. The mils lateral expansion for the operating temperatures
8 we are talking about is above the current code requirements.
9 (Slide.)
10 The purpose of this slide is to indicate that we did
11 consider impact properties of the high strength steels we had
12 in the structures.
13 We have some forgings for hardware such as the snubber
14 trains and pump columns. We had imposed impact properties as
15 you can see.
16 (Slide.)
17 If you look for a minute at the current, ASME III NF
18 requirement on similar forgings, you find again it is related to
19 mils lateral expansion. They don't require UT or MT. It's
20 optional in the current code, up the designer. They didn't specify
21 acceptance standards. That's negotiated with the suppliers.
22 (Slide.)
23 This slide shows some of the fabrication requirements we
24 imposed on the design of these supports. For machined surfaces we
25 required MT or PT, in accordance with the ASME code after machining.

1 The current industry code does not require this. Welding pro-
2 cedures and welding operators we required the qualification to
3 ASME IX. Current code is very similar and at the option of the
4 designer. If he states in his design specification that impact
5 must be considered, this requires additional requirements and
6 testing of weld metal. Post-welding heat treatment, UCS-56 of
7 ASME VIII. Current code, basically the same.
8 (Slide.)
9 Non-destructive examination used in the design of these
10 supports required spot radiography on selected areas.
11 You may recall the earlier slides showed the welded
12 support frame. We picked a few joints that were good for
13 radiography and required radiography. We required magnetic
14 particle inspection on all of the welds not radiographed, root
15 pass, 25 percent, 50 percent, 75 percent and final pass.
16 The current code requires MT on welds that are not radiographed
17 on ultrasoniced but only on the final pass.
18 Visual, we did not require formal visual inspection.
19 Current code does require no cracks or linear indications from
20 visual inspection.
21 In the current code they have different NDE requirements
22 for secondary members. Secondary members are bracing type
23 members in which the stresses are equal to or less than 50
24 percent allowable.
25

I might point out that many of the members in our support frame would fall into this category. In the current code, no inspection is required of the welds at all on these members, except visual. We did not take account of this. We did all of this inspection and more on the North Anna 1 and 2 supports.

Now, to explain to you the extent and some of the results of the analysis on these supports, I will introduce Norman Goldstein, Section Head, Mechanical Section. Stone and Webster Engineering.

(The slides follow.)

end of 2

GENERAL ARRANGEMENT OF PRIMARY LOOP EQUIPMENT THREE-LOOP LAYOUT PLAN VIEW

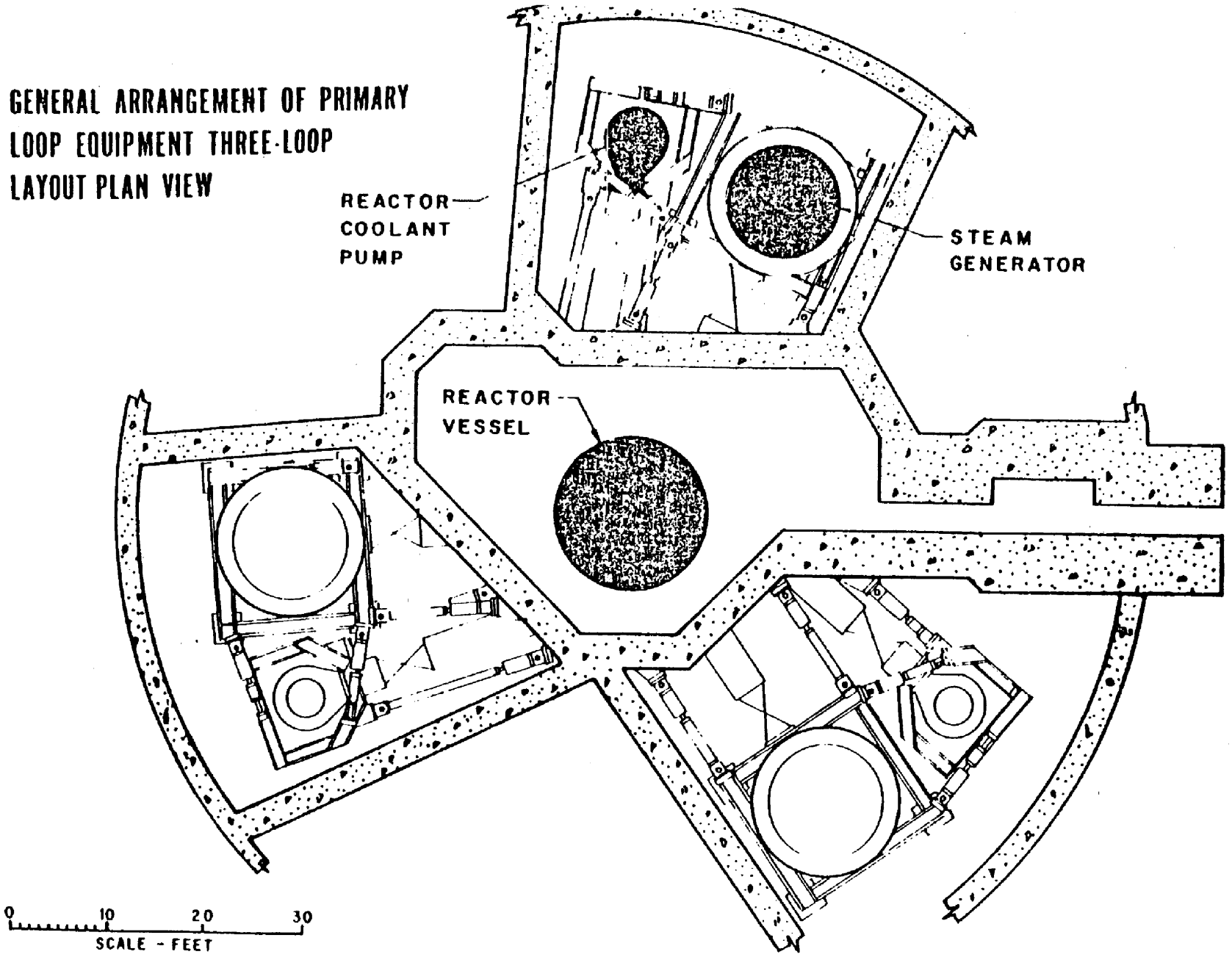

1-3-73

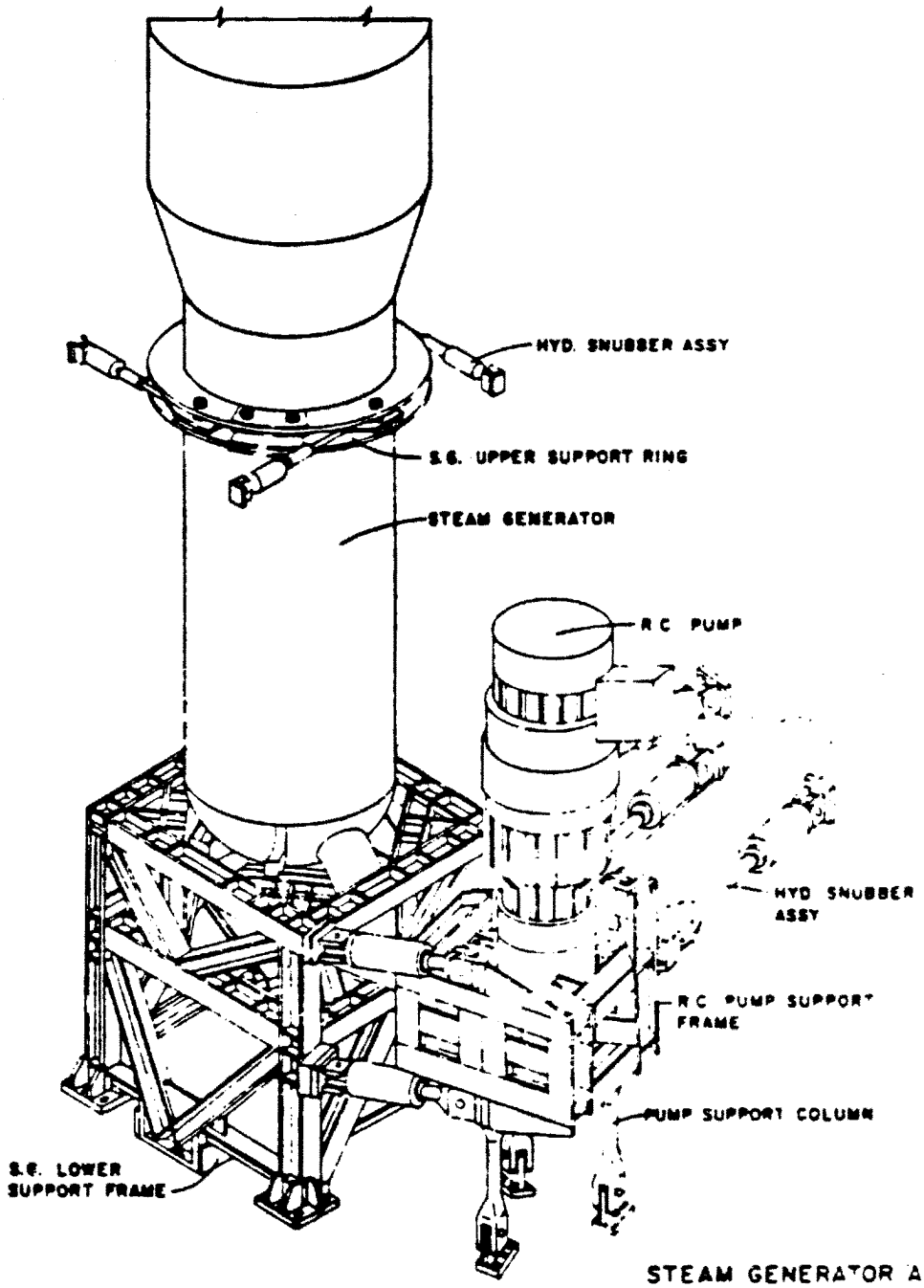

STEAM GENERATOR AND REACTOR COOLANT PUMP

NORTH ANNA POWER STATION
UNITS 1 AND 2

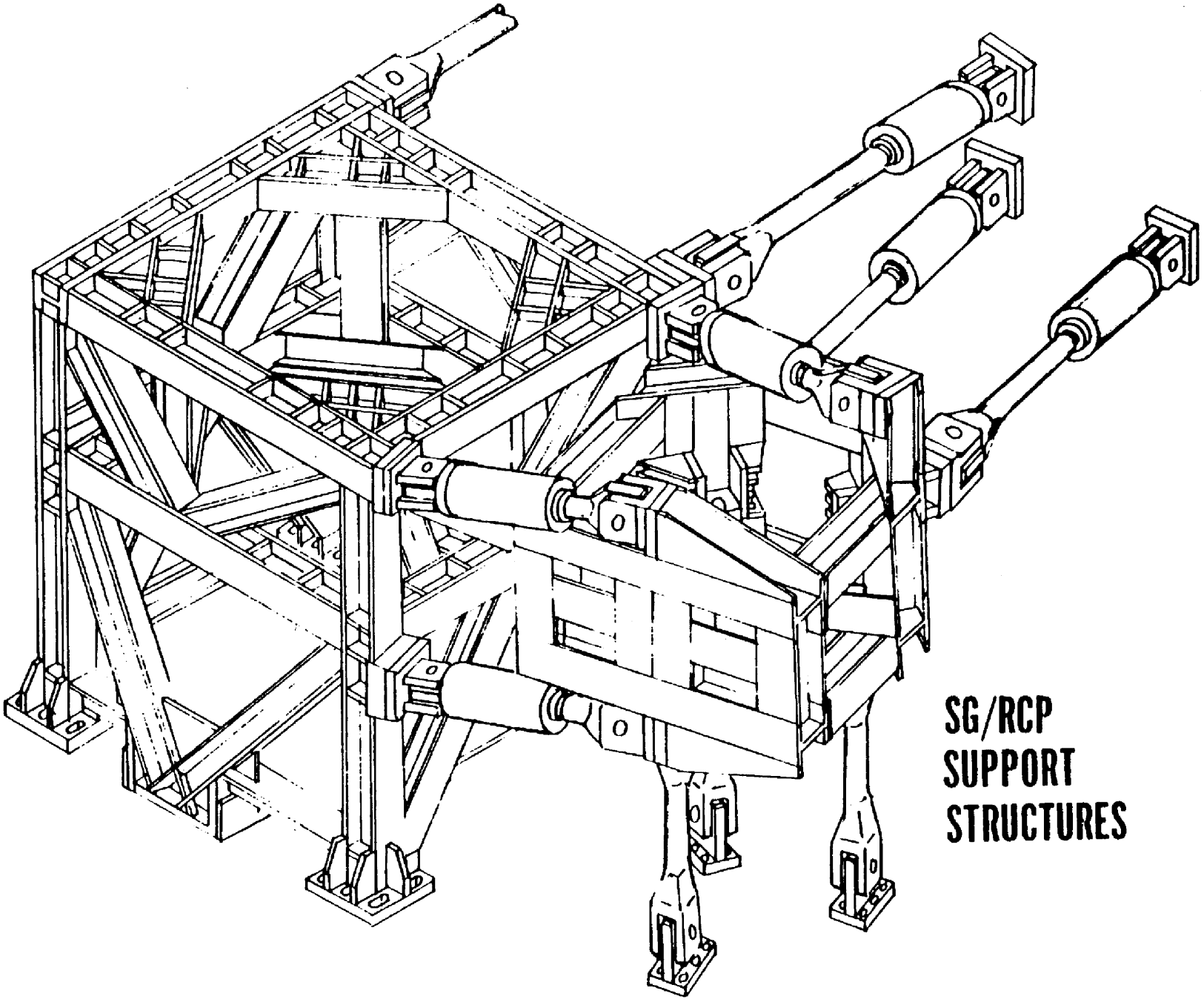

SG/RCP
SUPPORT
STRUCTURES

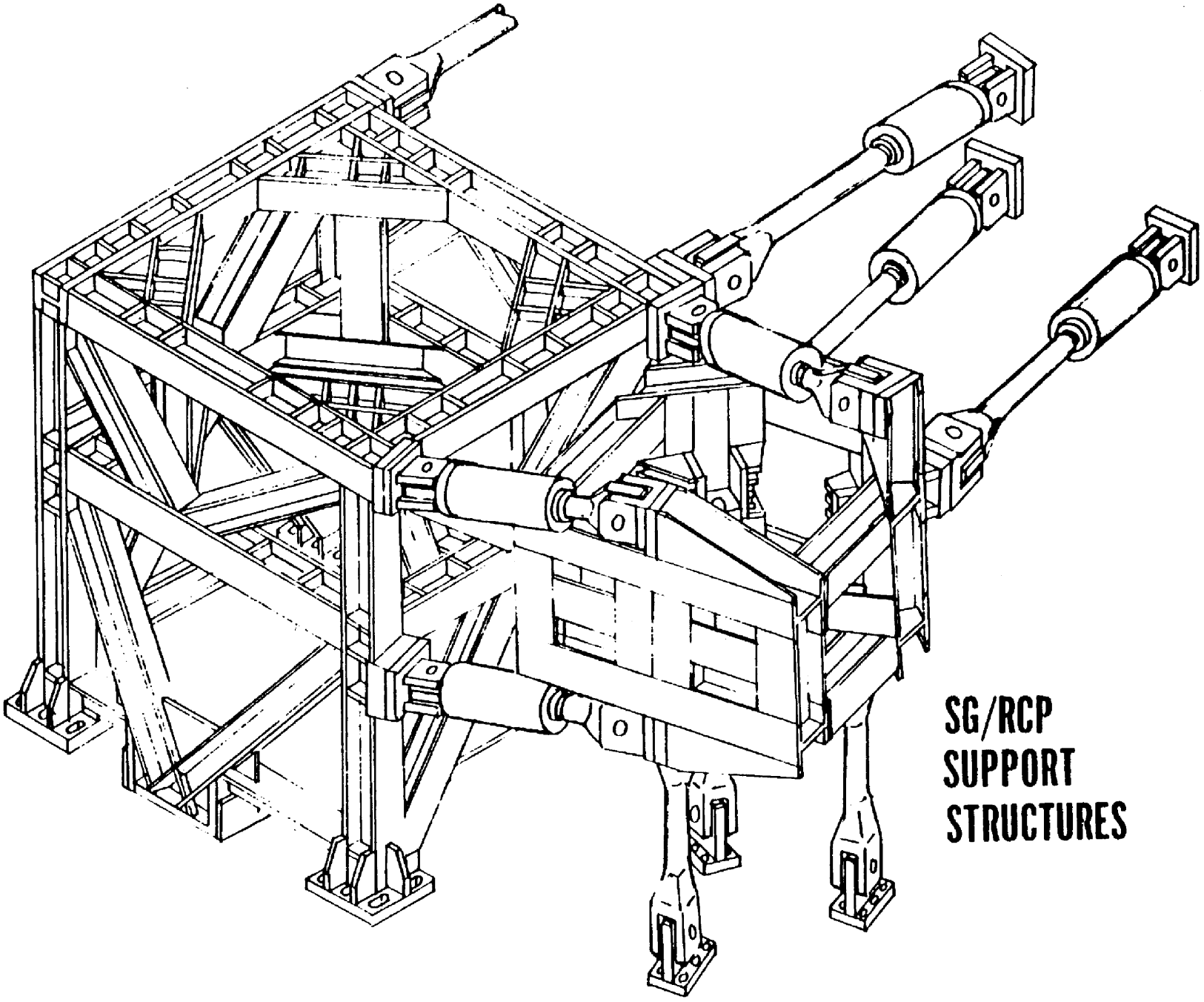

SG/RCP
SUPPORT
STRUCTURES

CRITERIA FOR DESIGN BY ANALYSIS

NORTH ANNA 1 & 2 SUPPORTS

CONDITION	LOAD COMBINATION	ALLOWABLE MEMBER STRESS	A - 36	A - 572
DESIGN	DW + DBE + PR	$F_t = 0.9\ S_y$	$F_t = 32.4$	$F_t = 37.8$

ASME III SUBSECTION NF (1975 SUMMER ADDENDA)

LINEAR TYPE SUPPORTS

CONDITION	LOAD COMBINATION	ALLOWABLE PRIMARY STRESS	SA-36	SA-572
DESIGN	DW + ½ SSE	$F_T = 0.6\ S_Y$ (TT) $F_T = 0.3\ S_Y$	$F_T = 21.6$ (TT) $F_T = 10.8$	$F_T = 25.2$ (TT) $F_T = 12.6$
NORMAL	DW + ½ SSE + S_N			
UPSET	DW + ½ SSE + S_U			
EMERGENCY	DW + ½ SSE + S_E	$F_T = 0.8\ S_Y$ (TT) $F_T = 0.4\ S_Y$	$F_T = 28.8$ (TT) $F_T = 14.4$	$F_T = 33.6$ (TT) $F_T = 16.8$
FAULTED	DW + SSE + PR	LESSER OF: $F_T = 1.2\ S_Y$ OR $F_T = 0.7\ S_U$ (TT) $F_T = 0.6\ S_Y$ (TT) $F_T = 0.35\ S_U$	$F_T = 40.6$ $F_T = 20.3$	$F_T = 42.0$ $F_T = 21.0$

LOWER STEAM GENERATOR SUPPORT FRAME MATERIALS

NORTH ANNA 1 & 2

MATERIAL PROPERTY	MINIMUM SPECIFICATION REQUIREMENTS		CERTIFIED MIL TEST REPORTS	
	A-36	A-572	A-36	A-572
YIELD POINT	36.0	42.0	37.3-54.8	56.5-63.0
TENSILE STRESS	58-80	60.0	65.3-80.0	83.5-91.5
ELONGATION	17.0	17.0	21.5-33.0	24.5-25.0
REDUCTION OF AREA	-	-	45.3-60.9	58.1-62.6

SPECIFICATION: ASTM A-36 & A-572 GR 42

ADDED REQUIREMENTS: UT PLATES & SHAPES $t \geq 3''$

LOWER STEAM GENERATOR SUPPORT FRAME MATERIALS

ASME III, SUBSECTION NF

MATERIAL PROPERTY	MINIMUM SPECIFICATION REQUIREMENTS	
	A - 36	A - 572
YIELD POINT	36.0	42.0
TENSILE STRESS	58 - 80	60.0
ELONGATION	17.0	17.0
* LATERAL EXPANSION	25	25

* ONLY IF REQUIRED IN THE DESIGN SPECIFICATION

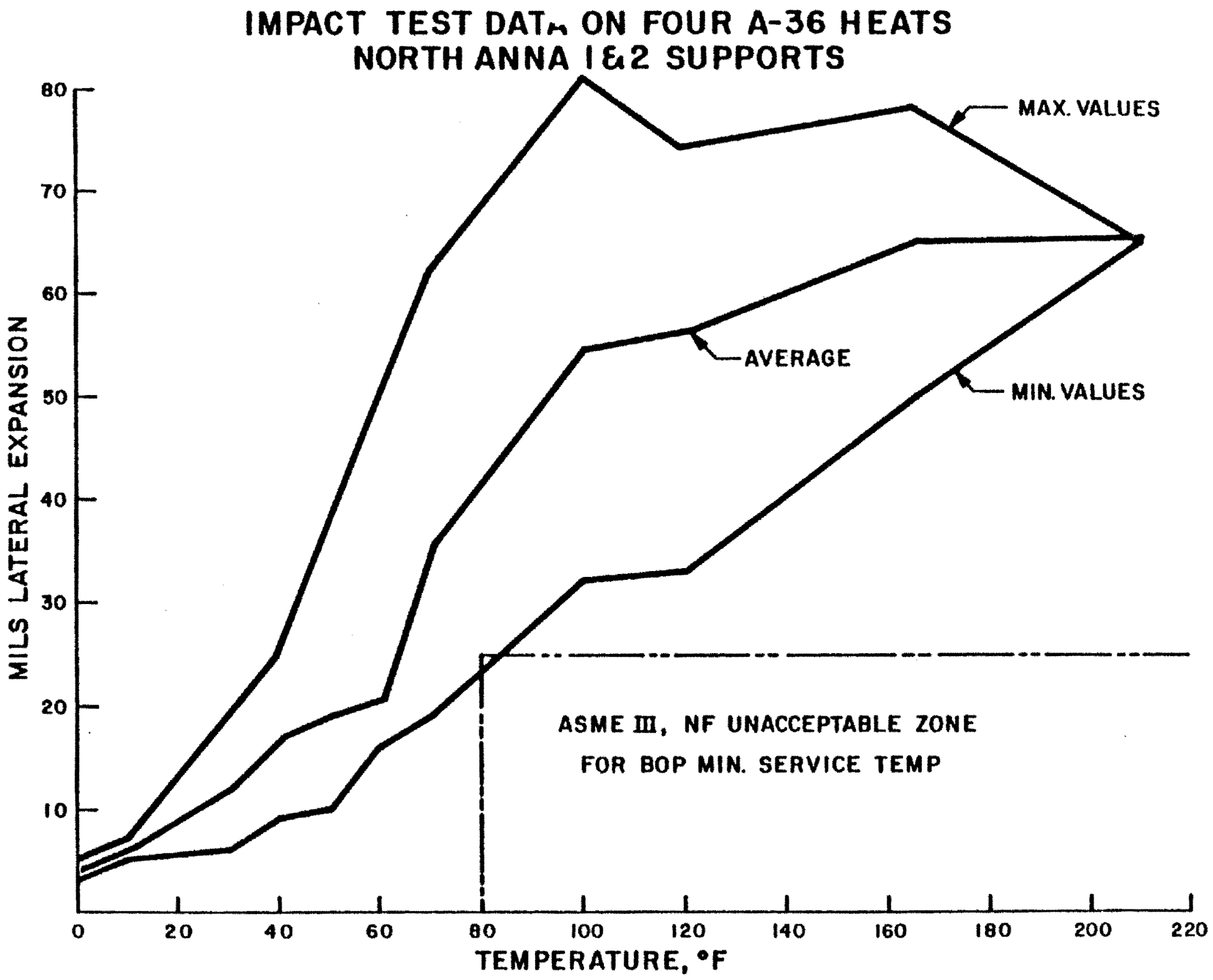
IMPACT TEST DATA ON FOUR A-36 HEATS
NORTH ANNA 1&2 SUPPORTS
MILS LATERAL EXPANSION
80
70
60
50
40
30
20
10
0
20
40
60
80
100
120
140
160
180
200
220
TEMPERATURE, °F
MAX. VALUES
AVERAGE
MIN. VALUES
ASME III, NF UNACCEPTABLE ZONE
FOR BOP MIN. SERVICE TEMP

MATERIAL REQUIREMENTS FOR FORGINGS

NORTH ANNA 1 & 2 - AISI 4340

YIELD POINT KSI	CHARPY-V TESTS PER ASTM-A370			MIN NDTT PER ASTM-E208	UT REQUIRED	MT/PT REQUIRED AFTER MACHINING
	TEMP.	FT-LB. AVE.	FT-LB. MIN.			
90-120	-20F RT*	25 -	20 20	-10	ASME III. N-322 ACCEPTANCE CRITERIA: STRAIGHT BEAM: UNACCEPTABLE IF COMPLETE LOSS OF BACK REFLECTION ANGLE BEAM: UNACCEPTABLE IF REFLECTORS PRODUCE INDICATIONS EXCEEDING AMPLITUDE OF INDICATION FROM THE CALIBRATED NOTCH	ASME VIII. APPENDICES VI OR VIII ACCEPTANCE CRITERIA: MT ALL LINEAR DISCONTINUITIES ARE UNACCEPTABLE PT FOLLOWING ARE UNACCEPTABLE: A) RELEVANT LINEAR INDICATIONS B) FOUR OR MORE ROUNDED DEFECTS IN LINE SEPARATED BY $\frac{1}{16}$" OR LESS
100-125	-20F RT*	25 -	20 20	-10		
120-140	-20F RT*	25 -	20 20	0		
140-160	+25F RT*	25 -	20 20	20		

* AFTER FORGING

MATERIAL REQUIREMENTS FOR FORGINGS -CONT'D

NORTH ANNA #2-AISI 4340

1975 SUMMER ADDENDA. ASME III. SUBSECTION NF

YIELD POINT KSI	NOMINAL WALL THICKNESS	MILS LATERAL EXPANSION	UT REQUIRED	MP/PT REQUIRED AFTER MACHINING
90-120	OVER $\frac{3}{8}$" TO 1" OVER 1"	15 25	OPTIONAL: ACCEPTANCE STANDARDS UNSPECIFIED	OPTIONAL: ACCEPTANCE STANDARDS UNSPECIFIED
100-125	OVER $\frac{3}{8}$" TO 1" OVER 1"	15 25	OPTIONAL: ACCEPTANCE STANDARDS UNSPECIFIED	OPTIONAL: ACCEPTANCE STANDARDS UNSPECIFIED
120-140	OVER $\frac{3}{8}$" TO 1" OVER 1"	15 25	OPTIONAL: ACCEPTANCE STANDARDS UNSPECIFIED	OPTIONAL: ACCEPTANCE STANDARDS UNSPECIFIED
140-160	OVER $\frac{3}{8}$" TO 1" OVER 1"	15 25	OPTIONAL: ACCEPTANCE STANDARDS UNSPECIFIED	OPTIONAL: ACCEPTANCE STANDARDS UNSPECIFIED

LOWER STEAM GENERATOR SUPPORT FRAME FABRICATION

ITEM	NORTH ANNA 1 & 2	ASME III. NF
MACHINED SURFACES	MT OR PT PER APPENDICES VI OR VIII OF ASME VIII	NO SPECIAL REQUIREMENTS
WELDING PROCEDURES & WELDING OPERATORS	ASME IX	ASME IX SUPPLEMENTED BY ASME III (NF-4330) IF IMPACT TESTS REQUIRED BY DESIGN SPECIFICATION
POST WELD HEAT TREATMENT	UCS-56 OF ASME VIII	ASME III (NF-4620) (BASIC[illegible]Y SAME AS UCS-56)

LOWER STEAM GENERATOR SUPPORT FRAME
NON-DESTRUCTIVE EXAMINATION

METHOD	NAS - 170	ASME III SUBSECTION NF	
		PRIMARY MEMBERS	SECONDARY MEMBERS *
RADIOGRAPHY	UW-51 OF ASME VIII ON SELECTED WELDS. NO CRACKS, OR INCOMPLETE FUSION OR PENETRATION NO ELONGATED SLAG INDICATIONS > $\frac{3}{4}$" FOR t > $2\frac{1}{4}$" NO POROSITY IN EXCESS OF APPENDIX IV	ALL FULL PENETRATION & FULL FILLET WELDS, IF MEANINGFUL, OTHERWISE UT. NO CRACKS, OR INCOMPLETE FUSION OR PENETRATION, OR ELONGATED INDICATIONS > $\frac{3}{4}$" FOR t > $2\frac{1}{4}$" NO LIMIT ON POROSITY PROCEDURES PER SECTION V	NOT REQUIRED
MT OR PT	REQUIRED ON ALL MACHINED SURFACES REQUIRED ON ALL WELDS NOT RADIOGRAPHED REQUIRED ON ROOT, 25% 50%: 75% AND FINAL PASS PER APPENDICES VI OR VIII OF ASME VIII NO CRACKS OR LINEAR INDICATIONS	NOT REQUIRED ON MACHINED SURFACES REQUIRED ON ALL ABOVE WELDS NOT RT OR UT REQUIRED ON FINAL PASS ONLY PROCEDURES PER SECTION V NO CRACKS OR LINEAR INDICATIONS NO ROUNDED INDICATIONS > $\frac{1}{16}$"	NOT REQUIRED
VISUAL	NOT REQUIRED	ALL WELDS NOT LISTED ABOVE: REQUIRED (NF-5360) NO CRACKS OR LINEAR INDICATIONS	REQUIRED (NF-5360) NO CRACKS OR LINEAR INDICATIONS

* BRACING TYPE MEMBERS WITH STRESS $\leq$ 50% OF ALLOWABLE

CR20 '9
AK:bwl
s^

MR. GOLDSTEIN: I will address the analytical results not only that were the result of the Final Design documentation, but some supplementary analyses conducted, as well as the results which will be addressed further in the discussion.

Here we have a slide (Fig. 1) showing the three loops typical of the North Anna plant with one loop of the steam generator and pump shown with the supports.

The basic analytical technique utilized dynamic results from Westinghouse.

The results of those analyses were transmitted to Stone and Webster in the form of time history displacements and rotations at the nodes representing the centerline attachment points of the steam generator and reactor coolant pumps to the support frames.

A detailed structural model (Fig. 2) was used to determine load and stresses in the structure.

This third slide (Fig. 3) indicates merely the main structural elements of the steam generator frame that we will be addressing.

The yellow members are the snubbers and the red members are the corner frame elements, those elements which would take the load directly from the steam generator feet and the blue members are the general structure

1 itself. Before we talk too much about the details, it is
2 perhaps important to note some of the conservatisms that are
3 in the design. (Fig. 4)
4 The first three conservatisms are generally those
5 inherent in the materials themselves. If large cracks were
6 present, the leaks could be detected. The existence of full
7 double-ended rupture or full split are mechanistic simplifi-
8 cations that are more conservative than might be the case.
9 In the analysis of the dynamics, break time --
10 force function rise time of one millisecond has been used.
11 This is a conservative premise, really. Longer times
12 analyses indicate the results could be less. We are consider-
13 ing the simultaneous application for stressing of earthquake
14 and pipe rupture.
15 We are using the maximum pipe rupture stresses,
16 regardless of time. Which is to say, in the course of
17 one pipe rupture postulation, of the several attendant to
18 the design, we would choose the maximum case, regardless
19 of time for any member.
20 The seventh conservatism noted in our stressing of
21 these frames is the adding of the earthquake stress with the
22 maximum pipe rupture stress absolutely. It is a developing
23 practice to consider that perhaps these stresses should be
24 combined by the square root of the sum of the squares techniques,
25 since these are more random processes.

bw3

To reduce all of the data that has been developed in final stressing of the frame, we are presenting here maximum beam stresses due to all of the analysis. There are hundred and hundreds of pages of stress analysis involved here.

But after all of that is said and done, the summary of maximum beam stresses reduces to this data.

These three beams -- for which we will show the stress in the next slide -- and five members in the steam generator frame, are what we conclude to be the maximum stressed elements.

Now this slide (Fig. 7) indicates that for the steam generator frame, all of the members of those maximum five stress members, all meet nine-tenths of yield as specified.

It should be pointed out that for the pump frame, we did have to go to mill certification reports to get a higher strength certification. Our initial stress criteria was nine-tenths of yield.

If one were to address the current NF criteria for those frames; if they were to be applied to these frames, the slide indicates that the factors of safety would be increased. Now to give you some indication, some feel for how the stresses are distributed through the frame. For the verification of

General Reporters, Inc.

bw4

load we have prepared the following slides which, in your handout, show the full overlay, but for purposes of presentation we will present them in a phased manner. For the integral frame the deadweight stresses (Fig. 8) show that all of the stresses in the frame for deadweight are less than 6 ksi. This is the condition for which the frame exists for 90, 99 percent of its life, less than 6 ksi.

If we now examine the situation where we are combining deadweight plus the design basis earthquake, (Fig. 9) we can examine those members of the frame which have stresses of less than 6 ksi, those additional members now which are in the range of 6 to 12 ksi, which is a predominant portion of the frame and those members of the frame which are within the range of 12 to 24 ksi.

This slide indicates, as well, for the combination of deadweight plus design basis earthquake no stresses in the frame exceed 24 ksi.

If we take the final situation, of our design criteria which was deadweight plus design basis earthquake plus LOCA, (Fig. 10) we can see only a few members are stressed below six ksi.

We show more at the six to twelve ksi range. Still more and perhaps a predominant set at 12 to 24 ksi.

Finally, for this most severe combination of load

ral Reporters, Inc.

bw5

1 those members of the frame stressed in excess of 24 ksi, but
2 as pointed out in the previous slide, less than the stress
3 limit. It is apparent those are the members being loaded
4 most directly by the steam generator foot.
5 One characteristic
6 of this frame that is important for further discussion,
7 is the redundancy of this
8 frame.
9 If certain parts of the frame were for any reason
10 incapable of sustaining all of the load integrity inferred
11 to them what would happen? How would the load be redistributed
12 into the frame. The one characteristic of the heavy
13 space frames is that they are redundant and they do exhibit good
14 redistribution of load into other members.
15 To do this, we arbitrarily, analytically took out
16 those members marked in red and re-evaluated the frame for a
17 structural model as shown here. (Fig. 11)
18 Once again, I will go through the stress overlays
19 as shown. For deadweight, most, but not all of the frame
20 members still are less than 6 ksi with a few members popping
21 into the 6 to 12 ksi range. (Fig. 12)
22 For the deadweight plus earthquake, we can see
23 zero to 6 ksi range, the 6 to 12 ksi range and, again, certain
24 members of the frame in the 12 to 24 ksi range.
25 Again, given this hypothetical situation for the

deral Reporters, Inc.

1 combination of deadweight plus earthquake the stresses are
2 still well within limits.
3 For the final and most conservative situation of
4 deadweight plus earthquake plus LOCA the combination of stresses,
5 (Fig. 14) zero to 6, 6 to 12, 12 to 24 ksi and, finally, in excess
6 of 24 ksi. It is important to note that in this state of
7 presentation those stresses in excess of 24 ksi did exceed
8 the 32 ksi, nine-tenths of yield, but do meet the NF criteria.
9 We did meet, for this hypothetical and arbitrary example, the
10 stress limits of NF.
11 finally, I would like to address some issues of supplemental analyses that were
12 done to address some subjects that will be discussed further.
13 We were asked to look for those stresses in
14 the frame that were typically of short transverse variety
15 and determine what their magnitude might be.
16 We defined for the purposes of presentation (Fig. 15) two
17 types of interconnection, those for which the webs of
18 the I-beam were coplanar, and those for which they were
19 perpendicular to one another.
20 This slide (Fig. 16) will indicate those members that are
21 addressed in the following tabulation. Mostly, once again,
22 corner elements.
23 This slide (Fig. 17) tabulates those stresses for the
24 shown in the previous slide indicating the member and members
25 joint members and most particularly that the total stress,

ederal Reporters, Inc.

bw7

1 maximum evaluation found by this stress was 12.3 ksi.

2 That is measured against the current allowable

3 of 20.3 ksi.

4 I should point out also that while this analysis

5 was being done an investigation was performed to determine

6 the maximum strain rates that could be deduced

7 from the dynamic analysis.

8 Two separate types of estimates were

9 done, the results of which indicated that the maximum

10 strain rates we would anticipate would be two-tenths of an inch

11 per inch per second. This last slide is an attempt to address

12 several more recent issues, particularly the high cycle

13 fatigue design aspects of Article 17, Appendix 17 of the Code.

14 For a transient case, namely, a power change

15 transient, plus or minus three degrees, which was a high

16 cycle imposition on the frame, we investigated the stress

17 input that such a transient would induce into the

18 frame.

19 For that plus or minus three degrees, we calculate

20 a plus or minus 1.28 ksi stress range.

21 Now this number is important in terms of

22 comparison to the most limiting case of Appendix 17, regardless

23 of the load type or stress category which is plus or minus

24 3 ksi, stress range of 6 ksi.

...deral Reporters, Inc.

25 So we are well within that limitation for high

bw8

cycle consideration. A point has been made about reactor coolant pump motions during operation.

An investigation was made of those displacements and those displacements imposed on the pump frame yielded stresses -- these are twice that, so the actual range of stress is actually half of this number.

Again, we well within any possible consideration and almost at the negligible level.

That concludes my presentation.

I would now like to introduce Jon Cavallo, who will address the topic of the weld repair.

(Documents follow.)

ES3

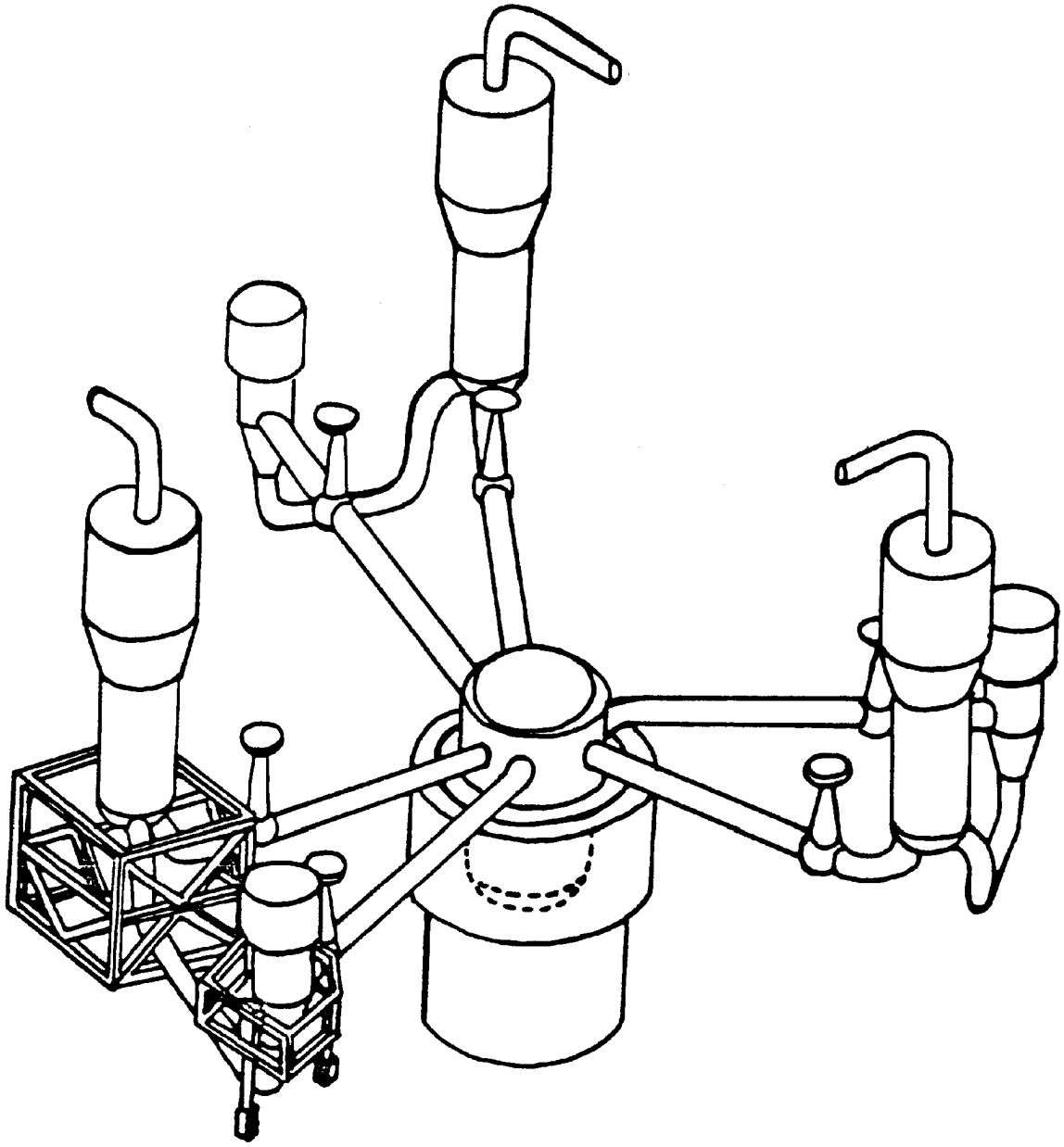

RCP/SG DETAILED STRUCTURAL MODEL

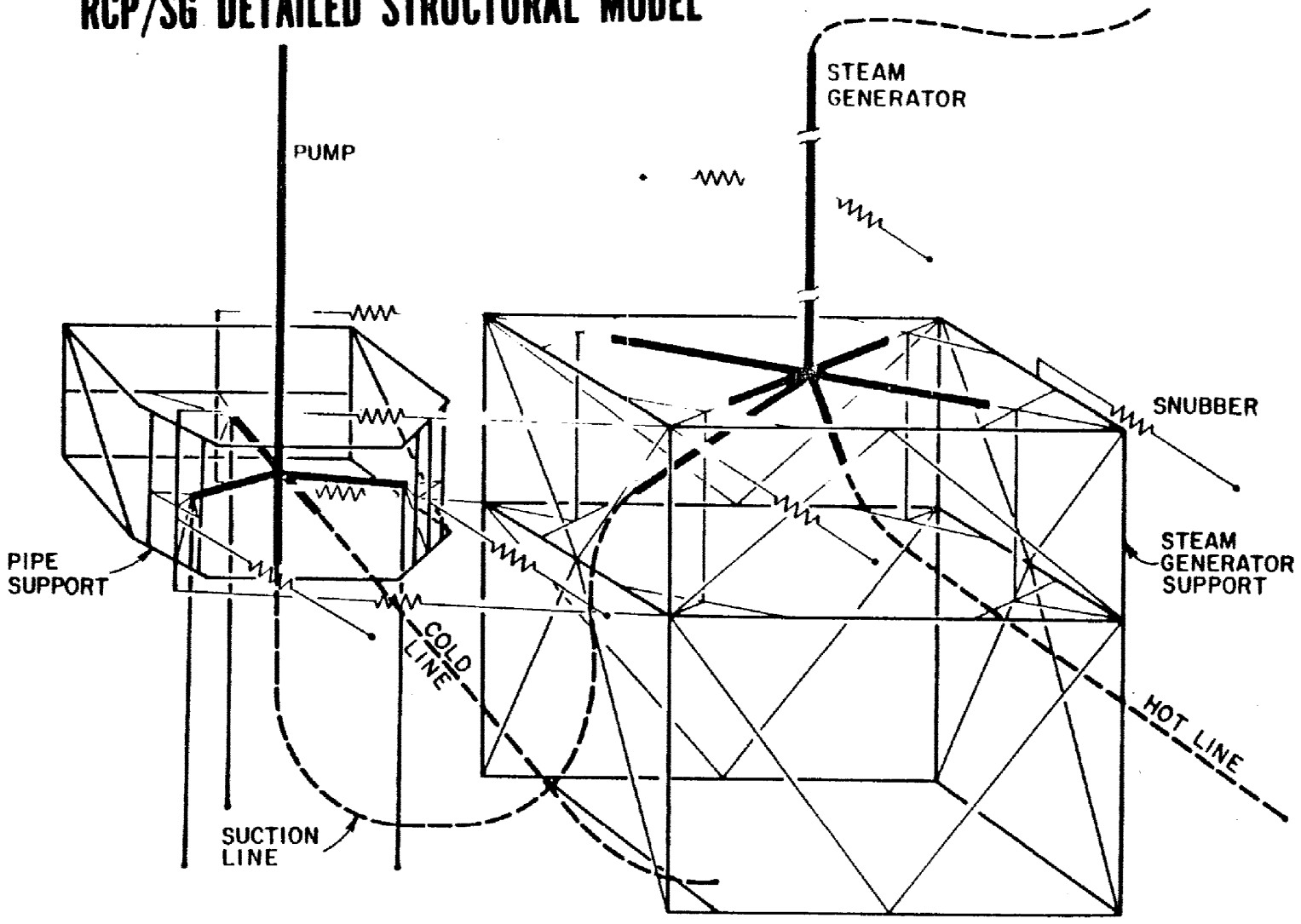

INTEGRAL FRAME

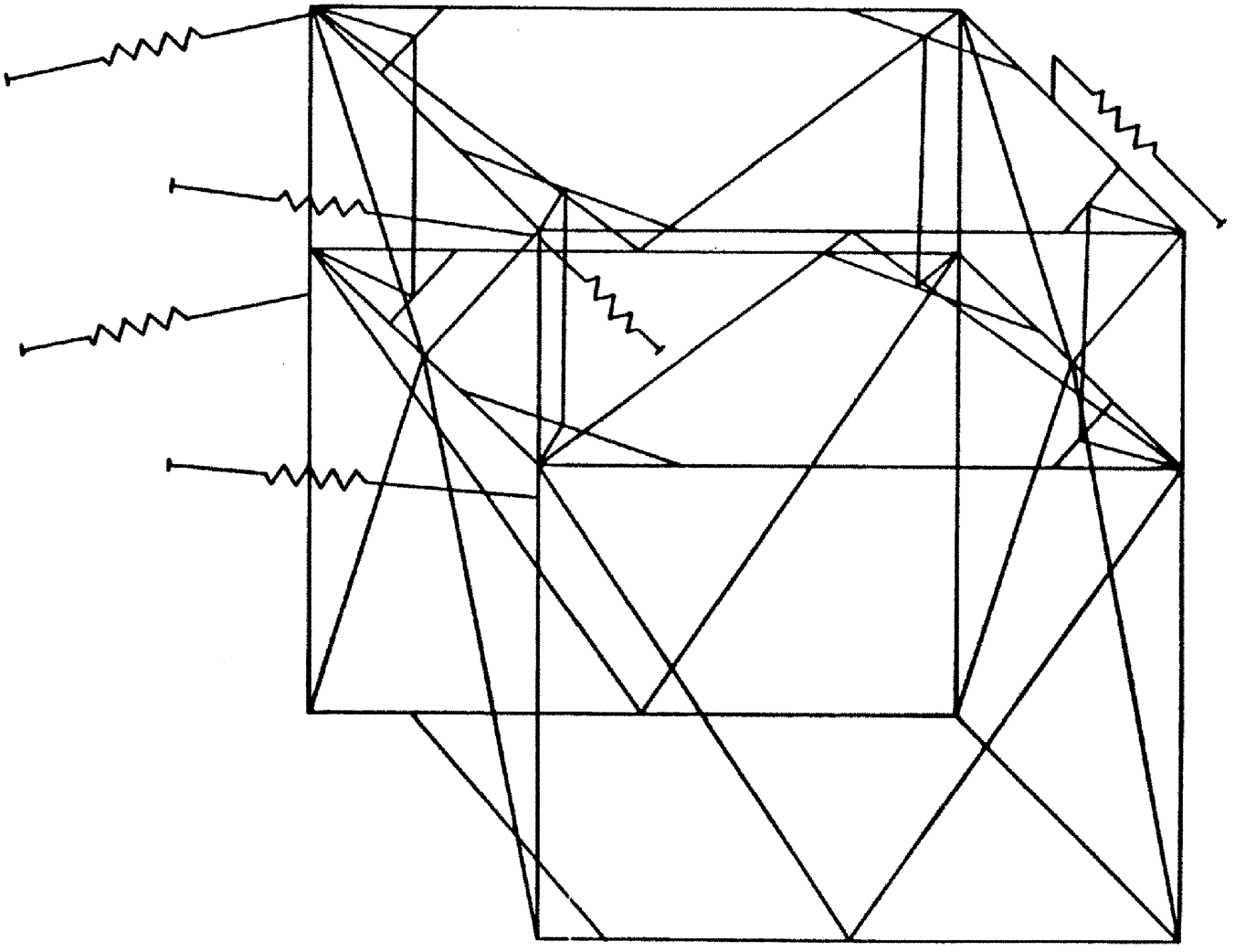

C O N S E R V A T I S M S

1. LEAK BEFORE BREAK
2. FULL D. E. R.
3. FULL SPLIT
4. F. F. RISE TIME (1 ms)
5. SIMULTANEOUS CONSIDERATION OF E. Q. • P. R.
6. USING MAX. P. R. STRESS REGARDLESS OF TIME
7. ABSOLUTE SUMMING OF MAX. E. Q. + MAX. P. R. STRESSES (NOT SRSS)

RCP/SG DETAILED STRUCTURAL MODEL

MAXIMUM BEAM STRESSES

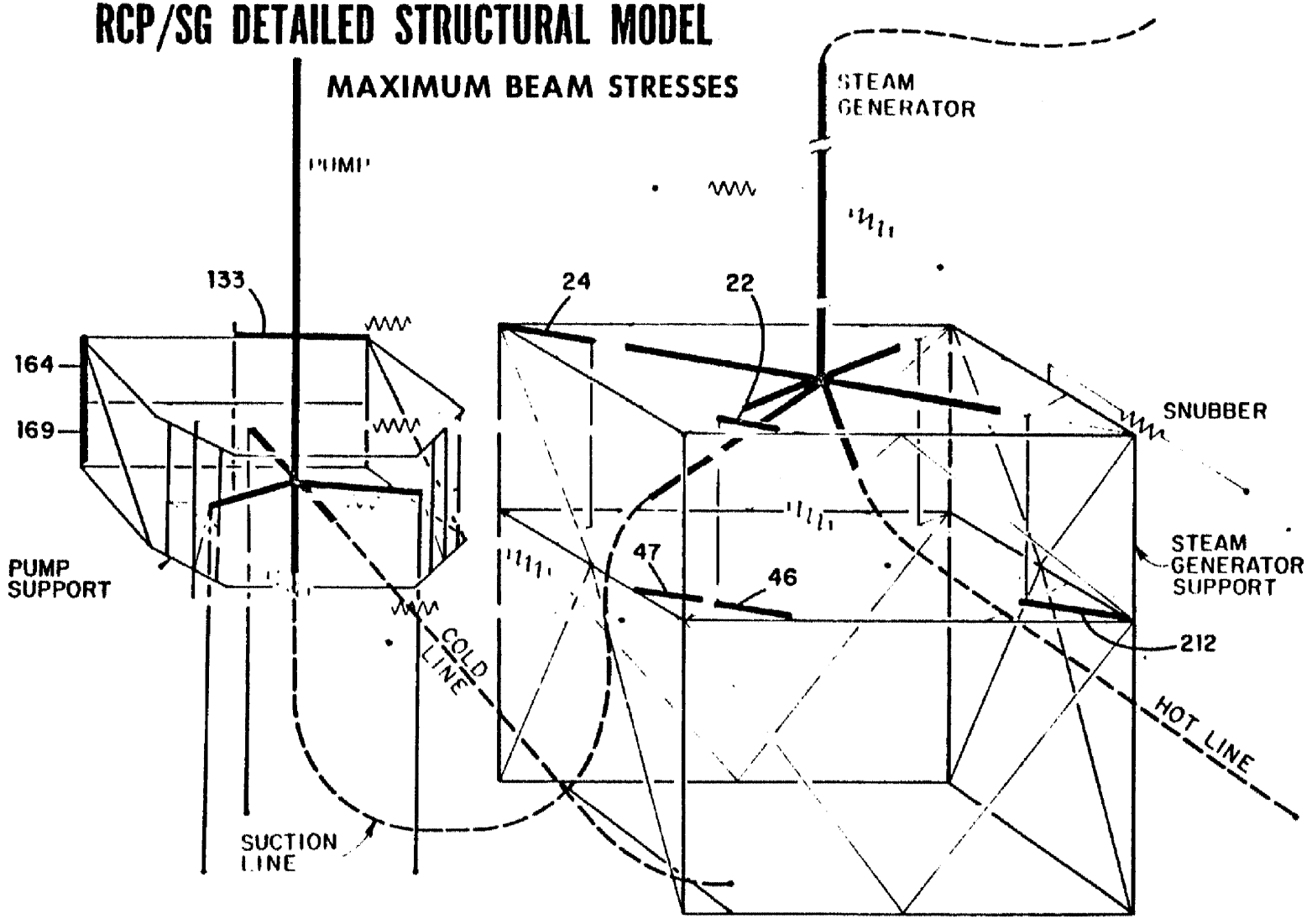

COMPARISON OF MAXIMUM BEAM STRESSES TO DESIGN CRITERIA

				INITIAL CRITERIA		N. F. CRITERIA	
	MEMBER NO.	BREAK NO.	TOTAL STRESS (KSI)	ALL. STRESS 90% OF MIN. YIELD KSI	FACTOR OF SAFETY	ALL. STRESS 70% OF ULT. YIELD KSI	FACTOR OF SAFETY
STEAM GENERATOR SUPPORT FRAME MEMBERS	22	7	19.19	0.9(36)=32.4	1.63	0.7(58)=40.6	2.12
	24	4	18.03	0.9(36)=32.4	1.80	0.7(58)=40.6	2.25
	46	7	30.57	0.9(36)=32.4	1.06	0.7(58)=40.6	1.33
	47	4	20.83	0.9(36)=32.4	1.55	0.7(58)=40.6	1.95
	212	7	20.82	0.9(36)=32.4	1.56	0.7(58)=40.6	1.95
REACTOR COOLANT PUMP SUPPORT FRAME MEMBERS	133	2	35.14	0.9(39.8)=35.5 *	1.01	0.7(58)=40 6	1.16
	164	12	28.94	0.9(36)=32.4	1.12	0.7(58)=40.6	1.40
	169	12	34 26	0.9(39.8)=35.5 *	1.04	0.7(58)=40.6	1.19

*90% OF ACTUAL YIELD

INTEGRAL FRAME
DEAD WEIGHT

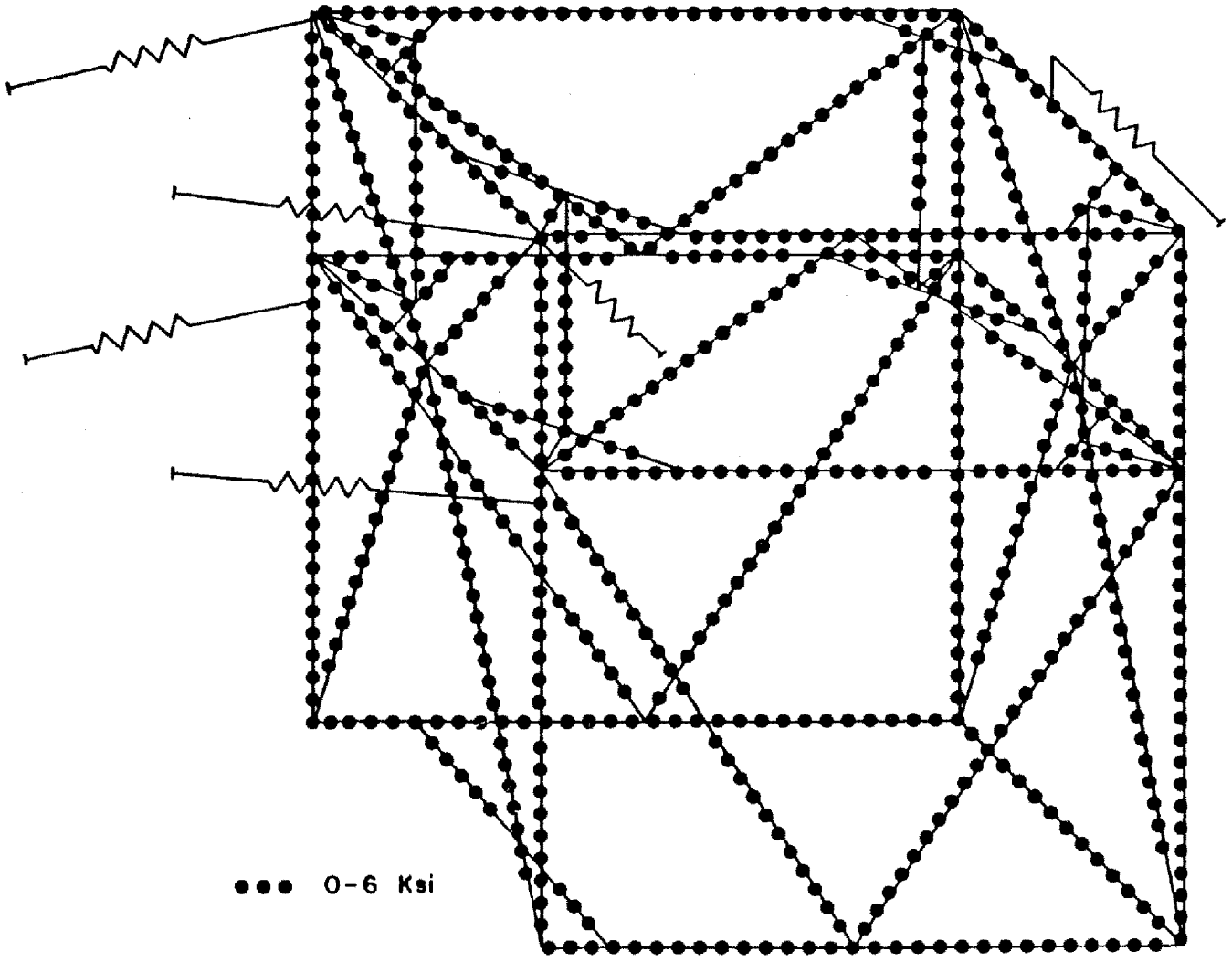

76-6286

INTEGRAL FRAME

DEAD WEIGHT & DBE

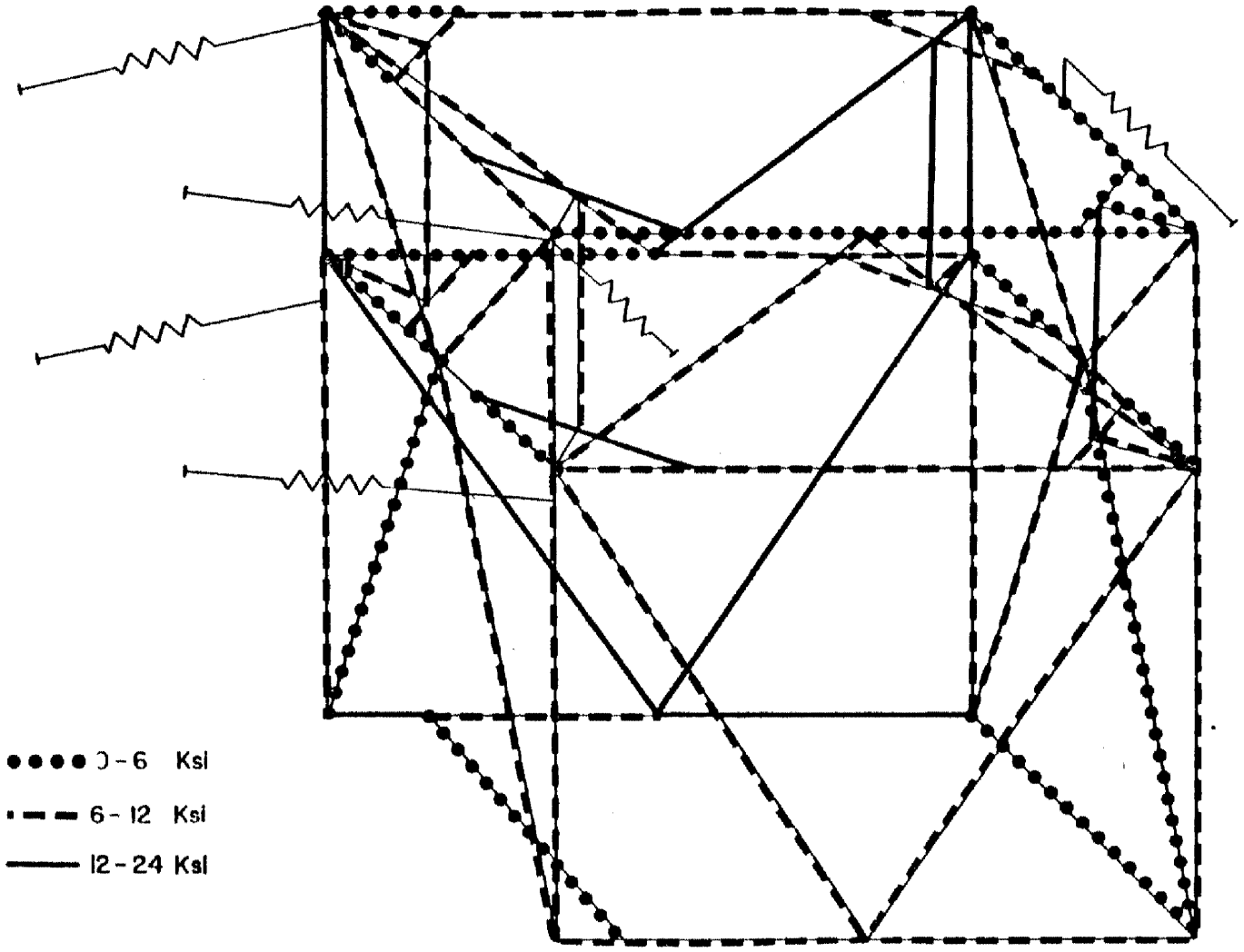

INTEGRAL FRAME

DEAD WEIGHT + D.B.E. + LOCA

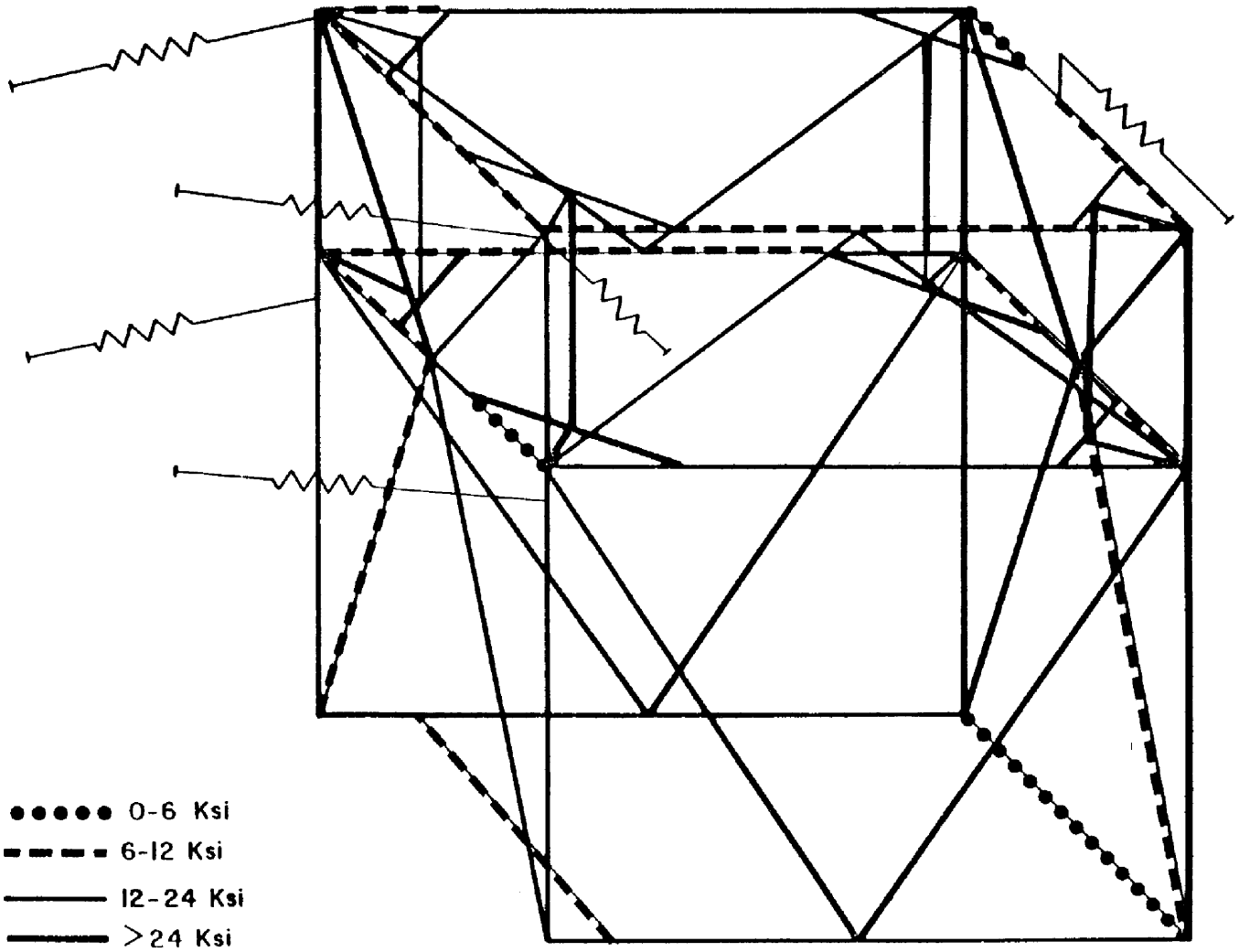

76-6288

REDUNDANCY MODEL

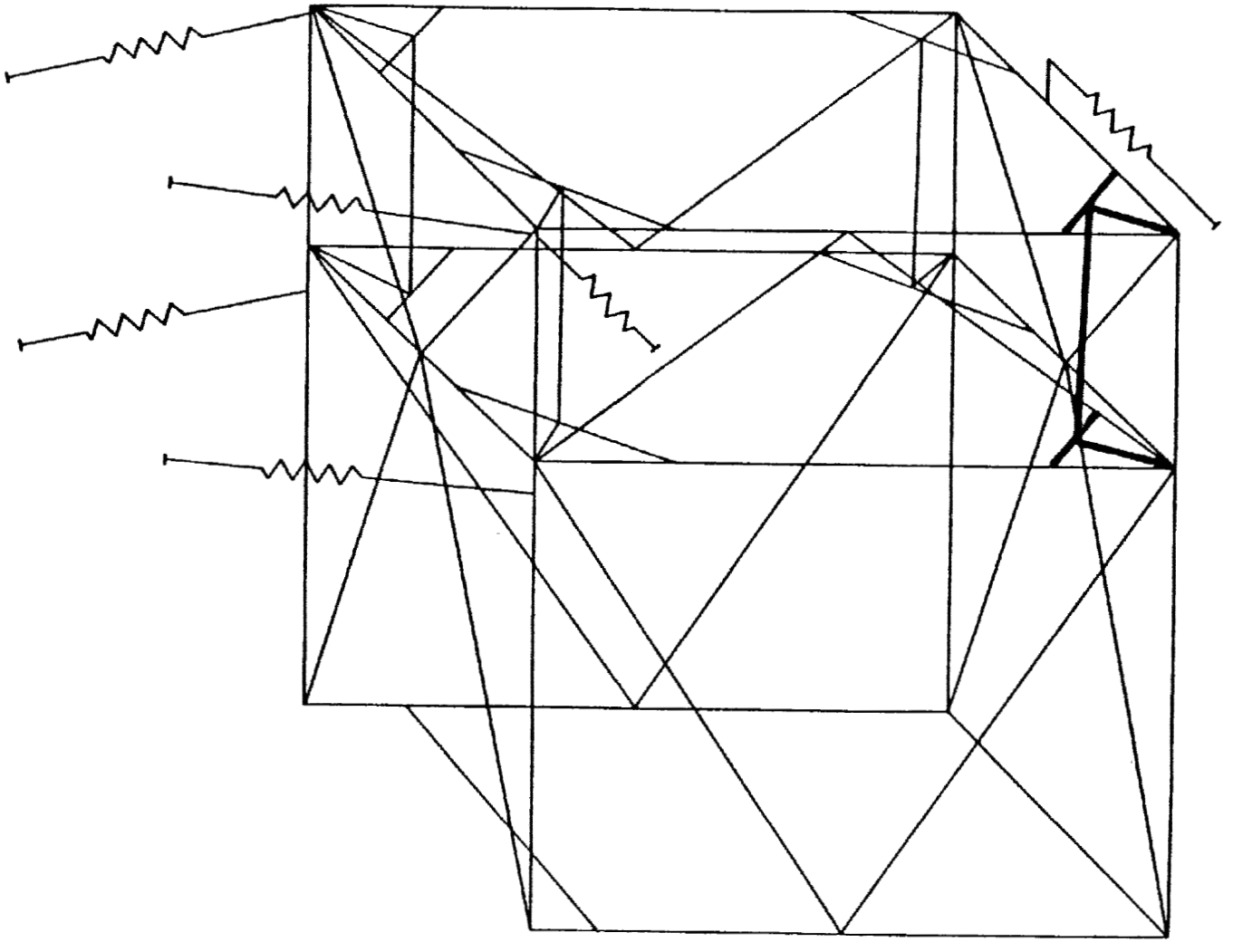

REDUNDANCY MODEL
DEAD WEIGHT

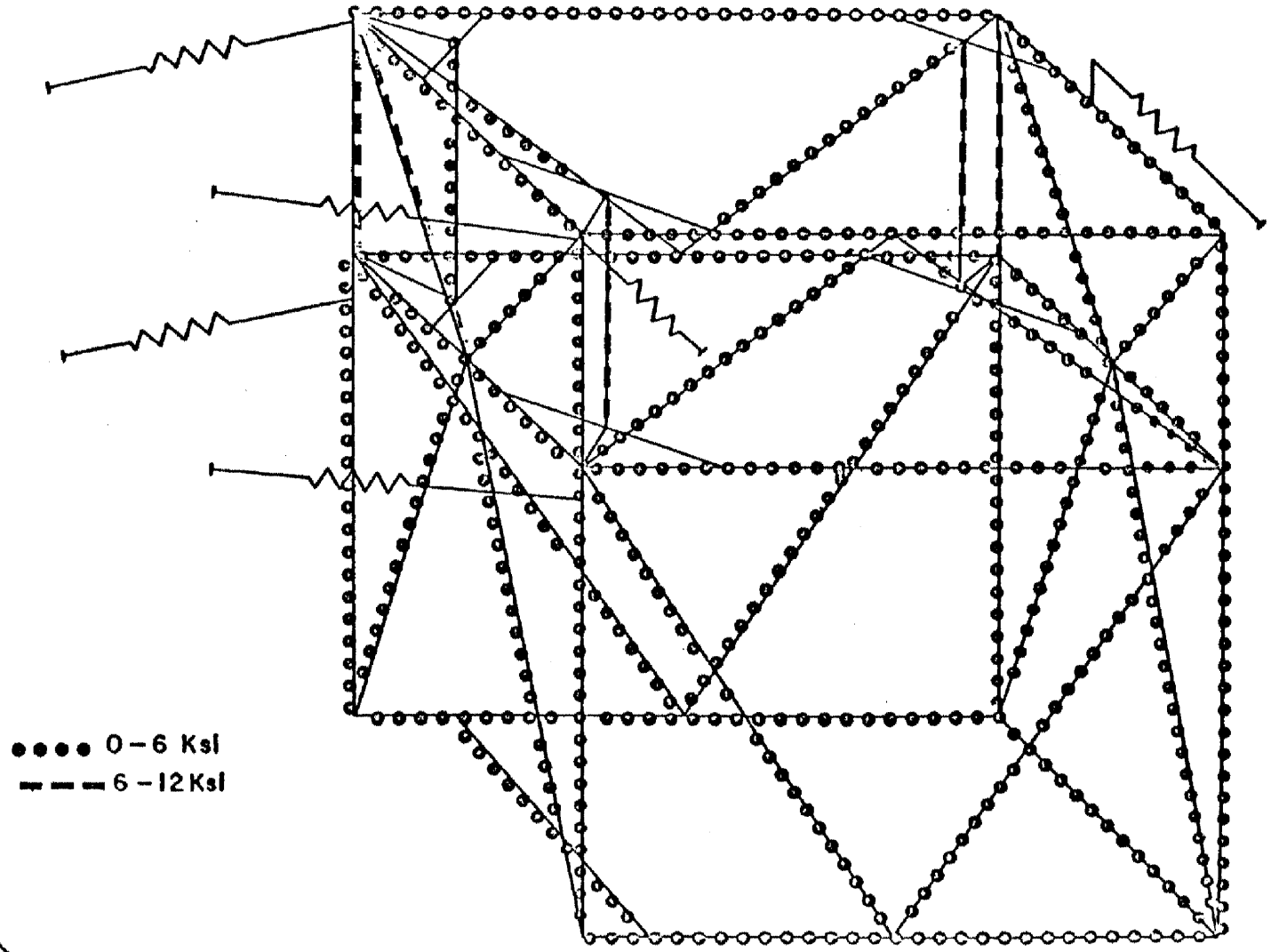

REDUNDANCY MODEL
DEAD WEIGHT + DBE

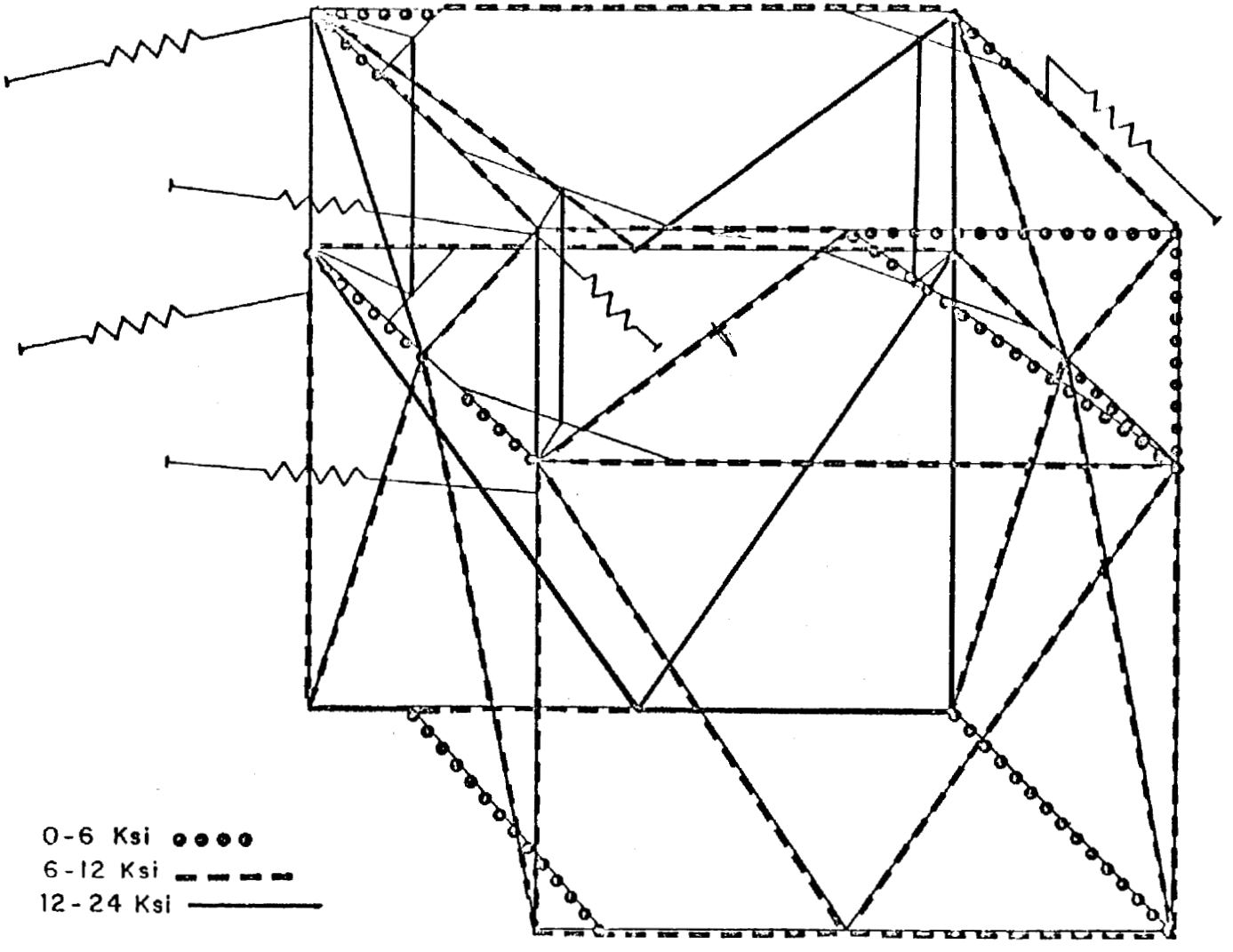

REDUNDANCY MODEL

DEAD WEIGHT + D.B.E. + LOCA

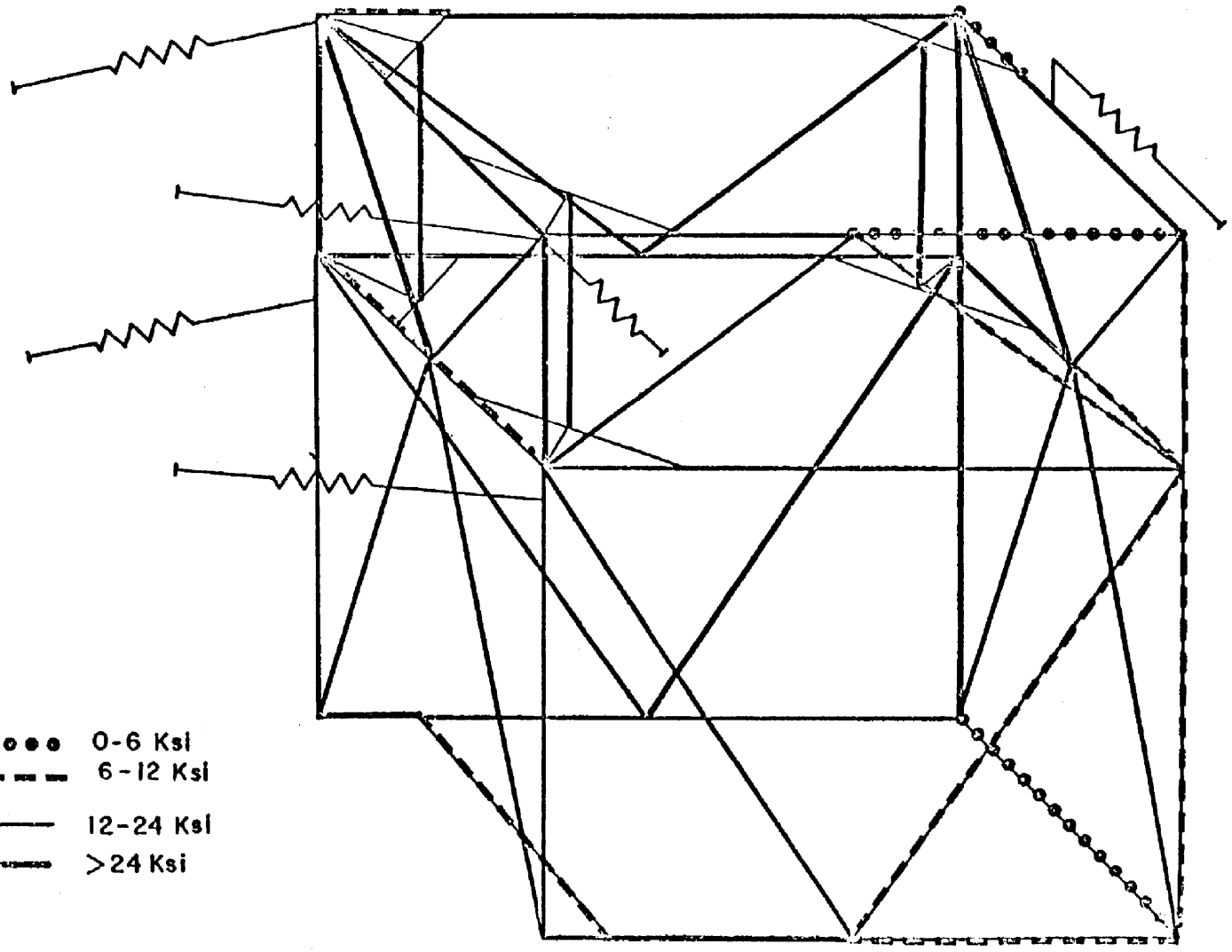

TYPICAL BEAM-TO-BEAM JOINTS CONSIDERING STRESSES IN SHORT TRANSVERSE DIRECTION

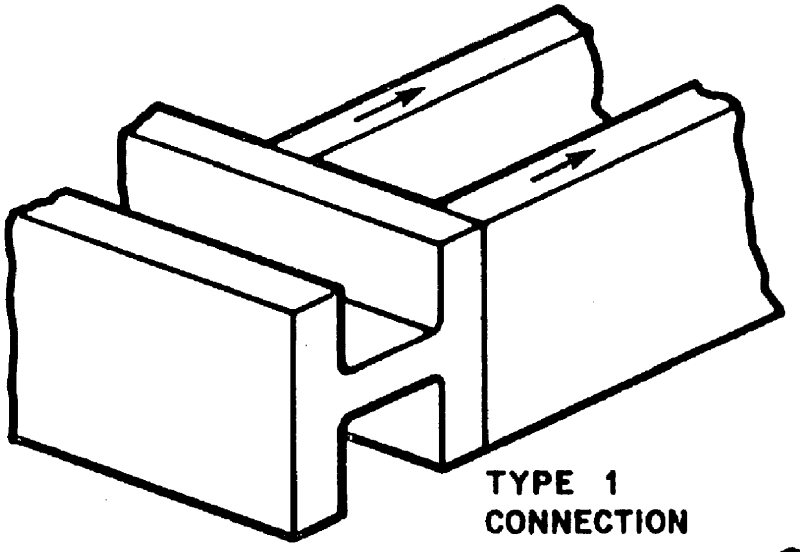

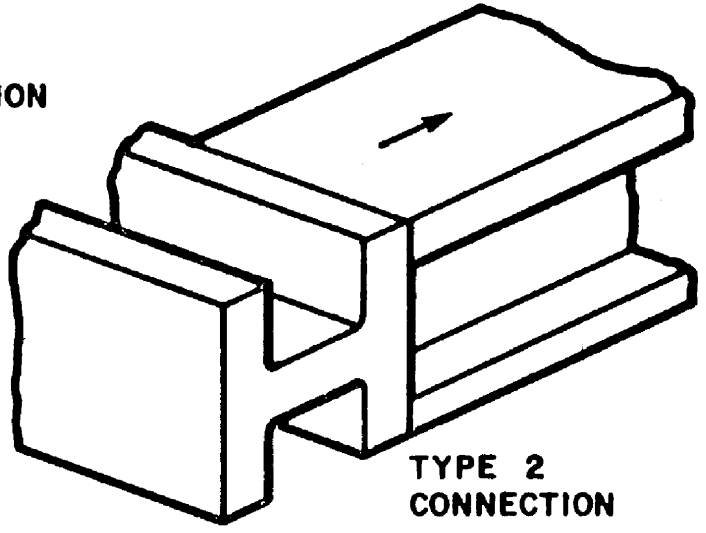

76-6296

SELECTED MEMBERS & JOINTS LOADED IN THROUGH TRANSVERSE DIRECTION

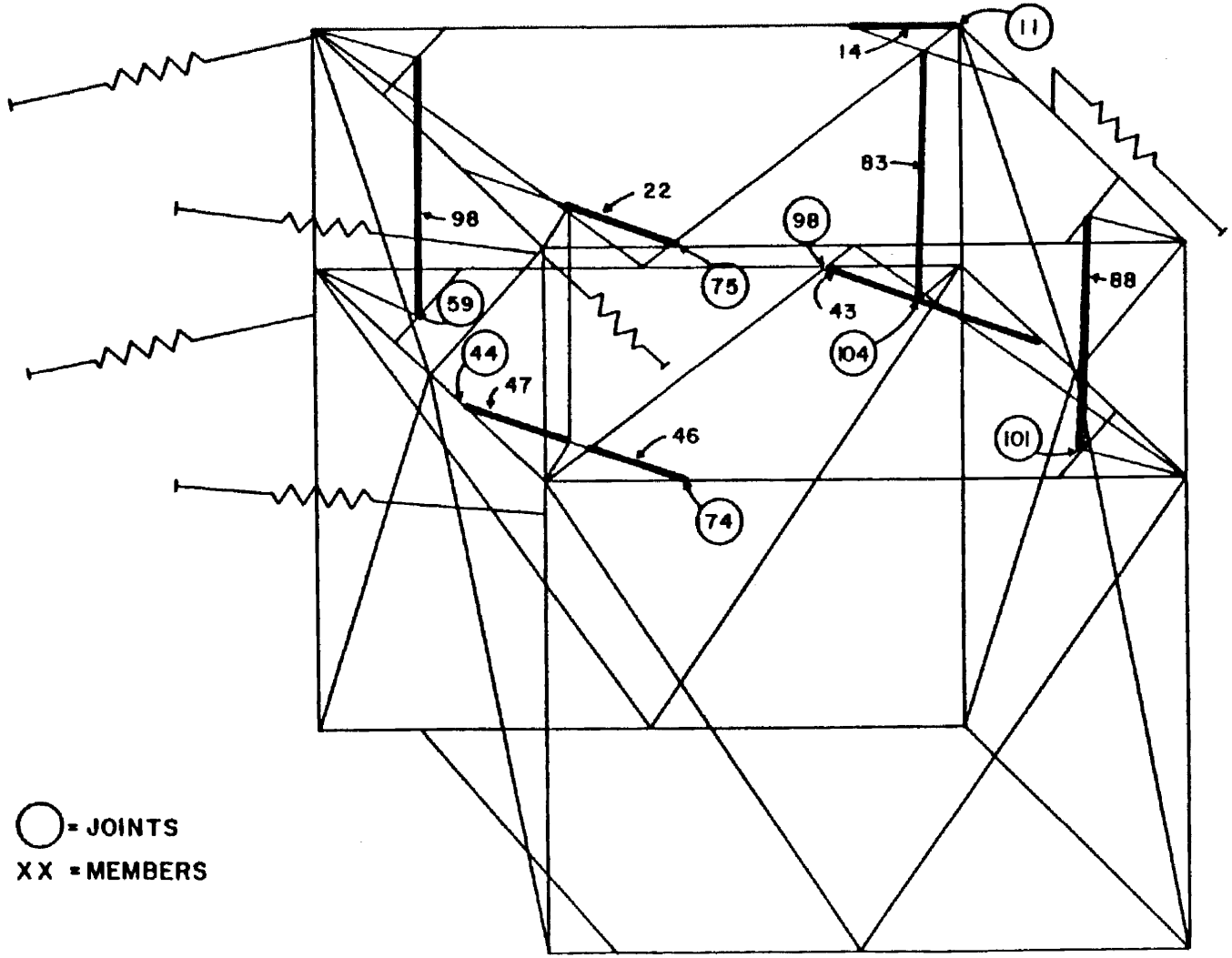

76-6284

THROUGH TRANSVERSE STRESSES AT MEMBER CONNECTION WELDS

MEMBER NO.	JOINT NO.	PIPE BREAK CASE	DEAD WEIGHT PLUS PIPE BREAK STRESSES	SEISMIC STRESS	TYPE OF CONNECTION	TOTAL STRESS
14	111	7	6.48	5.82	1	12.30
22	75	12	1.46	1.66	1	3.12
43	98	7	3.11	2.35	2	5.46
46	74	4	8.94	2.43	2	11.37
47	44	7	5.30	2.05	2	7.35
83	104	4	3.90	4.38	2	8.28
88	101	4	3.23	4.30	2	7.53
98	59	4	4.51	4.35	2	8.86

UNITS = KIPS, KSI

(A-36 ALLOWABLE = 20.3 KSI)

HIGH CYCLE FATIGUE EVALUATION

MEMBER NO.	LOCATION	DESCRIPTION OF LOADING CASE **		MAX STRESS (KSI)
68	STEAM GENERATOR SUPPORT FRAME	THERMAL EXPANSION OF HOT LEG*	±0.01 IN DISPLACEMENT AT NODE 100 IN X DIRECTION	±1 28
133	RCP SUPPORT FRAME	RCP MOVEMENT UNDER OPERATING CONDITIONS	0.003 IN. DISPLACEMENT AT NODE 91 IN X DIRECTION	±0.25
169			0.003 IN. DISPLACEMENT AT NODE 91 IN Y DIRECTION	±0.37

* DUE TO ±3°F THERMAL TRANSIENT

** X & Y ARE GLOBAL COORDINATES OF THE STEAM GENERATOR & RCP SUPPORT FRAME COMPUTER MODEL

X IS ALONG HOT LEG

Y ⊥ X

NOTE:

HIGH CYCLE FATIGUE DESIGN (ARTICLE XVII - 3000 OF ASME III, SUBSECTION NA) FOR >2:000:000 CYCLES: ALLOWABLE STRESS IS ±6 KSI

4 ./fml 089

MR. CAVALLO: Good morning. I am Jon Cavallo, and I'm an engineer in the Power Division with Stone & Webster Engineering Corporation of Boston, Massachusetts, and I have been asked to make this portion of today's presentation which will be an overview of the factors considered and the techniques utilized in repair of the steam generator supports. During my portion of the presentation I will address the measures employed to prevent welding and welding-related defects, specifically restraints cracking and lamellar tearing.

As Mr. Proffitt indicated in his introduction, it was decided to remove and replace all of the welds in the support structures. The first step in development of this type of repair program was to examine available information relating to the repair effort to come. The information reviewed during this effort included a review of the types of defects found in the welds on the original structures, a review of data relating to the support base material, a review of germane technical literature, discussions with the original fabricator, other fabricators of heavy structures and industry specialists and a review of code and standards relating to the welding of heavy carbon steel components.

To provide for coordination of this information gathering process and to translate the information thus gained

1 into a useable repair program, a special task group was estab-
2 lished within Stone & Webster comprised of a number of
3 different specialists in various engineering disciplines.
4 This task group also monitored the repair efforts from
5 their inceptions to their completions.
6 After completion of the review phase, it was
7 determined that the types of defects to be considered in
8 development of the repair program included cold cracking,
9 which is also known as hydrogen-induced cracking, weld crack-
10 ing, lamellar tearing, which is known as decohesion cracking,
11 and such things as lack of fusion.
12 It was noted that the term restraint cracking
13 had been utilized. Actually this term refers to the oc-
14 currence of any of the types of weld cracking mechanisms
15 I have mentioned, which is initiated by restraint existing
16 in welds.
17 With prevention of these types of welding
18 defects in mind the repair programs were formulated for the
19 support structures for North Anna Units 1 and 2.
20 As I outline the repair program I will point out
21 the fabrication techniques that were selected to prevent oc-
22 currence of weld defects in the structures during the
23 repair efforts.
24 With the exception of small weld attach-
ments the support structures were not dismantled during
Reporters, Inc.
25 repair. Rather, portions of the weld on the structures

1 were removed and replaced thus providing satisfactory welds
2 while preserving the dimensional tolerances on the supports.
3 I have attempted to illustrate on this slide this
4 excavation process. This slide shows a weld detail, 30-
5 degree included angle double bevel weld, which is typical
6 of the welds as detailed by the original fabricator.
7 I have shown the general area of the weld in blue.
8 For the excavation and re-welding of the welds during repair,
9 first a specified excavation was made. You will note that
10 the included angle is approximately 45 degrees and the excava-
11 tion was dimensioned such that not only the original
12 weld root area was removed but also the adjacent
13 heat-affected zone from the original weld. This cavity was
14 then inspected as I will discuss a little later and re-
15 welded.
16 After completion of re-welding of this portion
17 of the excavation, the second side of the original double
18 bevel weld was excavated in the same manner with the overlap
19 at the root to insure good root penetration and re-welded
20 in the same manner.
21 As most of you are aware, the defects detected in the original welds on the support structures
22 were detected by the provisions of the on-site repair portion
23 of the overall quality assurance program at the North Anna
24 Power Station. However, the true extent and magnitude of the
Reporters, Inc.
25

m4

1 defects were not realized or known until after the Unit 1
2 steam generator or lower supports were installed in the
3 reactor containment structures and walls erected around them.
4 A review of the repair operations available for
5 repair of the structures indicated that the in-place repair
6 of the structures was the most advantageous solution.
7 Also because of this in-place repair, it was
8 determined that final stress relief by furnace and/or local
9 post-weld heat treatment was not desirable.
10 As an alternative, a comprehensive repair pro-
11 gram was developed to provide satisfactory welds and min-
12 imize residual welding stresses without the use of thermal
13 stress relieving techniques.
14 The major factors in the repair program for the
15 Unit 1 steam generator lower supports are shown on this slide.
16 These include an inspection of the excavation prior to re-
17 welding, control of welding pre-heat, buttering, weld bead
18 sequencing, weld joint sequencing, peening, welding filler
19 metal selection and control, post-heating of completed
20 welds, non-destructive examinations and verification of weld-
21 ing parameters.
22 Each excavation was examined visually and by the
23 magnetic particle method prior to re-welding. Welding pre-
24 heat was established at 250 degrees minimum over an area of
25 one foot on all sides of the excavation with a specified

temperature gradient decrease of 100 degrees per foot away from the pre-heated area. The purposes of the control of pre-heat is to reduce localized restraint stresses during and shortly after welding, to promote complete weld fusion to base metal, to allow hydrogen, which may have been trapped in the repaired weld, to diffuse. It provides for a slower weld cooling rate, which reduces the formation of martensite in the finished welds, which reduces the propensity for cold cracking.

Buttering weld passes were deposited on the sides of the weld grooves prior to re-welding. The result of the application of the buttering passes is that a transition is provided from the base metal to the weld metal so that weld shrinkage stresses are not applied directly to the base material.

This buttering reduces the possibility of the occurrence of the cracking especially lamellar tearing and/or restraint stress related problem.

Each detailed welding technique sheet prepared specifies the order in which the weld beads were to be deposited during repair weld. The aim of this bead sequencing is to reduce weld shrinking stresses, to further reduce weld cracking problems and to minimize the distortion of the weldment during and after repair.

The Stone & Webster welding engineer at the job site prepared written weld joint sequences for the structures

al Reporters, Inc.

to be repaired. The advantages of weld joint sequencing are that proper access for welding is provided which promotes generally better welding quality; the reduction of overall welding stresses is thereby gained; and also general dimensional distortion is minimized.

All weld layers except for root bases, buttering passes and cover passes were mechanically peened per specified parameters.

Prior to peening, each peening operator was instructed and tested by the Stone and Webster welding engineeer at the job site prior to being allowed to perform peening on the structures.

The peened welds were visually inspected and compared to samples of properly peened surfaces during the repair work.

The purposes of mechanical peening were to reduce weld restraining related cracking problems and to reduce dimensional distortion of the weldments during repair.

For repair welding the low hydrogen type E-7018 coated electrode and E-70T-1 type flux-cored arc welding wire in specified sizes were selected and utilized. These welding filler metals were selected with the aims in mind of elimination of cold cracking; for ease of weld ability in all positions; and sizes were specified such that root penetration and fusion to the base metal was assured.

1 It should be noted also that coated electrodes of the low
2 hydrogen type are sensitive to moisture absorption. When the
3 coated electrodes were removed from the shipping containers they
4 were placed in special holding ovens and each welder was issued a
5 small heated canister for holding his electrodes while he was
6 performing his welding work.
7 After completion of welding each weld was held at 250 to
8 350 degrees Fahrenheit for an additional 8 hours and then allowed
9 to cool slowly to ambient. This heat soak provides further
10 assurance that any hydrogen entrapped in the weld will diffuse
11 harmlessly and will not result in cold cracking.
12 Both the visual and magnetic particle inspection techniques
13 were specified for use in the in-process and for final inspection
14 of the Unit 1 steam generator lower supports. The repair inspection
15 techniques were chosen to preclude the possibility of lamellar tearing,
16 or decohesion cracking as it is also known.
17 As a further check on the effectiveness of these
18 preventative measures, ultrasonic examination was performed on
19 selected welds after completion of the repair work to the Unit 1
20 steam generator supports. The selection of the welds to be
21 examined was made on the basis of weld joint configurations most
22 susceptible to lamellar tearing, and include high stress areas on
23 the support.
24 Mr. Perkins, who will present the next portion of today's
25 presentation, will give the details concering the nondestructive
test techniques employed and the results of these examination."
After these techniques were

1 formed into procedures, procedure verification tests were
2 performed in which we used welding filler metals and mater-
3 ials representative of the types and thicknesses that would
4 be used in the repair of the support structures. The samples
5 prepared were analyzed by tensile tests, bend tests, hard-
6 ness tests and photomicrosopy, and modifications were made to
7 the welding techniques as necessary.

8 However, these tests did not fully duplicate the restraint
9 conditions needed to produce lamellar tearing if it were
10 to occur. As a check after completion of the repair to
11 a representative portion of the Unit 1 support structures a
12 UT examination designed to detect lamellar tearing was per-
13 formed. As we expected there was no indication of lamellar
14 tearing.

15 The Unit 2 steam generator lower supports and
16 Units 1 and 2 reactor coolant pump supports were removed
17 from the North Anna job site for repair and repaired by
18 Combustion Engineering, Inc., at its Chattanooga facility
19 and by the J.A. Jones Construction facility at the Surry job
20 site.

21 Since shops were available for the repair work
22 furnace post-weld heat treatment was utilized. As you
23 will see from this transparency, with the one addition of
24 furnace post-weld heat treatment after completion of the
25 structural repair work, the major techniques employed were

ral Reporters, Inc.

1 the same as those used on the Unit 1 steam generator lower
2 supports. Specifically the MT and visual inspections of ex-
3 cavation, control parameters for welding pre-heat,use of
4 buttering, weld bead sequencing, weld joint sequencing
5 weld filler metal control post-heating was completed
6 welds, furnace post-weld heat treatment, non-destructive
7 examination and verification testing of the welding parameters
8 selected.
9 In summary, I would like to leave you with two
10 thoughts. First, as you have seen, the fabrication tech-
11 niques used in the repair work are neither new nor are they
12 novel. The repair program consists of a carefully formu-
13 lated composite of industry proven and accepted methods
14 to perform an overall workable repair plan.
15 Perhaps, as important to me the repair program
16 and any repair program of this magnitude is only as good
17 as the personnel who participate in it. From upper man-
18 agement down to the individual welder. I'm privileged to
19 have worked with such a team and such a program and I sin-
20 cerely believe that the success of the repair program can
21 be directly attributable in no small part to the integrity
22 and dedication of the personnel who worked on it.
23 I would like to introduce Jim Perkins, the
24 director of quality assurance, Virginia Electric & Power
25 Company, who will make the next presentation.
(Documents follow.)

UNIT 1 STEAM GENERATOR LOWER SUPPORTS - REPAIR PROGRAM REQUIREMENTS

1. EACH WELDING GROOVE VISUALLY AND MAGNETIC PARTICLE EXAMINED PRIOR TO REWELDING

2. WELDING PREHEAT CAREFULLY CONTROLLED - 250 F MINIMUM TEMPERATURE ONE FOOT ON ALL SIDES OF WELDING GROOVE, MAXIMUM TEMPERATURE GRADIENT OUTSIDE OF PREHEATED AREA OF 100 F PER FOOT

3. BUTTERING WELD PASSES DEPOSITED ON WELD GROOVE SIDES PRIOR TO WELD FILL

4. WELD BEAD DEPOSITION SEQUENCE SPECIFIED IN INDIVIDUAL WELDING TECHNIQUE SHEETS

5. WELD JOINT SEQUENCES PREPARED FOR EACH SUPPORT REPAIR AREA BY WELDING ENGINEERS AT JOBSITE PRIOR TO COMMENCEMENT OF WELD EXCAVATION

6. USE OF CONTROLLED MECHANICAL PEENING OF INTERMEDIATE WELDING LAYERS

7. SELECTION AND SPECIFICATION OF WELDING FILLER METAL AND IMPLEMENTATION OF CONTROL REQUIREMENTS

8. POST-HEATING OF COMPLETED WELDS AT 250 F TO 350 F FOR EIGHT HOURS MINIMUM AFTER WELDING

9. NONDESTRUCTIVE EXAMINATION OF WELDS BY VISUAL, MAGNETIC PARTICLE AND ULTRASONIC TESTING TECHNIQUES

). VERIFICATION OF WELDING TECHNIQUES SELECTED BY PREPARATION AND EXAMINATION OF WELDED SAMPLES

UNIT 2 STEAM GENERATOR LOWER SUPPORTS AND UNITS 1 AND 2 REACTOR COOLANT PUMP SUPPORTS - REPAIR PROGRAM REQUIREMENTS

1. EACH WELDING GROOVE VISUALLY AND MAGNETIC PARTICLE EXAMINED PRIOR TO REWELDING

2. WELDING PREHEAT CAREFULLY CONTROLLED - 250 F MINIMUM TEMPERATURE ONE FOOT ON ALL SIDES OF WELDING GROOVE, MAXIMUM TEMPERATURE GRADIENT OUTSIDE OF PREHEATED AREA OF 100 F PER FOOT

3. BUTTERING WELD PASSES DEPOSITED ON WELD GROOVE SIDES PRIOR TO WELD FILL

4. WELD BEAD DEPOSITION SEQUENCE SPECIFIED IN INDIVIDUAL WELDING TECHNIQUE SHEETS

5. WELD JOINT SEQUENCES PREPARED FOR EACH SUPPORT REPAIR AREA BY WELDING ENGINEERS AT REPAIR FACILITIES PRIOR TO COMMENCEMENT OF WELD EXCAVATION

6. SELECTION AND SPECIFICATION OF WELDING FILLER METAL, AND IMPLEMENTATION OF CONTROL REQUIREMENTS

7. POST - HEATING OF COMPLETED WELDS AT 250 F TO 350 F FOR EIGHT HOURS MINIMUM AFTER WELDING

8. FURNACE POST - WELD HEAT TREATMENT OF COMPLETED STRUCTURES

9. NONDESTRUCTIVE EXAMINATION OF WELDS BY VISUAL, MAGNETIC PARTICLE AND ULTRASONIC TESTING TECHNIQUES

10. VERIFICATION OF WELDING TECHNIQUES SELECTED BY PREPARATION AND EXAMINATION OF WELDED SAMPLES

REPAIR EXCAVATION

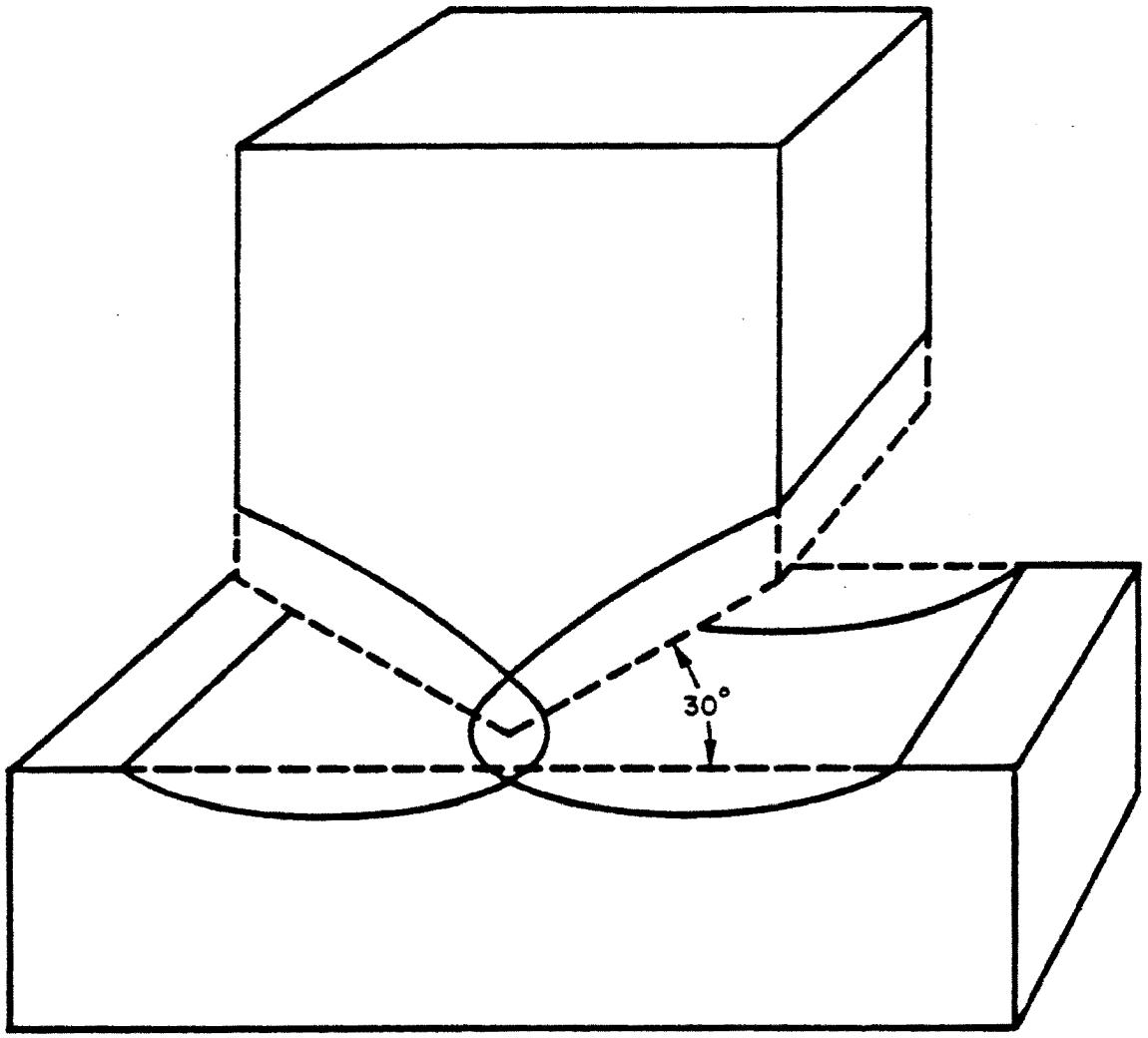

UNIT 1

STEAM GENERATOR LOWER SUPPORTS - REPAIR PROGRAM REQUIREMENTS

INSPECTION OF EXCAVATION
CONTROL OF WELDING PREHEAT
BUTTERING
WELD BEAD SEQUENCING
WELD JOINT SEQUENCING
PEENING
WELDING FILLER METAL SELECTION AND CONTROL
POST-HEATING OF COMPLETED WELDS
NONDESTRUCTIVE EXAMINATIONS
VERIFICATION OF WELDING PARAMETERS

76-6271

UNIT 2
STEAM GENERATOR LOWER SUPPORTS & UNITS 1 & 2 REACTOR COOLANT PUMP SUPPORTS - REPAIR PROGRAM REQUIREMENTS

- INSPECTION OF EXCAVATION
- CONTROL OF WELDING PREHEAT
- BUTTERING
- WELD BEAD SEQUENCING
- WELD JOINT SEQUENCING
- WELDING FILLER METAL SELECTION AND CONTROL
- POST-HEATING OF COMPLETED WELDS
- FURNACE POST-WELD HEAT TREATMENT OF COMPLETED STRUCTURES
- NONDESTRUCTIVE EXAMINATIONS
- VERIFICATION OF WELDING PARAMETERS

76-6272

MR. PERKINS: I am director of quality assurance for the Virginia Electric and Power Company. I will discuss the quality assurance program for repair of the steam generator and reactor coolant pump supports.

After the decision was made that it would be necessary to remove and replace all the defective welds in these supports, it was obvious that a comprehensive quality assurance program would be required to insure that upon completion the new welds would be acceptable in all respects.

The first step necessary was to have a clear understanding of the requirements to be imposed during the repair operations.

Several meetings were held with our engineers, Stone and Webster, to discuss the repair specification in light of the information available. It had been established the the cause of the defective welds was a result of poor quality workmanship during initial fabrication. Also, it was known that the fabricator had reported that it experienced lamellar tearing during the initial fabrication and, as a consequence, had to alter its fabrication techniques to overcome this problem.

We knew also that another fabricator had successfully manufactured an identical set of these supports for another project. We met with this fabricator and discussed his fabrication techniques. Thus, our quality control program was established to provide assurance that these essential elements would be

1 controlled.

2 (a) Welding techniques.

3 (b) Preheat temperatures would be maintained.

4 (c) Welding electrodes would be rigidly controlled

5 as to sizes employed and temperature maintenance.

6 (d) Non-destructive examinations by the magnetic

7 particle method would be rigorously carried out during the repair

8 cycle.

9 (e) Weld "buttering" techniques would be employed to

10 prevent the occurrence of lamellar tearing.

11 (f) Removal and replacement of existing welds would

12 be sequenced to minimize induced stresses during the repair.

13 (g) Selected welds would be subjected to a volumetric

14 examination by the ultrasonic method after completion of all

15 repairs.

16 We participated in the repair specification review

17 to insure that the above essentials were adequately dealt with.

18 Also, we asked our consultants, Southwest Research Institute,

19 to review and comment on these procedures. After resolution

20 of all comments, the repair specification was issued.

21 The decision was made to repair Unit 1 Steam Genera-

22 tor Supports at the North Anna site and Unit 2 offsite because

23 of schedular requirements.

24 Combustion Engineering, Incorporated, Chattanooga,

25 Tennessee, was selected to perform the repairs on Unit 2 steam

1 generator supports and Units 1 and 2 reactor coolant pump
2 supports. However, because of financial restraints imposed
3 during the summer of 1974, it was necessary to curtail the work
4 being performed by Combustion Engineering and move the steam
5 generator supports to our Surry, Units 3 and 4, construction
6 site for completion.
7 Combustion Engineering had completed approximately
8 25 percent of the repair effort on the steam generator supports
9 at this time and subsequently completed the Unit 1 reactor
10 coolant pump support. The Unit 2 steam generator and reactor
11 coolant pump supports were completed at the Surry construction
12 site by the J. A. Jones Construction Company under VEPCO super-
13 vision.
14 We, through Stone and Webster, already had an
15 ongoing construction quality control program in effect at North
16 Anna. Therefore, it became a matter of applying this
17 program to the repair effort to be carried out by Stone and
18 Webster construction forces.
19 For the repair work on Unit 2 which was performed
20 by Combustion Engineering and subsequently completed by J. A.
21 Jones Construction Company, each submitted for our review and
22 approval a detailed quality assurance plan to control the work
23 activity of this organizations. These plans included an
24 identification system in order that each weld could be identi-
25 fied, so accurate historical data pertaining to individual

1 welds could be accumulated.

2 The quality assurance programs implemented during
3 those repairs were in conformance with the applicable sections
4 of Appendix B, 10CFR 50, and covered such items as qualifica-
5 tion of personnel, review and vertification of specifications
6 and procedures, written work instructions, in-process and
7 final inspection of work, control of materials and special
8 processes, audits and documentation of results.

9 The following inspections were carried out during
10 the repair cycle, as noted in Sketch 1.

11 Visual inspection method was utilized before
12 welding, during and after welding. Surfaces and edges of
13 excavations were verified to be smooth, uniform, free from
14 fins, tears, cracks and other defects. Each pass of weld
15 metal and all welds were examined.

16 The magnetic particle method was utilized. Before
17 welding, all excavations were examined by MT. Also the,
18 initial weld layer to base metal and each subsequent one-half
19 inch of weld thickness or 1/4, 1/2, or 3/4 of weld thickness,
20 whichever was more restrictive was examined by MT.

21 The magnetic particle examination was performed after
22 completion of welding. It was performed again after an eight-
23 hour, 250 degree minimum preheat temperature soak. It was
24 performed again 72 hours after an 8-hour preheat temperature
25 soak. On Unit 2, after completion of welding, MT was performed
and again 24 hours after PWHT.

1 The following inspection acceptance criteria were
2 used.
3 Visual inspection acceptance criteria. During
4 welding: no overlap; no undercut exceeding 1/32 inch; concavity
5 of fillets shall not exceed 3/32 inch as measured from edge
6 of the weld.
7 After welding: The above three criteria; reinforce-
8 ment of groove shall be held to minimum but shall not exceed
9 1/8 inch; weld craters shall be filled to full cross-section
10 of the weld; weld spatter removed; arc strikes in excess of
11 1/16 inch were repaired.
12 Magnetic particle acceptance standards: Cracks
13 and/or linear indications are rejectable. Rounded indications
14 with dimensions greater than 3/16 inch are rejectable. Four
15 or more rounded indications in a line separated by 1/16 inch
16 or less edge to edge are rejectable. Ten or more rounded
17 indications in any 6 square inch of surface area, with the major
18 dimension of this area not to exceed six inches, are rejectable.
19 MT method used was direct current, dry powder, prods.
20 Ultrasonic examination acceptance standards. Linear
21 type discontinuities are unacceptable if the amplitude exceeds
22 20 percent Distance Amplitude Correction for subsurface dis-
23 continuities and 10 percent DAC for discontinuities open to the
24 surface, and have lengths which exceed the following: 1/2 inch
25 for (t) up to 3/4 inch; 1/3 (t) for (t) from 3/4 to 2-1/4 inch;

1 3/4 inch for (t) over 2-1/4 inch, where (t) is the thickness of
2 the weld being examined.
3 If the weld joins two members having different
4 thicknesses at the weld, (t) is the thinner of the two thick-
5 nesses.
6 Where discontinuities can be interpreted to be
7 cracks, lack of fusion, or incomplete penetration, they are
8 unacceptable regardless of length.
9 All of the preceding non-destructive tests were
10 carried out in accordance with written procedures and the
11 inspection results carefully documented.
12 In addition to the normal construction quality
13 control programs implemented during these repairs, regular
14 audits were carried out by VEPCO quality control personnel to
15 verify that the approved procedures were being followed. 73
16 such audits were conducted, and the results confirmed acceptable
17 quality programs were being carried out.
18 To augment this program, we retained Southwest
19 Research Institute to provide an independent overview of the
20 repair effort. They reviewed every aspect of the program from
21 specification review through process controls and witnessing
22 non-destructive examinations.
23 In summary, three separate levels of quality control
24 were imposed during the repair of those supports, the constructo
Reporters, Inc.
25 VEPCO, and Southwest Research Institute. Also, the NRC Region I

1 inspectors reviewed the implementation of our quality program on
2 a regular basis throughout the repair cycle, and, to our
3 knowledge, they have had no adverse comments.
4 We believe that from a quality assurance aspect the
5 necessary controls were exercised over the repair effort. The
6 repairs were carried out in accordance with the established
7 procedures, and the necessary documentation is on file to verify
8 the results of the quality assurance program.
9 Results of the non-destructive examinations of the
10 repair welds.
11 Magnetic particle testing. As we mentioned previously,
12 examination by the magnetic particle method served as the primary
13 weld process control. All defects exceeding the prescribed
14 acceptance standards were removed, weld repaired and reinspected.
15 These operations were carried out in accordance with approved
16 repair procedures, and the same degree of control that was
17 imposed on the original weld was used during repairs.
18 As a general statement, the frequency of defects
19 discovered was not considered unusual for this type of welded
20 structure, and all were repaired to conform to the acceptance
21 standards.
22 Sketch 2 shows the extent of MT examination on a
23 typical weld.
24 The excavation represented here shows the surface
25 that was examined by MT before any welding was performed to
verify the absence of

1 defects that may be occurring on this surface. The buttering
2 layer, after it was installed, received another MT. Also the
3 initial layer plus each half-inch increment to the finish of
4 the weld received MT examination.
5 This, of course, I would like to emphasize. This
6 represents one half of one weld. This side over here when
7 it was done received the same treatment.
8 If you do arithmetic, we estimate 2,700 welds on
9 each steam generator support. And to give you an idea of the
10 numbers you come up with, if you take two times 2,700, you come
11 up with 5,400 welds, and approximately 5 MT examinations for
12 each weld gives us 27,000 MT examinations per support, times
13 six supports, and you get 162,000 individual magnetic particle
14 tests. That, in my opinion, is a conservative estimate.
15 Ultrasonic examination of welds. Since the fabri-
16 cator had reported that it had experienced lamellar tearing
17 during the original manufacture of those supports, we found it
18 necessary to demonstrate two things; i.e., that the repair
19 procedures utilized would not induce this phenomenon and,
20 secondly, when all repairs were complete, that the structures were
21 free from lamellar tearing.
22 A review of the non-destructive techniques available
23 to detect such subsurface defects as lamellar tearing pointed
24 immediately to the ultrasonic method as being the only viable
25 one. An ultrasonic examination procedure was developed in

1 conjunction with Stone and Webster and Southwest Research
2 Institute specifically for this purpose.
3 Also, it was decided that if lamellar tearing was
4 going to be a significant problem, it would show up first and
5 be the worst in the base metal adjacent to the high stressed
6 or restrained member weld joints. Therefore, those were
7 selected for examination to verify the absence of lamellar
8 tearing.
9 Sketch 2A shows the location of those weld joints.
10 You have seen this sketch so many times, you probably
11 have it engraved in your memory now.
12 Top zone, Zone 1; the main members welds in this area
13 were examined. The numbers are over here.
14 The center zone; we got the main member joints
15 down inside at this level.
16 And the Zone 3, main member welds here and here and
17 on the other side, same type of treatment was given on each
18 side to come up with 56 main member welds which were examined
19 in total.
20 These weld joints and adjacent base metal were
21 examined using 45- 60-and 70-degree shear wave search units and
22 straight beam search units where possible.
23 Sketches 3 and 4 show typical scan patterns used in
24 manipulating the UT search units or transducers. These
Reporters, Inc.
25 sketches came out of our ultrasonic test procedure.

1 This demonstrates a straight beam technique search
2 pattern which, of course, would readily pick up any lamellar
3 tearing that had occurred. This shows the angle beam, shear
4 wave. This demonstrates the manipulation of the search unit
5 across the back of the weld and shows how sound waves, can
6 cover this type of weld.
7 This sketch indicates the areas of concern for
8 lamellar tears. This shows a search pattern where you scrub
9 the transducer to search the area of concern.
10 As a result of this examination, reflectors or
11 indications were found which were considered reportable by the UT
12 specification requirements and required evaluation by Stone and
13 Webster, because the UT specification was designed to provide
14 a level of scanning sensitivity which would detect all weld
15 discontinuities considered to be related to weld quality.
16 Unit 1 results. The UT examination of these welds
17 revealed no indications of lamellar tearing. Further, no
18 indications were recorded which exhibited characteristics
19 normally associated with cracks in welds. In addition, in-
20 process visual and magnetic particle examinations were performed
21 during welding to detect lack of penetration.
22 Based upon visual and magnetic particle examination
23 results of these weld layers, which is documented, there is
24 assurance that lack of penetration is not a major factor to be
25 considered in the evaluation of ultrasonic reflectors.

1 Some of the indications reported required further
2 investigation and additional UT examination in order to further
3 characterize the nature of the indication. This investigation
4 confirmed that the indications recorded during the initial UT
5 were not planar in nature and were determined to be typical slag
6 stringers and localized slag inclusions, which are not unexpected
7 for multi-pass manual metallic arc welds.
8 Unit 2 results. UT examination of the main member
9 high stressed welds revealed no indications of lamellar tearing,
10 nor indications normally associated with cracks in welds.
11 However, three of the examined welds contained reflectors which
12 appeared to have planar characteristics.
13 These were excavated and the reflectors were
14 determined to be a combination of weld porosity and slag
15 pockets with defects associated with them. These were weld
16 metal defects as opposed to base metal defects. The actual
17 defects were not of the magnitude as indicated by the ultra-
18 sonic reflectors. These were removed, weld repaired, re-
19 examined and determined to be acceptable.
20 To summarize, the non-destructive test programs
21 which were implemented during the course of the weld repairs
22 to these supports were in accordance with the specification
23 requirements and provide adequate assurance that these structures
24 are sound and will perform their intended function.
Reporters, Inc.
25 Additional non-destructive tests of welds. After

ch 12

1 all of our inspection work was completed on Unit 1 and still in
2 progress on Unit 2, an additional inspection was conducted by
3 Sun Ship, who elected to perform non-destructive and destructive
4 tests of the repair welds. They examined a number of welds by
5 the ultrasonic method on Unit 1 supports and chose to perform
6 examination by the magnetic particle method on the Unit 2
7 supports.

8 We, of course, were very much interested in what their
9 findings might be. Because of the pending litigation, it was
10 decided that we should have a record of Sun's UT examinations,
11 and to this end we retained Southwest Research Institute to wit-
12 ness Sun's UT and to record on videotape with a split screen --
13 one camera on the transducer and one on the CRT -- the actual
14 inspections.

15 Southwest Research Institute's conclusions as to Sun's
16 UT examination are as follows: Conclusions: The Sun Ship
17 ultrasonic examinations were performed with incorrectly cali-
18 brated equipment and not in accordance with their written
19 procedure. The procedure, as written, applies to ship hull
20 welds and not necessarily to nuclear plant structural welds.
21 Excessive sensitivity of the Sun Ship instrument calibration
22 caused incorrect indications of weld conditions to be shown.

23 Therefore, we can give no credence to Sun's purported
24 findings of defects. However, during Sun's examination, which
25 was witnessed by a VEPCO non-destructive test expert along with

1 Southwest Research Institute, certain welds, eight, displayed
2 reflectors that, in their opinion, should be investigated
3 further. Southwest Research Institute, using their equipment
4 and procedures, reinspected those eight welds and defined their
5 characteristics. This report was reviewed by Stone and Webster
6 and these reflectors evaluated as required by the UT specifica-
7 tion.
8 One of the welds, W-15, from the Cubicle "C"
9 support was the same one previously examined and reported by
10 Stone and Webster. Additional ultrasonic inspection of these
11 welds was performed by Southwest Research Institute to further
12 characterize the nature and location of the reflectors in order
13 that Stone and Webster could complete their evaluation. All
14 were determined to be non-planar and acceptable.
15 Magnetic particle examination by Sun Ship. Sun Ship
16 elected to examine one of the Unit 2 supports by the magnetic
17 particle method. This operation was witnessed by a VEPCO
18 non-destructive test expert, and we have determined that indi-
19 cations recorded by Sun personnel were not relevant. We quote
20 from the ASME Boiler and Pressure Vessel Code, Section VIII,
21 Appendix VI, Magnetic Particle Examination, MT, paragraph
22 UA-72.
23 "Discontinuities and defects will be indicated by
24 retention of the magnetic particles. All such indications are
25 not necessarily defects, however, since excessive surface

1 roughness, magnetic permeability variations, such as at the edge
2 of heat affected zones, et cetera, may produce similar indica-
3 tions. If indications are believed to be non-relevant, each
4 type of indication shall be explored to determine if relevant
5 linear discontinuities are present."
6 In order to satisfy ourselves that indications
7 recorded by Sun were in fact not relevant, a reexamination by
8 the MT method was performed on 119 individual welds, and a
9 visual examination was made of all welds. These reexaminations
10 were witnessed by our MT Contractor Level III expert, VEPCO
11 NDT Level III expert, and Southwest Research Institute Level
12 III expert.
13 On all welds examined, except four, the indications
14 were determined to be non-relevant. Of the four weld joints,
15 one had two parallel linear indications which were removed by
16 slight grinding, two were slag pockets, and one was an unaccept-
17 able weld undercut conditions. All of these conditions were
18 corrected and made acceptable.
19 In conclusion, we are confident these repairs have
20 been completed using carefully thought out and approved welding
21 and non-destructive testing procedures and carried out under
22 a closely controlled quality assurance program. We are confi-
23 dent that the welds are sound and the structures will perform
24 their intended design function.
Reporters, Inc.
25 I would like to introduce Joe McAvoy, staff

1 engineer of VEPCO, to discuss core sampling of Sun Ship.

nd 5 2 (The document follows:)

3

4

5

6

7

8

9

10

11

12

13

14

15

16

17

18

19

20

21

22

23

24

25

Sketch 1

Method	Inspections Carried Out During Repair Cycle: Prior to Welding	During Welding	After Welding		Remarks	
Visual	X	X	X	(1)	Surfaces and edges of excavations were verified, to be smooth, uniform, free from fins, tears, cracks and other defects.	
				(2)	Each pass of weld metal visually examined	
				(3)	All welds were examined.	
Magnetic Particle (MT)	X	X	X	(4)	Excavations examined by MT before welding.	
				(5)	Initial weld layer to base metal and each subsequent ½" of weld thickness or ¼, ½, or 3/4 of weld thickness whichever was more restrictive.	
				(6)	After completion of welding After 8 hour preheat temp soak 72 hours after the 8 hour soak	Unit 1
					After completion of welding 24 hours after PWHT	Unit 2
Ultrasonic (UT)			X	(7)	Ultrasonic examination of selected high stressed main member welds.	

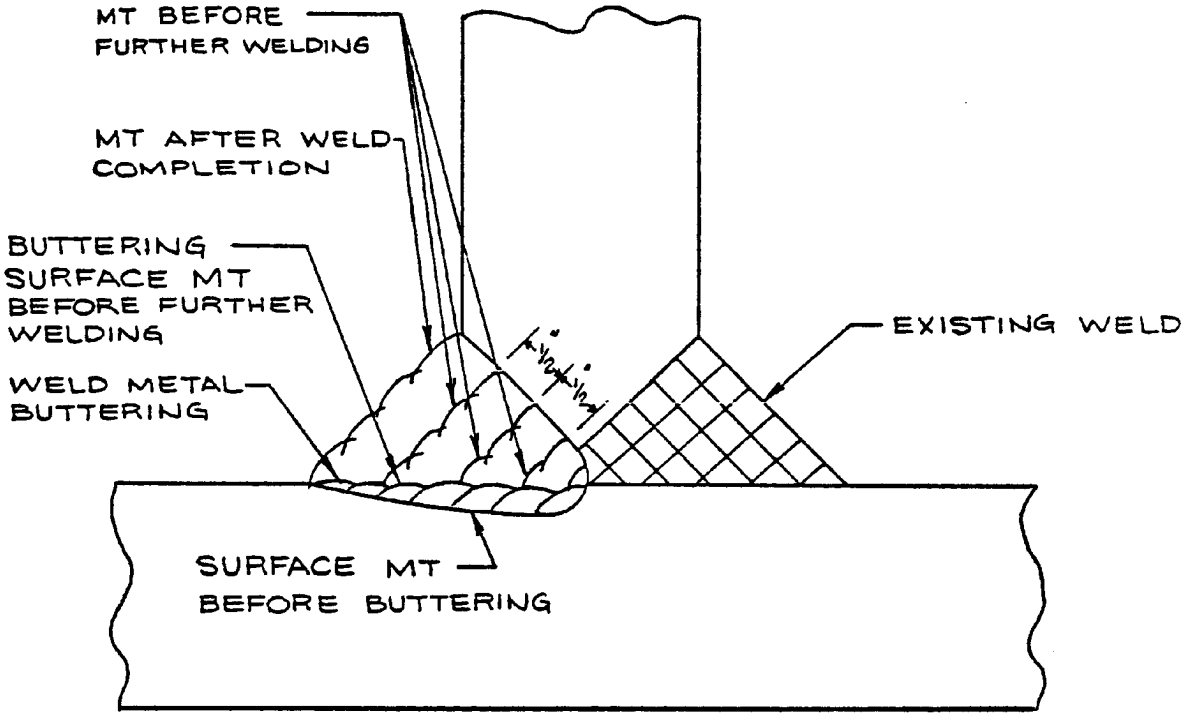

TYPICAL SKETCH SHOWING EXTENT OF MAGNETIC PARTICLE EXAMINATION

SKETCH #2

'AIF LD RAS CAL
EXAMINED ON THE UNITS 1 STEAM GENERATOR SUPPORTS

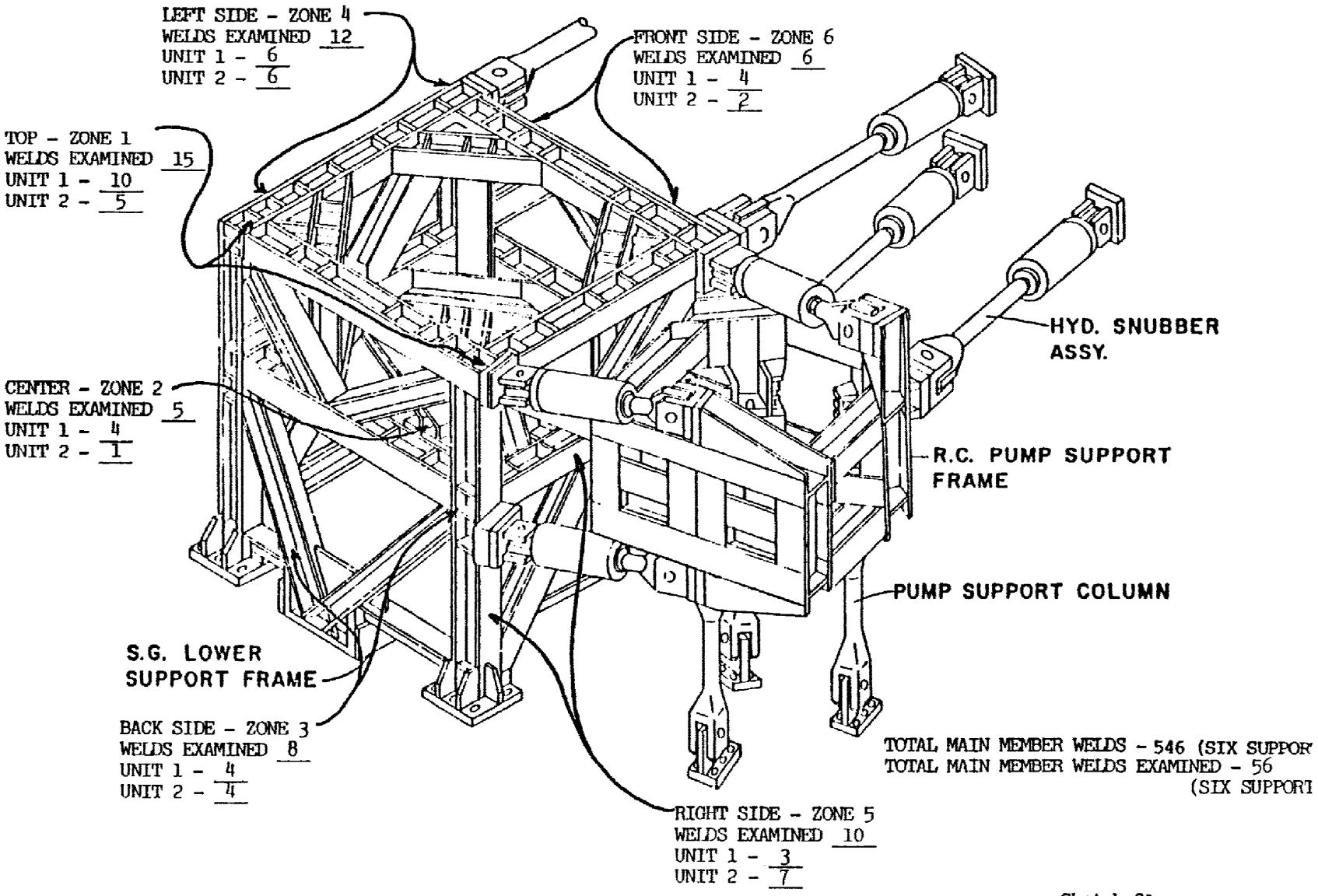

Sketch 2A

ATTACHMENT 3.7B

TYPICAL SCAN PATTERNS (WELDMENTS)

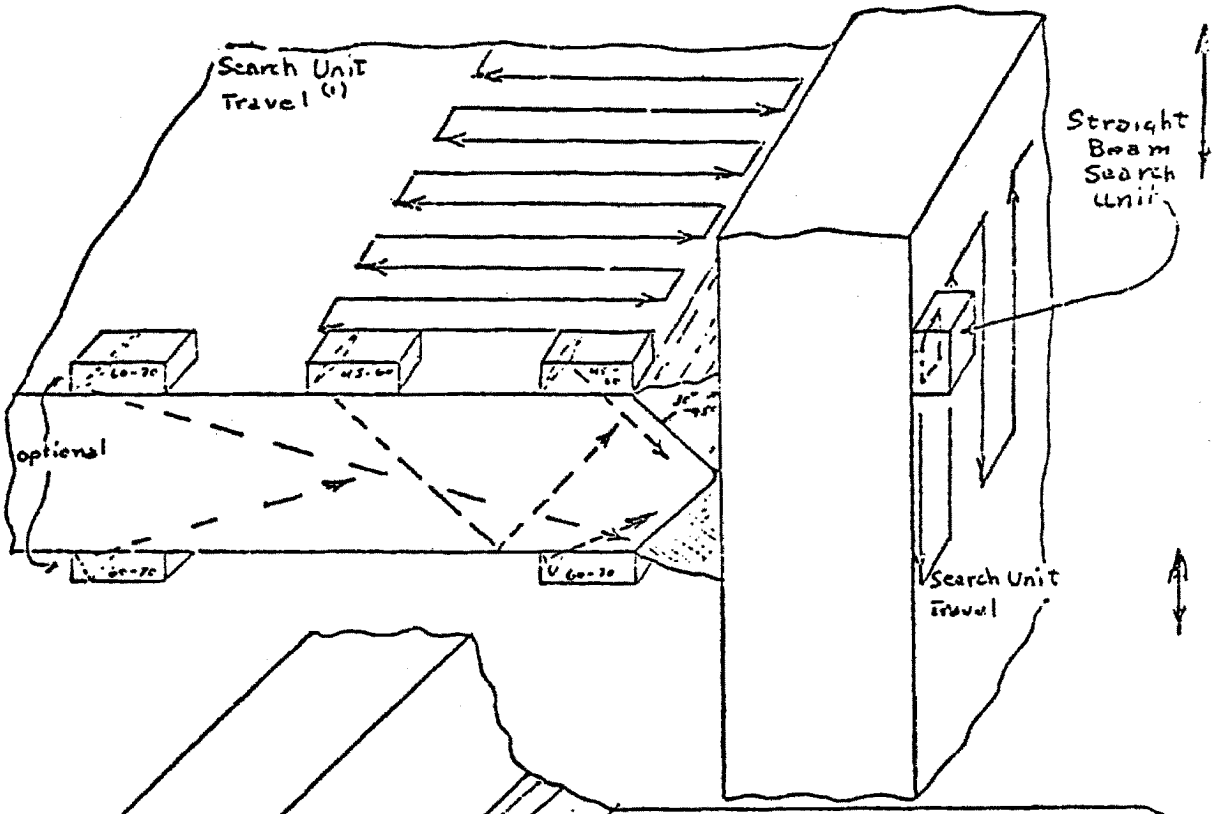

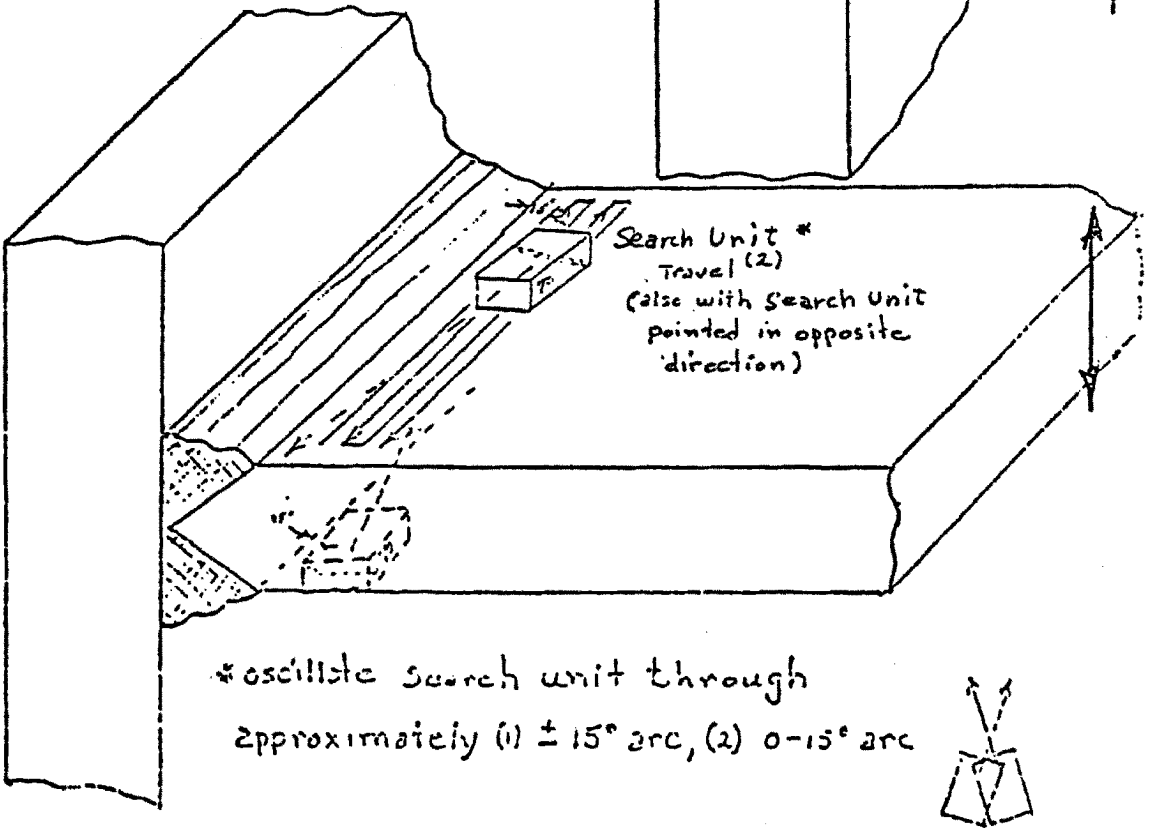

*oscillate search unit through approximately (1) ± 15° arc, (2) 0-15° arc

ATTACHMENT 3.7 F

TYPICAL SCAN PATTERNS (WELDMENTS)

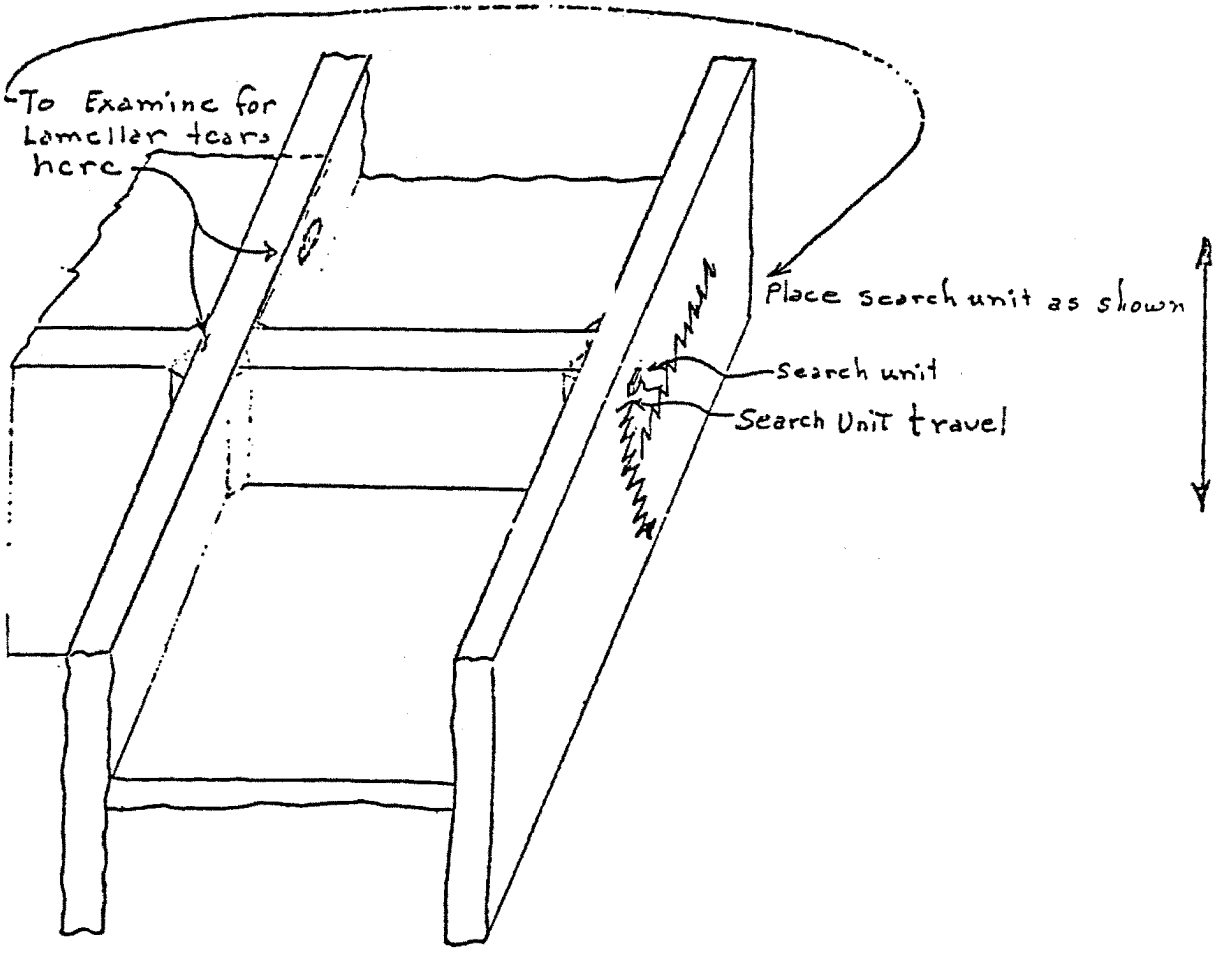

annt
R8 89
.K:

MR. MC AVOY: I will show you what a core sample is at the beginning. I hasten to add, this particular core sample was not removed from a VEPCO repair weld, but it's typical of the appearance of a core sample. It's two and a half inches long, cylindrical and an inch in diameter.

What Sun Ship did with the core samples removed from welds we were repairing at that time, was to cut the core samples and prepare them metallographically, and take certain micrographs of the prepared samples.

I have reviewed the 13 core samples removed by Sun Ship from Cubicle A and Cubicle B of the North Anna Unit-2 steam generator support structures.

My review has been in conjunction with the review performed by VEPCO consultant Dr. Robert Stout, of Lehigh University, and the views presented here are mine and those of Dr. Stout.

Before a discussion of our interpretation of the significance of the Sun Ship core sampling, it is necessary to put the entire core sampling program into proper perspective.

Sun Ship has supplied the Commission with a document identified as "SS-3" entitled "Examination of Core Samples from Repaired Unit-2 Steam Generator Supports." In this document, Sun Ship has presented a rather one-sided picture of their core sampling program as well as the significance of defects found in the core samples.

ann2

It is VEPCO's position that the following significant points should be stated:

1. Sun Ship was allowed to remove up to 10 core samples from each available Unit-2 steam generator support or cubicle after post weld heat treatment, but prior to final inspection and repair.

Cubicles A and B were available to Sun Ship; Cubicle C had been repaired and was near completion, so no core samples were taken from this cubicle.

2. Sun Ship set both the number of core samples to be taken (10 per cubicle), and the conditions of sampling - that being Sun would have the option to take core samples from welds showing defects during the VEPCO inspection, which did not clear after being excavated to 1/4" depth.

Sun later requested that VEPCO also agree to allow Sun to remove core samples from the surface of unground welds, and VEPCO agreed.

3. VEPCO was allowed by the Court to refuse a core sample location in a weld only where excessive damage would be done to the structure in removing the core. Examples of this are where other unrelated welds would be damaged, or where plates, beams, etc., would require removal.

VEPCO refused only 5 locations requested by Sun Ship during the entire core sampling period. Sun Ship did not contest VEPCO's refusal of any of these locations.

ann3

1 4. Sun Ship has stated that they "were not
2 permitted to take core samples from the base material of the
3 flanges..." Concerning this position, VEPCO notes that most
4 core samples show some base metal, with some samples being
5 almost entirely base metal. The base metal in these samples,
6 in fact, was from the associated flanges, gussets, and webs.
7 5. Sun Ship was shown over 230 welds which met
8 their criteria for evaluation to determine whether core
9 samples were, or were not, to be taken. These welds required
10 repair by the VEPCO criteria.
11 At the time Sun Ship began to core sample welds in
12 the supports, a total of 1794 welds remained to be inspected
13 and cleared in Cubicles A and B. Sun, therefore, was
14 presented with a reasonable percentage of welds from which
15 to take core samples.
16 Although Sun was permitted to take a total of 20
17 core samples, they took only 13, officially declining to core
18 sample welds with indications over 210 times. It is obvious
19 to VEPCO that for matters related to the VEPCO vs. Sun Ship
20 litigation, Sun Ship was attempting by core sampling, to
21 establish the existance of numerous defects of a specific
22 type which would best support their legal position.
23 Gentlemen, it's obvious to VEPCO that this
24 particular type of defect was lamellar tearing.
Reporters, Inc.
25 Let's look at the evaluation of defects found in

core samples of welds with known defects which were in the process of being repaired.

I will list the basic defect type and then the number of core samples that we saw defects in. No defects, number of core samples, 4. A developed lamellar tear with known lower bound dimensions of one inch by one inch, one sample.

A small lamellar tear, 0.2 inches, maximum dimension, one sample.

Weld defects typical, including slag, porosity, lack of fusion, weld tears, weld cracks, 6 samples. Small base metal tears of unspecified type, the maximum of which was 0.25 inches in length we found in one sample.

VEPCO's interpretation of the defects is presented in booklet form, which I will present to the NRC at the conclusion of this meeting. This is the booklet. These are copies of the photo micrographs taken by Sun's consultant.

We have listed not only the defects, but we have listed our conclusions as to what the defect is. We have indicated the present status of the weld and weld number.

We would like to summarize in our opinion what the significance of Sun Ship's core sampling program is. What has Sun Ship shown or proven. What do we know about our structures as a result of it.

There are 3 summary points to be made.

1. Welds which were inspected by VEPCO and found to have weld defects necessitating repair were shown to have weld defects by metallography.

Conclusion: In effect, the cores chosen by Sun Ship confirmed the fact that VEPCO was justified in repairing welds with rejectable defects.

2. Several core samples (perhaps 4) were found to contain some indication of common weld zone cracking or tearing (confined for the most part to the weld metal.) These samples also exhibited typical weld defects such as slag, porosity, and some lack of weld fusion. After post weld treatment, such defects were found and repaired employing typical inspect and repair procedures.

Conclusion: A small percentage of the total welds showed typical weld defects such as slag, porosity and lack of fusion. Occasionally, some associated weld cracking or tearing, a condition not uncommon to encounter when welding large structures, was also found. Such defects, normally rather small, were found through inspection and repaired in the normal course of repairing the welds after post-weld heat treatment. We now feel confident that the defects have been successfully repaired as verified by our inspection procedures.

3. In the core samples lamellar tears, or decohesion cracks, were found to be a rare defect type. Of approximately 230 welds offered to, we assume, knowledgeable Sun Ship observers, only

1 one weld was core sampled which showed a developed lamellar
2 tear, developed meaning about 1" by 1". This defect had been
3 found in the course of investigating weld defects utilizing
4 typical inspection procedures, and the defect was being
5 repaired when the Sun Ship core sample was taken.
6 In addition, one small separation approximately
7 0.2" in length was observed in another sample. This defect
8 did not represent a well-developed or significant lamellar
9 tear.
10 A third sample shows two small base metal separations,
11 each less than 0.25" in length, which cannot be precisely
12 characterized, but which do not appear lamellar in nature.
13 These defects are not of critical size.
14 Conclusion: It is the opinion of VEPCO that the
15 structures as repaired do not contain lamellar tears of
16 significance to service performance. In fact, no lamellar
17 tears of any size have been found in the repaired structure
18 utilizing the UT inspection program which was developed, as
19 stated earlier, specifically to detect lamellar tearing.
20 Also, Sun Ship's tenacity in searching for such
21 defects, in joints with known defects, and finding so few
22 verifies our position in this matter.
23 That concludes my presentation.
24 I will turn the presentation to Dr. Robert Stout
25 of Lehigh University, for a general overview of the repair

ann7

of the structures from the point of view of brittle fracture.

(The document follows.)

end 6

Core Sample #1 - no weld defects in sample

From Unit # 2, Cubicle B
From Weld # CZ2W - 1

Weld status: Area of core sample and any associated defect repaired

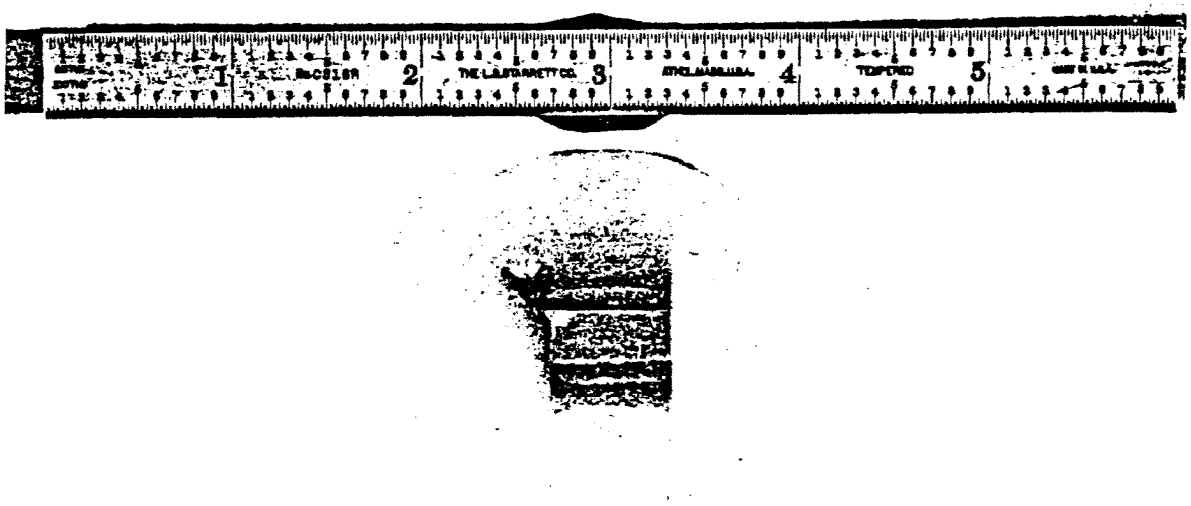

2 A

1X photograph of sample 2 , showing
no weld defects in sample

Core sample #2 (Metallographic sample 2A)

From Unit #2, Cubicle A
From Weld #TZ1W - 261FS
TZ1W - 258

Weld status: weld repaired satisfactorily

photo #1

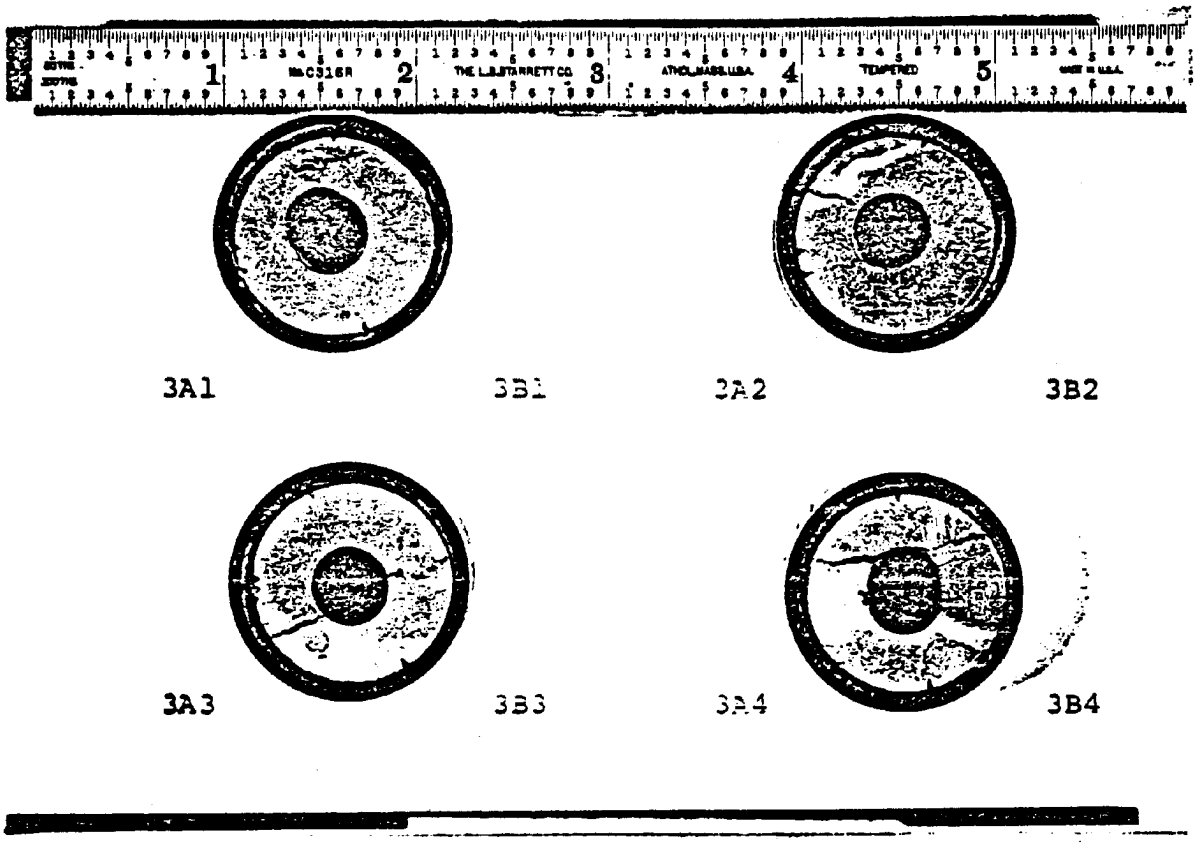

1X photograph of samples 3AB-1, 3AB-2, 3AB-3 and 3AB-4, showing weld defect continuous with Lamellar tear (see page 4)

Core sample #3 (Metallographic samples 3AB-1, 3AB-2, 3AB-3 and 3AB-4)
From Unit #2, Cubicle B
From Weld #TZ5W - 207

weld status: weld defect was removed and area of defect repaired

photo #4

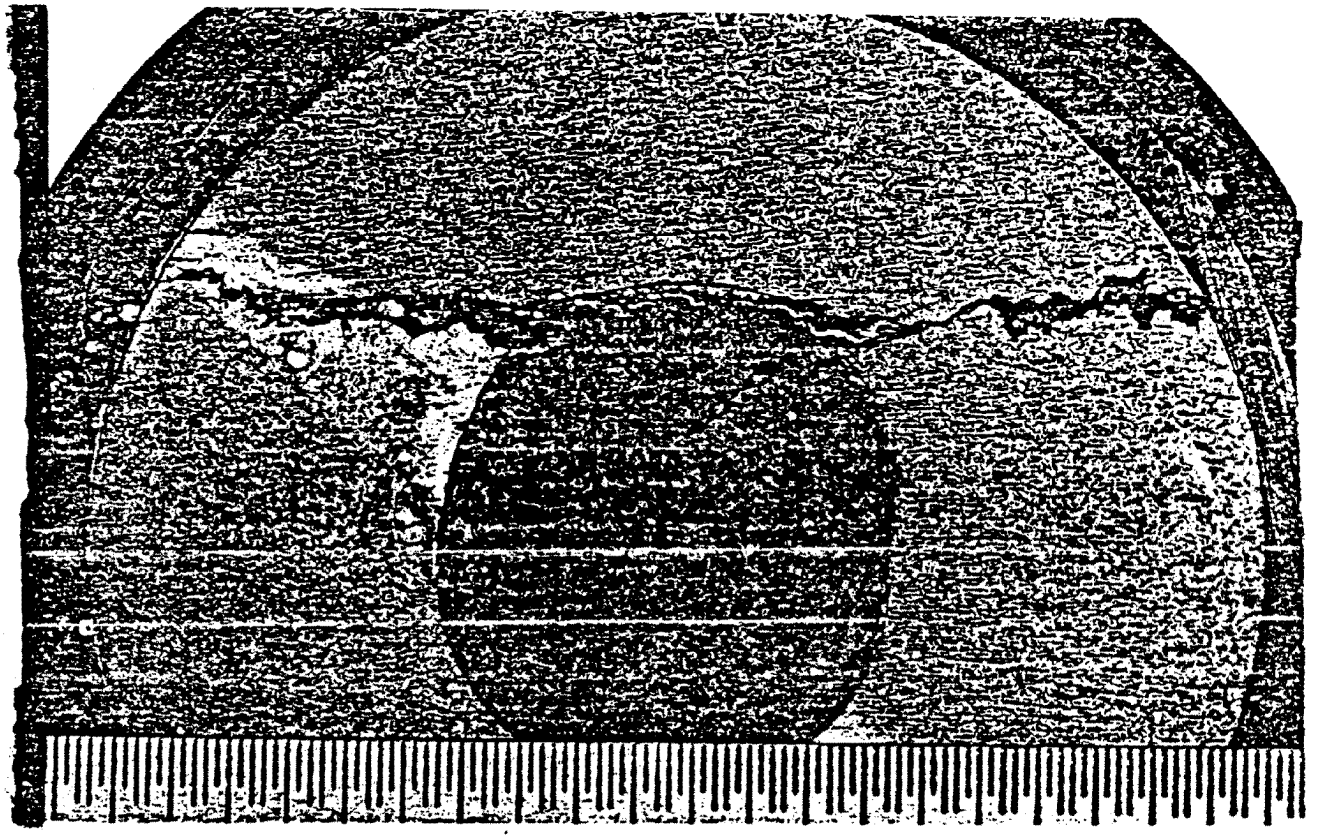

6X photograph of sample 3A4, this photo shows that lamellar tearing is continuous with the weld cracking - not "fortuitously ...in the vicinity of a large weld defect."* Whether one caused the other cannot be determined by examination.

Photo #21

*quote from Sun Ship petition, Affidavit of Mr. Eugene Schorsch, Sun Ship

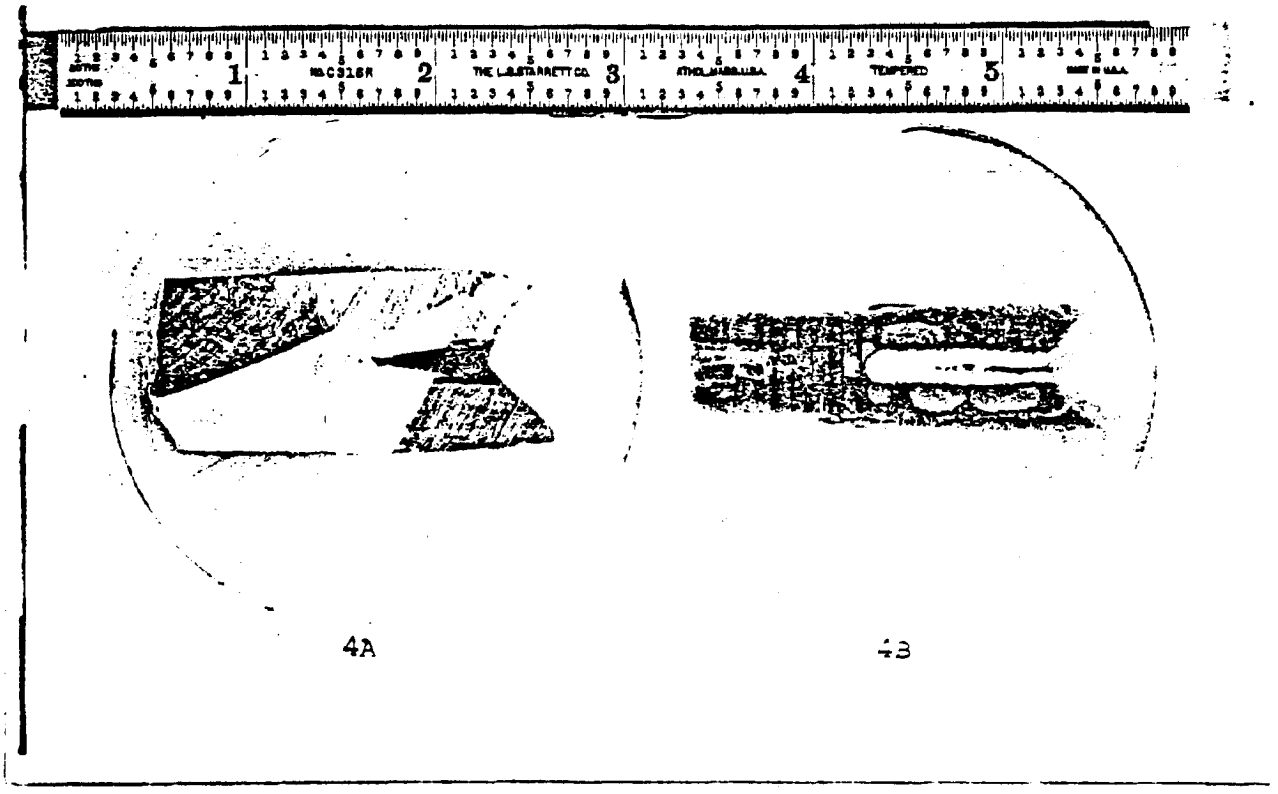

1X photograph of samples 4A and 4B. This sample has a weld metal defect

Core Sample #4 (Metallographic samples 4A and 4B)
From Unit #2, Cubicle B
From Weld #BZ2W-86

Weld status: weld defect was removed and area of defect repaired

photo #3

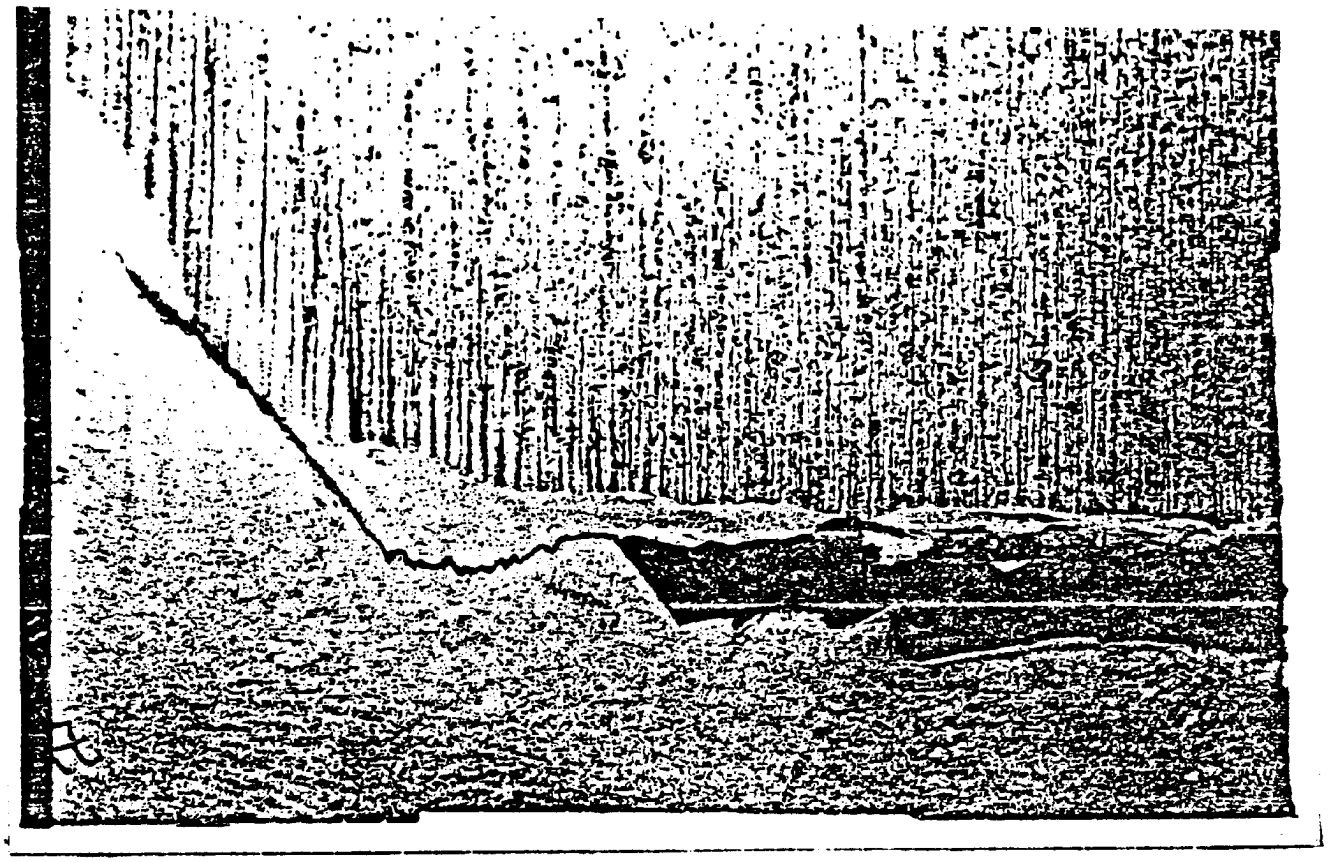

10X photograph of area of sample 4A This photo shows a tear or crack which is entirely in weld metal; note opportunity to propagate into lamellar tearing was rejected.

photo #43

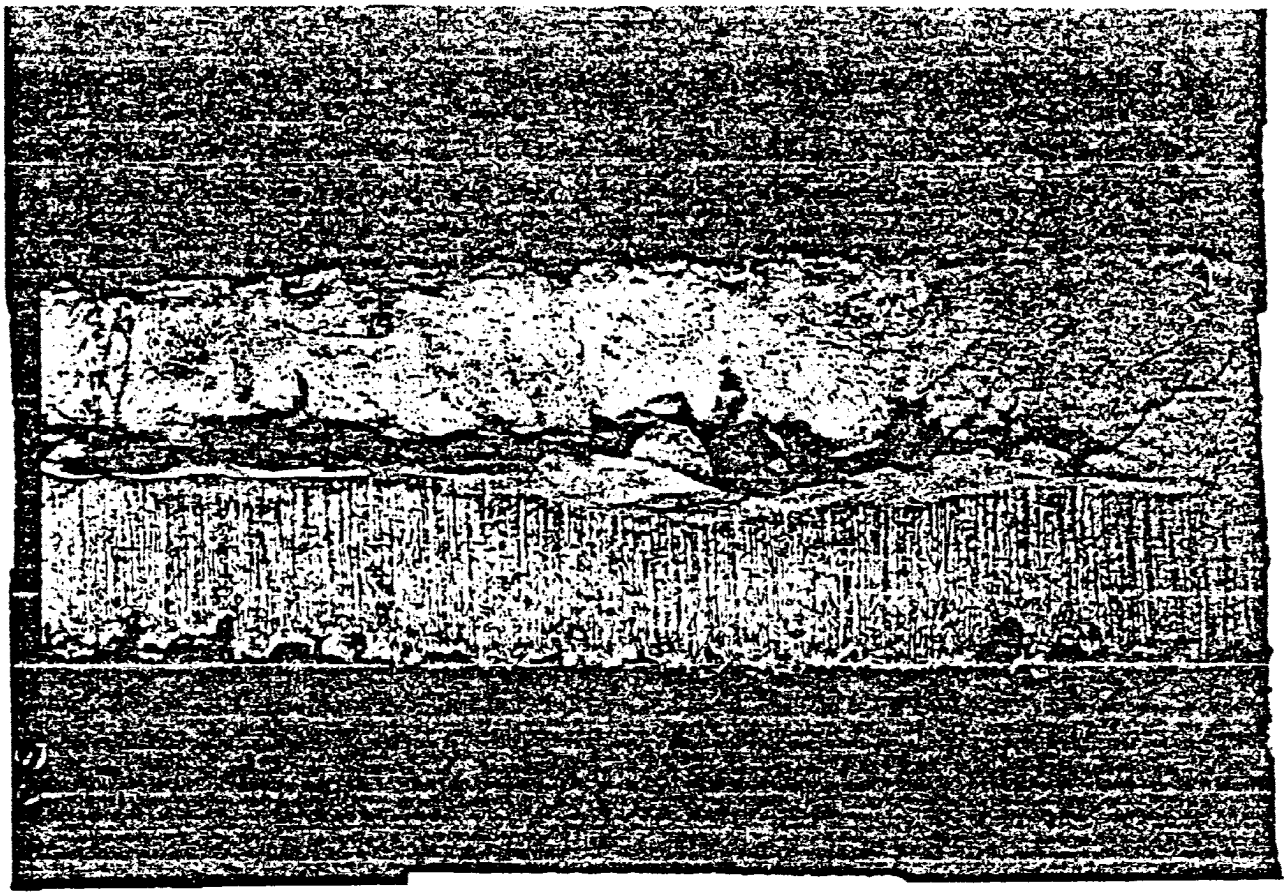

10X photograph of area of sample 4B , showing that the defective area is entirely in weld metal.

photo #39

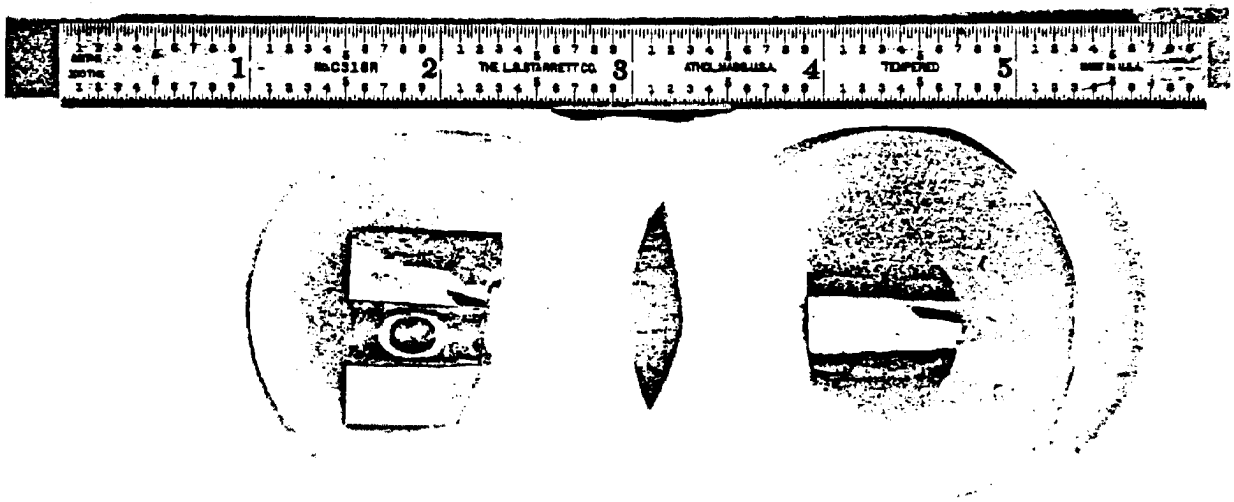

5A 5B

1X photograph of samples 5A and 5B , showing weld defect and small sub critical size lamellar tear in 5A (see pages 9 and 10)

Core sample #5 (Metallographic samples 5A and 5B)
From Unit #2, Cubicle B
From Weld #TZ5W19

weld status: weld defect was removed and area of defect repaired

photo #2

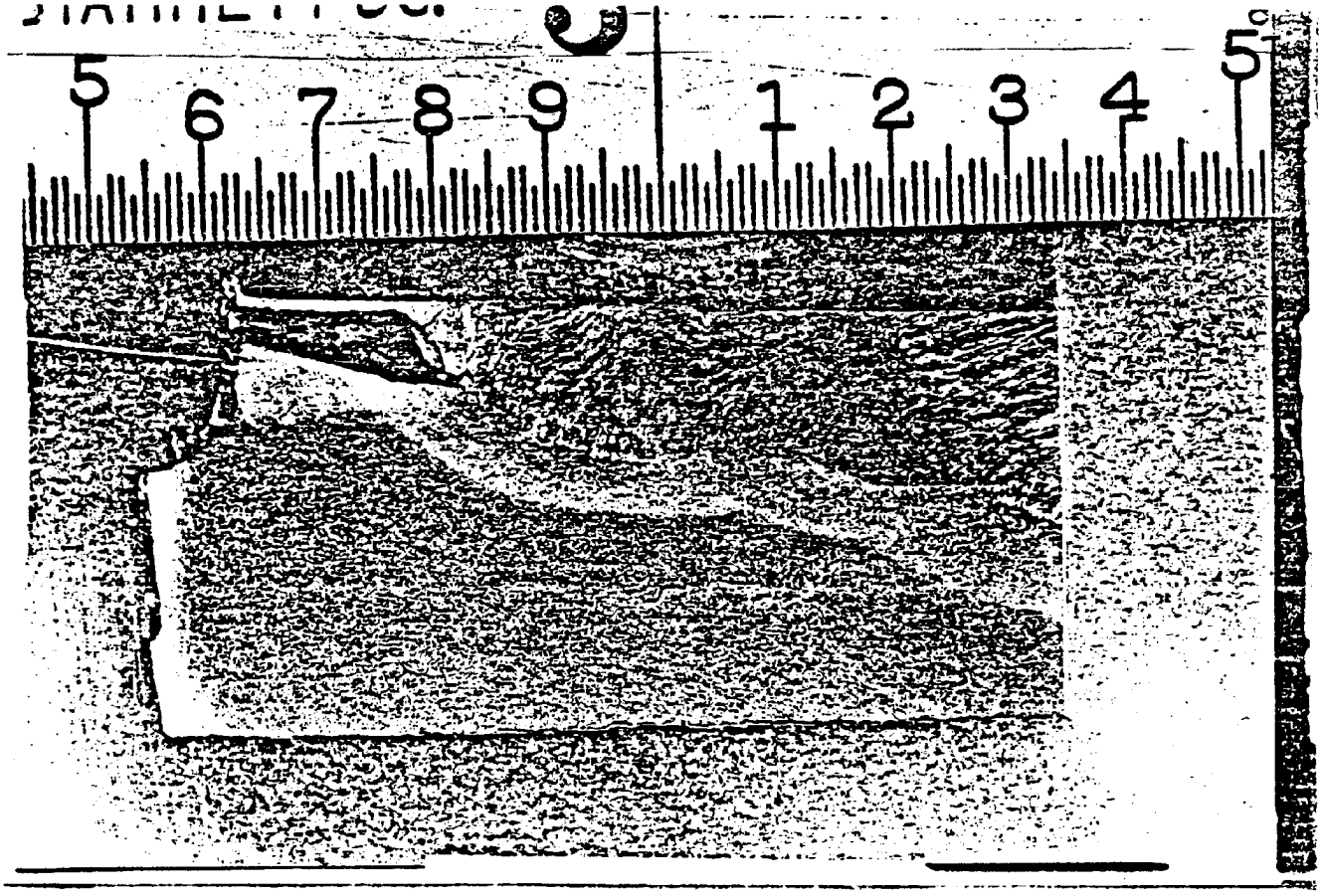

6X photograph of sample 5A , showing that lamellar tear is less than 0.2 inch in length, which is subcritical in size for brittle fracture.

photo #10

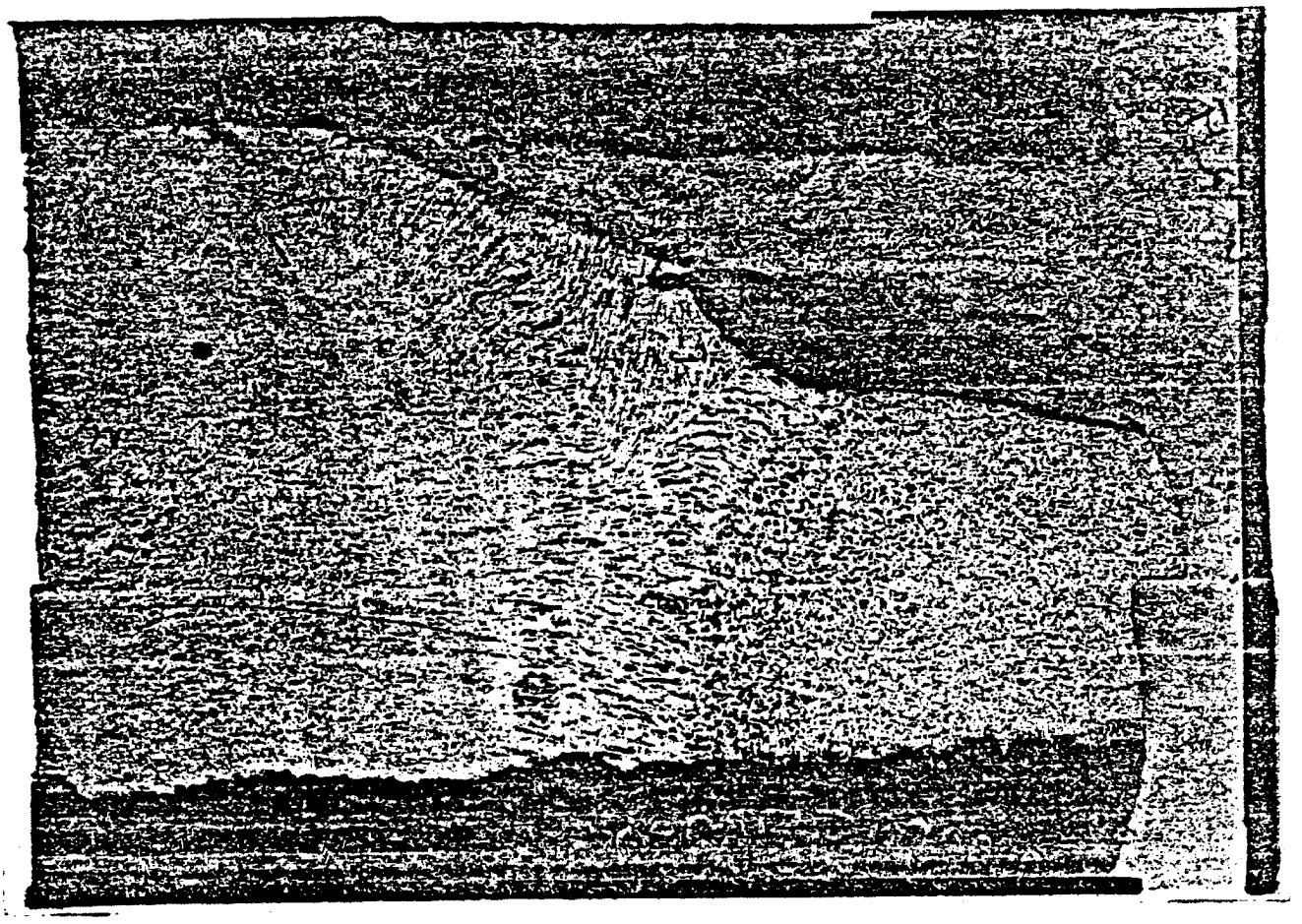

10X photograph of area of sample 5B, showing small defect in the weld metal.

photo #29

Core Sample #6 - no weld defects

From Unit #2, cubicle A
From Weld #TZ3W170

weld status: area of core sample and any associated defects repaired

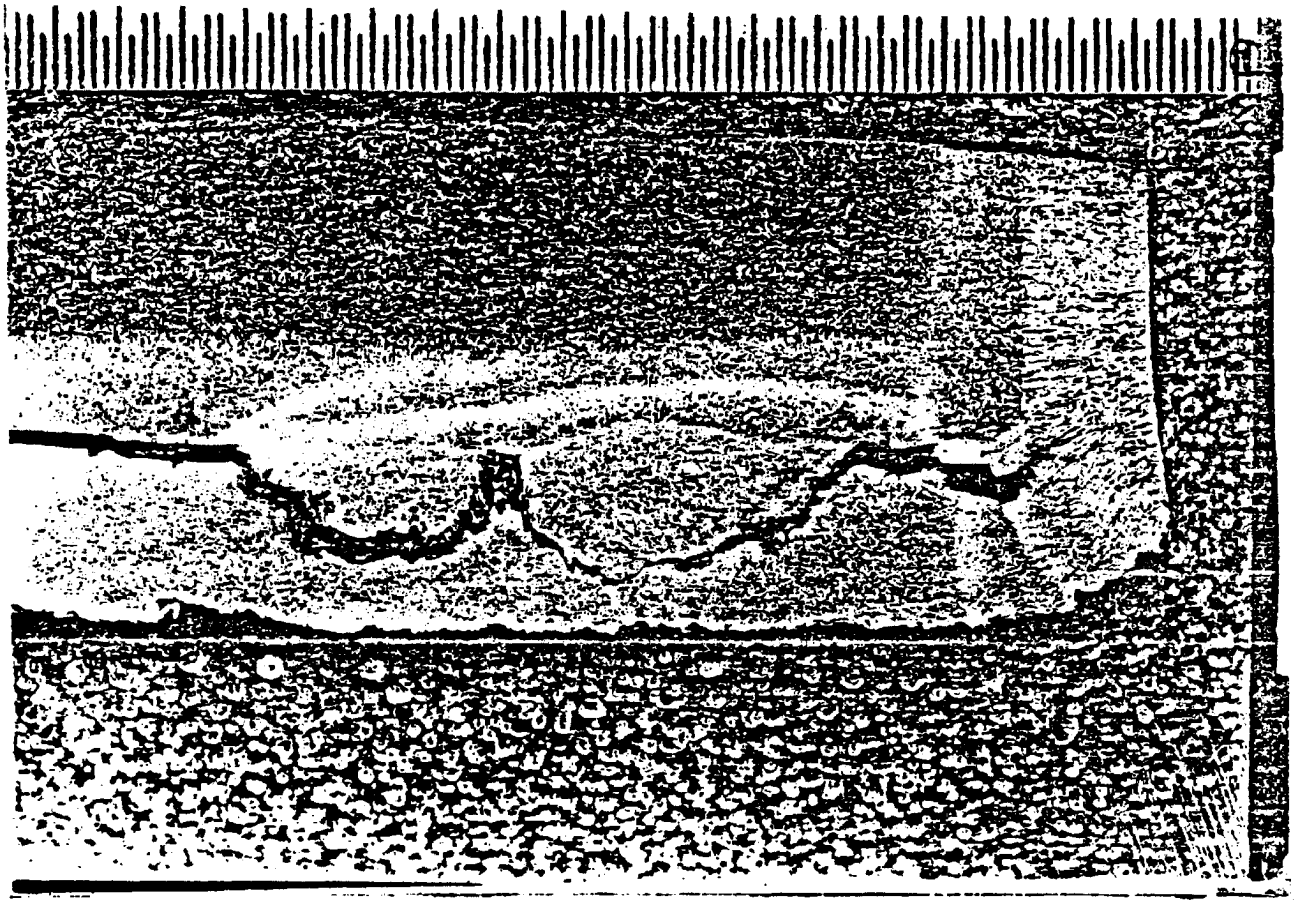

6X photograph of sample 7A , showing weld metal tear or crack. Total length is 1.2 inches (see pages 13,14, and 15)

Core sample #7 (Metallographic samples 7A and 7B).

From Unit #2, Cubicle A
From Weld # TZ4W94

weld status: weld defect was removed and area of defect was blended into sound metal.

photo #78

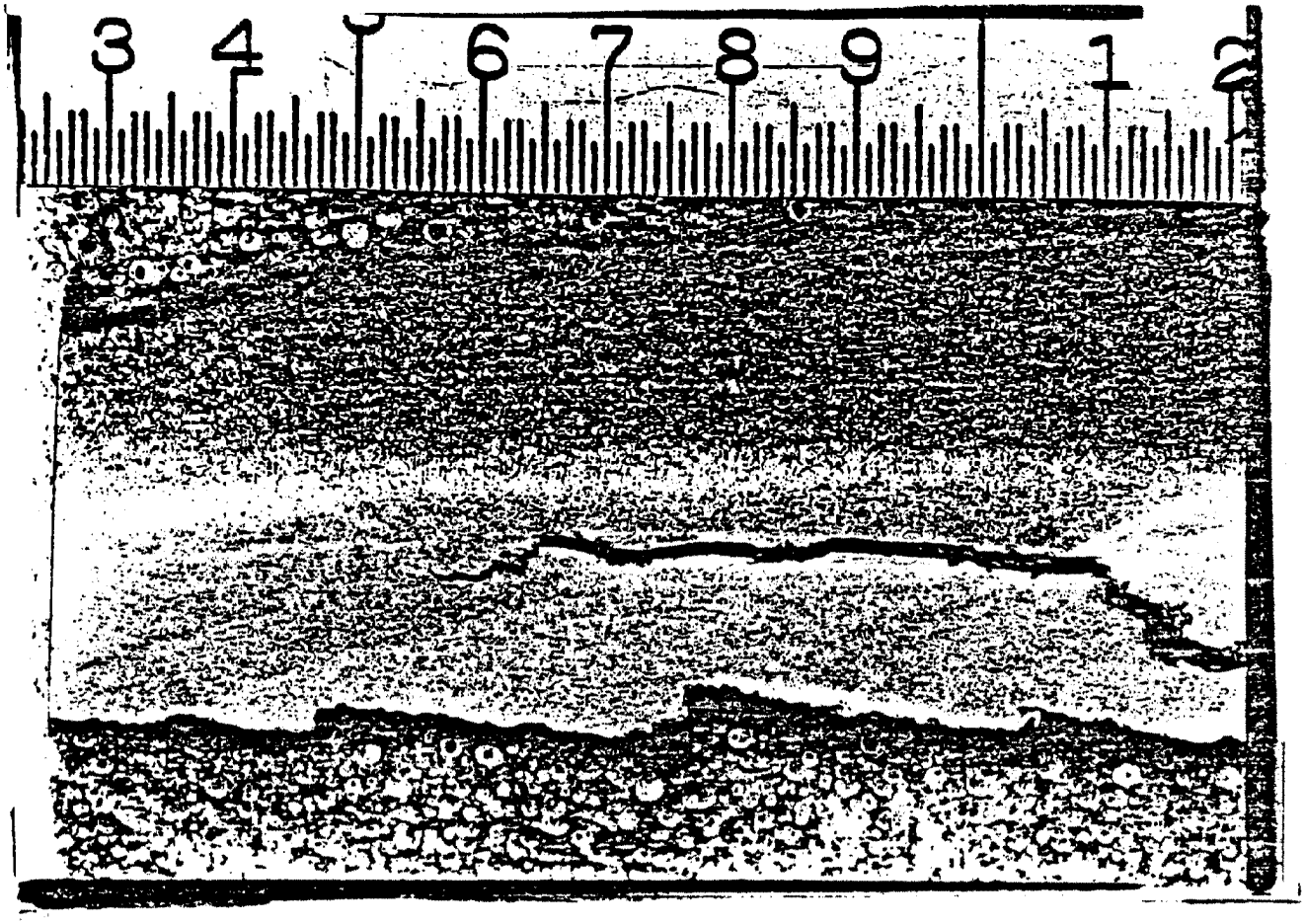

6X photograph of sample 7A , continuation of defect on page 12

photo #79

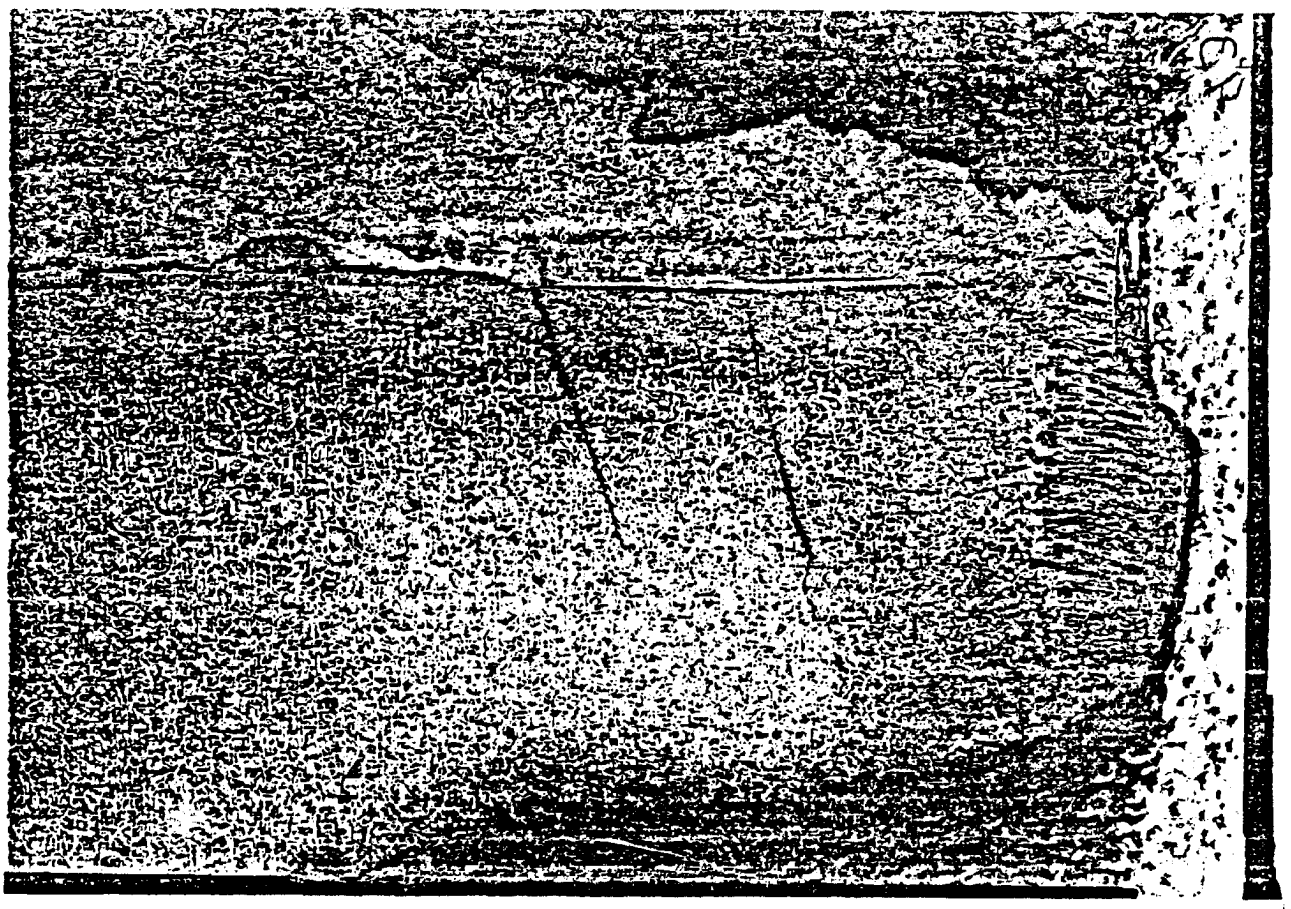

10X photograph of area of sample 7B . This photo-shows base metal tears that intersect a fusion line weld metal crack. Note that tears are angled about 20° to the base metal banding due to rolling. This is not typical of lamellar tearing, and there is some doubt that these are lamellar in nature. Length of longest vertical crack is approximately 0.25".

photo #93

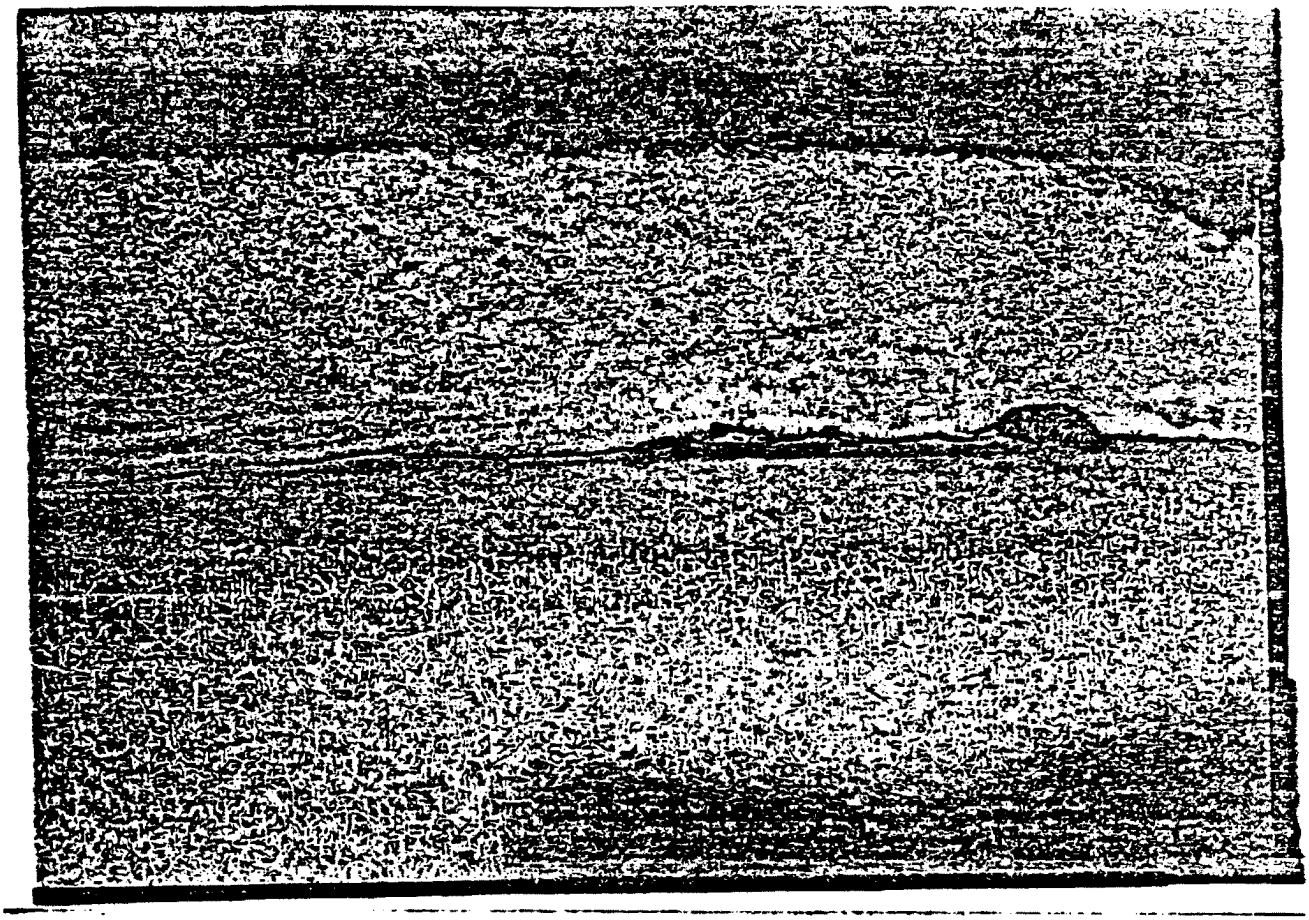

10X photograph of area of sample 7B, showing continuation of defect on page 14

photo #94

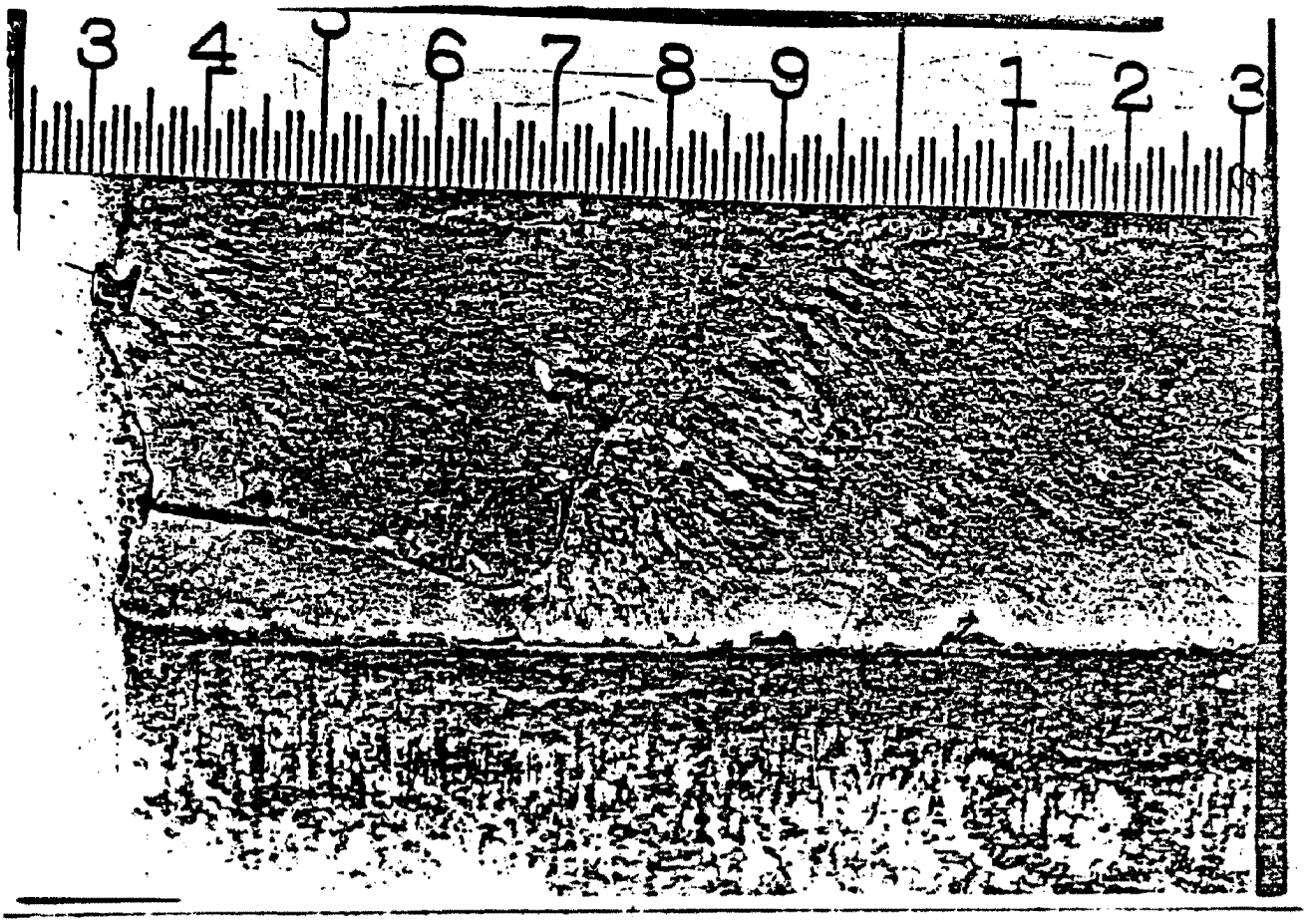

6X photograph of sample 8A , showing flaw entirely in the weld metal. Primary defect type is slag entrapment.

Core Sample #8 (Metallographic samples 8A and 8C)

From Unit #2, Cubicle B
From Weld #TZ4W98

weld status: weld defect was removed and area of defect was repaired.

photo #63

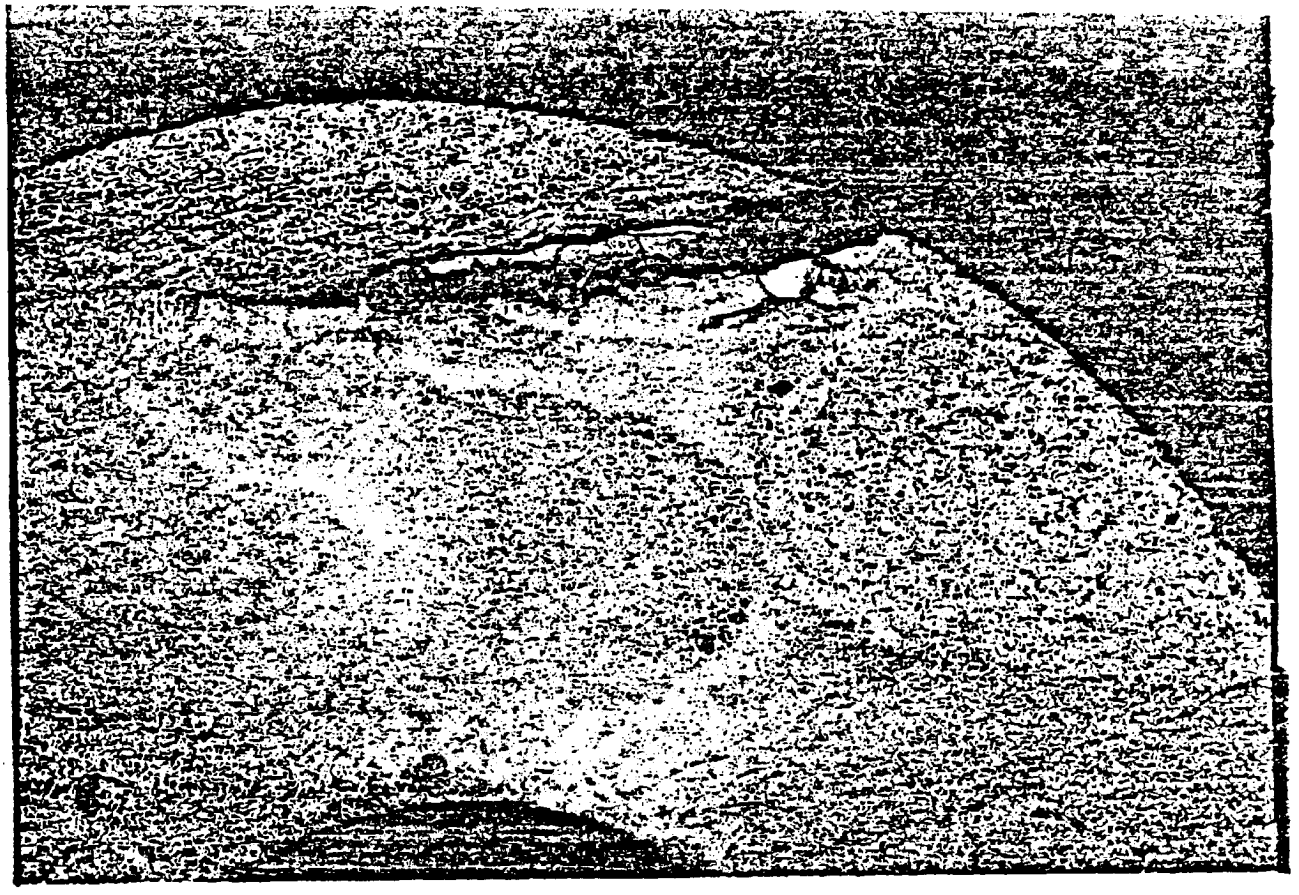

10X photograph of area of sample 8C , showing primarily lack of fusion, and also some slag and minor weld tearing. (note this sample represents a 90 degree cut to the defect shown on page 16)

photo #106

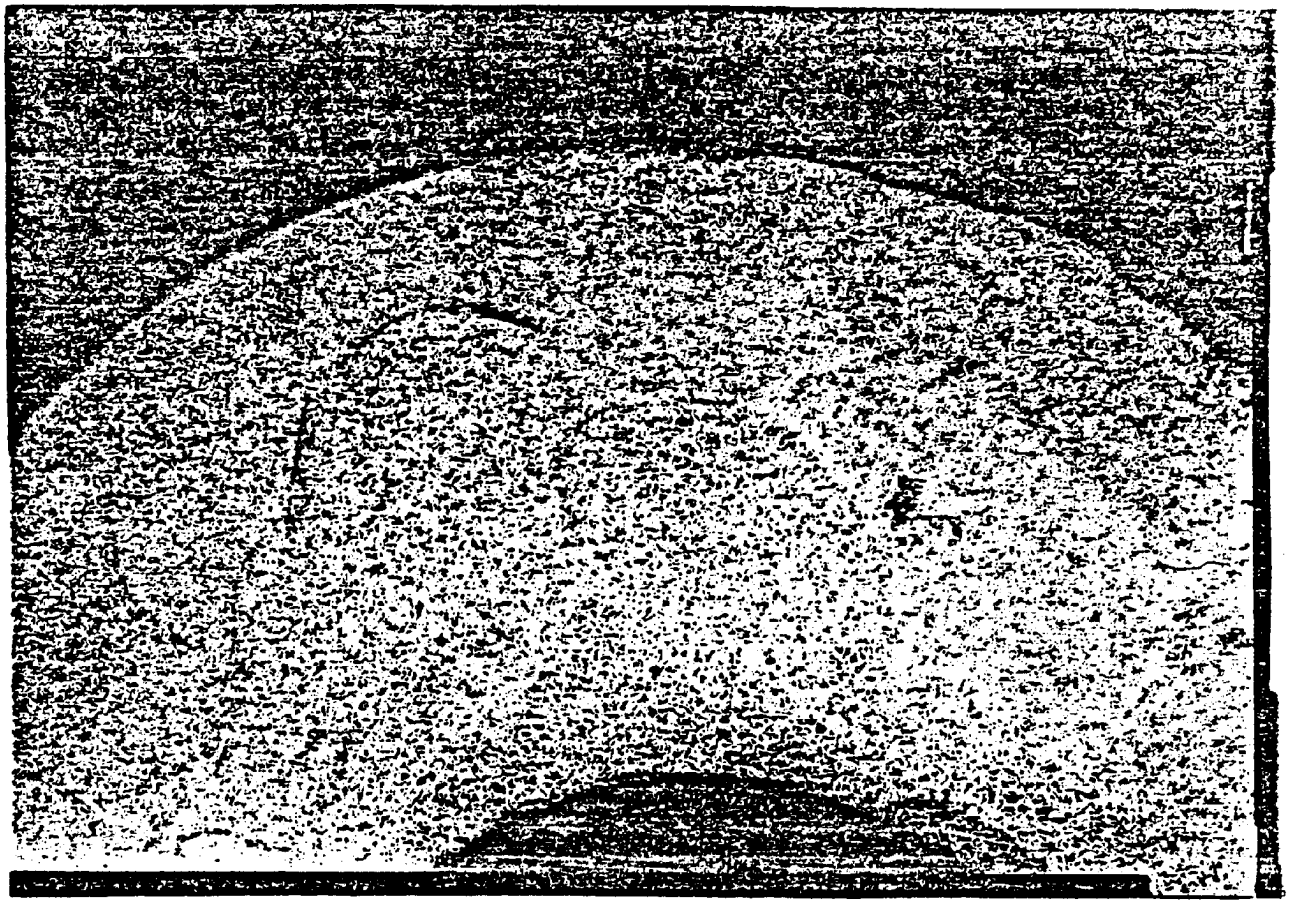

10X photograph of area of sample 9A, showing no flaws present

Core Sample #9 (Metallographic sample 9A)

From Unit #2, Cubicle B
From Weld #TZ3W130

weld status: area of core sample and any associated defects repaired.

photo #96

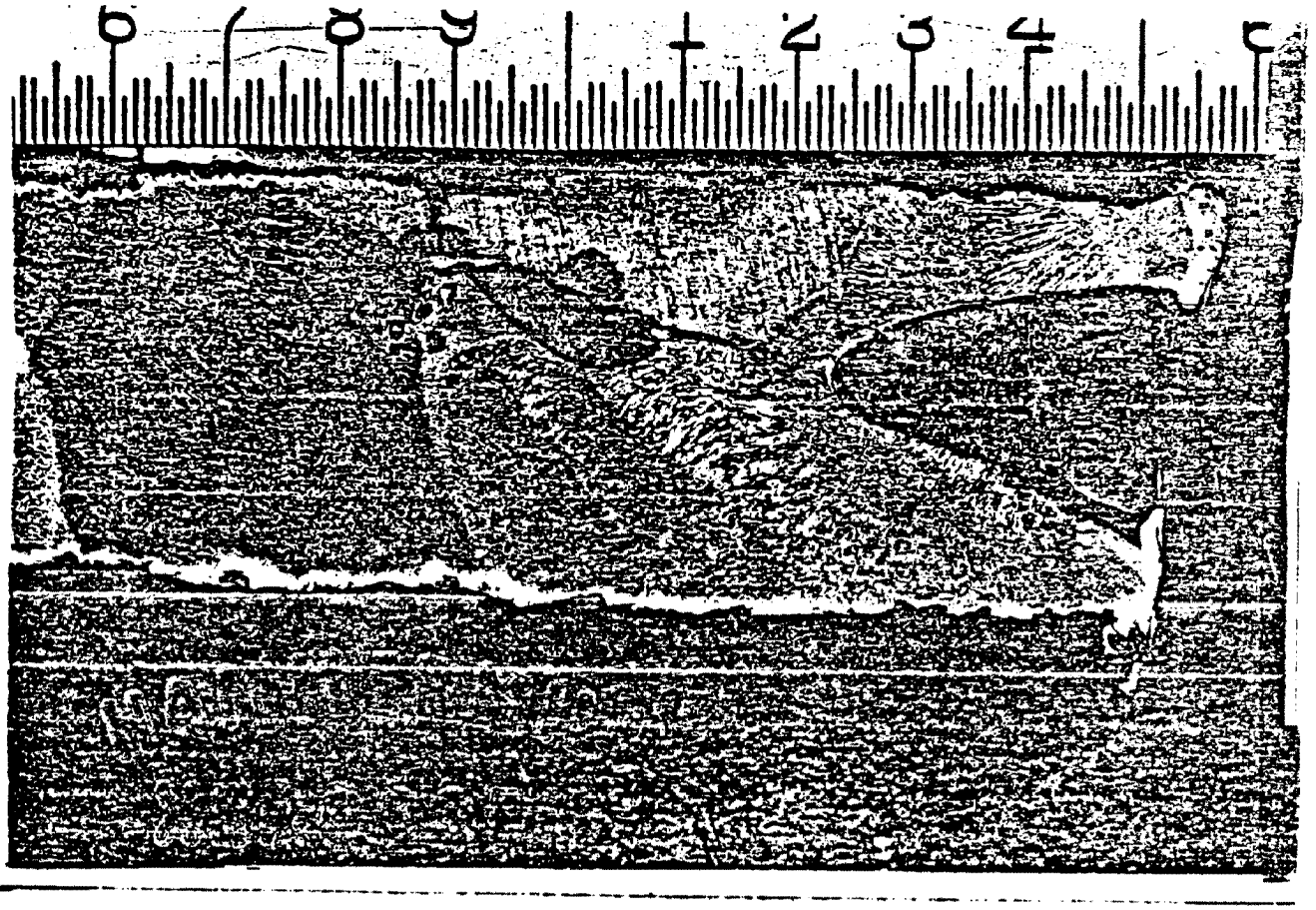

6X photograph of area of sample 10, showing slag entrapment and porosity

Core Sample #10 (Metallographic sample 10)

From Unit #2, Cubicle B
From Weld #TZ3W175

status: entire weld was removed and replaced satisfactorily

photo #131

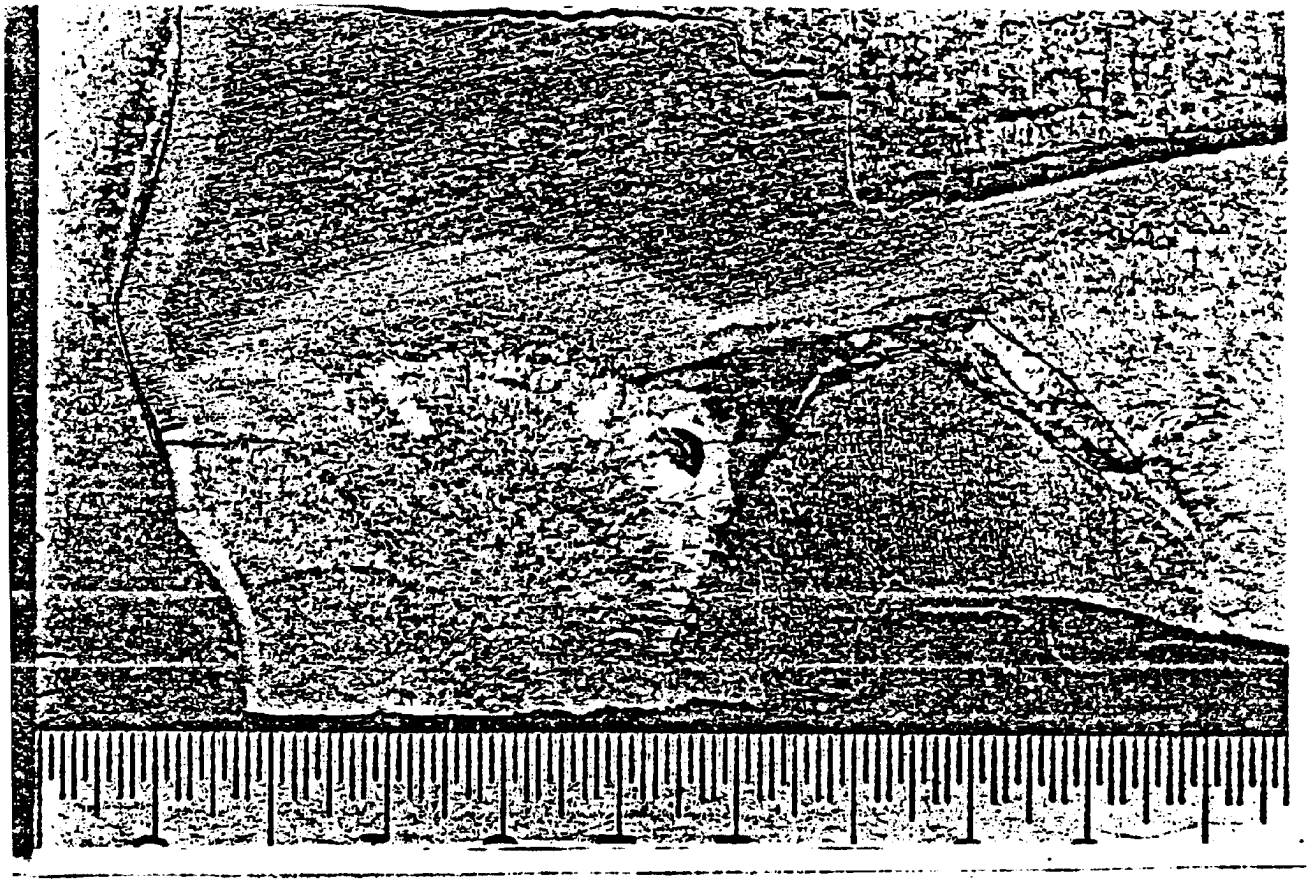

6X photograph of area of sample 11A showing lack of penetration at weld root. Defective area is about 1/2" in width.

Core Sample #11 (Metallographic sample 11A)

From Unit #2, Cubicle B
From Weld #TZ4W26

status: entire weld was removed and new gusset was used for replacement and inspected satisfactorily after replacement.

photo #117

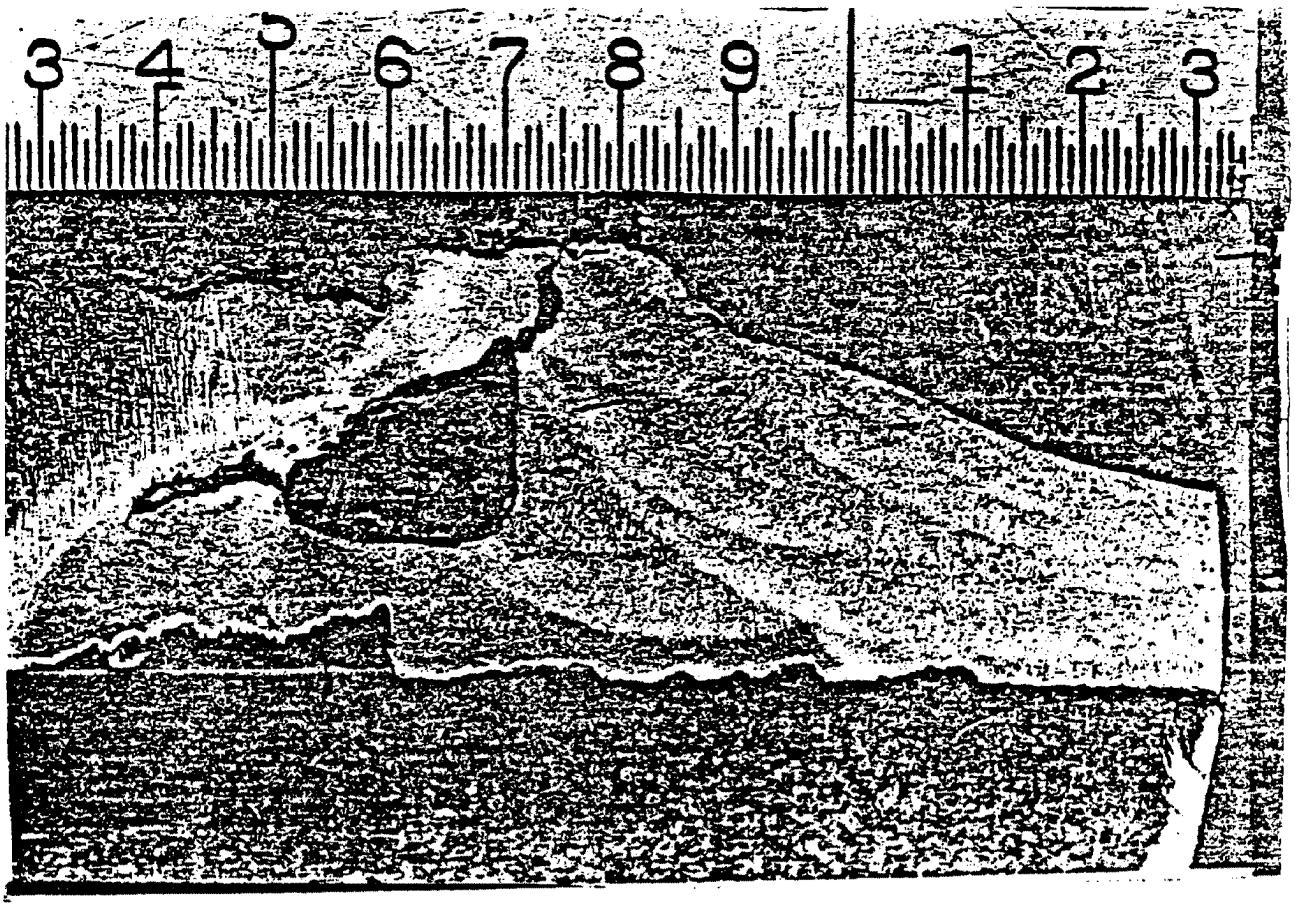

6X photograph of area of sample 12A, showing a large slag entrapment associated with some tearing. Also a 1/16" isolated weld tear is visible.

Core Sample #12

From Unit #2, Cubicle B
From Weld #TZ4W195-1FS

status: weld defect was removed and area of defect blended into sound metal.

photo #128

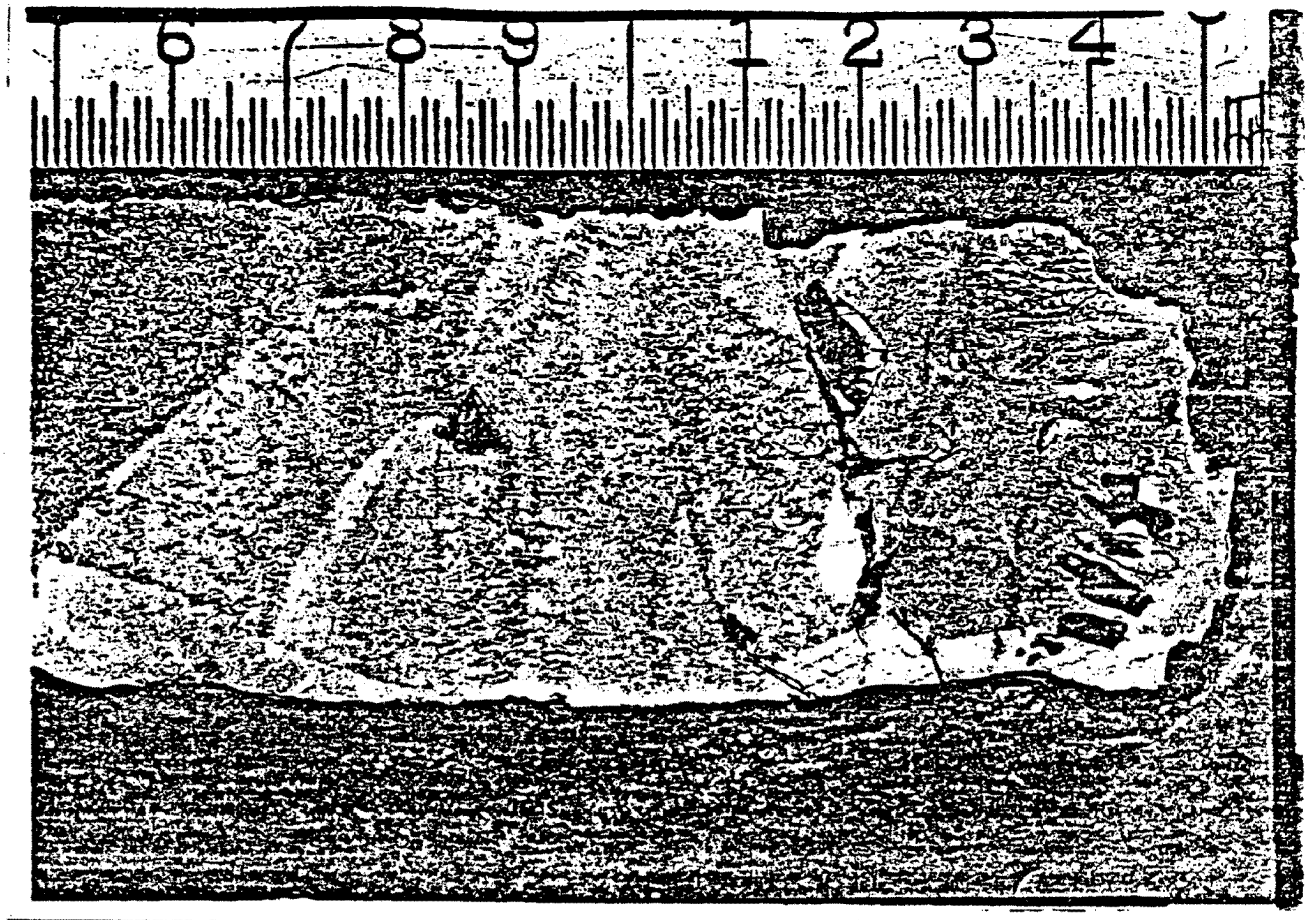

6X photograph of sample 13, showing slag entrapment and lack of fusion in weld metal.

Core Sample #13 (Metallographic sample 13)

From Unit #2, Cubicle B
From Weld #TZ4W201-1

weld status: weld defect was removed and area of defect was repaired.

photo #139

EVALUATION OF SUN SHIP CORE SAMPLES REMOVED FROM NORTH ANNA UNIT 2 STEAM GENERATOR SUPPORT STRUCTURES

PART - 1

Introduction

I am Joseph M. McAvoy a metallurgist employed by Virginia Electric and Power Company (VEPCO). I have reviewed the 13 core samples removed by Sun Ship from Cubicle A and Cubicle B of the North Anna Unit-2 steam generator support structures. My review has been in conjunction with the review performed by Vepco consultant Dr. Robert Stout, of Lehigh University, and the views presented here are mine and those of Dr. Stout.

Before a discussion of our interpretation of the significance of the Sun Ship core sampling, it is necessary to put the entire core sampling program into proper perspective.

Sun Ship has supplied the commission with a document identified as "SS-3" entitled "Examination of Core Samples from Repaired Unit-2 Steam Generator Supports". In this document Sun Ship has presented a rather one-sided picture of their core sampling program as well as the significance of defects found in the core samples.

It is Vepco's position that the following significant points should be stated:

1. Sun Ship was allowed to remove up to 10 core samples from each available Unit-2 steam generator support or cubicle after post weld heat treatment, but prior to final inspection and repair. Cubicles A and B were available to Sun Ship; Cubicle C had been repaired and was near completion, so no core samples were taken from this cubicle.

2. Sun Ship set both the number of core samples to be taken (10 per cubicle), and the conditions of sampling - that being Sun would have the option to take core samples from welds showing defects during the Vepco inspection, which did not clear after being excavated to ¼" depth. Sun later requested that Vepco also agree to allow Sun to remove core samples from the surface of unground welds, and Vepco agreed.

3. Vepco was allowed by the Court to refuse a core sample location in a weld only where excessive damage would be done to the structure in removing the core. Examples of this are where other unrelated welds would be damaged or where plates, beams etc. would require removal. Vepco refused only 5 locations requested by Sun Ship during the entire core sampling period. Sun Ship did not contest Vepco's refusal of any of these locations.

4. Sun Ship has stated that they "were not permitted to take core samples from the base material of the flanges..." Concerning this position Vepco notes that most core samples show some base metal, with some samples being almost entirely base metal. The base metal in these samples, infact, was from the associated flanges, gussets, and webs.

5. Sun Ship was shown over 230 welds which met their criteria for evaluation to determine whether core samples were, or were not, to be taken. These welds required repair by the Vepco criteria. At the time Sun Ship began to core sample welds in the supports, a total of 1794 welds remained to be inspected and cleared in Cubicles A and B. Sun, therefore, was presented with a reasonable percentage of welds from which to take core samples.

   Although Sun was permitted to take a total of 20 core samples, they took only 13, officially declining to core sample welds with indications over 210 times. It is obvious to Vepco that for matters related to the Vepco vs. Sun Ship litigation Sun Ship was attempting by core sampling, to establish the existance of numerous defects of a specific type which would best support their legal position.

Part II

Evaluation of defects found in core samples of welds with known defects and in the process of being repaired.

Basic Defect	Number of Core Samples
No defects	4
A developed lamellar tear (known dimensions about 1" by 1")	1
A small lamellar tear (about 0.2")	1
Weld defects including slag, porosity, lack of fusion, weld tears and weld cracks	6
Small base metal tears, type unspecified (0.25" maximum)	1

Vepco's interpretation of the defects found in the core samples is presented in booklet form which I will present to the NRC Staff at the conclusion of this meeting.

PART - III

Summary of Significance of Sun Ship Core Sampling Program

There are three general summary points which we feel can be made:

1. Welds which were inspected by Vepco and found to have weld defects necessitating repair were shown to have weld defects by metallography.

   Conclusion: In effect the cores chosen by Sun Ship confirmed the fact that Vepco was justified in repairing welds with rejectable defects.

2. Several core samples (perhaps 4) were found to contain some indication of common weld zone cracking or tearing (confined for the most part to the weld metal). These samples also exhibited typical weld defects such as slag, porosity and some lack of weld fusion. After post weld heat treatment, such defects were found and repaired employing typical inspec- and repair procedures.

   Conclusion: A small percentage of the total welds showed typical weld defects such as slag, porosity and lack of fusion. Occasionally, some associated weld cracking or tearing, a condition not uncommon to encounter when welding large structures, was also found. Such defects, normally rather small, were found through inspection and repaired in the normal course of repairing the welds after post weld heat treatment. We now feel confident that the defects have been successfully repaired as verified by our inspection procedures.

3. In the core samples lamellar tears, or decohesion cracks, were found to be a rare defect type. Of approximately 230 welds offered to knowledgeable Sun Ship observers only one weld was core sampled which showed a developed lamellar tear, developed meaning about 1" by 1". This defect had been found in the course of investigating weld defects utilizing typical inspection procedures, and the defect was being repaired when the Sun Ship core sample was taken. In addition, one small separation approximately 0.2" in length was observed in another sample. This defect did not represent a well developed or significant lamellar tear. A third sample shows two small base metal separations, each less than 0.25" in length, which cannot be precisely characterized, but which do not appear lamellar in nature. These defects are not of critical size.

Conclusion: It is the opinion of Vepco that the structures as reparied do not contain lamellar tears of significance to service performance. Infact, no lamellar tears of any size have been found in the repaired structure utilizing the UT inspection program which was developed, as stated earlier, specifically to detect lamellar tearing. Also, Sun Ship's tenacity in searching for such defects, in joints with know defects, and finding so few varifies our position in this matter.

1 MR. STOUT: I would like to make general remarks
2 on the materials we are talking about, particularly A-36
3 material.
4 This, I think, will fit in with the discussion which
5 is to follow on more specific points of fracture mechanics and
6 the fracture toughness of the material used in these cubicles.
7 Now, the Intervenor has alleged that A-36 steel will
8 be susceptible to brittle fracture under the conditions specified
9 for the North Anna Station.
10 These allegations are based not on tests, but on
11 generic data for this class of materials.
12 Sun further claims that there is no assurance of the
13 adequate notch toughness of the supports even under normal
14 operating conditions.
15 I would like to present some facts which I think
16 are relevant to this question even though I am not going to
17 get into great detail about the materials.
18 First, I would like it clear that when I did some of
19 the work more recently, I was doing it not for any litigation
20 but for determining the safety of the structures because it was
21 made clear to me by VEPCO that that was the overriding question:
22 are these materials safe? Therefore most of this discussion
23 will be in that direction.
24 Let's look at A-36 steel, steel that has been used
25 in large tonnages, has been used for the construction of

1 thousands of bridges and other structures, buildings, supports
2 for power stations and so forth.
3 This material has a history of satisfactory performance
4 in the great majority of its applications.
5 The few brittle fractures that have occurred, have
6 indeed occurred under conditions where the material was
7 operating below the transition temperature as measured by
8 a common Charpy test.
9 The bridge failures, for example, occurred at
10 temperatures below freezing, some of them down to minus 30,
11 and this means therefore, that the transition temperature may
12 have been 150 degrees higher than the temperature at which the
13 brittle failure occurred.
14 This we have to keep in mind in looking at these
15 materials in the North Anna application.
16 Obviously, any brittle fracture is of concern.
17 AASHTO has developed a specification allowing the use of A-36
18 steel in bridge service 70F below the 15 ft-lb Charpy TT or
19 NDTT under conditions which really are not too dissimilar from
20 the ones we are discussing here. There are residual stresses
21 in bridges of yield point magnitude and the loading strain
22 rates are higher in bridges than those specified here under
23 abnormal conditions, the 2/10th strain per second that has been
24 specified. I think then we can take that point into considera-
25 tion and it will be discussed further later.

1 I would like to point out another interesting
2 feature about these cubicles that ran through my mind a week
3 or so ago; with reference to the cubicles that were being
4 repaired.
5 They were alleged to have large defects in them.
6 They were preheated locally so that there were
7 stresses set up by that thermal disturbance.
8 They were moved about. They were shipped. They
9 were exposed during many of these operations to temperatures
10 well below 80 degrees Fahrenheit and despite the stress
11 excursions that were introduced by the removal of metal, local
12 heating, and so on, not a single brittle fracture occurred.
13 This is significant because we have been, I think,
14 led to believe that there was great danger that these supports
15 might pop apart even under normal service conditions where
16 stresses are less than 6 ksi.
17 It's rather peculiar that we didn't get any such
18 fractures.
19 I'm glad we didn't and I know why we didn't.
20 In the course of examining the material that we
21 have in the cibicles rather than the general class of materials
22 (which over the years I think the steel companies would claim
23 with justification has been considerably improved). I chose
24 to have four heats of steel tested and those samples were given
25 to me.

1 I took them back to my own laboratory and ran the
2 tests myself.
3 Each of these four heats showed a transition
4 temperature at 15 foot-pounds of 70 degrees Fahrenheit or less.
5 They were scattered between 30 or 40 Fahrenheit
6 and 70 degrees Fahrenheit.
7 As has been shown previously, the 25 mil transition
8 was not in violation of the code; that is to say the values above
9 80 degrees Fahrenheit were above 25 mils expansion.
10 So that these results were quite encouraging and
11 substantiated the idea that the material was satisfactory
12 from the viewpoint of notch toughness.
13 Mr. McAvoy has pointed out the incidence of defects
14 shown by the Sun core samples.
15 It's interesting that of all of the choices that could
16 have been made and of all of the samples actually taken, there
17 was only one lamellar tear discovered in an area that VEPCO
18 was repairing.
19 From these facts, I believe that there is no basis
20 for the statement that the supports are liable to brittle fracture
21 under normal service conditions.
22 The evidence is to the contrary. It's easy, but
23 I think irresponsible, to make claims that there is a risk of
24 brittle fracture in a structure.
25 All structural steels are subject to brittle fracture

1 under certain conditions. The question that the engineer has to
2 answer is: is there danger of brittle fracture under the service
3 conditions anticipated?
4 My judgment is that these cubicles are adequate in
5 notch toughness to meet the specified service conditions in
6 light of the fact that they have been repaired with great care,
7 that the properties of the material are satisfactory, and that
8 indeed the minimum service temperature is going to be 80 degrees
9 Fahrenheit and the strain rate is going to be less than 2/10ths
10 per second.
11 More details of this kind of discussion will be given
12 to you by Dr. Corten, consultant to VEPCO.
13 (Mr. Stout's statement follows.)
14
15
16
17
18
19
20
21
22
23
24
25

DC R. D. STOUT - LEHIGH UNIVERSITY

Remarks for the NRC Meeting on April 13, 1976

A. Introduction

1. Sun Ship has alleged that A-36 steel will be susceptible to brittle fracture under the specified conditions of service at the North Anna Station.

2. These allegations are based, not on tests, but on generic data for this class of materials.

3. Sun further claims that there is no assurance of the adequate notch toughness of the supports even under normal operating conditions.

B. Evidence relevant to the issue

1. A-36 steel has been used in bridges, cranes, etc. for years under similar strain rates to those anticipated in the supports under accident conditions and at temperatures down to -30F (-35C). Very few brittle failures have occurred despite service as much as 150F below Charpy TT or NDTT.

2. AASHTO has developed a specification allowing the use of A-36 steel in bridge service 70F below the 15 ft-lb Charpy TT or NDTT.

3. It is significant to note that these cubicles were exposed to considerable stress excursions during fabrication and repair due to local preheating, metal removal, moving and shipping all under temperatures well below expected service temperatures. Nevertheless no brittle fractures were induced even though flaws due to lamellar tearing are alleged to be present.

4. Four heats of A-36 steel obtained from cubicles of Units 1 and 2 were tested and found to exhibit 15 ft-lb Charpy transition temperatures between 40 and 70F. Also lateral expansion values exceeded 25 mils at temperatures above 80F. The expected minimum service temperature is 80F; the maximum strain rate under accident conditions is 0.2 per second.

5. All core samples examined by Sun Ship come from regions identified by Vepco as requiring and in process of receiving repair. The 13 samples were chosen from some 200 locations being repaired as those most supportive of Sun's case. Nonetheless, only one core contained appreciable lamellar tearing, 2 showed minute tears (<¼"), 6 cores contained only weld metal defects, and 4 cores were essentially sound.

C. Conclusions

1. There is no basis for statements that the supports are liable to brittle fracture under normal service conditions. All evidence available is to the contrary.

2. It is easy but irresponsible to make vague allegations about the risks of brittle fracture in a structure. All structural steels are susceptible to brittle fracture under certain sets of conditions. It is my engineering judgment that the North Anna supports are adequate in notch toughness to meet even the abnormal conditions in light of the careful fabrication procedures followed, the mechanical properties revealed by tests, and the anticipated 80F minimum temperature exposure coupled with the maximum strain rate of 0.2/sec.

Robert D. Stout

CR8089
AK:bwl
S8

MR. CORTEN: I am H. T. Corten, Professor of Theoretical and Applied Mechanics at the University of Illinois,Urbana.

I was asked could I compute, estimate the size of the critical cracks that might exist in this structure. I want you to note carefully I am changing the ground rules at this point. Everybody else is talking about what is present in the structure and I am going to talk about what could be tolerated from a fracture-safe point of view and not from a good fabrication point of view or not from the view of what is there, but from the point of view of what could be tolerated. These are not present in the structure.

They could be tolerated from a fracture point of view.

My starting point is to approach this by considering the stresses and the loads that are applied to the structure.

The material properties,and let me note this is the first time we have had Bob Stout's material on properties available to everybody.

We have the advantage of knowing what the properties are in the supporting structures. With these two items I propose to make the calculations for a series of different conditions which we will talk about of what are the critical flaw sizes from a fracture-safety point of view, reliability point of view.

1 Let me go first to the loads that are present. As I
2 understand it, there is a static deadload we have heard about.
3 There may be five operating basis earthquakes, however, the
4 critical one is that where we combine the one design basis
5 earthquake with pipe rupture with the deadload. Having examined
6 the question of vibratory pump loads, we conclude there will be
7 no fatique-crack initiation and no fatique-crack propagation from
8 these sources.
9 Therefore, there will be flaws only as they have been
10 described in the nondestructive inspection, or as they are put
11 into service. These flaws will not grow during the service of
12 this structure.
13 The flaws themselves I would like to categorize in two
14 areas or two different ways, two different categories. The
15 defects associated primarily with welds and these that have
16 projects in a direction normal to or transverse to the primary
17 members, and as a second category those possible flaws which are
18 normal to the short transverse or through-the-thickness direction.
19 Those would be the lamellar tears we are talking about. I didn't
20 say any of those were present. I will look at those to see how
21 large they could be.
22 The toughness properties of this material have been
23 obtained by Dr. Stout. I would like to show you these
24
25

values. I apologize for my slides. I thought we would be a more compact group of people. I will do the best I can in making clear the important points here. This is the Charpy energy in foot-pound versus the temperature at which the test was made.

This is A-36 steel taken from four different heats of the generator support cubicles as they exist. We have identified the separate heats here.

These were taken from the quarter-thickness location of plates that were two inches thick and three inches thick.

We do not have thin one-inch thick material?

There are enough data so that the four particular curves have been drawn as shown. From this we will look at the situation for a working minimum operating temperature of 80 degrees at this point.

Now, these particular tests were obtained at a strain rate of about 10 inches per inch per second. As you heard a little earlier this is two orders of magnitude faster than any of the loads that can be applied to this structure.

The question arises how can we account for this difference in strain rate.

We propose to employ the procedure that has been suggested by the AASHTO standard for bridges in doing this by Barsom in a recent article in which he accounts for a

1 change in strain rate by changing the temperature at which he
2 takes the toughness values.
3 Specifically because we are using a -- we are expecting
4 a lower strain rate in service than occurred in the test we are
5 going to adjust the temperature upward by 45 degrees to
6 compensate for that change in strain rate.
7 The appropriate toughness of the matter at the lowest
8 operating temperature would be read off at 125 degrees.
9 There is one curve that gives a value less than 50
10 foot-pounds.
11 The rest exceed 50. When I convert to K_{IC}, I will
12 have a number from this set of data and the rest will be above
13 50 as a basis for my calculation.
14 I am calculating what is the allowable flaw size from
15 a fracture point of view.
16 Let me illustrate the AASHTO approach to this question.
17 For a series of steels, with yield strength from about 35 to 160,
18 a set of data show the shift in transition temperature in going
19 from a slow static test, 10^{-5} per inch per second, to a fast
20 Charpy Test, ten inches per inch per second.
21 The 160 degrees is the shift that occurs from the
22 very slow to the very fast. We want to take a portion of that
23 for our purposes.
24
25

Let's look for a moment at the A-36 steel that is available. This came out of Barsom's report. This is for A-36 steel. This is for the slow test, this curve is for the standard Charpy Test, and this is for the intermediate test he ran.

That test is 10^{-3} inches per inch per second. Our interest is in 10^{-1} inch per inch per second. We would be here. We would extrapolate linearly on a logarithmic scale to the appropriate shift. Similar data for the A-572 shows these data are similar to the A-36 material.

Going back then to the previous slide, we propose to handle the temperature shift, assuming that we are talking about a total of 160 degrees between very slow and standard Charpy speeds (ten inches per inch per second). Our situation is here at 2×10^{-1}, which is the estimated fastest loading of these structures. We find this suggests a 45 degree temperature shift in the upward direction from the data we have.

In looking at the data then, the toughness data for the A-36 steel at 80 degrees with a strain rate of 2×10^{-1} would be equal to that obtained at 125 degrees at the standard Charpy rate. These values of Charpy toughness have been read off at 125 degrees Fahrenheit.

Notice that all of these exceed 50 foot-pounds with the exception of one heat. So I am going to use, when I

1 convert to a K_{IC} in a moment, something that corresponds to
2 50 foot-pounds where these numbers are higher and I will use the
3 actual number in the one case.
4 We have an interest in both longitudinal and transverse
5 and through-the-thickness or short transverse data.
6 We don't have short transverse data on this structure.
7 We have taken data from a Stone and Webster report, DCC-871 and
8 another reference listed in that report, where through-the-
9 thickness short transverse data have been obtained.
10 In one case there was a value at this temperature,
11 125 degrees, of 26 foot-pounds and in another seven to fifteen
12 foot-pounds was the scatter band.
13 I have used the seven foot-pound as an estimate of
14 toughness in that direction for purposes of calculation. That
15 is as low a toughness as we have seen for steels that are not
16 in a way abused by hydrogen cracking.
17 The AASHTO recommendations now convert the Charpy
18 numbers to K_{IC} numbers and that particular conversion is based
19 on the upper figure here, a series of data for ABS Class C steel,
20 302-B and A-517 steel show the data points relating K_{IC} and this
21 is K_{IC} divided by the modulus E versus the Charpy energy
22 absorption value.
23
24
25

1 There are two lines drawn here. Really some of
2 the data come from one and some from another set of data in
3 the sense that some of the specimens were fatique pre-crack
4 and others were just with the standard Charpy notch in them.
5 When we use the fatique-cracking with the Charpy
6 standard, this is recommended. When we used the standard
7 Charpy notch upper curve with A equal to 5 is used.
8 I propose, since we have standard Charpy Test data
9 that we will use five as the number to convert from Charpy
10 to the K_{IC} numbers.
11 That is what I was showing you on the previous slide.
12 I have redrawn this to take the Charpy number, come up and
13 read off the actual K_{IC} number over here.
14 Going back to the specific table one, which is
15 difficult to read, we find that having accounted for strain rate,
16 we now have values of toughness which are equal to or greater
17 than 90 ksi in in all cases, with this one exception, where we
18 have a toughness number of 69 ksi in.
19 I am going to use in the following calculations, two
20 toughness numbers, 69 and 90, as a basis for estimating
21 allowable flaw sizes that would be critical from a fracture point
22 of view.
23 When we get down to the short transverse direction
24 (through-the-thickness), I will use 32 ksi in corresponding to 7
25

1 foot-pound. When we get to crack arrest, I will use 32
2 as about the lowest number I have seen for toughness in any
3 of these steels. We will consider crack arrest from flaws of
4 the arc strike type and deal with that question last.
5 Having dealt with the material properties I have to
6 go to the stresses that result from the loads. You have seen
7 some of the values that were estimated. In addition there were
8 residual stresses.
9 You heard how these were treated. I have said to
10 myself that I believe that load stresses for this design basis
11 accident, plus pipe rupture, plus dead load stresses, will be
12 equal to the yield strength.
13 I have to differentiate at this point, however, between
14 what I am going to say are stresses along the length of a weld
15 which I am going to apply this criteria to, and to the thickness
16 situations which I think are different.
17 Through-the-thickness situations where we have had a
18 stress anneal condition, the residual stresses in that thru-
19 thickness direction are down in the order of 5 ksi. In the cases
20 where hammer peening has been used because the nature of the
21 hammer peening, it has eliminated through-the-thickness residual
22 stresses. I don't think the hammer peening does away with the
23 longitudinal stresses or transverse, but for the thru-thickness
24 it does. For residual stress, I will
25

use 5 ksi in the thru-thickness direction with a miximum load stress in the thru-thickness. My notes read 9.4 psi, but we have corrected this to 12.3 ksi.

Looking then at the type of calculation we can make, in Table 2, we are going to assume the stress is equal to the yield strength of the material, 36,000 ksi.

And that includes both residual and load stresses.

I will use linear elastic fracture mechanics to compute the allowable flaw size that could exist for materials with toughness that we have measured and tabulated on that previous table.

I will consider two cases. One with a slender long flaw, the most severe possible, and secondly, a somewhat less slender, not so long, fatter flaw that might be present also, to give you a feel for the kinds of numbers that come out of this.

The toughness of one heat was 69 ksi in. The rest were 90 ksi in or greater. Looking at 69 at a stress of 36 ksi with a surface correction factor M of 1.12 leads to a crack size of .836 in as half the width.

If we take a look at the actual crack size now, A is half the width, 2A will be the width. It will be about so wide and a little more than 8 inches long for critical fracture conditions.

1 If I change to this higher toughness which pervades
2 most of the structure, I think I am above 1.35 for A and when
3 I double that I get 3 inches by 13.
4 I have forgotten one other thing. I have elected
5 to deal with semi-elliptical surface flaws, because they give
6 me the smallest crack. So by choosing to calculate the semi-
7 elliptical surface flaw I get the smallest ones. All others will
8 be larger. I have done this in a four-inch plate where I am not
9 taking credit for plane stress behavior. In a one-inch-thick
10 plate, I will get some benefit due to yielding thru-the-thickness
11 and the toughness would be higher and the critical flaw sizes would
12 be larger.
13 This other shape gives me flaws of a similar kind not
14 quite as long, but deeper, so that we have an idea of how big
15 the surface flaws can be.
16 At this point I would say that I can almost be sure
17 that by the naked eye I can see something this large. You can
18 not miss it with the inspection techniques that were employed.
19 Now, having assumed that the stress goes to the yield strength
20 of the material I wondered is that enough to take care of the
21 residual stresses that may be present?
22 We said under hammer peening that the longitudinal
23 residual stresses along the weld, I have estimated might be
24
25

1 half the yield strength.

2 If, in addition to that, I put on nine-tenths of the
3 yield strength, it may go beyond the yield strength. How can
4 I treat that. I have suggested we use a simplified elastic-
5 plastic analysis to do this job. Let me show you the basis
6 for this.

7 First, this follows work by Riccardella and Swedlow,
8 in which they are looking at a load deflection curve which is
9 not linear, but bends like this, and in which we will use the J
10 integral as our basis. In fact, we revert back to an
11 approximation of the J integral based on linear elastic fracture
12 mechanics to get to that.

13 What I want to do is look at the load divided by the
14 load to cause yielding in this structure, and I will plot that
15 horizontally and I will look at a change in length over this
16 original length L. And I will plot that horizontally also.

17 One curve is for load and a second curve is for
18 deflection as a function of J, which is proportional to K over
19 Ky. The point is, I can make using linear elastic fracture
20 mechanics analysis for the structure, which due to the J analysis,
21 I can demonstrate is conservative.

22 I want to allow the strain, nominal strain around
23 that crack to go 50 percent beyond the yield strength.

24

25

bw12

That I know will account for the residual stresses and load stresses that may be present there. When I do that, the question is, how can I make that calculation?

In fact, that calculation would follow a curve like this and, if I come down here, I can get a value of delta or delta Y which is correct, according to this finite element analysis.

The linear elastic would be conservative or less than that.

I will use the conservative or less value which comes down here and says I have only this much, when, in reality, I have that much, and I will make the calculation on that basis.

That is what I have done here. We will use the J integral to support our position and approximate strain analysis which is conservative, we convert the K_{IC} formula into strain.

We assume due to residual stresses, plus load stresses, that one and a half times the yield strain is what we need.

That gives us the strain of this amount.

I will calculate A, everything else being the same. I find that the crack depth of semi-elliptical surface crack can be half an inch deep by four inches long, and I have still achieved only the fracture condition for this situation.

Ace-Federal Reporters, Inc.

1 For the 90, I am at five-eighth of an inch deep crack
2 and six inches long. These are cracks of a size I can find and
3 see without difficulty, using the inspection techniques you
4 have heard about. That leads me to feel comfortable with
5 regard to load stresses and residual stresses along welds and
6 transverse to welds, even in terms of the residual stresses that
7 may be present.
8 Let's look at the third condition where we have
9 potential stresses through-the-thickness and potential lamellar
10 tears present, and see what we can do with that one.
11 This time I take an elliptical buried flaw in the
12 plate. For through-the-thickness direction, normal to lamellar
13 tears and conditions are estimated as follows:
14 Total stress (load plus residual), is 15 ksi.
15 Minimum toughness of 32 corresponding to seven foot-
16 pounds is what I have used.
17 For the most severe shake, a long slender flaw,
18 assuming the Q is for stress over yield stress of about a half,
19 which is about what this turns out to be for that deep duried
20 flaw, the free surface boundary connection is one, and I
21 estimate A to be 1.45 inches.
22 If it is deeply buried, it is 2A, which is 3 inches
23 wide by 15 inches long.
24 That is the lamellar tear that could be tolerated
25

for this stress in this material with the lowest toughness present, if that were a sharp crack. I have had to, as I was sitting there last night and this morning, readjust the maximum load stress which has been increased by 3 ksi.

I have to deal with something at 17.4 ksi.

When I do that and go through this calculation again that reduces this number to a little better than A=one m. and this number the length, to a little better than ten m.

So now I have a critical flaw, potentially 2 inches wide by ten inches long, elliptical in shape.

The structure could stand at the highest estimated stress through-the-thickness direction include any residual stresses now.

Now before I go on to the crack-arrest situation I will comment. I have assumed throughout, that all of these cracks have been sharp. They were somehow as sharp as we could get them. We start out by saying none of them were fatigue-crack sharp.

From a lot of experience we know it is a difficult thing to get a sharp crack without fatiguing it or using hydrogen on it.

In experimental programs we have spent time and money getting sharp cracks. The things you have in this structure I propose are blunt cracks or flaws.

I anticipate the K_{IC} numbers we ought to be using

bw15

in calculations of this kind in here ought to be termed K_Q and would range from ten percent to 100 percent higher than the numbers I have shown you here. This has been our experience in a whole series of tests, that the kinds of flaws you have present in the structures are higher than we have pressured and estimated the way we have done it.

If one were to increase this number by ten percent, that means the flaw sizes will be 20 percent larger. If I increase it by two, they will be four times as large.

So I think these estimates are quite conservative and, therefore, give me great confidence that we are in a good position on this score,

There is one other condition I want to talk to you about and that has to do with crack-arrest from small cracks caused by such things as arc strikes which I am sure are present in this structure.

These arc strikes are often very small. Mr. Pellini has found a number of failures he has documented starting from arc strikes. I was interested in making a computation of how big an arc strike area must be for that to be the source of cracked initiation. I have done that by assuming a tiny crack will propagate from the arc strike out and encounter good material at some point.

I want to know how big the region of arc strike embrittlement will be or when will that crack get to good

Ace-Federal Reporters, Inc.

1 material.

2 For good material I can use a toughness of 32 ksi
3 square root of inches.

4 That is a dynamic or arrest value that occurs at the
5 lowest temperatures we have seen here.

6 I am assuming that the stress is equal to the yield
7 strength for the calculation. When I get through, I have taken
8 up a slender severe flaw, a fatter one and a round one.

9 For the slender severe flaw, I find the cracked depth
10 A, surface cracked depth of .175 is indicated and cracked depth
11 of 1.75 inches should be tolerated.

12 In a fatter crack, .93 inches long, A would be .28 in.
13 In that round crack it is .456 inches deep and twice that in
14 length. It could be as big as a quarter, when it got to good
15 material it would still stop.

16 It is at the surface, it will be half a quarter when
17 it gets to good material.

18 I suspect we have no arc strikes of this size in the
19 structure and if we do, they are not sufficiently brittle to allow
20 us to load the structure to the yield strength before that flaw
21 lets go.

22 I think that this explains much of the good service we
23 have seen from structures made of this steel when the
24 toughness is of the level we have found it
25

1 to be in this particular structure. Having disposed of those
2 series of cases, my conclusion is that with the inspection we
3 have found the serious cracks that were present. There is one
4 other consideration I would like to bring to your attention. That
5 follows from the fact that these structures were listed as stiff,
6 restrained structures.
7 I think this is true. They have gusset-welded braces
8 and they are quite stiff and the explanation was given to you
9 before, that this was needed to control the dimensions. I would
10 point out to you, as someone did, that these are redundant
11 structures.
12 By that I mean the following: If a crack starts in one
13 member, if for some reason we have missed something and a crack
14 is present which starts to run, that member is unloaded as a
15 result of the redundancy of the structure, and it will come to a
16 halt before it goes far.
17 That is the advantage to a stiff, restrained structure
18 in the sense that other members pick up the load quickly.
19 As you were told earlier, we can lose several of the
20 significant members in the structure and the structure will still
21 stand there, putting to rest the question of whether the thing will
22 fall down.
23 Thank you, Gentlemen.
24 (Slides follow.)
25

SIGNIFICANCE OF FLAWS TO INTEGRITY AND SAFETY AGAINST FRACTURE OF THE STEAM GENERATOR AND REACTOR COOLENT PUMP SUPPORT STRUCTURES, NORTH ANNA STATION

by

H. T. Corten
April, 1976

A. Loading:

1. Static (dead) load.

2. Five operating basis earthquakes.

3. One DB earthquake plus pipe rupture.

4. Possible pump vibratory loads: small.

Conclusion: Structures do not experience repeated cycles of load that cause fatigue crack propagation. Focus attention on Design Basis Earthquake plus pipe rupture load.

B. Flaws:

1. Defects associated primarily with weldments, in planes normal to the longitudinal or transverse direction. Defects are described as lack-of-fusion, slag inclusions, poses, lack of penetration.

2. Lamellar tears caused by restraint stresses during cooling of weldment in planes normal to through-the-thickness (short transverse) direction.

C. Toughness Properties of A-36 Steel Samples Taken from Generator Support Cubical, North Anna Station, Tests reported by R. Stout, Dec., 1975:

1. Basis for toughness data: Charpy V notch energy obtained in standard Charpy test ($\dot{\varepsilon}$ ~ 10 in/in/sec). See Fig. 1.

2. For "onset of crack extension," use AASHTO approach to adjusting temperature to compensate for strain rate (AASHTO fracture toughness requirements for bridge steels, by J. M. Barsom, Eng. Fracture Mech., Sept., 1975).

For $\dot{\epsilon} = 2 \times 10^{-1}$ in/in/sec, a $+45^{\circ}F$ temperature shift is estimated. See Fig. 2a and 2b.

3. For a lowest operating temperature of $80^{\circ}F$, the equivalent Charpy Energy is obtained at $80^{\circ}F + 45^{\circ}F$ or $125^{\circ}F$.

4. Charpy Energy values are used to estimate fracture toughness K_{IC}, using Barsom's recommended AASHTO formula: (see Fig. 3)

$$\frac{K_{IC}^2}{E} = 5\ (C_V)$$

5. Charpy data and the estimated K_{IC} values are tabulated in Table 1.

D. Residual Stresses:

1. For flaws normal to longitudinal and transverse directions:
   a. After thermal stress relief: $\sigma_R \sim 10$ ksi.
   b. After hammer peening: $\sigma_R \sim 1/2\ \sigma_{YS} \sim 18$ ksi.
   c. Peak load stress, $.9\sigma_{YS}$, plus residual stress, σ_R, are equal to yield strength, σ_{YS}.
2. For lamellar tears, normal to thru-the-thickness direction:
   a. After thermal stress relief: $\sigma_R \sim 5$ ksi (thru-thickness).
   b. After hammer peening: $\sigma_R \rightarrow 0$ (thru-thickness).
   c. Peak load stress (probable) 9.4 ksi plus residual stress in thru-thickness (short transverse) direction leads to: $\sigma = 9.4 + \sigma_R \sim 14.4$ ksi.

E. Total Stresses: Basis for Analysis:

1. In longitudinal and transverse direction to rolling in weldments, the load stress of $0.9\sigma_{YS}$ plus the residual stress, σ_R, may be equal to yield, σ_{YS}.

2. In the through-the-thickness direction, the load stress has been estimated at 9.4 ksi and the residual stress may cause a total stress, $\sigma_{TT} \rightarrow 15$ ksi.

F. Critical Flaw Sizes:

In the following, several cases are considered separated because of the difference in possible magnitude of stresses in the longitudinal and/or transverse direction as contrasted with the thru-the-thickness direction, and similarly the differences in toughnesses in these directions. Further only semi-elliptical surface cracks subjected to tensile loading are treated because buried cracks and combinations of tension and bending loading are less severe (lead to larger critical crack sizes). Finally onset of crack extension and crack arrest are treated separately to clarify the differences in toughness for these two conditions.

1. Onset of Crack Extension for flaws that are (have projections) normal to longitudinal and/or transverse direction (not thru-the-thickness). In Table 2, the results of linear elastic fracture mechanics computations are listed. Only a 4 in. thick plate was considered since for a 1 in. thick plate the cracks are thru-the-thickness cracks and for yield strength stresses, the actual toughness would exceed plane strain toughness, K_{IC}, and the critical flaw sizes would be larger than those listed.

Because of concern about the high magnitude at the residual stresses, an approximate but conservative elastic-plastic analysis was used to estimate critical flaw sizes. In this analysis the nominal strains were allowed to exceed the yield strain by 50 percent. By the nature of residual stresses, they are diminished by plastic strain. For this rather severe condition, the allowable flaw sizes for onset of crack extension are listed in Table 3.

2. Onset of Crack Extension for flaws (lamellar tears) in a plane normal to the thru-the-thickness direction. Computations based on L.E.F.M. (linear elastic fracture mechanics) are listed in Table 4.

3. Crack Arrest of cracks initiated from tiny extremely embrittled regions caused by, for example, an arc strike. Table 5 lists the sizes of three shapes of cracks that will arrest if the toughness encountered by the running crack is K_{Ia} = 32 ksi$\sqrt{\text{in}}$. The round crack is approximately the size of a \$.25. The significance is that if the extremely embrittled region (K_{IC} < 30) could possibly remain intact until the stress reached $\sigma = \sigma_{YS}$, the region must exceed the sizes listed in Table 5, before a crack would extend rapidly, as opposed to arresting when it encountered material of dynamic toughness of K_{Id} = 32 ksi$\sqrt{\text{in}}$. at the embrittled boundary.

G. Blunt Flaws:

All previous computations at critical crack size for onset of rapid crack extension have assumed that the flaws are sharp cracks. For the flaws under consideration (lack-of-fusion, lack of penetration, slag inclusions, poses, and lamellar tears) this is not the case. Extensive experience with these various flaws (no lamellar tears) indicates that

K_Q, the toughness for onset of crack extension for such flaws (in the absence of fatigue sharpening) is from 1.1 to upwards of 2.0 times K_{IC}. This effect would increase the strain at fracture by at least the same factor, 1.1 to 2.0 and would increase the critical flaw size by a factor of from 1.2 to 4 times.

This effect has not been included in the quantitative estimates listed in Tables 2, 3, and 4.

H. Structural Redundancy:

These "stiff, restrained" structures are also redundant. The redundancy will interact with a crack in the sense that if a crack were to extend, the cracked member would unload and transfer load to other members. As the cracked member unloads, the "crack driving force" decreases and the crack tends to arrest (as opposed to determinant structures which do not unload but rapidly fracture). This effect has not been included in the estimates of critical crack size in Tables 2, 3, and 4. This phenomena is difficult to quantify, however, there is no doubt that it materially adds to the integrity and safety of these structures.

Table 1

Toughness Data for A-36 Steel at 80°F, a strain rate of 2×10^{-1} in/in/sec produces a toughness that is equal to that obtained at 125°F and a strain rate of 10 in/in/sec, the Charpy testing speed.

Data Source	Longitudinal		Through-Thickness (short-transverse)	
	C_V, ft.lb.	Estimated K_{IC}, ksi√in.	C_V, ft.lb.	K_{IC}, ksi√in.
R. Stout, Dec., 1975				
Heat AB	90	>> 90	--	--
Heat CD	32	69	--	--
Heat F2A	67	> 90	--	--
Heat W96W	55	~ 90	--	--
Stone and Webster DC-81, 1974	93	>> 90	26	62
Heuschkel ref. 4 in DC-81 1971	47-65	84 - > 90	7-15	32-47

Table 2

Semi-elliptical Surface Flaw in 4 in. Plate

Assume: $\sigma = \sigma_{YS}$

$$a = \frac{Q}{\pi}\left(\frac{K_{IC}}{M_k\sigma}\right)^2 \quad \text{[Linear Elastic Fracture Mechanics]}$$

Case a: $\frac{a}{2c} \sim 0.1$, $Q = 0.9$ for $\sigma/\sigma_{YS} \rightarrow 1$

K_{IC} ksi√in.	σ ksi	M_k	$\frac{K_{IC}}{M_k\sigma}$	$\frac{K_{IC}}{M_k\sigma}^2$	a in.	2c in.
69	36	1.12	1.71	2.925	.836	8.36
90	36	1.15	2.17	4.72	1.350	13.50

Case b: $\frac{a}{2c} \sim 0.2$, $Q = 1.1$ for $\sigma/\sigma_{YS} \rightarrow 1$

K_{IC} ksi√in.	σ ksi	M_k	$\frac{K_{IC}}{M_k\sigma}$	$\left(\frac{K_{IC}}{M_k\sigma}\right)^2$	a in.	2c in.
69	36	1.15	1.66	2.77	.97	4.84
90	30	1.16	2.15	4.64	1.62	8.1

Table 3

Elastic-Plastic Analysis Based on J Integral and Approximate Strain Analysis (conservative).

$$JE = K_I^2 = M_k^2 \, (E\epsilon)^2 \, \frac{\pi a}{Q}$$

Assume residual stresses that cause strains equal to $1.5\ \epsilon_Y = 1.5\ (1.2 \times 10^{-3})$.

For $\frac{a}{2c} \sim 0.1$, $Q \sim 0.9$, $M_k \sim 1.12$

K_{IC} ksi$\sqrt{\text{in.}}$	ϵ in./in.	a in.	2c in.
69	$1.5\epsilon_Y$	.412	4.12
90	$1.5\epsilon_Y$	.632	6.32

Table 4

Elliptical Buried Flaw in a Thick Plate

For through-the-thickness direction, normal to lamellar tears, the conditions are estimated as follows:

$$\sigma_{total} = \sigma_{load} + \sigma_{residual} \sim 15 \text{ ksi}$$

$$K_{IC_{min.}} \sim 32 \text{ ksi}\sqrt{\text{in.}}$$

For a most severe shape,

$$\frac{a}{2c} = 0.1,\ Q = 1.0 \text{ for } \sigma/\sigma_{YS} \sim 0.5$$

For a deeply buried flaw, $M_k \rightarrow 1.0$

$$a = \frac{Q}{\pi}\left(\frac{K_{IC}}{M_k \sigma}\right)^2$$

$$a = 1.45 \text{ in.}$$

$$2c \sim 14.5 \text{ in.}$$

Table 5

Crack Arrest

Semi-elliptical Surface Flaw Initiating from a Tiny Arc Strike and Extending to an Arrest Crack Size.

Assume: (1) $\sigma \rightarrow \sigma_{YS}$

(2) When the crack reaches the size estimated that it encounters material of toughness, K_{Ia}. $K_{Ia} = 32$ ksi$\sqrt{\text{in.}}$

a. For $\frac{a}{2c} = 0.1$, $Q = .87$, $M = 1.12$

$$a = \frac{Q}{\pi}\left(\frac{K_{Ia}}{\sigma_Y M}\right)^2$$

$a = 0.175$, $2c = 1.75$ in.

b. For $\frac{a}{2c} = 0.3$, $Q = 1.4$, $M = 1.12$

$a = 0.281$ in., $2c = 0.938$ in.

c. For $\frac{a}{2c} = 0.5$, $Q = 2.2$, $M = 1.1$

$a = 0.456$ in., $2c = 0.912$ in.

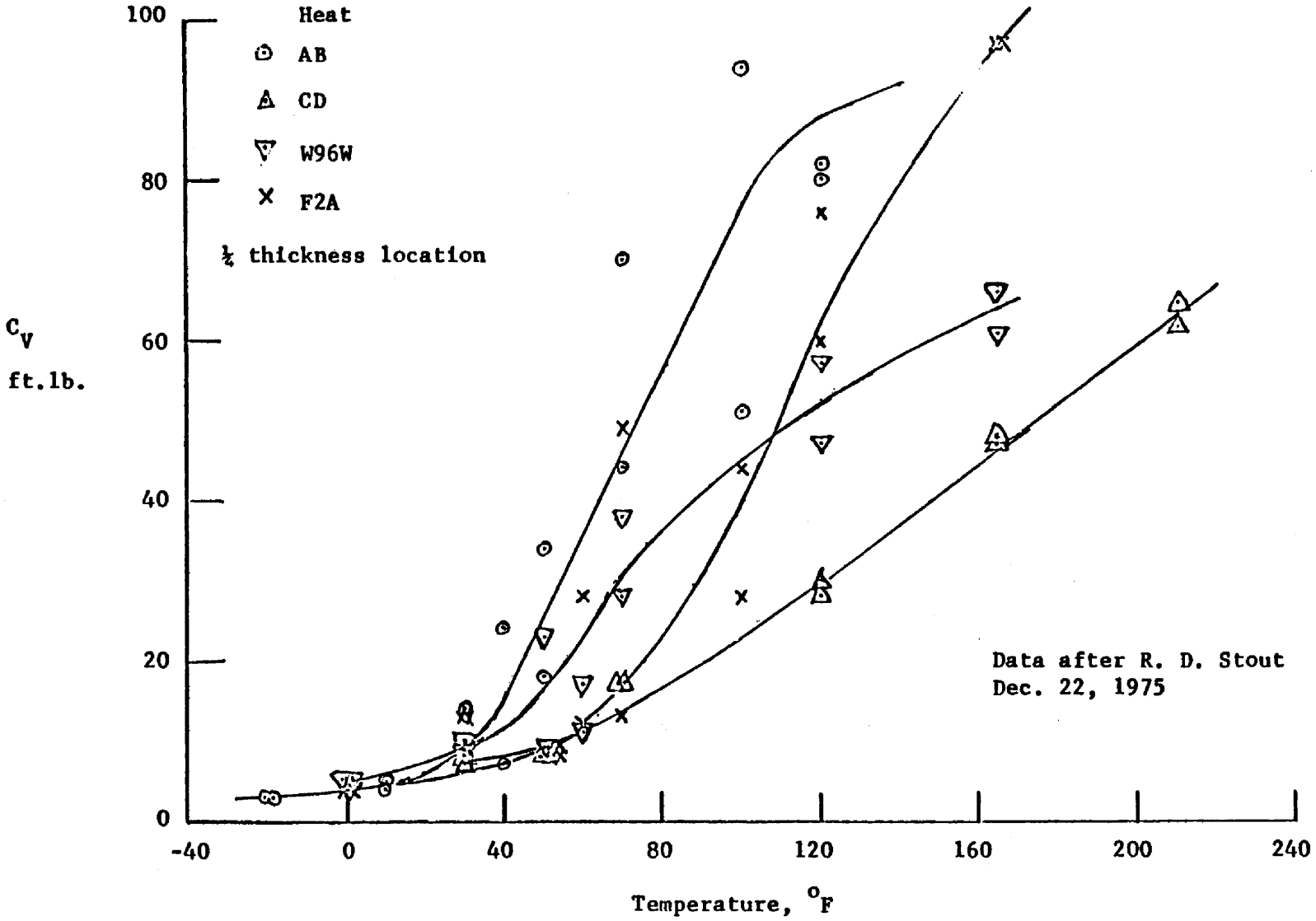

Fig. 1. A-36 Steel from Generator Support Cubicles - North Anna Station

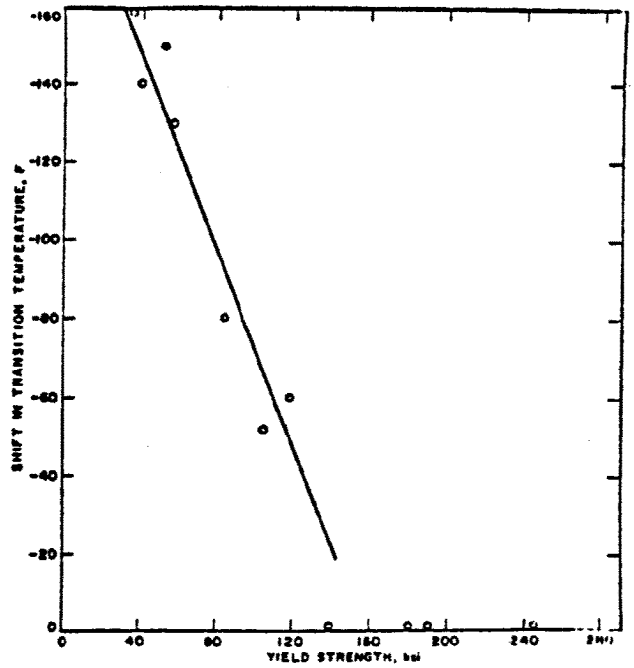

After Barsom
AASHTO Requirements, 1975

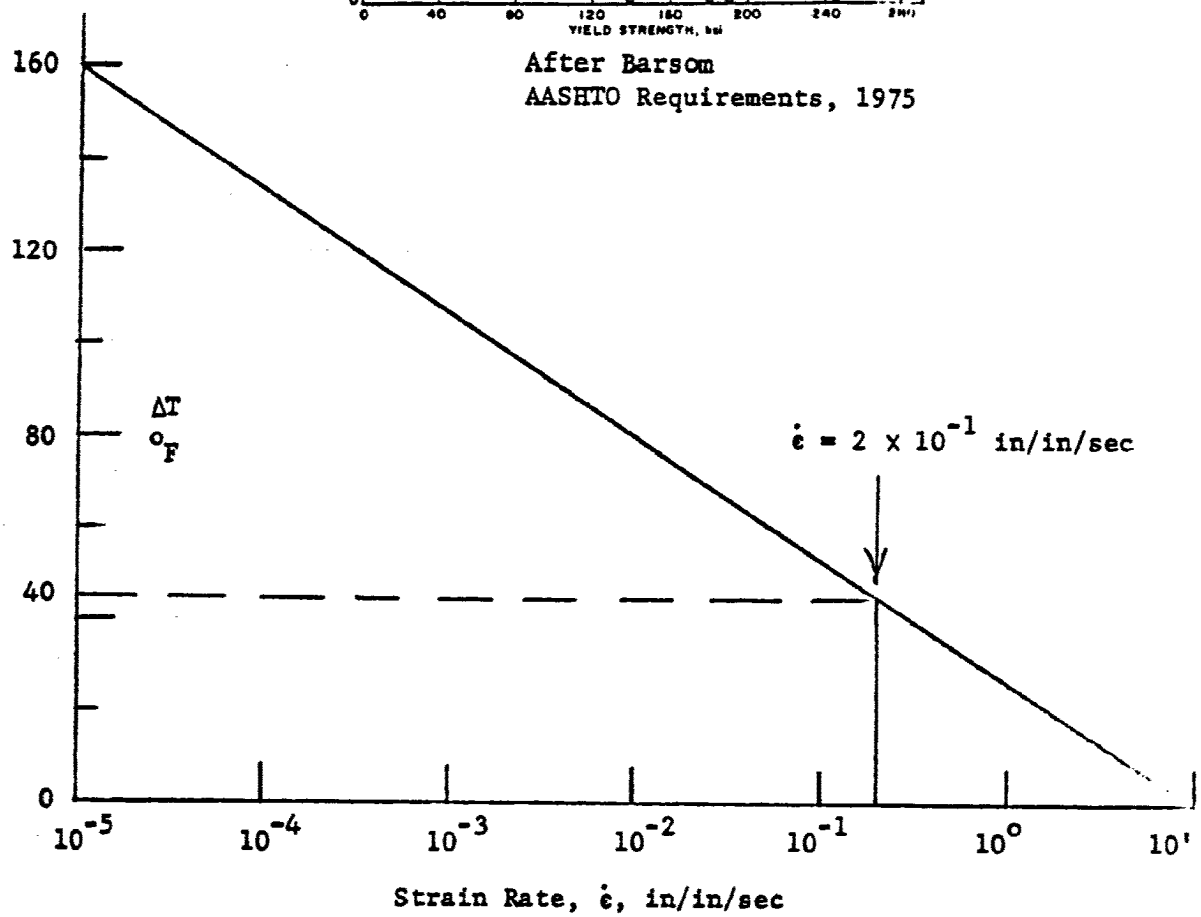

Fig. 2a Temperature Shift for Strain Rates Between Slow (10^{-5}) and Dynamic (10')

Development of the AASHTO fracture-toughness

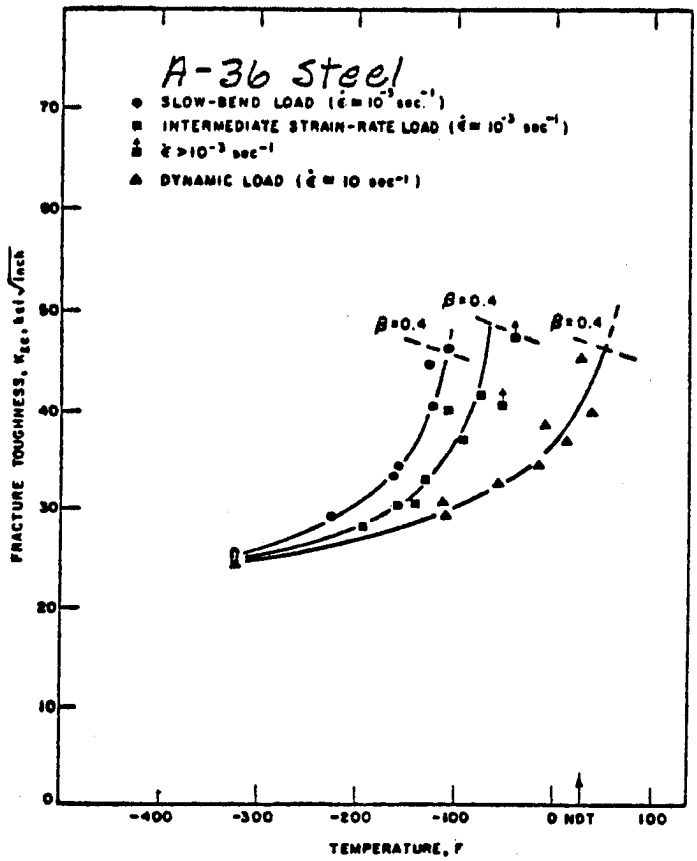

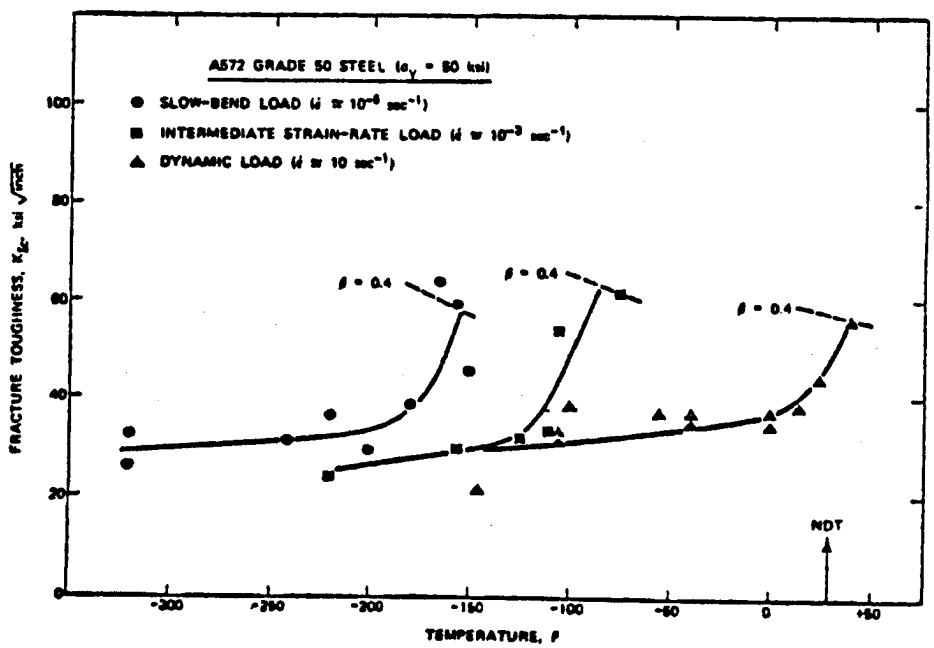

After Barsom

Fig. 8b

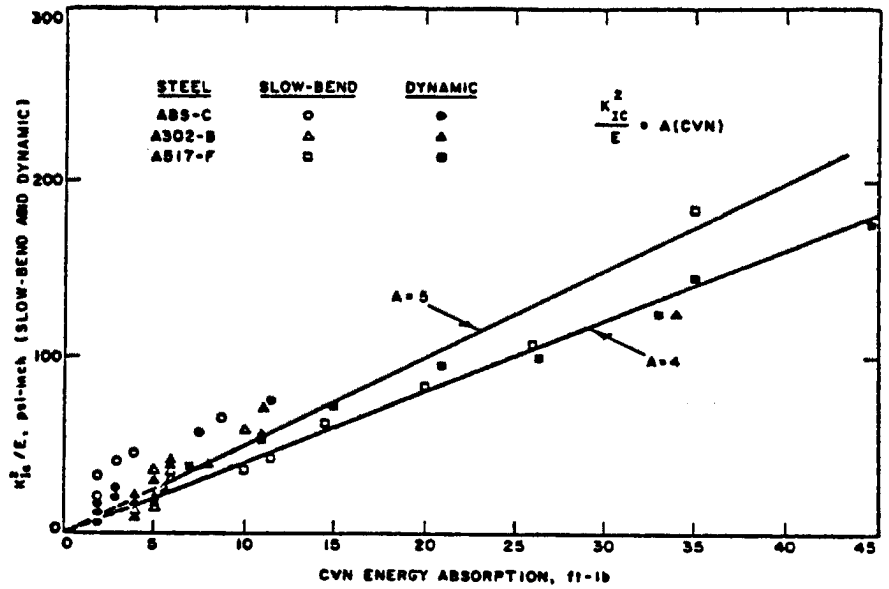

After Barsom

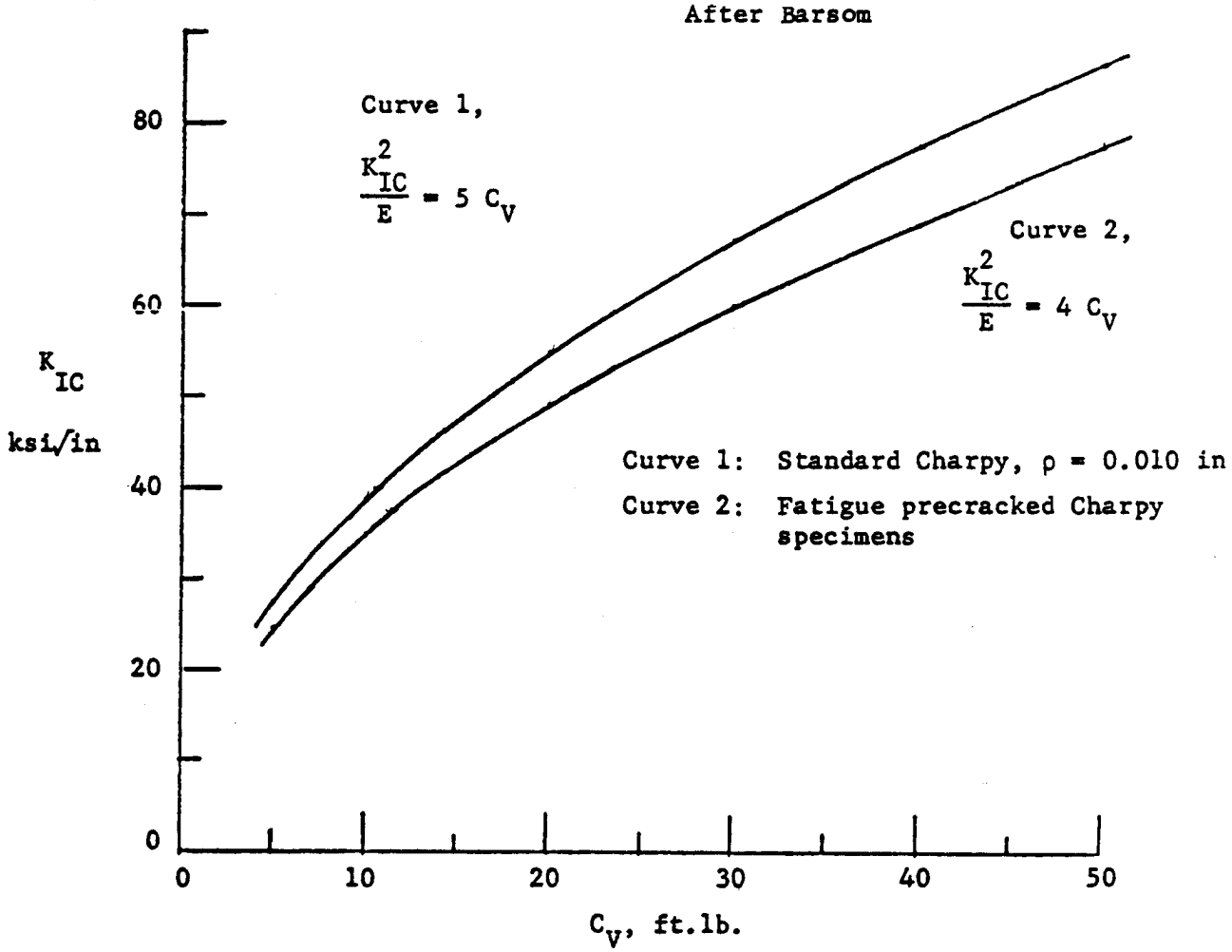

Fig. 3 Relation Between Energy in a Charpy Type Test and K_{IC}. Same time to fracture in both tests.

III. E-P Structural Analysis (continued)

C. Approximation using L.E.F.M. deformation (after Riccardella and Swedlow, HSST T.R. 13, 1973).

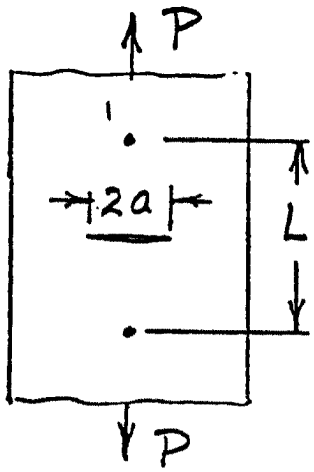

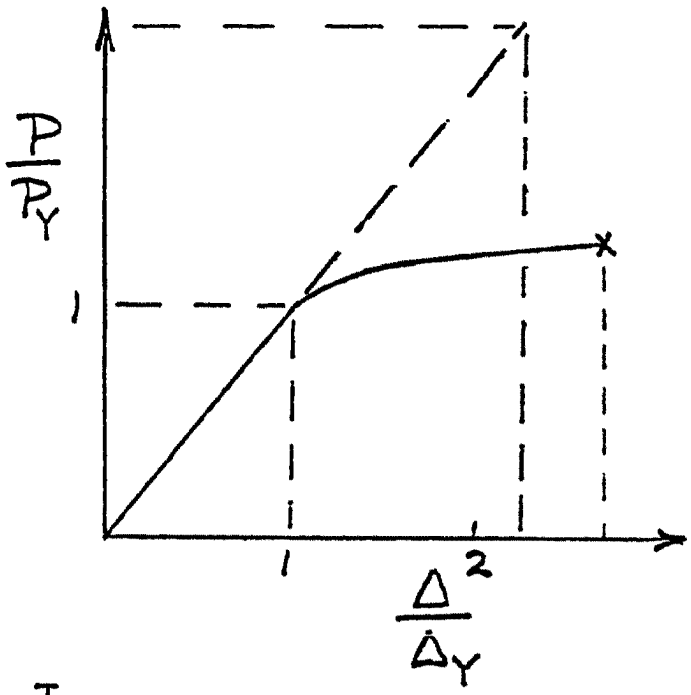

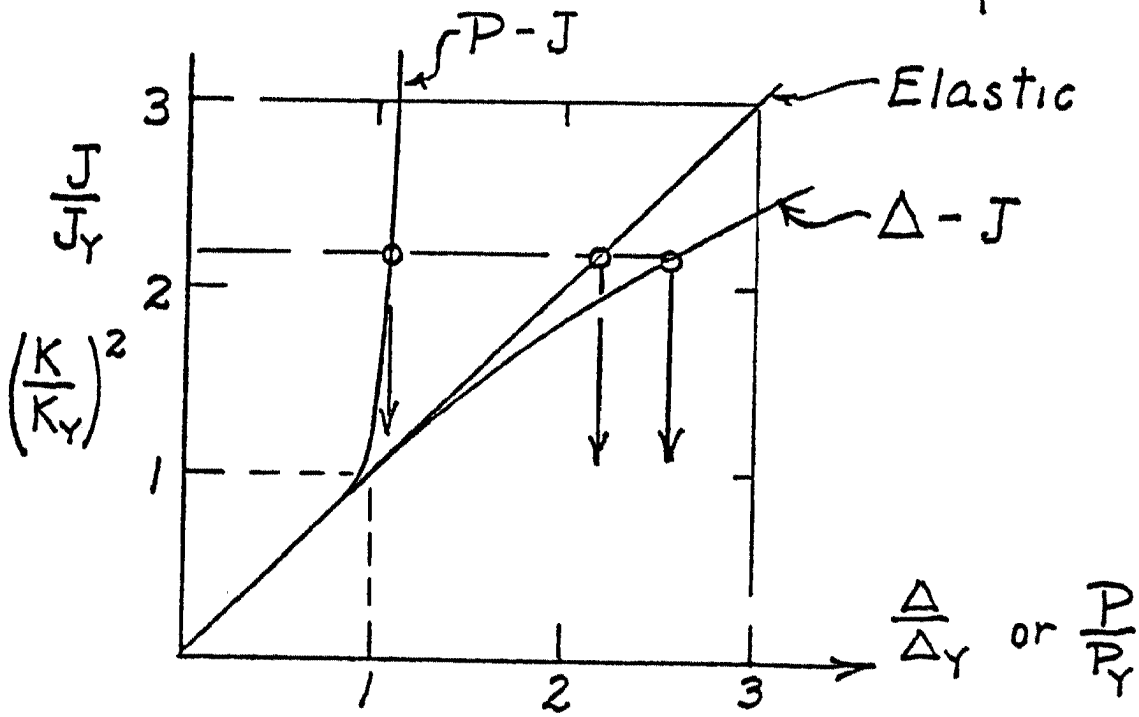

#9

arl

MR. BAUM: Mr. Sam Brown, Vice President of Power Station Engineering and Construction, will make a statement.

MR. BROWN: I'm Sam C. Brown, Jr., Vice President of Power Station Engineering and Construction, VEPCO.

In summary we have shown that the designs of the steam generator and reactor coolant pump supports are safe and comply with the requirements of all applicable codes and standards.

It has been shown that the design of the structures complies favorably with most recent technical requirements though the structures were of necessity designed several years ago.

We have shown that the repaired welds meet the applicable non-destructive test standards. Magnetic particle inspection has shown all the welds to be free of rejectable weld defects. Our ultrasonic test program has shown the base metal associated with the welds to be free of defects such as lamellar tears.

Although not an original design requirement, we have addressed the subject of brittle fracture and we find that there is ample conservatism in material properties and acceptable structural flaw sizes to dispel concern in this area.

Based on the above we believe the structures are

1 safe and acceptable for the intended application.

2 I would like to turn the meeting back over to

3 Mr. Ashby Baum.

4 MR. BAUM: Bob, that concludes our presentation.

5 I think we want to take a break and then take questions

6 the Staff may have.

7 MR. FERGUSON: We would like to take a break now

8 and we would like the Staff to come back at a quarter after

9 11:00, and we would like 15 minutes for the Staff to caucus

10 and then we will reconvene this meeting at 11:30 with

11 everyone.

12 (Recess.)

13 MR. OLMSTEAD: I am Bill Olmstead of the Executive

14 Legal Director, and have been asked by the Staff to

15 reemphasize things that we have told Sun Ship Building

16 and VEPCO counsel before.

17 That is that the Staff does not intend to take a

18 position on the pending litigation between VEPCO and Sun

19 Ship Building. The Staff will make its Safety Evaluation

20 Report as required and to the extent some of these matters

21 impact on that report, it will be contained within that

22 report.

23 We prefer insofar as possible to maximize the

24 efficiency of the Staff by avoiding conflicts in pending

25 litigation, as I'm sure you can understand.

With that reemphasis, I will turn the meeting over to Mr. Ferguson, who has clarifying questions.

MR. FERGUSON: We would like this information documented as part of the application.

Do you have any plans now to do that?

MR. BAUM: We haven't made any plans, Bob. You are talking about the transcript that has been made here today. You want that part of the license application?

MR. FERGUSON: Yes, either that or a separate report which has the material in it pertinent to the Safety Evaluation.

MR. BAUM: We have no objection to making it available.

I was trying to think of a way we could do it with the minimum amount of paper work.

When you enter it into the license application, or FSAR, there are a substantial number of copies, as you well know. If that is the way we want it, we will do that.

MR. FERGUSON: That is the way. Do you have any idea?

MR. MAUPIN: Why can't we hold under consideration the question of what is the most efficient way to get this information into the FSAR?

MR. FERGUSON: We would like it in the record of the application, anyway.

ar4

1 MR. BAUM: Maybe we can do it by reference, but
2 we will come up with a way that is satisfactory to you.
3 MR. FERGUSON: With regard to additional
4 questions, the Staff does not have any additional questions
5 at this time.
6 We would like to give it some consideration and
7 we have a feel for the information that you will be
8 providing in your documentation.
9 If we come up with questions that indicate clearly
10 that something additional should be put in, we will get
11 those to you as soon as possible.
12 Otherwise, our questions will come after we have a
13 chance to review the written material and see what it says.
14 With that, I guess we can -- we would also, to
15 the other people here, Sun Ship, Commonwealth, I guess,
16 Mrs. Allen, you are sitting in for Mrs. Arnold -- we
17 would welcome any comments in writing from any of the parties.
18 We prefer they be directed from the Staff and
19 again be as specific as possible.
20 With that, I guess we will adjourn the meeting.
21 (Whereupon, the meeting was adjourned.)
22
23
24
25

end 9

ce-Federal Reporters, Inc.

Appendix 5A
ATTACHMENT 1

NRC QUESTIONS AND VEPCO RESPONSES SUBSEQUENT TO THE VEPCO PRESENTATION OF APRIL 13, 1976

Intentionally Blank

ATTACHMENT 1 TO APPENDIX 5A
NRC QUESTIONS AND VEPCO RESPONSES SUBSEQUENT TO THE VEPCO PRESENTATION OF APRIL 13, 1976

Because Appendix 5A is a transcript of a meeting, the responses to NRC questions relating to that meeting cannot be merged into Appendix 5A itself. Consequently, these comments and their responses are attached as originally submitted.

Question 1

For each postulated break location in the reactor coolant system, identify the location, state the flow area (sq. in.), provide a sketch of the associated pipe restraint, and discuss the direction and envelope of pipe motion. If different break areas at any location have been used for certain analysis, indicate the alternative break areas used, the analysis in which they were used, and the basis for selecting the alternative break area.

Response

See Table 1.

Question 2

Supplement Vepco's April 13, 1976, presentation regarding the steam generator lower support and the reactor coolant pump support with the following information:

1. Provide design allowable stress limits used in the "Z" short transverse direction for normal, upset and faulted conditions. Provide the actual calculated maximum stresses in this direction for the normal, upset and faulted conditions and demonstrate that these values have included residual stresses.
2. Dr. Corten indicated that his fracture toughness calculation assumed a through thickness allowable stress of approximately 17 ksi. Dr. Goldstein indicated the current code allowable stresses in this direction are approximately 20 ksi. Confirm that there are no operating stresses in the through thickness direction greater than 17 ksi.
3. Describe the postulated pipe break identified by number in summary tables *Comparison of Maximum Beam Stresses to Design Criteria* and *Through Transverse Stresses at Member Correction Welds* (i.e., Break Nos. 7, 4, 2, 12). Also provide the break flow area used in these analyses.

Response

1. Normal, upset, and faulted condition allowable stress limits, as defined in ASME III, Subsection NF, are not applicable to the design of the steam generator lower supports and the reactor coolant pump supports for North Anna Units 1 and 2, since the design of these

supports preceded the first issue of ASME III, Subsection NF by several years. Further, the design criteria used for these supports did not require any reduction in allowable tension stress limits in the short transverse (Z) direction.

The design criteria used for the North Anna Units 1 and 2 steam generator lower and reactor coolant pump supports combined the effects of dead weight, design-basis earthquake, and pipe rupture loads for the design condition. This load combination is equivalent to the faulted condition of ASME III, Subsection NF, for current designs. Since the design condition used for the North Anna supports resulted in maximum calculated stresses which, in turn, were compared to and found to be below a conservative allowable stress (0.9 × yield), no analysis was performed for lesser combinations of loads, such as operating-basis earthquake, which would be equivalent to the upset condition of ASME III, Subsection NF. However, for comparison purposes, the allowable primary tension stress limits in the short transverse (Z) direction, provided in ASME III, Subsection NF, are as follows:

Condition	Material	Short Transverse (Z) Allowable Stress, ksi
Normal	SA-36	10.8
Upset		10.8
Faulted		20.3
Normal	SA-572	12.6
Upset		12.6
Faulted		21.0

If operating condition stresses had been calculated in the original design, they would have been compared to a working stress allowable of 0.6 × yield. Even for the faulted condition, the short transverse stresses are below this value.

However, again for comparison purposes, for the North Anna supports, the maximum calculated stresses in the short transverse direction occur in A-36 material and are:

Normal - 3.00 ksi

Upset - 8.82 ksi

Faulted - 12.54 ksi

The above normal and upset condition stresses include the effects of thermal and pressure loop expansion loads and are conservatively added to the stress summation for comparison to primary stress allowables. The current ASME III Code (NF 3231.1) permits an allowable base of three times the primary stress limit when such secondary effects are considered, since such loads are self-limiting.

Past and current industry practice does not include residual stresses in these values. Unquantified stresses, such as residual stresses, are accounted for in the codes when working allowable stresses are established. Indeed, it would be counter to good engineering practice for the designer to add residual stresses to primary stresses in establishment of the size of members. Such stresses are self-limiting in character, and if they were to be considered, they would be comparable to free-end displacement type stresses (ASME III, NF-3231.1) and as such would be compared to an allowable of three times the primary tensile stress limit when combined with mechanical loads for the normal and upset conditions (ASME III, NF-3231.1).

2. As shown in the response to Question 2, Item 1 above, operating condition stresses in the through thickness direction are substantially less than the 17 ksi used by Dr. Corten in his fracture toughness calculations.

3. The area of the pipe breaks used to derive the forcing functions applied to the support members mentioned in the summary tables is mentioned below:

Break Number	Location of Break	Type of Break	Break Opening Area (ft^2)
2	RPV inlet nozzle	Guillotine	4.125
4	Steam generator nozzle	Guillotine	5.24
7	Steam generator inlet elbow on the intrados	Split	4.9086
12	Loop closure weld in crossover leg	Guillotine	5.24

Question 3

Regarding the North Anna Units 1 and 2 steam generator and pump support members, provide the following information:

1. The specifications and supplementary requirements, if any, to which the materials were ordered.

2. The size and shapes of material ordered.

3. The number of suppliers involved.

4. The number of heats of material used.

5. The status of heat traceability maintained during fabrication and repair.

6. A summary of actual mechanical and chemical test data (from material certifications) for all heats of material used in fabrication.

Response

All main welded members on the North Anna Units 1 and 2 steam generator lower and reactor coolant pump supports are structural shapes of the wide-flange beam type. Based on material certification data provided by the fabricator:

1. The ASTM material specifications to which the members were procured are:

   a. ASTM A 36-69, *Standard Specification for Structural Steel*.

   b. ASTM A 572-68, *Standard Specification for High-Strength Low-Alloy Columbium-Vanadium Steels of Structural Quality.*

   During repair of the Unit 1 steam generator lower supports, certain welded sub-assemblies were prefabricated and used to replace portions of the original materials. In these prefabricated sub-assemblies, some ASTM A 572-70A material was utilized for reasons of availability.

   Ultrasonic inspection of material 3 in. or greater in thickness was specified as a supplemental requirement.

2. The size and shape designations for the members:

   W14 x 605.

   W14 x 426.

   W14 x 176 (reactor coolant pump supports only).

   W14 x 142 (steam generator lower supports only).

3. Bethlehem Steel Corporation supplied the members used in the original fabrication and repair of the support structures.

4. The members used in fabrication and repair of the support structures are comprised of 20 heats of materials, as shown on Tables 2, 3, 4 and 5.

5. Although not required by contract, the original fabricator provided partial material traceability by marking each material certification with information regarding the type of support, unit (North Anna 1 and 2), and fabrication piece number. The small quantity of repair members (see Response to Question 3, Item 1, above) were physically marked for identification.

6. A summary of mechanical and chemical test data from the mill certifications for the members in the supports is contained on Tables 2, 3, 4 and 5.

   A detailed review of chemical analysis and hardness tests performed on the Unit 2 Cubicle C Reactor Coolant Pump support back weldment revealed two W14 x 176 lb vertical support

members conforming to the chemical and physical requirements of ASTM A242, Type 1. The specific material test data are listed in Table 6. An evaluation of the operating temperatures for these supports in conjunction with the mechanical properties demonstrates that the material possesses adequate toughness for the application.

Question 4

Regarding the longitudinal CVN data reported for four heats of A-36 steel used in the supports, provide the following information:

1. The size and shape material from which specimens were removed.
2. If sufficient test material is available, provide CVN values in the short-transverse direction for these heats of material. Three specimens from each heat at 80°F and at 125°F are considered adequate for this purpose.
3. If test material is available from other heats used in fabrication of the supports, provide additional CVN data in both longitudinal and short transverse direction to increase the fracture toughness data base for these materials.

Response

1. The four original samples charpy tested by Vepco and reported to the NRC were designated "AB," "CD," "F2A," and "W96." A complete description of these materials is found in Table 7.
2. The four original samples of material were charpy V-notch tested at 80°F and 125°F in the short transverse direction (through thickness direction) to supplement the information obtained by the longitudinal direction testing that was previously provided to the NRC. Three specimens from each sample were tested at 80°F and three from each sample at 125°F. The results are presented in Table 8.
3. The criteria applied to establish the availability of base metal from the supports for testing are: (1) the material must represent a primary load carrying member, (2) the material must be traceable to that portion of a structure from which it was removed to allow correlation to a known piece number(s) and thereby a heat number(s), and (3) the sample must be large enough and thick enough to obtain specimens for testing that would produce meaningful data.

   An analysis of the scrap material available from both Unit 1 and Unit 2 structures has shown the only material that will satisfy the criteria stated above are the ASTM A-36 W14 x 426 lb beams from pieces 21 through 26 of the Unit 1 steam generator structures. Further analysis has shown that three heats of the 426 lb beams were used for these six piece numbers in all six steam generator cubicles (Units 1 and 2). The three available heats are 182C535, 182C174, and 171C866, and as shown in response to Question 4, Item 1 above, at least two

of these heats have been tested previously. Only nine heats (total) of ASTM A36 W14 x 426 beams were used in all six steam generator and all six RC pump structures. The three heats available for testing represent over 30 percent of the total linear feet of 426 lb beams in all structures. The 426 lb beams are significant for test purposes as they are the primary load carrying beams in the steam generator support structures, and represented the second largest footage of load carrying beams in the RC pump structures (being second only to the smaller ASTM A-36 W14 x 176 beams). As noted in response to Question 4, Item 5 above, traceability of heats is to piece number(s); further identification of individual heats must be by chemical analysis. A review of the chemical analyses of the three heats available for charpy testing has shown that heat 182C535 can be identified; however, heats 182C174 and 171C866 cannot be separated one from the other by chemical analysis techniques.

To provide a higher probability that some samples of both heats 182C174 and 171C866 were tested, Vepco has taken base metal samples for charpy tests from 11 additional identifiable locations (piece number 21 through 26) as represented by scrap pieces of 426 lb beams from the Unit 1 steam generator supports. Chemical analysis of these samples shows two to be heat 182C535, eight to represent heat 182C174 and/or 171C866, and one sample to be one of three heats. Charpy testing was accomplished in both the longitudinal- and short- transverse directions at test temperatures of 80°F and 125°F. Three charpy specimens were tested in both directions at both temperatures making a total of 12 charpy specimens per sample tested. The specific data is presented in Table 9.

Question 5

Regarding the two core samples removed from North Anna Unit 2 support weldments that reportedly showed evidence of lammellar tearing, state whether the weldments in question were subjected to ultrasonic examination prior to the core sample removal and provide the test results, if any.

Response

The welds were not subjected to ultrasonic examination prior to core sample removal because the ultrasonic examination of selected high stress welds was not performed until all examinations by the magnetic particle (MT) method had been successfully completed. The core samples were removed during the MT examinations and the cavities caused by such samples were subsequently weld repaired and subjected to MT examination. The two welds that were completed and repaired were not included in the group of welds selected for ultrasonic examination because they were not designated as “high stressed” welds.

Question 6

Provide the results of your review of the consequences of lower support member failure(s) going from several members to the entire structure, for the steam generator supports.

Response

The April 13, 1976 presentation described the results of an analysis that arbitrarily "disabled" one full interior corner of the steam generator support frame. The load/stress redistribution exhibited was intended to amplify the redundant nature of the structure. More detailed stress summaries for the "disabled" corner example in the same format as the response to Question 7 are provided in Table 10.

It is important to note that this review was intended to emphasize a characteristic of these structures, not to chart a potential progression of structural failure, beam by beam. Nor was it necessary to apply rigorous analysis methods for any one or all possible sequence or combinations of arbitrary member failures. Given the number of beams, the number of loading conditions, and the time varying nature of the loads, any effort to evaluate such a progression would very quickly become unphysical because the input load/displacements are based upon an integral system dynamic analysis. Further, the number of possible permutations in terms of order of "failure" are extremely large. A permutation calculation indicates more than 5000 such sequences for a single seven element interior corner section. This such number, for the first corner only, is a minimum, since many more of the 100 or so elements of the frame are involved in such an evaluation (1001 sequences) before the entire structure can be considered to have failed.

In summary, such an analysis, were it to be performed, would not provide any meaningful results. As Vepco demonstrated in the April 13, 1976 presentation, the North Anna supports were designed and repaired in accordance with all applicable design criteria, and with the modifications described in Section 5.5.9, they will safely perform their intended function. This is further illustrated by the stress levels provided in the response to Question 7. It is also shown that the supports compare favorably with even the latest applicable criteria for nuclear supports.

Question 7

Provide a stress summary for each of the steam generator lower support members and reactor coolant pump lower support members due to static, seismic (design-basis earthquake and operating-basis earthquake), and controlling loss-of-coolant accident (LOCA) cases loadings and the method of stress combination.

Response

Stress summaries for higher stressed members of both steam generator lower, and reactor coolant pump supports are provided in Table 11. Dead weight, seismic, and controlling LOCA (for each member) are given. As indicated in our response to Question 2, no analysis was performed for lesser combinations of loads, such as operating-basis earthquake, which would be equivalent to the upset condition of ASME III, Subsection NF. Stresses due to operating-basis earthquake, however, would be equal to approximately 90% of design-basis earthquake stresses,

indicated in Tables 10 and 11, based on a comparison of component interfaces loads developed from displacement data supplied by Westinghouse.

Since these supports consist of in the excess of 150 individual members, a computer stress tabulation of all members for all load cases was not maintained. Rather a procedure was used to isolate members whose nominal stress values exceed defined screening limits for each load type. Members below this screening limit met the design allowables with conservative margin and were not tabulated in order to reduce the size of the data base requiring more rigorous evaluation. The members identified in Table 11 by footnotes a, b, c, d, and e required a more detailed evaluation than the very conservative envelope approach.

Stress summaries were generally performed conservatively by absolute summation of maximum element stresses without regard to location in the member. When this very conservative envelope approach did not document adequate design margin, stresses were added by considering summations at consistent locations in the members as indicated in Table 11.

The purpose of the first stress summation in the stress review procedure is to eliminate from subsequent, more vigorous review as many members as possible with a minimal amount of data collection and tabulation through a number of conservative simplifications. The initial summation consists of the worst end seismic and deadweight stresses and one maximum and one minimum (enveloped) LOCA stress chosen from the maximum and minimum LOCA stresses due to all LOCA's under consideration. The enveloped LOCA stress at each member end is summed with the worst end seismic and deadweight stresses without regard to member cross-sectional quadrant, and those members exceeding stress screening limits are subjected to a second more rigorous stress summation. This second summation combines consistent (non-enveloped) LOCA stresses and seismic and deadweight stresses at each member end.

Table 1
REACTOR COOLANT SYSTEM BREAK LOCATIONS AND SITE FOR FSAR ANALYSES

Analysis	Break Type	Break Location (s)	Break Size	Justification of Break Type and Location	Justification of Break Size	Analysis Reference
Containment pressure and temperature analysis	Guillotine	RPV nozzle inlet	1188 in.^{2}	WCAP 8172	Section 6.2.1.3.1	Section 6.2.1.1
		RPV nozzle outlet	1320 in.^{2}	WCAP 8172	Section 6.2.1.3.1	Section 6.2.1.1
Steam generator subcompartment pressure analysis	Single ended split	Hot leg	660 in.^{2}	WCAP 8172	Section 6.2.1.1.2	Section 6.2.1
	Single ended split	Hot leg	660 in.^{2}	WCAP 8172	Section 6.2.1.1.2	Section 6.2.1.3.2 Section 6.2.1.1.2.2
Reactor cavity subcompartment pressure analysis	Limited displacement guillotine	RPV nozzle outlet	178 in.^{2}	Section 6.2.1.1.2 WCAP 8172	Section 6.2.1.1.2	Section 6.2.1.3.2 Section 6.2.1.1.2.2
		RPV nozzle outlet	150 in.^{2}	Section 6.2.1.3.2 WCAP 8172	Section 5A.4.6	Section 6.2.1.3.2

Table 1 (continued)

REACTOR COOLANT SYSTEM BREAK LOCATIONS AND SITE FOR FSAR ANALYSES

Analysis	Break Type	Break Location (s)	Break Size	Justification of Break Type and Location	Justification of Break Size	Analysis Reference
Pressurizer subcompartment analysis	Guillotine	Spray line	18.6 in.^{2}	Section 3A.46	b	Section 6.2.1
		Surge line	197 in.^{2}	Section 3A.46	b	Section 6.2.1
		Surge line	197 in.^{2}	Section 3A.46	b	Section 6.2.1.3.2 Section 6.2.1.1.2.2
RPV support analysis	Limited displacement guillotine	RPV nozzle outlet[c]	178 in.^{2}	WCAP 8172	Section 6.2.1.1.2	Appendix 5A
		RPV nozzle inlet[d]	144 in.^{2}	WCAP 8172	Section 5A.4.6	Appendix 5A
	Guillotine	Cold leg break - outside biological shield[e]	W to provide	WCAP 8236 and Section 5A.9	WCAP 8236 and Section 5A.9	Section 5A.9
ECCS analysis (large break)	Guillotine	Cold leg break	DECLG with discharge coefficients of 1.0, 0.6 and 0.4	WCAP 8573 NP	WCAP 8573 NP	Section 15.4.1

b. Largest break postulated in that particular pipe.
c. This break is used to calculate asymmetric pressure loading on RPV.
d. This break is used to calculate RPV internals loading.
e. This break is used to calculate fuel assembly hydraulic forcing functions.

Table 1 (continued)
REACTOR COOLANT SYSTEM BREAK LOCATIONS AND SITE FOR FSAR ANALYSES

Analysis	Break Type	Break Location (s)	Break Size	Justification of Break Type and Location	Justification of Break Size	Analysis Reference
ECCS analysis (small break)	Small break	Cold leg break	3, 4 and 6 in. equivalent diameter	WCAP 8356 NP	WCAP 8356 NP	Section 15.3.1
Containment pressure and temperature analyses	Guillotine	Pump suction	1510 in.^{2}	Section 6.2.1.3.1	Section 6.2.1.3.1	Section 6.2.1.3.1
		Surge line	197 in.^{2}	Section 6.2.1.3.1	Section 6.2.1.3.1	Section 6.2.1.3.1
		RPV nozzle inlet	1188 in.^{2}	Section 6.2.1	Section 6.2.1	Section 6.2.1
		Pump suction	1510 in.^{2}	Section 6.2.1	Section 6.2.1	Section 6.2.1
		RPV nozzle outlet	1320 in.^{2}	Section 6.2.1	Section 6.2.1	Section 6.2.1
	.6 guillotine	RPV nozzle outlet	792 in.^{2}	Section 6.2.1	Section 6.2.1	Section 6.2.1
	.326 guillotine	RPV nozzle outlet	430 in.^{2}	Section 6.2.1	Section 6.2.1	Section 6.2.1

Table 2
STEAM GENERATOR LOWER SUPPORTS - UNIT 1 HEATS OF MATERIAL

Description	Material[a]	Heat Number	Yield Point	Tensile Strength	Elongation Percent	Elongation In.	Percent Reduction in Area	Hardness BHN	Bend	C	Mn	P	S	Si	V	N
W 14 x 605	A	171C560	60,000	88,500	24.5	2	58.6	187	OK	.19	1.04	.019	.033	.23	.07	.007
W 14 x 605	A	182C087	58,500	84,500	25.0	2	62.3	156	OK	.20	1.20	.016	.021	.22	.07	.011
W 14 x 605	A	172C497	56,500	83,500	24.5	8	58.1	163	OK	.21	1.17	.015	.029	.22	.06	.008
W 14 x 605	A	123C349	63,000	91,500	25.0	8	62.6	187	OK	.18	1.18	.008	.012	.20	.07	.015
W 14 x 426	B	171C871	44,280	70,316	28.1	8	53.7	156	OK	.21	1.15	.011	.020	.05		
W 14 x 426	B	171C866	44,331	72,733	28.0	8	51.5	156	OK	.24	1.11	.016	.019	.05		
W 14 x 426	B	182C174	46,493	76,296	27.9	8	52.9	163	OK	.21	1.13	.012	.018	.04		
W 14 x 426	B	182C172	42,598	70,868	29.2	8	49.8	170	OK	.24	1.16	.015	.020	.05		
W 14 x 426	B	182C159	44,924	74,290	29.3	8	60.9	163	OK	.26	1.20	.011	.022	.06		
W 14 x 426	B	182C178	43,853	72,418	28.9	8	57.3	163	OK	.24	1.19	.013	.021	.04		
W 14 x 426	B	182C535	40,471	67,645	30.5	8	54.9	149	OK	.22	1.10	.014	.031	.03		
W 14 x 426	B	172C586	43,839	70,921	29.0	8	56.5	163	OK	.20	1.15	.012	.018	.05		
W 14 x 426	C	517J1106	50,980	76,000	22.0	8			OK	.18	1.16	.009	.020	.03	.085	.008
W 14 x 426	C	517J1058	61,690	85,010	20.0	8			OK	.21	1.20	.005	.016	.03	.097	.013
W 14 x 426	B	181C686	54,846	79,233	21.0	8	51.1	179	OK	.18	1.06	.011	.023	.14		
W 14 x 426	B	182C150	47,440	75,883	27.5	8	45.3	143	OK	.24	.81	.011	.023	.08		

a. Material A - ASTM A572-68 Grade 42 Ty 4 KLD, stress relieved at 1,100°F furnace cooled.
Material B - ASTM A36-69, stress relieved at 1,100°F furnace cooled
Material C - ASTM - A572-70A GR50A (repair replacement members)

Table 3
STEAM GENERATOR LOWER SUPPORTS - UNIT 2 HEATS OF MATERIAL

Description	Material[a]	Heat Number	Yield Point	Tensile Strength	Elongation Percent	Elongation In.	Percent Reduction in Area	Hardness BHN	Bend	C	Mn	P	S	Si	V	N
W 14 x 605	A	182C087	b													
W 14 x 605	A	123C349	b													
W 14 x 605	A	171C560	b													
W 14 x 605	A	172C497	b													
W 14 x 426	B	171C866	b													
W 14 x 426	B	171C871	b													
W 14 x 426	B	182C172	b													
W 14 x 426	B	182C174	b													
W 14 x 426	B	182C178	b													
W 14 x 426	B	172C586	b													
W 14 x 426	B	182C159	b													
W 14 x 426	B	182C535	b													
W 14 x 142	B	182C150	b													
W 14 x 142	B	181C686	b													

a. Material A - ASTM A572-68 Grade 42 Ty 4 KLD, stress relieved at 1,100°F furnace cooled.
Material B - ASTM A36-69, stress relieved at 1,100°F, furnace cooled.

b. Same as steam generator lower support - Unit 1 data (see Table 2).

Table 4
REACTOR COOLANT PUMP SUPPORTS - UNIT 1 HEATS OF MATERIAL

Description	Material[a]	Heat Number	Yield Point	Tensile Strength	Elongation Percent	Elongation In.	Percent Reduction in Area	Hardness BHN	Bend	C	Mn	P	S	Si	V	N
W 14 x 605	B	182C090	45,000	76,250	27.5	8	55.2	143	OK	.22	1.07	.012	.024	.27		
W 14 x 426	B	171C871	b													
W 14 x 426	B	171C866	b													
W 14 x 426	B	182C159	b													
W 14 x 426	B	182C174	b													
W 14 x 426	B	172C963	44,081	71,180	29.0	8	55.4	170	OK	.24	1.14	.012	.027	.06		
W 14 x 176	B	182C156	39,766	64,775	30.5	8	59.1	137	OK	.22	.65	.012	.020	.05		
W 14 x 176	B	182C154	41,815	66,869	29.5	8	56.4	143	OK	.23	.67	.010	.018	.07		

a. Material B - ASTM A36-69, stress relieved at 1,100°F furnace cooled.
b. Same as steam generator lower support - Unit 1 data (see Table 2).

Table 5
REACTOR COOLANT PUMP SUPPORTS - UNIT 2 HEATS OF MATERIAL

Description	Material[a]	Heat Number	Yield Point	Tensile Strength	Elongation Percent	Elongation In.	Percent Reduction in Area	Hardness BHN	Bend	C	Mn	P	S	Si	V	N
W 14 x 605	B	182C090	c													
W 14 x 426	B	171C871	b													
W 14 x 426	B	171C866	b													
W 14 x 426	B	182C159	b													
W 14 x 426	B	182C174	b													
W 14 x 426	B	172C963	c													
W 14 x 176	B	182C156	c													
W 14 x 176	B	182C154	c													

a. Material B - ASTM A36-69, stress relieved at 1,100°F furnace cooled.
b. Same as steam generator lower support - Unit 1 data (see Table 2).
c. Same as reactor coolant pump support - Unit 1 data (see Table 4).

Table 6
MATERIAL FROM BACK WELDMENT UNIT NO. 2 RCP SUPPORT STRUCTURE
(CUBICLE C) MATERIAL MEETS ASTM A242 TYPE 1, 176 LB BEAM

Mechanical Test Data

Yield strength	58,000psi
Tensile strength	76,100 psi
Elong	32% in 2 in.
R.A.	70.6%

Charpy V-Notch Test Data
(Long Rolling Direct-Flange Section 1 1/4 in. thick)

Specimen Number	Temperature °F	Ft/lbs	MLE	Percent Shear
1	80	24	25	15
2	80	25	26	15
3	100	35	34	28
4	100	36	36	28
5	120	36	35	35
6	120	38	36	35
7	140	92	72	58
8	140	113	88	71
9	160	92	76	62
10	160	97	77	69
11	180	80	65	58
12	180	120	87	81

Chemical Analysis

Sample[a]	Vand	Nit.	Cb	C	Chr.	Ni	Man	Moly	Cu	Si	P	S
A	.01	.008	.01	.12	.59	.56	.87	.01	.29	.30	.11	.017
B	.01	.008	.01	.12	.58	.56	.88	.01	.35	.31	.11	.015
C	.01	--	--	.13	.58	.55	.88	>.02	.29	.34	.113	.020

a. Samples B and C removed from same beam (right beam looking in from back of structure).

Table 7
SPECIFIC DATA ON ORIGINAL FOUR HEATS CHARPY TESTED[a]

Reported heat designation (based on location removed from structure or unit)	Actual mill cert heat designation as traced from structure piece number	Most probable heat designation as determined by chemical analysis performed by Vepco	Form of material from which test specimen was removed	Location from which test specimen was taken
"AB"	182C535, 182C174, or 171C866	182C535	ASTM A36-69 test W 14 x 426 beam, specimen taken from 3 in. flange in the longitudinal rolling direction	Steam generator support unit 2, cubicle A, B, or C, corner middle level
"CD"	C9017, or A8225	A8225	ASTM A36-69 3 in. plate; specimen taken from longitudinal rolling direction	RC pump support unit 2, cubicle A, B, or C, bracket piece
"F2A"	182C535, 182C174, or 171C866	182C535	ASTM A36-69 W 14 x 426 beam; specimen taken from 3 in. flange in longitudinal rolling direction	Steam generator support unit 1, cubicle A, middle level, corner 2
"W96"	182C535, 182C174, or 171C866	182C174,[b] or 171C866	ASTM A36-69 W 14 x 426 beam; specimen taken from longitudinal direction in beam web (≈2 in. thick)	Steam generator support unit 1, cubicle C, middle level, corner 3

a. Upon review of additional scrap material at the site, and evaluation of additional chemical analyses of the samples, it appears that what was originally designated as four "heats" is three heats (two heats from 426 lb A36 beams and one heat from a 3 in. thick A36 plate). It was also determined, however, that a total of only nine heats of 426 lb beams were used in all structures.

b. These two chemistries are so close that analysis techniques are unable to differentiate between them. Chemistries that are very similar are the rule rather than the exception throughout the heats of 426 lb beams of A36 material used in these structures (see Table 2). Heat 182C535 can be differentiated by chemistry because it possesses a sulfur content (0.031) approximately 50 percent higher than that of the other heats (average 0.020).

Table 8

THROUGH THICKNESS C_V PROPERTIES OF THE ORIGINAL FOUR SAMPLES [a]

Specimen Designation and temperature of test	"AB" 80°F	"AB" 125°F	"CD" 80°F	"CD" 125°F	"W96" 80°F	"W96" 125°F	"F2A" 80°F	"F2A" 125°F
Ft/lbs	12	25	10	26	8	20	12	25
	16	27	13	30	11	35	14	26
	23	32	14	30	18	39	15	30
Mills.	20	35	14	35	10	28	19	35
Lat.	24	38	17	36	15	44	20	35
Exp.	30	40	18	39	26	50	18	43

a. Notch in the longitudinal rolling direction.

Table 9
CHARPY V TESTS DATA FOR ADDITIONAL A-36 SAMPLES

				Specimen #1			Specimen #2			Specimen #3			
Vepco Sample Number	Mil. Cert Heat # (4)	Test Direction	Test Temp °F	Ft-lbs	Mils Lat Exp.	% Shear	Ft-lbs	Mils Lat. Exp.	% Shear	Ft-lbs	Mils. Lat. Exp.	% Shear	Comment
1AM11F	182C174	L(2)	80	68	57	60	58	53	50	57	51	50	
1AM11F	or 171C866	L	125	73	62	70	79	66	70	38	41	50	
1AM11F		TT(3)	80	10	13	10	14	17	10	17	18	10	
1AM11F		TT	125	25	28	30	26	28	30	27	33	40	
1AM21F	182C174	L	80	61(61)	56(52)	50(50)	49(40)	47(39)	40(40)	19(22)	24(23)	30(30)	(xx) = Retest
1AM21F	or 171C866	L	125	73	65	70	82	73	70	72	62	70	
1AM21F		TT	80	20	21	20	13	15	10	11	13	10	
1AM21F		TT	125	18	27	40	20	25	30	17	23	30	
1AM41F	182C174	L	80	48	46	40	36	37	30	36	36	30	
1AM41F	or	L	125	101	81	90	64	59	60	81	59	70	
1AM41F	171C866	TT	80	17	24	10	12	18	10	14	18	10	
1AM41F		TT	125	24	32	40	24	32	40	23	31	30	
1BM11F	182C174	L	80	42	40	40	23	27	40	38	37	30	
1BM11F	171C866,	L	125	86	72	80	80	64	80	64	58	70	
1BM11F	or	TT	80	16	20	10	14	17	10	15	18	10	
1BM11F	182C535	TT	125	21	27	10	24	29	10	24	29	10	
1BM21F	182C174	L	80	71	58	80	74	62	80	31	29	20	
1BM21F	or	L	125	82	70	80	85	67	70	81	63	70	
1BM21F	171C866	TT	80	16	17	10	14	18	10	13	17	10	
1BM21F		TT	125	21	27	10	30	35	10	35	36	10	

Table 9 (continued)

CHARPY V TESTS DATA FOR ADDITIONAL A-36 SAMPLES

				Specimen #1			Specimen #2			Specimen #3			
Vepco Sample Number	Mil. Cert Heat # (4)	Test Direction	Test Temp °F	Ft-lbs	Mils Lat Exp.	% Shear	Ft-lbs	Mils Lat. Exp.	% Shear	Ft-lbs	Mils. Lat. Exp.	% Shear	Comment
1BM21W	182C174	L	80	32	34	30	31	32	30	33	33	30	
1BM21W	or	L	125	54	53	70	52	55	70	71	68	90	
1BM21W	171C866	TT	80	12	14	10	12	16	10	8	11	10	
1BM21W		TT	125	24	27	30	15	20	30	19	25	30	
1BM31F	182C535	L	80	68	63	60	72	61	60	55	52	50	
1BM31F		L	125	80	70	80	102	76	90	89	74	80	
1BM31F		TT	80	17	21	10	20	23	10	15	18	10	
1BM31F		TT	125	22	31	40	22	28	40	22	30	40	
1BM41F		L	80	47	42	30	58	52	40	53	48	40	
1BM41F	182C174	L(2)	125	48(91)	46(70)	40(80)	32(55)	35(50)	30(60)	104(87)	78(69)	90(80)	(xx) = Retest
1BM41F	or	TT(3)	80	20	23	10	22	23	10	20	22	10	
1BM41F	171C866	TT	125	22	26	30	25	28	30	20	22	20	
1CM21F	182C535	L	80	63	59	40	64	56	60	80	71	70	
1CM21F		L	125	92	73	90	38	75	100	94	73	90	
1CM21F		TT	80	14	23	20	20	22	40	15	26	30	
1CM21F		TT	125	28	34	50	32	38	70	36	44	90	
1CM22F	182C174	L	80	68	61	60	81	66	70	51	47	40	
1CM22F	or	L	125	82	67	80	83	67	80	47	50	50	
1CM22F		TT	80	15	18	30	15	18	30	9	11	10	
1CM22F		TT	125	24	29	30	26	30	50	26	30	50	

Table 9 (continued)

CHARPY V TESTS DATA FOR ADDITIONAL A-36 SAMPLES

				Specimen #1			Specimen #2			Specimen #3			
Vepco Sample Number	Mil. Cert Heat # (4)	Test Direction	Test Temp °F	Ft-lbs	Mils Lat Exp.	% Shear	Ft-lbs	Mils Lat. Exp.	% Shear	Ft-lbs	Mils. Lat. Exp.	% Shear	Comment
1CM32F	182C174	TT	80	22	26	30	18	22	30	20	25	30	No longitud-inal test samples taken
	or 171C866	TT	125	27	28	50	27	29	50	33	39	50	

Notes:

(1) All samples removed from ASTM A-36-69 W14 x 426 beams, 3” thick Flange except 1BM21W which was removed from a web ≈2" thick.

(2) L = Longitudinal rolling direction.

(3) TT = Through thickness direction (also called short transverse direction notch always in long transverse direct.

(4) Vepco chemical analysis - most probable heat direction.

Table 10
STRESSES IN STEAM GENERATOR LOWER SUPPORTS,
LOWER SUPPORT MEMBER FAILURE

Member Number [b, e]	Stress Due to Dead weight	Stress Due to DBE	LOCA Break Number	LOCA Stress	Total Stress
15	3.9	5.9	7	10.4	20.2 [a]
18 [c]	-	-	7	-	-
20 [c]	-	-	7	-	-
21	4.9	9.6	7	15.2	29.7
22	2.1	5.9	7	6.5	14.5 [a]
23	4.2	9.0	7	14.3	27.5
24	3.9	5.1	7	10.3	19.3 [a]
26	2.9	7.8	7	7.8	18.5 [d]
33	3.8	5.6	7	11.2	20.6
35	3.2	4.5	7	9.7	17.4 [d]
42	5.3	10.2	7	14.5	30.0 [d]
43	1.7	4.0	7	5.1	17.4 [a]
44 [c]	-	-	7	-	-
45 [c]	-	-	7	-	-
46	2.8	4.1	7	8.5	15.4 [a]

a. Component and total stresses adjusted to reflect stress at actual member end. All other component/total stresses not so noted conservatively reflect stresses at the nodes.
b. The members shown were chosen for inclusion in this table on the basis of satisfying one of the following conditions: (LOCA 20.0 ksi or Seismic 9.0 ksi or Dead weight 3.4 ksi). Since these supports consist of in excess of 150 individual members, computer stress tabulation of all members for all cases was not maintained. Rather, a procedure was used to isolate members whose nominal stress values exceed defined screening limits for each load type. Members below this screening limit met the design allowables with conservative margin and were not tabulated in order to reduce the size of the data base requiring more vigorous evaluation. The above arbitrary values do not represent individual stress limits, but are only used to screen-out members that do not require further evaluation. The sum of stresses for such screened-out members is less than the sum of these three values (32.4 ksi) and thus satisfy the design limit of 0.9Y yield.
c. Member removed to demonstrate redundancy.
d. Member derived from integral model even though individual component stresses are less than footnote b criteria.
e. The support members given in this table are shown in Figures 1 and 2.

Table 10 (continued)
STRESSES IN STEAM GENERATOR LOWER SUPPORTS,
LOWER SUPPORT MEMBER FAILURE

Member Number [b, e]	Stress Due to Dead weight	Stress Due to DBE	LOCA Break Number	LOCA Stress	Total Stress
47	3.7	5.4	7	11.0	20.1 [a]
49	5.5	10.8	7	13.1	29.4
55	3.3	10.6	7	10.2	24.0
57	2.0	11.7	7	6.0	19.7
58	5.4	7.9	7	14.6	27.9 [a]
59	4.6	9.0	7	12.1	25.7
60	2.1	3.7	7	5.6	11.4 [d]
64	5.1	6.7	7	13.7	25.5 [a]
67	4.3	6.8	7	11.5	22.6
75	6.0	8.2	7	16.8	31.0
79	5.4	9.6	7	14.0	29.0
80	2.6	12.5	7	7.9	23.0
83	6.2	9.5	7	16.5	32.2 [aa]
88 [c]	-	-	7	-	-
89	3.3	8.7	7	9.2	21.2 [d]
93	3.3	15.0	7	9.9	28.2 [a]

a. Component and total stresses adjusted to reflect stress at actual member end. All other component/total stresses not so noted conservatively reflect stresses at the nodes.

b. The members shown were chosen for inclusion in this table on the basis of satisfying one of the following conditions: (LOCA 20.0 ksi or Seismic 9.0 ksi or Dead weight 3.4 ksi). Since these supports consist of in excess of 150 individual members, computer stress tabulation of all members for all cases was not maintained. Rather, a procedure was used to isolate members whose nominal stress values exceed defined screening limits for each load type. Members below this screening limit met the design allowables with conservative margin and were not tabulated in order to reduce the size of the data base requiring more vigorous evaluation. The above arbitrary values do not represent individual stress limits, but are only used to screen-out members that do not require further evaluation. The sum of stresses for such screened-out members is less than the sum of these three values (32.4 ksi) and thus satisfy the design limit of 0.9Y yield.

c. Member removed to demonstrate redundancy. [d]Member derived from integral model even though individual component stresses are less than footnote b criteria.

d. The support members given in this table are shown in Figures 1 and 2.

Table 10 (continued)
STRESSES IN STEAM GENERATOR LOWER SUPPORTS,
LOWER SUPPORT MEMBER FAILURE

Member Number [b, e]	Stress Due to Dead weight	Stress Due to DBE	LOCA Break Number	LOCA Stress	Total Stress
98	5.2	8.3	7	13.8	27.3
210	9.2	4.1	7	8.4	20.7 [a]
211	5.0	8.2	7	13.7	26.9 [a]
212 [c]	-	-	7	-	-
213	4.0	5.8	7	11.9	21.7 [a]
28	4.3	6.4	7	11.8	22.6
31	3.6	6.3	7	10.7	20.6
66	4.1	6.8	7	10.9	21.8
68	3.5	6.3	7	9.3	19.1
78	4.0	7.6	7	11.1	22.7

a. Component and total stresses adjusted to reflect stress at actual member end. All other component/total stresses not so noted conservatively reflect stresses at the nodes.
b. The members shown were chosen for inclusion in this table on the basis of satisfying one of the following conditions: (LOCA 20.0 ksi or Seismic 9.0 ksi or Dead weight 3.4 ksi). Since these supports consist of in excess of 150 individual members, computer stress tabulation of all members for all cases was not maintained. Rather, a procedure was used to isolate members whose nominal stress values exceed defined screening limits for each load type. Members below this screening limit met the design allowables with conservative margin and were not tabulated in order to reduce the size of the data base requiring more vigorous evaluation. The above arbitrary values do not represent individual stress limits, but are only used to screen-out members that do not require further evaluation. The sum of stresses for such screened-out members is less than the sum of these three values (32.4 ksi) and thus satisfy the design limit of 0.9Y yield.
c. Member removed to demonstrate redundancy.
d. Member derived from integral model even though individual component stresses are less than footnote b criteria.
e. The support members given in this table are shown in Figures 1 and 2.

Table 11
STRESSES IN STEAM GENERATOR LOWER
AND REACTOR COOLANT PUMP SUPPORTS

Member Number [c]	Stress Due to Dead weight	Stress Due to DBE	LOCA Break Number [a]	LOCA Stress	Total Stress
210	3.2 [b]	6.4	7	23.8 [d]	30.2
211	7.8 [b]	13.4	7	16.5 [d]	29.9
212	3.7 [b]	5.6 [f]	7	11.5 [e]	20.8
213	5.1 [g]	10.3 [f]	7	15.7 [e]	31.1
133	0.1 [g]	13.0 [f]	2	20.6 [e]	33.7
148	0.1 [g]	2.3 [f]	12	20.7 [e]	23.1
149	0.1	9.8	2	14.3	24.2
155	0.3	9.4	12	17.0	26.7
156	0.3	9.3	12	18.2	27.8
157	0.1	9.5	2	22.6	32.3
158	0.2	9.5	2	21.1	20.9
159	0.1	12.5	2	14.4	27.0
160	0.1 [g]	9.9 [f]	2	17.7 [e]	27.7
161	0.0	11.4	12	19.8	31.2

a. Description of pipe ruptures:

Break Number	Description
1	RPV outlet nozzle guillotine
2	RPV inlet nozzle guillotine (The effect of RPV movement is included.)
3	Steam generator inlet nozzle guillotine
4	Steam generator outlet nozzle guillotine
5	Reactor coolant pump suction nozzle guillotine
7	50 degree elbow at the entrados split
12	Loop closure weld guillotine

b. Separate deadweight stress listed for reference only.
c. Value listed includes stresses due to LOCA, RPV movement, and dead weight at actual member-end locations. The support members given in this table a are shown in Figures 1 and 2.
d. Value listed includes stresses due to LOCA and dead weight at actual member-end locations. Corresponding seismic stress is unadjusted for conservatism.
e. Stress value listed due to LOCA at actual member-end locations.
f. Stress value due to DBE seismic event at actual member-end locations.
g. Stress value due to dead weight at actual member-end locations.

Table 11 (continued)
STRESSES IN STEAM GENERATOR LOWER
AND REACTOR COOLANT PUMP SUPPORTS

Member Number [c]	Stress Due to Dead weight	Stress Due to DBE	LOCA Break Number [a]	LOCA Stress	Total Stress
162	0.0	11.8	12	17.7	29.5
163	0.1 [g]	9.0 [f]	2	14.5 [e]	23.6
164	0.0 [g]	7.1 [f]	2	17.3 [e]	24.4
165	0.0 [g]	7.3 [f]	12	15.8 [e]	23.1
166	0.0 [g]	6.5 [f]	12	8.6 [e]	25.1
169	0.0	7.0 [f]	12	22.7 [e]	29.7
205	0.1	10.0	2	17.1	27.2
35	2.5	3.6	7	7.3	13.4
42	5.4 [b]	6.9 [f]	12	8.2 [e]	15.1
43	3.5	12.0	5	11.4	26.9
44	4.1	6.	7	12.7	22.9
45	5.3 [b]	5.8 [f]	7	20.8 [d]	26.6
46	5.5	8.7 [f]	7	16.4 [e]	30.6
47	5.6 [b]	8.7 [f]	7	20.6 [d]	29.3

a. Description of pipe ruptures:

Break Number	Description
1	RPV outlet nozzle guillotine
2	RPV inlet nozzle guillotine (The effect of RPV movement is included.)
3	Steam generator inlet nozzle guillotine
4	Steam generator outlet nozzle guillotine
5	Reactor coolant pump suction nozzle guillotine
7	50 degree elbow at the entrados split
12	Loop closure weld guillotine

b. Separate deadweight stress listed for reference only.
c. Value listed includes stresses due to LOCA, RPV movement, and dead weight at actual member-end locations. The support members given in this table a are shown in Figures 1 and 2.
d. Value listed includes stresses due to LOCA and dead weight at actual member-end locations. Corresponding seismic stress is unadjusted for conservatism.
e. Stress value listed due to LOCA at actual member-end locations.
f. Stress value due to DBE seismic event at actual member-end locations.
g. Stress value due to dead weight at actual member-end locations.

Table 11 (continued)
STRESSES IN STEAM GENERATOR LOWER
AND REACTOR COOLANT PUMP SUPPORTS

Member Number [c]	Stress Due to Dead weight	Stress Due to DBE	LOCA Break Number [a]	LOCA Stress	Total Stress
49	4.9	8.6 [f]	12	16.8 [e]	25.4
55	2.5	10.2	4	8.1	20.8
57	1.8	11.5	12	7.0	20.3
58	5.2 [b]	7.7	7	17.5	25.2
59	3.6	7.8	7	8.8	20.2
60	4.5	6.5	7	13.4	24.4
64	5.1	6.9	7	16.5	28.5
67	4.7	7.4	7	13.9	26.0
75	4.9	6.9	7	13.3	25.1
79	4.3	8.5	4	10.5	23.3
80	2.0	12.2	12	9.5	23.7
83	5.6 [b]	9.0	7	19.1 [d]	28.1
88	4.8	7.5	7	14.5	26.8
93	4.4	7.3	7	12.7	24.4

a. Description of pipe ruptures:

Break Number	Description
1	RPV outlet nozzle guillotine
2	RPV inlet nozzle guillotine (The effect of RPV movement is included.)
3	Steam generator inlet nozzle guillotine
4	Steam generator outlet nozzle guillotine
5	Reactor coolant pump suction nozzle guillotine
7	50 degree elbow at the entrados split
12	Loop closure weld guillotine

b. Separate deadweight stress listed for reference only.
c. Value listed includes stresses due to LOCA, RPV movement, and dead weight at actual member-end locations. The support members given in this table a are shown in Figures 1 and 2.
d. Value listed includes stresses due to LOCA and dead weight at actual member-end locations. Corresponding seismic stress is unadjusted for conservatism.
e. Stress value listed due to LOCA at actual member-end locations.
f. Stress value due to DBE seismic event at actual member-end locations.
g. Stress value due to dead weight at actual member-end locations.

Table 11 (continued)
STRESSES IN STEAM GENERATOR LOWER
AND REACTOR COOLANT PUMP SUPPORTS

Member Number [c]	Stress Due to Dead weight	Stress Due to DBE	LOCA Break Number [a]	LOCA Stress	Total Stress
98	4.2	7.3	4	13.8	23.4
48	6.2 [b]	9.5 [f]	7	11.9 [d]	21.4
2	1.7 [b]	3.7	1	15.0 [d]	18.7
3	1.6	4.2	1	24.1	29.9
15	3.1	4.2	5	15.2	22.5
18	1.6 [g]	2.4 [f]	7	5.1 [e]	9.1
20	4.2 [b]	5.8 [f]	7	25.5 [d]	31.1
21	3.6	8.6	1	13.7 [d]	22.3
22	4.6 [b]	11.8	1	14.5 [d]	26.3
23	3.6 [b]	6.2 [f]	4	14.7 [d]	20.9
24	3.0 [b]	9.8	4	8.3 [d]	18.1
26	3.5	8.6	1	12.9	25.0
33	3.5	5.1	7	10.6	19.2

a. Description of pipe ruptures:

Break Number	Description
1	RPV outlet nozzle guillotine
2	RPV inlet nozzle guillotine (The effect of RPV movement is included.)
3	Steam generator inlet nozzle guillotine
4	Steam generator outlet nozzle guillotine
5	Reactor coolant pump suction nozzle guillotine
7	50 degree elbow at the entrados split
12	Loop closure weld guillotine

b. Separate deadweight stress listed for reference only.
c. Value listed includes stresses due to LOCA, RPV movement, and dead weight at actual member-end locations. The support members given in this table a are shown in Figures 1 and 2.
d. Value listed includes stresses due to LOCA and dead weight at actual member-end locations. Corresponding seismic stress is unadjusted for conservatism.
e. Stress value listed due to LOCA at actual member-end locations.
f. Stress value due to DBE seismic event at actual member-end locations.
g. Stress value due to dead weight at actual member-end locations.

Figure 1
IDENTIFICATION OF R.C. PUMP SUPPORT MEMBERS

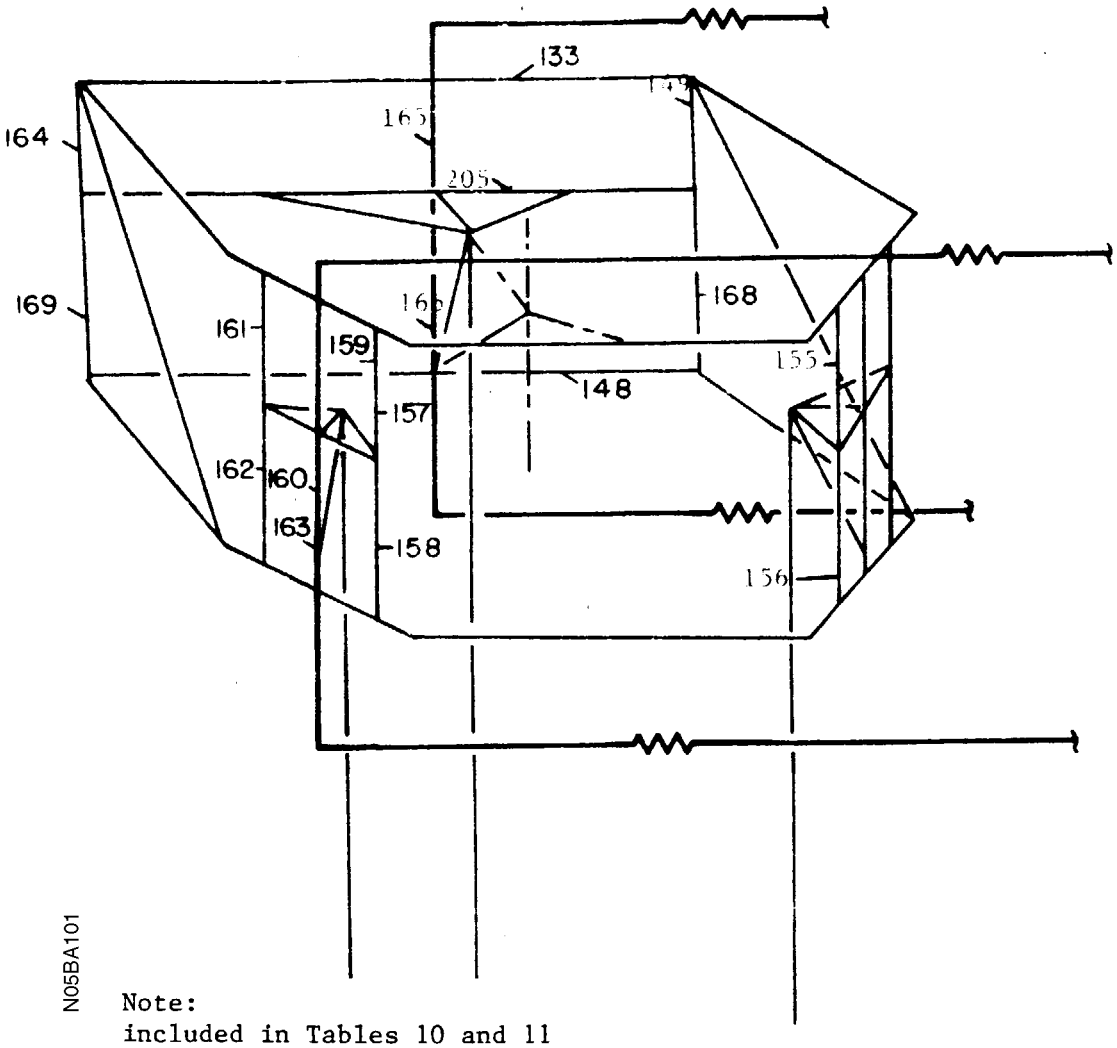

Note:
included in Tables 10 and 11
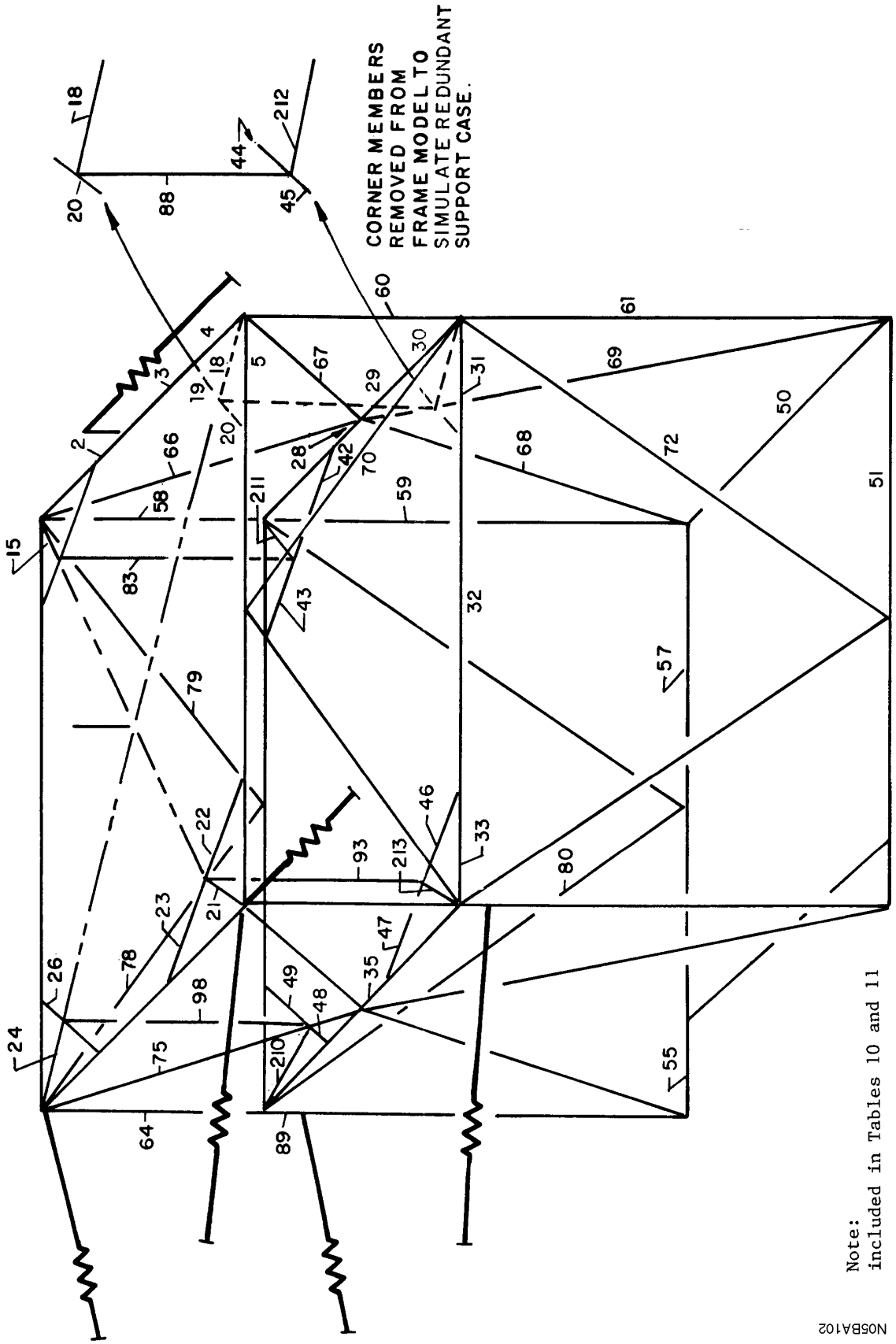
Figure 2
IDENTIFICATION OF STEAM GENERATOR MEMBERS