U.S. Nuclear Regulatory Commission

SONGS 2007 RO Written Examination

Applicant Information

Name:	
Date:	Facility/Unit:
Region: I / II / III / IV	Reactor Type: W / CE / BW / GE
Start Time:	Finish Time:

Instructions

Use the answer sheets provided to document your answers. Staple this cover sheet on top of the answer sheets. To pass the examination you must achieve a final grade of at least 80.00 percent Examination papers will be collected 6 hours after the examination begins.

Applicant Certification

All work done on this examination is my own. I have neither given nor received aid.

_____
Applicant's Signature

Results

Examination Value	_____	Points
Applicant's Score	_____	Points
Applicant's Grade	_____	Percent

1.	A	B	C	D	26.	A	B	C	D
2.	A	B	C	D	27.	A	B	C	D
3.	A	B	C	D	28.	A	B	C	D
4.	A	B	C	D	29.	A	B	C	D
5.	A	B	C	D	30.	A	B	C	D
6.	A	B	C	D	31.	A	B	C	D
7.	A	B	C	D	32.	A	B	C	D
8.	A	B	C	D	33.	A	B	C	D
9.	A	B	C	D	34.	A	B	C	D
10.	A	B	C	D	35.	A	B	C	D
11.	A	B	C	D	36.	A	B	C	D
12.	A	B	C	D	37.	A	B	C	D
13.	A	B	C	D	38.	A	B	C	D
14.	A	B	C	D	39.	A	B	C	D
15.	A	B	C	D	40.	A	B	C	D
16.	A	B	C	D	41.	A	B	C	D
17.	A	B	C	D	42.	A	B	C	D
18.	A	B	C	D	43.	A	B	C	D
19.	A	B	C	D	44.	A	B	C	D
20.	A	B	C	D	45.	A	B	C	D
21.	A	B	C	D	46.	A	B	C	D
22.	A	B	C	D	47.	A	B	C	D
23.	A	B	C	D	48.	A	B	C	D
24.	A	B	C	D	49.	A	B	C	D
25.	A	B	C	D	50.	A	B	C	D

51.	A	B	C	D
52.	A	B	C	D
53.	A	B	C	D
54.	A	B	C	D
55.	A	B	C	D
56.	A	B	C	D
57.	A	B	C	D
58.	A	B	C	D
59.	A	B	C	D
60.	A	B	C	D
61.	A	B	C	D
62.	A	B	C	D
63.	A	B	C	D
64.	A	B	C	D
65.	A	B	C	D
66.	A	B	C	D
67.	A	B	C	D
68.	A	B	C	D
69.	A	B	C	D
70.	A	B	C	D
71.	A	B	C	D
72.	A	B	C	D
73.	A	B	C	D
74.	A	B	C	D
75.	A	B	C	D

Question 001

Which ONE (1) of the following components acts to limit Reactor Coolant System leakage when the vapor seal fails on a Reactor Coolant Pump?

(Assume the lower, middle and upper seals are intact and functioning properly.)

A. Rotating baffle and shaft hydrostatic bushing.

B. Shaft hydrostatic bushing and O-rings.

C. Seal breakdown coil and rotating seal face.

D. Controlled bleedoff excess flow check valve and stationary carbon rings.

Question 002

Which ONE (1) of the following sets of conditions describes the automatic operation of the Reactor Coolant Pump Lube Oil Pumps?

A. The Normal Oil Lift Pump starts when RCP speed is less than 90%.
The Normal Anti-Reverse Rotation Device Pump starts when RCP speed is less than 90%.

B. The Normal Oil Lift Pump starts 15 seconds after the RCP is secured.
The Normal Anti-Reverse Rotation Device Pump starts when the RCP reaches zero speed.

C. The Normal Oil Lift Pump starts when RCP speed is less than 90%.
The Normal Anti-Reverse Rotation Device Pump starts when the RCP reaches zero speed.

D. The Normal Oil Lift Pump starts 15 seconds after the RCP is secured.
The Normal Anti-Reverse Rotation Device Pump starts when RCP speed is less than 90%.

Question 003

Given the following conditions:

- Unit 3 is in MODE 1 at 50% power at MOC.
- 3TV-0223, Letdown Heat Exchanger Temperature Control Valve fails closed.
- All control systems are in Automatic.
- Assume NO operator action.
- 3TV-0224B, Ion Exchanger Bypass Valve fails to go to BYPASS.

Which ONE (1) of the following describes the initial effect on the Pressurizer Level Control System?

Actual Pressurizer level _____ and Pressurizer level setpoint _____.

A. remains the same; remains the same

B. lowers; remains the same

C. remains the same; lowers

D. lowers; lowers

Question 004

Given the following conditions:

- Unit 2 is in MODE 5 on Shutdown Cooling (SDC) in the normal alignment.
- RCS temperature is being maintained constant at 150ºF.
- It is determined that SDC Pump (P-015) flow is too high for the current condition.

Which ONE (1) of the following is the preferred alignment for reducing the flowrate through the pump?

A. Ensure HV-8161, SDC HX Bypass Normal Block Valve is closed and then throttle closed HV-8160, SDC HX Bypass Normal Flow Control Valve.

B. Ensure HV-0396, SDC HX Bypass Standby Flow Control Valve is closed and then close HV-8161, SDC HX Bypass Normal Block Valve.

C. Ensure HV-0396, SDC HX Bypass Standby Flow Control Valve is closed and then throttle closed HV-8160, SDC HX Bypass Normal Flow Control Valve.

D. Ensure HV-8160, SDC HX Normal Bypass Flow Control Valve is closed and then throttle closed HV-0396, SDC HX Bypass Standby Flow Control Valve.

Question 005

Given the following conditions:

- Unit 3 is in MODE 5 with Shutdown Cooling (SDC) in service.
- RCS temperature is 190ºF.
- Train A SDC Heat Exchanger (HX) is in service and Train B SDC HX is in standby.
- Train B CCW is in standby.

Which ONE (1) of the following identifies the impact to the standby HX?

The Train B SDC HX…

A. will heat up to RCS temperature due to slow leakby through the SDC HX outlet valve.

B. maintains ambient conditions of SDC HX Room until the SDC HX outlet valve is opened.

C. SDC inlet valve must remain closed to prevent overpressurizing the HX.

D. may undergo potential tube damage due to ambient cooldown while isolated.

Question 006

Unit 3 has experienced a Loss of Offsite Power and a LOCA.

Which ONE (1) of the following Motor Control Center combinations will be available to power their respective ESFAS Valves?

A. 3BRA; 3BRB; 3BRC

B. 3BDX; 3BHX; 3BMX

C. 3BJ; 3BY;3BZ

D. 3BD; 3BE; 3BF

Question 007

Which ONE (1) of the following sets of conditions must be established within the Quench Tank prior to drawing a Pressurizer bubble?

A. Oxygen concentration must be maintained < 1% to prevent an explosive mixture from forming in the Quench Tank.

B. Oxygen concentration must be maintained < 5% in the event the Pressurizer or Reactor Head Vent Valves are opened.

C. Nitrogen pressure must be maintained > 1 psig to ensure a motive force for fluid to the Reactor Coolant Drain Tank.

D. Nitrogen pressure must be maintained > 5 psig to allow for purging of the Quench Tank.

Question 008

Given the following conditions:

- Unit 3 is in MODE 1 with Train A Component Cooling Water System in service.
- Normal makeup was initiated by the RO in response to a low level in the Train A Surge Tank.
- The Non-Critical Loop Isolation valves automatically closed during the makeup evolution.

Which ONE (1) of the following caused the Non-Critical Loop Isolation?

A. CCW Rad Monitor RE-7819 detected radiation in the Non-Critical Loop.

B. The Train A Component Cooling Water Surge Tank was overfilled.

C. A Safety Injection Actuation Signal has occurred.

D. Low suction pressure trip on the operating CCW Pump.

Question 009

Given the following conditions:

- Unit 2 has tripped from 100% power.
- Containment pressure is 3.6 psig and slowly rising.
- NO operator actions have been taken.

Which ONE (1) of the following identifies the automatic actions of the Component Cooling Water System?

A. SWC Outlet Valves from the standby CCW Heat Exchanger close.

B. CCW Supply and Return Lines to the Containment Normal Coolers open.

C. CCW Non-Critical Loop Isolation Valves close.

D. SDC Heat Exchangers CCW Outlet Valves open.

Question 010

Given the following conditions:

- Unit 2 is in MODE 5.
- Drawing a Pressurizer bubble is in progress.
- RCS temperature is 150ºF.
- The crew has just verified formation of a Pressurizer bubble.
- PV-0201A and PV-0201B, Letdown Backpressure Control Valves are fully open.
- RCS pressure is continuing to rise.

Which ONE (1) of the following will act to mitigate the RCS pressure rise?

A. Stop all but one Charging Pump to prevent a loss of Letdown flow.

B. Secure Charging Pumps and/or Pressurizer heaters to maintain pressure.

C. Throttle Letdown Flow Control Valves LV-0110A and LV-0110B open to allow PV-0201A and PV-0201B, Backpressure Control Valves to pass more flow.

D. Align LV-0227A, Volume Control Tank Inlet Valve to RADWASTE position to minimize backpressure on PV-0201A and PV-0201B.

Question 011

Which of the following Reactor Protection System bistables will automatically change state (trip) upon loss of power to an individual Core Protection Calculator (CPC)?

A. High LPD and low DNBR

B. Low DNBR and high linear power

C. High LPD and high linear power

D. High log power and low DNBR

Question 012

Which ONE (1) of the following statements describes the response of the Reactor Protection System to a loss of 120 VAC Vital Bus Y-03?

A. 2 of 8 Reactor trip breakers will open because their corresponding trip path deenergizes and the Reactor WILL trip.

B. 2 of 8 Reactor trip breakers will open because they share the instrument AC power supply and the Reactor WILL NOT trip.

C. 4 of 8 Reactor trip breakers will open because 2 trip paths will deenergize and the Reactor WILL NOT trip.

D. 4 of 8 Reactor trip breakers will open because 2 trip paths will deenergize and the Reactor WILL trip.

Question 013

Given the following conditions:

- A large break LOCA has occurred with a loss of offsite power.
- The rupture occurs on a Loop Cold Leg where SIT T-008 is connected to the RCS.
- RCS pressure immediately lowered to Containment pressure.
- Train A Emergency Diesel Generator has failed to start on an ESFAS signal.
- Train B Emergency Diesel Generator has just received its ESFAS signal to start.
- Safety Injection Tank pressures at the start of the transient were 600 psia.
- Reactor Vessel Plenum Level is 0%.

If this condition continues, which ONE (1) of the following describes the effect on the fuel assemblies?

A. Fuel failure will not occur. SIT injection pressure is insufficient to reflood the core.

B. Fuel failure will not occur. The large break LOCA analysis assumes one SIT does not inject.

C. Fuel failure may occur. SIT injection pressure is insufficient to reflood the core.

D. Fuel failure may occur. The large break LOCA analysis assumes one SIT does not inject.

Question 014

With Unit 2 operating at 100% power, which ONE (1) of the following conditions would require entry into a Technical Specification one (1) hour Limiting Condition of Operation?

A. A loss of three (3) Matrix Logic channels due to a common power source failure.

B. One (1) High Pressurizer Pressure trip channel is INOPERABLE.

C. A LPSI Pump is declared INOPERABLE following flow testing.

D. RWST temperature drops to 38ºF during a cold snap.

Question 015

Given the following conditions:

- Unit 3 in MODE 2.
- Turbine Plant Cooling Water flow to the running Containment Chiller is blocked.

Which ONE (1) of the following:

a.) Identifies the impact on the Containment Cooling System?

b.) What action should be taken to mitigate the situation?

A. a.) Containment Chiller trips on low TPCW Supply pressure.
b.) Place the Containment Emergency Cooling Units in service when Containment average air temperature exceeds 100ºF per SO23-1-4, Containment Normal Heat Removal.

B. a.) Containment Chill Water Pump trips on Chiller high condenser pressure.
b.) Place the Containment Emergency Cooling Units in service when Containment average air temperature exceeds 105ºF per SO23-1-4.1, Containment Emergency Cooling.

C. a.) Containment Chiller trips on low TPCW Supply pressure.
b.) Place the Standby Containment Chiller in service when Containment average air temperature exceeds 100ºF per SO23-1-4, Containment Normal Heat Removal.

D. a.) Containment Chill Water Pump trips on low suction pressure.
b.) Place the Standby Containment Chiller in service when Containment average air temperature exceeds 105ºF per SO23-1-4.1, Containment Emergency Cooling.

Question 016

Which ONE (1) of the following is the power supply to 2HV-9367, Train A Containment Spray Header Isolation Valve?

A. 2B09

B. 2BE

C. 2B08

D. 2BJ

Question 017

Given the following conditions:

- Unit 2 is at 100% power.
- 2FT-1021, Steam Generator E-088 Main Steam Flow Transmitter input to Steam Bypass Control System (SBCS) fails **low**.

Which ONE (1) of the following identifies the effect on the SBCS?

The Master Controller Remote Setpoint (black and white pen)…

A. rises to 1000 psia.

B. rises to 900 psia.

C. remains at 830 psia.

D. lowers to 650 psia.

Question 018

Which ONE (1) of the following describes the mitigation strategy for SO23-12-6, Loss of Feedwater?

A. Trip all RCPs; Attempt feedwater restoration; Control Pressure, Inventory and Heat Removal in the Functional Recovery Guidelines; Cooldown as required.

B. Trip one (1) RCP in each loop; Attempt feedwater restoration; Depressurize Steam Generators; Control Pressure, Inventory and Heat Removal.

C. Trip all RCPs; Minimize SG inventory loss; Attempt feedwater restoration; Control Pressure, Inventory and Heat Removal; Cooldown as required.

D. Trip one (1) RCP in each loop; Minimize SG inventory loss; Initiate cooldown at maximum rate; Control Pressure, Inventory and Heat Removal.

Question 019

Given the following conditions:

- Unit 2 was in MODE 2 at 1% power when a Reactor trip occurred.
- Steam Generator E-089 is at 20% narrow range level and 730 psia
- Steam Generator E-088 is at 19% narrow range level and 720 psia.

Which ONE (1) of the following identifies the discharge pressure of each Steam Generators Auxiliary Feedwater Pump?

AFW Pump P-141 is at _____. AFW Pump P-504 is at _____.

A. ~940 psig; ~930 psig

B. ~1350 psig; ~930 psig.

C. ~940 psig; ~1350 psig.

D. ~1350 psig; ~1350 psig.

Question 020

Which ONE (1) of the following sets of sump level alarms could be used to identify Auxiliary Feedwater System leakage?

A. Penetration, Component Cooling Water

B. Storage Tank, Containment

C. Safety Equipment Building, Control Building

D. Storage Tank, Penetration

Question 021

Which ONE (1) of the following sets of conditions must be met in order for a 6.9 kV bus to automatically transfer from the Unit 2 Unit Auxiliary Transformer to the Unit 2 Reserve Auxiliary Transformer?

A. 2XR3 energized with 6.9 kV supply breaker in AUTO.
2XR3 is not supplying 3A02.
2XU2 and 2XR3 lockout relays are reset.

B. 2XR2 energized with 6.9 kV supply breaker in AUTO.
2XR2 is not supplying 3A01.
2XU2 and 2XR2 lockout relays are reset.

C. 2XR1 energized with 6.9 kV supply breaker in AUTO.
2XR1 is not supplying 3A01.
2XU1 and 2XR1 lockout relays are reset.

D. 2XR3 energized with 6.9 kV supply breaker in AUTO.
2XR3 is not supplying 3A02.
2XU1 and 2XR3 lockout relays are reset.

Question 022

Train A, Train B, Train C, and Train D 1E DC electrical power subsystems shall be OPERABLE per Technical Specification 3.8.4 to support plant safety systems in which MODES?

A. Only MODES 1 and 2.

B. Only MODES 1, 2 and 3.

C. Only MODES 1, 2, 3 and 4.

D. Only MODES 1, 2, 3, 4, and 5.

Question 023

Which ONE (1) of the following identifies the impact to an Emergency Diesel Generator's Starting Air System when the outlet valve from air receivers T-335 and T-340 is isolated?

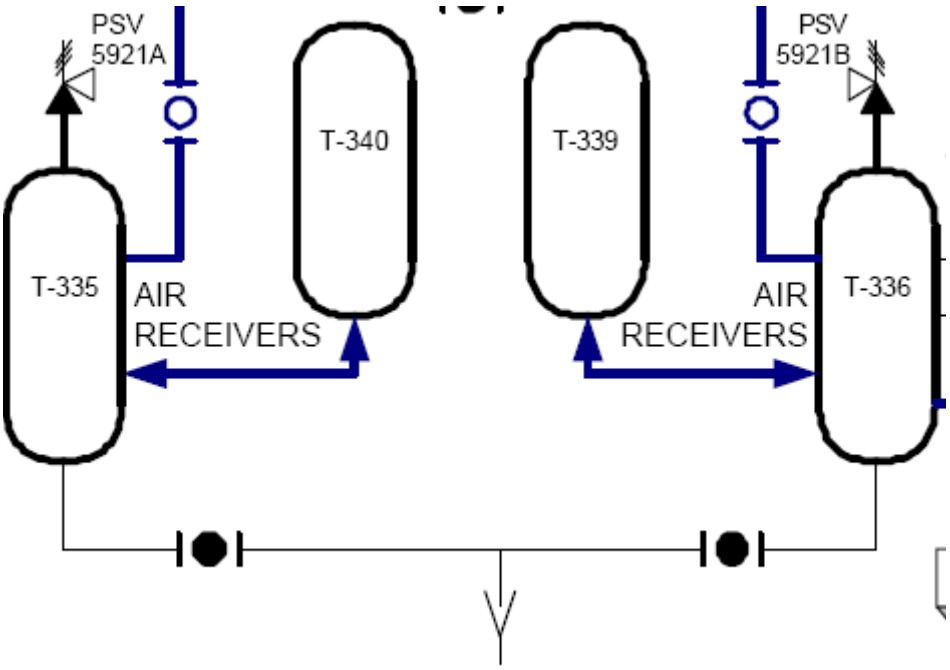

A. One Air Start Motor on each diesel continues to function.

B. Both sets of Air Start Motors on one diesel continue to function.

C. One set of Air Start Motors on each diesel continue to function.

D. Both sets of Air Start Motors on both diesels continue to function.

Question 024

Which ONE (1) of the following is the effect of a radiation signal that exceeds the setpoint to RE-7865, Plant Vent Stack Wide Range Radiation Monitor, when it is aligned to the Containment Purge Stack?

A radiation signal that exceeds the setpoint to RE-7865 would...

A. secure Continuous Exhaust Fans A-310, A-311 and A-312.

B. initiate a Containment Purge Isolation Signal (CPIS).

C. close the Outside Containment Purge Isolation Valves.

D. close FV-7202, Waste Gas Discharge Flow Control Valve.

Question 025

Which ONE (1) of the following describes the power supply arrangement for the Salt Water Cooling Valves?

CCW Heat Exchanger SWC Normal Outlet Valves (HV-6495 and HV-6497) are powered from _____ and Saltwater Emergency Discharge Valves (HV-6494 and HV-6496) are powered from _____.

A. 50' Control Building MCCs BY and BZ; 7' Turbine Building MCC BK

B. 7' Turbine Building MCC BK ; 50' Control Building MCCs BY and BZ

C. 7' Turbine Building MCC BM; 7' Turbine Building MCC BK

D. 50' Control Building MCC BY; 50' Control Building MCC BZ

Question 026

Given the following conditions:

- Unit 2 is in MODE 1.
- Train A Component Cooling Water (CCW) Pump P-025 is in service.
- Train A Salt Water Cooling (SWC) Pump P-112 is in service.
- CCW temperatures are rising.

Subsequently the following annunciator alarms are received:

- 64A35 - CCW HX TRAIN A DIFF PRESS HI.
- 64A55 - SWC TRAIN A FLOW TROUBLE.

Which ONE (1) of the following:

a.) Identifies the status of the Salt Water Cooling System?

b.) What action should be taken to mitigate the situation?

A. a.) Marine fouling is occurring.
b.) Start SWC Pump P-307 per SO23-2-8, SWC System Operation.

B. a.) SWC Pump P-112 performance is degrading.
b.) Transfer CCW to Train B per SO23-13-7, Loss of CCW/SWC.

C. a.) Marine fouling is occurring.
b.) Transfer CCW to Train B per SO23-13-7, Loss of CCW/SWC.

D. a.) SWC Pump P-112 performance is degrading.
b.) Start SWC Pump P-307 per SO23-2-8, SWC System Operation.

Question 027

Given the following conditions:

- A Unit trip has occurred due to a loss of Instrument Air.
- The Atmospheric Dump Valves were placed in AUTO / MODULATE and set at 1000 psia post trip.
- No other operator actions are taken.

Which ONE (1) of the following describes the condition of plant systems following the trip?

A. Letdown flow is isolated.
Main Steam Safety Valves are maintaining SG pressure due to loss of the Atmospheric Dump Valves.

B. Letdown flow is at a minimum.
Atmospheric Dump Valves are controlling SG pressure.

C. Letdown flow is isolated.
Atmospheric Dump Valves are controlling SG pressure.

D. Letdown flow is at a minimum.
Main Steam Safety Valves are maintaining SG pressure due to loss of the Atmospheric Dump Valves.

Question 028

A Containment Isolation Actuation Signal has occurred.

Which ONE (1) of the following sets of valve “CLOSE” indications could be used to make that determination?

A. HV-9920, Containment Normal Cooling System Supply Isolation Valve.
HV-9304, Containment Emergency Sump Outlet Isolation Valve.
HV-8205, Steam Generator E-088 Main Steam Isolation Valve.

B. HV-9823, Containment Mini-Purge Supply Isolation Valve.
HV-5437, Nitrogen to Containment Isolation Valve.
HV-6211, Non-Critical Loop Containment Isolation Valve.

C. HV-9825, Containment Mini-Purge Exhaust Isolation Valve.
HV-4714, Steam Generator E-088 AFW Containment Isolation Valve.
HV-9971, Containment Normal Cooling System Return Isolation Valve.

D. HV-9336, SDC to LPSI Pump Suction Containment Isolation Valve.
HV-9205, Letdown Containment Isolation Valve.
HV-5803, Containment Sump Radwaste Isolation Valve.

Question 029

Given the following conditions:

- Unit 2 is shutting down from 100% power.
- CEAs are being inserted for Axial Shape Index control.
- Annunciator 56B45 - RCS SUBCOOLED MARGIN LO has just alarmed.
- The Subcooled Margin Monitor (SCM) Display on CR-56 is not available.

Which ONE (1) of the following would be used to determine the most conservative subcooled margin?

A. Observe “HEAD” and verify SCM on the DLMS.

B. Observe “CET” and verify SCM on the QSPDS.

C. Observe “HEAD” and verify SCM on the QSPDS.

D. Observe “CET” and verify SCM on the DLMS.

Question 030

Which ONE (1) of the following inputs is used to enable the 55% Loss of Load bistable?

A. Linear Power.

B. Hydraulic oil pressure from the Main Turbine HP Stop Valves.

C. Log Channel Power.

D. Valve position indication of the Main Turbine HP Stop Valves.

Question 031

Given the following conditions:

- Representative Core Exit Thermocouple (REP CET) value is 560ºF.
- A CET that was previously indicating 560ºF has an open circuit.

Which ONE (1) of the following identifies the impact that the CET open circuit failure has on the REP CET value used for verification of Natural Circulation?

The REP CET calculated value…

A. does not change, the failed CET input is NOT used by QSPDS.

B. indicates higher, the failed CET input is NOT used by QSPDS.

C. indicates lower, the failed CET input is flagged but used by QSPDS.

D. does not change, the failed CET input is flagged but used by QSPDS.

Question 032

A loss of Non-1E Instrument Bus Q0612 has occurred on Unit 3 while at full power. The RO is directed to place the Steam Bypass Control System (SBCS) Master Controller in MANUAL per SO23-13-19, Loss of Non-1E Instrument Buses.

Which ONE (1) of the following is the reason for placing the Steam Bypass Control System in MANUAL?

A. Minimize load across 3VS612, Instrument Bus Transfer Switch, when taken to the EMERGENCY position.

B. Prevent the SBCS Valves from inadvertently opening when Q0612 is reenergized.

C. To avoid defeating the single failure design of the SBCS.

D. Prevent a power excursion as the valve permissives are in MANUAL.

Question 033

Given the following conditions:

- A Containment Purge is in progress.
- RE-7865, Plant Vent Stack Radiation Monitor is aligned to the Purge Stack.
- Radiography in the vicinity of RE-7807, Containment Airborne Radiation Monitor has placed it in alarm.

Which ONE (1) of the following identifies the result of RE-7807 going into alarm?

A. Initiates a Containment Purge Isolation Signal.

B. Closes only the outside Containment Purge Isolation Valves.

C. Secures Continuous Exhaust Fans A-310, A-311 and A-312.

D. Closes only the inside Containment Purge Isolation Valves.

Question 034

Which ONE (1) of the following responses is expected immediately following the opening of a Steam Bypass Control Valve at 50% power?

Steam Generator Narrow Range level…

A. swells due to an increase in SG downcomer mass.

B. shrinks due to lowering SG pressure.

C. swells due to an increase in density of the SG liquid-vapor mixture.

D. shrinks due to collapse of bubbles in the tube bundle region.

Question 035

Which ONE (1) of the following is the setpoint of the overspeed trip on the Main Turbine?

A. 1890 rpm

B. 1926 rpm

C. 1980 rpm

D. 2034 rpm

Question 036

Given the following conditions:

- A liquid release of T-057, Radwaste Secondary Tank has been in progress for five (5) minutes using release valve 2/3HV-7641, Radwaste Discharge.
- The release was automatically terminated due to high radiation as sensed by 2/3 RE-7813, Radwaste Discharge Line Radiation Monitor.
- Review of the Release Permit has identified an insufficient recirculation of T-057, Radwaste Secondary Tank prior to release.

Which ONE (1) of the following actions should be taken to correct the situation?

A. Perform a one (1) volume recirculation of T-057.
Re-sample and finish releasing the tank per the current in use attachment.

B. Perform a four (4) volume recirculation of T-057.
Complete the release attachment, re-sample and initiate a new attachment to finish releasing the tank.

C. Perform a one (1) volume recirculation of T-057.
Complete the release attachment, re-sample and initiate a new attachment to finish releasing the tank.

D. Perform a four (4) volume recirculation of T-057.
Re-sample and finish releasing the tank per the current in use attachment.

Question 037

Which ONE (1) of the following identifies the change in the Control Room ventilation alignment when a high radiation signal is received on 2/3RE-7824G1 & 2/3RE-7825G2, Control Room Intake Air Train A and B Radiation Monitors?

A. 2/3 A-206 and 2/3 A-207, Emergency Ventilation Supply Fans are started.
94% of the Control Room Complex air is recycled.
2/3 E-335 and 2/3 E-336, Emergency Chiller Units are started.

B. 2/3 A-206 and 2/3 A-207, Emergency Ventilation Supply Fans are secured.
100% of the Control Room Complex air is recycled.
2/3 E-335 and 2/3 E-336, Emergency Chiller Units are started

C. 2/3 A-206 and 2/3 A-207, Emergency Ventilation Supply Fans are secured.
94% of the Control Room Complex air is recycled.
2/3 A-201 and 2/3 A-202, Control Room Complex Exhaust Fans are secured

D. 2/3 A-206 and 2/3 A-207, Emergency Ventilation Supply Fans are started.
100% of the Control Room Complex air is recycled.
2/3 A-201 and 2/3 A-202, Control Room Complex Exhaust Fans are secured.

Question 038

Instrument air pressure has been steadily decreasing from 105 psig as read on CR-61 2/3 PI-5344A. Pressure continues to decrease until it stabilizes at 86 psig.

Which ONE (1) of the following actions occurred that caused pressure to stabilize?

A. The LAG 1 Instrument Air Compressor started and is fully loaded.

B. PCV-5354, Respiratory and Service Air cross-connect valve has opened.

C. PCV-5458, Nitrogen Backup to Instrument Air supply valve has opened.

D. The LEAD 1 Instrument Air Compressor started and is fully loaded.

Question 039

Given the following conditions:

- Unit 2 is performing the SO23-12-7, Loss of Forced Circulation / Loss of Offsite Power following a loss of offsite power.
- The following Annunciators alarm in the Control Room:
  - 63A33 - 2D2 125 VDC BUS TROUBLE
  - 63A43 - 2D2 CHARGER TROUBLE
- The PEO has verified that 2D2 Battery Breaker is open.
- DC Bus 2D2 indicates 129 VDC.

Which ONE (1) of the following actions is required?

A. Declare DC Bus 2D2 INOPERABLE due to low battery voltage.

B. Perform one re-close attempt of the battery breaker (breaker remains open), and then leave the Y-002 Inverter in service.

C. Verify proper operation of Y-002 Inverter in its current configuration.

D. Check 2D2 for a battery ground and remove Y-002 Inverter from service if an Inverter DC side ground is identified.

Question 040

Given the following conditions:

- Pressurizer pressure is slowly lowering.
- Pressurizer level is slowly rising.
- Containment humidity is slowly rising.
- Pressurizer vapor space temperature is slowly lowering.
- Subcooled Margin is slowly lowering.
- No automatic actions have occurred.

Which ONE (1) of the following is the reason for the conditions listed?

A Pressurizer…

A. safety valve has minor seat leakage.

B. Spray valve is open.

C. level condensing pot is leaking.

D. heater weld is leaking.

Question 041

Given the following conditions:

- A small break LOCA is in progress on Unit 3 in MODE 1.
- Both Trains of CCW are in service.

Due to equipment malfunctions the following alignment occurs:

- The CCW Letdown Heat Exchanger is aligned to Train A.
- The CCW Non-Critical Loop is aligned to Train B.
- RE-7819, CCW Process Radiation Monitor goes into alarm.

Which ONE (1) of the following is the location of the leak?

A. Letdown Heat Exchanger.

B. RCS Hot Leg Sample Cooler.

C. Shutdown Cooling Heat Exchanger.

D. RCP Seal Cooler.

Question 042

Given the following Unit 2 conditions:

- SIAS actuated due to a LOCA.
- Both HPSI Pumps are tripped.
- RCS pressure is 450 psia.
- RCS temperature is 430°F.
- Containment pressure is 2.5 psig.
- All other equipment is running per design.
- The crew is performing actions of SO23-12-1, Standard Post Trip Actions.

Which ONE (1) of the following describes the required action and associated reason regarding operation of the RCPs?

A. Stop two RCPs and leave two RCPs running to provide forced cooling flow of the RCS.

B. Stop two RCPs and leave two RCPs running to minimize fluid mass loss out of the break.

C. Stop all RCPs to prevent phase separation of RCS liquid.

D. Stop all RCPs due to loss of Net Positive Suction Head.

Question 043

Given the following conditions for Reactor Coolant Pump (RCP) P-004:

- Lower Seal pressure is 2235 psia.
- Middle and Upper Seal pressures are oscillating between 75 and 2235 psia.
- Vapor Seal Cavity pressure is 75 psia.
- Controlled Bleed-Off flow is lost.

Which ONE (1) of the following is the required action and reason for the given set of conditions?

A. Immediately trip the Reactor.
When CEAs have been inserted for 5 seconds, trip RCP P-004 to prevent exceeding DNBR.

B. Initiate a plant shutdown.
Trip the Reactor and trip RCP P-004 to preserve the Vapor Seal and prevent a small break LOCA.

C. Immediately trip the Reactor.
After 5 seconds trip RCP P-004 to prevent exceeding local power density (LPD) setpoints.

D. Initiate a plant shutdown.
When the Reactor is tripped and CEAs have been inserted for 5 seconds, trip RCP P-004 to prevent exceeding local power density (LPD) setpoints.

Question 044

With the Unit at 100% power, which ONE (1) of the following would cause a loss of Letdown flow?

A. LV-0227A, Volume Control Tank Inlet Valve fails to RADWASTE position.

B. E-063, Regen Heat Exchanger outlet temperature of 450ºF

C. E-062, Letdown Heat Exchanger outlet temperature of 150ºF.

D. 80 GPM Letdown flow with only one Charging Pump running.

Question 045

Given the following conditions:

- Unit 2 was cooling down to MODE 5 with Train A Shutdown Cooling (SDC) in service.
- RCS cooldown rate was 20ºF per hour when a loss of Train A SDC Pump occurred.
- RCS temperature is 300ºF.
- When the Train B SDC Pump was started the cooldown rate rose to 50ºF per hour.

Which ONE (1) of the following describes the actions necessary to continue with the RCS cooldown per SO23-13-15, Loss of Shutdown Cooling?

A. Throttle closed the SDC HX Bypass Flow Control Valve to establish a minimum flowrate of 2750 gpm.
Throttle closed the SDC Heat Exchanger Outlet Valve to establish the required cooldown rate.

B. Throttle open the SDC HX Bypass Flow Control Valve to establish a minimum flowrate of 2500 gpm.
Throttle closed the SDC Heat Exchanger Outlet Valve to establish the required cooldown rate.

C. Throttle closed the SDC HX Bypass Flow Control Valve to establish a minimum flowrate of 2750 gpm.
Throttle open the SDC Heat Exchanger Outlet Valve to establish the required cooldown rate.

D. Throttle open the SDC HX Bypass Flow Control Valve to establish a minimum flowrate of 2500 gpm.
Throttle open the SDC Heat Exchanger Outlet Valve to establish the required cooldown rate.

Question 046

Given the following plant conditions:

- Unit 2 is in MODE 5 on Shutdown Cooling (SDC).
- A total loss of Component Cooling Water (CCW) occurs on Unit 2.

Which ONE (1) of the following actions is required to restore cooling to Unit 2 Reactor Coolant System?

A. Allow the RCS to heatup and use the Steam Generators for heat removal.

B. Cross connect CCW through the Instrument Air System.

C. Cross connect CCW through the Radwaste System Supply and Return Headers.

D. Align the fire main to the SDC Heat Exchangers.

Question 047

Given the following conditions:

- Pressurizer Pressure Channel Y is in service.
- Pressurizer Pressure indication PT-0100Y has failed high.
- HS-0100A, Pressurizer Pressure Channel Selector is in the Channel Y position.
- An inadvertent SIAS has occurred.
- Pressurizer Pressure is 2150 psia and slowly lowering.

Which ONE (1) of the following is required to restore operation of the 1E Pressurizer heaters?

A. Transfer PZR Pressure Control to Channel X.
Restore 1E PZR Heaters by going to OVERRIDE, then OFF, then AUTO.

B. Reset the SIAS signal.
Restore 1E PZR Heaters by going to OFF, then ON, then AUTO.

C. Transfer PZR Pressure Control to Channel X.
Restore 1E PZR Heaters by going to OFF, then ON, then AUTO.

D. Reset the SIAS signal.
Restore 1E PZR Heaters by going to OVERRIDE, then OFF, then AUTO.

Question 048

Which ONE (1) of the following describes the conditions necessary to perform an asymmetric Steam Generator natural circulation cooldown following a Steam Generator Tube Rupture?

A. Limit the cooldown rate of the steaming SG.
Maintain a stable non-divergent ΔT between RCS loops.

B. Maximize the cooldown rate of the steaming SG.
Maintain a stable divergent ΔT between RCS loops.

C. Limit the cooldown rate of the steaming SG.
Maintain a stable divergent ΔT between RCS loops.

D. Maximize the cooldown rate of the steaming SG.
Maintain a stable non-divergent ΔT between RCS loops.

Question 049

Given the following conditions:

- A Station Blackout is in progress on both Units.
- SO23-12-11, EOI Supporting Attachments, Attachment 9, Control Building Ventilation Emergency Actions must be performed.

Which ONE (1) of the following is the time associated with performing Attachment 9 and the reason for this action?

Open the Control Room cabinet doors within…

A. 15 minutes of loss of Control Room Ventilation to prevent spurious actuation of relays.

B. 30 minutes of loss of Control Room Ventilation to prevent damage to equipment due to overheating.

C. 45 minutes of loss of Control Room Ventilation to prevent spurious actuation of relays.

D. 60 minutes of loss of Control Room Ventilation to prevent damage to equipment due to overheating.

Question 050

Given the following conditions:

- Unit 2 is at 100% when a Loss of Offsite Power occurs.
- 4160 Volt Buses 2A03 and 2A07 become de-energized.
- The Main Steam Isolation Valves and Steam Generator Blowdown Valves must be closed.
- EFAS-1 and EFAS-2 have actuated.

Which ONE (1) of the following states the reason for closing these valves manually vice initiating a Main Steam Isolation Signal?

A. Auxiliary Feedwater flow would be interrupted when SG levels went below 21%.

B. Steam Generator Blowdown Valves could not be re-opened.

C. Main Feedwater flow would be interrupted until it is overridden.

D. Atmospheric Dump Valves would be isolated until they are overridden.

Question 051

Given the following conditions:

- Unit 3 is at 100% power
- The following Annunciators are in alarm:
  - 56A02 - LOG POWER LEVEL HI CHANNEL TRIP
  - 56A03 - LOCAL POWER DENSITY HI CHANNEL TRIP
  - 56A04 - DNBR LO CHANNEL TRIP
- Pressurizer pressure is aligned to Channel Y and is 2235 psia and steady.
- Pressurizer level is aligned to Channel Y and is 53% and steady.
- Reactor Trip Path 3 and 4 lights are **extinguished**.
- Plant Protection System bistables on Channels A and C ROMs are **not tripped**.

Which ONE (1) of the following Vital AC Buses has been lost?

A. Vital Bus 1.

B. Vital Bus 2.

C. Vital Bus 3.

D. Vital Bus 4.

Question 052

Given the following conditions:

- Unit 2 is in MODE 3 and the following alarms have been received:
  - 63A32 - 2D1 125 VDC BUS TROUBLE
  - 63A52 - 2D1 CHARGER TROUBLE
- It was determined that the 2D1 Battery Charger has malfunctioned.

Which ONE (1) of the following actions is required to maintain power to the DC bus?

A. Open the 2D1 Battery Breaker and cross-tie DC Bus 2 with DC Bus 1.

B. Minimize DC loads and place the Spare Battery in service.

C. Minimize DC loads and place the Spare Battery Charger in service.

D. Open the 2D1 Battery Breaker and cross-tie DC Bus 3 with DC Bus 1.

Question 053

SO23-13-7, Loss of CCW/SWC contains guidance to start the affected train CCW Pump prior to the SWC Pump start while recovering from the loss of a SWC Pump.

Which ONE (1) of the following is the reason for this action?

A. Ensures the CCW radiation monitor is in service in the event of CCW leakage into SWC.

B. Prevent thermal shock of the CCW Heat Exchanger.

C. CCW System provides cooling for the CCW Pump seal.

D. Prevent saltwater from entering the CCW System in the event of a tube leak.

Question 054

Given the following conditions:

- Power level is 25%.
- Pressurizer pressure is rising.
- An ATWS is in progress.
- All attempts to trip the Reactor have failed.
- Emergency Boration is being initiated.
- The BAMU Pumps will NOT start.

Which ONE (1) of the following sources of boron will have the greatest impact on core reactivity and why?

A. BAMU Tanks because of the higher flowrate.

B. BAMU Tanks because of the higher boron concentration.

C. RWST because of the higher head of the RWST Tank.

D. RWST because of the closer connection to the Charging Pump suction.

Question 055

Given the following conditions:

- Steam Generator (SG) E-089 Excess Steam Demand Event (ESDE) has occurred inside Containment.
- SG E-089 wide range level is 0% (dryout).
- SG E-088 narrow range level is 34%.
- EFAS-2 was actuated post-trip while EFAS-1 was not.
- The crew is preparing to reset ESFAS Functions per SO23-12-5, ESDE.

Based on the Caution for resetting a Main Steam Isolation Signal, what actions should be taken and why?

A. MSIS can be reset. Limit the flowrate to SG E-088 to avoid collapsing the feed ring.

B. MSIS should **not** be reset. AFW flow may initiate to SG E-089 and result in a Steam Generator tube rupture.

C. MSIS can be reset. Limit the flowrate to SG E-088 to avoid Pressurized Thermal Shock concerns.

D. MSIS should **not** be reset. AFW flow may initiate to SG E-089 and collapse the feed ring.

Question 056

Given the following conditions:

- Unit 2 is recovering from a loss of feedwater.
- Plant temperature is stable at 545ºF.
- Main Feedwater will be used to feed the Steam Generators.
- There is no Main Feedwater Pump running at this time.

Which ONE (1) of the following identifies the actions required to start a Main Feedwater Pump?

A. Ensure the Motor Speed Controller (MSC) and Electric Automatic Positioner (EAP) are at the low speed stop.
Reset the MFWPT and verify the MFWPT HP and LP Stop Valves are open.

B. Ensure the Motor Speed Controller (MSC) and Electric Automatic Positioner (EAP) are at the high speed stop.
Reset the MFWPT and verify the MFWPT HP and LP Stop Valves are closed.

C. Ensure the Motor Speed Controller (MSC) and Electric Automatic Positioner (EAP) are at the high speed stop.
Reset the MFWPT and verify the MFWPT HP and LP Stop Valves are open.

D. Ensure the Motor Speed Controller (MSC) and Electric Automatic Positioner (EAP) are at the low speed stop.
Reset the MFWPT and verify the MFWPT HP and LP Stop Valves are closed.

Question 057

Given the following conditions:

- Unit 2 is at 65% power.
- A power ascension is in progress.
- The RO is withdrawing Group 6 CEAs when a CEDMCS malfunction causes continuous withdrawal of Group 6 CEAs.

Assuming no other operator actions are taken (no manipulations of any controls / systems), which ONE (1) of the following actions is required?

A. Place the CEDMCS Selector Switch in OFF.
If CEA withdrawal continues, reposition the Bank Selector Switch to any other CEA Group than Group 6.

B. Depress Reactor Trip Switches 2HS-9132-1 through 2HS-9132-4 to open all Reactor Trip Breakers.
If Reactor fails to trip, open MG Set Output Breakers by deenergizing Load Centers 2B16 and 2B17.

C. Place the CEDMCS Selector Switch in OFF.
If CEA withdrawal continues, depress Reactor Trip Switches 2HS-9132-1 through 2HS-9132-4 to open all Reactor Trip Breakers.

D. Depress Reactor Trip Switches 2HS-9132-1 through 2HS-9132-4 to open all Reactor Trip Breakers.
If Reactor fails to trip, open MG Set Output Breakers by deenergizing Load Centers 2B14 and 2B15.

Question 058

Given the following conditions:

- An ATWS has occurred at 90% power.
- The feeder breaker to Bus B04 has opened.
- An emergency boration is started in accordance with SO23-13-11, Emergency Boration of the RCS/Inadvertent Dilution or Boration.
- SIAS has NOT actuated.

Which ONE (1) of the following is the reason for the listed valve position during an emergency boration?

A. LV-0227B, VCT Outlet Valve is in MANUAL and CLOSED to prevent VCT pressure from stopping gravity feed flow.

B. LV-0227B, VCT Outlet Valve is in MANUAL and CLOSED to allow the BAMU Pump head to reach the Charging Pump suction.

C. FV-9253, Blended Makeup to VCT Isolation Valve is in MANUAL and CLOSED to prevent bypass flow from the blend tee to the VCT.

D. FV-9253, Blended Makeup to VCT Isolation Valve is in MANUAL and CLOSED to allow borated water to flow from the RWST when BAMU tanks empty.

Question 059

Given the following conditions:

- Pressurizer Level Channel X is in service.
- A leak develops on the Pressurizer Channel X reference leg.

Which ONE (1) of the following identifies the difference between indicated and actual Pressurizer level?

A. Indicated level rises; Actual level lowers.

B. Indicated level rises; Actual level rises.

C. Indicated level lowers; Actual level lowers.

D. Indicated level lowers; Actual level rises.

Question 060

Given the following conditions:

- The Unit is in MODE 6 with refueling in progress.
- The Fuel Transfer Tube is open.
- Both Spent Fuel Pool Gates are open.

Which ONE (1) of the following identifies the Radiation Monitors which would be the first to indicate a Fuel Handling Accident has occurred inside Containment?

A. RE-7845, Containment Personnel Lock Area Radiation Monitor
RE-7822, Fuel Handling Building Airborne Radiation Monitor

B. RE-7845, Containment Personnel Lock Area Radiation Monitor
RE-7848, Containment Building 30' Area Radiation Monitor

C. RE-7848, Containment Building 30' Area Radiation Monitor
RE-7823, Fuel Handling Building Airborne Radiation Monitor

D. RE-7822, Fuel Handling Building Airborne Radiation Monitor
RE-7823, Fuel Handling Building Airborne Radiation Monitor

Question 061

Given the following conditions:

- SO23-13-14, Reactor Coolant Leak was entered for a Steam Generator tube leak on SG E-089.
- While performing steps in SO23-13-14, several tubes failed and the crew transitioned to SO23-12-4, Steam Generator Tube Rupture.
- Actions of SO23-12-4, Steam Generator Tube Rupture are in effect with the crew preparing to place the Shutdown Cooling System in service.
- RCS pressure is 330 psia and slowly lowering.
- RCS Thot is 360ºF and slowly rising.
- Reactor Vessel Plenum level is 80%.

Which ONE (1) of the following actions is required and what is the reason for that action?

A. Continue to bleed steam from Steam Generator E-089 as SDC entry conditions are not met.

B. Restore Reactor Vessel Plenum level to greater than or equal to 100% to ensure the hot legs are full and SDC will operate unimpeded.

C. Lower Core Exit Saturation Margin and maintain as close to 20ºF as possible to minimize primary to secondary leakage.

D. Restore Reactor Vessel Head level to 100% to ensure adequate reserve volume in the RCS during the cooldown.

Question 062

Given the following:

- The plant is at 100% power.
- NO radioactive releases are in progress.
- P-168, Radwaste Primary Pump has developed a leak while pumping 2/3 T-066, Radwaste Primary Tank contents through the Radwaste Secondary Ion Exchanger.

Which ONE (1) of the following radiation monitors will be the first to indicate the leak?

A. RE-7813, Radwaste Discharge Line Monitor.

B. RE-7865, Plant Vent Stack Wide Range Monitor.

C. RE-7828, Containment Purge Stack Monitor.

D. RE-7838, Sample Lab Isolation Monitor.

Question 063

Given the following Unit 3 conditions:

- The Control Room was evacuated 15 minutes ago due to dense smoke.
- SO23-13-2, Shutdown from Outside the Control Room is in progress.
- Attachment 9, 33 Duties is being performed to establish AFW flow to the Steam Generator E-088.
- 3MP-141, Auxiliary Feedwater Pump is the only available AFW source.
- SG 3ME-088 is at 10% narrow range level.
- SG 3ME-089 is at 65% narrow range level.

Which ONE (1) of the following sets of actions will align flow to Steam Generator 3ME-088?

A. UNLOCK and OPEN S31305MU634, 3MP-504/3MP-141 Cross-connect.
UNLOCK and OPEN S31305MU635, 3MP-141/3MP-504 Cross-connect.

B. UNLOCK and OPEN S31305MU635, 3MP-141/3MP-504 Cross-connect.
Ensure S31305MU634, 3MP-504/3MP-141 Cross-connect is CLOSED.

C. UNLOCK and OPEN S31305MU634, 3MP-504/3MP-141 Cross-connect.
Ensure S31305MU635, 3MP-141/3MP-504 Cross-connect is CLOSED.

D. OPEN 3HV-4705, 3MP-140 Turbine Pump Discharge to SG E-088.
OPEN 3HV-4706, 3MP-140 Turbine Pump Discharge to SG E-089.

Question 064

Given the following:

- Unit 2 is at 90% power and is scheduled for a Refueling shutdown.
- Chemistry reports that gross gamma activity and fission product gases have increased in the Reactor Coolant.

Which ONE (1) of the following sets of actions will have the greatest effect at reducing fission product gases in the Reactor Coolant System?

A. Force Pressurizer Spray using Proportional Heaters.
Align PZR Degas to the VCT to maximize degas effect.

B. Force Pressurizer Spray using Proportional Heaters.
Align PZR Degas to the Radwaste header to maximize degas effect.

C. Force Pressurizer Spray using Proportional and Backup Heaters.
Align PZR Degas to the VCT to maximize degas effect.

D. Force Pressurizer Spray using Proportional and Backup Heaters.
Align PZR Degas to the Radwaste header to maximize degas effect.

Question 065

Given the following conditions:

- The crew has entered SO23-12-9, Functional Recovery.
- Natural Circulation conditions exist in the RCS.
- Preparations are being made to cooldown on Natural Circulation to Shutdown Cooling entry conditions.
- No RAS has occurred.

Which ONE (1) of the following is the operational implication of performing a Natural Circulation cooldown in this condition?

A. Voiding in the head is NOT expected to occur.
Collapse any voids when Reactor Vessel Head level is less than 100% to prevent gas binding of the SDC Pumps when placed in service.

B. Voiding in the head is expected to occur.
Collapse the void when Reactor Vessel Head level is less than 100% to prevent disruption of Natural Circulation.

C. Voiding in the head is NOT expected to occur.
Collapse any voids when Plenum level is less than 100% to prevent disruption of Natural Circulation.

D. Voiding in the head is expected to occur.
Collapse the void when Plenum level is less than 100% to prevent gas binding of the SDC Pumps when placed in service.

Question 066

Unit 2 is in MODE 3 with plant status as follows:

- Main Feedwater is secured.
- Auxiliary Feedwater Pumps P-141 and P-504 are running to provide feedwater to the Steam Generators.
- Fire in a cable tray located in 45' Penetration Building has disabled 2LI-3204-2 (Condensate Storage Tank T-121 level indication) on CR-53.
- Unit 2 CRS has entered SO23-13-21, Fire.
- The CRS has directed you to proceed with SO23-13-21, Attachment 3 for local monitoring of Condensate Storage Tank T-121 level.
- Condensate Storage Tanks T-121 and T-120 are NOT cross-connected.

    - 2PI-3394L = 9.0 psig
    - 2PI-4701 = 8.0 psig
    - 2PI-4708 = 6.5 psig
    - 2PI-4734 = 7.0 psig

Which ONE (1) of the following is the quantity of makeup water that is available per Attachment 3?

A. 87,303 gallons

B. 93,755 gallons

C. 105,950 gallons

D. 118,201 gallons

Question 067

Which ONE (1) of the following are the minimum plant conditions required to have a Diverse Emergency Feedwater System (DEFAS) actuation?

(Assume NO EFAS or MSIS has actuated.)

A. 2 out of 4 Steam Generator levels less than 16% narrow range.

B. 1 out of 2 Steam Generator levels less than 16% wide range.

C. 2 out of 4 Steam Generator levels less than 21% narrow range.

D. 1 out of 2 Steam Generator levels less than 21% wide range.

Question 068

Which ONE (1) of the following conditions requires entry into a Technical Specification ACTION statement while Unit 2 is at 80% power?

A. Diesel Generator 2G002 Fuel Oil Day Tank level is 29 inches.

B. Fuel Oil Storage Tank 2T-035 level is 45,850 gallons.

C. Reactor Coolant System Tcold is 541ºF.

D. Charging Pump 2P-191 is tagged out for repairs.

Question 069

Given the following:

- A surveillance test on HPSI Pump P-017 was being performed in MODE 4.
- Plant conditions require Return-to-Service of HPSI Pump P-017 prior to completion of the surveillance.
- The surveillance will be completed next week outside its specified time frame.

Which ONE (1) of the following describes the notification requirements for the missed surveillance?

A. Immediately notify the Work Process Supervisor.

B. Notify the Work Process Supervisor within one (1) hour.

C. Immediately notify the SRO Operations Supervisor.

D. Notify the SRO Operations Supervisor within one (1) hour.

Question 070

Which ONE (1) of the following describes the MINIMUM requirement for Source Range Nuclear Instrumentation prior to commencing core off-load in MODE 6?

	Visual in CR	Audible in CR	Audible in CTMT
A.	2	0	1
B.	2	1	1
C.	1	1	1
D.	2	2	2

Question 071

A new SONGS employee has the following radiation exposure in 2007:

- US Navy – 1825 mrem.
- PG&E at Diablo Canyon – 90 mrem.

Without Health Physics Manager authorization, which ONE (1) of the following is the MAXIMUM dose this employee may receive at SONGS in 2007?

A. 85 mrem

B. 175 mrem

C. 1085 mrem

D. 1910 mrem

Question 072

An accessible area with a dose rate of 96 mrem per hour and contamination level of 32,550 DPM/100 CM^2 beta/gamma will be posted as a…

A. Contamination area and Radiation area

B. Contamination area and High Radiation area

C. High Contamination area and Radiation area

D. High Contamination area and High Radiation area

Question 073

Which ONE (1) of the following correctly describes a “valid fire” per SO23-13-21, Fire?

A. Annunciator 61A15 - FIRE DETECTED has alarmed in the Control Room.

B. A PEO reports that a Local Fire Detection Panel is in alarm.

C. Any FIRE PUMP RUNNING indication is annunciated in the Control Room.

D. Verbal confirmation of the fire is reported to the Control Room.

Question 074

Given the following:

- A Steam Generator Tube Rupture has occurred.
- The crew is performing SO23-12-4, Steam Generator Tube Rupture.
- RCS cooldown is in progress.

Which ONE (1) of the following describes the strategy for maintaining RCS pressure and temperature during the cooldown?

Maintain subcooling in the…

A. lower end of the Pressure/Temperature limits to allow backflow of ruptured SG into the RCS to prevent lifting SG safety valves.

B. lower end of the Pressure/Temperature limits to minimize RCS leakage.

C. higher end of the Pressure/Temperature limits to ensure continued RCP operation.

D. higher end of the Pressure/Temperature limits to prevent steam bubble formation in the Reactor vessel head.

Question 075

Which ONE (1) of the following annunciator window colors describes an ‘equipment priority’ alarm where a degradation of equipment functional capability has occurred?

A. RED

B. AMBER

C. WHITE

D. BLUE

U.S. Nuclear Regulatory Commission

SONGS 2007 SRO Written Examination

Applicant Information

Name:	
Date:	Facility/Unit:
Region: I / II / III / IV	Reactor Type: W / CE / BW / GE
Start Time:	Finish Time:

Instructions

Use the answer sheets provided to document your answers. Staple this cover sheet on top of the answer sheets. To pass the examination you must achieve a final grade of at least 80.00 percent overall, with a 70.00 percent or better on the SRO-only items if given in conjunction with the RO exam; SRO-only exams given alone require a final grade of 80.00 percent to pass. You have 8 hours to complete the combined examination, and 3 hours if you are only taking the SRO portion.

Applicant Certification

All work done on this examination is my own. I have neither given nor received aid.

_____
Applicant's Signature

Results

RO/SRO-Only/Total Examination Values	_____	/ _____	/ _____	Points
Applicant's Score	_____	/ _____	/ _____	Points
Applicant's Grade	_____	/ _____	/ _____	Percent

1.	A	B	C	D	26.	A	B	C	D
2.	A	B	C	D	27.	A	B	C	D
3.	A	B	C	D	28.	A	B	C	D
4.	A	B	C	D	29.	A	B	C	D
5.	A	B	C	D	30.	A	B	C	D
6.	A	B	C	D	31.	A	B	C	D
7.	A	B	C	D	32.	A	B	C	D
8.	A	B	C	D	33.	A	B	C	D
9.	A	B	C	D	34.	A	B	C	D
10.	A	B	C	D	35.	A	B	C	D
11.	A	B	C	D	36.	A	B	C	D
12.	A	B	C	D	37.	A	B	C	D
13.	A	B	C	D	38.	A	B	C	D
14.	A	B	C	D	39.	A	B	C	D
15.	A	B	C	D	40.	A	B	C	D
16.	A	B	C	D	41.	A	B	C	D
17.	A	B	C	D	42.	A	B	C	D
18.	A	B	C	D	43.	A	B	C	D
19.	A	B	C	D	44.	A	B	C	D
20.	A	B	C	D	45.	A	B	C	D
21.	A	B	C	D	46.	A	B	C	D
22.	A	B	C	D	47.	A	B	C	D
23.	A	B	C	D	48.	A	B	C	D
24.	A	B	C	D	49.	A	B	C	D
25.	A	B	C	D	50.	A	B	C	D

51.	A	B	C	D	76.	A	B	C	D
52.	A	B	C	D	77.	A	B	C	D
53.	A	B	C	D	78.	A	B	C	D
54.	A	B	C	D	79.	A	B	C	D
55.	A	B	C	D	80.	A	B	C	D
56.	A	B	C	D	81.	A	B	C	D
57.	A	B	C	D	82.	A	B	C	D
58.	A	B	C	D	83.	A	B	C	D
59.	A	B	C	D	84.	A	B	C	D
60.	A	B	C	D	85.	A	B	C	D
61.	A	B	C	D	86.	A	B	C	D
62.	A	B	C	D	87.	A	B	C	D
63.	A	B	C	D	88.	A	B	C	D
64.	A	B	C	D	89.	A	B	C	D
65.	A	B	C	D	90.	A	B	C	D
66.	A	B	C	D	91.	A	B	C	D
67.	A	B	C	D	92.	A	B	C	D
68.	A	B	C	D	93.	A	B	C	D
69.	A	B	C	D	94.	A	B	C	D
70.	A	B	C	D	95.	A	B	C	D
71.	A	B	C	D	96.	A	B	C	D
72.	A	B	C	D	97.	A	B	C	D
73.	A	B	C	D	98.	A	B	C	D
74.	A	B	C	D	99.	A	B	C	D
75.	A	B	C	D	100.	A	B	C	D

Question 001

Which ONE (1) of the following components acts to limit Reactor Coolant System leakage when the vapor seal fails on a Reactor Coolant Pump?

(Assume the lower, middle and upper seals are intact and functioning properly.)

A. Rotating baffle and shaft hydrostatic bushing.

B. Shaft hydrostatic bushing and O-rings.

C. Seal breakdown coil and rotating seal face.

D. Controlled bleedoff excess flow check valve and stationary carbon rings.

Question 002

Which ONE (1) of the following sets of conditions describes the automatic operation of the Reactor Coolant Pump Lube Oil Pumps?

A. The Normal Oil Lift Pump starts when RCP speed is less than 90%.
The Normal Anti-Reverse Rotation Device Pump starts when RCP speed is less than 90%.

B. The Normal Oil Lift Pump starts 15 seconds after the RCP is secured.
The Normal Anti-Reverse Rotation Device Pump starts when the RCP reaches zero speed.

C. The Normal Oil Lift Pump starts when RCP speed is less than 90%.
The Normal Anti-Reverse Rotation Device Pump starts when the RCP reaches zero speed.

D. The Normal Oil Lift Pump starts 15 seconds after the RCP is secured.
The Normal Anti-Reverse Rotation Device Pump starts when RCP speed is less than 90%.

Question 003

Given the following conditions:

- Unit 3 is in MODE 1 at 50% power at MOC.
- 3TV-0223, Letdown Heat Exchanger Temperature Control Valve fails closed.
- All control systems are in Automatic.
- Assume NO operator action.
- 3TV-0224B, Ion Exchanger Bypass Valve fails to go to BYPASS.

Which ONE (1) of the following describes the initial effect on the Pressurizer Level Control System?

Actual Pressurizer level _____ and Pressurizer level setpoint _____.

A. remains the same; remains the same

B. lowers; remains the same

C. remains the same; lowers

D. lowers; lowers

Question 004

Given the following conditions:

- Unit 2 is in MODE 5 on Shutdown Cooling (SDC) in the normal alignment.
- RCS temperature is being maintained constant at 150ºF.
- It is determined that SDC Pump (P-015) flow is too high for the current condition.

Which ONE (1) of the following is the preferred alignment for reducing the flowrate through the pump?

A. Ensure HV-8161, SDC HX Bypass Normal Block Valve is closed and then throttle closed HV-8160, SDC HX Bypass Normal Flow Control Valve.

B. Ensure HV-0396, SDC HX Bypass Standby Flow Control Valve is closed and then close HV-8161, SDC HX Bypass Normal Block Valve.

C. Ensure HV-0396, SDC HX Bypass Standby Flow Control Valve is closed and then throttle closed HV-8160, SDC HX Bypass Normal Flow Control Valve.

D. Ensure HV-8160, SDC HX Normal Bypass Flow Control Valve is closed and then throttle closed HV-0396, SDC HX Bypass Standby Flow Control Valve.

Question 005

Given the following conditions:

- Unit 3 is in MODE 5 with Shutdown Cooling (SDC) in service.
- RCS temperature is 190ºF.
- Train A SDC Heat Exchanger (HX) is in service and Train B SDC HX is in standby.
- Train B CCW is in standby.

Which ONE (1) of the following identifies the impact to the standby HX?

The Train B SDC HX…

A. will heat up to RCS temperature due to slow leakby through the SDC HX outlet valve.

B. maintains ambient conditions of SDC HX Room until the SDC HX outlet valve is opened.

C. SDC inlet valve must remain closed to prevent overpressurizing the HX.

D. may undergo potential tube damage due to ambient cooldown while isolated.

Question 006

Unit 3 has experienced a Loss of Offsite Power and a LOCA.

Which ONE (1) of the following Motor Control Center combinations will be available to power their respective ESFAS Valves?

A. 3BRA; 3BRB; 3BRC

B. 3BDX; 3BHX; 3BMX

C. 3BJ; 3BY;3BZ

D. 3BD; 3BE; 3BF

Question 007

Which ONE (1) of the following sets of conditions must be established within the Quench Tank prior to drawing a Pressurizer bubble?

A. Oxygen concentration must be maintained < 1% to prevent an explosive mixture from forming in the Quench Tank.

B. Oxygen concentration must be maintained < 5% in the event the Pressurizer or Reactor Head Vent Valves are opened.

C. Nitrogen pressure must be maintained > 1 psig to ensure a motive force for fluid to the Reactor Coolant Drain Tank.

D. Nitrogen pressure must be maintained > 5 psig to allow for purging of the Quench Tank.

Question 008

Given the following conditions:

- Unit 3 is in MODE 1 with Train A Component Cooling Water System in service.
- Normal makeup was initiated by the RO in response to a low level in the Train A Surge Tank.
- The Non-Critical Loop Isolation valves automatically closed during the makeup evolution.

Which ONE (1) of the following caused the Non-Critical Loop Isolation?

A. CCW Rad Monitor RE-7819 detected radiation in the Non-Critical Loop.

B. The Train A Component Cooling Water Surge Tank was overfilled.

C. A Safety Injection Actuation Signal has occurred.

D. Low suction pressure trip on the operating CCW Pump.

Question 009

Given the following conditions:

- Unit 2 has tripped from 100% power.
- Containment pressure is 3.6 psig and slowly rising.
- NO operator actions have been taken.

Which ONE (1) of the following identifies the automatic actions of the Component Cooling Water System?

A. SWC Outlet Valves from the standby CCW Heat Exchanger close.

B. CCW Supply and Return Lines to the Containment Normal Coolers open.

C. CCW Non-Critical Loop Isolation Valves close.

D. SDC Heat Exchangers CCW Outlet Valves open.

Question 010

Given the following conditions:

- Unit 2 is in MODE 5.
- Drawing a Pressurizer bubble is in progress.
- RCS temperature is 150ºF.
- The crew has just verified formation of a Pressurizer bubble.
- PV-0201A and PV-0201B, Letdown Backpressure Control Valves are fully open.
- RCS pressure is continuing to rise.

Which ONE (1) of the following will act to mitigate the RCS pressure rise?

A. Stop all but one Charging Pump to prevent a loss of Letdown flow.

B. Secure Charging Pumps and/or Pressurizer heaters to maintain pressure.

C. Throttle Letdown Flow Control Valves LV-0110A and LV-0110B open to allow PV-0201A and PV-0201B, Backpressure Control Valves to pass more flow.

D. Align LV-0227A, Volume Control Tank Inlet Valve to RADWASTE position to minimize backpressure on PV-0201A and PV-0201B.

Question 011

Which of the following Reactor Protection System bistables will automatically change state (trip) upon loss of power to an individual Core Protection Calculator (CPC)?

A. High LPD and low DNBR

B. Low DNBR and high linear power

C. High LPD and high linear power

D. High log power and low DNBR

Question 012

Which ONE (1) of the following statements describes the response of the Reactor Protection System to a loss of 120 VAC Vital Bus Y-03?

A. 2 of 8 Reactor trip breakers will open because their corresponding trip path deenergizes and the Reactor WILL trip.

B. 2 of 8 Reactor trip breakers will open because they share the instrument AC power supply and the Reactor WILL NOT trip.

C. 4 of 8 Reactor trip breakers will open because 2 trip paths will deenergize and the Reactor WILL NOT trip.

D. 4 of 8 Reactor trip breakers will open because 2 trip paths will deenergize and the Reactor WILL trip.

Question 013

Given the following conditions:

- A large break LOCA has occurred with a loss of offsite power.
- The rupture occurs on a Loop Cold Leg where SIT T-008 is connected to the RCS.
- RCS pressure immediately lowered to Containment pressure.
- Train A Emergency Diesel Generator has failed to start on an ESFAS signal.
- Train B Emergency Diesel Generator has just received its ESFAS signal to start.
- Safety Injection Tank pressures at the start of the transient were 600 psia.
- Reactor Vessel Plenum Level is 0%.

If this condition continues, which ONE (1) of the following describes the effect on the fuel assemblies?

A. Fuel failure will not occur. SIT injection pressure is insufficient to reflood the core.

B. Fuel failure will not occur. The large break LOCA analysis assumes one SIT does not inject.

C. Fuel failure may occur. SIT injection pressure is insufficient to reflood the core.

D. Fuel failure may occur. The large break LOCA analysis assumes one SIT does not inject.

Question 014

With Unit 2 operating at 100% power, which ONE (1) of the following conditions would require entry into a Technical Specification one (1) hour Limiting Condition of Operation?

A. A loss of three (3) Matrix Logic channels due to a common power source failure.

B. One (1) High Pressurizer Pressure trip channel is INOPERABLE.

C. A LPSI Pump is declared INOPERABLE following flow testing.

D. RWST temperature drops to 38ºF during a cold snap.

Question 015

Given the following conditions:

- Unit 3 in MODE 2.
- Turbine Plant Cooling Water flow to the running Containment Chiller is blocked.

Which ONE (1) of the following:

a.) Identifies the impact on the Containment Cooling System?

b.) What action should be taken to mitigate the situation?

A. a.) Containment Chiller trips on low TPCW Supply pressure.
b.) Place the Containment Emergency Cooling Units in service when Containment average air temperature exceeds 100ºF per SO23-1-4, Containment Normal Heat Removal.

B. a.) Containment Chill Water Pump trips on Chiller high condenser pressure.
b.) Place the Containment Emergency Cooling Units in service when Containment average air temperature exceeds 105ºF per SO23-1-4.1, Containment Emergency Cooling.

C. a.) Containment Chiller trips on low TPCW Supply pressure.
b.) Place the Standby Containment Chiller in service when Containment average air temperature exceeds 100ºF per SO23-1-4, Containment Normal Heat Removal.

D. a.) Containment Chill Water Pump trips on low suction pressure.
b.) Place the Standby Containment Chiller in service when Containment average air temperature exceeds 105ºF per SO23-1-4.1, Containment Emergency Cooling.

Question 016

Which ONE (1) of the following is the power supply to 2HV-9367, Train A Containment Spray Header Isolation Valve?

A. 2B09

B. 2BE

C. 2B08

D. 2BJ

Question 017

Given the following conditions:

- Unit 2 is at 100% power.
- 2FT-1021, Steam Generator E-088 Main Steam Flow Transmitter input to Steam Bypass Control System (SBCS) fails **low**.

Which ONE (1) of the following identifies the effect on the SBCS?

The Master Controller Remote Setpoint (black and white pen)…

A. rises to 1000 psia.

B. rises to 900 psia.

C. remains at 830 psia.

D. lowers to 650 psia.

Question 018

Which ONE (1) of the following describes the mitigation strategy for SO23-12-6, Loss of Feedwater?

A. Trip all RCPs; Attempt feedwater restoration; Control Pressure, Inventory and Heat Removal in the Functional Recovery Guidelines; Cooldown as required.

B. Trip one (1) RCP in each loop; Attempt feedwater restoration; Depressurize Steam Generators; Control Pressure, Inventory and Heat Removal.

C. Trip all RCPs; Minimize SG inventory loss; Attempt feedwater restoration; Control Pressure, Inventory and Heat Removal; Cooldown as required.

D. Trip one (1) RCP in each loop; Minimize SG inventory loss; Initiate cooldown at maximum rate; Control Pressure, Inventory and Heat Removal.

Question 019

Given the following conditions:

- Unit 2 was in MODE 2 at 1% power when a Reactor trip occurred.
- Steam Generator E-089 is at 20% narrow range level and 730 psia
- Steam Generator E-088 is at 19% narrow range level and 720 psia.

Which ONE (1) of the following identifies the discharge pressure of each Steam Generators Auxiliary Feedwater Pump?

AFW Pump P-141 is at _____. AFW Pump P-504 is at _____.

A. ~940 psig; ~930 psig

B. ~1350 psig; ~930 psig.

C. ~940 psig; ~1350 psig.

D. ~1350 psig; ~1350 psig.

Question 020

Which ONE (1) of the following sets of sump level alarms could be used to identify Auxiliary Feedwater System leakage?

A. Penetration, Component Cooling Water

B. Storage Tank, Containment

C. Safety Equipment Building, Control Building

D. Storage Tank, Penetration

Question 021

Which ONE (1) of the following sets of conditions must be met in order for a 6.9 kV bus to automatically transfer from the Unit 2 Unit Auxiliary Transformer to the Unit 2 Reserve Auxiliary Transformer?

A. 2XR3 energized with 6.9 kV supply breaker in AUTO.
2XR3 is not supplying 3A02.
2XU2 and 2XR3 lockout relays are reset.

B. 2XR2 energized with 6.9 kV supply breaker in AUTO.
2XR2 is not supplying 3A01.
2XU2 and 2XR2 lockout relays are reset.

C. 2XR1 energized with 6.9 kV supply breaker in AUTO.
2XR1 is not supplying 3A01.
2XU1 and 2XR1 lockout relays are reset.

D. 2XR3 energized with 6.9 kV supply breaker in AUTO.
2XR3 is not supplying 3A02.
2XU1 and 2XR3 lockout relays are reset.

Question 022

Train A, Train B, Train C, and Train D 1E DC electrical power subsystems shall be OPERABLE per Technical Specification 3.8.4 to support plant safety systems in which MODES?

A. Only MODES 1 and 2.

B. Only MODES 1, 2 and 3.

C. Only MODES 1, 2, 3 and 4.

D. Only MODES 1, 2, 3, 4, and 5.

Question 023

Which ONE (1) of the following identifies the impact to an Emergency Diesel Generator's Starting Air System when the outlet valve from air receivers T-335 and T-340 is isolated?

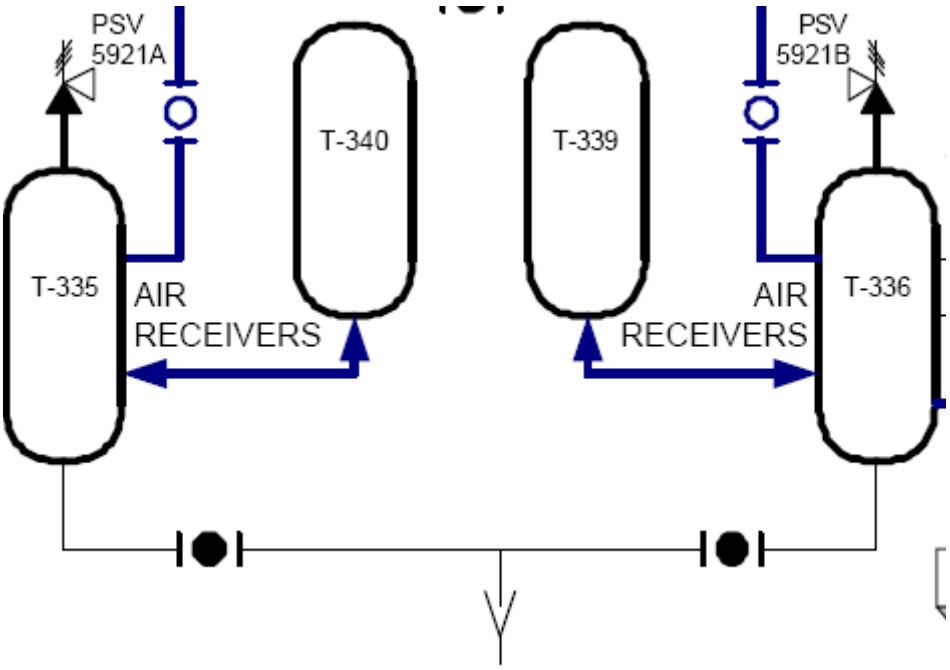

A. One Air Start Motor on each diesel continues to function.

B. Both sets of Air Start Motors on one diesel continue to function.

C. One set of Air Start Motors on each diesel continue to function.

D. Both sets of Air Start Motors on both diesels continue to function.

Question 024

Which ONE (1) of the following is the effect of a radiation signal that exceeds the setpoint to RE-7865, Plant Vent Stack Wide Range Radiation Monitor, when it is aligned to the Containment Purge Stack?

A radiation signal that exceeds the setpoint to RE-7865 would...

A. secure Continuous Exhaust Fans A-310, A-311 and A-312.

B. initiate a Containment Purge Isolation Signal (CPIS).

C. close the Outside Containment Purge Isolation Valves.

D. close FV-7202, Waste Gas Discharge Flow Control Valve.

Question 025

Which ONE (1) of the following describes the power supply arrangement for the Salt Water Cooling Valves?

CCW Heat Exchanger SWC Normal Outlet Valves (HV-6495 and HV-6497) are powered from _____ and Saltwater Emergency Discharge Valves (HV-6494 and HV-6496) are powered from _____.

A. 50' Control Building MCCs BY and BZ; 7' Turbine Building MCC BK

B. 7' Turbine Building MCC BK ; 50' Control Building MCCs BY and BZ

C. 7' Turbine Building MCC BM; 7' Turbine Building MCC BK

D. 50' Control Building MCC BY; 50' Control Building MCC BZ

Question 026

Given the following conditions:

- Unit 2 is in MODE 1.
- Train A Component Cooling Water (CCW) Pump P-025 is in service.
- Train A Salt Water Cooling (SWC) Pump P-112 is in service.
- CCW temperatures are rising.

Subsequently the following annunciator alarms are received:

- 64A35 - CCW HX TRAIN A DIFF PRESS HI.
- 64A55 - SWC TRAIN A FLOW TROUBLE.

Which ONE (1) of the following:

a.) Identifies the status of the Salt Water Cooling System?

b.) What action should be taken to mitigate the situation?

A. a.) Marine fouling is occurring.
b.) Start SWC Pump P-307 per SO23-2-8, SWC System Operation.

B. a.) SWC Pump P-112 performance is degrading.
b.) Transfer CCW to Train B per SO23-13-7, Loss of CCW/SWC.

C. a.) Marine fouling is occurring.
b.) Transfer CCW to Train B per SO23-13-7, Loss of CCW/SWC.

D. a.) SWC Pump P-112 performance is degrading.
b.) Start SWC Pump P-307 per SO23-2-8, SWC System Operation.

Question 027

Given the following conditions:

- A Unit trip has occurred due to a loss of Instrument Air.
- The Atmospheric Dump Valves were placed in AUTO / MODULATE and set at 1000 psia post trip.
- No other operator actions are taken.

Which ONE (1) of the following describes the condition of plant systems following the trip?

A. Letdown flow is isolated.
Main Steam Safety Valves are maintaining SG pressure due to loss of the Atmospheric Dump Valves.

B. Letdown flow is at a minimum.
Atmospheric Dump Valves are controlling SG pressure.

C. Letdown flow is isolated.
Atmospheric Dump Valves are controlling SG pressure.

D. Letdown flow is at a minimum.
Main Steam Safety Valves are maintaining SG pressure due to loss of the Atmospheric Dump Valves.

Question 028

A Containment Isolation Actuation Signal has occurred.

Which ONE (1) of the following sets of valve “CLOSE” indications could be used to make that determination?

A. HV-9920, Containment Normal Cooling System Supply Isolation Valve.
HV-9304, Containment Emergency Sump Outlet Isolation Valve.
HV-8205, Steam Generator E-088 Main Steam Isolation Valve.

B. HV-9823, Containment Mini-Purge Supply Isolation Valve.
HV-5437, Nitrogen to Containment Isolation Valve.
HV-6211, Non-Critical Loop Containment Isolation Valve.

C. HV-9825, Containment Mini-Purge Exhaust Isolation Valve.
HV-4714, Steam Generator E-088 AFW Containment Isolation Valve.
HV-9971, Containment Normal Cooling System Return Isolation Valve.

D. HV-9336, SDC to LPSI Pump Suction Containment Isolation Valve.
HV-9205, Letdown Containment Isolation Valve.
HV-5803, Containment Sump Radwaste Isolation Valve.

Question 029

Given the following conditions:

- Unit 2 is shutting down from 100% power.
- CEAs are being inserted for Axial Shape Index control.
- Annunciator 56B45 - RCS SUBCOOLED MARGIN LO has just alarmed.
- The Subcooled Margin Monitor (SCM) Display on CR-56 is not available.

Which ONE (1) of the following would be used to determine the most conservative subcooled margin?

A. Observe “HEAD” and verify SCM on the DLMS.

B. Observe “CET” and verify SCM on the QSPDS.

C. Observe “HEAD” and verify SCM on the QSPDS.

D. Observe “CET” and verify SCM on the DLMS.

Question 030

Which ONE (1) of the following inputs is used to enable the 55% Loss of Load bistable?

A. Linear Power.

B. Hydraulic oil pressure from the Main Turbine HP Stop Valves.

C. Log Channel Power.

D. Valve position indication of the Main Turbine HP Stop Valves.

Question 031

Given the following conditions:

- Representative Core Exit Thermocouple (REP CET) value is 560ºF.
- A CET that was previously indicating 560ºF has an open circuit.

Which ONE (1) of the following identifies the impact that the CET open circuit failure has on the REP CET value used for verification of Natural Circulation?

The REP CET calculated value…

A. does not change, the failed CET input is NOT used by QSPDS.

B. indicates higher, the failed CET input is NOT used by QSPDS.

C. indicates lower, the failed CET input is flagged but used by QSPDS.

D. does not change, the failed CET input is flagged but used by QSPDS.

Question 032

A loss of Non-1E Instrument Bus Q0612 has occurred on Unit 3 while at full power. The RO is directed to place the Steam Bypass Control System (SBCS) Master Controller in MANUAL per SO23-13-19, Loss of Non-1E Instrument Buses.

Which ONE (1) of the following is the reason for placing the Steam Bypass Control System in MANUAL?

A. Minimize load across 3VS612, Instrument Bus Transfer Switch, when taken to the EMERGENCY position.

B. Prevent the SBCS Valves from inadvertently opening when Q0612 is reenergized.

C. To avoid defeating the single failure design of the SBCS.

D. Prevent a power excursion as the valve permissives are in MANUAL.

Question 033

Given the following conditions:

- A Containment Purge is in progress.
- RE-7865, Plant Vent Stack Radiation Monitor is aligned to the Purge Stack.
- Radiography in the vicinity of RE-7807, Containment Airborne Radiation Monitor has placed it in alarm.

Which ONE (1) of the following identifies the result of RE-7807 going into alarm?

A. Initiates a Containment Purge Isolation Signal.

B. Closes only the outside Containment Purge Isolation Valves.

C. Secures Continuous Exhaust Fans A-310, A-311 and A-312.

D. Closes only the inside Containment Purge Isolation Valves.

Question 034

Which ONE (1) of the following responses is expected immediately following the opening of a Steam Bypass Control Valve at 50% power?

Steam Generator Narrow Range level…

A. swells due to an increase in SG downcomer mass.

B. shrinks due to lowering SG pressure.

C. swells due to an increase in density of the SG liquid-vapor mixture.

D. shrinks due to collapse of bubbles in the tube bundle region.

Question 035

Which ONE (1) of the following is the setpoint of the overspeed trip on the Main Turbine?

A. 1890 rpm

B. 1926 rpm

C. 1980 rpm

D. 2034 rpm

Question 036

Given the following conditions:

- A liquid release of T-057, Radwaste Secondary Tank has been in progress for five (5) minutes using release valve 2/3HV-7641, Radwaste Discharge.
- The release was automatically terminated due to high radiation as sensed by 2/3 RE-7813, Radwaste Discharge Line Radiation Monitor.
- Review of the Release Permit has identified an insufficient recirculation of T-057, Radwaste Secondary Tank prior to release.

Which ONE (1) of the following actions should be taken to correct the situation?

A. Perform a one (1) volume recirculation of T-057.
Re-sample and finish releasing the tank per the current in use attachment.

B. Perform a four (4) volume recirculation of T-057.
Complete the release attachment, re-sample and initiate a new attachment to finish releasing the tank.

C. Perform a one (1) volume recirculation of T-057.
Complete the release attachment, re-sample and initiate a new attachment to finish releasing the tank.

D. Perform a four (4) volume recirculation of T-057.
Re-sample and finish releasing the tank per the current in use attachment.

Question 037

Which ONE (1) of the following identifies the change in the Control Room ventilation alignment when a high radiation signal is received on 2/3RE-7824G1 & 2/3RE-7825G2, Control Room Intake Air Train A and B Radiation Monitors?

A. 2/3 A-206 and 2/3 A-207, Emergency Ventilation Supply Fans are started.
94% of the Control Room Complex air is recycled.
2/3 E-335 and 2/3 E-336, Emergency Chiller Units are started.

B. 2/3 A-206 and 2/3 A-207, Emergency Ventilation Supply Fans are secured.
100% of the Control Room Complex air is recycled.
2/3 E-335 and 2/3 E-336, Emergency Chiller Units are started

C. 2/3 A-206 and 2/3 A-207, Emergency Ventilation Supply Fans are secured.
94% of the Control Room Complex air is recycled.
2/3 A-201 and 2/3 A-202, Control Room Complex Exhaust Fans are secured

D. 2/3 A-206 and 2/3 A-207, Emergency Ventilation Supply Fans are started.
100% of the Control Room Complex air is recycled.
2/3 A-201 and 2/3 A-202, Control Room Complex Exhaust Fans are secured.

Question 038

Instrument air pressure has been steadily decreasing from 105 psig as read on CR-61 2/3 PI-5344A. Pressure continues to decrease until it stabilizes at 86 psig.

Which ONE (1) of the following actions occurred that caused pressure to stabilize?

A. The LAG 1 Instrument Air Compressor started and is fully loaded.

B. PCV-5354, Respiratory and Service Air cross-connect valve has opened.

C. PCV-5458, Nitrogen Backup to Instrument Air supply valve has opened.

D. The LEAD 1 Instrument Air Compressor started and is fully loaded.

Question 039

Given the following conditions:

- Unit 2 is performing the SO23-12-7, Loss of Forced Circulation / Loss of Offsite Power following a loss of offsite power.
- The following Annunciators alarm in the Control Room:
  - 63A33 - 2D2 125 VDC BUS TROUBLE
  - 63A43 - 2D2 CHARGER TROUBLE
- The PEO has verified that 2D2 Battery Breaker is open.
- DC Bus 2D2 indicates 129 VDC.

Which ONE (1) of the following actions is required?

A. Declare DC Bus 2D2 INOPERABLE due to low battery voltage.

B. Perform one re-close attempt of the battery breaker (breaker remains open), and then leave the Y-002 Inverter in service.

C. Verify proper operation of Y-002 Inverter in its current configuration.

D. Check 2D2 for a battery ground and remove Y-002 Inverter from service if an Inverter DC side ground is identified.

Question 040

Given the following conditions:

- Pressurizer pressure is slowly lowering.
- Pressurizer level is slowly rising.
- Containment humidity is slowly rising.
- Pressurizer vapor space temperature is slowly lowering.
- Subcooled Margin is slowly lowering.
- No automatic actions have occurred.

Which ONE (1) of the following is the reason for the conditions listed?

A Pressurizer…

A. safety valve has minor seat leakage.

B. Spray valve is open.

C. level condensing pot is leaking.

D. heater weld is leaking.

Question 041

Given the following conditions:

- A small break LOCA is in progress on Unit 3 in MODE 1.
- Both Trains of CCW are in service.

Due to equipment malfunctions the following alignment occurs:

- The CCW Letdown Heat Exchanger is aligned to Train A.
- The CCW Non-Critical Loop is aligned to Train B.
- RE-7819, CCW Process Radiation Monitor goes into alarm.

Which ONE (1) of the following is the location of the leak?

A. Letdown Heat Exchanger.

B. RCS Hot Leg Sample Cooler.

C. Shutdown Cooling Heat Exchanger.

D. RCP Seal Cooler.

Question 042

Given the following Unit 2 conditions:

- SIAS actuated due to a LOCA.
- Both HPSI Pumps are tripped.
- RCS pressure is 450 psia.
- RCS temperature is 430°F.
- Containment pressure is 2.5 psig.
- All other equipment is running per design.
- The crew is performing actions of SO23-12-1, Standard Post Trip Actions.

Which ONE (1) of the following describes the required action and associated reason regarding operation of the RCPs?

A. Stop two RCPs and leave two RCPs running to provide forced cooling flow of the RCS.

B. Stop two RCPs and leave two RCPs running to minimize fluid mass loss out of the break.

C. Stop all RCPs to prevent phase separation of RCS liquid.

D. Stop all RCPs due to loss of Net Positive Suction Head.

Question 043

Given the following conditions for Reactor Coolant Pump (RCP) P-004:

- Lower Seal pressure is 2235 psia.
- Middle and Upper Seal pressures are oscillating between 75 and 2235 psia.
- Vapor Seal Cavity pressure is 75 psia.
- Controlled Bleed-Off flow is lost.

Which ONE (1) of the following is the required action and reason for the given set of conditions?

A. Immediately trip the Reactor.
When CEAs have been inserted for 5 seconds, trip RCP P-004 to prevent exceeding DNBR.

B. Initiate a plant shutdown.
Trip the Reactor and trip RCP P-004 to preserve the Vapor Seal and prevent a small break LOCA.

C. Immediately trip the Reactor.
After 5 seconds trip RCP P-004 to prevent exceeding local power density (LPD) setpoints.

D. Initiate a plant shutdown.
When the Reactor is tripped and CEAs have been inserted for 5 seconds, trip RCP P-004 to prevent exceeding local power density (LPD) setpoints.

Question 044

With the Unit at 100% power, which ONE (1) of the following would cause a loss of Letdown flow?

A. LV-0227A, Volume Control Tank Inlet Valve fails to RADWASTE position.

B. E-063, Regen Heat Exchanger outlet temperature of 450ºF

C. E-062, Letdown Heat Exchanger outlet temperature of 150ºF.

D. 80 GPM Letdown flow with only one Charging Pump running.

Question 045

Given the following conditions:

- Unit 2 was cooling down to MODE 5 with Train A Shutdown Cooling (SDC) in service.
- RCS cooldown rate was 20ºF per hour when a loss of Train A SDC Pump occurred.
- RCS temperature is 300ºF.
- When the Train B SDC Pump was started the cooldown rate rose to 50ºF per hour.

Which ONE (1) of the following describes the actions necessary to continue with the RCS cooldown per SO23-13-15, Loss of Shutdown Cooling?

A. Throttle closed the SDC HX Bypass Flow Control Valve to establish a minimum flowrate of 2750 gpm.
Throttle closed the SDC Heat Exchanger Outlet Valve to establish the required cooldown rate.

B. Throttle open the SDC HX Bypass Flow Control Valve to establish a minimum flowrate of 2500 gpm.
Throttle closed the SDC Heat Exchanger Outlet Valve to establish the required cooldown rate.

C. Throttle closed the SDC HX Bypass Flow Control Valve to establish a minimum flowrate of 2750 gpm.
Throttle open the SDC Heat Exchanger Outlet Valve to establish the required cooldown rate.

D. Throttle open the SDC HX Bypass Flow Control Valve to establish a minimum flowrate of 2500 gpm.
Throttle open the SDC Heat Exchanger Outlet Valve to establish the required cooldown rate.

Question 046

Given the following plant conditions:

- Unit 2 is in MODE 5 on Shutdown Cooling (SDC).
- A total loss of Component Cooling Water (CCW) occurs on Unit 2.

Which ONE (1) of the following actions is required to restore cooling to Unit 2 Reactor Coolant System?

A. Allow the RCS to heatup and use the Steam Generators for heat removal.

B. Cross connect CCW through the Instrument Air System.

C. Cross connect CCW through the Radwaste System Supply and Return Headers.

D. Align the fire main to the SDC Heat Exchangers.

Question 047

Given the following conditions:

- Pressurizer Pressure Channel Y is in service.
- Pressurizer Pressure indication PT-0100Y has failed high.
- HS-0100A, Pressurizer Pressure Channel Selector is in the Channel Y position.
- An inadvertent SIAS has occurred.
- Pressurizer Pressure is 2150 psia and slowly lowering.

Which ONE (1) of the following is required to restore operation of the 1E Pressurizer heaters?

A. Transfer PZR Pressure Control to Channel X.
Restore 1E PZR Heaters by going to OVERRIDE, then OFF, then AUTO.

B. Reset the SIAS signal.
Restore 1E PZR Heaters by going to OFF, then ON, then AUTO.

C. Transfer PZR Pressure Control to Channel X.
Restore 1E PZR Heaters by going to OFF, then ON, then AUTO.

D. Reset the SIAS signal.
Restore 1E PZR Heaters by going to OVERRIDE, then OFF, then AUTO.

Question 048

Which ONE (1) of the following describes the conditions necessary to perform an asymmetric Steam Generator natural circulation cooldown following a Steam Generator Tube Rupture?

A. Limit the cooldown rate of the steaming SG.
Maintain a stable non-divergent ΔT between RCS loops.

B. Maximize the cooldown rate of the steaming SG.
Maintain a stable divergent ΔT between RCS loops.

C. Limit the cooldown rate of the steaming SG.
Maintain a stable divergent ΔT between RCS loops.

D. Maximize the cooldown rate of the steaming SG.
Maintain a stable non-divergent ΔT between RCS loops.

Question 049

Given the following conditions:

- A Station Blackout is in progress on both Units.
- SO23-12-11, EOI Supporting Attachments, Attachment 9, Control Building Ventilation Emergency Actions must be performed.

Which ONE (1) of the following is the time associated with performing Attachment 9 and the reason for this action?

Open the Control Room cabinet doors within…

A. 15 minutes of loss of Control Room Ventilation to prevent spurious actuation of relays.

B. 30 minutes of loss of Control Room Ventilation to prevent damage to equipment due to overheating.

C. 45 minutes of loss of Control Room Ventilation to prevent spurious actuation of relays.

D. 60 minutes of loss of Control Room Ventilation to prevent damage to equipment due to overheating.

Question 050

Given the following conditions:

- Unit 2 is at 100% when a Loss of Offsite Power occurs.
- 4160 Volt Buses 2A03 and 2A07 become de-energized.
- The Main Steam Isolation Valves and Steam Generator Blowdown Valves must be closed.
- EFAS-1 and EFAS-2 have actuated.

Which ONE (1) of the following states the reason for closing these valves manually vice initiating a Main Steam Isolation Signal?

A. Auxiliary Feedwater flow would be interrupted when SG levels went below 21%.

B. Steam Generator Blowdown Valves could not be re-opened.

C. Main Feedwater flow would be interrupted until it is overridden.

D. Atmospheric Dump Valves would be isolated until they are overridden.

Question 051

Given the following conditions:

- Unit 3 is at 100% power
- The following Annunciators are in alarm:
  - 56A02 - LOG POWER LEVEL HI CHANNEL TRIP
  - 56A03 - LOCAL POWER DENSITY HI CHANNEL TRIP
  - 56A04 - DNBR LO CHANNEL TRIP
- Pressurizer pressure is aligned to Channel Y and is 2235 psia and steady.
- Pressurizer level is aligned to Channel Y and is 53% and steady.
- Reactor Trip Path 3 and 4 lights are **extinguished**.
- Plant Protection System bistables on Channels A and C ROMs are **not tripped**.

Which ONE (1) of the following Vital AC Buses has been lost?

A. Vital Bus 1.

B. Vital Bus 2.

C. Vital Bus 3.

D. Vital Bus 4.

Question 052

Given the following conditions:

- Unit 2 is in MODE 3 and the following alarms have been received:
  - 63A32 - 2D1 125 VDC BUS TROUBLE
  - 63A52 - 2D1 CHARGER TROUBLE
- It was determined that the 2D1 Battery Charger has malfunctioned.

Which ONE (1) of the following actions is required to maintain power to the DC bus?

A. Open the 2D1 Battery Breaker and cross-tie DC Bus 2 with DC Bus 1.

B. Minimize DC loads and place the Spare Battery in service.

C. Minimize DC loads and place the Spare Battery Charger in service.

D. Open the 2D1 Battery Breaker and cross-tie DC Bus 3 with DC Bus 1.

Question 053

SO23-13-7, Loss of CCW/SWC contains guidance to start the affected train CCW Pump prior to the SWC Pump start while recovering from the loss of a SWC Pump.

Which ONE (1) of the following is the reason for this action?

A. Ensures the CCW radiation monitor is in service in the event of CCW leakage into SWC.

B. Prevent thermal shock of the CCW Heat Exchanger.

C. CCW System provides cooling for the CCW Pump seal.

D. Prevent saltwater from entering the CCW System in the event of a tube leak.

Question 054

Given the following conditions:

- Power level is 25%.
- Pressurizer pressure is rising.
- An ATWS is in progress.
- All attempts to trip the Reactor have failed.
- Emergency Boration is being initiated.
- The BAMU Pumps will NOT start.

Which ONE (1) of the following sources of boron will have the greatest impact on core reactivity and why?

A. BAMU Tanks because of the higher flowrate.

B. BAMU Tanks because of the higher boron concentration.

C. RWST because of the higher head of the RWST Tank.

D. RWST because of the closer connection to the Charging Pump suction.

Question 055

Given the following conditions:

- Steam Generator (SG) E-089 Excess Steam Demand Event (ESDE) has occurred inside Containment.
- SG E-089 wide range level is 0% (dryout).
- SG E-088 narrow range level is 34%.
- EFAS-2 was actuated post-trip while EFAS-1 was not.
- The crew is preparing to reset ESFAS Functions per SO23-12-5, ESDE.

Based on the Caution for resetting a Main Steam Isolation Signal, what actions should be taken and why?

A. MSIS can be reset. Limit the flowrate to SG E-088 to avoid collapsing the feed ring.

B. MSIS should **not** be reset. AFW flow may initiate to SG E-089 and result in a Steam Generator tube rupture.

C. MSIS can be reset. Limit the flowrate to SG E-088 to avoid Pressurized Thermal Shock concerns.

D. MSIS should **not** be reset. AFW flow may initiate to SG E-089 and collapse the feed ring.

Question 056

Given the following conditions:

- Unit 2 is recovering from a loss of feedwater.
- Plant temperature is stable at 545ºF.
- Main Feedwater will be used to feed the Steam Generators.
- There is no Main Feedwater Pump running at this time.

Which ONE (1) of the following identifies the actions required to start a Main Feedwater Pump?

A. Ensure the Motor Speed Controller (MSC) and Electric Automatic Positioner (EAP) are at the low speed stop.
Reset the MFWPT and verify the MFWPT HP and LP Stop Valves are open.

B. Ensure the Motor Speed Controller (MSC) and Electric Automatic Positioner (EAP) are at the high speed stop.
Reset the MFWPT and verify the MFWPT HP and LP Stop Valves are closed.

C. Ensure the Motor Speed Controller (MSC) and Electric Automatic Positioner (EAP) are at the high speed stop.
Reset the MFWPT and verify the MFWPT HP and LP Stop Valves are open.

D. Ensure the Motor Speed Controller (MSC) and Electric Automatic Positioner (EAP) are at the low speed stop.
Reset the MFWPT and verify the MFWPT HP and LP Stop Valves are closed.

Question 057

Given the following conditions:

- Unit 2 is at 65% power.
- A power ascension is in progress.
- The RO is withdrawing Group 6 CEAs when a CEDMCS malfunction causes continuous withdrawal of Group 6 CEAs.

Assuming no other operator actions are taken (no manipulations of any controls / systems), which ONE (1) of the following actions is required?

A. Place the CEDMCS Selector Switch in OFF.
If CEA withdrawal continues, reposition the Bank Selector Switch to any other CEA Group than Group 6.

B. Depress Reactor Trip Switches 2HS-9132-1 through 2HS-9132-4 to open all Reactor Trip Breakers.
If Reactor fails to trip, open MG Set Output Breakers by deenergizing Load Centers 2B16 and 2B17.

C. Place the CEDMCS Selector Switch in OFF.
If CEA withdrawal continues, depress Reactor Trip Switches 2HS-9132-1 through 2HS-9132-4 to open all Reactor Trip Breakers.

D. Depress Reactor Trip Switches 2HS-9132-1 through 2HS-9132-4 to open all Reactor Trip Breakers.
If Reactor fails to trip, open MG Set Output Breakers by deenergizing Load Centers 2B14 and 2B15.

Question 058

Given the following conditions:

- An ATWS has occurred at 90% power.
- The feeder breaker to Bus B04 has opened.
- An emergency boration is started in accordance with SO23-13-11, Emergency Boration of the RCS/Inadvertent Dilution or Boration.
- SIAS has NOT actuated.

Which ONE (1) of the following is the reason for the listed valve position during an emergency boration?

A. LV-0227B, VCT Outlet Valve is in MANUAL and CLOSED to prevent VCT pressure from stopping gravity feed flow.

B. LV-0227B, VCT Outlet Valve is in MANUAL and CLOSED to allow the BAMU Pump head to reach the Charging Pump suction.

C. FV-9253, Blended Makeup to VCT Isolation Valve is in MANUAL and CLOSED to prevent bypass flow from the blend tee to the VCT.

D. FV-9253, Blended Makeup to VCT Isolation Valve is in MANUAL and CLOSED to allow borated water to flow from the RWST when BAMU tanks empty.

Question 059

Given the following conditions:

- Pressurizer Level Channel X is in service.
- A leak develops on the Pressurizer Channel X reference leg.

Which ONE (1) of the following identifies the difference between indicated and actual Pressurizer level?

A. Indicated level rises; Actual level lowers.

B. Indicated level rises; Actual level rises.

C. Indicated level lowers; Actual level lowers.

D. Indicated level lowers; Actual level rises.

Question 060

Given the following conditions:

- The Unit is in MODE 6 with refueling in progress.
- The Fuel Transfer Tube is open.
- Both Spent Fuel Pool Gates are open.

Which ONE (1) of the following identifies the Radiation Monitors which would be the first to indicate a Fuel Handling Accident has occurred inside Containment?

A. RE-7845, Containment Personnel Lock Area Radiation Monitor
RE-7822, Fuel Handling Building Airborne Radiation Monitor

B. RE-7845, Containment Personnel Lock Area Radiation Monitor
RE-7848, Containment Building 30' Area Radiation Monitor

C. RE-7848, Containment Building 30' Area Radiation Monitor
RE-7823, Fuel Handling Building Airborne Radiation Monitor

D. RE-7822, Fuel Handling Building Airborne Radiation Monitor
RE-7823, Fuel Handling Building Airborne Radiation Monitor

Question 061

Given the following conditions:

- SO23-13-14, Reactor Coolant Leak was entered for a Steam Generator tube leak on SG E-089.
- While performing steps in SO23-13-14, several tubes failed and the crew transitioned to SO23-12-4, Steam Generator Tube Rupture.
- Actions of SO23-12-4, Steam Generator Tube Rupture are in effect with the crew preparing to place the Shutdown Cooling System in service.
- RCS pressure is 330 psia and slowly lowering.
- RCS Thot is 360ºF and slowly rising.
- Reactor Vessel Plenum level is 80%.

Which ONE (1) of the following actions is required and what is the reason for that action?

A. Continue to bleed steam from Steam Generator E-089 as SDC entry conditions are not met.

B. Restore Reactor Vessel Plenum level to greater than or equal to 100% to ensure the hot legs are full and SDC will operate unimpeded.

C. Lower Core Exit Saturation Margin and maintain as close to 20ºF as possible to minimize primary to secondary leakage.

D. Restore Reactor Vessel Head level to 100% to ensure adequate reserve volume in the RCS during the cooldown.

Question 062

Given the following:

- The plant is at 100% power.
- NO radioactive releases are in progress.
- P-168, Radwaste Primary Pump has developed a leak while pumping 2/3 T-066, Radwaste Primary Tank contents through the Radwaste Secondary Ion Exchanger.

Which ONE (1) of the following radiation monitors will be the first to indicate the leak?

A. RE-7813, Radwaste Discharge Line Monitor.

B. RE-7865, Plant Vent Stack Wide Range Monitor.

C. RE-7828, Containment Purge Stack Monitor.

D. RE-7838, Sample Lab Isolation Monitor.

Question 063

Given the following Unit 3 conditions:

- The Control Room was evacuated 15 minutes ago due to dense smoke.
- SO23-13-2, Shutdown from Outside the Control Room is in progress.
- Attachment 9, 33 Duties is being performed to establish AFW flow to the Steam Generator E-088.
- 3MP-141, Auxiliary Feedwater Pump is the only available AFW source.
- SG 3ME-088 is at 10% narrow range level.
- SG 3ME-089 is at 65% narrow range level.

Which ONE (1) of the following sets of actions will align flow to Steam Generator 3ME-088?

A. UNLOCK and OPEN S31305MU634, 3MP-504/3MP-141 Cross-connect.
UNLOCK and OPEN S31305MU635, 3MP-141/3MP-504 Cross-connect.

B. UNLOCK and OPEN S31305MU635, 3MP-141/3MP-504 Cross-connect.
Ensure S31305MU634, 3MP-504/3MP-141 Cross-connect is CLOSED.

C. UNLOCK and OPEN S31305MU634, 3MP-504/3MP-141 Cross-connect.
Ensure S31305MU635, 3MP-141/3MP-504 Cross-connect is CLOSED.

D. OPEN 3HV-4705, 3MP-140 Turbine Pump Discharge to SG E-088.
OPEN 3HV-4706, 3MP-140 Turbine Pump Discharge to SG E-089.

Question 064

Given the following:

- Unit 2 is at 90% power and is scheduled for a Refueling shutdown.
- Chemistry reports that gross gamma activity and fission product gases have increased in the Reactor Coolant.

Which ONE (1) of the following sets of actions will have the greatest effect at reducing fission product gases in the Reactor Coolant System?

A. Force Pressurizer Spray using Proportional Heaters.
Align PZR Degas to the VCT to maximize degas effect.

B. Force Pressurizer Spray using Proportional Heaters.
Align PZR Degas to the Radwaste header to maximize degas effect.

C. Force Pressurizer Spray using Proportional and Backup Heaters.
Align PZR Degas to the VCT to maximize degas effect.

D. Force Pressurizer Spray using Proportional and Backup Heaters.
Align PZR Degas to the Radwaste header to maximize degas effect.

Question 065

Given the following conditions:

- The crew has entered SO23-12-9, Functional Recovery.
- Natural Circulation conditions exist in the RCS.
- Preparations are being made to cooldown on Natural Circulation to Shutdown Cooling entry conditions.
- No RAS has occurred.

Which ONE (1) of the following is the operational implication of performing a Natural Circulation cooldown in this condition?

A. Voiding in the head is NOT expected to occur.
Collapse any voids when Reactor Vessel Head level is less than 100% to prevent gas binding of the SDC Pumps when placed in service.

B. Voiding in the head is expected to occur.
Collapse the void when Reactor Vessel Head level is less than 100% to prevent disruption of Natural Circulation.

C. Voiding in the head is NOT expected to occur.
Collapse any voids when Plenum level is less than 100% to prevent disruption of Natural Circulation.

D. Voiding in the head is expected to occur.
Collapse the void when Plenum level is less than 100% to prevent gas binding of the SDC Pumps when placed in service.

Question 066

Unit 2 is in MODE 3 with plant status as follows:

- Main Feedwater is secured.
- Auxiliary Feedwater Pumps P-141 and P-504 are running to provide feedwater to the Steam Generators.
- Fire in a cable tray located in 45' Penetration Building has disabled 2LI-3204-2 (Condensate Storage Tank T-121 level indication) on CR-53.
- Unit 2 CRS has entered SO23-13-21, Fire.
- The CRS has directed you to proceed with SO23-13-21, Attachment 3 for local monitoring of Condensate Storage Tank T-121 level.
- Condensate Storage Tanks T-121 and T-120 are NOT cross-connected.

    - 2PI-3394L = 9.0 psig
    - 2PI-4701 = 8.0 psig
    - 2PI-4708 = 6.5 psig
    - 2PI-4734 = 7.0 psig

Which ONE (1) of the following is the quantity of makeup water that is available per Attachment 3?

A. 87,303 gallons

B. 93,755 gallons

C. 105,950 gallons

D. 118,201 gallons

Question 067

Which ONE (1) of the following are the minimum plant conditions required to have a Diverse Emergency Feedwater System (DEFAS) actuation?

(Assume NO EFAS or MSIS has actuated.)

A. 2 out of 4 Steam Generator levels less than 16% narrow range.

B. 1 out of 2 Steam Generator levels less than 16% wide range.

C. 2 out of 4 Steam Generator levels less than 21% narrow range.

D. 1 out of 2 Steam Generator levels less than 21% wide range.

Question 068

Which ONE (1) of the following conditions requires entry into a Technical Specification ACTION statement while Unit 2 is at 80% power?

A. Diesel Generator 2G002 Fuel Oil Day Tank level is 29 inches.

B. Fuel Oil Storage Tank 2T-035 level is 45,850 gallons.

C. Reactor Coolant System Tcold is 541ºF.

D. Charging Pump 2P-191 is tagged out for repairs.

Question 069

Given the following:

- A surveillance test on HPSI Pump P-017 was being performed in MODE 4.
- Plant conditions require Return-to-Service of HPSI Pump P-017 prior to completion of the surveillance.
- The surveillance will be completed next week outside its specified time frame.

Which ONE (1) of the following describes the notification requirements for the missed surveillance?

A. Immediately notify the Work Process Supervisor.

B. Notify the Work Process Supervisor within one (1) hour.

C. Immediately notify the SRO Operations Supervisor.

D. Notify the SRO Operations Supervisor within one (1) hour.

Question 070

Which ONE (1) of the following describes the MINIMUM requirement for Source Range Nuclear Instrumentation prior to commencing core off-load in MODE 6?

	Visual in CR	Audible in CR	Audible in CTMT
A.	2	0	1
B.	2	1	1
C.	1	1	1
D.	2	2	2

Question 071

A new SONGS employee has the following radiation exposure in 2007:

- US Navy – 1825 mrem.
- PG&E at Diablo Canyon – 90 mrem.

Without Health Physics Manager authorization, which ONE (1) of the following is the MAXIMUM dose this employee may receive at SONGS in 2007?

A. 85 mrem

B. 175 mrem

C. 1085 mrem

D. 1910 mrem

Question 072

An accessible area with a dose rate of 96 mrem per hour and contamination level of 32,550 DPM/100 CM^2 beta/gamma will be posted as a…

A. Contamination area and Radiation area

B. Contamination area and High Radiation area

C. High Contamination area and Radiation area

D. High Contamination area and High Radiation area

Question 073

Which ONE (1) of the following correctly describes a “valid fire” per SO23-13-21, Fire?

A. Annunciator 61A15 - FIRE DETECTED has alarmed in the Control Room.

B. A PEO reports that a Local Fire Detection Panel is in alarm.

C. Any FIRE PUMP RUNNING indication is annunciated in the Control Room.

D. Verbal confirmation of the fire is reported to the Control Room.

Question 074

Given the following:

- A Steam Generator Tube Rupture has occurred.
- The crew is performing SO23-12-4, Steam Generator Tube Rupture.
- RCS cooldown is in progress.

Which ONE (1) of the following describes the strategy for maintaining RCS pressure and temperature during the cooldown?

Maintain subcooling in the…

A. lower end of the Pressure/Temperature limits to allow backflow of ruptured SG into the RCS to prevent lifting SG safety valves.

B. lower end of the Pressure/Temperature limits to minimize RCS leakage.

C. higher end of the Pressure/Temperature limits to ensure continued RCP operation.

D. higher end of the Pressure/Temperature limits to prevent steam bubble formation in the Reactor vessel head.

Question 075

Which ONE (1) of the following annunciator window colors describes an ‘equipment priority’ alarm where a degradation of equipment functional capability has occurred?

A. RED

B. AMBER

C. WHITE

D. BLUE

Question 076

Given the following:

- A manual Reactor trip has been attempted.
- All Full-length CEAs remain out.
- An operator has been dispatched to open the Reactor Trip circuit breakers locally.
- The RO is attempting to establish RCS boration. Flow has NOT been verified.
- Reactor power is stable at 56%.

What are the proper actions by the operating crew in response to this event?

Continue attempts to emergency borate the RCS…

A. and immediately transition to SO23-13-11, Emergency Boration of the RCS / Inadvertent Dilution or Boration.

B. and immediately transition to SO23-12-9, Functional Recovery.

C. and complete the Standard Post Trip Actions then diagnose a Reactor Trip Recovery event.

D. and complete the Standard Post Trip Actions then diagnose a Functional Recovery entry.

Question 077

Given the following:

- Unit 2 is at 100% power.
- RCP 2P-003 must be removed from service due to Controlled Bleedoff leakage into Containment of approximately 6 GPM.

Which ONE (1) of the following describes the procedure flowpath that will be required to remove 2P-003 RCP and what will be the RCS flow in the affected loops Steam Generator when the RCP is tripped?

A. Trip the Reactor and enter SO23-12-1, SPTAs; Flow through the affected Steam Generator is reduced by approximately half.

B. Initiate a controlled plant shutdown in accordance with SO23-5-1.7, Power Operation; Flow through the affected Steam Generator is reduced by approximately half.

C. Trip the Reactor and enter SO23-12-1, SPTAs; Flow through the affected Steam Generator is reversed.

D. Initiate a controlled plant shutdown in accordance with SO23-5-1.7, Power Operation; Flow through the affected Steam Generator is reversed.

Question 078

Given the following conditions:

- Unit 3 is at 100% power.
- PT-0100X, Pressurizer Control Channel X is the controlling PZR pressure channel.
- The following alarms are received:
    - 50A04, PZR PRESSURE DEVIATION HI/LO
    - 50A14, PZR PRESSURE HI/LO
- PT-0100X indicates 2200 psia and trending down.
- PT-0100Y indicates 2285 psia and trending up.

Which ONE (1) of the following describes the procedure required to mitigate the event, and the Technical Specification action required, if any?

A. Enter SO23-13-27, Pressurizer Pressure and Level Malfunction.
Technical Specification ACTION is not currently required.

B. Enter SO23-13-27, Pressurizer Pressure and Level Malfunction.
Restore Pressurizer pressure within 2 hours.

C. Enter SO23-3-1.10, Pressurizer Pressure and Level Control, Attachment for Foxboro Alarm Response and Foxboro Controller Page Data.
Technical Specification ACTION is not currently required.

D. Enter SO23-3-1.10, Pressurizer Pressure and Level Control, Attachment for Foxboro Alarm Response and Foxboro Controller Page Data.
Restore Pressurizer pressure within 2 hours.

Question 079

The following conditions exist on Unit 2 after a seismic event:

- Steam Generator E-088 wide range level is 75% and rising with all feedwater secured.
- Steam Generator E-089 wide range level is 80% and rising with all feedwater secured.
- SG E-088 Main Steam Line Radiation monitor is in alarm and rising.
- SG E-089 Main Steam Line Radiation monitor is in alarm and rising.
- SIAS/CCAS/CRIS/CIAS/MSIS have actuated.
- Both Steam Generators are available for cooldown.

Which ONE (1) of the following actions is required and what will the crew implement to mitigate the event in progress?

A. Commence a cooldown using SG E-088.
Isolate the SG with the highest activity when Thot is less than 530ºF.

B. Commence a cooldown using SG E-088.
Isolate the SG with the highest level when Thot is less than 530ºF.

C. Commence a cooldown using SG E-088 and E-089.
Isolate the SG with the highest activity when Thot is less than 530ºF.

D. Commence a cooldown using SG E-088 and E-089.
Isolate the SG with the highest level when Thot is less than 530ºF.

Question 080

Given the following conditions:

- Unit 2 is at 100% power.
- Pressurizer Pressure and Level Control are both selected to Channel X.
- Annunciator 63A32 - 2D1 125 VDC BUS TROUBLE alarms in the Control Room.
- DC Bus 2D1 indicates 118 VDC.
- The dispatched PEO has NOT reported conditions in the 2D1 Battery Charger Room.

Given the information provided, which ONE (1) of the following is the impact on plant operations and what are the procedural implications?

A. Unit 3 RCP 3P-001 cannot be tripped from the Control Room. Refer to SO23-3-1.7, Reactor Coolant Pump Operation to transfer control power from Unit 2 to Unit 3.

B. Bus 2D1 is grounded. Refer to SO23-6-33, Ground Isolation to isolate the ground.

C. Pressurizer pressure and level rise. Stop Charging Pumps and heaters to control Pressurizer level and pressure per SO23-13-27, Pressurizer Pressure and Level Malfunction.

D. DC Control power to Bus 2A04 is degraded. Refer to SO23-6-15, Operation of 125 VDC Systems to initiate maintenance and place the battery on an equalizing charge if appropriate.

Question 081

Given the following conditions:

- Unit 2 has tripped following a Bus 2A07 overcurrent trip and loss of vacuum.
- Auxiliary Feedwater Pump P-141 breaker will not close and P-504 was cleared for Boundary of the Week.
- Auxiliary Feedwater Pump P-140 is running but cannot develop sufficient discharge head.
- The CRS has completed SO23-12-1, Standard Post Trip Actions and has transitioned to SO23-12-6, Loss of Feedwater.

Which ONE (1) of the following actions is required?

A. Open Atmospheric Dump Valves to lower SG pressure to P-140 discharge pressure.
Transition to SO23-12-9, Functional Recovery, Attachment FR-5, Recovery - Heat Removal success path HR-1.

B. Transition to Step 10, Establish Condensate Pump flow to Available SGs.
Initiate SIAS and CCAS.
Align a Condensate Pump and depressurize the Steam Generators to 500 psig.

C. Initiate SIAS and CCAS.
Transition to Step 10, Establish Condensate Pump flow to Available SGs.
Open Atmospheric Dump Valves to lower SG pressure to P-140 discharge pressure.

D. Transition to SO23-12-9, Functional Recovery, Attachment FR-5, Recovery - Heat Removal success path HR-1.
Align a Condensate Pump and depressurize the Steam Generators to 500 psig.

Question 082

Given the following:

- Unit 2 is in MODE 6.
- Refueling activities are in progress.
- Chemistry sample indicates Refueling Cavity boron concentration is below the Technical Specification limit.

Which ONE (1) of the following describes the action required, assuming all equipment operates as required?

A. Initiate boration at greater than 80 GPM using SO23-3-2.2, Makeup Operations. Boration flow may be verified by BAMU tank level trend.

B. Initiate boration at greater than 40 GPM using SO23-3-2.2, Makeup Operations. Boration flow may be verified by RWST level trend.

C. Initiate boration at greater than 80 GPM using SO23-13-11, Emergency Boration of the RCS/Inadvertent Dilution or Boration. Boration flow may be verified by RWST level trend.

D. Initiate boration at greater than 40 GPM using SO23-13-11, Emergency Boration of the RCS/Inadvertent Dilution or Boration. Boration flow may be verified by BAMU Tank level trend.

Question 083

Given the following:

- Unit 2 is at 100% power with all CEAs fully withdrawn.
- A Group 6 CEA drops into the core.

Which ONE (1) of the following is the Technical Specification ACTION?

Reduce power level to _____ within _____ hour(s).

A. 90% one (1)

B. 98% one (1)

C. 90% two (2)

D. 95% two (2)

Question 084

During a refueling outage with fuel movement in progress, which ONE (1) of the following would be considered a loss of Containment Closure?

A. Containment equipment hatch held in place by 4 equally spaced bolts.

B. Both Containment Personnel Airlock doors simultaneously open.

C. Containment Purge valves are open with a Purge in progress.

D. SG Secondary side manways off and a Main Steam Safety Valve is removed.

Question 085

Given the following:

- Unit 2 was operating at 100% power when a complete loss of Component Cooling Water occurred.
- The crew has performed all actions required by SO23-13-7, Loss of CCW/SWC.
- The Standard Post Trip Actions have been completed.

Which ONE (1) of the following describes the procedure transition from SPTAs and the procedure and strategy required for a plant cooldown?

A. SO23-12-2, Reactor Trip Recovery.
Cooldown will be performed using SO23-5-1.4, Plant Shutdown to Hot Standby.

B. SO23-12-2, Reactor Trip Recovery.
Cooldown will be performed using SO23-12-11, Attachment 3, Cooldown / Depressurization.

C. SO23-12-7, Loss of Off-Site Power/Loss of Forced Circulation.
Cooldown will be performed using SO23-12-11, Attachment 3, Cooldown / Depressurization. Minimizing Reactor vessel upper head voids takes priority over RCS P/T limits during the cooldown.

D. SO23-12-7, Loss of Off-Site Power/Loss of Forced Circulation.
Cooldown will be performed using SO23-12-11, Attachment 3, Cooldown / Depressurization. RCS P/T limits take priority over minimizing Reactor vessel head voids during the cooldown.

Question 086

Given the following:

- Unit 2 is at 100% power.
- Pressurizer level control is selected to Channel X.
- Pressurizer level is slowly lowering.
- Letdown flow is slowly lowering, and currently indicates approximately 32 GPM.
- VCT automatic makeup is in progress.

Which ONE (1) of the following describes the event in progress, and the next action required?

A. RCS Leak; Enter SO23-13-14, RCS Leak and start additional Charging Pumps.

B. RCS Leak; Enter SO23-13-14, RCS Leak and isolate Letdown.

C. PZR Level Control System Malfunction; Enter SO23-13-27, Pressurizer Pressure and Level Malfunction and switch control to Channel Y.

D. PZR Level Control System Malfunction; Enter SO23-13-27, Pressurizer Pressure and Level Malfunction and place LIC-0110, PZR Level Controller in MANUAL.

Question 087

Given the following:

- Unit 3 is in MODE 5.
- Both Train A and B Fuel Handling Isolation System (FHIS) Radiation Monitors (RE-7822 & 7823) are OPERABLE.
- Train A Emergency Diesel Generator is in Maintenance Lockout.
- Train A and B Fuel Handling Building Post-Accident Cleanup Units (PACU) are available.
- Fuel Handling Building Normal Ventilation is currently in service.
- Train B CREACUS is in service.

Refueling Engineers have requested they be allowed to shuffle irradiated fuel and install a new rack (1500 lbs.) in the Spent Fuel Pool.

Which ONE (1) of the following describes when these operations should be allowed?

Spent Fuel Pool operations...

A. may begin as long as the Train B PACU Unit remains OPERABLE.

B. may NOT begin until the INOPERABLE Train A PACU Unit has been returned to OPERABLE status.

C. may begin as long as the Train B PACU Unit remains OPERABLE and is placed in service in the ISOLATE mode.

D. may NOT begin until the Train A PACU Unit has been placed in service in the ISOLATE mode.

Question 088

Given the following conditions:

- Unit 2 has tripped after a LOCA and loss of Offsite Power.
- SIAS has actuated and all equipment is operating as designed.
- The crew is performing the actions of SO23-12-3, Loss of Coolant Accident.
- While evaluating FS-7, Verify SI Throttle/Stop Criteria, the following parameters are observed:
  - SG pressures are 1000 psia.
  - SG narrow range levels are approximately 22% and trending upwards.
  - Pressurizer Level is 65% and slowly rising.
  - Core Exit Saturation Margin is 9ºF.
  - Reactor Vessel Level is 100% Plenum.
  - Containment pressure is 1.2 psig and rising SLOWLY.

Which ONE (1) of the following describes the action required?

A. Initiate FS-32, Monitor RCS Solid Operation, and FS-30, Establish CVCS Letdown.

B. Secure one train of HPSI to limit the rise in Pressurizer level to avoid a Pressurized Thermal Shock transient.

C. Throttle or stop HPSI one train at a time per FS-7, Verify SI Throttle / Stop Criteria.

D. Maintain current conditions until all of the criteria are met per FS-7, Verify SI Throttle / Stop Criteria.

Question 089

Given the following conditions:

- Unit 2 is in MODE 5 preparing to enter MODE 6.
- Train A is the Protected Train.
- Train B 125 VDC Bus D2 out-of-service for battery replacement.
- 125 VDC Bus D1 sustains a fault and is de-energized.

Which ONE (1) of the following describes the reason that Technical Specifications prevents entry into MODE 6?

A. The failure of DC Bus D1 also makes 120 VAC Bus Y-003 INOPERABLE.

B. Failure of protected train DC power raises the Shutdown Risk level to an unacceptable RED status.

C. The plant no longer meets the initial conditions assumed in the safety analysis of a redundant set of AC and DC power sources OPERABLE during an assumed loss of offsite AC power and single failure of one other AC source.

D. There is insufficient instrumentation and control power available to recover from a Fuel Handling Accident.

Question 090

Given the following:

- A Station Blackout has occurred.
- The crew is performing SO23-12-8, Blackout.
- SO23-12-11, Attachment 8, Restoration of Off-Site Power, is in progress.
- While performing Attachment 8, the following alarm is identified:
    - 63C21 - RES XFMR XR2 PROTECTION TRIP

Which ONE (1) of the following actions is appropriate for this condition?

A. Verify the System Separation Alarm is reset, then reset 63C21 and continue in Attachment 8.

B. Initiate SO23-6-6, Reserve Auxiliary Transformer Operation; continue actions for Emergency Faulted Reserve Auxiliary Transformer Operations.

C. Initiate SO23-6-6, Reserve Auxiliary Transformer Operation, and remove Generator Iso-Phase Bus disconnects to allow use of the Main Transformers.

D. Stop performance of Attachment 8, initiate repairs to XR2, and continue attempting restoration of EDGs in accordance with SO23-12-8, Station Blackout.

Question 091

Given the following conditions:

- A Waste Gas release is in progress on T-085, Waste Gas Decay Tank.
- 2/3 FV-7202 is open and releasing at 30 SCFM.
- Continuous Exhaust Fans A-311 and A-312 are in service.
- Radiation Monitor 2/3RT-7808G is aligned to the Continuous Exhaust Plenum.
- Radiation Monitor 3RT-7865-1 is aligned to the Unit 3 Containment Purge Stack. The purge was completed last shift.

During the release the following occurs:

- Radiation Monitor 2/3RT-7808G has failed high.
- Continuous Exhaust Fan A-311 trips on overcurrent.
- 2/3 FV-7202, Waste Gas Decay Tank Header Vent Valve has closed.

Which ONE (1) of the following:

a.) Identifies the cause of the closure of 2/3 FV-7202, Waste Gas Decay Tank Header Vent Valve?

b.) Identifies the action(s) required to continue the release?

A. a.) Tripping of Continuous Exhaust Fan A-311.
b.) Ensure 2RT-7865-1 is aligned to the Plant Vent Stack per SO23-8-14, Radwaste Gas Collection System Operation.

B. a.) Radiation Monitor 2/3RT-7808G failing high.
b.) Ensure 2RT-7865-1 is aligned to the Plant Vent Stack per SO23-8-14, Radwaste Gas Collection System Operation.

C. a.) Tripping of Continuous Exhaust Fan A-311.
b.) Bypass 2/3RT-7808G and align 3RT-7865-1 to the Plant Vent Stack to monitor the release per SO23-8-15, Radwaste Gas Discharge.

D. a.) Radiation Monitor 2/3RT-7808G failing high.
b.) Bypass 2/3RT-7808G and align 3RT-7865-1 to the Plant Vent Stack to monitor the release per SO23-8-15, Radwaste Gas Discharge.

Question 092

Given the following conditions:

- The Unit was at 100% power when a failure of the Steam Bypass Control System (SBCS) caused the SBCS Valves to open.
- RCS temperature decreased to 528ºF.
- RCS pressure decreased to 2020 psig.
- Pressurizer level decreased to 15%.
- The Reactor was automatically tripped.
- SBCS was isolated during the performance of SPTAs.

Which ONE (1) of the following describes the earliest report required to the NRC?

A. 1 hour

B. 4 hours

C. 8 hours

D. 24 hours

Question 093

Given the following conditions:

- Unit 3 is at 100% power.
- All four Circulating Water Pumps are operating.
- Full Flow Condensate Polishing Demineralizers (FFCPD) are in service.
- The following Annunciators are in alarm:
  - 52A32 - CONDENSATE CATION CONDUCTIVITY HIGH
  - 52A34 - FEEDWATER CATION CONDUCTIVITY HI
  - 52A42 - CONDENSER NE HOTWELL CONDUCTIVITY HI
- Chemistry reports Condensate Cation Conductivity > 10 µS/cm.
- LV-3245, Condensate Drawoff Valve was placed in DISABLE.

Which ONE (1) of the following responses and associated procedure should be performed?

A. Perform a Rapid Power Reduction per SO23-5-1.7, Power Operations to preserve Main Feedwater Pump NPSH while overboarding.
Secure NE Condenser Circulating Water Pump after the power reduction to comply with NPDES limits.

B. Initiate a Reactor and Turbine trip then refer to SO23-12-1, Standard Post Trip Actions to preserve the Full Flow Condensate Polishing Demineralizer.
Stop the NE Condenser Circulating Water Pump to minimize introduction of contaminants.

C. Secure the NE Condenser Circulating Water Pump to comply with NPDES limits.
Initiate a Reactor and Turbine trip then refer to SO23-12-1, Standard Post Trip Actions to minimize chloride buildup in the Steam Generators.

D. Secure the NE Condenser Circulating Water Pump to minimize introduction of contaminants.
Perform a Rapid Power Reduction per SO23-5-1.7, Power Operations to preserve Main Feedwater Pump NPSH while overboarding.

Question 094

Given the following plant conditions:

- Unit 2 is currently in MODE 3.
- At 1200 today, it is discovered that a Technical Specification required routine 24 hour surveillance was last performed at 0500 on the previous day.

Which ONE (1) of the following is the LATEST time the surveillance may be completed in accordance with Technical Specification requirements prior to declaring the associated equipment INOPERABLE?

A. 1300 today

B. 1800 today

C. 0500 tomorrow

D. 1200 tomorrow

Question 095

In accordance with SO123-0-A4, Configuration Control, when is a 10CFR50.59 Safety Evaluation required?

A. In support of Maintenance activities any time equipment is placed in an alternate alignment and must be documented on a Status Control Form.

B. In support of Maintenance activities when an alternate alignment will be in place for greater than or equal to 90 days.

C. When alternate alignments are directed by plant procedures with the exception of Annunciator Response Procedures and the equipment will remain in the off-normal position upon completion of the procedure.

D. When alternate alignments are directed by any plant procedures and the equipment will remain in the off-normal position upon completion of the procedure.

Question 096

Given the following:

- Unit 2 is in MODE 5.
- Reduced Inventory operations are in progress.
- Work is being planned on equipment that MAY affect Shutdown Cooling System operation.

Which ONE (1) of the following describes the restriction on performance of this work in accordance with SO123-XX-5, Work Authorizations?

A. The effect must be annotated in the Capability Limitation section of the WAR; The WAR must be approved by the Manager, Plant Operations or his designee.

B. The effect must be annotated in the Capability Limitation section of the WAR; The WAR must be approved by the Control Room Supervisor.

C. This work is NOT allowed while Reduced Inventory Operations are in progress.

D. This work is NOT allowed while Reduced Inventory Operations are in progress UNLESS a 10CFR50.59 Safety Evaluation is completed and approved.

Question 097

Given the following conditions:

- A Gaseous Waste release is planned.
- Wind direction is blowing from the east.

Which ONE (1) of the following describes the status of the planned release in accordance with SO23-8-15, Gaseous Effluent Release?

The release…

A. CANNOT be initiated until wind direction changes.

B. may be initiated **ONLY IF** wind speed is below the minimum required by a calculation.

C. may be initiated **ONLY IF** wind speed is above the minimum required by a calculation.

D. is DESIRABLE and may commence without restriction.

Question 098

Which ONE (1) of the following states the Emergency Exposure Guideline (EPA-400) limit for Protecting Valuable Property at SONGS?

A. 5 REM TEDE.

B. 10 REM TEDE.

C. 25 REM TEDE.

D. 50 REM TEDE.

Question 099

Given the following conditions:

- A declared emergency has been in progress for 35 minutes.
- An Alert has been declared.
- The Emergency Coordinator determines there is a need to reclassify the event as a Site Area Emergency.

Which ONE (1) of the following states the effect this change in the event classification will have on NOTIFICATIONS made to offsite agencies?

Changing the event classification requires...

A. performing Emergency Recall activation.

B. a four (4) hour notification to the NRC.

C. a new set of notifications.

D. a new set of notifications if any Protective Action Recommendations are also changed.

Question 100

Given the following:

Time	Event
0803	RCS leakage requires entry to AOI.
0807	Leakage quantified to be 36 GPM.
0818	Reactor Trip due to excessive RCS leakage.
0819	SIAS actuated.
0821	Alert declared.
0823	Site Area Emergency declared.

Which ONE (1) of the following describes the LATEST time that you must notify the state and NRC?

	State	NRC
A.	0822	0822
B.	0822	0907
C.	0836	0836
D.	0836	0921