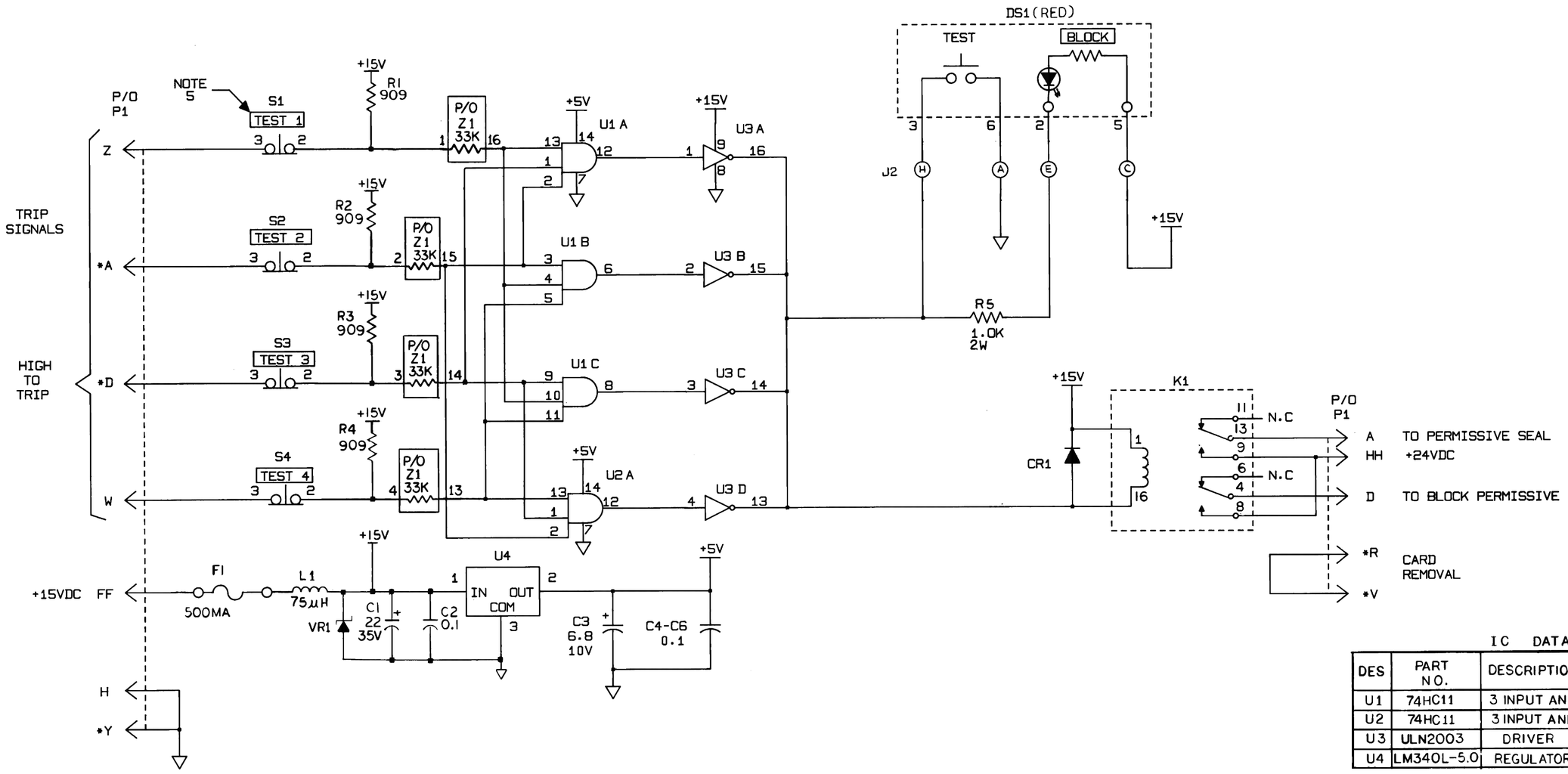

IC DATA

DES	PART NO.	DESCRIPTION	POWER PINS GND	POWER PINS VCC
U1	74HC11	3 INPUT AND	7	14
U2	74HC11	3 INPUT AND	7	14
U3	ULN2003	DRIVER	8	9
U4	LM340L-5.0	REGULATOR	3	—

SPARES

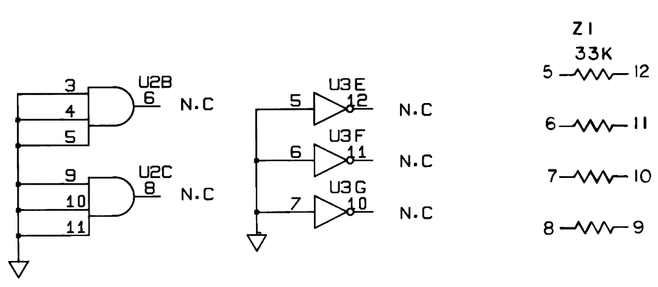

SCHEMATIC NOTES

1. UNLESS OTHERWISE SPECIFIED
   A.) CAPACITORS ARE IN MICROFARADS, ± 10%, 50V.
   B.) RESISTORS ARE IN OHMS, ± 1%, 1.5 W.
   C.) ALL DIODES ARE 1N4002.
2. LAST REFERENCE DESIGNATION USED : S4, P1, J2, K1, CR1, Z1, C6, U4, R5, L1, VR1
3. REFERENCE DESIGNATION NOT USED:
4. ALL CONNECTORS WITH A (*) INDICATE LOWER CASE CHARACTERS.
5. BLOCKED IN TITLES ARE SILKSCREENED ON FRONT PANEL.
6. FOR 3 OF 4 BLOCK MODULE TEST SET SEE DRAWING 39256 SH. 402

EATON DWG. NO. S6N640 SH. 1 OF 1
REDRAWN FROM SAME NNECO DWG. NO. REV. 1
CAD
NOTE: MANUAL REVISIONS TO THIS DOCUMENT WHEN AS-BUILT ARE PROHIBITED.

Q.A.

REVISIONS DURING CONSTRUCTION	P.A. NO.

P.A.*	NO.	DATE	REVISIONS	BY	CHK.	APP.	APP.
	2	1-14-99	INCORP. DCN DM2-00-0944-98	JMM	WBZ	JPP	JPP

Northeast Utilities System
FOR NORTHEAST NUCLEAR ENERGY CO.
TITLE
MILLSTONE UNIT 2
SCHEMATIC 3 OF 4 BLOCK MATRIX
WATERFORD, CT.

BY JMM/JSJ	CHKD.	APP.	APP.
DATE 12/10/98	DATE	DATE	DATE
SCALE N/A	DWG. NO. 25203-39256 SH. 58		
P.A.* N/A			