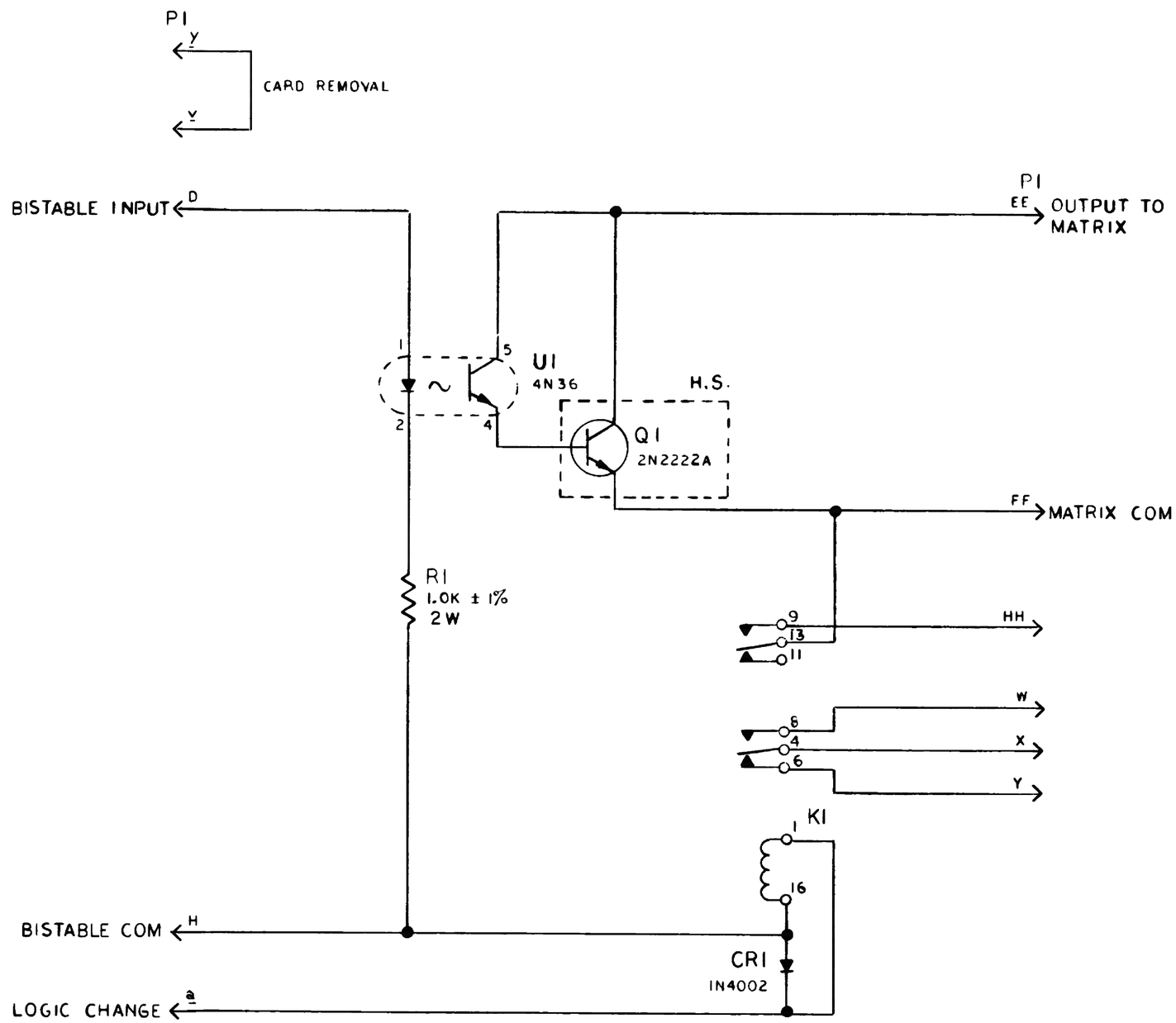

NOTE:
1. FOR ISOLATION MODULE TEST SET SEE DRAWING 39256 SH. 399

EATON DWG. NO.
S6N637 SH. 1 OF 1

REDRAWN FROM SAME
NNECO DWG. NO. REV. 1

CAD
NOTE:
MANUAL REVISIONS TO THIS DOCUMENT WHEN AS-BUILT ARE PROHIBITED.

Q.A.

REVISIONS DURING CONSTRUCTION

NO.	DATE	REVISIONS	BY	CHK	APP	APP
2	1-14-99	INCORP. DCN DM2-00-0944-98	JMM	WBZ	JPP	JPP

Dominion
Dominion Nuclear Connecticut, Inc.
Millstone Power Station

TITLE
MILLSTONE UNIT 2
SCHEMATIC ISOLATION MODULE
WATERFORD, CT.

BY JMM/WBZ | CHKD. | APP. | APP.
DATE 12/9/98 | DATE | DATE | DATE
SCALE N/A | DWG. NO. 25203-39256 SH. 32

S:\MILLSTONE\4\DATA1\MPCAD\mpdesign\Users\scott84\DGN\MP\25203\CONTROL\30000\C3925632.HYB
08/21/2007