GE-Hitachi Nuclear Energy

26A6642AX
Revision 4
September 2007

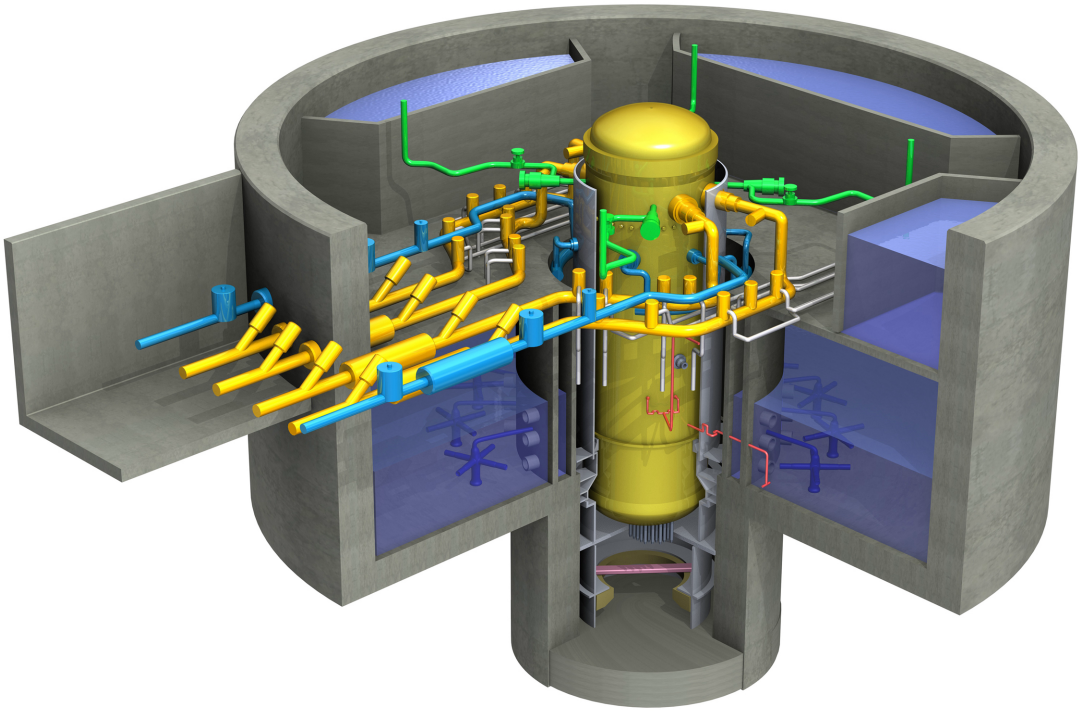

ESBWR Design Control Document
Tier 2

Chapter 8
Electric Power

Contents

8. Electric Power 8.1-1
8.1 Introduction 8.1-1
8.1.1 General 8.1-1
8.1.2 Utility Power Grid and Offsite Power System Descriptions 8.1-1
8.1.2.1 Utility Power Grid Description 8.1-1
8.1.2.2 Offsite Power System Description 8.1-1
8.1.3 Onsite Electric Power System 8.1-2
Onsite AC Power System 8.1-2
8.1.3.2 Onsite DC Power System 8.1-2
8.1.4 Safety-Related Loads 8.1-3
8.1.5 Design Basis 8.1-3
8.1.5.1 Offsite Power 8.1-3
8.1.5.2 Onsite Power 8.1-4
8.1.6 Compliance to Regulatory Requirements and Guidelines 8.1-9
8.1.7 COL Information 8.1-9
8.1.8 References 8.1-9
8.2 Offsite Power Systems 8.2-1
8.2.1 Description 8.2-1
8.2.1.1 Transmission System 8.2-1
8.2.1.2 Offsite Power System 8.2-1
8.2.2 Analysis 8.2-2
8.2.2.1 Reliability and Stability Analysis 8.2-2
8.2.2.2 Regulatory Analysis 8.2-2
8.2.3 Design Bases Requirements 8.2-3
8.2.4 COL Information 8.2-4
8.2.4-1-A Transmission System Description 8.2-4
8.2.4-2-A Switchyard Description 8.2-4
8.2.4-3-A Normal Preferred Power 8.2-4
8.2.4-4-A Alternate Preferred Power 8.2-4
8.2.4-5-A Protective Relaying 8.2-4
8.2.4-6-A Switchyard DC Power 8.2-4
8.2.4-7-A Switchyard AC Power 8.2-4
8.2.4-8-A Switchyard Transformer Protection 8.2-4
8.2.4-9-A Stability and Reliability of the Offsite Transmission Power Systems 8.2-5
8.2.4-10-A Interface Requirements 8.2-5
8.2.5 References 8.2-5
8.3 Onsite Power Systems 8.3-1
8.3.1 AC Power Systems 8.3-1
8.3.1.1 Description 8.3-1
8.3.1.2 Analysis 8.3-12
8.3.1.3 Physical Identification of Safety-Related Equipment 8.3-14
8.3.1.4 Independence of Redundant Systems 8.3-15
8.3.2 DC Power Systems 8.3-21

8.3.2.1 Description 8.3-21
8.3.2.2 Analysis 8.3-25
8.3.3 Fire Protection of Cable Systems 8.3-27
8.3.3.1 Resistance of Cables to Combustion 8.3-27
8.3.3.2 Cables and Raceways 8.3-28
8.3.3.3 Localization of Fires 8.3-28
8.3.4 COL Information 8.3-29
8.3.5 References 8.3-29
Appendix 8A Miscellaneous Electrical Systems 8A-1
8A.1 Station Grounding and Surge Protection 8A-1
8A.1.1 Description 8A-1
8A.1.2 Analysis 8A-2
8A.2 Cathodic Protection 8A-3
8A.2.1 Description 8A-3
8A.2.2 Analysis 8A-3
8A.2.3 COL Information 8A-3
8A.2.3-1-A Cathodic Protection System 8A-3
8A.3 Electric Heat Tracing 8A-3
8A.3.1 Description 8A-3
8A.3.2 Analysis 8A-3
8A.4 References 8A-3

List of Tables

Table 8.1-1 Onsite Power System SRP Criteria Applicability Matrix 8.1-10
Table 8.3-1 Diesel-Generator Alarms 8.3-32
Table 8.3-2 Battery Cycle Times 8.3-33

List of Illustrations

Figure 8.1-1. Electrical Power Distribution System 8.1-12
Figure 8.1-2. Direct Current Power Supply (Nonsafety-Related) 8.1-15
Figure 8.1-3. Direct Current Power Supply (Safety-Related) 8.1-17
Figure 8.1-4. Uninterruptible AC Power Supply (Safety-Related) 8.1-18
Figure 8.1-5. Uninterruptible AC Power Supply (Nonsafety-Related) 8.1-19
Figure 8.1-6. Instrumentation and Control Power Supply System (Nonsafety-Related) 8.1-21
Figure 8.3-1. Safety-Related 480 Volt Power Centers 8.3-34
Figure 8.3-2. Nonsafety-Related 480 Volt Power Centers 8.3-35

Abbreviations And Acronyms List

Term	Definition
10 CFR	Title 10, Code of Federal Regulations
ac / AC	Alternating Current
AEC	Atomic Energy Commission
AHS	Auxiliary Heat Sink
ALARA	As Low As Reasonably Achievable
ALWR	Advanced Light Water Reactor
ANS	American Nuclear Society
ANSI	American National Standards Institute
AOO	Anticipated Operational Occurrence
AOV	Air Operated Valve
APRM	Average Power Range Monitor
ARI	Alternate Rod Insertion
ASA	American Standards Association
ASD	Adjustable Speed Drive
ASME	American Society of Mechanical Engineers
ASTM	American Society of Testing Methods
ATWS	Anticipated Transients Without Scram
BHP	Brake Horse Power
BOP	Balance of Plant
BRE	Battery Room Exhaust
BTP	NRC Branch Technical Position
BTU	British Thermal Unit
BWR	Boiling Water Reactor
C&I	Control and Instrumentation
CDF	Core Damage Frequency
CFR	Code of Federal Regulations
CIS	Containment Inerting System
COL	Combined Operating License
CPU	Central Processing Unit
CR	Control Rod
CRD	Control Rod Drive
CRHA	Control Room Habitability Area
CT	Main Cooling Tower
CWS	Chilled Water System
DAC	Design Acceptance Criteria
DBA	Design Basis Accident
dc / DC	Direct Current
DCIS	Distributed Control and Information System

Abbreviations And Acronyms List

Term	Definition
DG	Diesel-Generator
DHR	Decay Heat Removal
DM&C	Digital Measurement and Control
DW	Drywell
EB	Electrical Building
EBAS	Emergency Breathing Air System
EBHV	Electrical Building HVAC
ECCS	Emergency Core Cooling System
EFU	Emergency Filter Unit
ENS	Emergency Notification System
EOC	Emergency Operations Center
EOF	Emergency Operations Facility
EOP	Emergency Operating Procedures
EPDS	Electric Power Distribution System
EPRI	Electric Power Research Institute
EQ	Environmental Qualification
ESF	Engineered Safety Feature
ETS	Emergency Trip System
FAPCS	Fuel and Auxiliary Pools Cooling System
FHA	Fire Hazards Analysis
FMCRD	Fine Motion Control Rod Drive
FMEA	Failure Modes and Effects Analysis
FPS	Fire Protection System
FO	Diesel Fuel Oil Storage Tank
FPE	Fire Pump Enclosure
FTS	Fuel Transfer System
FW	Feedwater
FWCS	Feedwater Control System
FWS	Fire Water Storage Tank
GCS	Generator Cooling System
GDC	General Design Criteria
GDCS	Gravity-Driven Cooling System
GE	General Electric Company
GE-NE	GE Nuclear Energy
GEN	Main Generator System
GL	Generic Letter
HCU	Hydraulic Control Unit
HELB	High Energy Line Break
HEPA	High Efficiency Particulate Air/Absolute

Abbreviations And Acronyms List

Term	Definition
HFE	Human Factors Engineering
HSI	Human-System Interface
HVAC	Heating, Ventilation and Air Conditioning
I&C	Instrumentation and Control
I/O	Input/Output
IAS	Instrument Air System
IBC	International Building Code
IC	Isolation Condenser
ICS	Isolation Condenser System
IED	Instrument and Electrical Diagram
IEEE	Institute of Electrical and Electronic Engineers
IMC	Induction Motor Controller
IMCC	Induction Motor Controller Cabinet
ISA	Instrument Society of America
ISO	International Standards Organization
ITAAC	Inspections, Tests, Analyses and Acceptance Criteria
LAPP	Loss of Alternate Preferred Power
LCO	Limiting Conditions for Operation
LD	Logic Diagram
LFCV	Low Flow Control Valve
LOCA	Loss-of-Coolant-Accident
LOFW	Loss-of-Feedwater
LOOP	Loss of Offsite Power
LOPP	Loss of Preferred Power
LPCRD	Locking Piston Control Rod Drive
LPRM	Local Power Range Monitor
MCC	Motor Control Center
MCPR	Minimum Critical Power Ratio
MCR	Main Control Room
MCRP	Main Control Room Panel
MELB	Moderate Energy Line Break
MMI	Man-Machine Interface
MMIS	Man-Machine Interface Systems
MOD	Motor Operated Disconnect
MOV	Motor-Operated Valve
MPL	Master Parts List
MS	Main Steam
MSIV	Main Steam Isolation Valve
MSL	Main Steamline

Abbreviations And Acronyms List

Term	Definition
MSLB	Main Steamline Break
MSLBA	Main Steamline Break Accident
MT	Main Transformer
MWS	Makeup Water System
NBS	Nuclear Boiler System
N-DCIS	Nonsafety-Related Distributed Control and Information System
NFPA	National Fire Protection Association
NIST	National Institute of Standard Technology
NICWS	Nuclear Island Chilled Water Subsystem
NMS	Neutron Monitoring System
NOV	Nitrogen Operated Valve
NPSH	Net Positive Suction Head
NRC	Nuclear Regulatory Commission
NSSS	Nuclear Steam Supply System
O&M	Operation and Maintenance
OBE	Operating Basis Earthquake
OOS	Out-of-service
OSHA	Occupational Safety and Health Administration
P&ID	Piping and Instrumentation Diagram
PAM	Post Accident Monitoring
PAS	Plant Automation System
PCC	Passive Containment Cooling
PCCS	Passive Containment Cooling System
PM	Preventive Maintenance
PRA	Probabilistic Risk Assessment
PSWS	Plant Service Water System
PWR	Pressurized Water Reactor
QA	Quality Assurance
Q-DCIS	Safety-Related Distributed Control and Information System
RAM	Reliability, Availability and Maintainability
RAT	Reserve Auxiliary Transformer
RB	Reactor Building
RCCWS	Reactor Component Cooling Water System
RCS	Reactor Coolant System
RFP	Reactor Feed Pump
RG	Regulatory Guide
RHR	Residual heat removal (function)
RMS	Root Mean Square
RMU	Remote Multiplexer Unit

Abbreviations And Acronyms List

Term	Definition
RPS	Reactor Protection System
RPV	Reactor Pressure Vessel
RSS	Remote Shutdown System
RWCU/SDC	Reactor Water Cleanup/Shutdown Cooling
SAR	Safety Analysis Report
S/N	Signal-to-Noise
SAS	Service Air System
SBO	Station Blackout
SCRRI	Selected Control Rod Run-in
SDC	Shutdown Cooling
SDS	System Design Specification
SER	Safety Evaluation Report
SLC	Standby Liquid Control
SLCS	Standby Liquid Control System
SMU	SSLC Multiplexing Unit
SOV	Solenoid Operated Valve
SP	Set Point
SR	Surveillance Requirement
SRM	Source Range Monitor
SRNM	Startup Range Neutron Monitor
SRO	Senior Reactor Operator
SRP	Standard Review Plan
SRV	Safety Relief Valve
SSAR	Standard Safety Analysis Report
SSC(s)	Structure, System and Component(s)
SSE	Safe Shutdown Earthquake
SSLC	Safety System Logic and Control
ST	Spare Transformer
SV	Safety Valve
SY	Switch Yard
TB	Turbine Building
TBS	Turbine Bypass System
TBV	Turbine Bypass Valve
TCCWS	Turbine Component Cooling Water System
TCS	Turbine Control System
TCV	Turbine Control Valve
TG	Turbine Generator
TMI	Three Mile Island
TMSS	Turbine Main Steam System

Abbreviations And Acronyms List

Term	Definition
TS	Technical Specification(s)
TSC	Technical Support Center
UAT	Unit Auxiliary Transformer
UL	Underwriter's Laboratories Inc.
UPS	Uninterruptible Power Supply
USNRC	United States Nuclear Regulatory Commission
UV	Ultraviolet
V&V	Verification and Validation
Vac / VAC	Volts Alternating Current
Vdc / VDC	Volts Direct Current
VDU	Video Display Unit
VRLA	Valve Regulated Lead Acid
XFMR	Transformer

8. ELECTRIC POWER

8.1 INTRODUCTION

8.1.1 General

Power is supplied to the plant from two independent offsite power sources, the "Normal Preferred" power source and the "Alternate Preferred" power source. The loss of both preferred sources may be referred to as a Loss of Preferred Power (LOPP) or a Loss of Offsite Power (LOOP). The terms may be used interchangeably. These power sources are designed to provide reliable power for the plant auxiliary loads, such that any single active failure can affect only one power source and cannot propagate to the alternate power source.

The onsite AC power system consists of safety-related and nonsafety-related power systems. The two offsite power sources provide the normal preferred and alternate preferred AC power to safety-related and nonsafety-related loads. In the event of total loss of offsite power sources and loss of main generator island mode operation (main generator continues to provide AC power to site loads upon loss of offsite power sources), two onsite independent nonsafety-related standby diesel generators are provided to power the Plant Investment Protection (PIP) nonsafety-related loads and safety-related loads through battery chargers, rectifiers, or regulating transformers. There are four independent safety-related DC divisions to provide power for the safety-related loads.

Onsite safety-related and nonsafety-related DC systems supply all the DC power requirements of the plant.

8.1.2 Utility Power Grid and Offsite Power System Descriptions

8.1.2.1 Utility Power Grid Description

The utility power grid description is provided in Subsection 8.2.1.

8.1.2.2 Offsite Power System Description

The offsite power system consists of the set of electrical circuits and associated equipment that are used to interconnect the offsite transmission system with the plant main generator and the onsite electrical power distribution system, as indicated on the one-line diagram, Figure 8.1-1.

The system includes the switchyard and the high voltage tie lines to the high-side Motor Operated Disconnects (MODs) of the main generator circuit breaker, the high-side MODs of the Unit Auxiliary Transformers (UATs), and the high-side MODs of the Reserve Auxiliary Transformers (RATs).

The offsite power system begins at the terminals on the transmission system side of the circuit breakers that connect the switchyard to the offsite transmission systems. It ends at the connection to the input terminals of the MODs of the UATs, RATs, and main generator circuit breaker.

During plant startup, emergency shutdown, or during plant outages, the offsite power system serves to supply power from the offsite transmission system to the plant auxiliary and service loads. Offsite power sources are as follows:

- "Normal Preferred" source through the UATs; and
- "Alternate Preferred" source through the RATs.

During normal operation, the main generator transmits generated power to the offsite transmission system through the main transformers and to the plant auxiliary and service loads through the UATs.

The onsite power distribution system is powered continuously by the normal preferred power source during shutdown and throughout plant startup. When the onsite main generator breaker is tripped, power to the plant continues to be fed from the normal preferred power source to the UATs or directly to the RATs through the alternate preferred power source line.

A detailed description of the offsite power system is provided in Subsection 8.2.1.

8.1.3 Onsite Electric Power System

8.1.3.1 Onsite AC Power System

The onsite AC power system includes the main generator, the main transformers, the main generator circuit breaker and high side MODs, the UAT input MODs and circuit breakers, the RAT input MODs, and the unit and reserve auxiliary transformers, as indicated on Figure 8.1-1.

The onsite power system is divided into two medium voltage power levels of 13.8 kV and 6.9 kV for operational flexibility of the plant nonsafety-related systems. Each UAT feeds one of the 13.8 kV and 6.9 kV power load groups and a RAT backs up each UAT.

The 13.8 kV medium voltage power level supplies power to nonsafety-related power generation loads required primarily for unit operation.

The 6.9 kV medium voltage power level supplies power to PIP A and PIP B (nonsafety-related loads), which, on account of their specific functions, are generally required to remain operational at all times or when the unit is shut down. The 6.9 kV medium voltage power level also supplies power to the safety-related loads through Isolation Power Centers.

Both PIP A and PIP B buses have a standby power supply from separate onsite standby diesel generators, in addition to their normal preferred power supply through the UATs, and their alternate preferred power supply from an independent offsite source through the RATs.

The first medium voltage power level distributes power at 60 Hz and voltage levels of 13.8 kV, 480V, 240/120V and 208/120V.

The second medium voltage power level distributes power at 60 Hz and voltage levels of 6.9 kV, 480V, 240/120V and 208/120V.

A detailed description of the onsite AC power system is provided in Subsection 8.3.1.

8.1.3.2 Onsite DC Power System

The onsite DC power system includes the plant batteries and battery chargers and their DC loads, including the DC/AC inverters and the inverter loads.

The nonsafety-related 125 VDC power system, Figure 8.1-2, provides power for nonsafety-related loads, communications, lighting and other DC loads. The nonsafety-related 250V batteries are provided to supply DC power to the inverters that supply 120 VAC to the

Nonsafety-Related Distributed Control and Information System (N-DCIS) and DC power to the nonsafety-related DC motors. The 125 VDC power and 250 VDC power are normally supplied through nonsafety-related battery chargers from the nonsafety-related PIP buses. In the event that this power supply is lost, power is supplied from the nonsafety-related batteries for two hours.

The safety-related 250 VDC power distribution system, Figure 8.1-3, provides four independent and redundant onsite sources of power for operation of safety-related DC loads including the Safety-Related Distributed Control and Information System (Q-DCIS) . The safety-related 250 VDC power is normally supplied through the safety-related battery chargers from the Isolation Power Centers, which are powered from the PIP buses. In the event that this power supply is lost, DC power is supplied from the safety-related batteries for 72 hours. The system is physically and electrically separated into four divisions.

A detailed description of the onsite DC power system is provided in Subsection 8.3.2.

8.1.4 Safety-Related Loads

The safety-related loads utilize the four divisions of DC power sources for instrumentation or control power, for systems required for safe shutdown. Multiple divisions of DC power are involved in performing a single safety-related function and ensure that only two divisions of DC power are required for safe shutdown during a DBA. The control and instrumentation systems required for safe shutdown are identified in Section 7.4, which indicate the four separate divisions of power to each system required for safe shutdown, as shown in Figure 8.1-4.

8.1.5 Design Basis

8.1.5.1 Offsite Power

The offsite power system is described in Subsection 8.2.1.

Electric power from the utility grid to the offsite power system is provided by transmission lines designed and located to minimize the likelihood of failure while ensuring grid reliability. The transmission system serves the main offsite power circuit (Normal Preferred Power), and the reserve offsite power circuit (Alternate Preferred Power) through the site switchyard(s).

The switchyard is designed to minimize the likelihood of simultaneous failure of both the normal and alternate preferred power sources.

A single tie line connects the plant main generator circuit breaker MOD and UAT MODs to the switchyard and constitutes the plant's normal preferred offsite power circuit.

A second offsite (alternate preferred) power circuit is connected to the MODs at the high side of the RATs. This power circuit is electrically independent and physically separate from the normal preferred power circuit to minimize the likelihood of simultaneous failure.

The offsite power system is designed to provide a continuous source of power to the onsite power system throughout plant startup, normal operation (including shutdown), and abnormal operations.

8.1.5.2 Onsite Power

8.1.5.2.1 General

The main generator circuit breaker is designed to withstand the maximum RMS and crest currents, and to interrupt the maximum asymmetrical and symmetrical currents determined to be produced by a three phase bolted fault at its location.

Three single-phase main step-up transformers are provided as part of the onsite power with an additional installed single phase spare. The installation of the spare transformer permits its connection and energization within 24 hours.

The two UATs are provided to supply power to the plant's auxiliary distribution system. The transformers are equal in size, and each has the capacity required to supply power to their load group of safety-related and nonsafety-related systems under conditions of maximum expected concurrent loads, including all required design margins. UATs supply power to their load group through the main transformer from the main generator during normal plant operation and during island mode operation. When the unit is offline, UATs supply power to their load groups from the normal preferred power supply.

Two RATs serve as backup to the UATs. RATs are provided to supply power to the plant's auxiliary distribution system. The transformers are equal in size, and each has the capacity required to supply power to its load group of safety-related and nonsafety-related systems under conditions of maximum expected concurrent loads, including all required design margins. The RATs supply power to their load groups from the alternate preferred power circuit. The RATs are designed to accept the UAT loads through the auto transfer of incoming circuit breakers at the 13.8 kV and 6.9 kV switchgear.

The onsite nonsafety-related power distribution system is divided into two power load groups; each group is fed from separate unit and reserve auxiliary transformers. Redundant loads associated with unit operation are powered from buses of separate power load groups.

Two dedicated buses are provided to feed PIP loads. The dedicated buses have three power supplies:

(1) The normal preferred power supply is provided by a UAT connected to the main generator through the main transformer and to the normal preferred offsite power circuit.

(2) The alternate preferred power supply is provided by a RAT connected to an independent offsite source.

(3) The standby power supply is provided by two independent nonsafety-related standby diesel generators of sufficient capacity such that, in the event of a loss of preferred power, each can supply enough power to achieve cold shutdown.

The safety-related loads are powered by four physically separate and electrically independent divisions. Any two out of four divisions can safely shut down the unit and maintain it in a safe shutdown condition.

Each division is fed by a separate 480 VAC Isolation Power Center, which is powered from a PIP nonsafety-related power supply. The nonsafety-related system ends and the safety-related system begins at the input terminals of the normal and alternate main circuit breakers of the Isolation Power Centers. The input power voltage and frequency is monitored and the input

breaker tripped if either voltage or frequency is out of the specified limits for a predetermined time. The powering of the Isolation Power Centers with a nonsafety-related power supply does not jeopardize plant safety, since safety-related batteries supply the required power during loss of AC power. The Isolation Power Centers are provided with electrical protection through isolation breakers as shown on Figure 8.1-1. The battery chargers and AC Power supplied through rectifiers prevent degradation of the safety-related DC power system by the nonsafety-related AC power system through their output diodes as shown in Figure 8.1-3.

The redundant safety-related electrical divisions (Divisions 1, 2, 3 and 4) are provided with separate onsite DC power supplies, electric buses, distribution cables, controls, relays and other redundant electrical devices. Redundant divisions are physically separate and electrically independent so that in a Design Basis Accident with loss of any two divisions, safe plant shutdown for all operating modes can be accomplished with the two remaining divisions of DC power.

Separation criteria are established for preserving the independence of redundant safety-related systems and providing isolation between safety-related and nonsafety-related equipment.

Raceways are not shared by safety-related and nonsafety-related cables, or safety-related cables of a different division. Separate raceways are provided exclusively for each channel group of the Reactor Protection System solenoid wiring.

Special identification criteria, as discussed in Subsection 8.3.1.3, are applied to safety-related equipment, cabling and raceways.

The safety-related 480 VAC and 120 VAC, and 250 VDC power and control systems conform to Seismic Category I requirements and are housed in Seismic Category I structures. Seismic Qualification is in accordance with IEEE Standard 344 (Section 3.10).

Safety-related equipment and systems have been designed with the capability for periodic testing in accordance with GDC 18.

8.1.5.2.2 Uninterruptible AC Power Supply

The Uninterruptible AC Power Supply (UPS) is divided into two subsystems, the safety-related UPS and the nonsafety-related UPS.

8.1.5.2.2.1 Safety-Related Uninterruptible AC Power Supply

There is no direct safety-related AC power source required for safety-related loads. The safety-related UPS that support the safety-related logic and control functions during normal, upset, and accident conditions are provided from the four divisions of DC power through DC/AC inverters.

Each safety-related battery charger provides the safety-related AC uninterruptible power through separate and independent safety-related inverters connected to the safety-related DC bus of the same division and backed up by its divisional 480 VAC Isolation Power Center (Figure 8.1-4).

Upon loss of AC power to the Isolation Power Centers, the safety-related UPS is powered by its respective division's safety-related battery, and switching from the AC to DC source is transparent to UPS loads. Provision is made for automatic switching to the alternate bypass supply, 480 VAC to 120 VAC transformer, from its division in case of a failure of the UPS inverter power supply. The UPS normal AC power from the inverter is synchronized in both

frequency and phase with the alternate AC bypass supply, so that unacceptable voltage spikes are avoided in case of an automatic transfer from normal to alternate supply.

8.1.5.2.2.2 Nonsafety-Related Uninterruptible AC Power Supply

Each load group of the nonsafety-related Uninterruptible AC Power Supply is powered through separate and independent nonsafety-related inverters connected to the nonsafety-related DC bus and from their 480 VAC Power Center (Figure 8.1-5). Separate nonsafety-related batteries also power each DC bus.

Upon loss of AC power supply, the nonsafety-related UPS is powered by its respective nonsafety-related battery, and switching from the AC to the DC source is transparent to UPS loads. Provision is made for automatic switching to the alternate bypass supply from a 480 VAC Power Center, in case of a failure of the inverter power supply. The inverter normal AC power supply is synchronized in both frequency and phase with the alternate AC bypass supply, so that unacceptable voltage spikes are avoided in case of an automatic transfer from normal to alternate supply. The onsite standby diesel-generators provide backup for the normal and alternate 6.9 kV AC power sources that supply the 480 VAC power centers from the PIP buses.

8.1.5.2.3 Nonsafety-Related I&C Power Supply System

The I&C Power Supply System consists of regulating step-down transformers providing 208/120 VAC power to those loads not requiring uninterruptible power, and to those loads requiring an alternate, regulated power source. The I&C Power Supply System buses are shown in Figure 8.1-6.

The nonsafety-related equipment requiring I&C power is supplied by the nonsafety-related swing bus power center through regulating transformers.

8.1.5.2.4 Regulatory Requirements

The following list of criteria is addressed in accordance with Table 8.1-1, which is based on Table 8-1 of the Standard Review Plan. In general, the ESBWR is designed in accordance with the following criteria. Any exceptions or clarifications are noted below.

General Design Criteria:

- GDC 2, “Design Bases for Protection Against Natural Phenomena”
- GDC 4, “Environmental and Dynamic Effects Design Bases”
- GDC 5, “Sharing of Structures, Systems, and Components” – The ESBWR does not share any safety-related structure, system or component with any other unit. Therefore, this GDC is not applicable.
- GDC 17, “Electric Power Systems” - Safety-related DC power sources are provided to support passive core cooling and passive containment integrity safety-related functions. No offsite or diesel-generator-derived AC power is required for 72 hours after an abnormal event. However, the ESBWR standard design complies with GDC 17 with respect to two independent and separate offsite power sources and standby onsite power sources.

- GDC 18, "Inspection and Testing of Electric Power Systems" - Safety-related DC power sources are provided to support passive core cooling and passive containment integrity safety-related functions. No offsite or diesel-generator-derived AC power is required for 72 hours after an abnormal event. However, the nonsafety-related offsite and onsite AC systems that supply AC power to the Isolation Power Centers are testable and meet GDC 18 requirements.
- GDC 50, "Containment Design Basis"

NRC Regulatory Guides:

- Regulatory Guide 1.6, "Independence Between Redundant Standby (Onsite) Power Sources and Between Their Distribution Systems" – The ESBWR Standard Plant does not need or have safety-related standby AC power sources; however, portions pertaining to the safety-related DC system are addressed within Subsection 8.3.2. The ESBWR offsite and onsite nonsafety-related power sources do comply with independence and redundancy between their sources and distribution systems.
- Regulatory Guide 1.9, "Application and Testing of Safety-Related Diesel Generators in Nuclear Power Plants"– The ESBWR diesel-generator units are not safety-related, nor is AC power needed for the ESBWR to achieve safe shutdown, therefore this regulatory guide is not applicable to the ESBWR design.
- Regulatory Guide 1.32, "Criteria for Power Systems for Nuclear Power Plants." Safety-related DC power sources are provided to support passive core cooling and containment integrity safety functions. No offsite or diesel-generator-derived AC power is required for 72 hours after an abnormal event. IEEE 1188, not IEEE 450, is applicable to VRLA batteries.
- Regulatory Guide 1.47, "Bypassed and Inoperable Status Indication for Nuclear Power Plant Safety Systems."
- Regulatory Guide 1.53, "Application of the Single-Failure Criterion to Safety Systems."
- Regulatory Guide 1.63, "Electric Penetration Assemblies in Containment Structures for Nuclear Power Plants."
- Regulatory Guide 1.75, "Criteria for Independence of Electrical Safety Systems." Class 1E safety-related equipment relies only upon DC-derived power and meets the design requirements for physical independence.
- Regulatory Guide 1.81, "Shared Emergency and Shutdown Electric Systems for Multi-Unit Nuclear Power Plants" – The ESBWR Standard Plant is designed as a single-unit plant. Therefore, Regulatory Guide 1.81 is not applicable.
- Regulatory Guide 1.106, "Thermal Overload Protection for Electric Motors on Motor-Operated Valves." The ESBWR does not require 480 VAC electric motors or motor operated valves to perform any safety-related function, therefore, this regulatory guide is not applicable.
- Regulatory Guide 1.118, "Periodic Testing of Electric Power and Protection Systems" (see Subsection 13.5.2 for Operating and Maintenance Procedures and Chapter 16 for Technical Specifications).

- Regulatory Guide 1.128, "Installation Design and Installation of Large Lead Storage Batteries for Nuclear Power Plants." The ESBWR Valve Regulated Lead Acid (VRLA) batteries limit the release of hydrogen to less than 1% while battery room temperature is within specified vendor limits during charging evolutions. IEEE 344, IEEE 323, IEEE 485, and IEEE 1187 apply to VRLA batteries. IEEE 484 is not applicable for VRLA batteries.
- Regulatory Guide 1.129, "Maintenance, Testing, and Replacement of Large Lead Storage Batteries for Nuclear Power Plants" – The ESBWR design allows for periodic testing, maintenance and replacement of batteries in accordance with IEEE 1188. IEEE 450 is not applicable for VRLA batteries.
- Regulatory Guide 1.153, "Criteria for Safety Systems."
- Regulatory Guide 1.155, "Station Blackout" – The ESBWR does not require AC power to achieve safe shutdown. Thus, the ESBWR meets the intent of Regulatory Guide 1.155. The Station Blackout evaluation is provided in Section 15.5.
- Regulatory Guide 1.160, "Monitoring the Effectiveness of Maintenance at Nuclear Power Plants" - Maintenance Rule development is addressed in Table 1.9-21 and Subsection 13.5.2 for Operating and Maintenance Procedures.
- Regulatory Guide 1.204, "Guidelines for Lightning Protection of Nuclear Power Plants" Refer to Subsection 8A.1.2.

Branch Technical Positions:

- BTP ICSB 4 (PSB), "Requirements on Motor-Operated Valves in the ECCS Accumulator Lines" – This BTP is written for pressurized water reactor (PWR) plants only and is therefore not applicable to the ESBWR.
- BTP ICSB 8 (PSB), "Use of Diesel-Generator Sets for Peaking" – The ESBWR can achieve safe shutdown without AC power, and the diesel-generator sets are not safety-related. Therefore, this BTP is not applicable.
- BTP ICSB 11 (PSB), "Stability of Offsite Power Systems" – See Subsection 8.2.2.1.
- BTP ICSB 18 (PSB), "Application of the Single Failure Criterion to Manually-Controlled Electrically-Operated Valves" - There are no safety-related, manually-controlled, electrically operated valves in the ESBWR design. All safety-related valves are automatic and require no manual action for 72 hours. This BTP is not applicable to the ESBWR design.
- BTP ICSB 21, "Supplemental Guidance for Bypass and Inoperable Status Indication for Engineered Safety Features Systems."
- BTP PSB 1, "Adequacy of Station Electric Distribution System Voltages" - Degraded Voltage in the offsite power system does not affect the safety-related systems as, the 480 VAC Isolation Power Centers do have degraded voltage protection. See Subsection 8.3.1.1.2.
- BTP PSB 2, "Criteria for Alarms and Indications Associated with Diesel-Generator Unit Bypassed and Inoperable Status" - The ESBWR has no safety-related diesel-generator.

The ESBWR diesel generator units are nonsafety-related. Therefore this criterion does not apply.

Other SRP Criteria:

- NUREG/CR 0660, "Enhancement of Onsite Diesel Generator Reliability" – The ESBWR diesel-generator units are not safety-related, nor is AC power needed to achieve safe shutdown; therefore, the NUREG is not directly applicable. However, defense-in-depth principles such as redundancy and diversity are incorporated in the design and integration of ESBWR systems.
- NUREG/CR 0737, "TMI Lessons Learned"
- NUREG-0718, Revision 1, "Licensing Requirements for Pending Applications for Construction Permits and Manufacturing License," relating to TMI Item I.D.3, "Safety System Status Monitoring," regarding the application of Regulatory Guide 1.47.
- TMI Action Item II.E.3.1, "Emergency Power Supply for Pressurizer Heater" – This criteria is applicable only to PWRs and does not apply to the ESBWR.
- TMI Action Item II.G.1, "Emergency Power for Pressurizer Equipment" – This criteria is applicable only to PWRs and does not apply to the ESBWR.

8.1.6 Compliance to Regulatory Requirements and Guidelines

Table 8.1-1 presents a matrix of regulatory requirements and guidelines, in accordance with Table 8-1 of the Standard Review Plan. Note that several criteria pertaining to safety-related diesel-generators and/or (direct) AC power systems are not applicable for the ESBWR, because the ESBWR does not require AC power to achieve safe shutdown or to perform any safety-related function. Therefore, the two diesel-generators are nonsafety-related. However, defense-in-depth principles such as redundancy and diversity are incorporated in the design and integration of ESBWR systems.

8.1.7 COL Information

None

8.1.8 References

8.1-1 Title 10, Code of Federal Regulations, Part 50 (10 CFR 50) Appendix A, "General Design Criteria for Nuclear Power Plants."

Table 8.1-1

Onsite Power System SRP Criteria Applicability Matrix

Applicable Criteria		IEEE Standard	Notes	Offsite Power System	AC (Onsite) Power System	DC (Onsite) Power System
GDC	2		7			X
GDC	4		7			X
GDC	5		1			
GDC	17		7	X	X	X
GDC	18		7	X	X	X
GDC	50				X	X
10 CFR	50.34(f)(2)(v)		6			
10 CFR	50.34(f)(2)(xiii)		2			
10 CFR	50.34(f)(2)(xx)		2			
10 CFR	50.63		7			X
RG	1.6			X	X	X
RG	1.9	387	3			
RG	1.32	308, 1188	7			X
RG	1.47		7			X
RG	1.53	379,603	7			X
RG	1.63	242, 317, 741			X	X
RG	1.75	384	7			X
RG	1.81		1			
RG	1.106					
RG	1.118	338	7			X
RG	1.128	485, 344, 323, 1187				X
RG	1.129	1188				X
RG	1.153	603	7			X
RG	1.155 (NUMARC 8700)		7			X
RG	1.160 (NUMARC 93-01)			X	X	X
RG	1.204	665, 666, 1050, C62.23		X	X	
BTP	ICSB 4	279	2			

Table 8.1-1

Onsite Power System SRP Criteria Applicability Matrix

Applicable Criteria		IEEE Standard	Notes	Offsite Power System	AC (Onsite) Power System	DC (Onsite) Power System
BTP	ICSB 8	308	3		-	
BTP	ICSB 11			X		
BTP	ICSB 18					
BTP	ICSB 21		7			X
BTP	PSB 1				X	
BTP	PSB 2		3			
NUREG-0718			6			
NUREG-0737			5			
NUREG/CR-0660			3			
TMI Action Item II.E.3.1			2			
TMI Action Item II.G.1			2			

Notes:

(1) Noted criteria are applicable to multiple unit plants only, and are not applicable to the single-unit ESBWR.

(2) The criterion is only applicable to PWRs, and thus, is not applicable to the ESBWR.

(3) The ESBWR Standard Plant does not have safety-related diesel-generators, and thus, this criterion is not applicable to the ESBWR.

(4) (Deleted)

(5) Covered by 10 CFR 50.34(f)(2)(xiii) and 50.34(f)(2)(xx).

(6) Not applicable to the ESBWR: 10 CFR 50.34 (f) and NUREG 0718 apply only to the pending applications at February 16, 1982.

(7) The safety-related UPS system and the safety-related 480 VAC Isolation Power Centers are included in the DC onsite applicability column.

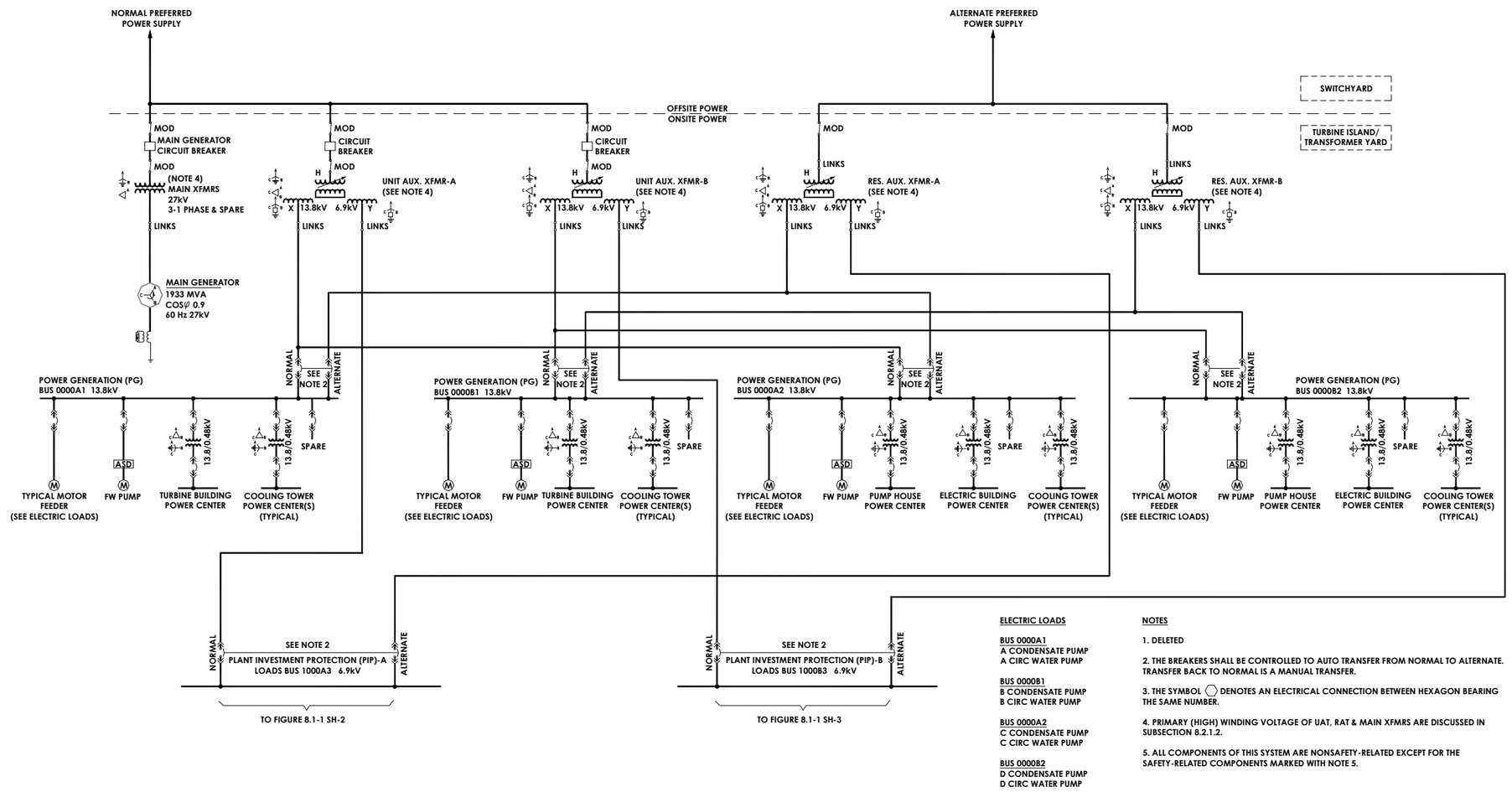

Figure 8.1-1. Electrical Power Distribution System

Sh 1 of 3

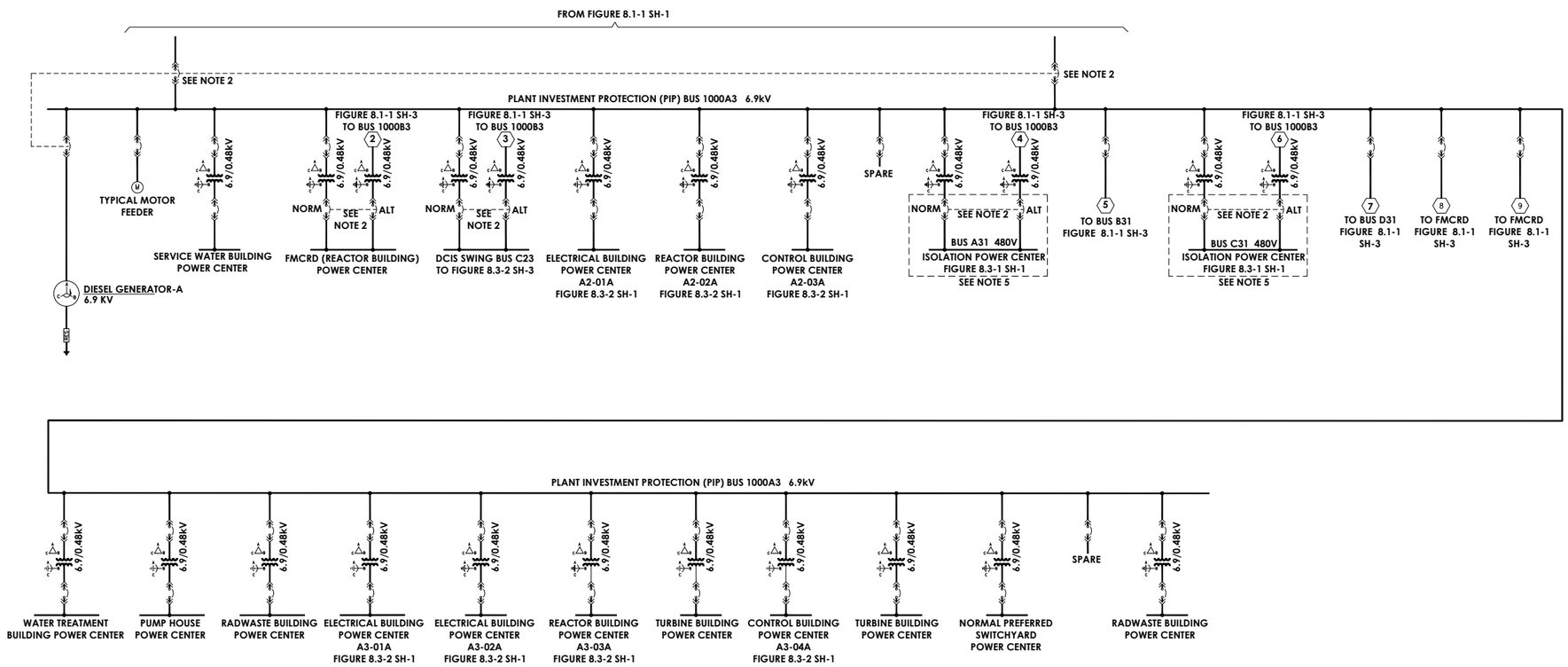

Figure 8.1-1. Electrical Power Distribution System
Sh 2 of 3

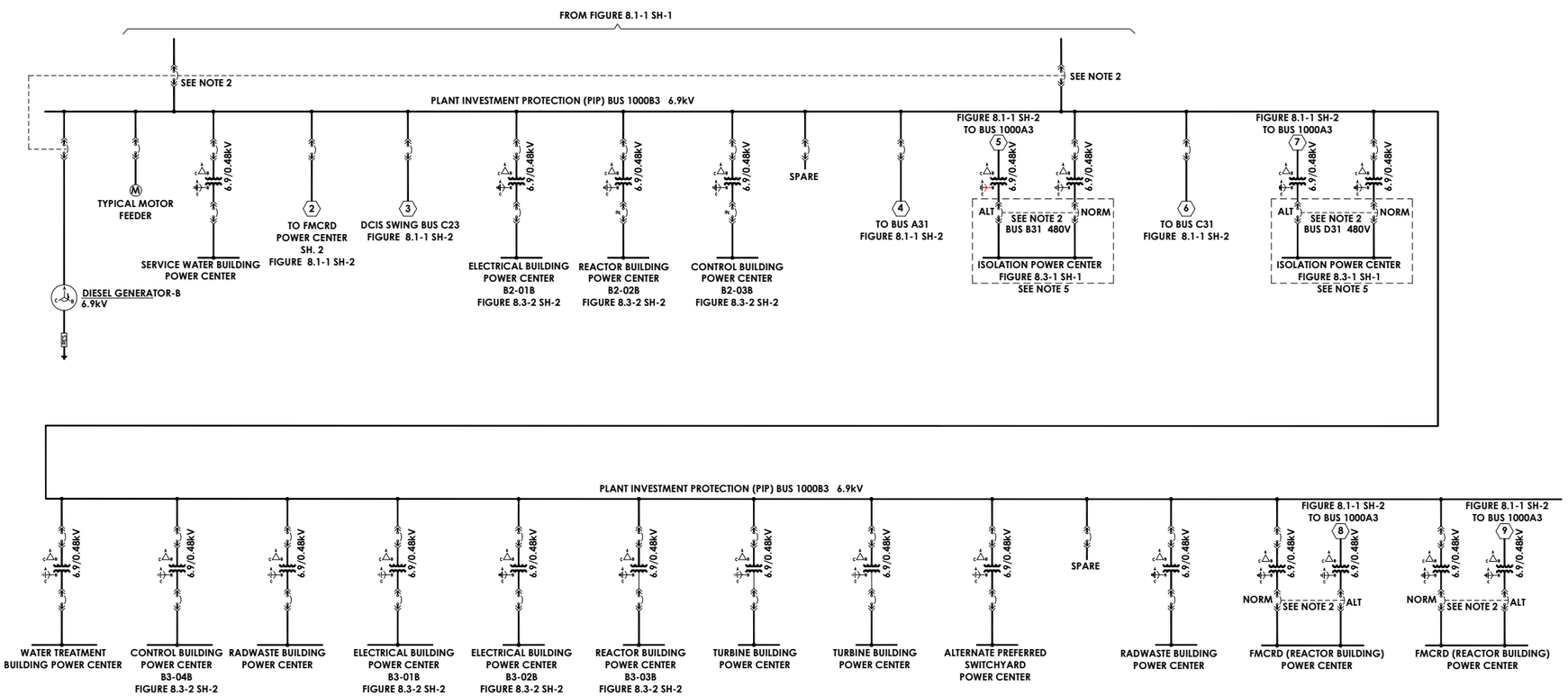

Figure 8.1-1. Electrical Power Distribution System
Sh 3 of 3

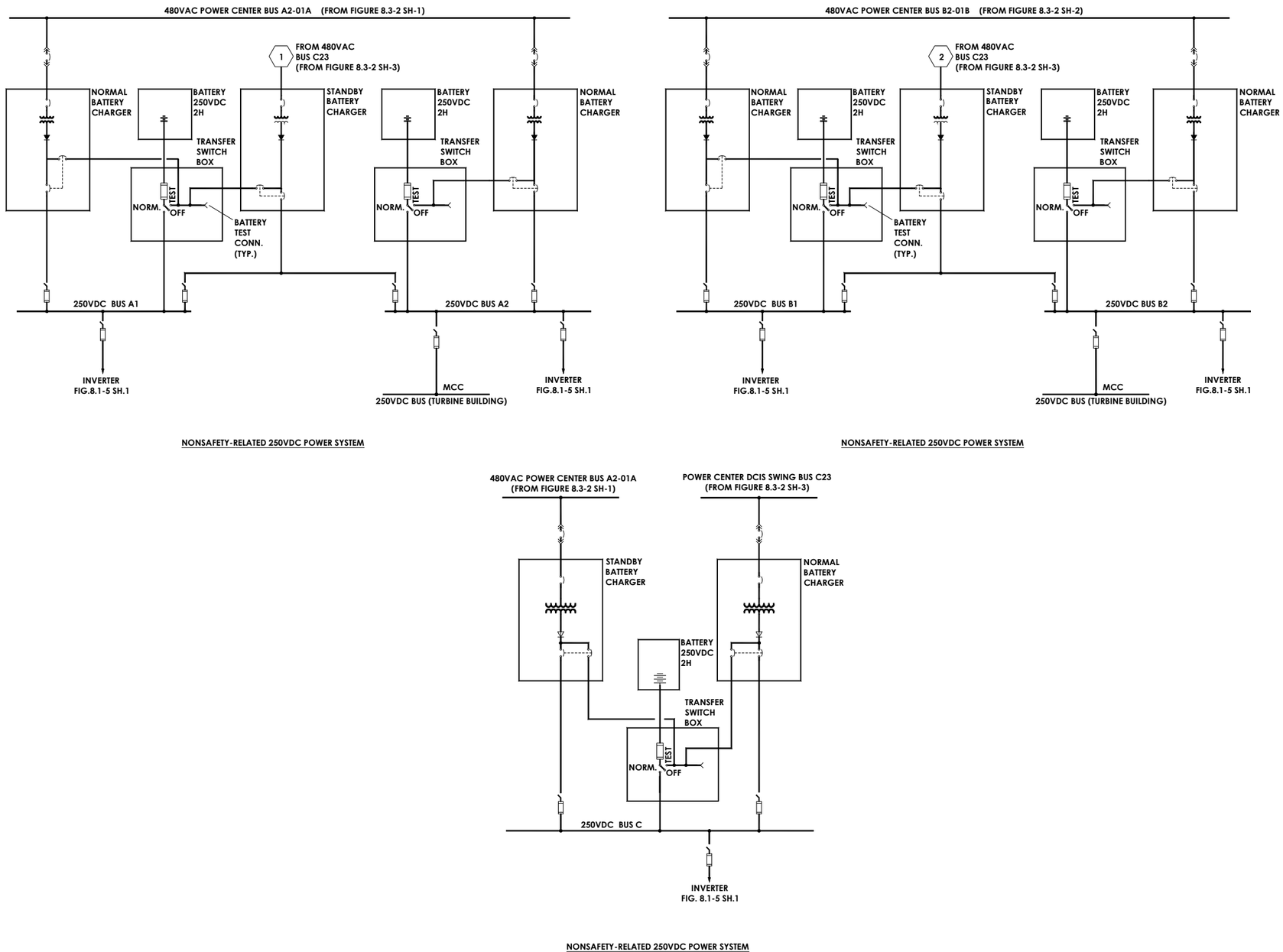

Figure 8.1-2. Direct Current Power Supply (Nonsafety-Related)
Sh 1 of 2

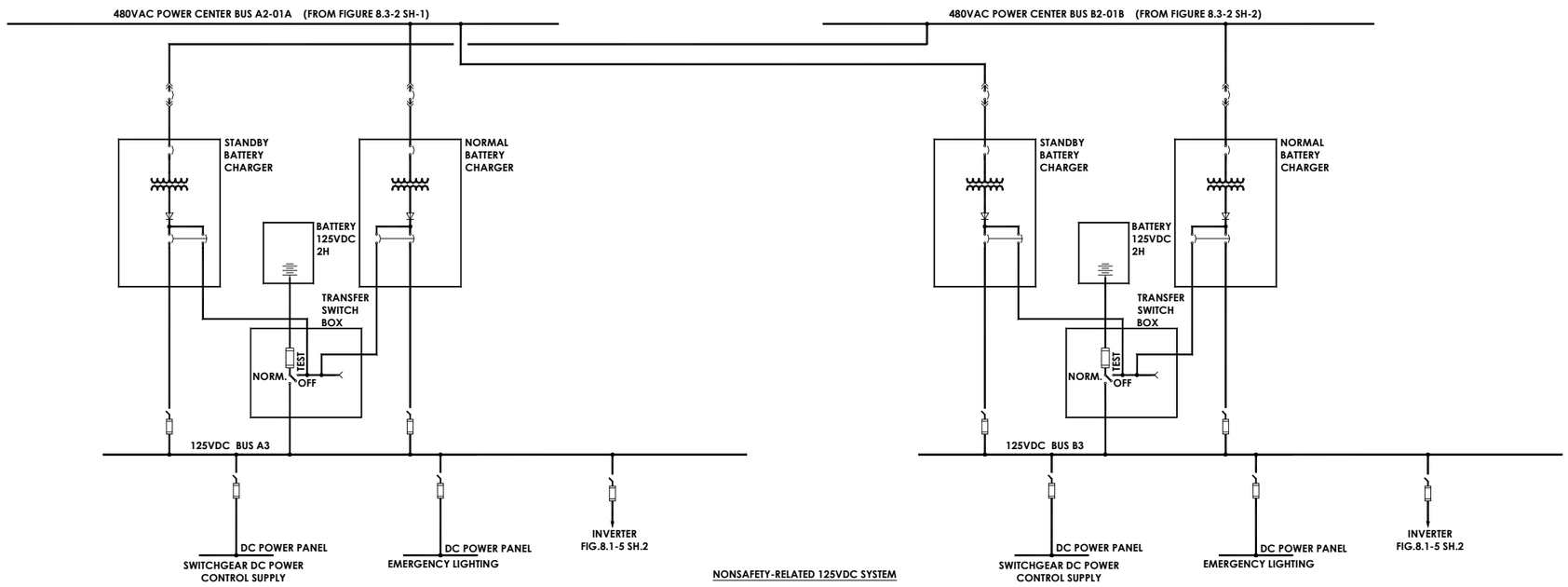

Figure 8.1-2. Direct Current Power Supply (Nonsafety-Related)

Sh 2 of 2

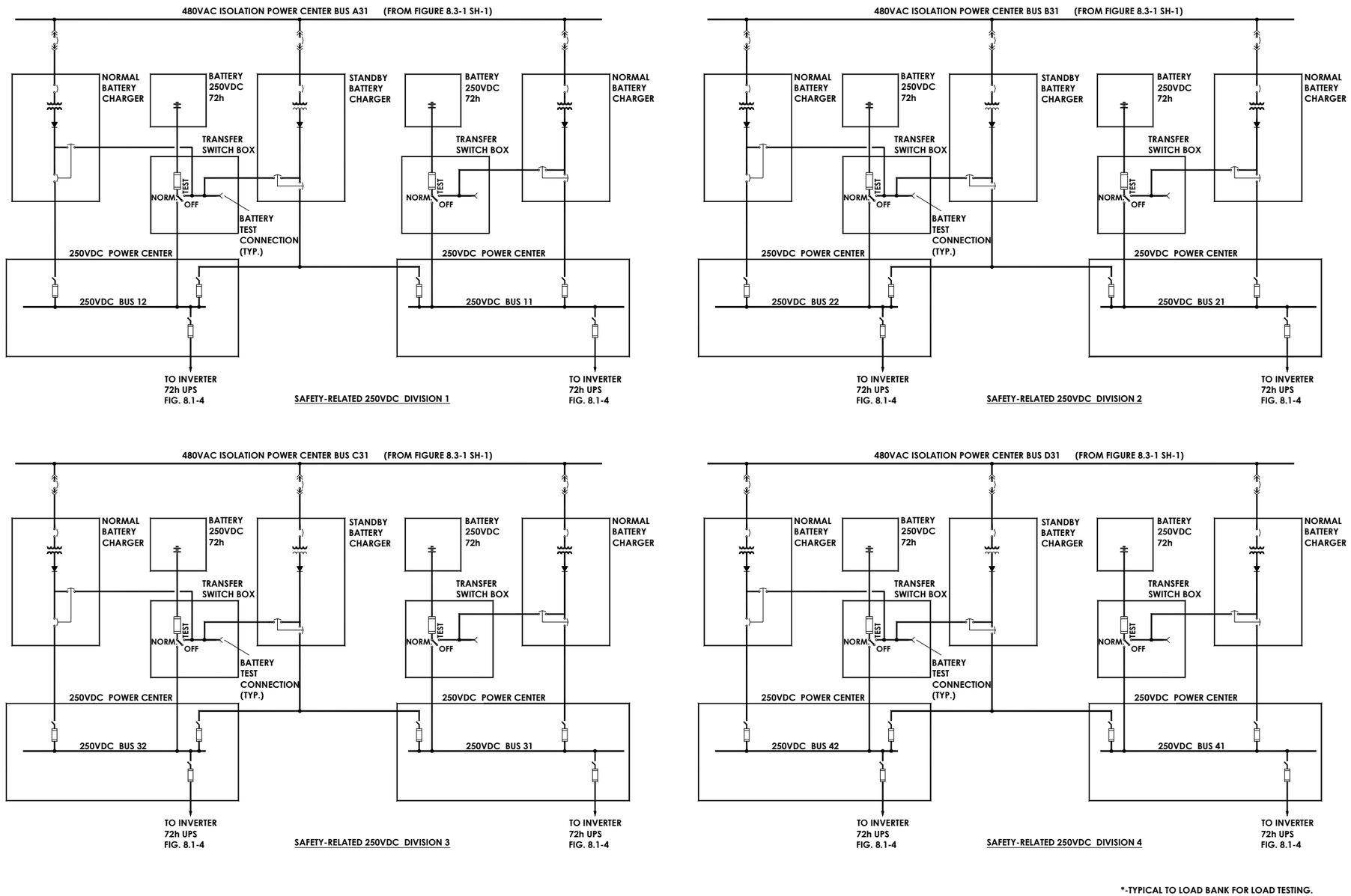

Figure 8.1-3. Direct Current Power Supply (Safety-Related)
Sh 1 of 1

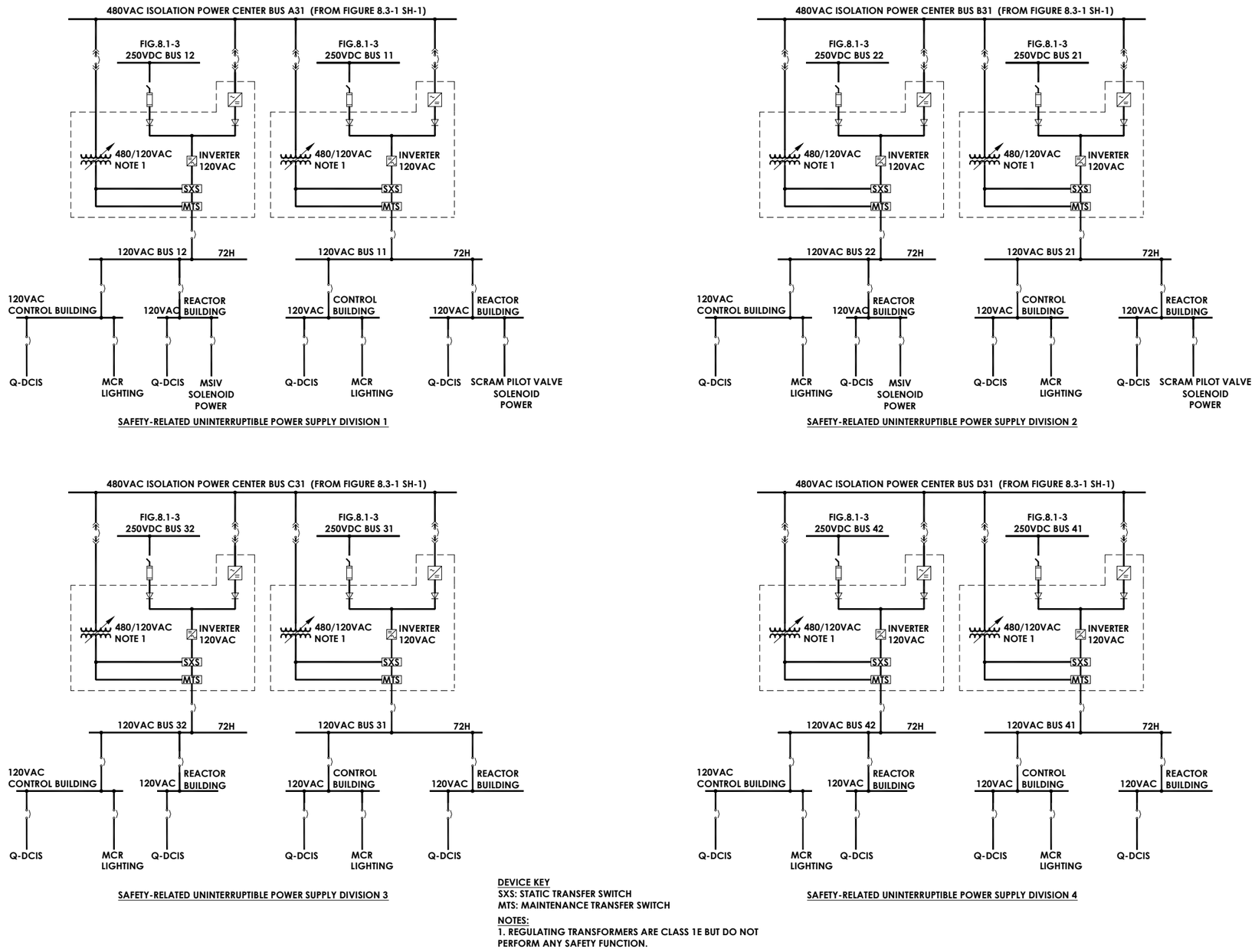

Figure 8.1-4. Uninterruptible AC Power Supply (Safety-Related)

Sh 1 of 1

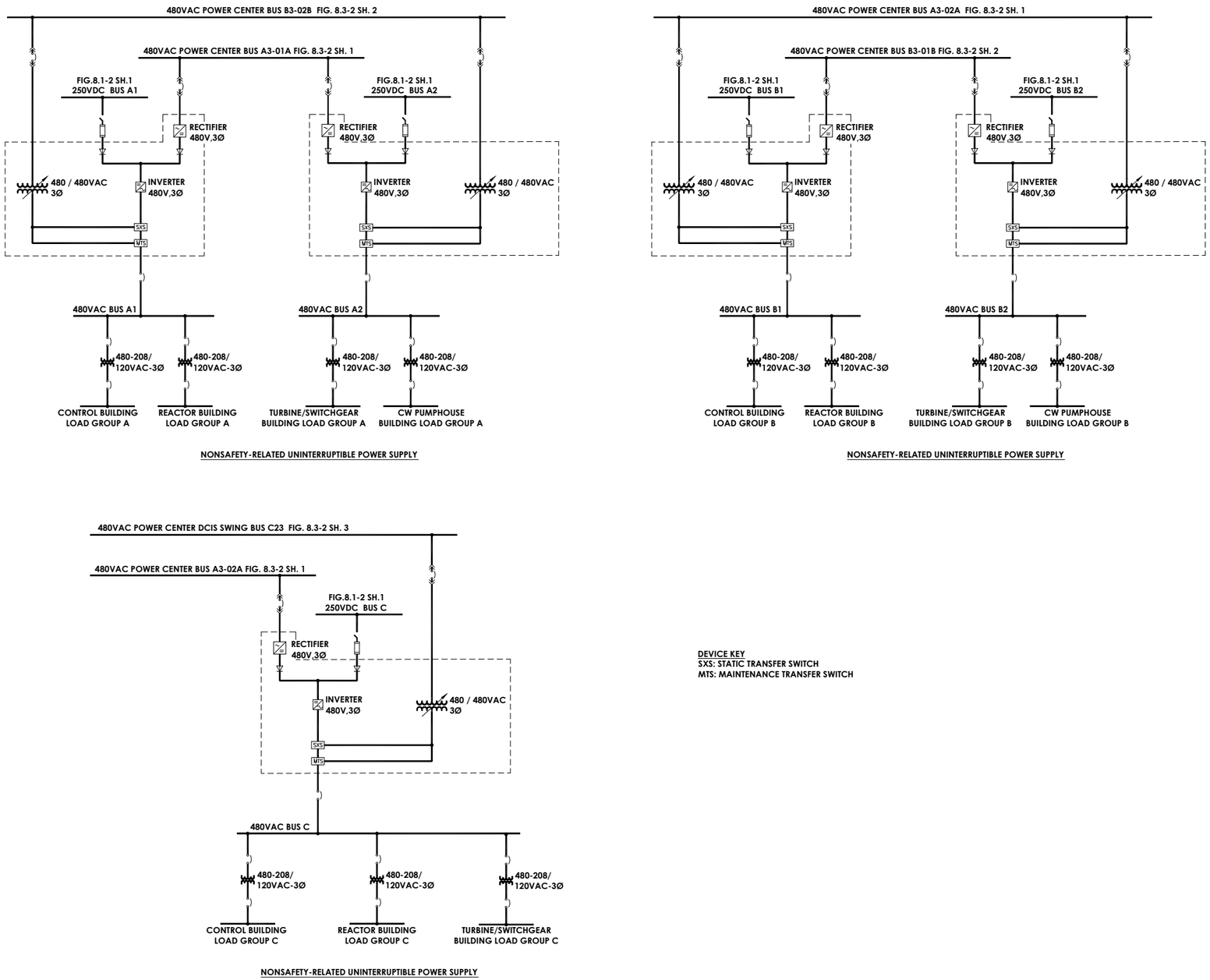

Figure 8.1-5. Uninterruptible AC Power Supply (Nonsafety-Related)
Sh 1 of 2

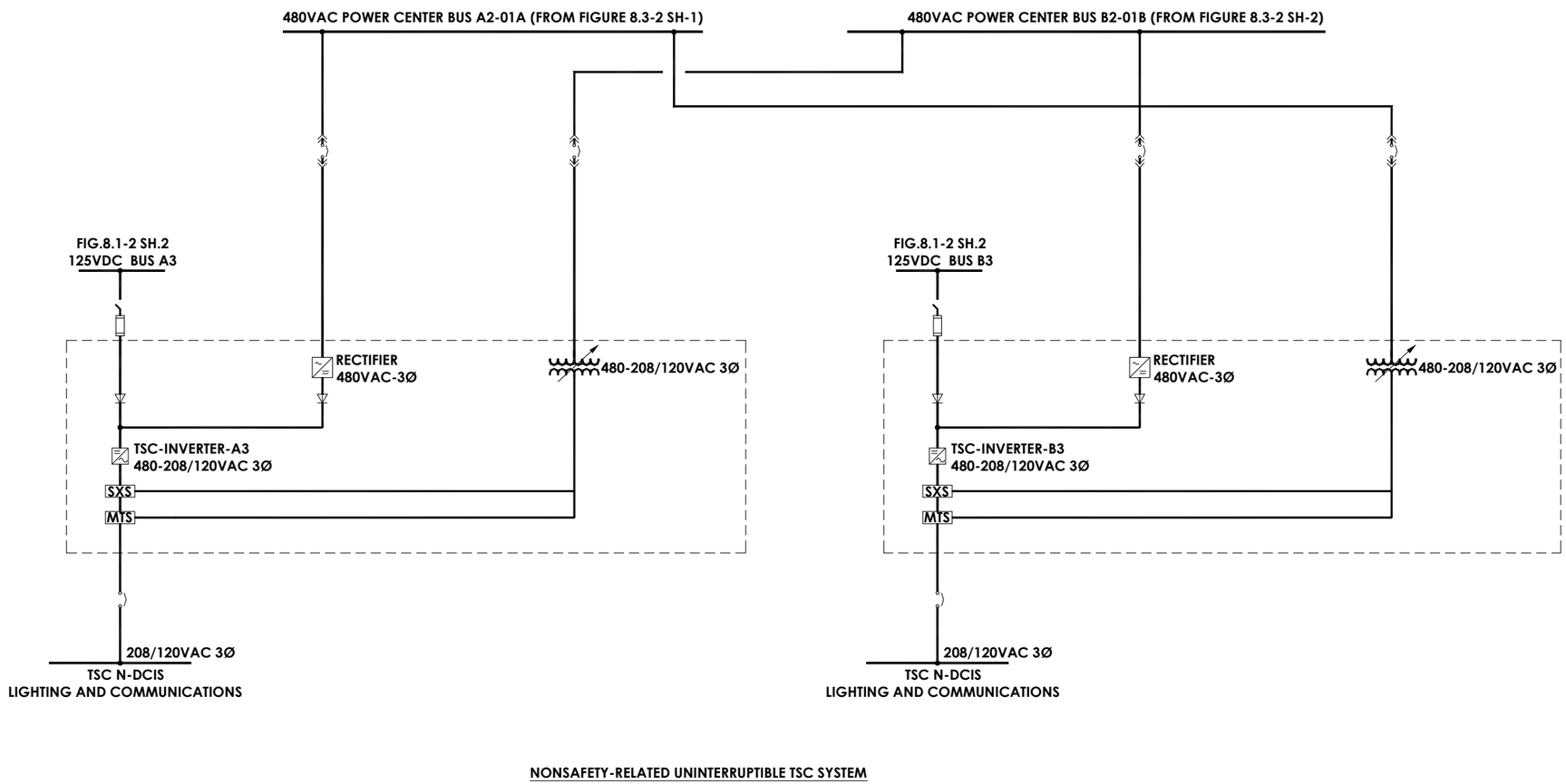

Figure 8.1-5. Uninterruptible AC Power Supply (Nonsafety-Related)
Sh 2 of 2

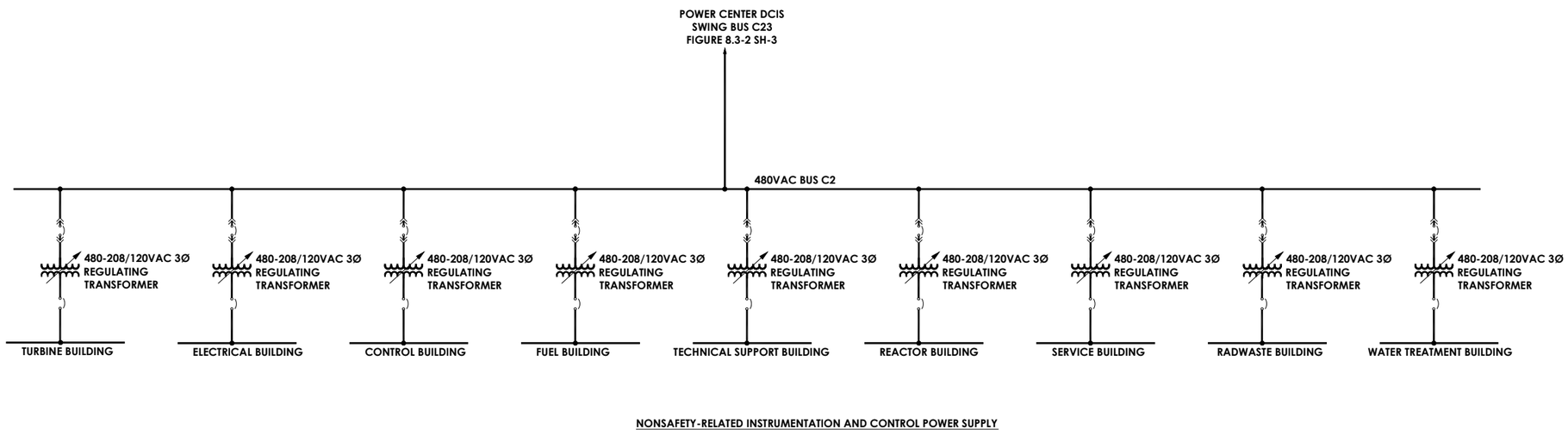

Figure 8.1-6. Instrumentation and Control Power Supply System (Nonsafety-Related)

Sh 1 of 1

8.2 OFFSITE POWER SYSTEMS

8.2.1 Description

8.2.1.1 Transmission System

The transmission system provides electric power from the utility grid to the offsite power system. The system is designed and located to minimize the likelihood of simultaneous failure during DBA and adverse environmental conditions. (See 8.2.4-1-A and 8.2.4-10-A for the transmission protocol). The transmission system design bases requirements are contained in Subsection 8.2.3.

8.2.1.2 Offsite Power System

The offsite power system is a nonsafety-related system. Power is supplied to the plant from the switchyard connected to the transmission grid offsite power sources.

The normal preferred power source is supplied to the UATs through MODs and isolation circuit breakers, as shown in Figure 8.1-1. The normal preferred power interface with the offsite power system occurs at the high voltage terminals of the main generator circuit breaker MOD and UAT MODs. The MOD feeding a faulted UAT will be opened after the UAT high voltage breaker opens.

The alternate preferred power source is supplied through the RATs. The alternate preferred power source, as an alternate power source to the plant load, may be utilized in the event of unavailability of the normal preferred power source. The alternate preferred power interface between offsite and onsite power occurs at the MODs prior to the high voltage terminals of the RATs. The MOD feeding a faulted RAT will be opened after the switchyard alternate power supply breaker opens. Fully OPEN indication of the MOD for the faulted RAT will allow the switchyard breaker to be re-closed to the unaffected RAT.

Unit synchronization is normally through the onsite main generator circuit breaker with a second offsite switchyard breaker supplying the normal preferred power source that is also designed for unit synchronization during island mode operation. Synchrocheck relays are used to ensure proper synchronization of the unit to the offsite system. Dual trip coils and redundant protective relaying schemes are provided for both the main generator circuit breaker and the normal preferred supply breakers.

The normal preferred power voltage and alternate preferred power voltage are site specific. (See 8.2.4-3-A and 8.2.4-4-A, respectively.)

8.2.1.2.1 Switchyard

The switchyard design bases requirements are contained in Subsection 8.2.3.

Protective relay schemes used for the protection of the offsite power circuits and transformers are redundant and include backup protection features.

Breakers are equipped with dual trip coils. Each redundant protection circuit, which supplies a trip signal, is powered from its redundant load group of DC power and connected to a separate

trip coil. Equipment and cabling associated with each redundant system is physically separated from its redundant counterpart.

The DC power needed to operate redundant protection and control equipment of the offsite power system is supplied from two separate, dedicated switchyard batteries, each with a battery charger fed from a separate AC bus. Each battery is capable of supplying the DC power required for normal operation of the switchyard equipment.

Two redundant Plant Investment Protection (PIP) AC power supply systems supply AC power to the switchyard auxiliary loads as shown in Figure 8.1-1 Sheets 2 and 3. Each system is supplied from separate, independent AC buses. The capacity of each system is adequate to meet the AC power requirements for normal operation of the switchyard equipment.

The switchyard design is site specific. (See 8.2.4-2-A, 8.2.4-5-A, 8.2.4-6-A, 8.2.4-7-A, and 8.2.4-8-A.)

8.2.2 Analysis

8.2.2.1 Reliability and Stability Analysis

The transmission system reliability and stability analysis is site-specific. (See 8.2.4-9-A.)

8.2.2.2 Regulatory Analysis

In accordance with the NRC Standard Review Plan (NUREG-0800), Table 8-1 and Section 8.2, the preferred offsite power distribution system is designed consistent with the following criteria, so far as it applies to nonsafety-related equipment. Any exceptions or clarifications are so noted.

Applicable Criteria:

- GDC 5, "Sharing of Structures, Systems, and Components," and Regulatory Guide 1.81, "Shared Emergency and Shutdown Electric Systems for Multi-Unit Nuclear Power Plants" – The ESBWR Reference Plant is designed as a single-unit plant. Therefore, GDC 5 and Regulatory Guide 1.81 are not applicable.
- GDC 17, "Electric Power Systems" – The ESBWR Reference Plant design does not require an offsite or diesel-generated AC source of power for 72 hours after an abnormal event. Safety-related DC power sources are provided to support passive core cooling and containment safety-related functions. However, the ESBWR standard design complies with GDC 17 with respect to two independent and separate offsite power sources and standby onsite power sources.
- GDC 18, "Inspection and Testing of Electric Power Systems" – Safety-related DC power sources are provided to support passive core cooling and containment safety-related functions. No offsite or diesel-generator-derived AC power is required for 72 hours after an abnormal event. However, the nonsafety-related offsite and onsite AC systems that supply AC power to the Isolation Power Centers are testable.
- 10 CFR 50.63, "Loss of All Alternating Current Power" – The ESBWR Design Bases do not rely upon any offsite power system to achieve and maintain safe shutdown. See the Station Blackout evaluation in Subsection 15.5.5.

- Regulatory Guide 1.32, "Criteria for Power Systems for Nuclear Power Plants" – The offsite power system is nonsafety-related. Therefore, Regulatory Guide 1.32 is not applicable to the ESBWR offsite power system.
- Regulatory Guide 1.47, "Bypassed and Inoperable Status Indication for Nuclear Power Plant Safety Systems," and BTP ICSB 21, "Supplemental Guidance for Bypass and Inoperable Status Indication for Engineered Safety Features Systems" – The offsite power system is nonsafety-related. Therefore, Regulatory Guide 1.47 and BTP ICSB 21 are not applicable to the ESBWR offsite power system.
- BTP ICSB 11, "Stability of Offsite Power Systems" – This topic is addressed in Subsection 8.2.2.1.

8.2.3 Design Bases Requirements

The offsite power system of the ESBWR Reference Plant is based on certain design bases requirements. These design requirements are as follows:

- In case of failure of the normal preferred power supply circuit, the alternate preferred power supply circuit remains available.
- The normal preferred circuit and the alternate preferred circuit are electrically independent and are physically separated from each other. The normal preferred and the alternate preferred circuits are fed from separate transmission systems, each capable of supplying the shutdown loads. Both circuits may share a common switchyard but adequate separation exists.
- The switchyard to which the main offsite circuit is connected has two full capacity main buses arranged such that:
  - Any incoming or outgoing transmission line can be switched without affecting another line.
  - Any circuit breaker can be isolated for maintenance without interrupting service to any circuit.
  - Faults of a single main bus are isolated without interrupting service to any circuit.
- Circuit breakers are sized and designed in accordance with IEEE Standard C37.06 (Reference 8.2-1). Disconnecting switches are sized and designed in accordance with IEEE Standard C37.32 (Reference 8.2-2).
- Conductors associated with the normal preferred and alternate preferred circuits are routed separately and in separate raceways apart from each other and from onsite power system cables. However, they may share a common underground duct bank as indicated below.
- Associated control, instrumentation, and miscellaneous power cables of the alternate preferred circuit, if located underground in the same duct bank as cables associated with the normal preferred circuit between the switchyard and the power block, are routed in separate raceways.

- Interface protocols shall be established between the control room and the transmission operator, in accordance with the interconnection service agreement.
- Conductors associated with the alternate preferred circuit are routed in trenches within the switchyard separate from cables associated with the normal preferred circuit.
- A transmission system reliability and stability review of the site specific configuration to which the plant is connected will be performed to determine the reliability of the offsite power system and verify that it is consistent with the probability risk analysis of Chapter 19. (See 8.2.4-9-A.)
- Provisions are made to auto-disconnect the high side of a failed UAT or RAT through protective relaying to UAT input circuit breakers and RAT offsite switchyard breaker.
- A station ground grid is provided consisting of a ground mat below grade at the switchyard that is connected to the foundation embedded loop grounding system provided for the entire power block and associated buildings. (See Subsection 8A.1.1 for the description of the electrical grounding and surge protection system.)

8.2.4 COL Information

8.2.4-1-A Transmission System Description

The COL applicant will describe the transmission system. (Subsection 8.2.1.1)

8.2.4-2-A Switchyard Description

The COL applicant will describe the switchyard. (Subsection 8.2.1.2.1)

8.2.4-3-A Normal Preferred Power

The COL applicant will specify the normal preferred power voltage. (Subsection 8.2.1.2)

8.2.4-4-A Alternate Preferred Power

The COL applicant will specify the alternate preferred power voltage. (Subsection 8.2.1.2)

8.2.4-5-A Protective Relaying

The COL applicant is responsible for switchyard protective relaying and will ensure such relaying is coordinated, reviewed, and accepted by the applicable grid reliability organization. (Subsection 8.2.1.2.1)

8.2.4-6-A Switchyard DC Power

The COL applicant will address switchyard DC power. (Subsection 8.2.1.2.1)

8.2.4-7-A Switchyard AC Power

The COL applicant will address switchyard AC power. (Subsection 8.2.1.2.1)

8.2.4-8-A Switchyard Transformer Protection

The COL applicant will address switchyard transformer protection. (Subsection 8.2.1.2.1)

8.2.4-9-A Stability and Reliability of the Offsite Transmission Power Systems

The COL applicant will address the stability and reliability of the offsite transmission system. (Subsection 8.2.2.1)

8.2.4-10-A Interface Requirements

The COL applicant is responsible for the interface protocol requirements. (Subsection 8.2.3)

8.2.5 References

8.2-1 IEEE Standard C37.06, "AC High-Voltage Circuit Breakers Rated on a Symmetrical Current Basis - Preferred Ratings and Related Required Capabilities."

8.2-2 IEEE Standard C37.32, "High-Voltage Switches, Bus Supports, and Accessories Schedules of Preferred Ratings, Construction Guidelines, and Specifications."

8.3 ONSITE POWER SYSTEMS

8.3.1 AC Power Systems

8.3.1.1 Description

The main power transformer is within the onsite power system and consist of three single-phase transformers and an installed spare.

The UATs consist of two, three-phase transformers. The UATs provide normal preferred offsite power or main generator island mode power to each of the plant's two power generation and plant investment protection load groups.

The RATs consist of two three-phase transformers fed from the alternate preferred offsite power source. The RATs provide alternate preferred power to the plant's two power generation and plant investment protection load groups.

The RATs are of the same size as the UATs, and each functions as a backup power source in the event of a UAT failure.

The main power transformers, UATs and RATs, are designed and constructed to withstand the mechanical and thermal stresses produced by external short circuits, and meet the corresponding requirements of IEEE Standard C57.12.00 (Reference 8.3-12).

An onsite main generator circuit breaker is provided with capability of interrupting the maximum available fault current. The main generator circuit breaker is sized and designed in accordance with IEEE Standard C37.010 (Reference 8.3-28). The main generator circuit breaker allows the generator to be taken off line and the main grid to be utilized as an immediate access power source for the onsite AC power system. Start-up power is normally provided through the UATs from the offsite power system.

The onsite isolated phase bus duct provides the electrical interconnection between the main generator output terminals and the low voltage terminals of the main transformers.

Onsite non-segregated phase bus duct provide for the electrical interconnection between the RATs and the 13.8 kV and 6.9 kV switchgear buses and are physically separated from the bus ducts provided for the interconnection of the UATs and the switchgear buses to minimize the likelihood of simultaneous failure.

Disconnect links are provided for the main transformers so that a failed transformer may be taken out of service and the installed spare connected.

Input isolation breakers (Reference 8.3-26), MODs, and disconnect links are provided for the UATs so that a failed transformer may be taken out of service. On loss of power from the UATs, 13.8 kV and 6.9 kV switchgear buses are automatically transferred to the RATs, which are connected to the alternate preferred power source.

Disconnect links in addition to MODs are provided for the RATs so that a failed transformer may be taken out of service. Each of the connected RATs has the capability to replace one UAT.

There is both a normal and an alternate preferred power path to the safety-related electrical system if the plant is operating with a RAT in place of an out of service UAT.

The onsite AC power system consists of a 60 Hz standby onsite AC power supply system and various pieces of electrical distribution equipment. Figure 8.1-1 shows the plant main one line diagram. The onsite power distribution system has multiple nominal bus voltage ratings. Throughout the discussion and on all the design drawings the equipment utilization voltages are designated as 13.8 kV, 6.9 kV, 480/277V, 208/120V and 240/120V.

The onsite AC power system is configured into two separate power load groups. Each power load group is fed by a separate UAT, each with a redundant RAT for backup, and consists of two types of buses:

- **Power Generation (PG) nonsafety-related buses** - are those buses that are not directly backed by standby onsite AC power sources and have connections to the normal preferred or alternate preferred offsite source through the UATs or RATs, respectively. The PG nonsafety-related buses are the 13.8 kV unit auxiliary switchgear and associated lower voltage load buses.
- **Plant Investment Protection (PIP) nonsafety-related buses** - are those buses that are backed by the standby onsite AC power supply system and have connections to the normal preferred and alternate preferred offsite sources through the UATs and RATs, respectively. Backfeed to the standby onsite AC power source is prevented by reverse power relaying. The PIP nonsafety-related buses are the 6.9 kV PIP buses and associated lower voltage load buses exclusive of the safety-related Isolation Power Center buses.

The PG nonsafety-related buses feed nonsafety-related loads required exclusively for unit operation and are normally powered from the normal preferred power source through the UATs. These buses are also capable of being powered from the alternate preferred power source (RATs), through an auto bus transfer, in the event that the normal preferred power source is unavailable. On restoration of UAT power, a manually selected bus transfer may be performed.

The PIP nonsafety-related buses feed nonsafety-related loads generally required to remain operational at all times, including when the unit is shut down. In addition, the PIP nonsafety-related buses supply AC power to the safety-related buses. The PIP nonsafety-related buses are backed up by a separate standby onsite AC power supply system connected to each PIP bus. These buses are also capable of being powered from the alternate preferred power source (RATs), through an auto bus transfer, in the event that the normal preferred power source is unavailable. On restoration of UAT power, a manually selected bus transfer may be performed.

8.3.1.1.1 Medium Voltage AC Power Distribution System

The medium voltage AC power distribution system consists of the onsite electric power distribution circuits that operate at 13.8 kV and 6.9 kV. The system begins at the connection of the input terminals of the 13.8 kV and 6.9 kV feeder circuit breakers that are supplied power from the UATs and RATs, and at the output terminals of the plant onsite standby AC power sources. The system ends at the input terminals of medium voltage load breakers. The system includes switchgear buses and circuit breakers as well as their associated local instrumentation, controls, and protective relays.

Power is supplied from the UATs and RATs at 13.8 kV and 6.9 kV to the PG and PIP buses. There are four PG buses, each being powered from one of the two UATs, or if the UATs are unavailable, from one of the two RATs. The source breakers for each PG bus are electrically

interlocked to prevent simultaneous connection of UATs and RATs to the PG buses under a faulted condition.

Each PIP bus is normally powered from the normal preferred power source through the UAT of the same load group. Additionally, in the event of unavailability of the normal preferred power source, each PIP bus has connections to and can be powered from the alternate preferred power source through the RAT of the same load group. The source breakers of the normal and alternate preferred power sources are electrically interlocked to prevent simultaneous connection of UATs and RATs to the PIP buses under a faulted condition.

Standby AC power for the PIP nonsafety-related buses is supplied by standby diesel-generators at 6.9 kV and distributed by the nonsafety-related power distribution system. The 6.9 kV PIP buses are automatically transferred to the standby diesel-generators when the normal and alternate preferred power supplies to these buses are lost.

Each 13.8 kV and 6.9 kV bus has a safety grounding circuit breaker, not shown on the one line diagram, designed to protect personnel during maintenance operations. (See Subsection 13.5.1.)

8.3.1.1.2 Low Voltage AC Power Distribution System

The low voltage AC power distribution system consists of the onsite electric power distribution circuits that operate at 480V through 120V, exclusive of plant lighting. For a discussion of the plant 120V systems refer to Subsections 8.3.1.1.3 and 8.3.1.1.4. The low voltage system begins at the output terminals of the medium voltage feeder breakers to the power center transformers . The system ends at the input terminals of load breakers.

The low voltage AC power distribution system includes power centers, motor control centers (MCCs), distribution transformers, and distribution panels as well as the associated overcurrent protective devices, protective relaying, and local instrumentation and controls. It also includes all cables interconnecting the buses to their sources and loads.

Power is supplied from the power center transformers to the 480V power centers. The power centers supply power to motor loads of approximately 100 kW through 185 kW, and to the 480V MCCs. The power centers are of the single-fed or double-ended type depending on the redundancy requirements of the loads powered by a given power center. The power supplies to the double-ended power center transformers of the PIP nonsafety-related buses are supplied from different buses. Each double-ended power center is normally powered by its normal power source through its normal source main breaker, with the alternate source main breaker open. The power center normal and alternate source main breakers are electrically interlocked to prevent simultaneous powering of the power center by normal and alternate sources.

Isolation Power Centers

The Isolation Power Centers are powered from the PIP nonsafety-related buses, which are backed up by the standby diesel-generators. There are four Isolation Power Centers, one each for Divisions 1, 2, 3 and 4. Each Isolation Power Center is double-ended and can be powered from either of the PIP load group buses. The normal and alternate source main breakers of each Isolation Power Center are electrically interlocked to prevent powering the Isolation Power Center from the normal and alternate sources simultaneously. The Isolation Power Centers are shown in Figure 8.3-1.

The Isolation Power Centers supply power to safety-related loads of their respective division. These loads consist of the safety-related battery chargers, rectifiers, and regulating transformers as discussed in Subsections 8.3.2 and 8.3.1.1.3. In addition, there is no safety-related lighting that operates directly from the 480 VAC in the ESBWR design. The lighting system is discussed in Chapter 9.

Isolation power centers are protected against degraded voltage and frequency conditions by way of voltage and frequency relays installed in each Isolation Power Center to prevent tripping of all Isolation Power Center loads, in accordance with BTP PSB1. The four safety-related Isolation Power Centers are located in the Seismic Category I Reactor Building in their respective divisional areas.

Motor Control Centers

MCCs supply 99 kW and smaller motors, control power transformers, process heaters, motor-operated valves and other small electrically operated auxiliaries, including 480 - 208/120V and 480 - 240/120V transformers. MCCs are assigned to the same load group as the power center that supplies their power.

8.3.1.1.3 Uninterruptible AC Power Supply System

Safety-Related Uninterruptible AC Power Supply System

Figure 8.1-4 shows the overall safety-related Uninterruptible AC Power Supply (UPS) system. The safety-related UPS for each of the four divisions is supplied from a 480V Isolation Power Center in the same division. The Isolation Power Centers are connected to PIP nonsafety-related buses, which are backed by standby diesel-generators. Divisions 1, 2, 3 and 4 each have two rectifiers, two batteries and two inverters. Each rectifier receives 480 VAC normal power from the Isolation Power Center of that division and converts it to 250 VDC. The 480 VAC/250 VDC rectifier and a safety-related 72-hour battery of that division supply 250 VDC power through diodes to a common inverter with an output of 120 VAC single phase.

Power is distributed to the individual safety-related loads from associated 120 VAC distribution panels, which supply power to the Reactor Building and the Control Building.

The plant design and circuit layout of the UPS provide physical separation of the equipment, cabling, and instrumentation essential to plant safety. Equipment of each division of the safety-related UPS distribution system is located in an area separated physically from the other divisions. No provisions exist for the interconnection of the safety-related UPS buses of one division with those of another division or nonsafety-related power. All components of safety-related UPS AC systems are housed in Seismic Category I structures.

Refer to Subsection 8.3.1.1.5 for a discussion of physical separation and independence.

Four divisions of safety-related UPS provide 120 VAC power for the Q-DCIS loads/logic components (reference Section 7.1 for Q-DCIS description) and other safety-related loads requiring uninterruptible power (see Figure 8.1-4). Two divisions (1 and 2) of safety-related power supply the RPS scram pilot valve solenoids and the same two divisions supply power to the MSIV solenoids (see Figure 7.2-1 and Figure 8.1-4).

The four divisions of safety-related UPS are shown in Figure 8.1-4. The safety-related UPS buses are each supplied independently from their divisional safety-related inverters, which, in

turn, are powered from one of the independent and redundant DC buses of the same division and from their Isolation Power Center. The divisional DC bus is powered through a battery charger connected to its divisional Isolation Power Center, and backed by the division's safety-related batteries. A static transfer switch is provided for transferring safety-related UPS AC load from the safety-related inverter output to a direct AC feed from the divisional Isolation Power Center through a safety-related regulating transformer should an inverter failure occur. A manual maintenance transfer switch is provided for transferring safety-related UPS AC loads from the safety-related inverter output to a direct AC feed from the safety-related divisional Isolation Power Center through a safety-related regulating transformer in order to perform inverter maintenance without removing safety-related UPS AC loads from service.

Routine maintenance can be conducted on equipment associated with the safety-related UPS power supply. Inverters, rectifiers, and solid state switches can be inspected, serviced and tested channel by channel without tripping the RPS logic.

UPS Components - Each of the four safety-related divisions includes the following safety-related UPS components:

- Two solid-state UPS rectifiers, to convert 480 VAC to 250 VDC;
- Two solid-state UPS inverters, to convert 250 VDC to 120 VAC power;
- Two solid-state transfer switches to sense inverter failure and automatically switch to safety-related 480/120 VAC power;
- Two manual bypass switches for inverter or rectifier maintenance; and
- Power distribution panel boards to provide power to all safety-related loads requiring uninterruptible 120 VAC power.

Operating Configuration - The four divisions of safety-related UPS operate independently, providing power to all safety-related loads within their division requiring uninterruptible AC power. The normal power source for each division's inverter is the same division's Isolation Power Center, which provides AC power to the rectifier. Transfer from the 480 VAC power supply to the 250 VDC bus is done automatically and passively in case of loss of the normal power source. Transfer from the inverter to the alternate AC source (provided via the division's Isolation Power Center through a regulating transformer) is done automatically in case of inverter failure. An alarm is provided in the control room for any of the alternate operating lineups.

Nonsafety-Related Uninterruptible Power Supply System

The nonsafety-related UPS provides reliable, uninterruptible AC power for nonsafety-related equipment needed for continuity of power plant operation. UPS loads are divided into three load groups. UPS load groups A and B each include two solid-state inverters, two solid-state rectifiers, two solid-state transfer switches, two manual transfer switches, and two regulating transformers with associated distribution panels (Figure 8.1-5). UPS load group C includes one solid-state inverter, one solid-state rectifier, one solid-state transfer switch, one manual transfer switch, and one regulating transformer with associated distribution panels.

The normal power supply for the A and B load groups of the nonsafety-related UPS is through a nonsafety-related 480 VAC power center fed from the A and B PIP buses, respectively.. In case

of failure of the 480 VAC power supply, transfer from the 480 VAC power center to the nonsafety-related 250 VDC bus is automatic and passive. Transfer from the normal AC power source through the inverter to the alternate AC power source occurs by automatic static transfer should an inverter failure occur. An alarm in the main control room sets off when an alternate lineup of the nonsafety-related UPS occurs.

A third nonsafety-related UPS is provided to supply additional nonsafety-related loads that require uninterruptible power. This UPS is normally powered from 480 VAC power centers, which receive power from the diesel-backed PIP-A bus. Should a failure of the normal power supply occur, the alternate power supply to the UPS is from the 250 VDC bus. During loss of normal and alternate power supply or inverter failure, loads continue to get power from the 480 VAC DCIS double-ended (PIP-A or PIP-B) Swing Bus, which also supplies power during maintenance of the inverter and its associated components.

Two dedicated nonsafety-related UPS (Figure 8.1-5) are provided for the Technical Support Center (TSC), also in a two-load group configuration. Power for each TSC nonsafety-related UPS is normally supplied from a 480 VAC power center. In case of failure of the 480 VAC power supply, transfer from the 480 VAC power center to the nonsafety-related 125 VDC bus is automatic and passive. Transfer from the normal AC power source through the inverter to the alternate AC power source occurs by automatic static transfer should an inverter failure occur.

The 480 VAC power centers, which provide power to the nonsafety-related battery chargers, are connected to PIP nonsafety-related buses that are backed up by standby diesel-generators.

8.3.1.1.4 Instrumentation and Control Power Supply System

The Instrumentation and Control Power Supply System does not perform any safety-related function. Figure 8.1-6 shows the overall Instrumentation and Control Power Supply System.

Regulating step-down transformers provide 208/120 VAC power to nonsafety-related I&C loads that do not require uninterruptible power. The nonsafety-related Instrumentation and Control buses are each supplied independently from 480 VAC Bus C2, which is in turn fed from the DCIS Swing Bus.

8.3.1.1.5 Safety-Related Electric Equipment Considerations

The following guidelines are utilized for safety-related equipment.

Physical Separation and Independence:

- Electrical equipment is separated in accordance with IEEE Standard 384, Regulatory Guide 1.75 and General Design Criterion 17.
- To meet the provisions of Policy Issue SECY-89-013, which relates to fire tolerance, 3 hour rated fire barriers are provided between areas of different safety-related divisions throughout the plant except in the primary containment and the control room complex. Refer to Subsection 9.5.1 for a description of how the provisions of the policy issue are met.
- The overall design objective is to locate the divisional equipment and its associated control, instrumentation, electrical supporting systems, and interconnecting cabling such

that separation is maintained between all divisions. Redundant divisions of electric equipment and cabling are located in separate rooms or fire areas wherever possible.

- Electric equipment and wiring for the safety-related systems which are segregated into separate divisions are separated so that no design basis event is capable of disabling more than one division of any Engineered Safety Feature (ESF).
- The safety-related electrical equipment (batteries, distribution panels, etc.) are located in separate seismic Category I rooms in the reactor building to ensure electrical and physical separation among the divisions. Separation is provided between divisional cables being routed between various equipment rooms, the main control room, containment, and other processing areas. Separation of safety-related equipment in these areas is achieved by separate safety-related structures, barriers, or a combination thereof. The equipment is located to facilitate divisional separation of cable trays and to provide access to electrical penetration assemblies. Exceptions to this separation objective are identified and analyzed as to equivalency and acceptability in the fire hazard analysis. (See Section 9A.6 Special Cases.) For separation requirements relating to the main control room and relay panels, refer to "Main Control Room and Relay Panels" in Subsection 8.3.1.4.
- For separation requirements relating to the wiring and components within control, relay, and instrument panels/racks, refer to "Control, Relay, and Instrument Panels/Racks" in Subsection 8.3.1.4
- For additional separation requirements relating to RPS and ESF systems refer to "System Separation Requirements" in Subsection 8.3.1.4. Containment electrical penetrations are dispersed around the periphery of the containment and are physically separated in accordance with the requirements of Section 6.5 of IEEE 384 (Reference 8.3-10). Each penetration carries circuits of a single voltage class and division. Penetrations serving safety-related loads are not used for nonsafety-related circuits and are only used for circuits belonging to the same safety-related division.
- Wiring for all safety-related equipment indicating lights is an integral part of the safety-related cables used for control of the same equipment and are considered to be safety-related circuits.

Class 1E Electric Equipment Design Bases and Criteria:

- Plant design specifications for electrical equipment require such equipment be capable of continuous operation with equipment terminal voltage fluctuations of plus or minus 10% of rated voltage.
- Power sources, distribution systems, and branch circuits are designed to maintain voltage and frequency within acceptable limits.
- Interrupting capacity of distribution panels is at least equal to the maximum available fault current to which it is exposed under all modes of operation. Circuit breaker and applications are in accordance with ANSI Standards.
- Refurbished circuit breakers are not used in either safety-related or nonsafety-related circuitry of the ESBWR design. New circuit breakers are specified in all ESBWR

purchase specifications. (NRC Bulletin No. 88-10 and NRC Information Notice No. 88-46 identify problems with defective refurbished circuit breakers.)

Testing:

The design provides for periodically testing the chain of system elements from sensing devices through actuated equipment to ensure that safety-related equipment is functioning in accordance with design requirements, and to ensure that the requirements of Regulatory Guide 1.118 and IEEE 338 (Reference 8.3-37) are met.

8.3.1.1.6 Circuit Protection

Philosophy of Protection

Simplicity of load grouping facilitates the use of conventional, protective relaying practices for isolation of faults. Emphasis has been placed on preserving function and limiting loss of safety-related equipment function in situations of power loss or equipment failure.

Protective relay schemes and direct acting trip devices are provided throughout the onsite power system to:

- Isolate faulted equipment and/or circuits from the power system;
- Prevent damage to equipment;
- Protect personnel;
- Minimize system disturbances; and
- Maintain continuity of the power supply.

Grounding

The ESBWR grounding complies with guidelines provided in Section 8A.1.

Bus Protection

Bus protection for nonsafety-related and safety-related buses are as follows:

- The 13.8 kV and 6.9 kV bus incoming circuit breakers have inverse-time overload, ground fault, undervoltage, and degraded voltage protection;
- The 13.8 kV and 6.9 kV feeder breakers for power centers have instantaneous, inverse-time overload and ground fault protection;
- The 13.8 kV and 6.9 kV motor feeder breakers have instantaneous, inverse-time overload and ground fault protection;
- The 13.8 kV and 6.9 kV buses have bus differential protection;
- The 480V feeder breakers for MCC buses have long-time and short-time overload and ground fault protection;
- The 480V Isolation Power Center buses have inverse-time overload and ground fault protection. In addition, loss of voltage, degraded voltage and under-frequency relay protective functions are provided which isolate these buses from the nonsafety-related system upon degraded source conditions;

- The 480V MCC loads (nonsafety-related only, there are no safety-related 480 VAC MCC loads) have instantaneous and inverse time overload protection; and
- The 480V power center motor feeder breakers have instantaneous, inverse-time overload and ground fault protection.

Protection Requirements

When the standby onsite AC power sources are called upon to operate, all the protective relay functions identified in "Protection Systems" (Subsection 8.3.1.1.8) are available.

8.3.1.1.7 Load Shedding and Sequencing on PIP Buses

Load shedding, bus transfer and sequencing on the 6.9 kV PIP buses is initiated on loss of bus voltage. Loss of Normal Preferred Power may cause load shedding and sequencing with an auto transfer to Alternate Preferred Power. If Alternate Preferred Power is not sensed by protective relaying, power is supplied by the appropriate onsite standby diesel power source.

PIP bus ready-to-load signals are generated by the diesel generator protective relaying logic and control system for the medium voltage distribution system.

Diesel Generators are sized conservatively to accommodate expected loads to be served by them with an acceptable starting sequence.

LOPP

The 6.9 kV PIP buses are normally energized from the normal preferred power supply. When the normal preferred power supply is lost, an auto transfer from the normal preferred power supply to the alternate preferred power supply is initiated.

Should the normal and alternate preferred power supplies protective relaying sense loss of power, the incoming PIP buses feeder breakers trip. Medium voltage motor breakers are tripped and low voltage motor starters are opened due to undervoltage. A standard dead bus transfer is automatically initiated to the standby onsite AC power source. The signal starts the standby onsite AC power source, and closes the standby power supply breaker after the standby onsite AC power source has returned a ready to load signal (that is, voltage and frequency are within normal limits and no lockout exists, and the normal and alternate preferred supply breakers are open). After bus voltage has been reestablished, loads are sequentially energized as required. Transfer back to the preferred power source is a synchronized closure of the feeder breaker by manual action to the selected source.

Loss-of-Coolant Accident (LOCA)

When a LOCA occurs without a LOPP there is no effect on the electrical distribution system. The plant remains on either source of preferred power and the onsite diesel-generator is not started. The load shed and sequence timers are not activated.

LOPP Following LOCA

If the bus voltage (normal and alternate preferred power) is lost during post-accident operation, transfer to the standby onsite AC power source occurs as described in LOPP, above.

LOCA Following LOPP

If a LOCA occurs following loss of both the normal and alternate preferred power supplies, the standby onsite AC power source should have already started from low bus voltage. Automatic load sequencing shall have started as described in LOPP, above.

LOCA When the Standby Onsite AC Power Source is Parallel to the Power Source During Testing

If a LOCA occurs when the standby diesel-generator is paralleled with either the normal preferred power or the alternate preferred power source, the standby diesel-generator automatically disconnects from the 6.9 kV PIP bus regardless of whether the test is being conducted from the local control panel or the main control room.

Loss of Normal Preferred Power Source During Standby Onsite Power Source Paralleling Test

If the normal preferred power supply is lost during the standby onsite AC power source paralleling test, the normal preferred power supply breaker and diesel generator breaker are automatically tripped and the alternate preferred power source accepts loads to re-energize the selected bus loads. Transfer back to the normal preferred power supply may then be accomplished manually.

Loss of Alternate Preferred Power Source During Standby Onsite Power Source Paralleling Test

If the alternate preferred supply is used for load testing the standby onsite AC power source, and the alternate preferred source is lost, the alternate preferred power supply breaker and diesel-generator breaker are automatically tripped and the affected bus may then be transferred back to the normal preferred power supply manually.

Restoration of Offsite Power

Upon restoration of offsite power, the 6.9 kV PIP buses can be transferred back to the offsite source by manual operation only, as described above in LOPP.

8.3.1.1.8 Standby Onsite AC Power Supply System

The standby AC power supply system is not within the ESBWR Design Bases, is not relied upon to perform any safety-related function or achieve safe shutdown, and thus, is classified as nonsafety-related. It includes the standby onsite AC power sources and associated power supply circuits up to the source breakers of the onsite PIP buses to which they are connected.

The standby onsite AC power sources consist of the prime movers and AC generators, the auxiliary systems (starting, lubrication, cooling, fuel supply, excitation, etc.), the fuel storage and transfer systems and the associated local instrumentation and control systems. (Refer to Subsections 9.5.4, 9.5.5, 9.5.6, 9.5.7, 9.5.8, and 9.4.7.)

The onsite standby AC power supply system is designed to supply backup AC power to the PIP nonsafety-related buses when the normal and alternate preferred power supplies are not available. The PIP buses provide power for various auxiliary and investment protection load groups, and Isolation Power Centers. Operation of the system is not required to ensure safe shutdown.

Figure 8.1-1 shows the interface between the normal preferred power sources, alternate preferred power sources, and the standby onsite AC power sources.

Redundant (non-safety) Standby AC Power Supplies

Each standby power system load group, including the standby diesel-generator, its auxiliary systems, and the distribution of power through the 6.9 kV and lower voltage PIP buses to various investment protection load groups, is segregated and separated from the redundant load group. No interconnection is provided between the redundant standby power system load groups. Each standby onsite AC power source is operated independently of the other standby onsite AC power source and is connected to the utility power system by manual control during testing.

Ratings and Capability

Each of the standby onsite AC power sources is sized to serve its nonsafety-related load and conforms to the following criteria:

- Each standby onsite AC power source is capable of starting, accelerating, and supplying its loads in the sequence necessary for plant investment protection.
- Each standby onsite AC power source is capable of starting, accelerating, and supplying its loads in their proper sequence without exceeding an acceptable voltage limit at its output terminals.
- Each standby onsite AC power source is capable of reaching full speed and voltage within 1 minute after receiving a signal to start, and is capable of being fully loaded within an acceptable time that does not challenge the diesel generator capacity.
- Each standby onsite AC power source has a continuous power rating greater than the sum of its PIP loads and battery chargers that could be powered concurrently during hot standby, normal plant cool down, or plant outages.
- The generator exciter and voltage regulator systems are capable of providing full voltage control during operating conditions including expected transients.

Starting Circuits and Systems

The standby onsite AC power sources start automatically upon loss of AC power. Undervoltage relays initiate the sequence used to start each standby onsite AC power source.

Upon loss of preferred AC power (normal and alternate) to the PIP buses, the transfer of these buses to the standby onsite AC power sources is automatic. After the breakers connecting the buses to the normal preferred power supply (or alternate preferred power supply, depending upon system configuration) are opened and when the required standby onsite AC power source generator voltage and frequency are established, the standby onsite AC power source breaker is closed.

Automatic Shedding, Loading and Isolation

The standby onsite AC power source is connected to its PIP bus only when the incoming normal preferred and/or alternate preferred source breakers have been tripped, except during parallel load testing using the normal or alternate preferred power sources. (See Subsection 8.3.1.1.7.)

Protection Systems For Diesel Generators

The onsite standby generator is shut down and the generator breaker tripped under the following conditions during all modes of operation and testing:

- Generator overspeed trip;
- Reverse power relay trip;
- Field relay trip;
- Overcurrent relay trip;
- Overvoltage relay trip;
- Ground relay trip;
- Over temperature relay trip;
- Undervoltage relay trip;
- Frequency relay trip; and
- Generator differential relay trip.

These protective functions of the standby onsite AC power source or the generator breaker and other off-normal conditions are alarmed and/or indicated in the main control room. (See Table 8.3-1.)

Local and Remote Control

Each standby onsite AC power source is capable of being started or stopped manually from the main control room. Start/stop control and bus transfer control may be transferred to a local control station in the standby onsite AC power source room by operator action.

Engine Mechanical Systems and Accessories

Descriptions of these systems and accessories are given in Section 9.5.

Interlocks and Testability

Each standby onsite AC power source, when operating other than in parallel loading, is totally independent of the preferred power supply. Additional interlocks to the LOPP sensing circuits terminate parallel operation testing as described in Subsection 8.3.1.1.7. A lockout or maintenance mode removes the standby onsite AC power source from service. The inoperable status is indicated in the control room.

8.3.1.2 Analysis

8.3.1.2.1 General Design Criteria and Regulatory Guidance Compliance

The following paragraphs analyze compliance with Nuclear Regulatory Commission (NRC) General Design Criteria (GDC), NRC Regulatory Guides and other criteria consistent with the Standard Review Plan (SRP).

Table 8.1-1 identifies the onsite power system and applicability of the associated codes and standards applied in accordance with Table 8-1 of the SRP. All regulatory guides, BTPs and NUREGs are discussed in Subsection 8.1.5.2.4, where GDC compliance is evaluated.

GDC 2, Design Basis for Protection Against Natural Phenomena

GDC 4, Environmental and Dynamic Effects Design Bases

The requirements of the GDC 2 and 4 are met, in that all components of the safety-related power system are housed in seismic Category I structures designed to protect them from natural phenomena. These components have been qualified to the appropriate seismic, hydrodynamic, and environmental conditions as described in Chapter 3.

GDC 17, Electric Power Systems

Safety-related DC power sources are provided to support passive core cooling and containment safety-related functions. No offsite or diesel-generator-derived AC power is required for 72 hours after an abnormal event. However, the ESBWR standard design complies with GDC 17 with respect to two independent and separate offsite power sources and standby onsite power sources.

GDC 18, Inspection and Testing of Electric Power Systems

Safety-related DC power sources are provided to support passive core cooling and containment safety-related functions. No offsite or diesel-generator-derived AC power is required for 72 hours after an abnormal event. However, the nonsafety-related offsite and onsite AC systems that supply AC power to the Isolation Power Centers are testable and meet GDC 18 requirements.

The safety-related DC power system (including safety-related UPS and 480 VAC Isolation Power Centers) is designed to permit the following:

- During divisional equipment shutdown occurring during plant operation, periodic inspection and testing of wiring, insulation, connections, and the condition of components;
- During normal plant operation, periodic testing of the operability and functional performance of onsite power supplies, circuit breakers, and their associated control circuits, relays, and buses; and
- During plant shutdown, testing of the operability of the safety-related system as a whole. The full operational sequence that brings the system into operation, including operation of signals of the safety-related systems and the transfer of power between offsite and onsite power system, are able to be tested, under conditions as close to design as practicable.

GDC 50, Containment Design Basis

GDC 50, as it relates to the design of circuits using containment electrical penetration assemblies, is met as indicated in Subsection 8.1.5.2.4.

8.3.1.2.2 Quality Assurance Requirements

The Quality Assurance program is provided in Chapter 17. This program includes a comprehensive system to ensure that the purchased material, manufacture, fabrication, testing, and quality control of the equipment conforms to the GE Quality Assurance program. The administrative responsibility and control provided are also described in Chapter 17.

These Quality Assurance requirements include an appropriate vendor quality assurance program and organization, purchaser surveillance as required, vendor preparation and maintenance of appropriate test and inspection records, certificates and other quality assurance documentation, and vendor submittal of quality control records considered necessary for purchaser retention to verify quality of completed work.

A necessary condition for receipt, installation and placing of equipment in service is the citing and auditing of Quality Assurance/Quality Control (QA/QC) verification data and the placing of this data in permanent onsite storage files.

8.3.1.2.3 Environmental Considerations

In addition to the effects of operation in a normal service environment, all safety-related equipment is designed to operate during and after any design basis event, in the area in which it is located. All safety-related electric equipment in a harsh environment is qualified to IEEE 323. Detailed information on all safety-related equipment that must operate in a harsh environment during and/or subsequent to an accident is provided in Section 3.11.

8.3.1.3 Physical Identification of Safety-Related Equipment

8.3.1.3.1 Power, Instrumentation and Control Systems

Electrical and control equipment, panels and racks, and cables and raceways grouped into separate divisions are identified so that their electrical divisional assignment is apparent, and so that an observer can visually differentiate between safety-related equipment and wiring of different divisions, and between safety-related and nonsafety-related equipment and wiring. The identification method is color-coding. All markers within a division have the same color. The ESBWR standard plant design eliminates safety-related associated circuits as defined by IEEE 384 and in accordance with RG 1.75. Divisional separation requirements of individual pieces of hardware are shown in the system elementary diagrams. Identification of raceways, cables, etc., is compatible with the identification of the safety-related equipment with which it interfaces. Location of the identification is such that points of change of circuit classification (at isolation devices, etc.) are readily apparent.

Equipment Identification

Equipment (panels, racks, junction or pull boxes) of each division of the safety-related electric system are identified as follows:

- The background nameplate for the equipment of a division has the same color as the cable jacket markers and raceway markers associated with that division.
- Power system distribution equipment (for example, power centers, transformers, distribution panels, batteries, chargers) is tagged with an equipment number the same as indicated on the single-line diagrams.

Cable Identification

All cables are tagged at their terminations with a unique identifying number (cable number), in addition to the marking characteristics shown below.

All safety-related cables are marked with sufficient durability to be legible to facilitate initial verification that the installation is in conformance with the separation criteria.

Such markings are colored to uniquely identify the division (or non-division) of the cable. Within cabinets or panels with circuits of more than one division, individual conductors are color-coded or color-tagged so that the division they belong to is clearly discernible. Any non-divisional cable within such cabinets is appropriately marked to distinguish it from the divisional cables.

To distinguish the neutron monitoring and scram solenoid cables from other cable types, unique voltage class designations are used in the cable routing program.

Raceway Identification

All conduit is similarly tagged with a unique conduit number, at discontinuities, at pull boxes, at points of entrance and exit to rooms, and at origin and destination of equipment. Conduits containing cables operating at voltages above 600V (that is, 6.9 kV) are also tagged to indicate the operating voltage. These markings are applied prior to the installation of the cables.

All safety-related cable trays are marked with the division color, and with their raceway identification on straight sections, at turning points and at points of entry and exit of enclosed areas. Cable trays are marked prior to the installation of cables.

Neutron monitoring cables, local power range monitor cables and startup range neutron monitor cables are run in their own divisional conduits and cable trays, separate from all other power, instrumentation and control cables. Scram solenoid cables are run in a separate conduit for each rod scram group.

Redundant safety-related equipment and circuits, assigned to redundant safety-related divisions, are readily distinguishable from each other and nonsafety-related system equipment and circuits without consulting reference materials. This is accomplished by color-coding of equipment, nameplates, cables, and raceways, as described above.

8.3.1.4 Independence of Redundant Systems

8.3.1.4.1 Power Systems

The safety-related onsite electric power systems and major components of the separate power divisions are shown in Figures 8.1-3 and 8.1-4.

Independence of the electric equipment and raceway systems, between the different divisions, is maintained primarily by firewall-type separation, where feasible, and by spatial separation, in accordance with criteria given within this subsection, “Safety-Related Electric Equipment Arrangement.” Exceptions are analyzed in Appendix 9A.6.4, “Fire Separation for Divisional Electrical Systems”.

Where spatial separation cannot be maintained in hazardous areas (for example, potential missile areas), physical isolation between electrical equipment of different divisions is achieved by use of a protective barrier designed to withstand the effects of postulated hazards.

The physical independence of electric power systems complies with the requirements of IEEE Standard 384, GDC 17, and NRC Regulatory Guide 1.75.

Safety-Related Electric Equipment Arrangement

Safety-related electric equipment and wiring are segregated into separate divisions so that no single credible event is capable of disabling enough equipment to hinder reactor shutdown, removal of decay heat from the core, or isolation of the containment in the event of an accident. Separation requirements are applied to control power and motive power for all systems involved.

Equipment arrangement and/or protective barriers are provided such that no locally generated force or missile can destroy any redundant RPS, Nuclear Steam Supply Systems (NSSS), ESF, or ECCS functions.

Routing of wiring/cabling is arranged such as to eliminate, to the extent practical, all potential for fire damage to cables and to separate the redundant divisions so that fire in one division does not propagate to another division.

An independent raceway system is provided for each division of the safety-related electric system. The raceways are arranged, physically, top to bottom based on the function and the voltage class of the cables.

Electric Cable Installation

Cable derating and cable tray fill — Base ampacity rating of cables is established as described in Subsection 8.3.3.2. Cables are installed in trays in accordance with their voltage ratings and as described in this Subsection. Tray fill is as established in Subsection 8.3.3.2.

Cable routing in potentially harsh environmental areas — Circuits of different safety-related divisions that are routed through the same potentially harsh environmental area are protected through separation by conduit and by qualifications described in Subsection 8.3.3.2.

Sharing of cable trays — Each division of safety-related AC and DC system cables is provided with its own independent and separate raceway system.

Cable fire protection and detection — For details of cable fire protection and detection, refer to Section 9A.5, Subsections 8.3.3 and 9.5.1.

Cable and raceway markings — All cables are tagged at their terminations with a unique identifying number. The marking of cables and raceways for divisional identification is discussed in Subsection 8.3.1.3.

Spacing of wiring and components in control boards, panels and relay racks — Separation is accomplished by mounting the redundant devices or other components on physically separated control boards. When human factors engineering dictates that redundant equipment be in close proximity, separation is achieved by a barrier or enclosure to retard internal fire or by a maintained air space in accordance with criteria given in this subsection, "Safety-Related Electric Equipment Arrangement."

In this case, redundant circuits, which serve the same safety-related function, enter the control panel through separated apertures and terminate on separate and separated terminal blocks. Where redundant circuits unavoidably terminate on the same device, barriers are provided between the device terminations to ensure circuit separation.

Primary containment electrical penetration assemblies — Electric penetration assemblies of different safety-related divisions are separated by 3-hour rated fire barriers, separate rooms and/or locations on separate floor levels. Separation by distance without barriers is allowed only in the inerted containment. Separation between divisional and non-divisional penetrations is in accordance with IEEE 384. Grouping of circuits in penetration assemblies follows the same raceway voltage groupings as described in this subsection.

Redundant overcurrent interrupting devices are provided for electrical circuits routed through containment penetrations if the maximum available fault current (including failure of upstream devices) is greater than the continuous rating of the penetration. This avoids penetration damage in the event of failure of any single overcurrent device to clear a fault within the penetration or beyond it.

Control of Compliance with Separation Criteria During Design and Installation

The equipment nomenclature used on the ESBWR standard design is one of the primary mechanisms for ensuring proper separation. Each equipment and/or assembly of equipment carries a single number (e.g., the item numbers for motor drivers are the same as the machinery driven). Based on these identification numbers, each item can be identified as safety-related or nonsafety-related, and each safety-related item can further be identified to its division. This is carried through and dictates appropriate treatment at the design level during preparation of the detailed design drawings. Nonsafety-related equipment is separated where desired to enhance power generation reliability and availability.

Once the safety-related equipment has been identified within a safety-related division, the divisional assignment dictates a characteristic color (Subsection 8.3.1.3) for positive visual identification. Likewise, the divisional identification of all equipment, cable and raceways matches the divisional assignment of the system it supports.

Independence of Redundant Safety-Related Instrumentation and Control Systems

This subsection defines independence criteria applied to safety-related electrical systems and instrumentation and control equipment. Safety-related systems to which the criteria apply are those necessary to mitigate the effects of anticipated and abnormal operational transients or Design Basis Accidents. This includes safety-related systems and functions enumerated in Chapter 7. The term “systems” includes the overall complex of actuated equipment, actuation devices (actuators), logic, instrument channels, controls, and interconnecting cables that are required to perform system safety-related functions. The criteria outline the separation requirements necessary to achieve independence of safety-related functions compatible with the redundant and/or diverse equipment provided and postulated events.

General

Separation of the equipment for the safety-related systems referred to in Chapter 7 is accomplished so that they are in compliance with IEEE 603 (Reference 8.3-33), 10 CFR 50 Appendix A, GDC 17, and NRC Regulatory Guides 1.75 (IEEE 384) and 1.53 (IEEE 379).

Independence of mutually redundant and/or diverse safety-related equipment, devices, and cables is achieved by spacial separation, barriers, and electrical isolation. This protection is provided to maintain the independence of safety-related circuits and equipment so that the protective function required during and following a design basis event, including a single fire anywhere in the plant or a single active failure in any circuit or equipment, with one unaffected division out of service, can be accomplished with the remaining two divisions.

Separation Techniques

The methods used to protect redundant safety-related systems from results of single active failures or events are utilization of safety-related structures, spatial separation, 3-hour rated fire barriers, and isolation devices.

Safety-Related Structures — The basic design consideration in plant layout is that redundant circuits and equipment are located in separate safety-related areas and fire areas to the extent possible. The separation of safety-related circuits and equipment is such that the required independence is not compromised by the failure of mechanical systems served by the safety-related electrical system. For example, safety-related circuits are routed or protected so that failure of related mechanical equipment of one system cannot disable safety-related circuits or equipment essential to the operation of a redundant system.

Spatial Separation and/or Protective Barriers — Spatial (distance) separation and/or protective barriers are such that no locally generated force or missile resulting from a Design Basis Accident (DBA) or from random failure of equipment can disable a redundant safety-related function. Separation in all safety-related equipment and cable areas meets or exceeds the requirements of IEEE 384.

Main Control Room Panels — The protection system and safety-related control, logic, and instrument panels/racks are located in a safety-related structure in which there are no potential sources of missiles or pipe breaks that could jeopardize redundant cabinets and raceways.

Control, Relay, and Instrument Panels/Racks — Control, relay, and instrument panels/racks are designed in accordance with the following general criteria to preclude failure of nonsafety-related circuits causing failure of any safety-related circuit, and to preclude failure of any safety-related circuit causing failure of its redundant safety-related circuit. Single panels or instrument racks do not contain circuits or devices of the redundant safety-related protection system or nonsafety-related systems except:

(1) Human factors engineering may require certain operator interface control panels to have human factors considerations that dictate that redundant protection system or safety-related system circuits or devices be located in a single panel. These circuits and devices are separated horizontally and vertically by the minimum distance required in IEEE 384 Subsection 6.6.2, or by steel barriers or enclosures.

(2) Safety-related circuits and devices are also separated from the nonsafety-related circuits and devices that are present inside a panel. These circuits and devices are separated from each other horizontally and vertically by the minimum distance required in IEEE 384 Subsection 6.6.2, or by steel barriers or enclosures.

(3) Where electrical interfaces between safety-related and nonsafety-related circuits or between safety-related circuits of different divisions cannot be avoided, safety-related isolation devices are used (see "Isolation Devices," below).

(4) If two panels containing circuits of different safety-related divisions are less than 91.5 cm (3 ft) apart, there is a steel barrier between the two panels. Panel ends closed by steel end plates are considered to be acceptable barriers provided that terminal boards and wire ways are spaced a minimum of 2.5 cm (1 inch) from the end plate.

(5) Penetration of separation barriers within a subdivided panel is permitted, provided such penetrations are sealed or otherwise treated so that fire generated by an electrical fault could not reasonably propagate from one section to the other and disable a protective function.

(6) If two or more safety-related divisions of fiber optic cable are brought to a fiber bypass switch, separation is not necessary in the immediate vicinity of the switch.

Isolation Devices — Where electrical interfaces between safety-related and nonsafety-related circuits or between safety-related circuits of different divisions cannot be avoided, safety-related isolation devices are used. Isolation is provided by the isolation devices defined in IEEE 384 Section 7.

Wiring from safety-related equipment or circuits which interface with nonsafety-related equipment circuits (that is, annunciators or data loggers) is safety-related and retains its divisional identification and separation up to and including its isolation device (usually fiber optic). The output circuits from this isolation device are classified as nonsafety-related and are physically separated from the safety-related wiring.

System Separation Requirements

The separation requirements pertaining to the RPS and other safety-related systems are given in the following subsections.

Reactor Protection (Trip) System (RPS) — The following separation requirements apply to the RPS wiring:

(1) RPS sensors, sensor input circuit wiring, trip channels, and trip logic equipment are arranged in four functionally independent and divisionally separate groups designated Divisions 1, 2, 3 and 4. The trip channel wiring associated with the sensor input signals for each of the four divisions provides inputs to divisional logic cabinets which are in the same divisional group as the sensors and trip channels and which are functionally independent and physically separated from the logic cabinets of the redundant divisions.

(2) Where trip channel data originating from sensors of one division are required for coincident trip logic circuits in other divisions, safety-related isolation devices are used as interface elements for signals sent from one division to another such as to maintain electrical isolation between divisions.

(3) Sensor wiring for several trip variables associated with the trip channels of one division may be run together in the same conduits or in the same raceways of that division. Sensor wiring associated with one division is not routed with, or in close proximity to, any wiring or cabling associated with a redundant division.

(4) The scram solenoid circuits, from the actuation devices to the solenoids of the scram pilot valves of the CRD hydraulic control units, are run in grounded steel conduits, with no other wiring contained within the conduits, so that each scram group is protected against a hot short to any other wiring by a grounded enclosure. Short sections of flexible metallic conduit are permitted for making connections within panels and the connections to the solenoids.

(5) Separate grounded steel conduits are provided for the scram solenoid wiring for each of four scram groups. Separate grounded steel conduits are also provided for both the A solenoid wiring circuits and for the B solenoid wiring circuits of the same scram group.

(6) Scram solenoid conduits have a unique identification and are separately routed as Division 1 and 2 conduits for the A and B solenoids of the scram pilot valves, respectively. This corresponds to the divisional assignment of their power sources. The conduits containing the scram solenoid group wiring of any one scram group are also physically separated by a minimum separation distance of 2.5 cm (1 in.) from the conduits of any other scram group, and from raceways which contain either divisional or nonsafety-related circuits. The RPS conduits containing the scram group wiring for the A and B solenoids of the scram pilot valves (associated with Divisions 1 and 2, respectively) are separated from non-enclosed raceways associated with any of the four electrical divisions or non-divisional cables in accordance with IEEE 384 and Regulatory Guide 1.75.

(7) Any scram group conduit may be routed alongside any cable or raceway containing either safety-related circuits (of any division), or any cable or raceway containing nonsafety-related circuits, as long as the conduit itself is not within the boundary of any raceway which contains either the divisional or the nonsafety-related circuits and is physically separated from said cables and raceway boundaries as stated in item (6) above.

(8) The Startup Range Neutron Monitoring (SRNM) subsystem cabling of the Neutron Monitoring System (NMS) cabling under the vessel is treated as divisional. The SRNM cables are assigned to Divisions 1, 2, 3 and 4. Under the vessel, cables are enclosed as described in Subsection 9A.6.4.

Other Safety-Related Systems

(1) Separation of redundant systems or portions of a system is such that no single active failure can prevent initiation and completion of a safety-related function.

(2) The Standby Liquid Control system redundant safety-related controls are run so that no failure of standby liquid control function results from any single electrical failure.

(3) Inboard and outboard isolation valves are redundant to each other so they are made independent of and protected from each other to the extent that no single active failure can prevent the operation of at least one of an inboard/outboard pair.

(4) Isolation valve circuits require special attention because of their function in limiting the consequences of a pipe break outside the primary containment. Isolation valve control and power circuits are required to be protected from the pipe lines that they are responsible for isolating.

Safety-related isolation valve wiring in the vicinity of the outboard (downstream) valve is installed in conduits and routed to take advantage of the mechanical protection afforded by

the valve operator or other available structural barriers not susceptible to disabling damage from the pipe line break. Additional mechanical protection (barriers) is placed as necessary between wiring and potential sources of disabling mechanical damage consequential to a break downstream of the outboard valve.

(5) Automatic Depressurization System (ADS) and Gravity Driven Cooling System (GDCS) comprising the ECCS have their various sensors, logics, actuating devices and power supplies assigned to safety-related divisions, so that no single active failure can disable a redundant ECCS function.

a. The wiring to the ADS solenoid valves within the drywell is run in rigid conduits. The conduits for ADS solenoids are divisionally separated from other ADS solenoid conduits and contain no other cable. Short lengths of flexible conduit are used to make the final raceway connection to the ADS valve solenoids.

b. The wiring for ADS depressurization valve squibs is run in rigid conduits. The conduits are divisionally separated and contain only cable(s) associated with one division of power. Short lengths of flexible conduit are used to make the final raceway connection to the depressurization valve squibs.

c. The wiring to the GDCS valve squibs is run in rigid conduits. The conduits are divisionally separated and contain only cable(s) associated with the valve squibs. Short lengths of flexible conduit are used to make the final raceway connection to the GDCS valve squibs.

(6) Electrical equipment and raceways for safety-related systems are either not located in close proximity to primary steam piping (steam leakage zone), or designed for short-term exposure to the high temperature and humidity associated with a steam leak.

(7) Safety-related electrical equipment located in the suppression pool level swell zone is limited to the suppression pool temperature monitors, which have their terminations sealed such that operation would not be impaired by submersion caused by pool swell or LOCA. These devices are qualified to the requirements of IEEE 323 for the environment in which they are located.

(8) Containment penetrations are arranged so that no design basis event can disable cabling in more than one division. Penetrations do not contain cables of more than one divisional assignment.

(9) Inputs from safety-related equipment or circuits are safety-related and retain their divisional identification up through their safety-related isolation device. The output circuit from this isolation device supports a nonsafety-related function.

8.3.2 DC Power Systems

8.3.2.1 Description

Completely independent safety-related and nonsafety-related DC power systems are provided. The safety-related DC system is shown in Figure 8.1-3. The nonsafety-related DC system is shown in Figure 8.1-2.

Eight independent safety-related 250 VDC systems are provided, two each for Divisions 1, 2, 3 and 4. They provide four divisions of independent and redundant onsite sources of power for operation of safety-related loads, monitoring and MCR emergency lighting.

Five independent nonsafety-related DC systems are provided consisting of three 250 VDC systems and two 125 VDC systems. The nonsafety-related DC systems supply power for control and switching, switchgear control, TSC, instrumentation, and station auxiliaries.

Battery cycle times are shown in Table 8.3-2.

8.3.2.1.1 Safety-Related Station Batteries and Battery Chargers

250V Safety-Related DC Systems Configuration

Figure 8.1-3 shows the overall 250 VDC system provided for safety-related Divisions 1, 2, 3 and 4. Divisions 1, 2, 3 and 4 consist of two separate batteries in each division. Each battery supplies power to its safety-related inverter for at least 72 hours following a design basis accident. The DC systems are operated ungrounded for increased reliability. Each of the safety-related battery systems has a 250 VDC battery, a battery charger, a main distribution panel, and a ground detection panel. One divisional battery charger is used to supply each group DC distribution panel bus and its associated battery. The divisional battery charger is fed from its divisional 480V Isolation Power Center. The main DC distribution bus feeds the UPS inverter. Each division has a standby charger to act as a backup to either of the batteries of that division.

The four safety-related divisions are supplied power from four independent Isolation Power Centers. The 250 VDC systems supply DC power to Divisions 1, 2, 3 and 4, respectively, and are designed as safety-related equipment in accordance with IEEE 308 (Reference 8.3-38) and IEEE 946 (Reference 8.3-1). The safety-related DC system is designed so that no single active failure in any division of the 250 VDC system results in conditions that prevent safe shutdown of the plant while a separate division has been taken out of service for maintenance.

The plant design and circuit layout of the DC systems provide physical separation of the equipment, cabling, and instrumentation essential to plant safety. Each 250 VDC battery is separately housed in a ventilated room apart from its charger, distribution, and ground detection panels. Equipment of each division of the DC distribution system is located in an area separated physically from the other divisions. All the components of safety-related 250 VDC systems are housed in Seismic Category I structures.

Safety-Related Batteries

In divisions 1, 2, 3, and 4, the two 250 volt safety-related batteries per division are each rated to exceed 72-hour station blackout conditions. The DC system minimum battery terminal voltage at the end of the discharge period is 210 VDC (1.75 volts per cell). The maximum equalizing charge voltage for safety-related batteries is 282 VDC (2.35 volts per cell) as specified by the battery vendor and allowed by the voltage rating of the connected loads (inverters). The UPS inverters are designed to supply 120 VAC power with DC input less than the minimum discharge voltage (210 VDC) and greater than the maximum equalizing charge voltage (282 VDC) specified by the battery vendor.

The safety-related batteries have sufficient stored capacity without their chargers to independently supply the safety-related loads continuously for the time periods stated above.

Each distribution circuit is capable of transmitting sufficient energy to operate all required loads in that circuit. Batteries are sized for the DC load in accordance with IEEE Standard 485 (Reference 8.3-2) with an expected 20-year service life. The battery banks are designed to permit the replacement of individual cells.

The safety-related batteries meet the qualification requirements of IEEE 535 (Reference 8.3-3), and are installed in accordance with IEEE 1187 (Reference 8.3-9).

Safety-Related Battery Chargers

The safety-related battery chargers are full wave, silicon-controlled rectifiers. The housings are freestanding, NEMA Type 1, and are ventilated. The chargers are suitable for float charging the batteries. The chargers operate from a 480 volt, 3 phase, 60 Hz supply. The power for each divisional battery charger is supplied by that division's dedicated Isolation Power Center. The standby battery charger is used to equalize either of its associated divisional batteries, or as a replacement to the normal charger associated with that battery.

Standby chargers are supplied from the same Isolation Power Center as the normal charger.

Each battery charger is capable of recharging its battery from the design minimum charge to a fully charged condition within 24 hours while supplying the full load associated with the individual battery.

The battery chargers are the constant voltage type, adjustable between 240 and 290 volts, with the capability of operating as battery eliminators. The battery eliminator feature is incorporated as a precautionary measure to protect against the effects of inadvertent disconnection of the battery. The battery chargers are designed to function properly and remain stable on the disconnection of the battery. Variation of the charger output voltage is less than ± 1 percent with or without the battery connected. The maximum output ripple for the charger is 30 millivolts RMS with the battery, and less than 2% RMS without the battery.

The battery charger's output is of a current limiting design. The battery chargers are designed to prevent their AC source from becoming a load on the batteries because of power feedback from loss of AC power. The battery charger's output voltage is protected against overvoltage by a high voltage shutdown circuit. The overvoltage protection feature is incorporated to protect equipment from damage caused by high voltage. When high voltage occurs, the unit disconnects the auxiliary voltage transformer, which results in charger shutdown. Loss of charger input voltage and charger shutdown is alarmed in the control room.

Ventilation

A safety-related ventilation system is not required for the batteries to perform their safety-related functions. However, battery rooms are ventilated by a system designed to remove the minor amounts of gas produced during the charging of batteries. The system is designed to preclude the possibility of hydrogen accumulation. (See Subsection 9.4.6).

Inspection, Maintenance, and Testing

An initial composite test of the onsite DC power systems is a prerequisite to initial fuel loading. This test verifies that each battery capacity is sufficient to satisfy a design basis load demand profile under the conditions of a LOCA and loss of preferred power. Battery capacity tests are

conducted in accordance with IEEE 1188 (Reference 8.3-8). These tests ensure that the battery has the capacity to meet safety-related load demands.

In-service tests, inspections, and resulting maintenance of the DC power systems including the batteries, chargers, and auxiliaries are specified in the ESBWR Technical Specifications that conform to IEEE 1188 and manufacturer recommendations.

Station Blackout

The station blackout scenario (defined in 10 CFR 50.63, Regulatory Guide 1.155 and Appendix B to SRP 8.2) includes the complete loss of all offsite and onsite AC power, but not the loss of available AC power buses fed by station batteries through inverters, as with the ESBWR. The ESBWR Design Bases rely upon battery power to achieve and maintain safe shutdown for 72 hours. The batteries are adequately sized for the station blackout loads. The station blackout safety analysis is provided in Subsection 15.5.5.

8.3.2.1.2 Nonsafety-Related Station Batteries and Battery Chargers

125V and 250V Nonsafety-Related DC Systems Configuration

Figure 8.1-2 shows the overall 125V and 250V nonsafety-related DC systems. The DC systems are operated ungrounded for increased reliability. Each of the DC systems has a battery, a battery charger, a standby battery charger, main DC distribution panel, and ground detection panel, except the 250 VDC load groups A and B. The A and B load groups each have two normal battery chargers, one standby battery charger, two batteries, a ground detection panel, and two DC distribution panels. The main DC distribution buses feed the local DC distribution panels, UPS inverter and/or DC motor control center.

The plant design and circuit layout of the nonsafety-related DC systems provide physical separation of the equipment, cabling and instrumentation associated with the load groups of nonsafety-related equipment. Each 125V and 250 VDC battery is separately housed in a ventilated room apart from its charger, distribution, and ground detection panels. Equipment of each load group of the DC distribution system is located in an area separated physically from the other load groups.

The nonsafety-related DC power is required for standby lighting, control and switching functions such as the control of the main generator circuit breaker, 13.8 kV, 6.9 kV and 480V switchgear, DC motors, control relays, meters and indicators.

Nonsafety-Related Batteries

The 125 volt nonsafety-related batteries are sized for 2-hour duty cycles at a discharge rate of 2 hours, based on a terminal voltage of 1.75 volts per cell. The DC system minimum battery terminal voltage at the end of the discharge period is 105 volts. The maximum equalizing charge voltage for 125V batteries is 141 VDC.

The 250 volt nonsafety-related batteries are sized for 2-hour duty cycles at a discharge rate of 2 hours, based on a terminal voltage of 1.75 volts per cell. The DC system minimum battery terminal voltage at the end of the discharge period is 210 volts. The maximum equalizing charge voltage for 250V batteries is 282 VDC.

The nonsafety-related batteries have sufficient stored capacity without their chargers to independently supply their loads continuously for at least 2 hours. Each distribution circuit is capable of transmitting sufficient energy to start and operate all required loads in that circuit.

The batteries are sized so that the sum of the required loads does not exceed the battery ampere-hour rating, or warranted capacity at end-of-installed-life with 100% design demand. The battery banks are designed to permit replacement of individual cells .

Nonsafety-Related Battery Chargers

The nonsafety-related battery chargers are full wave, silicon-controlled rectifiers or an acceptable alternate design. The housings are freestanding, NEMA Type 1, and are ventilated. The chargers are suitable for float charging the batteries. The chargers operate from a 480 volt, 3 phase, 60 Hz supply. Each normal charger is supplied from a separate power center than its standby charger, and is backed by the standby diesel-generator.

Standby chargers are used to equalize battery charging. Standby chargers are supplied from a different power center than the normal charger.

The battery chargers are the constant voltage type, with the 125 VDC system chargers having a voltage adjustable between 120 and 145 volts and the 250 VDC system chargers having a voltage adjustable between 240 and 290 VDC, with the capability of operating as battery eliminators. The battery eliminator feature is incorporated as a precautionary measure to protect against the effects of inadvertent disconnection of the battery. The battery chargers are designed to function properly and remain stable on the disconnection of the battery. Variation of the charger output voltage is less than ± 1 percent with or without the battery connected.

The battery charger's output is of a current limiting design. The battery chargers are designed to prevent their AC source from becoming a load on the batteries caused by power feedback from a loss of AC power. The battery charger's output voltage is protected against overvoltage by a high voltage shutdown circuit. The overvoltage protection feature is incorporated to protect equipment from damage caused by high voltage. When high voltage occurs, the unit disconnects the auxiliary voltage transformer, which results in charger shutdown. Loss of charger input voltage and charger shutdown is alarmed in the control room.

Ventilation

Battery rooms are ventilated by a system designed to remove the minor amounts of gas produced during the charging of batteries. The system is designed to preclude the possibility of hydrogen accumulation. Refer to Subsection 9.4.6.

8.3.2.2 Analysis

8.3.2.2.1 Safety-Related DC Power Systems

The 480 VAC power supplies for the divisional battery chargers are from the individual Isolation Power Centers to which the particular 250 VDC system belongs (Figure 8.1-3). These Isolation Power Centers are fed directly from the PIP nonsafety-related buses, which are backed up by the standby diesel generators. In this way, separation between the independent systems is maintained and the AC power provided to the chargers can be from either preferred or standby AC power sources.

The DC system is arranged so that the probability of an internal system failure resulting in loss of that DC power system is extremely low. A ground detection system is employed for prompt detection of grounds. Important system components are either self-alarming on failure, or capable of clearing faults, or being tested during service to detect faults. Each battery set is located in its own ventilated battery room. All abnormal conditions of important system parameters such as system grounds, charger failure and low bus voltage are alarmed in the main control room and/or locally.

8.3.2.2.2 Regulatory Requirements and Guides

The following analyses demonstrate compliance of the safety-related Divisions 1, 2, 3 and 4 DC power systems to NRC GDC, NRC Regulatory Guides, and other criteria consistent with the SRP. The analyses establish the ability of the system to sustain credible single active failure with one division already out of service and the remaining two divisions retain their capacity to function for 72 hours before requiring recharge.

The following list of criteria is addressed in accordance with Table 8.1-1, which is based on Table 8-1 of the SRP. In general, the ESBWR is designed in accordance with all criteria. Any exceptions or clarifications are so noted.

GDC:

- GDC 2, 4, 17, 18 and 50 - The DC power system complies with these GDC, which are generically addressed in Subsection 8.1.5.2.4.

Regulatory Guides:

- Regulatory Guide 1.6, "Independence Between Redundant Standby (Onsite) Power Sources and Between Their Distribution Systems." The ESBWR Standard Plant does not need or have any safety-related standby AC power sources, therefore this Regulatory guide is not applicable to the ESBWR design (see Table 8.1-1). However, the ESBWR offsite and onsite nonsafety-related power sources do comply with independence and redundancy between their sources and distribution systems
- Regulatory Guide 1.32, "Criteria for Power Systems for Nuclear Power Plants." Safety-related DC power sources are provided to support passive core cooling and containment integrity safety functions. No offsite or diesel-generator-derived AC power is required for 72 hours.
- Regulatory Guide 1.47, "Bypassed and Inoperable Status Indication for Nuclear Power Plant Safety Systems."
- Regulatory Guide 1.53, "Application of the Single Failure Criteria to Safety Systems."
- Regulatory Guide 1.63, "Electric Penetration Assemblies in Containment Structures for Nuclear Power Plants."
- Regulatory Guide 1.75, "Criteria for Independence of Electrical Safety Systems." Safe shutdown relies only upon DC-derived power and meets the design requirements for physical independence.
- Regulatory Guide 1.106, "Thermal Overload Protection for Electrical Motors and Motor Operated Valves." The ESBWR does not require electric motors or motor operated

valves to perform any safety-related function, therefore this regulatory guide is not applicable.

- Regulatory Guide 1.118, "Periodic Testing of Electric Power and Protection Systems." (See Subsection 13.5.2 for Operating and Maintenance Procedures and Chapter 16 for Technical Specifications.)
- Regulatory Guide 1.128, "Installation Designs and Installation of Large Lead Storage Batteries for Nuclear Power Plants." The ESBWR Valve Regulated Lead Acid (VRLA) batteries limit the release of hydrogen to less than 1% while battery room temperature is within specified vendor limits during charging evolutions. IEEE 344, IEEE 323, and IEEE 1187 apply to VRLA batteries. IEEE 484 is not applicable for VRLA batteries.
- Regulatory Guide 1.129, "Maintenance, Testing, and Replacement of Large Lead Storage Batteries for Nuclear Power Plants." The ESBWR design allows for periodic testing, maintenance and replacement of batteries in accordance with IEEE 1188. IEEE 450 is not applicable for VRLA batteries.
- Regulatory Guide 1.153, "Criteria for Safety Systems."
- Regulatory Guide 1.155, "Station Blackout," The ESBWR uses battery power to achieve and maintain safe shutdown. Thus, the ESBWR meets the intent of Regulatory Guide 1.155. The Station Blackout evaluation is provided in Subsection 15.5.5.

Branch Technical Positions (BTPs):

- BTP ICSB 21, "Supplemental Guidance for Bypass and Inoperable Status Indication for Engineered Safety Features Systems."

The DC power system is designed consistent with this criterion.

Other SRP Criteria:

Consistent with Table 8-1 of the SRP, there are no other criteria applicable to DC power systems.

8.3.3 Fire Protection of Cable Systems

The basic concept of fire protection for the cable system in the ESBWR design is that it is incorporated into the design and installation rather than added onto the systems. Fire protection is built into the system by cable separation; by limiting cable tray fill; by limiting cable ampacity to levels that prevent overheating and insulation failures (and resultant possibility of fire); and by use of fire resistant and non-propagating cable insulation. Fire suppression systems (for example, automatic sprinkler systems) are provided as defined in Subsection 9.5.1.2. Further circuit analysis is provided in Section 9A.6.

8.3.3.1 Resistance of Cables to Combustion

The electrical cable insulation is designed to resist the onset of combustion by choice of insulation and jacket materials, which have flame-resistive and self-extinguishing characteristics. Polyvinyl chloride and neoprene cable insulation are not used in the ESBWR. Each power, control, and instrumentation cable is specified to pass the vertical tray flame test in accordance with IEEE 1202 (Reference 8.3-11). All cable trays are fabricated from noncombustible material.

8.3.3.2 Cables and Raceways

Power and control cables are specified for continuous operation at conductor temperature not exceeding 90°C (194°F) and to withstand an emergency overload temperature of up to 130°C (266°F) in accordance with ICEA S-95-658/NEMA WC-70 (Reference 8.3-5). The base ampacity rating of the cables is established as published in IEEE 835 (Reference 8.3-6) and ICEA P-54-440/NEMA WC-51 (Reference 8.3-7).

Cables are specified to continue to operate at 100% relative humidity with a service life expectancy of 60 years. Safety-related cables are designed to survive the LOCA ambient condition at the end of the 60-year life span. Certified proof tests are performed on cables to demonstrate 60-year life, and resistance to radiation, flame, and the environment. Refer to IEEE 383 (Reference 8.3-4) and ICEA S-95-658/NEMA WC-70 (Reference 8.3-5). The testing methodology ensures such attributes are acceptable for the 60-year life.

All cables specified for safety-related systems and circuits are moisture and radiation resistant, are highly flame resistant and evidence little corrosive effect when subjected to heat or flame, or both. Certified proof tests are performed on cable samples to:

- Certify 60-year life by thermal aging;
- Prove the radiation resistance by exposure of aged specimens to integrated dosage;
- Prove mechanical/electrical tests of cable for environmental conditions specified;
- Prove flame resistance by the vertical tray, 70,000 Btu/hr flame test for 20 minutes (minimum); and
- Show acceptable levels of gas evolution by an acid gas generation test.

Cable tray fill is limited to 40% of the cross-sectional area for trays containing power cables; and 50% cross-sectional area for trays containing control and instrumentation cables. If tray fill exceeds the above maximum fills, the tray fill is justified and documented.

Cable splices in raceways are prohibited. Cable splices are only made in manholes, boxes or suitable fittings. Splices in cables passing through the containment penetration assemblies are made in terminal boxes located adjacent to the penetration assembly. (See Regulatory Guide 1.75 for splice exception.)

The cable installation is such that direct impingement of fire suppressant does not prevent safe reactor shutdown.

8.3.3.3 Localization of Fires

In the event of a fire, the installation design localizes the physical effects of the fire by preventing its spread to adjacent areas or to adjacent raceways of different divisions. Floors and walls are effectively used to provide vertical and horizontal fire-resistive separations between redundant cable divisions. Localization of the effect of fires on the electric system is accomplished by independence and separation of redundant cable/raceway systems and equipment as described in Subsection 8.3.1.4.

Three hour fire rated concrete barriers are used between the RATs, the UATs and the main transformers and spare main transformer as described in Subsection 9A.4.7, "Yard", and includes containment/collection of transformer oil.

In any given fire area, equipment is typically from only one safety-related division. This design objective is not always met due to other overriding design requirements. IEEE 384 (Reference 8.3-10) and Regulatory Guide 1.75 are always complied with, however. In addition, an analysis is made and documented in Appendix 9A to ascertain that the requirement of being able to safely shut down the plant with complete burnout of the fire area without recovery of the equipment is met. The fire detection, fire suppression, and fire containment systems provided, as described in Appendix 9A, assure that a fire of this magnitude does not occur.

8.3.4 COL Information

None

8.3.5 References

8.3-1 IEEE 946, "Recommended Practice for the Design of DC Auxiliary Power Systems for Generating Stations."

8.3-2 IEEE 485, "Recommended Practice for Sizing Lead-Acid Batteries for Stationary Applications."

8.3-3 IEEE 535, "Standard for Qualification of Class 1E Lead Storage Batteries for Nuclear Power Generating Stations."

8.3-4 IEEE 383, "Standard for Qualifying Class 1E Electric Cables and Field Splices for Nuclear Power Generating Stations."

8.3-5 ICEA S-95-658/NEMA WC-70, "Nonshielded 0-2kV Cables."

8.3-6 IEEE 835, "Standard Power Cable Ampacity Tables."

8.3-7 ICEA P-54-440/NEMA WC-51, "Ampacities of Cables in Open-top Cable Trays."

8.3-8 IEEE 1188, "Recommended Practice for Maintenance, Testing, and Replacement of Valve-Regulated Lead-Acid (VRLA) Batteries for Stationary Applications."

8.3-9 IEEE 1187, "Recommended Practice for Installation Design and Installation of Valve-Regulated Lead-Acid Storage Batteries for Stationary Applications."

8.3-10 IEEE 384, "Standard Criteria for Independence of Class 1E Equipment and Circuits."

8.3-11 IEEE 1202, "Standard for Flame-Propagation Testing of Wire and Cable."

8.3-12 IEEE Standard C57.12.00, "Standard General Requirements for Liquid-Immersed Distribution, Power, and Regulating Transformers."

8.3-13 IEEE 323, "Standard for Qualifying Class 1E Equipment for Nuclear Power Generating Stations."

8.3-14 IEEE 344, "Recommended Practice for Seismic Qualification of Class 1E Equipment for Nuclear Power Generating Stations."

8.3-15 IEEE 519, "Recommended Practices and Requirements for Harmonic Control in Electrical Power Systems."

8.3-16 IEEE 379, "Standard Application of the Single-Failure Criterion to Nuclear Power Generating Station Safety Systems."

8.3-17 NEMA ICS-2, "Industrial Control and Systems: Controllers, Contactors, and Overload Relays Rated 600 Volts."

8.3-18 Underwriter's Laboratories Standard No. 845, "UL Standard for Safety for Motor Control Centers, 4TH Edition."

8.3-19 IEEE C37.13, "Standard for Low-Voltage AC Power Circuit Breakers Used in Enclosures."

8.3-20 IEEE C37.16, "Low Voltage Power Circuit Breakers and AC Power Circuit Protectors - Preferred Ratings, Related Requirements, and Application Recommendations."

8.3-21 IEEE C37.17, "American National Standard for Trip Devices for AC and General Purpose DC Low Voltage Power Circuit Breakers."

8.3-22 ANSI C37.50, "Switchgear Low Voltage AC Power Circuit Breakers Used in Enclosures – Test Procedures."

8.3-23 Underwriter's Laboratories Standard No. 489, "UL Standard for Molded-Case Circuit Breakers, Molded-Case Switches, and Circuit-Breaker Enclosures."

8.3-24 NEMA AB-1, "Molded Case Circuit Breakers and Molded Case Switches."

8.3-25 IEEE C37.04, "Standard Rating Structure for AC High-Voltage Circuit Breakers."

8.3-26 IEEE C37.06, "AC High-Voltage Circuit Breakers Rated on a Symmetrical Current Basis - Preferred Ratings and Related Required Capabilities."

8.3-27 IEEE C37.09, "Standard Test Procedure for AC High-Voltage Circuit Breakers Rated on a Symmetrical Current Basis."

8.3-28 IEEE C37.010, "Application Guide for AC High-Voltage Circuit Breakers Rated on a Symmetrical Current Basis."

8.3-29 IEEE C37.11, "Standard Requirements for Electrical Control for AC High-Voltage Circuit Breakers Rated on a Symmetrical Current Basis."

8.3-30 IEEE 741, "Standard Criteria for the Protection of Class 1E Power Systems and Equipment in Nuclear Power Generating Stations."

8.3-31 IEEE C37.20.2, "Standard for Metal-Clad Switchgear."

8.3-32 IEEE C37.100, "Standard Definitions for Power Switchgear."

8.3-33 IEEE 603, "Standard Criteria for Safety Systems for Nuclear Power Generating Stations."

8.3-34 IEEE C57.12.80, "Standard Terminology for Power and Distribution Transformers."

8.3-35 IEEE C57.12.90, "Standard Test Code for Liquid-Immersed Distribution, Power, and Regulating Transformers."

8.3-36 IEEE C57.93, "Guide for Installation of Liquid-Immersed Power Transformers."

8.3-37 IEEE 338, "Standard Criteria for the Periodic Surveillance Testing of Nuclear Power Generating Station Safety Systems."

8.3-38 IEEE 308, "Standard Criteria for Class 1E Power Systems for Nuclear Power Generating Stations."

8.3-39 IEEE 100, "The Authoritative Dictionary of IEEE Standards Terms."

8.3-40 IEEE C37.32, "High-Voltage Air Disconnect Switches Interrupter Switches, Fault Initiating Switches, Grounding Switches, Bus Supports and Accessories Control Voltage Ranges-Schedules of Preferred Ratings, Construction Guidelines and Specifications."

8.3-41 IEEE 666, "Design Guide for Electric Power Service Systems for Generating Stations."

Table 8.3-1

Diesel-Generator Alarms

Alarm points

DESCRIPTION	ALARM	
	LOCAL	REMOTE
Diesel engine running	X	X
D/G trouble		X
D/G controls not in Auto	X	X
D/G main breaker trip	X	X
D/G in maintenance mode	X	X
D/G in parallel mode	X	X
D/G overspeed	X	X
Engine failed to start	X	X
Generator Differential relay	X	X
Reverse power relay	X	X
Field relay	X	X
Overcurrent relay	X	X
Lock-out relay operated	X	X
Overvoltage relay	X	X
Ground relay	X	X
Over temperature relay	X	X
Undervoltage relay	X	X
Frequency relay	X	X

Indication

DESCRIPTION	INDICATION	
	LOCAL	REMOTE
Engine speed	X	X
Engine hour meter	X	X
Generator output voltage	X	X
Current	X	X
Active power output	X	X
Reactive power output	X	X

Table 8.3-2

Battery Cycle Times

Safety-related	Division/train	Rated voltage (V)	Cycle Time (h)
Y	1	250	72
Y	1	250	72
Y	2	250	72
Y	2	250	72
Y	3	250	72
Y	3	250	72
Y	4	250	72
Y	4	250	72
N	A	250	2
N	A	250	2
N	B	250	2
N	B	250	2
N	C	250	2
N	A	125	2
N	B	125	2

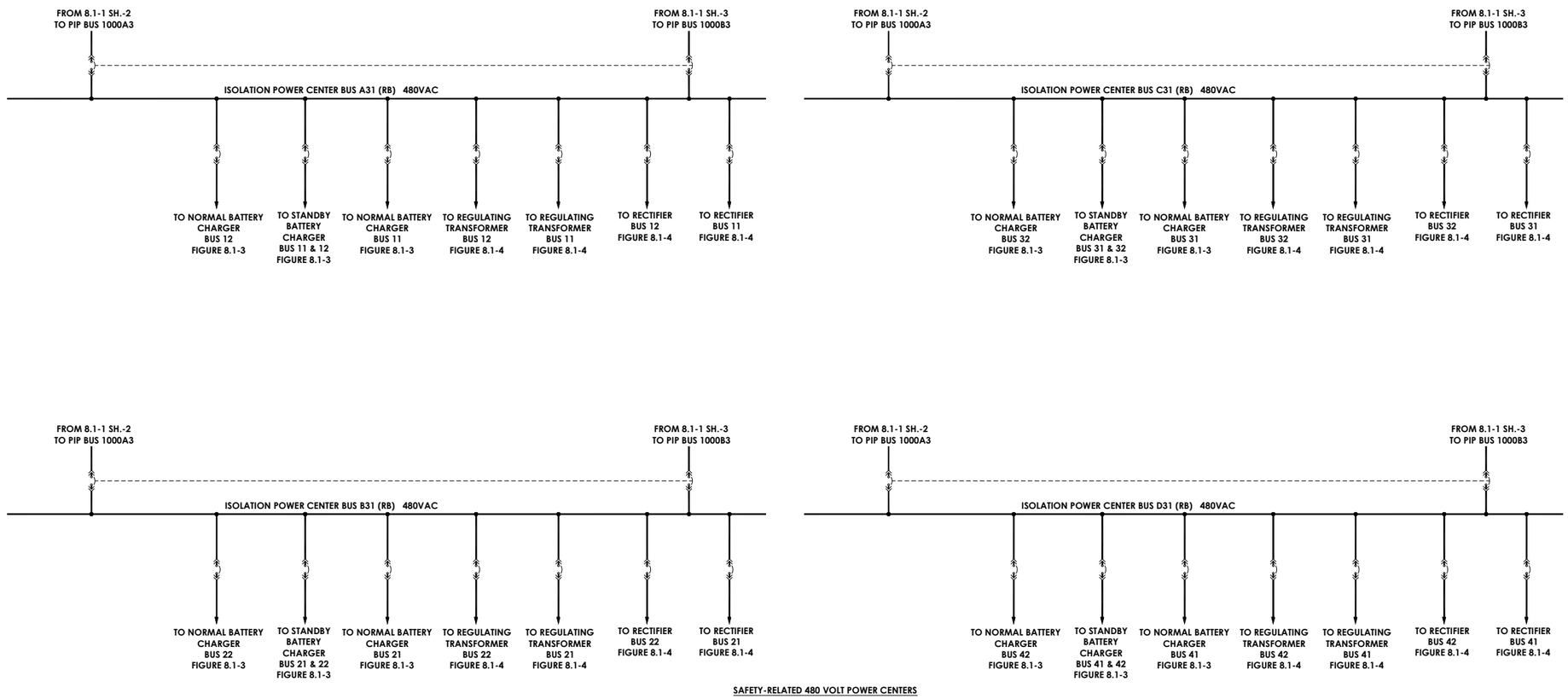

Figure 8.3-1. Safety-Related 480 Volt Power Centers

Sh 1 of 1

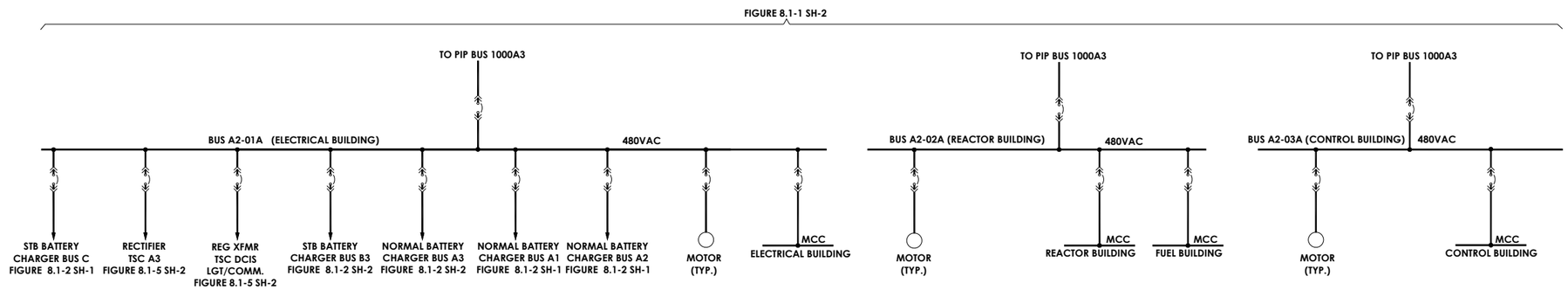

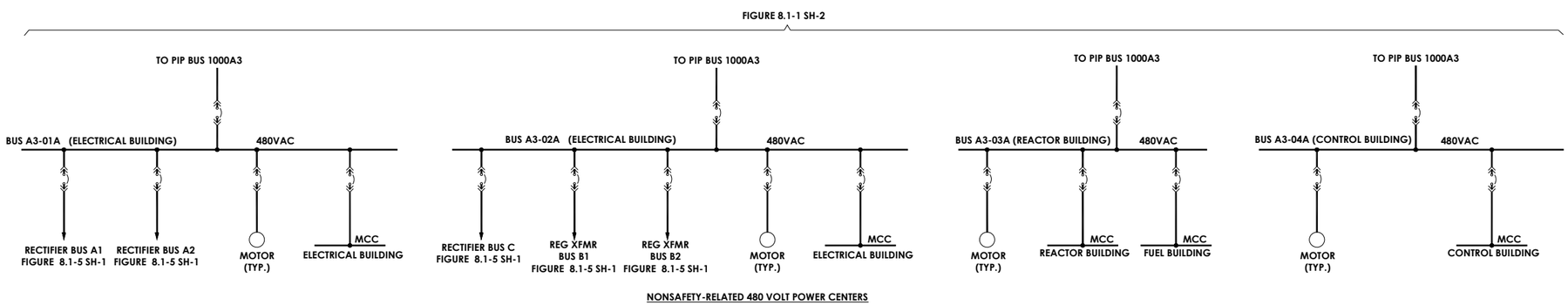

Figure 8.3-2. Nonsafety-Related 480 Volt Power Centers
Sh 1 of 3

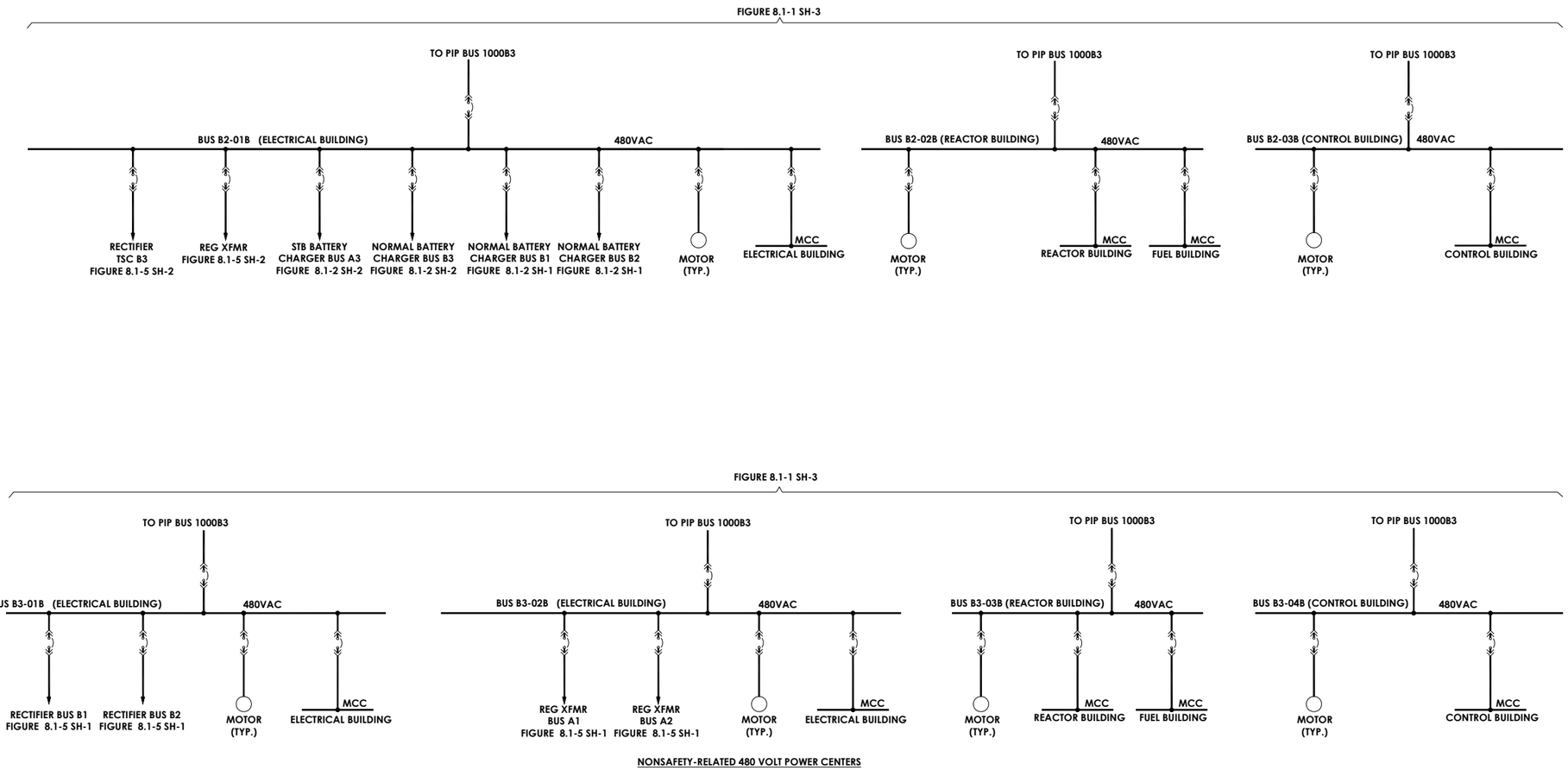

Figure 8.3-2. Nonsafety-Related 480 Volt Power Centers
Sh 2 of 3

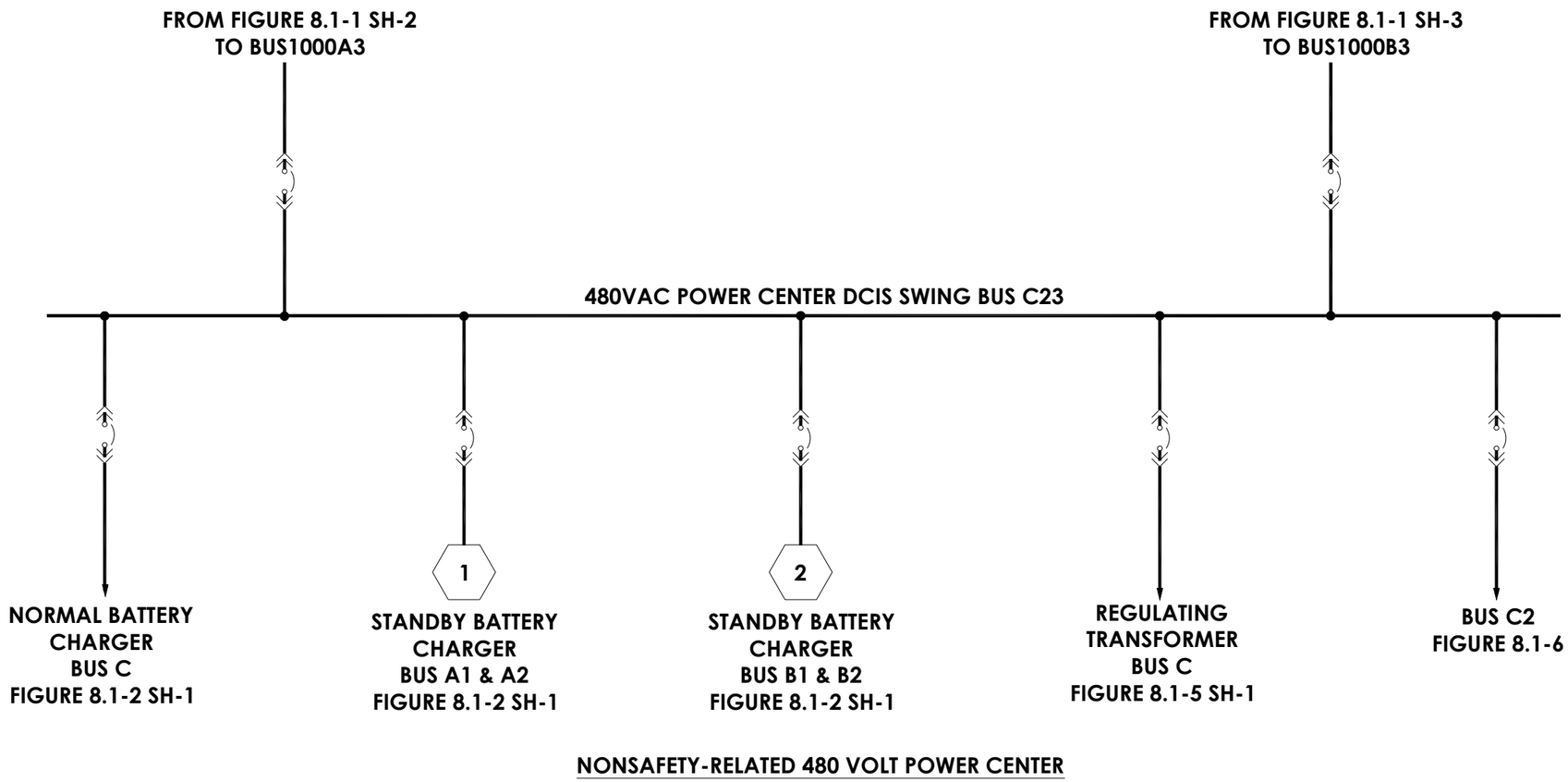

Figure 8.3-2. Nonsafety-Related 480 Volt Power Centers
Sh 3 of 3

APPENDIX 8A MISCELLANEOUS ELECTRICAL SYSTEMS

8A.1 STATION GROUNDING AND SURGE PROTECTION

8A.1.1 Description

The electrical grounding system is comprised of:

- An instrument and computer grounding network;
- An equipment-grounding network for grounding electrical equipment (e.g., transformer, switchgear, motors, distribution panels, cables, etc.) and selected mechanical components (for example, fuel tanks, chemical tanks, etc.);
- A plant grounding grid; and
- A lightning protection network for protection of all structures, transformers and equipment.

The plant instrumentation is grounded through a separate insulated radial grounding system comprised of buses and insulated cables. The instrumentation grounding systems are connected to the station-grounding grid at discrete points and are insulated from all other grounding circuits. Separate instrumentation grounding systems are provided for plant analog (that is, relays, solenoids, etc.) and digital instrumentation systems. It should be recognized that there are numerous accepted grounding techniques and that the actual installation of a ground system should be made with reference to the recommendations of the I&C equipment manufacturers since the techniques used to solve one problem may result in the creation of a different problem (8A.4, References, 8A-8, IEEE-1050 "IEEE Guide for Instrumentation and Control Equipment Grounding in Generating Stations.").

The equipment-grounding network is such that all major equipment, structures and tanks are grounded with two diagonally opposite ground connections. The ground bus of all switchgear assemblies, motor control centers and control cabinets are connected to the station ground grid through at least two parallel paths. Bare copper risers are furnished for all underground electrical ducts and equipment, and for connections to the grounding systems within buildings. One bare copper cable is installed with each underground electrical duct run, and all metallic hardware in each manhole is connected to the cable.

A plant-grounding grid consisting of bare copper cables is provided to limit step and touch potentials to safe values under all fault conditions. The buried grid is located at the switchyard and connected to systems within the buildings by a 500 kcmil bare copper loop, which encircles each building.

Each building is equipped with grounding systems connected to the plant-grounding grid. As a minimum, every other steel column of the building perimeter is connected directly to the grounding grid.

The plant's main generator is grounded with a neutral grounding device to limit the magnitude of fault current due to a solid phase-to-ground fault. The impedance of the neutral grounding device limits the maximum phase-to-ground current under short-circuit conditions, however, it does not limit the current for a three-phase fault or phase-to-phase fault at its terminals.

The onsite, medium-voltage AC distribution system is resistance grounded at the neutral point of the low-voltage windings of the UATs and RATs. The neutral point of the generator windings of the Standby Onsite AC Power Supply is through neutral resistors, sized for continuous operation in the event of a ground fault.

The neutral point of the low-voltage AC distribution systems is either solidly or impedance grounded to ensure proper coordination of ground fault protection. The DC systems are ungrounded.

The target value of ground resistance is one ohm or less for the Reactor, Turbine, Control, Service, Radwaste, and other miscellaneous outdoor buildings. This is consistent with Section 14.1 of IEEE-80. If the target grounding resistance is not achieved by the ground grid, auxiliary ground grids, shallow buried ground rods or deep buried ground rods will be used in combination as necessary to meet the target ground resistance value.

The lightning protection system covers all major plant structures and is designed to prevent direct lightning strikes to the buildings, electric power equipment and instruments. It consists of air terminals, bare downcomers and buried grounding electrodes, which are separate from the normal grounding system. Lightning arresters are provided for each phase of all tie lines connecting the plant electrical systems to the switchyard and offsite lines. These arresters are connected to the high-voltage terminals of the main step-up transformers, UATs, and RATs. Plant instrumentation located outdoors or connected to cabling running outdoors is provided with surge suppression devices to protect the equipment from lightning induced surges.

8A.1.2 Analysis

No SRP or regulatory guidance is provided for the grounding protection system. Lightning protection is provided in accordance with Regulatory Guide (RG) 1.204, "Guidelines for Lightning Protection of Nuclear Power Plants." (See Subsection 8.1.5.2.4 and Table 8.1-1.) Both systems are designed and required to be installed to the applicable sections of the following codes and standards.

(1) IEEE-80, Guide for Safety in AC Substation Grounding (Reference 8A-1);

(2) IEEE-81, Guide for Measuring Earth Resistivity, Ground Impedance, and Earth Surface Potentials of a Ground System (Reference 8A-2);

(3) IEEE-665, Guide for Generation Station Grounding (Reference 8A-3);

(4) IEEE-1050, IEEE Guide for Instrumentation and Control Equipment Grounding in Generating Stations (Reference 8A-8);

(5) NFPA-780, Standard for the Installation of Lightning Protection Systems[1] (Reference 8A-4); and

(6) IEEE-C62.23, IEEE Application Guide for Surge Protection of Electric Generating Plants (Reference 8A-9).

[1] This code is utilized as recommended practices only. As stated in NFPA 780, the standard does not apply directly to electric generating facilities. However, concurrent with RG 1.204, NFPA 780 may be used for guidance in nuclear power plants and the identification of applicable standards.

8A.2 CATHODIC PROTECTION

8A.2.1 Description

A cathodic protection system is provided to the extent required. Its design is plant unique and is tailored to the site conditions and meets the requirements of the National Association of Corrosion Engineers (NACE) Standards (Reference 8A-5). See 8A.2.3-1-A.

8A.2.2 Analysis

There are no SRP or regulatory requirements for cathodic protection systems. The system is designed to the requirements listed in Subsection 8A.2.1.

8A.2.3 COL Information

8A.2.3-1-A Cathodic Protection System

The COL applicant shall provide the minimum requirements for the design of the cathodic protection system. (Subsection 8A.2.1)

8A.3 ELECTRIC HEAT TRACING

8A.3.1 Description

The electric heat tracing system provides freeze protection where required for outdoor service components and warming of process fluids if required, either indoors or outdoors. If the operation of the heat tracing is required for proper operation of a safety-related system, the heat tracing for the safety-related system is required to be safety-related. Power for heat tracing is supplied from the onsite distribution system buses. Nonsafety-related heat tracing is supplied from the same Power Center or Motor Control Center as the components protected. Safety-related heat tracing is assigned to the appropriate division of safety-related power.

8A.3.2 Analysis

There are no SRP or regulatory guidance provided for electric heat tracing systems. The ESBWR standard design has no required safety-related heat tracing.

- IEEE-622, Recommended Practice for the Design and Installation of Electric Heat Tracing Systems for Nuclear Power Generating Stations (Reference 8A-6).
- IEEE-622A, Recommended Practice for the Design and Installation of Electric Pipe Heating Control and Alarm Systems for Power Generating Stations (Reference 8A-7).

8A.4 REFERENCES

8A-1 IEEE-80, “Guide for Safety in AC Substation Grounding.”

8A-2 IEEE-81, “Guide for Measuring Earth Resistivity, Ground Impedance, and Earth Surface Potentials of a Ground System.”

8A-3 IEEE-665, “Guide for Generating Station Grounding.”

8A-4 NFPA-780, ”Standard for the Installation of Lightning Protection Systems.”

8A-5 National Association of Corrosion Engineers (NACE) Standards.

8A-6 IEEE-622, "Recommended Practice for the Design and Installation of Electric Heat Tracing Systems for Nuclear Power Generating Stations."

8A-7 IEEE-622A, "Recommended Practice for the Design and Installation of Electric Pipe Heating Control and Alarm Systems for Power Generating Stations."

8A-8 IEEE-1050, "IEEE Guide for Instrumentation and Control Equipment Grounding in Generating Stations."

8A-9 IEEE-C62.23, "IEEE Application Guide for Surge Protection of Electric Generating Plants."