Enclosure 2

BACKGROUND, STATUS, AND ISSUES RELATED TO THE REGULATION OF ADVANCED SPENT NUCLEAR FUEL RECYCLE FACILITIES

A White Paper of the U.S. Nuclear Regulatory Commission's Advisory Committee on Nuclear Waste and Materials

Prepared by

A. G. Croff, Committee Member
R .G. Wymer, Consultant
L. T. Tavlarides, Consultant
J. H. Flack, Committee Staff
H. J. Larson, Consultant

September 9, 2007 Final Draft

CONTENTS

LIST OF ACRONYMS xi

SUMMARY xiv
INTRODUCTION xiv
SPENT NUCLEAR FUEL RECYCLE HISTORY AND TECHNOLOGY xv
What is reprocessed? xv
How is SNF currently reprocessed xv
Where was and is SNF reprocessed xvii
Status of SNF reprocessing technology xvii
Where is fuel refabricated? xviii
ADVANCED RECYCLE TECHNOLOGY xviii
Overview of Advanced Spent Nuclear Fuel Recycle Initiatives xviii
Advanced Fuel Reprocessing Technology xviii
Advanced Fuel Fabrication and Refabrication xx
REGULATION AND LICENSING OF FUEL RECYCLE FACILITIES xx
ISSUES ASSOCIATED WITH LICENSING AND REGULATING FUEL RECYCLE FACILITIES xxi
Development of licensing regulation(s) for recycle facilities xxi
Impacts of SNF Recycle on Related Regulations xxii
Other Regulatory Issues Arising from SNF Recycle xxiv
RESEARCH NEEDS xxvi

I. INTRODUCTION 1
A. Background and context 1
B. Goal and Purposes 2
C. Scope 4
D. Information Sources 4

II. RECYCLE FACILITY FEEDSTOCK: SPENT NUCLEAR FUEL DESIGNS 6
A. Overview of generic fuel cycles 6
1. Uranium-Plutonium Fuel Cycle 6
2. Thorium-Uranium Fuel Cycle 6
B. Fuel Designs 6
1. Pressurized Water Reactors (PWR) 6
2. Boiling Water Reactors (BWR) 8
3. Fast Reactors 10
a. Oxide 10
b. Carbide 10
c. U/Pu/Zr 11
d. Nitride 11
4. High-Temperature Gas-Cooled Reactors (HTGR) 13
5. Molten Salt Reactor (MSR) 13

III. OVERVIEW OF SPENT NUCLEAR FUEL RECYCLE 14
A. Reprocessing Experience and Evaluations 14
1. U.S. Defense and Commercial Reprocessing Plants 14
a. Reprocessing for Weapons Plutonium Recovery 14

i. Bismuth Phosphate Process 14
ii. Redox Process (Hexone) 15
iii. PUREX Process 15
b. U.S. Commercial reprocessing plants 18
i. Nuclear Fuel Services (NFS - West Valley Plant) 18
ii. GE Morris, Il Plant 18
iii. Barnwell Nuclear Fuel Plant 18
2. International Reprocessing Plant Summary 18
a. France 21
b. Great Britain 21
c. Japan 22
d. Russia 22
e. India 22
f. China 23
g. South Korea 23
3. THORP Reprocessing Plant PUREX Process 23
a. Spent Nuclear Fuel Shearing and Dissolution 26
b. HA Cycle 26
c. Plutonium Purification Cycle 27
d. Uranium Purification Cycle 27
e. Separation Performance of THORP 27
f. Neptunium Chemistry in THORP 28
g. Technetium Chemistry in THORP 29
h. Conclusions 29
4. La Hague Reprocessing Plant PUREX Process 29
a. Spent fuel receiving and storage 30
b. Shearing and dissolution 30
c. U/Pu solvent extraction separation and purification 30
d. Conversion of U and Pu to products 33
e. Management and treatment of process wastes 33
f. Radioelements released 33
5. Accidents at Spent Fuel Reprocessing Facilities 34
a. Sellafield Facility 34
b. La Hague Facility 34
c. Mayak 34
d. Tokai reprocessing plant 35
e. International Nuclear Event Scale and Accident Classification 35
6. Consolidated Fuel Reprocessing Program 37
7. International Nuclear Fuel Cycle Evaluation (INFCE) 38
a. Content of the INFCE Study 39
b. Principle Conclusions 39
B. Fuel Fabrication and Refabrication 39
1. Fuel Refabrication Technology 39
2. MOX Fuel Fabrication Facilities 42
3. HTGR Fuel Fabrication 42

IV. RECYCLE FACILITY SITING AND DESIGN 49
A. Site selection 49
B. Design and Construction 50
1. Design 51
2. Construction 53

3. Equipment Modules . . . 58
a. Spent Fuel Receiving And Storage . . . 58
b. Main Process Cells . . . 59
c. Waste Solidification Plant . . . 61
d. Uranium Hexafluoride Conversion Plant . . . 61
e. Plutonium Product Facility . . . 61
f. Auxiliary Process Systems and Service Areas . . . 62
i. Ventilation System . . . 62
ii. Electrical Power . . . 63
iii. Fire Protection System . . . 63
iv. Hot and Cold Laboratory Area . . . 63
g. Control Room Area . . . 64
h. Liquid Waste Storage Areas . . . 64
i. Solid Waste Storage . . . 66
4. Criticality Control Methods . . . 66
a. Physical form control . . . 66
b. Mass control . . . 66
c. Composition control . . . 66
d. Geometry control . . . 66
C. Du Pont Reprocessing Studies . . . 67
D. Operator Licensing and Training . . . 67
1. Experience at NFS . . . 68
2. Experience at the MFRP . . . 69
3. Experience at BNFP . . . 70
4. Training for operation of the Rokkasho-Mura reprocessing plant . . . 70
5. Typical Reprocessing Plant Operator Training Program . . . 70
E. Needed Improvements . . . 71
1. Improved Processes . . . 71
2. Improved Equipment . . . 72
3. Security and Safeguards . . . 72
4. Detectors . . . 72
5. Material Accountability . . . 73

V. OVERVIEW OF ADVANCED SPENT NUCLEAR FUEL RECYCLE INITIATIVES . . . 76
A. Advanced Fuel Cycle Initiative . . . 76
1. Separations . . . 76
2. Fuels . . . 77
3. Transmutation . . . 77
4. University Programs . . . 77
a. University Nuclear Infrastructure (UNI) . . . 77
b. Nuclear Engineering Education Research (NEER) Grants . . . 78
c. Other University Support Activities . . . 78
B. Global Nuclear Energy Partnership . . . 79
1. GNEP Goals . . . 79
2. GNEP Timetable – phased approach . . . 80
C. Russian “Equivalent” Proposal (Global Nuclear Infrastructure - GNI) . . . 81
D. Generation IV Nuclear Reactors . . . 82
E. Nuclear Power 2010 . . . 82

VI. ADVANCED FUEL REPROCESSING TECHNOLOGY . . . 83
A. UREX Processes . . . 84

1. Discussion of the UREX +1a Flowsheet 93
   a. Head End 93
   b. Central Unit Operations 95
      i. UREX 95
      ii. CCD-PEG 96
      iii. TRUEX 96
      iv. TALSPEAK 96
      v. Products and wastes 97
2. Process assumptions for modeling the UREX +1a flowsheet 98
   a. Off-gas effluent stream 98
   b. Technetium stream 100
   c. Uranium product stream 101
   d. Solvent waste streams 101
   e. Fission product stream 101
   f. Cs/Sr stream 101
   g. Actinide Stream 101
   h. LaHague Reprocessing Plant Effluents 102
3. Quantitative Analysis of UREX +1a Waste and Product Stream Characteristics 103
   a. Volatiles in Waste 108
   b. Cladding, Technetium, and Dissolver Solids 109
   c. Uranium Product 109
   d. TRU Product 110
   e. Cs/Sr Waste 110
   f. Fission Product Waste 111
   g. Spent Nuclear Fuel Comparison 112
4. Potentially Toxic and Reactive Materials 112
   a. Red Oil Explosions 113
   b. Ion Exchange Resin Explosions 113

B. Pyroprocessing 114
C. Reprocessing HTGR Fuels 118
   1. Flowsheets 118
   2. Unusual Plant Features 119
   3. Reprocessing Wastes 119
D. French Proposals 119
   1. GANEX 119
   2. COEX™ 122
E. General Electric's Pyroprocess 124

VII. ADVANCED FUEL REFABRICATION 125

VIII. REGULATION AND LICENSING OF FUEL RECYCLE FACILITIES 126
A. Licensing – An historical perspective 126
   1. Licensing experience at Nuclear Fuel Services 126
   2. Licensing experience at Barnwell 127
B. Current licensing process and alternatives 127
C. Environmental Protection 129
   1. Design Perspective 129
   2. Operating Perspective 130
D. Decommissioning 132

IX. ISSUES ASSOCIATED WITH LICENSING AND REGULATING FUEL RECYCLE

FACILITIES 135
A. Selection or development of licensing regulation(s) for recycle facilities 135
1. Multiple regulatory paths are available 135
2. NRC Staff's Proposed Options and Commission Direction for Licensing GNEP Recycle Facilities 136
3. Important factors in developing regulations for SNF recycle facilities 137
B. Impacts on related regulations 139
1. Potential impacts of new radioactive product, effluent, and waste materials 139
a. Identification of new product, effluent, and waste materials from SNF recycle 139
b. Classification of wastes 140
c. Waste forms 141
d. Distribution of radionuclides in product, effluent, waste, and process streams 141
e. Disposal technology 142
f. Repository licensing regulations 142
g. Uranium handling and disposal facilities 143
2. Novel facilities 143
a. Cs/Sr Storage/Disposal Facility 143
b. Storage facility for transuranic element product 144
3. Novel process streams and paradigms for safeguards and security 144
4. Evaluation of integrated plant performance 144
5. Design and operate with decommissioning in mind 145
C. NRC Test Facilities 145
D. Operator Licensing Examinations 146
E. Sigma ID Requirements 146
F. Timing and urgency 146
1. Time required to prepare and be ready to review a license application for a UREX flowsheet 147
2. Time required to prepare and be ready to review a license application for a modified PUREX flowsheet 148

X. OTHER IMPORTANT ISSUES RELATED TO LICENSING 150
A. Completion of generic environmental documentation and standards 150
B. Obtaining adequate numbers of qualified staff 151
C. Potential international issues 152
D. Interface between NRC and DOE regulatory authorities 152

REFERENCES 153

GLOSSARY 163

APPENDIX A: Description of the Purex Process in the Barnwell Nuclear Fuel Plant A-1

APPENDIX B: Decay Heat in Spent Fuel B-1

APPENDIX C: Committee Letters Related to Risk-Informed Activities and Probabilistic Risk Assessment C-1

APPENDIX D: 10 CFR Part 55 Operators Licenses D-1

APPENDIX E. Radionuclide Distribution Among UREX +1a Process Streams E-1

TABLES

Table 1 Civil Reprocessing Plants Operating and Planned in Other Nations 19
Table 2 Decommissioned Civil Reprocessing 20
Table 3 Quality of THORP UO_3 Product 28
Table 4 Quality of THORP PuO_2 Product 28
Table 5 The International Nuclear Event Scale 36
Table 6 Types, Occurrences of Accidents at Reprocessing Plants and Sites 37
Table 7 Capacity and status of operating MOX fuel fabrication plants 43
Table 8 Typical Coated Particle Composition and Dimensions for Pebble Bed Fuel 45
Table 9 Radiation Zones and Permissible Radiation Fields at BNFP 53
Table 10 Primary Functions of Areas in the BNFP Spent Fuel Receiving and Storage Station 58
Table 11 Primary Functions of Main Process Cells 60
Table 12 Primary Functions of Major Process Cells in the Waste Solidification Plant 61
Table 13 Experience in Applications Made By, and Licenses Awarded to, NFS Plant Personnel 69
Table 14 Sigma ID Requirements Based on the Current Most Stringent, Category 1 Requirements for NRC and DOE 74
Table 15 Variants of the UREX Process 85
Table 16 Typical PWR Assembly Composition 93
Table 17. LaHague Reprocessing Plant Radionuclide Liquid Releases to the Sea in 2006 . . . 102
Table 18. LaHague Reprocessing Plant Radionuclide Gaseous Releases to the Atmosphere in 2006 102
Table 19 Compositions and Amounts of Waste Streams 106
Table 20 Regulatory Options for advanced fuel recycle and burner reactor facilities 136
Table A1 Spent nuclear fuel specifications circa the mid-1970s A-1
Table A2 Characteristics of plutonium nitrate feed to the BNFP plutonium product facility . A-5
Table A3 Functions of cells in the BNFP Waste Solidification Plant A-9

FIGURES

Fig. S.1 Schematic diagram of the Purex process xvi
Fig. S.2 Highly Simplified Urex +1a Flowsheet xix
Fig. 1 PWR Fuel Assembly and Hardware 7
Fig. 2 BWR fuel assembly 9
Fig. 3 LMFBR Fuel Assembly 12
Fig. 4 Purex process flowsheet 17
Fig. 5 THORP Reprocessing Plant Chemical Process Flowsheet 25
Fig. 6 Comparison of original and current French UP3 reprocessing plant solvent extraction cycles 32
Fig. 7 Diagram of MOX fuel fabrication process 41
Fig. 8 Schematic and photograph of TRISO particle 44
Fig. 9 Photograph of German HTGR pebble fuel element 46
Fig. 10 Prismatic HTGR fuel element 48
Fig. 11 BNFP fuel reprocessing plant operating area in front of hot cells 55
Fig. 12 Glove boxes used for handling nuclear materials having low levels of penetrating radiation 57
Fig. 13 Tanks for liquid HLW storage under construction at the BNFP facility 65
Fig. 14 Diagram of Primary UREX +1a Process Unit Operations 87
Fig. 15 Diagram of UREX+1a Step 1: Modified Purex to separate uranium product 89
Fig. 16 Diagram of UREX+1a Step 2: CCD-PEG to remove Cs/Sr 90
Fig. 17 Diagram of UREX+1A Step 3: TRUEX to remove non-lanthanide fission products . . . 91
Fig. 18 Diagram of UREX+1a Step 4: TALSPEAK to remove lanthanides from TRU 92
Fig. 19 Distribution of U.S. spent nuclear fuel in 1999 as a function of age 104
Fig. 20 Schematic diagram of pyroprocessing with uranium recovery 116
Fig. 21 Pictorial representation of pyroprocessing operations 117
Fig. 22 The French Ganex Process 121
Fig. 23 The French COEX™ Process 123

Fig. B1 Contributions of selected actinides and fission products to heat generation rate B-2
Fig. B2 Process Waste Decay Heat without Pu and Am B-3

LIST OF ACRONYMS

ABR	Advanced burner reactor
ABWR	Advanced boiling water reactor
ACRS	Advisory Committee on Reactor Safeguards
ACNW	Advisory Committee on Nuclear Waste
AFCI	Advanced Fuel Cycle Initiative
AFCF	Advanced Fuel Cycle Facility
AHA	Acetohydroxamic acid
ALARA	As Low as reasonably achievable
AVR	Arbeitsgemeinschaft versuchsreaktor (working group test reactor)
BNFP	Barnwell Nuclear Fuel Plant
BWR	Boiling water reactor
CANDU	Canada deuterium uranium (reactor)
CCD-PEG	Chlorinated cobalt dicarbollide-polyethylene glycol
CEQ	Council on Environment Quality
CFR	Code of the Federal Register
CFRP	Consolidated Fuel Reprocessing Program
Ci	Curie
CMPO	octyl-(phenyl)-N,N'-disobutylcarbamylphosphine oxide
CNNC	China National Nuclear Corporation
COEX	Co-extraction
COL	Construction and operating license
CP	Construction permit
DBA	Design basis accident
DOE	Department of Energy
DTPA	Diethylenetriaminepentaacetic acid
DUPIC	Direct use of spent PWR fuel in CANDU reactors
EBR-II	Experimental breeder reactor II
EIS	Environmental Impact Statement
EOI	Expression of interest
FBR	Fast breeder reactor
FRSS	Fuel receiving and storage station
FS-13	Solvent for extractants in CCD-PEG process
GANEX	Global actinide extraction
CBZ	Glass-bonded zeolite
GCR	Gas-cooled reactor
GDC	General design criteria
GEN IV	Generation IV
GESMO	Generic Environmental Statement on Mixed Oxide Fuel
GIF	Generation IV International Forum
GNEP	Global Nuclear Energy Partnership
GNI	Global Nuclear Infrastructure
GTCC	Greater than Class C
GW	Giga-watt
GWd	Giga-watt day

HAN	Hydroxylamine nitrate
HDEHP	Bis(2-ethylhexyl) phosphoric acid
HEPA	High-efficiency particulate air filter
HILC	High-intermediate-level cell
HLC	High-level cell
HLGPT	High-level general process trash
HLW	High-level waste
HTGR	High-temperature gas-cooled reactor
HTTR (Japan)	High-temperature engineering test reactor
IAEA	International Atomic Energy Agency
ILC	Intermediate-level cell
INFCE	International Nuclear Fuel Cycle Evaluation
INIE	Innovation in Nuclear Infrastructure and Education
INPRO	International Project on Innovative Nuclear Reactors and Fuel Cycles
IPS	International plutonium storage
IPyC	Inner pyrocarbon layer
ISA	Integrated Safety Analysis
ISFSI	Independent spent fuel storage installation
KARP	Kalpakkam reprocessing plant
LAW	Low-activity waste
LLGPT	Low-level general process trash
LLW	Low-level waste
LMFBR	Liquid metal fast breeder reactor
Ln	Lanthanide
LS-VHTR	Liquid salt VHTR
LWR	Light water reactor
MAA	Material access area
MFRP	Midwest Fuel Reprocessing Plant
MNA	Multilateral approaches to the nuclear fuel cycle
MOX	Mixed oxide
mR	Millirem
MSR	Molten salt reactor
MSRE	Molten salt reactor experiment
MTR	Materials test reactor
MTIHM	Metric tonnes initial heavy metal
MTU	Metric tonnes uranium
MWe	Megawatts electrical
NEPA	National Environmental Policy Act
NERAC	Nuclear Energy Research Advisory Committee
NFS	Nuclear Fuel Services
NPP	Nuclear power plant
NRC	Nuclear Regulatory Commission
NWPA	Nuclear Waste Policy Act
OPyC	Outer pyrocarbon layer
OSHA	Occupational Safety and Health Administration

PHWR	Pressurized heavy water reactor
PIC	Polymer-impregnated cement
PNSL	Plutonium nitrate storage and load-out cell
PPC	Plutonium product cell
PPF	Plutonium product facility
ppmw	Part per million by weight
PRA	Probabilistic risk assessment
PREFRE	Power reactor fuel reprocessing facility
PWR	Pressurized water reactor
PyC	Pyro-carbon
RMSC	Remote maintenance scrap cell
ROP	Reactor oversight process
RPC	Remote process cell
SiC	Silicon carbide
SRM	Staff requirements memorandum
SSNM	Source and special nuclear material
SX	Solvent extraction
TALSPEAK	Trivalent actinide-lanthanide separation by phosphorous reagent extraction from aqueous complexes
TBP	Tri-n-butyl phosphate
THTR	Thorium high-temperature reactor
TRISO	Tristructural-isotropic
TRU	Transuranium
TRUEX	Transuranium extraction
VA	Vital area
WIR	Wastes incidental to reprocessing
WSP	Waste solidification plant
WTEG	Waste tank equipment gallery
WVDP	West Valley Demonstration Project
YM	Yucca Mountain

SUMMARY

INTRODUCTION

The U.S. currently has 104 operating commercial nuclear power reactors that produce about 2100 tonnes of spent nuclear fuel each year. DOE estimates that the Congressionally mandated capacity limit of 70,000 tonnes of heavy metal equivalent imposed on the proposed Yucca Mountain (YM) repository will be committed to accumulated spent commercial fuel and other DOE wastes by about 2010. The SNF from existing and future nuclear power reactors in the U.S. poses challenges as follows:

- The desire to create additional disposal capacity without creating additional repositories.
- The potential to increase utilization of the fissile and fertile material that comprise about 1% and 95% of the SNF, respectively, by recovering and recycling[1].
- Avoiding the proliferation risk from production and use of a pure plutonium stream in recycle.
- Reducing the long-term repository risk from key radionuclides in SNF such as ^{99}Tc, ^{129}I, and ^{237}Np.

To address these challenges DOE is proposing to reprocess SNF, primarily from LWRs in the foreseeable future; reuse the recovered uranium directly or through re-enrichment; reuse the plutonium by making it into new reactor fuel (refabrication); destroy actinides that dominate repository risk by refabricating them into fuel or targets and irradiating the actinides in a nuclear reactor; and incorporating radionuclides that cannot be readily destroyed by irradiation into tailored waste forms. To address proliferation concerns, DOE proposes to reprocess the SNF using new approaches that do not produce a separated plutonium stream.

The DOE's current program for implementing SNF recycle contemplates building three facilities: an integrated nuclear fuel recycle facility, an advanced reactor for irradiating Np, Pu, Am, and Cm, and an advanced fuel cycle research facility to develop recycle technology. The first two of these are likely to be NRC-licensed.

Fuel recycle has the potential to require changes in the NRC's existing regulatory framework and expertise which are now structured to license light-water reactors and their associated once-through fuel cycle facilities including direct disposal of spent fuel. In recognition of this potential the Commission directed that the Advisory Committee on Nuclear Waste and Materials (the Committee) to become knowledgeable concerning developments in fuel recycle and help in defining the issues most important to the NRC concerning fuel recycle facilities. The Committee decided that the most efficient way to meet the potential needs of the Commission was to prepare a white paper on fuel recycle. A group of expert consultants was chartered to do so with this paper being the result.

This paper summarizes the technical, regulatory, and legal history, status, and issues concerning SNF recycle to provide input to a Committee letter to the Commission and "knowledge management": capturing the expertise of some experts (those preparing and reviewing the paper) concerning the history of SNF recycle and implications for current SNF recycle programs. In

[1] For the purposes of this document, "recycle" involves (a) reprocessing the spent nuclear fuel (separate SNF into its constituent components), (b) refabrication of fresh fuels containing plutonium, minor actinides, and possibly some fission products, c) management of solid, liquid, and gaseous wastes, and (d) storage of spent fuel and wastes.

addition to understanding the purposes of this paper, it is equally important for the reader to understand that the paper is not intended to address the implications of advanced reactors (e.g., fast-neutron-spectrum reactors for fissioning TRU elements), provide detailed recycle technology descriptions and characterization, provide details on pyroprocessing, focus on fuel fabrication and refabrication, evaluate the merits of DOE's technical or programmatic approach, or provide conclusions and recommendations.

SPENT NUCLEAR FUEL RECYCLE HISTORY AND TECHNOLOGY

What is reprocessed?

All operating U.S. power reactors and most power reactors in the world are light water reactors (LWRs) which are moderated and cooled with "light" (ordinary) water. The two most common types of LWRs are Pressurized Water Reactors (PWRs) and Boiling Water Reactors (BWRs). The most basic part of LWR fuel is a uranium dioxide ceramic fuel pellet which is about 1 cm in diameter and 2-3 cm long. The uranium enrichment is typically 3% to 5% ^{235}U. At some point the fissile content of a batch of new fuel that was inserted into the reactor core is sufficiently low and the fission product content sufficiently high so that its usefulness as a power source is exhausted. At this point the batch is removed from the reactor and sent to the storage pool as SNF. It is this SNF that constitutes the feed material for the initial step of fuel recycle: reprocessing.

How is SNF currently reprocessed?

Many processes for reprocessing SNF have been developed and several have been used at substantial scale since World War II. However, for industrial-scale applications the only process currently being used is the Purex (Plutonium-Uranium Extraction) process a diagram of which is shown in Fig. S.1.

The Purex process produces the following major waste streams:

- A liquid high-level waste that would eventually be converted to glass logs for eventual disposal in a deep geologic repository.
- Compacted and possibly immobilized (e.g., grouted) cladding waste and undissolved solids remaining after SNF dissolution in nitric acid with an uncertain disposition in the U.S.
- Waste forms containing the volatile radionuclides that were recovered with the form and disposition being uncertain in the U.S.

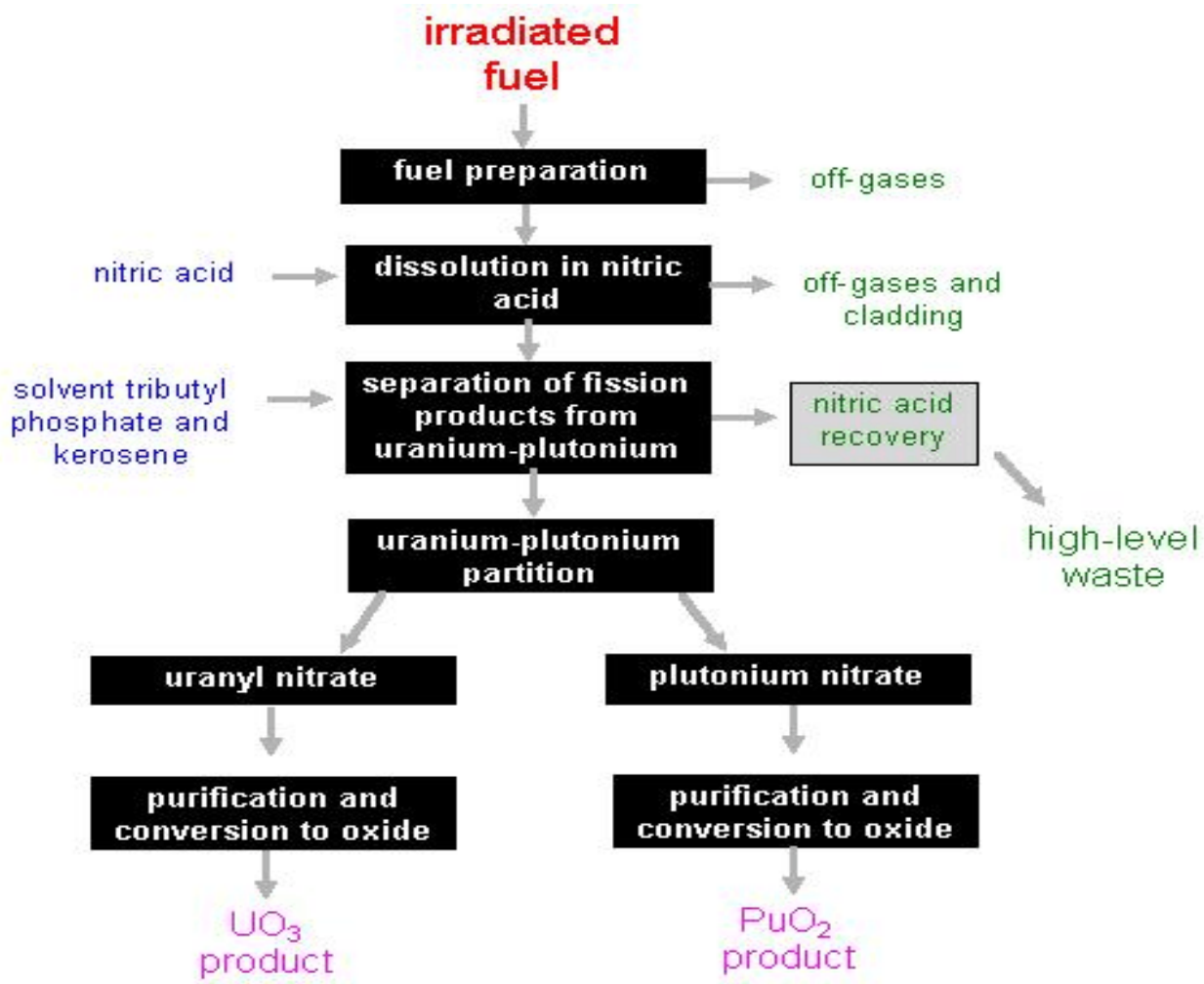

Fig. S.1 Schematic diagram of the Purex process

Where was and is SNF reprocessed?

Reprocessing was carried out using the PUREX process in large government–owned plants located in Richland, WA and Savannah River, SC for plutonium production. A plant was also constructed at Idaho Falls, ID to recover uranium from spent naval reactor and other highly-enriched fuels. These plants are no longer in operation although some legacy nuclear materials are still being reprocessed at Savannah River Site.

The first commercial spent fuel reprocessing plant, and the only one to operate to date in the U.S., was the Nuclear Fuel Services plant (NFS - West Valley Plant). The NFS plant is now shut down and undergoing decommissioning. In 1967 the Atomic Energy Commission (AEC) authorized General Electric Co. to build a reprocessing plant in Morris, IL. However, design and operational problems caused GE to halt construction of the plant before it processed any spent fuel. The water pool at the site is still used to store SNF. Construction of the BNFP in Barnwell, SC, near the DOE Savannah River site, began in 1970 but was never completed
Although the U.S. discontinued attempts at commercial spent fuel reprocessing in the mid-1970s this did not deter construction and operation of reprocessing facilities worldwide. The following are the major SNF reprocessing plants in the world:

- The French La Hague spent fuel reprocessing plants UP2 and UP3 for LWR SNF have a nominal capacity of 1700 MT of SNF per year.

- The THORP SNF reprocessing plant at Sellafield has a nominal capacity of 1200 MT of LWR and Advanced Gas Reactor SNF per year and the B205 plant for Magnox (metal) fuel at the same site a capacity of 1500 MT of SNF per year.

- Japan has a small reprocessing plant at Tokai-mura and is beginning operation of the 800 MT/yr LWR SNF reprocessing plant at Rokkasho-Mura. The process used in the Rokkasho plant is largely based on French technology.

- Russia has a 400 MT/yr commercial reprocessing plant at Mayak.

India has three reprocessing plants, none of which is safeguarded by IAEA. China plans to reprocess spent nuclear fuel, stating: “China will follow Japan’s lead and use the separated plutonium to fuel fast-breeder reactors.”

Status of SNF reprocessing technology

The many years of cumulative development and experience on SNF reprocessing in France and the UK have resulted in significant advances in simplifying the Purex process as previously practiced and planned in the U.S. while achieving better and more predictable separations to the point that some of the product cleanup steps have been eliminated because they are not needed. These advances have been achieved while continuously reducing the amount of waste produced by the Purex process to the point that the volume of waste destined for a deep geologic repository is about the same as the volume of the parent SNF fuel. This has been accomplished through careful management of facility operations, use of chemicals that can be degraded to water, nitrogen, and carbon dioxide, and the use of compactors and incinerators.

Despite the progress in optimizing the Purex process there are some approaches used in both France and the UK that, while functional, may not be applicable in the U.S. In particular, French and British reprocessing facilities remove volatile radionuclides from their off-gas primarily by caustic scrubbing (which captures ^{3}H, some of the ^{14}C, and ^{129}I) and then releasing these

radionuclides to the sea at the end of a kilometers-long underwater pipe where they undergo massive physical and isotopic dilution.

Where is fuel refabricated?

Major LWR mixed-oxide fuel fabricators include France (MELOX, 195 MT/yr), the UK (SMP, 120 MT/yr design capacity, 40 MT/yr feasible capacity), and India (100 MT/yr). Japan is planning a 120 MT/yr plant at the Rokkasho-Mura site.

A mixed oxide (MOX) fuel refabrication plant is under construction at the Savannah River Site in South Carolina to dispose of excess weapons-grade plutonium by using it for commercial power production. This facility is being licensed by the Nuclear Regulatory Commission

ADVANCED RECYCLE TECHNOLOGY

Overview of Advanced Spent Nuclear Fuel Recycle Initiatives

The National Energy Policy (NEP) [NEP, 2001] issued by the President Bush in May, 2001 recommended expanded use of nuclear energy in the U.S., including development of advanced nuclear fuel cycles. On February 6, 2006, the Secretary of Energy launched the Global Nuclear Energy Partnership (GNEP), a comprehensive international strategy to expand the safe use of nuclear power around the world. GNEP is a broad DOE program whose goal is promoting beneficial international uses of nuclear energy through a multi-faceted approach. The domestic components of GNEP are designed to address the challenges outlined in the Introduction of this Summary.

The Russians have a proposal similar to GNEP called the Global Nuclear Infrastructure (GNI). The GNI calls for establishment of International Nuclear Centers, and hosting the first such center in Russia. The proposed Centers would provide participating nations with full "nuclear fuel cycle services," including enriching uranium, fabricating fresh uranium fuel, and storing and reprocessing spent nuclear fuel.

Advanced Fuel Reprocessing Technology

The DOE proposes using a reprocessing flowsheet called UREX (Uranium Extraction) and has currently stated they are favoring a variant called UREX+1a although there appears to be increased recent interest in UREX+2 and UREX+3. A simplified UREX+1a flowsheet is shown in Fig. S.2.

Planning, experimentation, and evaluation of the UREX +1a process is in an early stage of development (as of early 2007). Some experiments with irradiated fuel have been carried out, but there have been no lab-scale demonstrations of the entire process using SNF or large-scale testing of key equipment using non-radioactive or uranium solutions. Additionally, the difficulties associated with combining and operating continuously and in sequence the four distinctly different solvent extraction separations steps summarized above one facility have not yet been addressed. Such a facility would require extensive and expensive operator training, a very complex plant, and diverse equipment types.

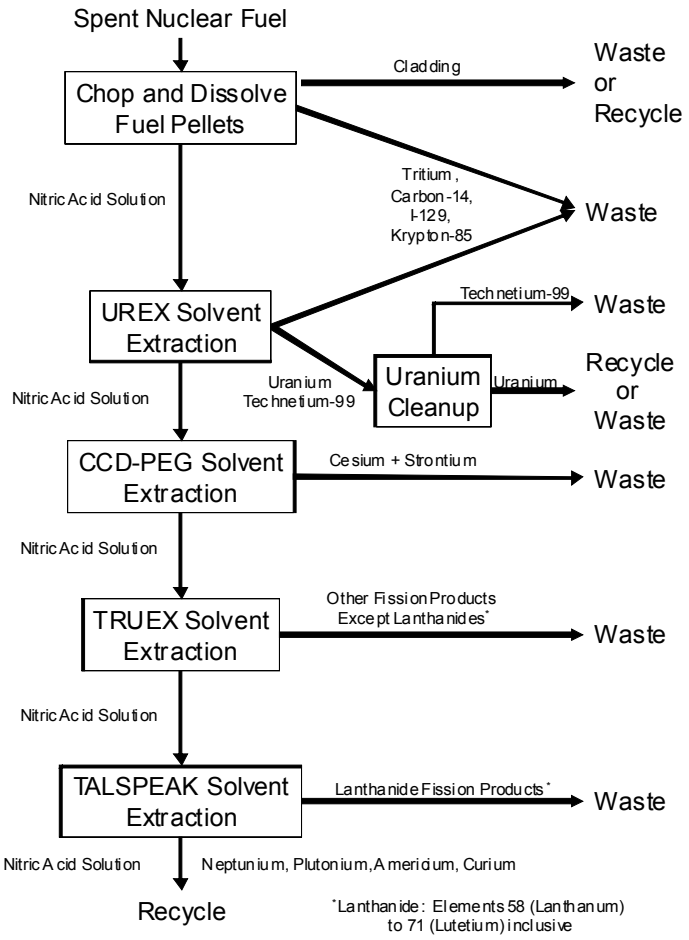

Fig. S.2 Highly Simplified Urex +1a Flowsheet

In addition to the major wastes produced by the Purex flowsheet (see earlier discussion), the UREX+1a flowsheet yields the following additional wastes:

- Technetium-99 recovered from the uranium product stream that is planned to be combined with the cladding waste and dissolver solids. This mixture will be compacted or melted to form an ingot. The disposition of this waste is uncertain.

- A Cs/Sr mixture that is to be made into an aluminosilicate waste form and stored in an engineered surface facility for the time required for it to decay to Class C levels (about 300 years) at which time the storage facility would be closed as a disposal facility with the Cs/Sr remaining in place.

Some consideration is being given to building a High-Temperature Gas-Cooled Reactor (HTGR) in the U.S. HTGR fuels are distinctly different from other reactor fuels. In particular, the fuel is made mostly of graphite, and is in one of two geometric configurations: a spherical (pebble) form and a prismatic form. Reprocessing of such fuels would be similar to reprocessing LWR fuels with one important difference: a substantial quantity of graphite must be removed by burning or crushing and sieving before the fuel matrix is dissolved in nitric acid.

In the current DOE plan pyroprocessing would be adapted to reprocessing the actinide product from UREX +1a after it had been refabricated into metallic or perhaps nitride fuel and irradiated in transmutation reactor. Pyroprocessing, which involves the use of molten salts, molten metals, and electrochemical cells to separate SNF into its constituent parts, is inherently a batch process. After repeated batch processes the molten salt used in the process accumulates impurities and must be discarded.

Advanced Fuel Fabrication and Refabrication

Current preparation of conventional pelletized reactor fuels for LWRs and fast reactors requires grinding the pellets to achieve specified size and shape. This process produces finely divided fuel particles that must be recovered and recycled. A “dust-free” sol-gel microsphere pelletization process has been developed for fabrication of $(U,Pu)O_2$, (U,Pu)C and (U,Pu)N fuel pellets containing around 15% plutonium.

REGULATION AND LICENSING OF FUEL RECYCLE FACILITIES

Under current regulations, various parts of a recycle facility would have to meet the requirements of a number of regulations. The reprocessing facility per se would be licensed under 10 CFR Part 50. Refabrication, plutonium conversion, and recovered uranium, transuranic, and Cs/Sr material storage facilities would be licensed under 10 CFR Part 70 (and also 10 CFR Part 30 for the Cs/Sr). The uranium conversion facility would be licensed under 10 CFR Part 40. The requirements of 10 CFR Part 73 (physical protection) and 10 CFR Part 74 (material control and accountability) apply to all facilities.

The primary licensing regulation (10 CFR Part 50) has evolved to be focused on licensing LWRs. It would need to be modified or exemptions to many of its requirements would be needed to be granted to accommodate the technical differences between licensing light-water reactors and recycle facilities.

In 2007 the Commission directed the NRC staff to begin developing the regulatory framework to license SNF recycle facilities using an option based on 10 CFR Part 70 by preparing:

- A technical basis documentation to support rulemaking for 10 CFR Part 70 with revisions to 10 CFR Part 50 as appropriate to eliminate its applicability to licensing a SNF reprocessing plant, and

- A gap analysis for all NRC regulations (10 CFR Chapter I) to identify changes in regulatory requirements that would be necessary to license a reprocessing facility.

Title 10 CFR Part 70 has been used to license fuel fabrication facilities and is currently the basis for reviewing the license application for the Mixed-Oxide Fuel Fabrication Plant.

ISSUES ASSOCIATED WITH LICENSING AND REGULATING FUEL RECYCLE FACILITIES

There are a number of licensing or regulatory issues that warrant consideration before receipt of a license application. The following sections identify these issues and provides insight into how they might be addressed.

Development of licensing regulation(s) for recycle facilities

Implementation of SNF recycle could involve having to review license applications for facilities that are novel in the context of the current once-through fuel cycle, including facilities for reprocessing fuels from LWRs and later for other advanced reactors, refabrication of fuels to recycle transuranic or fission product elements, or for some new reactor designs (e.g., graphite-moderated reactors), disposal of new types of wastes such as cladding and transuranic (GTCC) waste, and extended interim storage of intermediate-lived radionuclides (Cs/Sr), followed by in situ disposal.

There are important aspects of 10 CFR Part 70 and potential modifications thereto that will need to be considered for it to be an efficient and effective regulation for licensing SNF recycle facilities, such as:

- Use of an Integrated Safety Analysis (ISA): 10 CFR Part 70 calls for the use of an ISA to evaluate the in-plant hazards and their interrelationship in a facility processing nuclear materials. The Committee and the ACRS have previously recommended that a regulation based on probabilistic risk assessment (PRA) is preferable to one based on ISA because the latter has significant limitations regarding its treatment of dependent failures, human reliability, treatment of uncertainties, and aggregation of event sequences.

- Best estimate vs conservative: A companion issue to that of ISA vs. PRA approaches is whether analyses should be based on data and models that represent the best estimate of what might really occur with an associated uncertainty analysis to explore the effects of incorrect data or models, or should be based on demonstrably conservative data and models. The Committee has letters on record pointing out problems with using this approach with some of the most important being that using very conservative assumptions can mask risk-significant items, and that most conservative analyses are not accompanied by a robust uncertainty analysis.

- One-Step Construction and Operating License (COL): 10 CFR Part 70 allows for a one-step licensing process which means that the design and process details necessary to review the license application for a recycle facility would not available until relatively

late in the licensing process. SNF recycle facilities have the potential to involve equipment, chemicals, and processes that are unfamiliar to NRC staff and that could lead to multiple requests for additional information from licensees and/or extensive pre-licensing interactions between NRC staff and the licensee to identify and resolve potential licensing issues.

- Accommodating the Potential Future Diversity of 10 CFR Part 70 License Applications: 10 CFR Part 70 is also used to license many nuclear material processing facilities other than those for fuel recycle. Such facilities are typically much smaller, less costly, and less complex than anticipated SNF recycle facilities to the point that imposing requirements appropriate for recycle facilities could be unduly burdensome to some applicants.

- Risk-informed, Performance-Based[2]: A risk-informed regulatory approach is one in which risk provides an important insight for licensing a facility but where other considerations such as cost, environmental impacts, etc. can be balanced against the required extent of risk reduction. Risk-informed regulations and licensing approaches for a wide range of situations and the opportunities for focusing scarce resources on the most-risk significant items in very complex facilities would indicate its appropriateness in this instance. It is also prudent for regulations for licensing fuel recycle facilities to include provisions that allow the regulator to make exceptions on a case-by-case basis.

  A corollary factor to a regulation being risk-informed is that it is performance-based. That is, the criteria for granting a license are expressed in terms of the requirements the applicant must meet but not the means by which the applicant meets the requirement. For example, a regulation that requires that a dose limit be met is performance based but one that requires use of a specific technology is not.

- Programmatic Specificity of Changes to 10 CFR Part 70: Discussions concerning regulation of recycle facilities has been focused on DOE's GNEP and the facilities currently being proposed by DOE. The scope, functional requirements, size, and timing of these facilities is still evolving and likely to change in unknowable ways which suggests a more generic focus might be in order.

<u>Impacts of SNF Recycle on Related Regulations</u>

In addition to the need to establish the approach(es) to be used for the primary licensing regulations for fuel recycle facilities, it will be necessary to address issues that SNF recycle might raise concerning other regulations such as:

- Classification of the wastes is an important determinant of how they must be treated, stored, transported, and disposed of. Specific issues regarding waste classification include:
  - Whether the Cs/Sr waste will require a waste determination and DOE decision that it is "wastes incidental to reprocessing" (WIR) so that it would not require disposal in a deep geologic repository and criteria for reviewing a waste determination for this material.
  - The stable end point of cesium decay is stable isotopes of barium which means

[2] NRC Commission defined risk-informed regulation in their white paper, "Risk-Informed and Performance-Based Regulation" as "...a philosophy whereby risk insights are considered together with other factors to establish requirements that better focus licensee and regulatory attention on design and operational issues commensurate with their importance to public health and safety."

that the Cs/Sr waste may be a mixed waste.
- Uranium, ^{85}Kr, and ^{135}Cs could become wastes destined for near-surface disposal but they are not listed in the waste classification tables in 10 CFR Part 61.

- Determination of what constitutes an acceptable waste form and disposal technology for wastes such as cladding waste, Cs/Sr, miscellaneous wastes containing greater than 100 nCi/g TRU (e.g., equipment and analytical wastes, protective equipment, HEPA filters), and wastes containing ^{99}Tc, ^{129}I, and ^{14}C, is necessary to define how the waste must be treated. Waste form and disposal requirements also have a significant impact on the selection of recovery processes for some species such as those in gaseous effluents where technology selection remains open and release limits remain to be developed.

- Use of the any of the UREX flowsheets for recycle would change the characteristics (e.g., volumes, forms, decay heat, penetrating radiation, and radionuclide concentrations) of the wastes going to the repository. As a consequence of the foregoing, aspects of existing regulations and guidance concerning repository licensing that are driven by the waste characteristics (e.g., dominant contributors to repository risk, degradation rates of the spent fuel cladding and matrix, effects of penetrating radiation and decay heat on repository chemistry and water flow) may change substantially and new risk-significant licensing issues are likely to arise.

- The concentration of additional radionuclides present in recovered uranium as compared to unirradiated uranium in certain portions of enrichment equipment and wastes, and the penetrating radiation from ^{232}U in the recovered uranium will have to be taken into account when licensing facilities for handling recycled uranium.

- Managing Cs/Sr waste by 300-year storage followed by closure of the facility as a disposal site raises issues such as whether:
  - The Cs/Sr waste classified when it is produced or after the monitored interim storage period,
  - A near-surface facility containing radionuclides emitting considerable amounts of heat and penetrating radiation can be reliably designed, built, and maintained for as long as 300 years, and
  - Such a long-term storage facility would be suitable for conversion to a permanent disposal facility at that time and the technology to be used in such a conversion.

- Construction and operation of a fuel reprocessing plant before actinide burner reactors are available would result in the need to store significant quantities of transuranic elements raising issues such as the acceptable form and technology for storing such materials product and how best to safeguard it.

- A fundamental feature of DOE's UREX flowsheets approach is that plutonium is never completely separated from other more radioactive radionuclides. This raises issues concerning how to factor the increased radiation and difficulty in separating the plutonium into the safeguards and security paradigms that will be used in the recycle facilities, if at all.

- An important goal in licensing SNF recycle is to include design and operating requirements to minimize historical problems in decommissioning the facilities at the end of their operating life. Issues arising in this regard are obtaining sufficient lessons learned to provide a basis for decommissioning requirements to be included in

regulations concerning SNF recycle facilities and how to balance these requirements against the licensee's freedom to build the plant to efficiently and economically accomplish the principal plant mission. A separate Committee white paper is being prepared on this issue.

- The differences among IAEA, NRC and DOE on the requirements for the permissible significant (SIGMA) Pu inventory differences (ID) with regard to the Sigma ID, and the frequency of both long-term shutdown inventory and interim frequency requirements could be important to recycle facility operation and deserves further attention.

Other Regulatory Issues Arising from SNF Recycle

The following summarize issues that could arise from implementation of SNF recycle that do not directly impact NRC regulations.

- The UREX flowsheets involve at least four inter-connected processes operating in series. Each of these processes is as complex as the traditional PUREX process. This raises the issue of how to overcome the difficulty and resource requirements entailed in developing the technical capability (expertise, analytical tools) to evaluate whether such a complex system can be safely operated which involves predicting the behavior of myriad pieces of equipment and the piping connecting them under normal and accident conditions.

- Recycle facilities that are capable of meeting DOE goals will involve many processes and pieces of equipment that have never been used at a commercial scale or in a licensed facilities. When licensing facilities the NRC normally performs confirmatory research to validate key data and assumptions made by a licensee. In the case of recycle facilities, such research would require highly specialized facilities (e.g., hot cells) and equipment that is available only in a limited number of places, none of which are part of the current NRC community. The lack of NRC infrastructure relevant to SNF recycle raises the issue of how the NRC will perform confirmatory research.

- It will be necessary to create and grade licensing examinations for fuel recycle facility operators at several levels of competence and responsibility. It will be challenging to find people qualified to prepare and administer proficiency examinations.

- A number of time-consuming activities need to be completed by regulators before anticipated receipt of a license application for SNF recycle facilities, including creating the licensing regulation for recycle facilities, modifying supporting regulations, preparing guidance documents underpinning the foregoing, establishing release limits for volatile radionuclides such as ^{3}H and ^{14}C, and reconsidering of the waste classification and disposal technology system. Establishing release limits for volatile radionuclides could be particularly lengthy because of the likely need to perform engineering design, cost, and risk studies as a basis for the limits.

  The DOE also has to complete a number of time-consuming activities before it could submit a license application for a recycle facility having the full capabilities presently envisioned by DOE (i.e., using the UREX+1a flowsheet or similar). These activities include completing the development and testing of a complex four-step reprocessing flowsheet, testing equipment to implement the flowsheet, developing waste treatment processes and disposal facilities for a number of novel waste streams, completing a generic environmental impact statement for the recycle program, designing the facility,

and preparing the license application and other regulatory documents.

The time required to accomplish both the regulatory and DOE activities is likely to be at least several years but this estimate has a substantial degree of uncertainty. However, the DOE could decide to initially deploy SNF recycle facilities that do not have the full capabilities presently envisioned by DOE and then add additional modules over time to achieve the full capabilities. Such an approach is significantly less complex than implementing all the envisioned capabilities at the outset and represents only a modest extension of existing technology. As a consequence, the time required to develop and submit a license application could be significantly reduced as compared to that for a fully capable facility but the time required to undertake the required regulatory development would not be significantly reduced.

- In the 1970s when nuclear fuel recycle was being aggressively pursued efforts were undertaken to by the EPA to develop standards for radionuclide releases from recycle facilities with the results being codified in 40 CFR Part 190. From the perspective of decades of hindsight, the existing standard raises a number of issues as follows:
  - The factors by which ^{85}Kr and ^{129}I must be reduced are approximately 7-fold and 200-fold, respectively. The evaluation which led to these factors was based on effluent control technologies that were under development such development was never completed. Thus, meeting the standard with available technologies may not be not feasible.
  - Background information accompanying the standard indicated that studies concerning limits on releases of ^{14}C and ^{3}H were underway. These studies remain to be completed and, thus, the standard may be incomplete.
  - The cost-benefit approach used in the analyses involved calculating the collective dose by integrating very small doses over very large populations and distances, and comparing them to then-common metrics such as a limit of $1000/man-rem to determine whether additional effluent controls were justified. As has been observed in Committee letters and by the ICRP, such a comparison is questionable.
  - The scope of 40 CFR Part 190 does not include fabrication of fuels enriched with plutonium or actinides other than uranium.

  In summary, the EPA standard on which effluent release limits are based may impose requirements that are infeasible in the near-term, may be incomplete, and is based on analysis techniques that have become questionable over the years. This is a very fragile (if not inadequate) foundation for the NRC to develop implementing regulations and begin licensing a fuel recycle facility.

- Implementing fuel recycle will require a substantial number of staff knowledgeable about the technical and regulatory aspects of fuel recycle facility design and operation. The design and operation of the fuel reprocessing and recycle fuel fabrication facilities are particularly challenging because staff trained as nuclear chemical operators and engineers is required and few exist because there has been very limited demand for decades. This same expertise, especially that of nuclear chemical engineers, will be in demand by organizations performing fuel recycle R&D, designing and operating recycle facilities, and regulating recycle facilities thus exacerbating the demand .

- The GNEP's goals include having once-through and recycle facilities in the U.S. providing services (fuel supply, fuel take-back) as a primary component. With substantial amounts of U.S. fuel going to many other countries and being returned to the U.S., a more focused relationship between the NRC and regulators in other countries

might be desirable or necessary to ensure that U.S. fuels are acceptable internationally and that fuel irradiated in another country has an acceptable pedigree for its return.

- The DOE regulates most of its activities under its own authority while the NRC regulates licensees doing civilian and commercial nuclear activities. In the case of the projected fuel recycle facilities there is the potential for DOE regulating some facilities that interface with other NRC-regulated facilities (e.g., a fuel refabrication plant and associated waste management facilities such as at MFFP). This could pose challenges concerning compatibility and consistency of regulatory requirements, especially as it concerns material that moves between facilities, and how it is moved.

- The development and design of recycle facilities provides an excellent opportunity to educate and train NRC staff for licensing subsequent facilities and to obtain insights useful in developing or modifying NRC regulations to license these facilities. Of particular note is a stepwise end-to-end demonstration of the UREX+1a flowsheet now underway at ORNL beginning with SNF receipt and ending with refabrication of fuels containing TRU elements and use of waste materials (e.g., Tc, Cs/Sr) to develop treatment processes.

RESEARCH NEEDS

Implementation of SNF recycle in the U.S. as presently envisioned by DOE will require information that will presumably result from DOE's ongoing research and development program or international experience. However, to fulfill its role in developing regulations and later reviewing a license application for SNF recycle facilities, the NRC staff must be able to independently assess the safety of the facilities. Such an assessment requires sufficient understanding of key technical aspects of the processes and materials in the plant. In the course of becoming preparing the white paper the following research needs that are likely to be important to the NRC's regulatory role were noted:

- Knowledge of the split of each chemical species in each process step in the plant (the separation factors), especially concerning tritium, iodine, technetium, neptunium, and radioactive material associated with the cladding.

- Developing a model that simulates the interconnected equipment in a facility flowsheet using the separation factors to determine the radionuclide concentrations and inventory. Such models need to accommodate complexation, colloids, internal recycle streams, and important conditions in bulk fluids (e.g., temperature, acidity, radiolysis).

- Understanding stability of organic extractants, solvents, and ion exchange materials and the safety implications of degradation products.

- Understanding and documenting the technical status and cost of effluent control technologies and to develop a methodology for performing the cost-benefit analysis.

- Understanding the performance of potential waste forms for krypton, iodine, carbon, technetium, and Cs/Sr in likely storage and disposal environments.

- A better understanding of the strengths, limitations, and historical performance of long-term institutional controls and facility degradation rates in the context of reviewing a license application for 300 years of near-surface storage of Cs/Sr is desirable to provide a basis for these judgements.

I. INTRODUCTION

A. Background and context

The SNF from existing and future nuclear power reactors in the U.S. poses challenges as follows:

- Obtaining adequate disposal capacity for SNF and HLW: The U.S. currently has 104 operating commercial nuclear power reactors [NEI, 2007] that produce about 2100 tonnes of spent nuclear fuel each year [Kouts, 2007]. DOE estimates that the Congressionally mandated capacity limit of 70,000 tonnes of heavy metal equivalent imposed on the proposed Yucca Mountain (YM) repository will be committed to accumulated spent commercial fuel and other DOE wastes by about 2010 [DOE, 2006] leading to the need for additional disposal capacity beyond this time. It has been estimated [Kessler, 2006] that if the currently planned approach to emplacing SNF in Yucca Mountain were maintained the physical capacity of the site is 2.0 to 3.5 times the 70,000 tonne legislative limit. Thus, expansion of Yucca Mountain to its physical limits could accommodate spent fuel from an additional 33 to 83 years of operating existing nuclear power plants but proportionately less if there is additional SNF from reactors undergoing license extensions, new reactors similar to those presently deployed, and new types of advanced reactors. The characteristic of SNF that limits how much can be placed in a unit area of the repository is limited by its decay heat which is dominated by ^{90}Sr and ^{137}Cs for the first several decades and by certain transuranic actinide isotopes beyond this time with plutonium and ^{241}Am being the dominant contributors. The volume of the SNF does not drive the amount of repository area required to dispose of SNF although the volume of SNF does affect the number of storage and shipping casks that must be handled and transported.

- Increase Utilization of Available Energy Resources: The SNF from commercial power reactors contains two significant sources of fissile material that could be recovered and reused. The first is the ^{235}U remaining after the fuel that was initially contained (up to 5% of this isotope) has been depleted. The ^{235}U concentration in SNF is typically several tenths of a percent (about the same as natural uranium) and it could be re-enriched to yield some additional uranium for fuel. The second significant source of fissile material in SNF is the transuranic elements created by neutron irradiation of ^{235,238}U with plutonium being the most important because it constitutes at least 1% of typical SNF and about two-thirds of the plutonium is fissionable in the thermal neutron spectrum in LWRs.

- Avoiding the Increased Proliferation Risk from a Pure Plutonium Stream: The plutonium contained in SNF has been recovered and reused in many countries. However, the processes that have been used to recover it generate the product as a stream of pure plutonium than can be handled with little or no radiation shielding and, as a consequence, pose a proliferation risk. This proliferation risk is an undesirable aspect of existing recovery processes that has impeded the reuse of plutonium

- Reduce Disposal Risks from Key Radionuclides: SNF contains many radionuclides that could be dissolved from failed waste canisters in a closed repository, migrate to the biosphere, and constitute a risk to the public. However, only a few radionuclides have the necessary combination of longevity and mobility so as to be important contributors to risk [EPRI, 2003], most notably ^{99}Tc, ^{129}I, and ^{237}Np and its decay products. The neptunium in SNF is produced directly by neutron irradiation of ^{235}U as well as from the

decay of ^{241}Pu and ^{241}Am in the SNF that is produced by neutron irradiation of ^{238}U.

The DOE has been supporting programs to recycle SNF for a number of years. Specifically, DOE is proposing to reprocess SNF (separate it into its constituent components) with LWR fuel being the primary feedstock for the foreseeable future; reuse the recovered uranium; reuse the plutonium by making it into new reactor fuel (refabrication); destroy actinides that dominate repository risk by refabricating them into fuel or targets; irradiate the actinides in a nuclear reactor; and incorporate radionuclides that cannot be readily destroyed by irradiation into waste forms better than SNF. To address proliferation concerns, DOE proposes to reprocess the SNF using new approaches that do not produce a separated plutonium stream.

The DOE's current program for implementing its proposed approaches is the Global Nuclear Energy Partnership (GNEP). This program contemplates building three facilities: an integrated nuclear fuel recycle facility[3], an advanced reactor for irradiating Np, Pu, Am, and Cm, and a advanced fuel cycle research facility to develop the technology needed by GNEP.

In the conference report associated with the FY 2006 Energy and Water Appropriations bill [Congress, 2005] Congress directed DOE to select a site for the integrated nuclear fuel recycle facility by FY 2007 and to initiate construction of one or more such facilities by FY 2010. DOE subsequently submitted a program plan [DOE, 2006a] and a strategic plan [GNEP, 2006] providing details of their path forward and has continued to refine these plans.

Fuel recycle has the potential to require changes in the NRC's existing regulatory framework and expertise which are now structured to license light-water reactors and their associated once-through fuel cycle facilities including direct disposal of spent fuel. In recognition of this potential the Commission directed [NRC, 2006 a, b] that the Advisory Committee on Nuclear Waste and Materials (the Committee) become knowledgeable concerning developments in fuel recycle and help in defining the issues most important to the NRC concerning fuel recycle facilities.

In FY 2006 the Committee received initial briefings by Committee consultants, NRC staff, and DOE staff on fuel recycle. Based on this input the Committee decided that the most efficient way to meet the potential needs of the Commission was to prepare a white paper on fuel recycle. A group of expert consultants was chartered to do so. This paper is the result of the efforts of those consultants.

B. Goal and Purposes

The primary goal of this paper is to summarize the technical, regulatory, and legal history, status, and issues concerning SNF recycle for two purposes:

1. To provide the basis for a Committee letter to the Commission providing the Committee's initial insights on important regulatory issues that DOE's SNF recycle initiative would raise and provide recommendations on what the NRC should do to address them and when.

2. Additionally, noting that decades have elapsed since the NRC attempted to license fuel recycle facilities, the second purpose of the paper is "knowledge management": capturing the expertise of some experts (those preparing and reviewing the paper) concerning the

[3] For the purposes of this document, "recycle" involves (a) separation of the constituents of spent nuclear fuel, (b) refabrication of fresh fuels containing plutonium, minor actinides, and possibly some fission products, c) management of solid, liquid, and gaseous wastes, and (d) storage of spent fuel and wastes.

history of SNF recycle and implications for current SNF recycle programs for use by all elements of the NRC.

This paper is intended to be generic and not focused exclusively on the current U.S. program directed at implementing SNF recycle: GNEP. However, if SNF facilities regulated by the NRC are built in the U.S. they will reflect a focus on the policies, goals, and priorities of the U.S. SNF recycle program as modified in the future. As a consequence, important aspects of this paper necessarily reflect the goals and priorities of the current GNEP program and its technology selections because the future is unknowable. The impact of this focus is mitigated by the fact that the current GNEP program is significantly more ambitious than those in most other countries (France is an exception) because it proposes to separate SNF into a larger array of products and wastes than those produced or currently planned in other countries. If some of these separations are not performed, then specific portions of this paper may be academic, but it is believed that the major messages will be robust into the future.

In addition to understanding the purposes of this paper, it is equally important for the reader to understand that the paper is not intended to:

- Address the implications of advanced reactors: This paper does not address the implications of potential new power production and/or transmutation reactors (e.g., fast-neutron-spectrum reactors for fissioning TRU elements) or devices (e.g., accelerators for transmutation) to the NRC's regulations and infrastructure. This is the purview of the NRC's Advisory Committee on Reactor Safety (ACRS). The paper does briefly describe the fuels that might be used in such reactors because this is the potential feed for a reprocessing plant.

- Provide detailed recycle technology descriptions and characterization: This paper does not contain detailed descriptions of the SNF recycle science or technology, or the characteristics of internal plant streams for multiple reasons:
  - Such descriptions are not needed to accomplish the paper's goal as stated earlier.
  - Reliable details concerning the science and technology underlying GNEP recycle proposals is not available because the processes are still under development.
  - Where available, detailed descriptions of technology and internal plants streams are proprietary, sensitive for security reasons, or both, which would preclude issuing this paper as a public document.

  Detailed descriptions of historical science and technology have been included by reference.

- Provide details on pyroprocessing: If SNF recycle is to proceed, the first and largest operation will necessarily be to reprocess LWR fuel. Aqueous processes such as those currently in use internationally or advanced versions being developed in the U.S. and elsewhere are very likely to be used on LWR fuels because they were developed for this purpose. As a consequence, aqueous processes are the focus of this paper. Pyroprocesses (using molten metals and salts, and electrochemical cells to accomplish SNF separation) were conceived to reprocess metal fuels and may have application to oxides and to advanced fuels such as nitrides and carbides. A brief description of such processes is included in this paper.

- Focus on fuel fabrication and refabrication: Fabrication of new reactor fuels from the plutonium resulting from LWR fuel reprocessing and licensing of facilities for fabricating them is established practice with U/Pu oxide fuels being used in many

countries and a U.S. facility is in the licensing process as this paper is written. While inclusion of a mixture of transuranic actinides (Np, Pu, Am, Cm) does present some additional technical challenges for fabrication (e.g., much higher emission of radiation and heat), a refabrication facility for this purpose would not raise the variety of major conceptual and practical issues that SNF reprocessing does.

- Evaluate the merits of DOE's technical or programmatic approach: As stated previously, the purposes of this paper are to support preparation of a Committee letter on regulatory issues that would be raised by SNF recycle and what the NRC should do to address the issues, and to aid in capturing knowledge that is rapidly being lost because it has not been needed in the U.S. for decades. Evaluation of DOE's program is the purview of appropriate elements of the Executive and Legislative branches, independent review groups, and other interested stakeholders.

- Contain conclusions and recommendations: Conclusions and recommendations regarding the implications of SNF recycle to the NRC will be contained in a Committee letter.

C. Scope

In attempting to meet the goal and purposes stated above, this paper addresses the following topics:

- A historical overview of fuel recycle including recycle programs, reprocessing technology and facilities, and fuel refabrication technology and facilities.

- A historical overview of the siting, design, operation and material accountability of fuel recycle facilities that describes how recycle technologies were integrated into an operating facility designed to meet then-applicable (the late 1970s) regulations and some needed improvements that were evident even at that time.

- An overview of current recycle activities including ongoing U.S. and international fuel recycle programs, a brief discussion of advanced reactors and the spent fuel they would generate (which is the feedstock for recycle facilities), and discussion of the advanced fuel recycle processes that are being developed.

- A scoping calculation of the nature and characteristics of wastes that might result from GNEP's currently favored SNF reprocessing flowsheet.

- Discussion of regulation and licensing of fuel recycle facilities, including:
  - Experience with licensing two such facilities in the 1970s and earlier;
  - Discussion of regulations that might be used to license new fuel recycle facilities including existing and potential new regulations;
  - Topics related to licensing such as environmental protection requirements (primarily effluent controls) and other environmental impacts; and
  - Recent proposals by the NRC staff on how fuel recycle facilities might be licensed and Commission direction related thereto.

- A discussion of issues relevant to licensing recycle facilities, including the licensing regulation per se, potential impacts on other NRC regulations, implications to NRC expertise and infrastructure, and timing.

D. Information Sources

In addition to the many publicly available documents reviewed to prepare this white paper, other important sources of information are as follows:

- Presentation by R. G. Wymer to the 171st ACNW Full Committee, June 6, 2006, Subject: Commercial Spent Nuclear Fuel Reprocessing
- Presentation by DOE Representatives to 172nd ACNW Full Committee, July 20, 2006 Subject: Advanced Fuel Cycle Initiative (AFCI)
- L. Tavlarides trip to ANL for discussions on AMUSE code calculations, October 6, 2006
- ACNW Members trip to Hanford to tour reprocessing-like facilities, Oct 17 -18, 2006
- J. Flack and L. Tavlarides trip to Argon National Laboratory, October 24-25, 2006
- Presentations by R. G. Wymer, and L. Tavlarides to 174th ACNW Full Committee, November 15, 2006, Subject: White Paper on Potential Advanced Fuel Cycles
- Presentations by NRC/NMSS staff to 175th ACNW Full Committee, December 13, 2006 Subject: Conceptual Licensing Process for Global Nuclear Energy Partnership (GNEP) Facilities
- Presentation by GAO representative to ACNW, April 11, 2007, Subject: Scope and Methodology of the Government Accountability Office (GAO)'s Ongoing Review of the Global Nuclear Energy Partnership (GNEP) Effort.
- ACNW Member A. G. Croff attendance at briefing by DOE on GNEP waste management strategic plan in April, 2007 NAS Nuclear and Radiations Studies Board meeting
- ACNW Member A. G. Croff attendance at May 2007 NWTRB meeting to hear Jim Laidler presentation on GNEP waste streams
- Presentation by AREVA representative to 179th Committee meeting, May 16, 2007, Subject: AREVA Spent Nuclear Fuel Recycle Facilities
- Presentation by Energy solutions to 181st Committee meeting, July 19, 2007, Subject: BNFL's Reprocessing Technology
- Round table discussion with 181st Committee meeting and internal and external stakeholders, July 19, 2007, Subject: Committee White Paper on Spent Nuclear Fuel Recycle Facilities

II. RECYCLE FACILITY FEEDSTOCK: SPENT NUCLEAR FUEL DESIGNS

This section describes the uranium-plutonium and thorium-uranium fuel cycles with emphasis on the fuels that constitute the feedstock for SNF recycle facilities.

A. Overview of generic fuel cycles

1. Uranium-Plutonium Fuel Cycle

The uranium-plutonium fuel cycle starts with uranium ore. Historically the uranium has been enriched to 3 to 4.5 % in ^{235}U, although today the trend is generally to the higher enrichments, e.g., 4.5 to 5%. The enriched uranium is converted to oxide and fabricated into UO_2 pellets for use in reactor fuel. A portion of the ^{238}U in the fuel is converted to plutonium by capture of neutrons. Eventually enough plutonium is produced that it contributes substantially to the fission reaction and thus to power production in power reactors. The plutonium remaining can be separated by reprocessing the spent fuel and converted to PuO_2 which is mixed with UO_2 to produce "MOX" (mixed oxide) fuel. The advantage of this approach to fuel manufacture is that it uses the relatively abundant ^{238}U (99.275%) in uranium ore to produce fissile plutonium to replace part of the much less abundant ^{235}U (0.71 %) in the fuel.

2. Thorium-Uranium Fuel Cycle

The thorium-uranium cycle starts with thorium and enriched uranium. Neutron capture in ^{232}Th produces ^{233}U, which is fissile. In principle, when enough ^{233}U is produced it can completely replace the enriched uranium. The MSBR was projected to be a net breeder using the thorium fuel cycle. The Shippingport reactor[4] was operated on the thorium-uranium fuel cycle and attained a breeding ratio of about 1.01. The thorium-uranium fuel cycle has the potential to substantially reduce the consumption of enriched uranium for a given amount of energy produced.

B. Fuel Designs

1. Pressurized Water Reactors (PWR)

The most basic part of PWR fuel is a uranium oxide ceramic fuel pellet which is about 1 cm in diameter and 2-3 cm long. The pellets are inserted into Zircaloy cladding tubes and plugs are welded in the end thus constituting a fuel element or "rod". The tubes are about 1 cm in diameter and about 4 m long. The gap between the fuel pellets and the cladding is filled with helium gas to improve the conduction of heat from the fuel pellet to the cladding and minimize pellet-cladding interaction which can lead to fuel element failure. The fuel elements are then grouped into a square array called a fuel assembly (see Figure 1).

There are 179 to 264 fuel elements per fuel assembly and 121 to 193 fuel assemblies are loaded into a reactor core. The size of the fuel element array ranges from 14x14 to 17x17 rods in a square array. Typical PWR fuel assemblies are about 406 cm in length and 21.4 cm square. Control rods are inserted through the top and into the body of the assembly.

[4]The Shippingport (Pennsylvania) breeder reactor design for Light Water Reactors (LWRs) operating on the thorium-uranium fuel cycle was developed in the 1950s by the Naval Reactors Division of the US Atomic Energy Commission (USAEC) under Admiral Rickover.

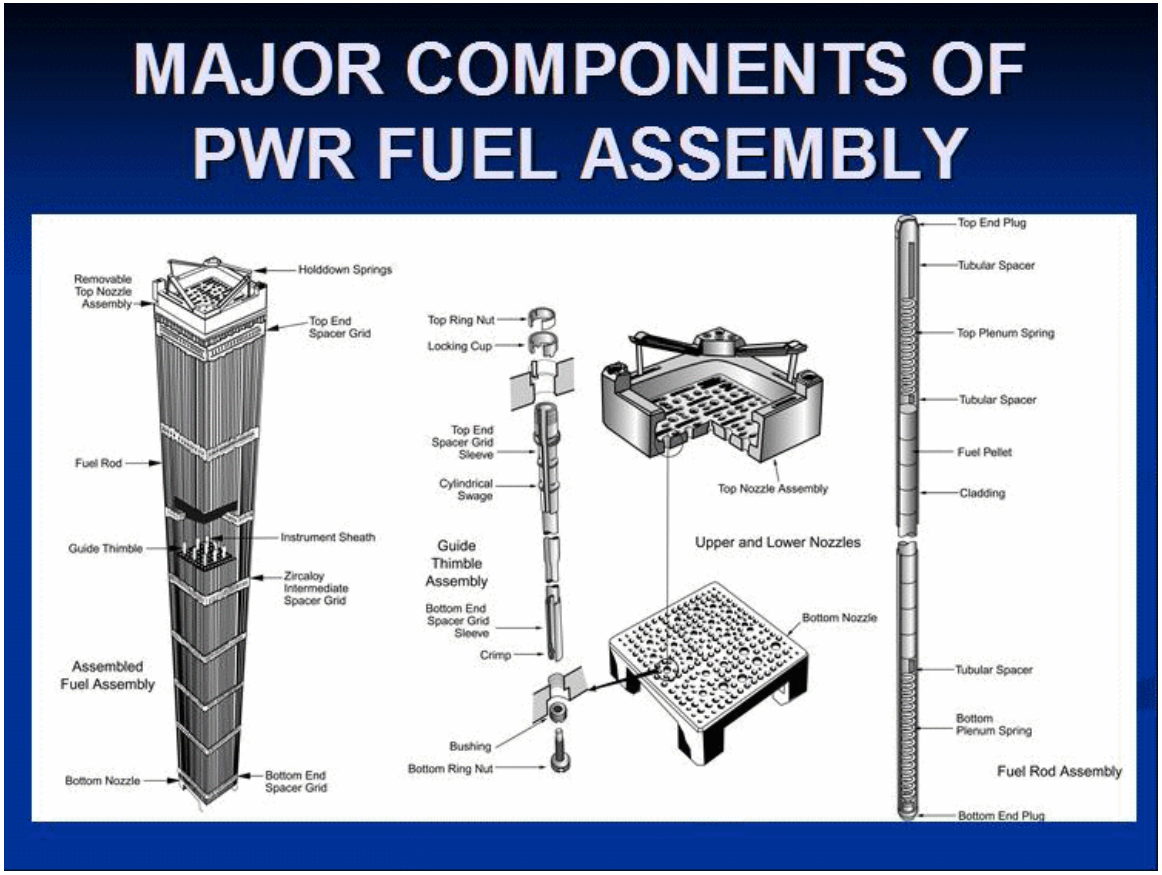

Fig. 1 PWR Fuel Assembly and Hardware

2. Boiling Water Reactors (BWR)

In a boiling water reactor (BWR) the fuel is similar to PWR fuel except that the assemblies are not as long or as big in cross section, and are "canned". That is, there is a thin metal sheath (also known as a shroud) surrounding each assembly. This is done primarily to prevent local water density variations from affecting neutronics and to control thermal hydraulics of the nuclear core. Each BWR fuel element is filled with helium to a pressure of about three atmospheres (300 kPa). A modern BWR fuel assembly is comprised of 74 to 100 fuel elements rods) that are slightly larger in diameter than those in a PWR. There are up to 800 assemblies in a reactor core, holding up to approximately 140 tonnes of uranium. The number of fuel assemblies in a specific reactor is based on considerations of desired reactor power output, reactor core size, and reactor power density. Figure 2 shows modern BWR fuel assemblies and a control rod "module." The fuel element array is typically 6x6 elements to 8x8 elements. The assemblies are 10 to 15 cm across and about four meters long.

Fig. 2 BWR fuel assembly

3. Fast Reactors

Historically, the core of a fast reactor consisted of an array of canned fuel assemblies containing a hexagonal array of fuel elements. The fuel element cladding and can are both made of stainless steel which allows these reactors to operate at higher temperatures than LWRs. When such reactors were designed to produce more plutonium than they consumed, i.e., to "breed", the core was comprised of a central region of mixed-oxide fuel (called driver fuel) that could sustain a chain reaction. Above and below the driver fuel were elements containing pellets of depleted uranium called a blanket. Additionally, surrounding the driver assemblies in the radial direction were fuel assemblies in which the fuel pellets were all depleted uranium. When these assemblies are placed together, the result is creation of a central cylindrical "driver" region surrounded on all sides by the blanket. The purpose of this configuration was to use neutrons that leaked from the driver fuel to produce plutonium in the blanket.

The fuel elements are kept apart by grid spacers or in some cases by wire wound helically along each element. Driver fuel elements are typically stainless steel tubes 6 or 7 mm in diameter. In early designs, the elements in the blanket were larger in diameter, about 1.5 cm, because they require less cooling than the fuel elements. Both fuel and blanket elements may be more tightly packed in liquid-metal- (e.g., sodium, Na/K, lead, bismuth) cooled fast reactors than in LWRs because the heat transfer properties of the liquid metal are so much better than those of water. This may not be the case for gas-cooled fast reactors.

In the GNEP concept the objective of future fast reactors is to fission as many of the transuranic elements as practical while still producing electricity. Thus, instead of producing about 10% more plutonium as would have been the case with breeder reactors, DOE is seeking to have advanced burner reactors (ABRs) consume a net 25% to 75% of the transuranic elements in fresh fuel. One consequence of this is it is unlikely that there will be any blanket fuel in the ABR and it is possible some or all of the ^{238}U in the driver fuel may be replaced by another diluent element, e.g., Zr, that does not produce plutonium.

Fast reactor fuel may be made of several different materials. The principle materials are discussed below.

a. Oxide

Oxide fuel is made up with pellets composed of a mixture of oxides of plutonium and uranium. In the ABR other transuranic elements may be included. The equivalent enrichments[5] of the fuel range between 15 to 35% depending on the reactor in question.

b. Carbide

Historically and up to the present time metallic and oxide fuels have been used in fast reactors.[6] There is, however interest in the use of fuel composed of uranium/plutonium carbide, particularly in India. Carbide fuels have a higher thermal conductivity than oxide fuels and, where plutonium breeding is of interest, can attain breeding ratios larger than those of oxide fuels. The increase in breeding ratio is due to the fact that while there are two atoms of oxygen per atom of uranium in the oxide, there is only one atom of carbon per uranium atom in the carbide. Light atoms such as carbon and oxygen tend to moderate fission neutrons, and since

[5] Uranium and plutonium isotopes are both fissionable, so it is convenient to refer to the fissile content of fuel in terms of "equivalent enrichment," i.e., with fissile characteristics as though it were all enriched uranium.

[6] An important exception is the fast reactor development program in India, which is based on carbide fuels.

there are fewer atoms per fissile atom in the carbide than in the oxide, it follows that the energy distribution of neutrons in a carbide-fueled fast reactor is shifted to higher energies than in a comparable oxide-fueled fast reactor. In addition, the density of uranium is higher.

c. U/Pu/Zr

An alloy of uranium/plutonium/zirconium (U:71 %; Pu:19 %; Zr:10 %) in stainless steel cladding has shown considerable promise as a fast reactor fuel. It has been irradiated to burnups well over 15 atom percent (Phal, 1990) with no deleterious effects that preclude serious consideration of its use, although some swelling and cladding interactions have been observed at these very high burnups.

d. Nitride

There has been interest shown in using uranium and/or plutonium nitride in fast reactors for many of the same reasons that carbide is attractive as a fuel. DOE is developing such fuels. An important disadvantage of nitride fuels is that they can form significant amounts of ^{14}C by neutron capture in the ^{14}N isotope of the nitrogen component. In order to overcome this problem it would be necessary to perform a nitrogen isotope separation to remove the bulk of the ^{14}N.

A drawing of typical historical fast breeder reactor fuel assembly is shown in figure 3. Fuel designs for the ABR are still evolving.

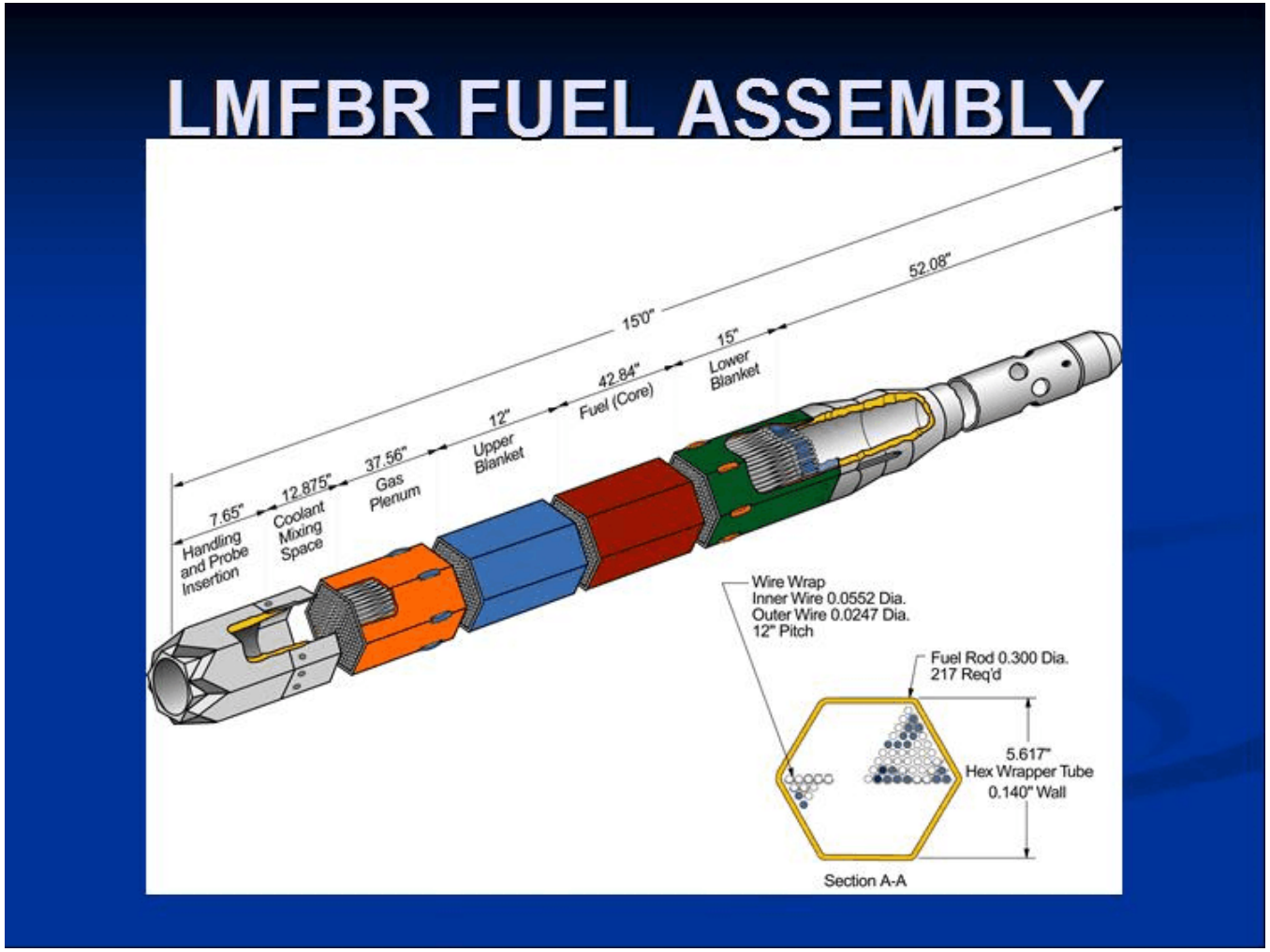

Fig. 3 LMFBR Fuel Assembly

4. High-Temperature Gas-Cooled Reactors (HTGR)

There are two types of HTGR fuel assemblies: spherical (called pebbles) and prismatic blocks. The former were developed in Germany in connection with the AVR and the first German HTGR power plant, the THTR 300.[7] Currently pebble bed fuel assemblies are being used in the experimental reactors HTR-10 in China and in Russia. The HTTR in Japan is based on prismatic fuel forms. Prismatic fuels were developed in the U.S. by General Atomics and were used commercially in the 330 Mwe Fort St. Vrain reactor.

In both cases the fuel matrix is composed of compounds of uranium and thorium or plutonium in the form of a ceramic (usually oxides, oxycarbides, or carbides). The fuel "element" in both cases is a "triso" fuel microsphere which is typically about one millimeter in diameter. TRISO fuel typically consists of a fuel kernel containing the fuel matrix in the center, coated with four layers of material. The four layers are a porous graphite buffer layer whose porosity provides space for fission gases, followed by a dense inner layer of pyrolytic carbon (PyC), followed by a ceramic layer of SiC to retain fission products at elevated temperatures and to give the TRISO microsphere more structural integrity, followed by a dense outer layer of PyC. TRISO fuel microspheres are designed to not crack due to the stresses from processes (such as differential thermal expansion or fission gas pressure) at temperatures beyond 1600°C, and therefore can contain the fuel and fission products in the worst accident scenarios in a properly designed reactor. See Sect. III.B.3 for a detailed discussion of HTGR fuel fabrication. These fuel microspheres are enclosed in graphite "pebbles" or prismatic graphite blocks that act as the primary neutron moderator.

5. Molten Salt Reactor (MSR)

The MSR is a unique reactor concept. It does not use a solid fuel. Instead, it uses a molten fluoride salt fuel that circulates in a loop. The loop contains a heat exchanger to extract fission energy and a system that removes fission products, primarily lanthanides and noble gases, whose presence would "poison" the salt (i.e., would capture neutrons) and ultimately prevent fission from occurring. The fuel for the Molten Salt Reactor Experiment (MSRE) was $LiF\text{-}BeF_2\text{-}ZrF_4\text{-}UF_4$ (65-30-5-0.1). A graphite core moderated the neutrons. The secondary coolant was F-Li-Be ($2LiF\text{-}BeF_2$). The reactor operated at a peak temperature of 650°C and operated for the equivalent of about 1.5 years of full power operation.

The culmination of the Oak Ridge National Laboratory research during the 1970-76 time frame resulted in a MSR design that would use $LiF\text{-}BeF_2\text{-}ThF_4\text{-}UF_4$ (72-16-12-0.4) as fuel. It was to be moderated by graphite with a 4 year replacement schedule, to use $NaF\text{-}NaBF_4$ as the secondary coolant, and to have a peak operating temperature of 705°C. However, to date no commercial molten salt reactors have been built.

[7] South Africa has a modular pebble bed reactor under active development.

III. OVERVIEW OF SPENT NUCLEAR FUEL RECYCLE

A. Reprocessing Experience and Evaluations

A great deal of the technical information needed for reprocessing spent nuclear fuel and for fuel recycle in general has been available for many years and may be found in the publicly available literature. The general references at the end of this paper are indicative of the amount of detailed information available and the very long time it has been available. Notwithstanding this wealth of literature information there is another component of knowledge that is related to operating experience that cannot be conveyed in any way other than operating actual fuel cycle facilities. Some information on early fuel cycle evaluations and the current or formerly operating recycle facilities is presented in what follows.

1. U.S. Defense and Commercial Reprocessing Plants

In the post-World War II years spent fuel reprocessing to recover plutonium for use in weapons and highly enriched uranium from naval reactor fuel was still carried out for many years in DOE (formerly the AEC) operated government facilities.

a. Reprocessing for Weapons Plutonium Recovery

Large-scale reprocessing of irradiated nuclear reactor fuel to recover plutonium for use in nuclear weapons began in the United States following the second World War and continued until the 1980s. Reprocessing was carried out in large government–owned plants located in Richland, WA and Savannah River, SC for plutonium production. A plant was also constructed at Idaho Falls, ID to recover uranium from spent naval reactor fuels. The earliest large-scale plutonium recovery process was the *bismuth phosphate process* which was a multi-step precipitation process developed by G. Seaborg and co-workers in very small-scale laboratory experiments and carried directly into large-scale production at the Hanford site in Richland, WA. It was soon replaced with a succession of solvent extraction processes that were much simpler to operate and more efficient. These processes and subsequent approaches used to manage them (e.g., neutralization of acidic wastes) did, however, produce copious amounts of waste, both liquid and solid and radioactive and non-radioactive. Millions of gallons of highly radioactive liquid waste (HLW) were stored in large "single-shell" and "double-shell"[8] tanks on the Hanford and Savannah River sites. Most of this waste still resides in the tanks as sludge and caked salt, although efforts are underway to remove and vitrify it.

i. Bismuth Phosphate Process

The Bismuth Phosphate Process for extracting plutonium from irradiated uranium was demonstrated in a pilot plant built beside the Oak Ridge X-10 Reactor in 1944. At production scale the process produced a large amount of highly radioactive waste that contained all of the uranium in the SNF, and the bismuth phosphate process was soon replaced by a solvent extraction process. (See the following section.) The process was designed to recover plutonium from aluminum-clad uranium metal fuel. The aluminum fuel cladding was removed by dissolving it in a hot solution of sodium hydroxide. After de-cladding, the uranium metal was dissolved in nitric acid. The plutonium at this point was in the +4 oxidation state. It was then carried from solution by a precipitate of bismuth phosphate formed by the addition of bismuth

[8] The terms single-shell and double-shell refer to whether the tanks had only one wall and bottom or whether they were, in effect, a tank within a tank. Many of the single-shell tanks have developed leaks to the sub-soil.

nitrate and phosphoric acid. The supernatant liquid (containing many of the fission products) was separated from the precipitate which was then dissolved in nitric acid. An oxidant such as potassium permanganate was added to convert the plutonium to soluble PuO_2^{2+} (Pu VI). A dichromate salt was added to maintain the plutonium in the +6 oxidation state. The bismuth phosphate was then re-precipitated, leaving the plutonium in solution. Then an iron salt such as ferrous sulfamate[9] was added and the plutonium re-precipitated again using a bismuth phosphate carrier precipitate as before. Then lanthanum and fluoride salts were added to create a lanthanum fluoride precipitate which acted as a carrier for the Pu. Repeated precipitations and dissolutions were used to remove as many impurities as practical from the plutonium. The precipitate was converted to oxide by the addition of a chemical base and subsequent calcination. The lanthanum-plutonium oxide was then collected and plutonium was extracted from it with nitric acid to produce a purified plutonium nitrate solution[10].

ii. Redox Process (Hexone)

The Redox Process was a solvent extraction process used in defense SNF reprocessing facilities of the 60s and 70s. It was a process wherein an acidic aqueous solution containing the dissolved spent nuclear fuel was contacted with an essentially immiscible organic solvent (methyl isobutyl ketone) that preferentially removed uranium and plutonium (and, if desired, other actinides) from the aqueous phase. Many of the solvents employed early (such as Hexone) had significant drawbacks, such as high flammability, susceptibility to chemical and radiation damage, volatility, excessive solubility in water, high viscosity, and high cost. Solvents used in early large-scale reprocessing plants included methyl isobutyl ketone (Hexone) which was used at the Hanford plant in Richland, WA, and β,β'-dibutoxydiethylether (Butex) which was used by the British. Bis-(2 ethylhexyl) phosphoric acid (HDEHP) has been used in smaller scale applications.

The REDOX process was developed at Hanford in the late 1940s to replace the bismuth phosphate process and was used in the site's REDOX plant (also known as the S Plant) from 1951 through June 1967. The REDOX Plant processed over 19,000 metric tons of irradiated fuel. Hexone has the disadvantages of requiring the use of a salting reagent (aluminum nitrate) to increase the nitrate concentration in the aqueous phase and thus promote plutonium extraction into the Hexone phase, and of employing a volatile, flammable extractant. The aluminum nitrate salting agent substantially increased the volume of HLW. The Hexone, besides presenting a hazard, is degraded by concentrated nitric acid, leading to more waste as well as decreasing extraction efficiency. The REDOX process was replaced by the PUREX process.

iii. PUREX Process

These early solvents were soon replaced by tributyl phosphate (TBP), a commercially available solvent without many of the drawbacks of the other solvents. In practice TBP is diluted about two-to-one (~30 % TBP) with long-chain hydrocarbons (e.g., purified kerosene or dodecane) to produce a solution with properties optimized for selectively extracting actinides. The aqueous phase in the extraction process typically is a nitric acid solution containing uranium, plutonium, neptunium, americium, curium, and fission products, most notably, cesium, strontium, iodine,

[9] Ferrous sulfamate was chosen because the ferrous ion reduced the plutonium to inextractable Pu (III) and the sulfamate ion reacted to destroy any nitrous acid present. Nitrous acid had a deleterious effect on the uranium-plutonium separation process.

[10] It should be noted that large amounts of non-volatile salts were added in the bismuth phosphate process, resulting in a large salt residue in the waste. In modern solvent extraction plants great care is taken to eliminate as many non-volatile salts as possible.

technetium and the rare earth elements (lanthanides). The plutonium and uranium (and if desired other actinides by suitable valence adjustments) extract selectively into the TBP phase as complex chemical species containing nitrate ions and TBP. Adjustments of the acidity of the solution and of the valence of plutonium [from Pu(IV) to Pu(III)] make possible its subsequent separation (in a process called "stripping") from uranium. Adjustment of the valence of Np controls its extraction.

Adoption of the PUREX process for the production of plutonium at the Hanford and Savannah River plants for the U.S. weapons program was a major advance in irradiated fuel reprocessing. It proved to be so successful that it was adopted commercially and is the only large-scale process now used commercially for spent nuclear fuel reprocessing. It has many years of demonstrated excellent performance. However, the PUREX process produces a pure plutonium stream. This may be considered to be a major drawback because of the nuclear weapons proliferation potential presented by separated and purified plutonium. This drawback is a major impetus for development and adoption of new processes such as the proposed U.S's UREX processes and the French GANEX process discussed in Sect. VI below. It is unlikely, however, that PUREX will be supplanted commercially for many years, and adoption of improved processes will likely be evolutionary rather than revolutionary.

In the past a drawback to the PUREX process was that it produced a relatively large amount of radioactive waste because plutonium reducing agents containing inorganic materials such as iron compounds were used, and because the tributylphosphate (TBP) extractant contains the phosphate ion whose radiolytic and chemical decomposition products are significant waste formers. This disadvantage was not considered to be of much importance for weapons production, but has attracted a great deal of attention in recent years in commercial plants.

In modern plants degradable reagents are used for plutonium reduction. Steam stripping is used to remove entrained TBP and the kerosine diluent from aqueous product streams. This avoids the need for diluent washing and reduces the amount of material available to degrade the phosphate radical. It also helps prevent the conditions required for the potentially explosive "red oil" production (see Sect. VI.A.4). A highly simplified flowsheet for the PUREX process is shown in Figure 4.

Additional details of the PUREX process as carried out in the THORP plant in the U.K. and the La Hague plant in France are presented in Section III.A.3 and III.A.4, respectively.

A detailed discussion of the Purex process that was to be used in Barnwell Nuclear Fuel Plant (BNFP) is given in Appendix A. It should be noted that many advances have been made in the Purex process since the time of the BNFP, and the discussion is presented primarily for historical reasons.

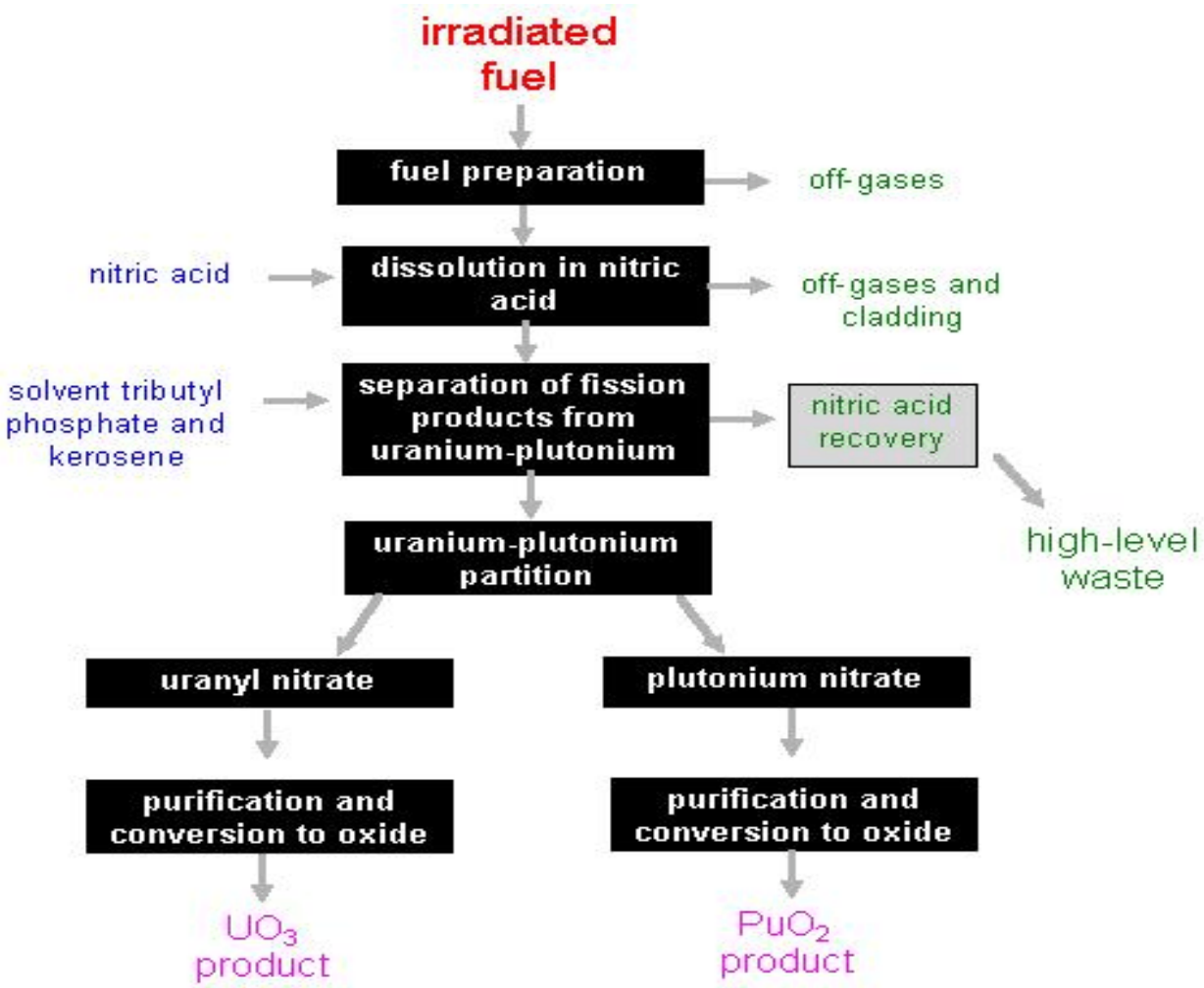

Fig. 4 Purex process flowsheet

b. U.S. Commercial reprocessing plants

In the early days of enthusiasm for nuclear energy in general, and spent nuclear fuel recycle in particular, the U.S. government encouraged commercial spent fuel recycle both in the U.S. and overseas. As a consequence there were several fuel reprocessing initiatives in the U.S. These are discussed briefly below.

i. Nuclear Fuel Services (NFS - West Valley Plant) – operated and being decommissioned

The Nuclear Fuel Services (NFS) West Valley reprocessing plant was a 300 metric tons of heavy metal/yr plant that operated in western New York from 1966 until 1972 [West Valley, 1981]. Using the PUREX Process the West Valley plant reprocessed about 650 metric tonnes of initial metal (MTIHM), about 390 tons of which was metallic fuel from the Hanford plutonium production reactors. Consequently the fuel had a very low burnup of around 2000 Mwd/tonne (to be contrasted with burnups of 45,000 Mwd/te for today's LWR fuel). The remainder of the fuel reprocessed at the West Valley plant was uranium oxide fuel and fuel containing thorium. Because of seismic concerns and other issues that would have resulted in greatly increased cost, a planned expansion of the capacity of the West Valley plant was abandoned and the plant was closed.

ii. GE Morris, Il Plant – never operated

In 1967 the Atomic Energy Commission (AEC) authorized General Electric Co. to build a reprocessing plant in Morris, IL. It was to employ a novel reprocessing method based on the volatility of uranium hexafluoride to separate uranium from fission products and actinides. However, design and operational problems during process testing caused GE to halt construction of the plant before it processed any spent fuel. However, it was radioactive as a result of testing being performed using uranium. Its spent fuel storage pond is currently used as an independent spent fuel storage installation (ISFSI) to store commercial spent nuclear reactor fuel.

iii. Barnwell Nuclear Fuel Plant – nearly completed; never operated

Construction of the Barnwell Nuclear Fuel Plant (BNFP) in Barnwell, SC, near the DOE Savannah River site, began in 1970. The projected plant capacity was to be1500 MTIHM/yr. The plant design, which incorporated redundant cross piping to accommodate possible piping failures, was based on the PUREX process and is discussed in detail in an Appendix A. In 1976 President Ford announced that "...reprocessing and recycling plutonium should not proceed unless there is a sound reason..." Presidents Carter's veto in 1978 of S.1811, the Energy Research and Development Administration (ERDA) Authorization Act of 1978, and his decision to defer indefinitely commercial spent fuel reprocessing effectively ended any chance for commercial operation of the plant, and it was abandoned before operating with spent fuel (thus avoiding costly decommissioning).

2. International Reprocessing Plant Summary

Although the U.S. discontinued attempts at commercial spent fuel reprocessing in the mid-1970s this did not deter construction and operation of reprocessing facilities worldwide. Table 1 [ISIS, 2007] summarizes the capacity of civil (non-weapons) reprocessing plants that are operating or planned.

Table 1 Civil Reprocessing Plants Operating and Planned in Other Nations

Country	Location	Scale	Rated Capacity, te HM/yr	Feed Material
China	Lanzhou*	Pilot Plant	0.1	PWR, HWRR
France	1. LaHague UP2-800	Commercial	850	LWR
France	2. LaHague UP3	Commercial	850	LWR
India	1. Kalpakkam Reprocessing Plant (KARP)	Demonstration	100	PHWR
India	2. Lead Minnicell Facility (LMF)	Pilot Plant	n/a	FBTR
India	3. Power Reactor Fuel Reprocessing Plant (PREFRE)	Demonstration	100	PHWR, LWR
India	4. Fast Reactor Fuel Reprocessing Plant*	Commercial	n/a	FBTR
Japan	1. Rokkasho Reprocessing Plant	Commercial	800	LWR
Japan	2. JNC Tokai Reprocessing Plant	Demonstration	210	LWR
Russia	1. Research Institute of Atomic Reactors (RIAR)	Pilot Plant	1	n/a
Russia	2. RT-1, Combined Mayak	Commercial	400	VVER-440
U.K.	1. BNFL B205	Commercial	1500	U Metal (Magnox)
U.K.	2. BNFL THORP	Commercial	1200	LWR, AGR Oxide

* Undergoing commissioning.

Table 2 [ISIS, 2007] lists civil reprocessing plants that have operated in the past and which have

been or are being decommissioned. Note the relatively large number of pilot plants built by the major reprocessors before proceeding to large-scale reprocessing plants. This indicates the desirability of such facilities to test integrated flowsheets before plant construction and to optimize large-scale plant operations. Both France and the UK built pilot plants based on work with small-scale tests using fully irradiated fuel. Larger scale demonstration work was almost exclusively related to chemical engineering development with little or no radioactivity present other than possibly uranium.

Table 2 Decommissioned Civil Reprocessing

Country	**Plant**	**Scale**	**Design Capacity, te/yr**	**Feed Material**
France	1. Experimental Reprocessing Facility	Pilot Plant	5	
France	2. LaHague - AT1	Pilot Plant	0.365	
France	3. Laboratory RM2	Laboratory	0	
France	4. Marcoule - UP1	Commercial	600	Gas-cooled reactor fuels
France	5. La Hague: UP2-400	Commercial	400	Gas-cooled reactor and LWR
Germany	Weideraufarbeitungsanlage (WAK)	Pilot Plant	35	MOX, LWR
Italy	Eurex SFRE* Pu Nitrate Line)	Pilot Plant	0.1	$Pu(NO_3)_4$
Japan	JAERI's Reprocessing Test Facility (JRTF)	Laboratory	-	
U.K.	BNFL B204 Reprocessing Plant	Defense	-	
U.K.	BNFL B207 Uranium Purification plant	Defense	-	
U.K.	BNFL THORP Miniature Pilot Plant (TMPP)	Pilot Plant	-	
U.K.	UKAEA Reprocessing Plant, MTR	Defense	0.02	MTR
U.K.	UKAEA Reprocessing Plant, MOX*	Defense		

* Standby. Plants are in decommissioned status unless otherwise noted. Not all decommissioned facilities are listed, e.g., Eurochemic in Belgium and U.S. commercial facilities discontinued in the 1970s (NFS, GE Morris, BNFP) are omitted.

a. France

France has the largest LWR SNF reprocessing enterprise in the world. Commercial reprocessing is carried out at La Hague on the English Channel. La Hague reprocesses spent nuclear fuel from reactors belonging to French, European and Asian electricity companies. AREVA NC La Hague (formerly COGEMA) has two operating reprocessing plants at this site (UP2-800 and UP3) each having a design throughput of 850 metric tons of spent fuel per year. Uranium dioxide, MOX, and research and test reactor fuels can be reprocessed at La Hague. For more than 10 years La Hague reprocessing was split between the requirements of the French nuclear program (France's 58 nuclear power plants, generating 76% of the country's electricity) and those of the 29 European and Japanese power companies that have reprocessing agreements with AREVA NC. Power companies from seven countries have sent or are sending spent fuel to AREVA NC La Hague (France, Japan, Germany, Belgium, Switzerland, Italy, and the Netherlands). From 1990 to 2005, close to 20,000 metric tons of fuel were reprocessed at the La Hague site.

The UP1 reprocessing plant at Marcoule, commissioned in 1958, reprocessed 18,600 metric tons of spent fuel from gas-cooled reactors and research reactors to recover the reusable nuclear materials (uranium and plutonium). The site, located in southern France close to the Rhone river, reprocessed spent fuels for Commissariat à l'Ènergie Atomique (CEA) needs (G1, G2, G3 reactors and Chinon 1). France's commercial activities were initiated on the site in 1976, when UP1 began reprocessing spent fuel from the French GCRs natural uranium-fueled reactors, which were graphite-moderated, gas-cooled reactors. COGEMA was created the same year, and took over the operation of the UP1 plant. Production in the UP1 plant was terminated at the end of 1997 after 40 years of operation. Since 1998 the plant has been undergoing final shutdown operations, to be followed by retrieval and repackaging of waste, then by dismantling and decommissioning the plant.

b. Great Britain

Great Britain is the second largest reprocessor of power reactor spent fuel in the world. Reprocessing is carried out at the Windscale/Sellafield plant in the north-west of England on the Irish Sea. Civilian reprocessing began at Windscale in 1964, and is expected to continue until at least 2015, about five years after the shut down of the last Magnox reactor in Britain. Magnox power-reactor fuel has been reprocessed at Windscale/Sellafield since 1964. Oxide fuel reprocessing began in 1969. Large scale oxide fuel reprocessing began with the commissioning in 1994 of the Thermal Oxide Reprocessing Plant (THORP; nominal capacity: 1200 metric tons fuel per year). About 70 percent of the first ten years' reprocessing at THORP was dedicated to foreign fuel. The British utility, British Energy, holds contracts to reprocess about 2600 metric tons of fuel, while additional contracts for 700 metric tons of fuel were signed by German utilities in 1990. In early 2005 THORP had processed almost 6000 metric tons of spent nuclear fuel containing about 1.7 billion curies of radioactivity. A diagram of the main THORP Chemical Separation processes as it exists today is shown in Fig. 5.
Detailed information on THORP Process Chemistry was provided by Energy Solutions for inclusion in this report and is presented in Sect. III.3.

Fast reactor and materials test reactor (MTR) fuel has been reprocessed at Dounreay in northern Scotland since July 1958. This small reprocessing facility is now shut down and is undergoing decommissioning.

c. Japan

Japan has a small reprocessing plant at Tokai-mura, with a design capacity of about 270 metric tons per year (0.7 te/day). (The actual annual reprocessing rate has been about 100 te/yr.) Construction of Japan's first commercial reprocessing plant has been completed at Rokkasho-mura and testing for commercial start-up is underway. The plant, which is primarily of French design, includes a number of buildings for the head-end process, separation and purification, uranium and plutonium co-denitration, high-level radioactive waste vitrification, and other processes related to spent fuel recycle. The plant includes many French process improvements to the PUREX process. The nominal reprocessing capacity of the plant is 800 tonne U/year, enough to reprocess the spent fuel produced by about thirty1,000 Mwe nuclear power stations.

d. Russia

The primary Russian reprocessing activity is at Mayak. The Mayak nuclear fuel reprocessing plant is between the towns of Kasli and Kyshtym (also transliterated *Kishtym* or *Kishtim*) 150 km northwest of Chelyabinsk in Siberia. The plant is part of the Chelyabinsk Oblast.

In 1948 reprocessing irradiated fuel from the Russian plutonium production reactors began at the Mayak plant. The plant underwent several modernizations and continued operation until the early 1960s. Reprocessing irradiated fuel from the production reactors was continued at a second plant located next to the first. (The second plant subsequently was combined into a single industrial area called 235.) The second plant was adapted to extract isotopes from irradiated targets from the Chelyabinsk-65's isotope production reactors. In 1987, after two out of five production reactors were shut down, the second reprocessing plant was shut down.

Plant RT-1 was commissioned in 1977 to reprocess spent fuel from VVER-440, BN-350, BN-600, research, and naval propulsion reactors. Most of the feed is from VVER-440 reactors. This is the only Russian facility that reprocesses spent power reactor fuel. The plant's nominal reprocessing capacity (based on spent fuel from the VVER-440 reactors) is 400 tons per year. The historical average throughput of spent fuel at RT-1 is estimated to be 200 MT of heavy metal per year. Since 1991 reprocessing of foreign spent fuel has become the main source of revenue for Mayak, and has served to cover the cost of domestic spent fuel reprocessing. Until 1996, Mayak Production Association had contracts with nuclear utilities from Finland, Germany, Hungary, Ukraine, and Bulgaria. By 1996, however, Bulgaria, Germany, and Finland had stopped using Mayak's services.

e. India

Three reprocessing plants with a total design capacity of about 200 metric tons, none of which is safeguarded by IAEA, are operated by the Indian Department of Atomic Energy (DAE). The first Indian reprocessing plant, at the Bhabha Atomic Research Centre (BARC) at Trombay, began operating in 1964 and has processed fuel from the Cirus and Dhruva research reactors. It was decommissioned in 1973 due to excessive corrosion, then refurbished and put back into service in 1982.

A second reprocessing plant, the Power Reactor Fuel Reprocessing (PREFRE) facility, dedicated to reprocessing CANDU Zircaloy-clad oxide power reactor fuel, was brought into operation at Tarapur in 1982. The design capacity of PREFRE is 100 metric tons of fuel per year. However, production at the plant has been constrained by logistical and technical problems. Furthermore, India has sought to avoid building plutonium stockpiles. In 1995, there was a serious leak of

radioactivity at the waste immobilization plant associated with the Tarapur plant.

In March 1996 cold commissioning (operation without actual spent fuel) began at the Kalpakkam Reprocessing Plant (KARP) located at the Indira Gandhi Centre for Atomic Research (IGCAR) near Madras. 'Hot' commissioning, with the introduction of spent fuel, was planned for the end of 1996. Originally this site was planned to have 1,000 tons/year of reprocessing capacity by the year 2000, but these plans are now in limbo. The facility is currently designed to have a capacity of 100 metric tons of CANDU fuel per year, for an annual output of about 350 kg of plutonium.

f. China

China plans to reprocess spent nuclear fuel, stating: "China will follow Japan's lead and use the separated plutonium to fuel fast-breeder reactors." (Kitamura, 1999) China also plans to recycle mixed-oxide (MOX) fuel for use in its pressurized water reactors (PWRs) and fast reactors. The China National Nuclear Corporation (CNNC) has announced plans to construct a facility to reprocess spent fuel with a capacity of 400-800 tons per year, and China has pledged that its new plutonium extraction facilities will be open to international inspections. At present China has a 0.1 tonne/yr pilot plant undergoing commissioning at Lanzhou for commercial spent fuel reprocessing.

g. South Korea

It is not anticipated that South Korea will actually reprocess spent fuel or produce separated plutonium. However, South Korea has a collaborative reprocessing program with Canada to develop the DUPIC process. The DUPIC program is the subject of South Korea's national case study for the IAEA's INPRO[11] project, evaluating new fuel cycle technologies. The DUPIC process involves taking spent fuel from light water reactors, crushing it, heating it in oxygen to oxidize the UO_2 to U_3O_8 (thus changing its crystal structure and pulverizing it) and drive off about 40% of the fission products, (principally I, noble gases, tritium, Cs and Tc) and re-fabricating it into oxide fuel for pressurized heavy water reactors (PHWRs). The recycled fuel still contains all the actinides, including a plutonium content of nearly 1% and about 96% of the uranium in the initial PWR fresh fuel, which typically contains several tenths of a percent U-235. Thus, the fissile content ($^{239, 241}Pu$ plus ^{235}U) is around 1.5% - more than double that of natural uranium (0.71 % ^{235}U), and suitable for use in today's Pressurized Heavy Water Reactors (PHWR).

3. THORP Reprocessing Plant PUREX Process

The THORP chemical separation plant was designed and constructed during the 1980s and early 1990s with a nominal capacity of 1200 metric tons of SNF per year. The head end facilities went into hot operation in 1994 and the chemical plant followed in January, 1995. What follows is an overview of the process chemistry of the chemical separation facilities in the THORP at Sellafield (see Fig. 5) [Phillips, 2007; THORP, 2006; THORP, 1990a; THORP, 1984; THORP, 1992; THORP, 1990b; THORP,1993; THORP, 1999a; THORP, 2000; THORP, 1999b]. This overview emphasizes the extraction behavior and downstream redox consequences of ^{99}Tc and

[11] INPRO is an IAEA program whose goal is to provide a "Methodology for Assessment of Innovative Nuclear Energy Systems as based on a defined set of Basic Principles, User Requirements and Criteria in the areas of Economics, Sustainability and Environment, Safety, Waste Management, Proliferation Resistance and recommendations on Cross Cutting Issues."

manipulation of neptunium valence which enables the effective decontamination of the uranium and plutonium products in only two solvent

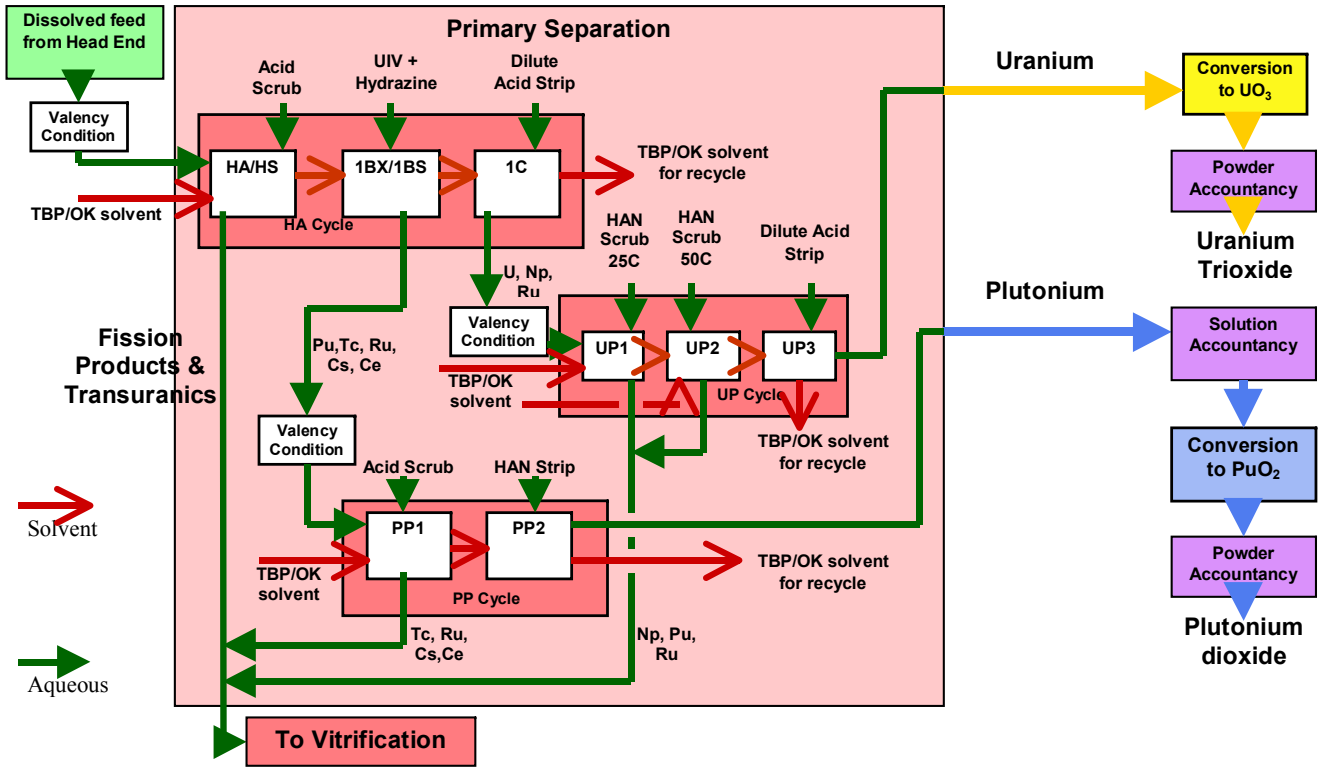

Fig. 5 THORP Reprocessing Plant Chemical Process Flowsheet

extraction cycles each. This reduction in number of cycles reduces capital and operating costs, and also reduces the amount of waste. The use of salt-free (degradable to nitrogen, oxygen, and water) redox reagents also allows nearly all wastes to be evaporated to a small volume and vitrified.

a. Spent Nuclear Fuel Shearing and Dissolution

Spent nuclear fuel is sheared into 1-2 inch long segments and the fuel matrix is dissolved in one of three batch dissolvers in the Head End plant. The dissolver solution is clarified by the removal of undissolved fission products in one of two centrifuges and then sent on to a series of three buffer tanks of about 70 m^3 capacity each. Here the dissolver solution is adjusted to 250 g uranium per liter and 3M nitric acid, and treated with nitrogen oxides to ensure all the plutonium is in the extractable [IV] valence state. Ideally the neptunium should be in the inextractable Np(V) state so that it is not extracted (i.e., it follows the fission product waste). In practice, about 67% is in the extractable Np(VI) state.

b. HA Cycle

The dissolver solution enters the HA pulse column at its mid point and flows downward against an upward flowing stream of 30% TBP in odorless kerosene (TBP/OK). The uranium and plutonium quantitatively extract into the TBP/OK. About 67% of the neptunium also extracts. Almost 100% of the technetium extracts as a complex with zirconium.

The loaded solvent passes to the scrub section of the HA column and then onto the HS hot scrub pulse column, operated at 50°C to provide maximum decontamination from ruthenium. The aqueous scrub solution is recycled to the HA column where it joins the dissolver solution and exits the bottom of the column as the HA aqueous raffinate[12] (HAAR). The raffinate is steam stripped to remove organics, evaporated and sent to be vitrified.

The solvent containing U and Pu flows to the 1BX pulse column where it is contacted with an aqueous solution of U(IV) that has been chemically stabilized with hydrazine nitrate. This reduces the plutonium to the Pu(III) state so that it transfers to the aqueous phase. Under these conditions the technetium also transfers almost completely to the aqueous phase, but ~64% of the neptunium in the feed stays with the uranium in the solvent. Some uranium also transfers to the aqueous phase, so this phase passes to the 1BS pulsed column where the uranium is re-extracted and recycled back to the 1BX column. The aqueous solution of plutonium, technetium and traces of uranium and neptunium go forward to the plutonium purification (PP) cycle. The U[IV]/hydrazine reductant is "salt free" in that it disappears after use into gaseous products (hydrazine) and uranium. This allows all wastes to be concentrated into a small volume and vitrified.

The uranium-loaded solvent, together with the bulk of the neptunium, goes to the 1C Mixer

[12] Raffinate is the term commonly given to the waste stream from a separation process. In solvent extraction processes it is the more dense aqueous stream containing waste materials. However, some confusion may arise in the use of the term when there is an aqueous "waste" stream from one process step that is in fact a feed stream for a step that follows which is the case for UREX process flowsheets.

Settler. This back washes (strips) the uranium, neptunium, traces of plutonium and ruthenium into a dilute nitric acid aqueous phase that goes to the uranium purification (UP) cycle. The stripped solvent goes to a dedicated HA cycle solvent wash system and is recycled to the HA column.

c. Plutonium Purification Cycle

The aqueous feed from the 1BS pulsed column is treated with oxides of nitrogen to convert the plutonium to the extractable Pu[IV] state, leaving the other components still inextractable. This stream passes to the PP1 pulse column where a fresh stream of 30% TBP/diluent extracts the plutonium, leaving the technetium and traces of ruthenium and neptunium in the raffinate. A scrub section at the top of the PP1 column scrubs out any impurities that extracted along with the plutonium, with the scrub solution combining with the raffinate. This raffinate is salt free and can be combined with the HAAR and sent to vitrification.

The plutonium-loaded solvent goes to the PP2 pulse column where it is contacted with an aqueous solution of hydroxylamine nitrate (HAN). HAN is an effective plutonium reducing agent under the lower acid conditions in the PP cycle, and its use avoids the use of U(IV), which some other flowsheets use for plutonium reduction, and which would re-contaminate the purified plutonium with uranium. The plutonium is reduced to Pu(III), transfers to the aqueous stream and goes to plutonium dioxide production. The stripped solvent goes to a dedicated PP Cycle solvent wash system and is recycled to the PP1 column.

d. Uranium Purification Cycle

The aqueous feed from the 1C mixer settler is conditioned at a specific temperature and acidity, and for a residence time that laboratory testing showed would produce near 100% inextractable Np(V). It is then fed to the UP1 mixer settler, where the uranium is extracted into 20% TBP/diluent solvent. Neptunium stays in the UP1 aqueous raffinate. A carefully controlled HAN scrub feed is used to reduce the plutonium to Pu(III) and thus prevent its extraction, while not reducing the neptunium to the extractable Np(IV) state. The uranium-loaded solvent, with traces of plutonium and ruthenium passes to the UP2 mixer-settler where, in the absence of neptunium, higher concentrations of HAN and higher temperatures can be used to remove the plutonium and ruthenium traces from the solvent into the UP2AR. Because this also causes some stripping of uranium, fresh solvent is fed to the uranium re-extraction section of UP2 to re-extract this uranium and combine it with the solvent from UP1. The aqueous raffinates from both UP1 and UP2 are salt-free and are routed to evaporation and vitrification along with HAAR and PP1AR.

The uranium-loaded solvent passes to the UP3 backwash (strip) contactor where dilute nitric acid is used to strip the uranium from the solvent. The stripped solvent goes to a dedicated UP cycle solvent wash process and is then recycled to UP1 and UP2.

e. Separation Performance of THORP

The performance of THORP chemical separation has been reported in a series of conference

papers (see the references above). The uranium and plutonium products have readily met international standards with typical overall DFs of:

- From the HA column feed (dissolver solution) to the uranium product
  - Plutonium DF 8.6E+06 to 1.22E+10, against a flowsheet requirement of 5.0E+06
  - Neptunium DF 3.3E+04 to 2.9E+05, against a flowsheet requirement of 1.5E+04
  - Technetium DF 8.2E+03 to 2.2E+05 against a flowsheet requirement of 4.0E+03

- For the HA column feed to the plutonium product
  - Uranium DF 5.8E+06 to 5.6E+08 against a flowsheet requirement of 2.1E+05
  - Neptunium DF average of 6.6E+01 against a flowsheet requirement of 4.5E+01
  - Technetium DF average of 1.0E+02 against a flowsheet requirement of 1.0E+02

Comparisons of THORP uranium and plutonium products with international specifications for recycled nuclear fuel are shown in Tables 3 and 4, respectively.

Table 3 Quality of THORP UO_3 Product

Contaminant	Typical Measured Value	Specification
TRU alpha activity: Pu + Np, Bq/gU	4	≤25
Non-U gamma activity, Bq/gU#	35	≤35.0
Technetium, µg/gU	0.03	≤0.5

Derived from ASTM specification of < 1.1 x 10^5 MeV Bq/kgU on "worst case" basis of all activity being due to Ru-106.

Table 4 Quality of THORP PuO_2 Product

Contaminant	Typical Measures Value	U.K. Specification	ISO Specification, 1996
Uranium, µg/gPu	12	≤1000	Report
Fission products, Bq/gPu	650	≤3E+05	Report
Nonvolatile oxides, µg/gPu	170	≤5000	≤5000

f. Neptunium Chemistry in THORP

Neptunium exists in nitric acid solution in 3 valence states: extractable Np(IV) and Np(VI) and inextractable Np(V). Typical uranium-plutonium separations using strong redox reagents to produce inextractable Pu(IV) therefore tend also to produce extractable Np(IV) which thus follows the uranium stream.

During the development of the THORP UP cycle considerable research was done to understand neptunium redox behavior. It was found that a combination of careful neptunium valence control and the use of hydroxylamine nitrate reducing agent enabled neptunium Np(V) to be maintained in the presence of Pu(IV) thus giving good decontamination of both of these species from the uranium.

g. Technetium Chemistry in THORP

THORP development work using actual irradiated SNF showed that 100% of the technetium present in the feed was extracted. This was unexpected in that previous alpha-active trials showed only about 30% co-extracted with the uranium. It was found that the zirconium present in actual SNF (and not present in the alpha-active trials) complexed with the technetium to form an extractable species in the HA column, and that the zirconium was then scrubbed out in the HS column and recycled to pick up more technetium. Technetium stayed in the organic phase through complexation with the uranium.

In THORP 100% of the technetium is allowed to go forward to the 1B system where detailed flowsheet and equipment changes were made to cope with its effect on the hydrazine stabilizer and hence the U/Pu separation efficiency. In flowsheets that require separation of the technetium as a separate waste stream, the 100% extraction is useful in that it provides the opportunity to include a high acidity technetium scrub contactor immediately after the HS contactor.

h. Conclusions

THORP uses modern salt-free redox reagents together with carefully researched flowsheet chemistry to produce excellent decontamination of both uranium and plutonium in just three cycles of solvent extraction. This reduces capital and operating costs and most importantly minimizes the production of waste streams. The salt-free nature of the reagents also means that nearly all waste streams can be evaporated to small volume and vitrified.

4. La Hague Reprocessing Plant PUREX Process

The following information was extracted from a communication provided by AREVA for use in this report.

The French La Hague reprocessing plants (UP2 and UP3) and the Japanese Rokkasho reprocessing plant which is an evolutionary improvement over the UP3 plant are designed to reprocess LWR spent fuel with a design life of 50 years. Sufficient flexibility is built into the plants to accommodate spent LWR fuel with high burnups as well research reactor fuel and MOX fuel.

The La Hague reprocessing process steps are basically the same as those in all reprocessing plants. However, there are substantial process differences among the plants based on operating experience and preference. The La Hague plant UP3 process steps are discussed below:

a. Spent fuel receiving and storage

Two spent fuel unloading processes are used in the AREVA La Hague plant: under-water unloading designed for 110 casks/year and dry unloading designed tor 245 casks/year.

Dry unloading has the advantages of reducing worker radiation dose, quicker unloading, and a five-fold reduction of effluents per cask unloading

The La Hague spent fuel storage capacity is approximately 14,000 MTHM, which is about eight times the plant annual spent fuel treatment capacity.

b. Shearing and dissolution

Spent fuel assemblies are cut into segments with a shearing machine that is located above a continuous dissolver. The pieces fall into a perforated basket in the dissolver where the fuel matrix dissolves in nitric acid but the cladding does not. The dissolver design is geometrically safe to avoid inadvertent criticality. When MOX fuel is dissolved a neutron poison is added to the solution. Cladding hulls are rinsed and sent to a facility for compaction and conditioning as Intermediate Level Waste (ILW)[13]. Any residual solids remaining in the dissolver solution are removed by centrifugation.

The following improvements to the shearing and dissolution steps are being pursued:

- Techniques for managing precipitates in the dissolver and development of chemical and mechanical processes to clean the dissolving equipment,
- Better understanding of corrosion to establish a proven and significant life-time for the principal dissolving equipment,
- Adaptation of reprocessing facilities to accommodate higher burnup fuel, MOX fuel, research and test reactor fuel, and unirradiated FBR fuel.

c. U/Pu solvent extraction separation and purification

Solvent extraction with TBP in a branched dodecane diluent is used to remove uranium and plutonium from other actinides and from fission products. A nitric acid scrub is used to remove impurities carried into the TBP. Two extraction cycles in pulse columns, mixer-settlers, or centrifugal contactors are needed to meet product specifications. At the end of the extraction, scrubbing, and stripping cycles the following solutions are produced:

[13] The U.S. does not have an ILW classification. Such wastes would typically be GTCC LLW

- uranyl nitrate,
- plutonium nitrate,
- raffinates containing most non-volatile fission products and the minor actinides,
- the TBP/diluent solvent, which is regenerated by treatment to remove impurities and recycled.

Particular attention was paid to solvent cleanup. Vacuum distillation was a major innovation that insured purification of used solvent for recycle back into the process line. Pulse columns were selected for use in the most highly radioactive parts of the plant, mainly to comply with criticality safety requirements. Pulse columns for solvent extraction were superior to mixer-settlers due to the shorter residence time of radioactivity in pulse columns. This led to drastic reductions of solvent degradation and to improved management of interfacial cruds.

The UP2-800 La Hague plant[14] has 3 extraction cycles: one for co-decontamination and separation of U and Pu, and one each for further purification of U and Pu. One alkaline solvent regeneration unit is associated with the U and Pu cycles. Organic wastes are recycled after cleanup by vacuum distillation. The UP3 plant was initially commissioned with two uranium purification cycles. It subsequently became apparent that increased understanding of solvent extraction chemistry and better process control made the second uranium purification cycle uneccessary. The second cycle ceased operation in 1994. The original and present UP3 solvent extraction cycles are shown in Fig. 6.

[14]The Rokkasho reprocessing plan in Japan also has three solvent extraction cycles.

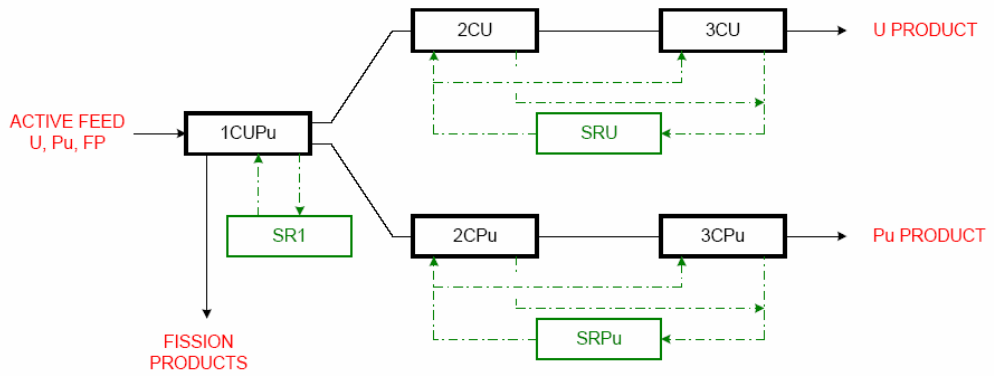

a. Original design

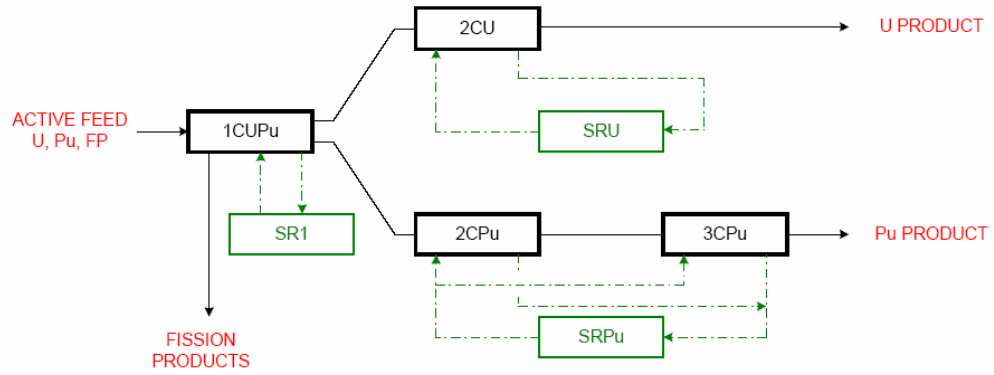

b. Present

Fig. 6 Comparison of original and current French UP3 reprocessing plant solvent extraction cycles

d. Conversion of U and Pu to products

The U solution is concentrated by evaporation, stored, and eventually converted to UF_6 for subsequent re-enrichment or to UF_6 for storage. The Pu is precipitated as the oxalate by the addition of oxalic acid. The precipitate is filtered, dried, and calcined to form PuO_2 that meets the specifications for making MOX fuel. The mother liquor containing dissolved or suspended Pu, is concentrated and recycled.

e. Management and treatment of process wastes

Process waste streams include:

- hulls and end pieces from the dissolver that are compacted for final disposal
- high-activity liquid waste streams containing:
  - suspended particles from feed clarification,
  - fission products and minor actinides,
  - concentrates generated by evaporation in the acid recovery units.

The various streams, except the suspended particles, are concentrated and stored in tanks fitted with cooling and pulse devices to keep solids suspended. The concentrates are mixed with the particles and vitrified to form a glass waste form.

f. Radioelements released

The principle radioelements released from the plant are:

- Tritium: most of the tritium is trapped in tritiated water that is released to the sea;
- About a third of the ^{14}C, which is present as CO_2, is scrubbed from the off-gas by passing it through a sodium hydroxide solution, diluted in tritiated water, and released to the sea with the remaining two-thirds being released to the atmosphere;
- Most of the iodine (^{129}I is the isotope of concern) is scrubbed by passing it through a sodium hydroxide solution which is released to the sea. Any remaining gaseous iodine is trapped in filters;
- ^{85}Kr is not removed from the off-gas stream;
- Aerosols are trapped on filters with a 99.9% efficiency. Ruthenium in vitrification off-gas aerosols is removed by injection of nitrogen oxides before being released. Aerosols released from the facility consist mainly of ruthenium and antimony.

Radionuclide releases from the La Hague plant are given in Tables 17 and 18.

5. Accidents at Spent Fuel Reprocessing Facilities

a. Sellafield Facility [Schneider, 2001]

In 1973 there was a release of radioactive material following an exothermal chemical reaction in a reprocessing tank in the Windscale plant. This accident involved a release of radioactive material into a plant operating area.

In 2005 a radioactive leak from a pipe between the dissolver and a tank in the THORP fuel reprocessing plant was detected. This resulted in an extended shutdown of the facility for repairs, government investigations, fines, and potentially legal charges against plant managers.

b. La Hague Facility [Schneider, 2001]

On October 2, 1968 ^{129}I was released through the UP2-400 stack. This accident was caused by the treatment of insufficiently cooled gas-graphite fuels.

On January 14, 1970 the temperature of the chemical dissolution reaction of graphite fuel increased sharply and an explosion due to hydrogen gas caused a release to occur. ^{129}I was also released.

On January 2, 1980 there was a leak 200m from shore through a 1-meter crack in the La Hague discharge pipe that extends kilometers out to sea.

On February 13, 1990 there was an uncontrolled release of ^{137}Cs by the ELAN II B plant chimney. A routine replacement of a chimney filters led to the release of non-filtered and contaminated air for 10 minutes.

Since 1983: Corrosion of metallic waste stored in concrete pools that leaked resulted in release of radionuclides to groundwater and near-by streams with ^{90}Sr being the most prominent.

c. Mayak [Azizova, 2005]

In 1957 one of the concrete HLW waste storage tanks' cooling systems broke down permitting the tank contents to go dry and overheat. Chemical reaction of dry nitrate and acetate salts in the waste tank containing highly active waste caused an explosion that contaminated an area later called the "Kyshtym footprint."

On April 6, 1993 a tank containing a solution of paraffin hydrocarbon and TBP used to decontaminate spent nuclear reactor fuel exploded. The resulting explosion was strong enough to knock down walls on two floors of the facility and caused a fire.

d. Tokai reprocessing plant [NNI, 1997]

In March 1997 a fire and an explosion occurred at the Tokai waste bitumenization facility. The accident contaminated 37 workers and an area of 1 km^2 around the plant was evacuated.

e. International Nuclear Event Scale and Accident Classification

Table 5 [IAEA, 2001] shows the existing International Nuclear Event Scale listed on a scale of 1 to 7 to indicate the severity of a nuclear accident or incident, along with a description of the nature of the event, which is currently used to categorize such events. It should be noted that use of this scale needs to consider the relative risk from radionuclides as compared to ^{131}I to determine the category of an event. The International Nuclear Event Scale is presently undergoing revision [IAEA, 2007b]. Table 6 [Schneider, 2001] gives specific examples of accidents that have occurred.

Table 5 The International Nuclear Event Scale

Level/ Descriptor	**Nature of Event**	**Examples**
ACCIDENTS		
7 Major Accident	External release of a large fraction of the radioactive material in a large facility, in quantities radiologically equivalent to more than tens of thousands of terabecquerels[a] of ^{131}I	Chernobyl, USSR
6 Serious Accident	External release of radioactive material in quantities radiologically equivalent to the order of thousands to tens of thousands of terabecquerals of ^{131}I, and likely to result in full implementation of countermeasures to limit serious health effects.	Kyshtym reprocessing plant, USSR
5 Accident with off-site risk	External release of radioactive material in quantities radiologically equivalent to the order of thousands to tens of thousands of terabecquerals of ^{131}I and likely to result in partial implementation of countermeasures to lessen the likelihood of health effects.	Windscale Pile, UK Three-Mile Island
4 Accident without significant off-site risk	External release of radioactivity resulting in a dose to the critical group of the order of a few millisieverts. Significant damage to the nuclear facility. Irradiation of one or more workers which result in an overexposure where a high probability of early death occurs.	1973 Windscale Reprocessing Plant, UK 1980 Saint-Laurent NPP, France
INCIDENTS		
3 Serious incident	External release of radioactivity resulting in a dose to the critical group of the order of tenths of millisieverts. On-site events resulting in doses to workers sufficient to cause acute health effects and/or an event resulting in a severe spread of contamination e.g., a few thousand terabecquerels, but releases in a secondary containment where the material can be returned to a satisfactory storage area. Incidents in which a further failure of safety systems could lead to accident conditions if certain initiators were to occur.	1989 Vandellos NPP, Spain, 1989
2 Incident	Incidents with significant failure in safety provisions but with sufficient defense in depth remaining to cope with additional failures. An event resulting in a dose to a worker exceeding a statutory annual dose limit and/or an event which leads to the presence of significant quantities of radioactivity in the installation in areas not expected by design and which require corrective action.	
1 Anomaly	Anomaly beyond the authorised operating regime but with significant defense-in-depth remaining.	

[a]One terabecquerel = 27 Ci

Table 6 Types, Occurrences of Accidents at Reprocessing Plants and Sites

Type of Accident	Liquid releases	Gaseous releases	Occurrence
Criticality in dissolver tank	X	X	Windscale, 1973 Tokai, 1999*
Fire		X	LaHague, 1981 Karlsruhe, 1985 Tokai, 1997
Explosion		X	Savannah River, 1953 Kyshtym, 1957 Oak Ridge, 1959 LaHague, 1970 Savannah River, 1975 UTP Ontario, 1980 Tomsk-7, 1993 Tokai, 1997 Hanford, 1997
Filtration default of liquid releases; breach in releases structures	X		LaHague, 1979-80 Sellafield, 1983
Loss of coolant		X	Savannah River, 1965 LaHague, 1980

*The September 1999 accident at Tokai-Mura did not involve a reprocessing plant but is a generic type of accident which could occur in a reprocessing plant.

6. Consolidated Fuel Reprocessing Program

One of the earliest integrated attempts by the U.S. government to develop and deploy fuel recycle technology was the Consolidated Fuel Reprocessing Program (CFRP). CFRP was initiated in 1974 at Oak Ridge National Laboratory primarily to advance the technology of fast reactor fuel reprocessing, although many aspects of the technology were applicable to all conventional fuel reprocessing. The program emphasis was primarily on process automation technology, robotics, process computerization, and head end process steps to improve gaseous effluent control.

Automation technology has been widely adopted in the manufacturing industry and in the chemical processing industries, but until recently only to a limited extent in nuclear fuel reprocessing. It does, however, find wide use in the manufacture of commercial light water reactor fuel fabrication. This is especially true in the chemical conversion process for uranium. The effective use of automation in reprocessing had been limited by the lack of diverse and reliable process instrumentation and the general unavailability of sophisticated computer software designed specifically for reprocessing plant process control.

A new facility, the Integrated Equipment Test (IET) facility, was developed by the CFRP in part to demonstrate new concepts for control of advanced nuclear fuel reprocessing plants using advanced instrumentation and a modern, microprocessor-based control system. The IET consisted of the Integrated Process Demonstration (IPD) and the Remote Operations and Maintenance Demonstration (ROMD). The IPD focused on demonstration of state-of-the-art equipment and processes, improved safeguards and accountability, low-flow cell ventilation, advances in criticality safety and operability, and new concepts for control of advanced nuclear fuel reprocessing plants using advanced instrumentation and a modern, microprocessor-based control system. The ROMD served as a test bed for fully remote operations and maintenance concepts and improved facility layout and equipment rack designs. This facility provided for testing of all chemical process features of a prototypical fuel reprocessing plant that can be demonstrated with unirradiated uranium-bearing feed materials. The goal was demonstration of the plant automation concept and development of techniques for similar applications in a full-scale plant. It was hoped that the automation work in the IET facility would be useful to others in reprocessing by helping to avoid costly mistakes caused by the under-utilization or misapplication of process automation.

During the 1970s and 1980s CFRP was a leader in advancing technology used in fuel reprocessing. Numerous interactions were established with foreign governments such as United Kingdom, France, Germany, Japan, Russia and Korea to share information and establish policy.

Eventually the CFRP became reliant on the infusion of money from the Japanese nuclear enterprise and on-site Japanese technical personnel for survival. Because of the moratorium imposed by the Carter administration on U.S. reprocessing, much of the U.S.-supported CFRP technology that was developed has to date found more application in Japan than it has found in the U.S.

7. International Nuclear Fuel Cycle Evaluation (INFCE)

President Carter's April 1977 statement on nuclear policy that made a commitment to defer indefinitely the commercial reprocessing and recycling of plutonium – coupled with low prices for fossil fuels and uranium – effectively ended consideration of non-defence reprocessing and recycle activities in the U.S. for decades. However, the immediate result of the deferral was the initiation of a series of studies to evaluate the need for reprocessing and plutonium recycle. The largest of these was the International Nuclear Fuel Cycle Evaluation (INFCE).

INFCE addressed essentially all the important technical issues related to fuel recycle. In October

1977 the International Nuclear Fuel Cycle Evaluation Committee was initiated, mainly at the urging of the U.S., to investigate opportunities to safely internationalize the nuclear fuel cycle. INFCE participants met between 1977 and 1980 to address ways to use the nuclear fuel cycle to produce nuclear energy with a reduced risk of nuclear proliferation by modifying the fuel cycle technological base. INFCE highlighted a number of measures to counter the dangers of nuclear proliferation, including institutional and technical measures, as well as improvement and further development of International Atomic Energy Agency (IAEA) safeguards. Subsequent to INFCE, reprocessing of spent nuclear fuel and recycle of the resulting nuclear materials was virtually ignored in the U.S. until the turn of the century.

a. Content of the INFCE Study

INFCE focused on: 1) an overall assessment of the nuclear fuel cycle, 2) measures to improve assurances of availability of plutonium supply for reactor fuels to developing states, 3) spent nuclear fuel storage, 4) improvements to nuclear safeguards, and 5) alternatives to an international nuclear economy based on plutonium and highly-enriched uranium fuels. Concern about introduction of an international plutonium economy led the IAEA in 1978 to establish a Committee on International Plutonium Storage (IPS). Establishment of the IPS was the principle recommendation of INFCE.

b. Principle Conclusions

The report of INFCE Working Group 4 [INFCE, 1980], one of eight INFCE Working Groups, discussed reprocessing, plutonium handling, and recycle of plutonium to thermal reactors. Fast reactor recycle was left to Working Group 5, and other fuel recycle concepts, e.g., thorium-based and research reactor fuels, were left to Working Group 8. The basic recommendation of INFCE was to deposit plutonium surplus to national needs with the IAEA. In this strategy for controlling plutonium it was envisioned that excess plutonium would be placed under international inspection and control until needed for use in civil nuclear power applications.

B. Fuel Fabrication and Refabrication

Fabrication of fresh and refabrication of fuel from reprocessed spent nuclear fuel is a international industry. A recent IAEA publication [IAEA, 2007a] gives information on both the characteristics (e.g., the ^{99}Tc concentration) and the specifications of reprocessed UO_3.

1. Fuel Refabrication Technology

LWR reactor fuels are of two types: 1) low-enriched uranium oxide and 2) mixed uranium-plutonium oxides (MOX). The uranium oxide fuels are much more common, but as more plutonium becomes available MOX fuels, in combination with uranium oxide fuel, are becoming more common. Both fuel types are made from what is essentially the dioxides of the two fissile metallic components.

For UO_2 pellet material fabrication uranyl nitrate solution is denitrated in a fluidized bed or rotary kiln to form UO_2. Plutonium nitrate solutions are treated in a manner similar to uranyl nitrate solutions if PuO_2 is sought. For MOX fuel material preparation uranium and plutonium oxide powders are blended or uranium and plutonium solutions are mixed, concentrated, and simultaneously denitrated (by microwave heating) to produce a mixed U/PU oxide (MOX). UO_{2+x}, PuO_{2+x} and MOX are then treated by the following steps.

a. They are calcined in air at 800 º C.

b. The calcined product is heated in a reduction furnace in H_2/N_2 at 800 º C. to produce UO_2, PuO_2 or MOX fuel material suitable for pellet fabrication. (This two-step reduction saves hydrogen.)

c. The powders are blended when appropriate and mixed with volatile binders.

d. After pressing and sintering to form pellets the pellets are ground to meet specifications.

e. The LWR fuel pellets are inserted into Zircaloy cladding tubes which are grouped into a square array with grid spacers and held together with two stainless steel end pieces connected by empty tie rods. Zircaloy, an alloy of zirconium, is used for neutron economy. It has a low cross section for capture of neutrons in the thermal neutron energy spectrum found in LWR cores.

f. Fast reactor fuel is fabricated using stainless steel cladding and hardware. Stainless steel is suitable for use with liquid metal coolants and where the temperature is high. (Neutron economy is not as important in fast reactors where the neutron energy is higher than in LWRs resulting in smaller neutron absorption cross sections.)

The steps in a conventional MOX fuel refabrication are shown diagrammatically in Figure 7. Other refabrication processes have been developed and deployed. These processes typically differ in the details of how the uranium and plutonium oxide powders are blended and are summarized in [IAEA, 2003a].

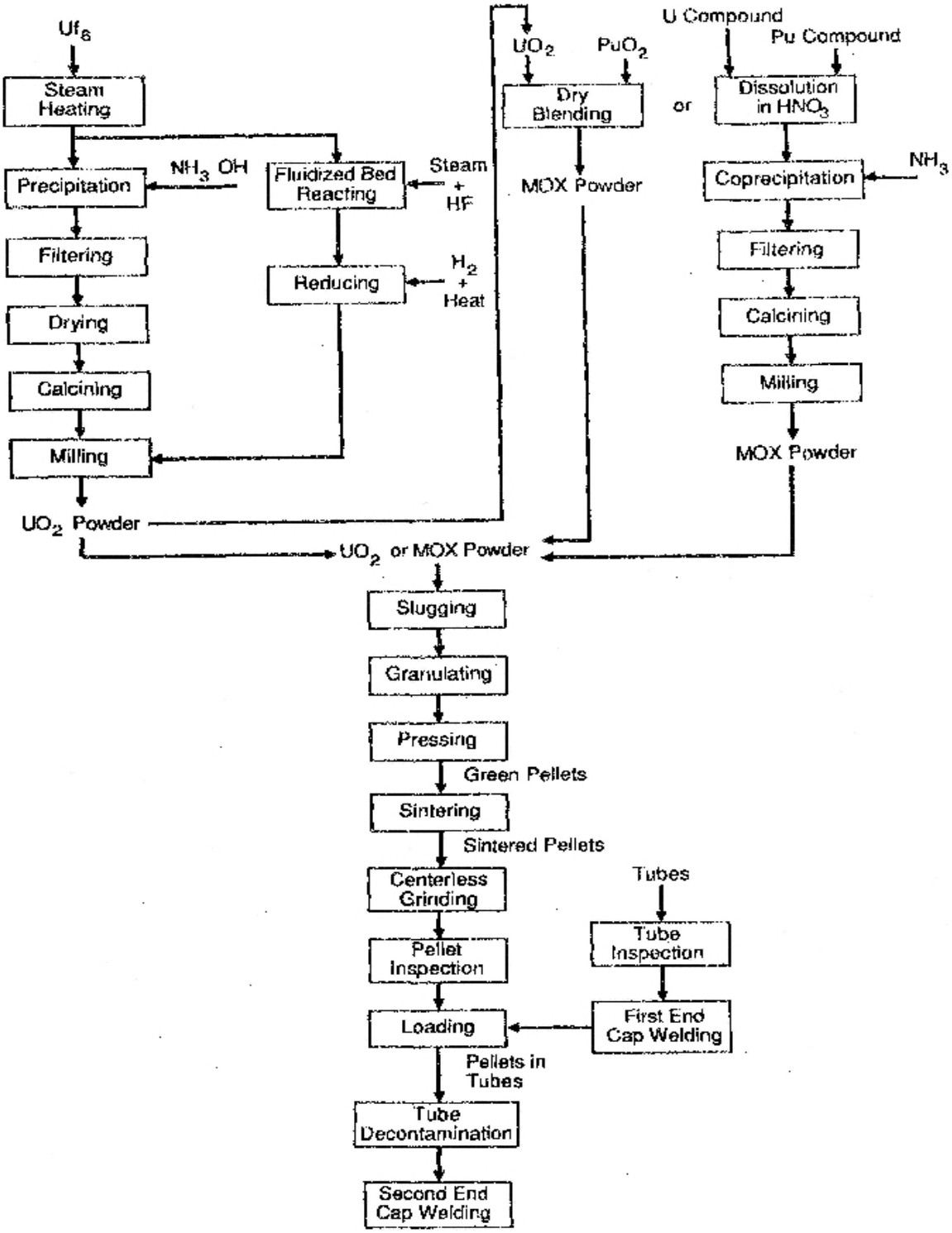

Fig. 7 Diagram of MOX fuel fabrication process

2. MOX Fuel Fabrication Facilities

Some of the plutonium recovered by reprocessing is being fabricated into mixed oxide (MOX) fuel. Table 7 [ISIS, 2007] lists the capacity and status of MOX fuel fabrication plants worldwide.

In addition to the MOX fabrication plants listed in Table 7, the U.S. DOE has a MOX plant under construction at the Savannah River site in South Carolina. The current plan is for the facility to be built as part of the national strategy to dispose of excess weapons-grade plutonium by using it for commercial power production. According to the plan the facility would be used only for the purpose of disposition of surplus plutonium and is subject to Nuclear Regulatory Commission (NRC) licensing. The current plan is for the facility to be shut down when the weapons plutonium disposition is completed.

A recent IAEA document provides details of MOX fuel fabrication world-wide [IAEA, 2003a].

3. HTGR Fuel Fabrication

HTGR fuel is very different from other types of solid reactor fuels, and fabricating HTGR fuel is entirely different from fabricating LWR or fast reactor fuels. Both Germany and the U.S. have developed HTGR fuel fabrication processes for HTGR TRISO fuel particle (see Sect. II.B.1) preparation that consist of a number of similar steps. In both countries kernels containing the fissile material are made via a sol-gel process[15], followed by washing, drying and calcining to produce spherical UO_2 kernels (in Germany) and UCO kernels (in the US). The major difference in tne processes consists of a sintering step using CO in the U.S. process to ensure the requisite C/O stoichiometry in the kernel. The coating processes for the inner porous "buffer" layer are similar, based on chemical vapor deposition from a mixture of Ar and acetylene in a fluidized coater operating between 1250 and 1300 °C. A 5-micron seal coat is added in the U.S. process to seal the porous buffer coating. This step does not occur in the German process. Table 8 gives typical properties of coated fuel particles and pebbles. Figure 8 is a schematic diagram and photograph of TRISO fuel particles.

[15] In sol-gel processes a colloidal suspension (sol) is "gelled" to form a solid by extraction of water and addition of a mild chemical base. When carried out using droplets of sol, spherical gelled particles are formed.

Table 7 Capacity and status of operating MOX fuel fabrication plants

Country	**Plant**	**Scale**	**Design Capacity, te HM/yr**	**Product Material**
France	Melox	Commercial	195	MOX for LWRs
India	Advanced Fuel Fabrication Facility (AFFF)	Commercial	100 (nominal)	MOX for BWR, PFBR
India	Kalpakkam MOX Breeder Fuel Fabrication (under construction)	Commercial	?	MOX for PFBR
Japan	JNC Tokai (PFDF-MOX)	Laboratory	0.03	MOX fuel element
Japan	JNC Tokai (PFFF-ATR)	Pilot Plant	10	MOX fuel assembly
Japan	JNC Tokai (PFPF-FBR)	Pilot Plant	5	MOX fuel assembly
Japan	Rokkasho MOX Plant (planned)	Commercial	120	MOX for LWRs
Russia	Mayak- Paket	Pilot Plant	0.5	FB, RR MOX fuel
Russia	Research Institute of Atomic Reactors	Pilot Plant	1	FBR (Vibropack)
U.K.	Sellafield MOX Plant	Pilot Plant (MDF)	Likely 40	MOX for LWRs
U.K.	Sellafield MOX Plant	Commercial (SMP)	120 design 40 feasible	MOX for LWRs

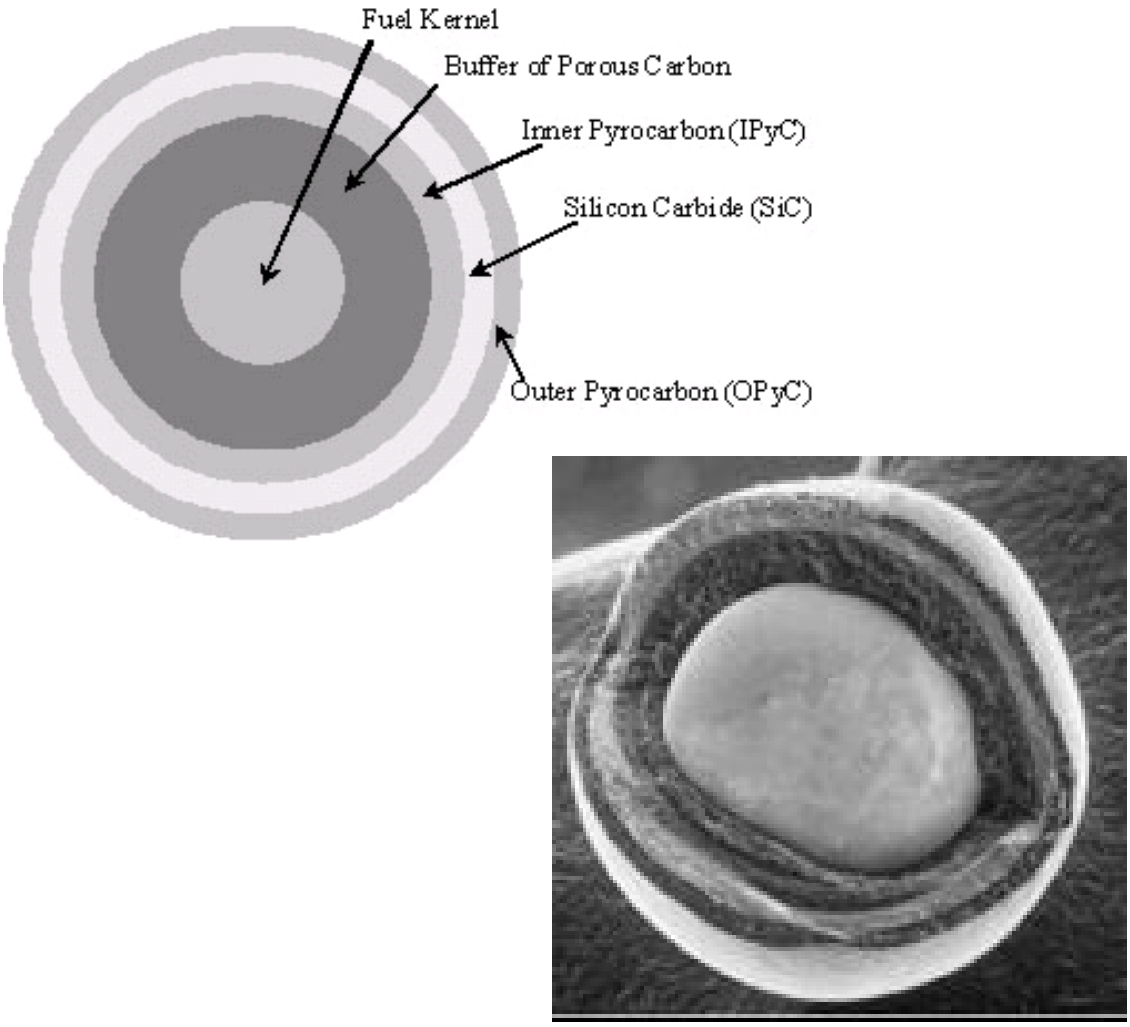

Fig. 8 Schematic and photograph of TRISO particle

Table 8 Typical Coated Particle Composition and Dimensions for Pebble Bed Fuel

Microspheres

Kernel composition: UO_2

Kernel diameter: 501 μm

Enrichment (U-235 wt.%): 93

Thickness of coatings (μm)

Buffer	92
Inner PyC	38
SiC	33
Outer PyC	41

Particle diameter: 909 μm

Pebbles

Heavy metal loading (g/pebble): 6.0

U-235 content (g/pebble) 1.00 ± 1%

Number of coated particles per pebble: 9560

Volume packing fraction (%): 6.2

Defective SiC layers (U/Utot): 7.8E-06

A photograph of a "pebble" of the type used in the pebble bed reactor is shown in Figure 9.

Fig. 9 Photograph of German HTGR pebble fuel element

A prismatic fuel assembly of the type developed by General Atomics and used in the commercial Fort St. Vrain Power Reactor is shown in Figure 10. These fuel assemblies are 14 inches from one flat vertical face to the opposing face and about a meter high. Fuel "sticks" of pyrolyzed carbon containing TRISO fuel particles are inserted into holes in the fuel block. There are also channels that go completely through the prismatic block for coolant gas flow. Larger channels provide openings into which boron carbide control rods may be inserted.

A major difference in the production of the TRISO coating is that all three layers are coated in a continuous manner in the German process, whereas in the U.S. process the fuel particles are unloaded from the coater after each coating layer to perform quality control (QC) measurements. The inner pyrocarbon layer in both cases is deposited from a mixture of acetylene, propylene, and argon. The temperature in the U.S. process is somewhat lower than in the German process and the coating gas concentration is different, producing a different microstructure and density for the inner pyrocarbon (IPyC) layer. The SiC layer is deposited from a mixture of hydrogen and methyltrichlorosilane at similar coating rates, although the temperature for U.S. coating is about 150 °C higher than that used in the German process. The outer pyrocarbon layer (OPyC) layer is coated in a manner similar to the IPyC layer. In the U.S. a seal coat and protective pyrocarbon layer (PPyC) are added. These layers are not counted in determining that the particle is a "TRISO" particle.

The fuel pebble in Germany uses graphite powder and organic binders to produce a powder matrix that is used to contain the particles and to create the spherical fuel pebble. In the US, a thick liquid matrix composed of petroleum pitch, graphite flour and graphite shim mixed with organic binders is used to make the fuel compact. Both fuel forms are pressed and carbonized at high temperature (800-900 °C).

Ultra high purity systems and feedstock are used in the manufacture of pebbles in Germany to ensure adequate control of impurities. Both fuel forms undergo a final heat treatment, with the U.S. compact heated at 1650 °C and the German pebble at 1800 to 1950 °C in vacuum.

Fig. 10 Prismatic HTGR fuel element

IV. RECYCLE FACILITY SITING AND DESIGN

The primary purpose of a reprocessing plant is to chemically separate the fissile content of irradiated nuclear material from fission products and other actinide elements to recover fissile (^{235}U, $^{239,240}Pu$, ^{233}U) and fertile (^{238}U, ^{232}Th) radionuclides. There are five major steps involved in building and operating a reprocessing plant: (1) site selection, (2) plant design, (3) plant construction, (4) plant operation, and (5) waste management .

A. Site selection

Siting a reprocessing plant is determined by a large number of considerations. These include proximity to reactors providing the spent fuel, geology, hydrology, seismology, climatology, flooding potential, topography, demographics, and uses to which the surrounding land is put, e.g., agriculture, industry, and transportation. These considerations are discussed in more detail below.

Proximity to reactors producing the spent fuel is important from the point of view of reducing radiation exposure during transportation and increasing the security of shipments but under some circumstances may not be of paramount importance. This would be true for example if the spent fuel were of foreign origin. In any case, shipment of the spent fuel to the reprocessing plant may be cause for concern by the public.

Geology of the site is important if radioactive liquid effluents are released because the rate of transport of radionuclides through the environment is strongly influenced by the nature and conformation of the soil. For example, clay has an affinity for important radioisotopes such as ^{137}Cs and rare earths and is likely to be self-healing if fractured, whereas granite has little such affinity, and there is no tendency for cracks to heal. Additionally, it is desirable to build a reprocessing plant where background radiation is low and not highly variable because it is difficult to establish an environmental monitoring radioactivity baseline where radiation levels are high or fluctuate widely. This problem can occur where uranium or thorium levels in the soil are high, leading to high radon levels that may produce large radiation background variations during climatic inversions.

Hydrology is very important if radioactive liquid effluents are released because the predominant mechanism for transport of radionuclides is carrying by groundwater. (In the case of an accident transport by air can become of great importance, as for example the Chernobyl accident.) This aqueous transport pathway may be by the mechanism of carrying dissolved ions of radionuclides or by carrying colloids or pseudocolloids, e.g., colloids of plutonium or pseudocolloids of iron or clay to which radionuclides are sorbed. The aqueous pathway is the most likely source of non-natural radiation dose to the public through direct ingestion of radionuclides or through contamination of agricultural products by irrigation using contaminated groundwater obtained from wells or streams. Hydrology may also be an important consideration in supplying water for use in the facility if there are no nearby sources of plentiful surface water.

Seismology has a major impact on licensing plant sites and on plant construction. The plant must be sited where it is practical, both economically and physically, to ensure and demonstrate that its integrity can be retained during a projected earthquake of reasonable probability. Those parts of the reprocessing plant that contain heavy shielding and contain the highest levels of radioactivity must be capable of withstanding earthquakes with no loss of containment integrity.

Climatology plays a role in plant siting because some areas are prone to seasonal weather extremes, such as hurricanes, tornadoes, snow and ice storms, and fires in dry weather.

Flooding potential is an important consideration if the site is located in a flood plane, near rivers or streams, or is in the path of seasonal snow-melt runoff or dam failure.

Topography plays a role because the cost of plant construction may be high if grades are too steep, too much soil removal is required, or water drainage is inadequate and poses construction and subsequent operational problems.

Demographics play a major role in gaining public acceptance of a site. Whenever practicable it is desirable to site a reprocessing plant distant from large population centers. This consideration may be at odds with locating the reprocessing plant near reactors where transportation problems are minimized and is an example of often conflicting siting considerations.

Agriculture and Industry in the neighborhood of a potential plant site can be of considerable importance. The presence of a facility that handles large amounts of radioactivity can be claimed to diminish the value of the crops, the land, or the products produced. Additionally, release of radioactivity and concomitant contamination of expensive crops or industrial buildings and machinery can lead to very large financial obligations.

Transportation activities, such as commercial air, rail, or truck traffic need to be considered. This applies both to the transport of radioactive materials and to ordinary commercial traffic. Heavily traveled highways such as interstates in the immediate vicinity of the plant may cause concern to the public or the Departments of Transportation, both federal and local. Intermodal spent fuel transport, including use of navigable waterways, may cause concern with sportsmen as well as health departments if the waterways are the source of drinking water. These transportation issues are especially nettlesome because of the need to balance negative public perception with the desirability for the plant to be reasonably close to the source of the spent fuel.

B. Design and Construction

A typical spent fuel reprocessing facility is designed and constructed to minimize the release of radioactive materials within and outside the facility both during routine operation and under unusual or accident conditions. Specifically, the current 10 CFR Part 20 Subpart E §1406 "Minimization of contamination" states the following: "Applicants for licenses, other than renewals, after August 20, 1997, shall describe in the application how facility design and procedures for operation will minimize, to the extent practicable, contamination of the facility

and the environment, facilitate eventual decommissioning, and minimize, to the extent practicable, the generation of radioactive waste." At least two physical barriers (frequently more than two) contain the radioactive materials within the facility during operation. These barriers are typically the process equipment (vessels, pipes, etc.) and the building around the processing equipment. In most cases, the building itself provides two barriers – the hot cell or room where the process equipment is located and the outer building shell.

The discussion that follows is based for the most part on the BNFP. Significant advances have been made in the design and operation of reprocessing plants as a result of international experience.

1. Design

Historically, recycle plants have consisted of four major processing facilities plus a fuel receiving and storage area:

(1) *The Separations Facility*, in which the spent fuel assemblies are processed to recover uranium and plutonium as nitrate solutions and where the bulk of radioactive by-product wastes are separated as a concentrated nitrate solution of HLW.

(2) *Uranium Hexaflouride Facility* in which the recovered purified uranyl nitrate solution is converted to UF_6 suitable as a feed material for isotopic re-enrichment if desired.

(3) *Plutonium Product Facility* in which the recovered plutonium nitrate solution is converted to PuO_2, suitable for use in the production of mixed oxide fuel (MOX).

(4) *Waste Management Facilities* for the handling, stabilization, packaging, assaying, inspection, and interim storage of waste prior to shipment to a disposal facility appropriate for each type of waste. It should be noted that the current 10 CFR Part 20.1406 "Minimization of contamination" states the following: "Applicants for licenses after August 20, 1997, shall describe in the application how the facility design and procedures for operations will minimize, to the extent practicable, contamination of the facility and the environment, facilitate eventual decommissioning, and minimize, to the extent practicable, the generation of waste."

NRC's Office of Nuclear Regulatory Research (RES) is developing a regulatory guide to implement 10 CFR Part 20.1406 to facilitate decommissioning of nuclear facilities licensed after August 20, 2007. The goal of this guide is to ensure throughout the life of he facility that design and operating procedures minimize the amount of residual radioactivity that will require remediation at the time of decommissioning. Reprocessing plants will be included under this guidance.

The actual design of these major facilities will be directly related to the regulations effective at the time of licensing and the desired/required form of both the fissile as well as the waste material discharged. Proliferation and safeguards are of national and international concern when

considering the construction of a recycling plant, as are attacks by terrorists. Beyond these overriding considerations there are very important practical matters that must be taken into account in the design, construction and operation of a plant.

It is necessary to optimize the plant configuration for reprocessing to minimize the overall facility capital and operating costs. This is done by considering the interplay of a large number of factors. Initially, it must be decided if the plant is to be designed with a single, multiple step, process line or whether it will have parallel process lines. If the plant is to process a variety of fuel types or a very large throughput is required then parallel lines will facilitate processing dissimilar fuel types, allow maintenance of one line when the other line is in operation, or allow practical equipment sizes while achieving high throughput.

Another aspect of plant optimization concerns approaches for waste treatment (e.g., concentration of liquid wastes by evaporation and compaction or melting of spent fuel cladding hulls and other hardware), and its storage and disposal. Design optimization also addresses radiation protection of workers through use of the minimum shielding thickness consistent with meeting ALARA and radiation dose and radioactivity confinement requirements; appropriate selection of the processes carried out in the plant; and careful choice of the equipment used to carry out those processes. Simple, reliable equipment, continuous operation where possible, and ease of remote removal and replacement of equipment all contribute to minimizing capital and operating costs. In addition to being able to achieve the desired throughput, each equipment piece in the high radiation areas of the plant must be capable of being replaced remotely or have a very low probability of failure (e.g., no moving parts, exceedingly corrosion resistant, be critically safe, be matched to the characteristics of the fuel assemblies to be reprocessed, and chosen insofar as possible to be of standard sizes. Inoperability of a reprocessing plant is likely to result from structural failure of equipment or piping in an inaccessible area as a result of corrosion or mechanical failure, or failure of some part of the separations process.

There is an optimum point in design of criticality features. For example, there is a tradeoff between having many small, critically safe process lines that offer protection for dissolver feed through geometry and having fewer, larger lines that achieve criticality safety through other means such as neutron poisons. The choice is made largely on the basis of cost, with the large number of smaller lines being more costly.

Some general guidelines are useful to keep in mind in plant design: It is desirable for radiation protection and ease of operation to put equipment for receiving the spent fuel, spent fuel pool and HLW storage, the fuel segment storage, and the reprocessing product storage in separate cells interconnected through transfer channels to the processing area. Ventilation and waste treatment capabilities may be provided separately for each segment. However, some facilities such as those used in maintenance may be shared. Avoiding inaccessible equipment or piping is also very important.

One additional area that has proved troublesome is managing the complexity and cost associated with different fuel types and sizes. Variable fuel design require different handling equipment for casks and fuel assemblies, and interim storage racks or casks

.

2. Construction

Process equipment is to be fabricated from materials that are resistant to corrosive failure and which operate very reliably. Process equipment designed to prevent major releases of radionuclides under conditions assumed to be credible was designated as being of "Q" design[16]. These "Q" systems must provide confinement integrity for design basis accidents and naturally occurring events such as earthquakes and tornadoes. In other less critical areas, the design membrane stress of the equipment had been established at 80% to 90% of the yield stress during a design basis earthquake. Structural barriers are designed to contain process materials if primary equipment barriers are breached. The principal structural barriers are constructed of heavily reinforced concrete.

The structural barriers for process equipment are generally termed "radioactive process cells" and are usually surrounded by maintenance or operating areas. The process cells where the spent fuel is chopped and dissolved and where high level liquid wastes are concentrated are very high radiation levels cells. At BNFP these cells were designed for remote maintenance (i.e., maintenance from outside the cell by the use of in-cell cranes, shielding windows and manipulators). Similarly, a cell for remote packaging of radioactive wastes and for performing remote decontamination and maintenance of equipment removed from other process cells was also provided. The rest of the process cells are designed to permit direct personnel entry and contact maintenance, but only after appropriate remote decontamination has been completed to allow safe entry. These cells were designed to minimize maintenance requirements.

The process and support equipment used in handling radioactive materials is contained in cells or glove boxes. Spent fuel assemblies are stored and transported under water in pools. The cells, glove boxes, and pools provide a barrier between the highly contaminated or radioactive environment within and the habitable environment. Cells with thick concrete shielding walls or pools with deep water cover are provided where protection is required against penetrating (gamma) radiation. Glove boxes are used to isolate radioactive material when radiation levels are low and contact operations are permitted. In the BNFP the portions of the building allowing personnel access were divided into the radiation zones shown in Table 9. It should be noted that Table 9 contains historical limits which are much higher than what is actually being experienced in modern reprocessing facilities.

Table 9 Radiation Zones and Permissible Radiation Fields at BNFP

Zone	Radiation Field (maximum)
Normal access, non-radiation zone (area)	0.1 mR/hr
Normal access, work zone (station)	1.0 mR/hr
Normal access, above work zone (station)	1.0 mR/hr (at 1 foot from shield)
Limited access, work zone (gallery)	10 mR/hr

[16] The current designation for this type of equipment is "Items Relied on for Safety (IROFS)" as defined in 10 CFR 70.4.

Limited access, above work zone (gallery)	100 mR/hr (at 1 foot from shield)

The shielding design and designation of each room within the separations facility building are based on the functions to be carried on in the room, the expected occupancy and the anticipated exposure rate. Personnel access to cells is possible but is allowed only when absolutely necessary and only then with adequate protection and health physics coverage. Cell entry is possible only through heavily shielded doors or hatches, which are normally sealed.

The process equipment, piping, building and structures, casks, storage tanks, and fuel element cladding (prior to shearing) provide barriers for the confinement of radioactive materials. Essential confinement systems are designed to maintain their function under normal operating conditions, abnormal operations, upper limit accident conditions, and adverse environmental conditions throughout the life of the facility. Hatches and penetrations, which are an integral part of the structure, are designed so as not to compromise the confinement and shielding functions.

The floors of all cells in the facility are to be covered with continuous (welded) stainless steel liners. These liners serve to contain all liquids within the cells in the event of a primary vessel leak. The walls of the cells are covered with either stainless steel or a radiation-resistant paint. The choice of cell wall covering depends on the nature of the material to be processed within the particular cell and the need for decontamination. The wall covering serves to seal the concrete structural material from the corrosive atmosphere and radionuclides and, hence, facilitate decontamination. Figure 11 is a picture of the BNFP hot cell operating area.

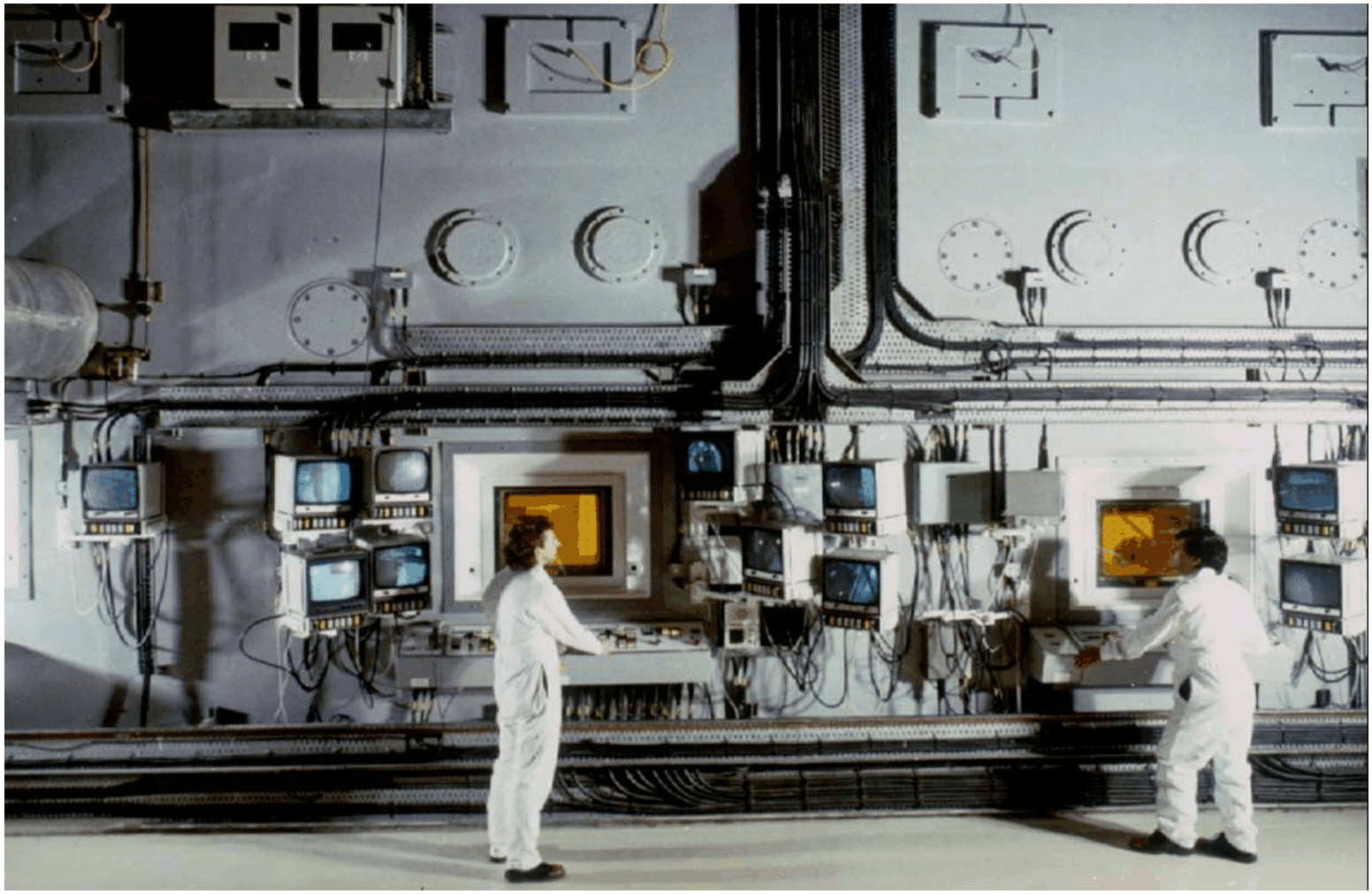

Fig. 11 BNFP fuel reprocessing plant operating area in front of hot cells

Glove boxes are used to provide confinement when operational requirements and radiation levels permit manual operation. The penetrating radiation produced by the radionuclides within the glove box is to be sufficiently low such that personnel may operate and maintain the equipment without receiving exposure above approved standards. Therefore, the type of operation performed within glove boxes typically involves only small quantities of radionuclides with penetrating radiation. Generally, glove boxes are used for laboratory, sampling, inspections, or clean plutonium operations. Figure 12 shows a typical glove box setup for handling radioactive material having low levels of penetrating radiation.

Fig. 12 Glove boxes used for handling nuclear materials having low levels of penetrating radiation

3. Equipment Modules

The following major equipment modules are required: (a) spent fuel receiving and storage, (b) main process cells, (c) HLW solidification plant; (d) uranium hexafluoride conversion plant; (e) plutonium product facility; (f) auxiliary process systems and service areas. These modules are discussed below.

a. Spent Fuel Receiving And Storage

In the BNFP the Fuel Receiving and Storage Station (FRSS) was designed to receive and store wet SNF from LWRs. The spent fuel assemblies are received in shielding casks transported by either truck or rail, and unloaded under water. The fuel assemblies are stored under water to provide cooling and shielding. Facilities for decontaminating the shipping casks before they leave the plant, and equipment to circulate, filter, deionize, and cool the spent fuel storage pool water are provided. The major areas of the FRSS and their primary functions are summarized in Table 10. Modern reprocessing plants typically have facilities for unloading dry SNF in air which avoids the need for a water pool and distribution of trace radioactive materials which requires water cleanup and generates more waste.

Table 10 Primary Functions of Areas in the BNFP Spent Fuel Receiving and Storage Station

Area	Primary Process Functions	Remarks
Two vehicle loading bays	Receive rail and truck casks; unload casks from transport vehicle; load empty casks onto transport vehicles	
Test and decontamination pit	Prepare casks for unloading in cask unloading pool	Stainless steel floor pan
Cask unloading pools	Remove fuel from casks; place solidified waste canisters in cask	Stainless steel liner
Decontamination pit	Decontaminate casks after removal from cask unloading pool	Stainless steel floor
Fuel storage pool; waste canister racks	Store fuel assemblies and solidified waste	Stainless steel liner
Fuel transfer pool	Transfer fuel assemblies to main process building	Stainless steel liner

Deionization area	Circulate, filter, de-ionize and cool pool water

The FRSS is connected to the main process building by the fuel transfer conveyor tunnel and is connected to the waste solidification plant by an underwater transfer aisle. The pool walls and liners are designed to maintain their containment integrity during a design-basis earthquake or tornado. Building walls above the pools are non-Q structures.

b. Main Process Cells

The main process cells are the functional center of the reprocessing/recycling plant. The uranium and plutonium are chemically separated from the other actinides and fission products in these cells. This processing is carried out in a series of cells that occupy a major portion of the building. The main process building also contains a wide variety of facilities and equipment that are used to monitor and control the process, maintain the equipment, carry out auxiliary operations, and treat gaseous effluents from the processes carried out in the building.

The primary functions of the main process cells are listed in Table 11. Most of the building is constructed of reinforced concrete designed to remain intact during a design-basis earthquake or tornado. Process cell walls are rebar-reinforced and up to two meters thick to provide personnel shielding from radioactivity.

The areas outside the main process cells are generally divided into regions called ‘galleries’, ‘areas’, or ‘stations’. These regions enclose and protect service piping, process support equipment, instrumentation components, and some operating areas. Radioactivity levels range from essentially background to fairly modest levels.

Table 11 Primary Functions of Main Process Cells

Cell	Primary Process Function	Remarks
Remote process cell (RPC)	Shear and dissolve fuel; concentrate high-level liquid waste	Stainless steel floor pan; remote maintenance
Remote maintenance and scrap cell (RMSC)	Package leached hulls and other solid waste; remotely maintain contaminated equipment	Stainless steel walls and floor
High-level cell (HLC)	Accountability for dissolver solution; chemically adjust dissolver solution; centrifuge dissolver solution	Stainless steel floor pan
High-intermediate level cell (HILC)	Separate uranium and plutonium from high-level waste; separate uranium from plutonium; treat dissolver off-gas; solvent cleanup; concentrate intermediate-level waste	Stainless steel floor pan; contact maintenance
Intermediate level cell (ILC)	Treat vessel off-gas; recover nitric acid; concentrate low-level waste; burn used solvent	Stainless steel floor pan; contact maintenance
Uranium product cell (UPC)	Purify uranium stream; clean up solvent	Stainless steel pan; contact maintenance
Plutonium product cell (PPC)	Purify plutonium stream	Stainless steel pan; contact maintenance
Plutonium nitrate storage and load-out (PNSL)	Store plutonium nitrate solutions; transfer plutonium nitrate to Plutonium Oxide Conversion Facility	Stainless steel pan; contact maintenance

c. Waste Solidification Plant

The Waste Solidification Plant (WSP) is located adjacent to the main process building. It receives high- and intermediate-level liquid waste solutions from the waste tank farm complex, converts the liquids to a vitrified solid, and facilitates the transfer of solidified high-level wastes to the FRSS for storage and eventual shipment offsite.

The WSP contains the waste vitrification and canister sealing equipment, inspection and decontamination equipment, off-gas treatment equipment, and remote maintenance facilities in four process cells. The primary process functions performed in each of the cells are presented in Table 12. All process cells in the WSP are completely lined with stainless steel. The cells were to be surrounded by limited access areas for operating and controlling the processes in the cells. All operational and maintenance facilities in the process cells would be performed remotely using viewing windows, manipulators and cranes.

Table 12 Primary Functions of Major Process Cells in the Waste Solidification Plant

Area	Function
Waste vitrification cell	Calcine liquid waste; vitrify calcined waste
Canister decontamination cell	Decontaminate outer surfaces of canisters; transfer filled canisters to FRSS
Off-gas treatment cell	Treat off-gas from WSP process vessels
Hot maintenance cell	Perform remote maintenance on contaminated equipment

d. Uranium Hexafluoride Conversion Plant

In the BNFP the conversion facility to produce UF_6 consisted of two buildings, both of standard chemical plant construction. The main building was a multi-story structure containing the principal process areas. A second building located near the main process area was used for fluorine generation. The UF_6 facility was located near the main process building to eliminate the need for shipping uranyl nitrate to a distant conversion plant. Elimination of the uranyl nitrate shipping requirement saved time, reduced the costs to the nuclear power industry, and lessened the chances of a radiological hazard to the public. Typical UF_6 plants are designed such that there is sufficient surge capacity between process stages to continue operation of adjacent stages when one section is down.

e. Plutonium Product Facility

A Plutonium Product Facility (PPF) was contemplated in the BNFP. Its purpose was to: (1)

convert aqueous plutonium nitrate solutions to plutonium oxide, and (2) provide storage for plutonium oxide. The PPF process facilities were to be located in a separate building immediately adjacent to the Main Process Building.

The Plutonium Product Facility was to have a nominal design capacity of 100 kg of plutonium product (as plutonium dioxide) per day with an on-stream time of 250 days per year to give an annual conversion capacity of 25,000 kg of plutonium (1134 g of PuO_2 contains 1,000g of plutonium). This capacity would be divided between two identical production lines, each with a capacity of 50 kg per day. This design basis was selected to allow a 1,500 MTU/year reprocessing/recycling facility to process mixed-oxide feed material for fuels having plutonium contents higher than LWR recycled fuels. Although the design capacity was 25,000 kg of plutonium per year, it could be operated at a lower capacity.

Most of the operations and maintenance in the facility were to be carried out in glove boxes. Leaded gloves were planned to be used to protect against low-level gamma radiation, and relatively thin concrete and other hydrogenous shields would be used to protect against the neutron radiation from the ^{238}Pu [from (α, n) radiation produced when high-energy alpha particles strike low-atomic number elements].

f. Auxiliary Process Systems and Service Areas

The Auxiliary Process Systems and Service Areas provide necessary services to the main process functions of the Main Process Building. The major areas are described below.

i. Ventilation System

The ventilation system consists primarily of supply and exhaust subsystems. The ventilation system was designed to provide once-through airflow by pressure controls from non-contaminated areas through potentially contaminated or low-contaminated areas to highly contaminated areas (i.e., process cells), then to treatment systems before being pumped by blowers out the stack. Three blowers were to provide exhaust for the main ventilation system. Each blower was to be capable of supplying fifty (50%) percent of the required capacity and was to be connected to emergency power sources.

Exhaust gases from the radioactive processing cells were to pass through at least two stages of high-efficiency particulate air (HEPA) filters. Off-gases from areas with high plutonium concentrations were to pass through three stages of HEPA filters. These extra stages of filtration were designed to provide for a minimum of one stage of filtration in the event of failure of the upstream filters by mechanisms such as fire. Exhaust gases from the main process and building ventilation systems exited through the main stack (100 meters high). Non-condensed gases from the concentrator vented through the service concentrator stack (30.5 meters high). The chemical makeup and addition tank vented through the chemical off-gas stack (29 meters high).

A major feature of the ventilation system was the ventilation filter station. This housed the

primary supply and exhaust blowers and the final stage of HEPA filters through which the exhaust air passed before exhausting through the 100 meter stack[17]. In this late twentieth century design, a cryogenic krypton capture and recovery system was planned to be incorporated, but neither a krypton recovery system nor a system for capture of tritium and ^{14}C was being built when construction ceased.

ii. Electrical Power

Normal electrical power was provided to the facility from a commercial substation by two transformers, each feeding a 2,000 amp main breaker. The main breakers distributed power through twelve 120 amp feeder breakers.

The emergency electric power system was designed to handle essential electrical loads in emergency situations. Emergency power was supplied by two independent diesel engine-driven generators. Each generator had a 2,200 kw continuous rating. An emergency battery supply was provided for instrumentation in the main control and the waste tank equipment gallery area.

iii. Fire Protection System

Fire detection and protection systems at the facility were designed to provide early warning and rapid control of fire. Automatic fire detection devices and audible alarms were installed in all areas of the facility. The process cells had dual detection systems. The remotely maintained process cells used manually operated non-combustible purges and water spray mist systems. The contact-maintained cells were served by automatically operated Halon[18] systems. The filter stations were designed with automatic mist suppression systems, and the FRSS had manually operated fire hoses. Most other areas used a manually operated water sprinkler system.

iv. Hot and Cold Laboratory Area

The laboratories provided analytical services for all non-radioactive and most radioactive process samples. At the BNFP, the laboratory building was a two-story complex adjacent to the main process building. It was composed of thirteen individual laboratories equipped to provide specific types of analysis or services. Radioactive materials in these laboratories were handled in glove boxes. The sample and analytical cells are in a shielded facility designed to facilitate radiochemical analyses of samples from the more highly radioactive portions of the process. The cells provide a shielded area for remote sampling and analysis of these materials, and for preparation of samples to be analyzed in the plant analytical laboratories. Operation is through the use of either shielded cells with viewing windows and manipulators or glove boxes.

---

[17] In contrast to the ventilation system planned for BNFP, experience in existing large commercial reprocessing facilities has shown the need for wet scrubbers, condensers, mist eliminators, HEPA filters, etc. to meet effluent discharge limits.

[18] Halon is a liquefied, compressed halogenated hydrocarbon gas that stops the spread of fire by physically preventing (suffocating) combustion. Although the production of Halon in the U.S. ceased on January 1, 1994 under the Clean Air Act, it is still legal to purchase and use recycled Halon and Halon fire extinguishers.

g. Control Room Area

The control room area houses the process-control and safety-related instrumentation for the plant. It serves as the communications center from which operators can be directed to perform manual functions. The control room area is not expected to be contaminated under normal operating conditions, since the only process connections to other facility areas are electrical.

h. Liquid Waste Storage Areas

High- and intermediate-level liquid waste from the reprocessing operation would be concentrated and stored in large underground tanks until the wastes could be solidified and shipped off-site for disposal. The BNFP had a Liquid Waste Storage complex composed of two high-level liquid waste (HLLW) tanks, one intermediate-level liquid waste (ILLW) tank, and a waste tank equipment gallery (WTEG) to provide services for the tanks. One equivalent HLLW tank volume was to remain available at all times for use as a spare if difficulties should arise with any tank of HLLW or ILLW. Additional HLLW tanks were to be added to handle the continued generation of wastes. The WTEG is a concrete building located near the main process building housing the control room, heat exchangers, coolant circulating pumps, off-gas treatment equipment, and ventilation filters for the waste storage tanks. These tanks were connected through a small diverter cell beneath the WTEG and through underground pipe vaults to the main process building and the waste solidification plant. Figure 13 is a picture of the BNFP plant HLW storage tanks under construction showing the extensive internal cooling piping required to remove radioactive decay heat. This large amount of coolant piping in storage tanks at plants undergoing decommissioning poses significant problems when solid salts and sludges must be removed, as is the case at some DOE sites. However, at BNFP all of the tanks were made of stainless steel which allowed storage of acidic wastes and essentially eliminated the presence of solids. Storing wastes as acidic solutions avoided the formation of sludges (primarily hydroxides and hydrous oxides of metallic ions such as lanthanides, other fission products, and iron) such as were formed in the waste storage tanks at the Hanford and Savannah River sites. These sludges have posed substantial challenges to remediation of large underground tanks at these two sites.

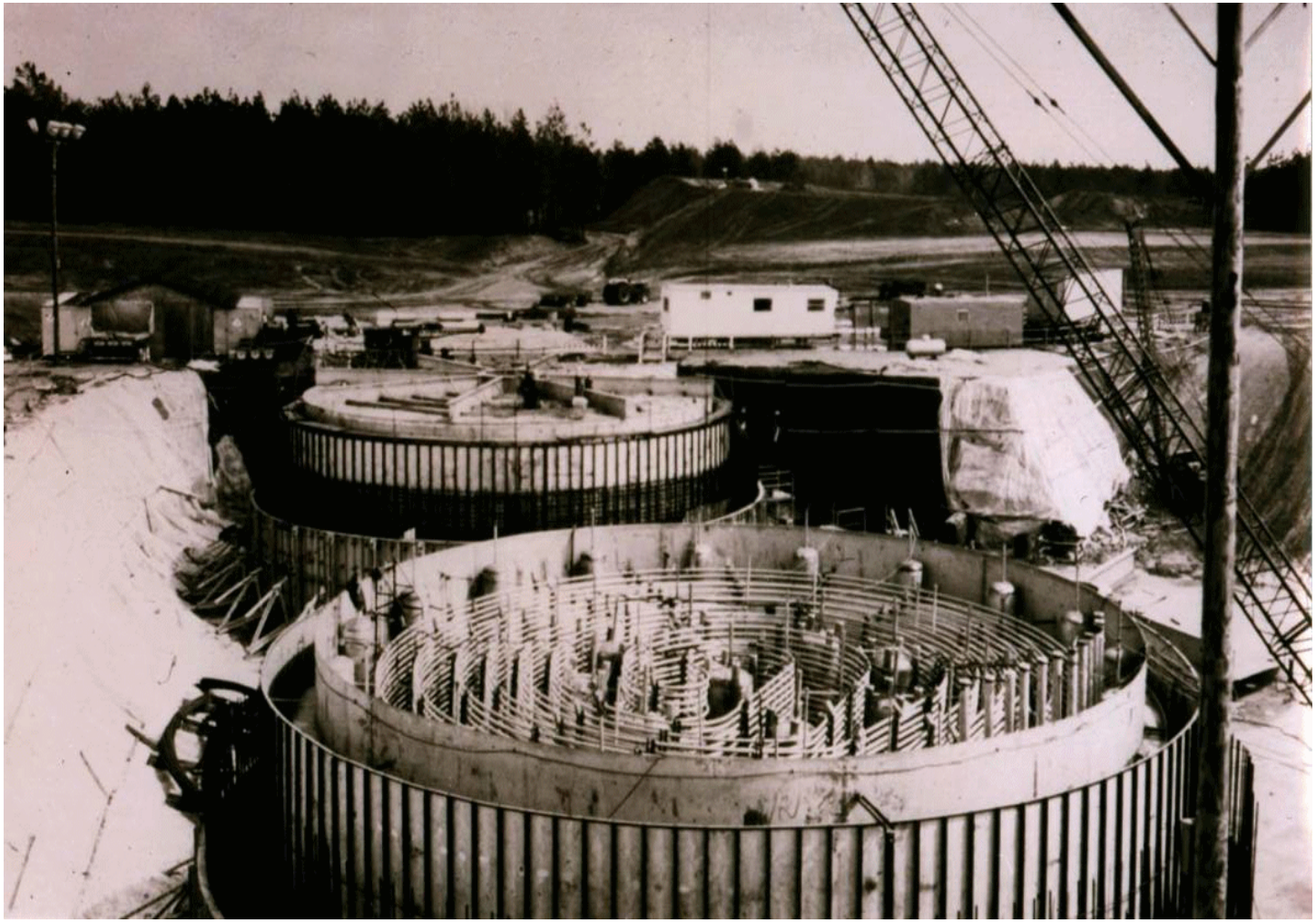

Fig. 13 Tanks for liquid HLW storage under construction at the BNFP facility

i. Solid Waste Storage

The BNFP design included a solid waste storage area of approximately twenty (20) acres -- an area deemed sufficient to store the solid waste generated during the first three years of operation. The solid wastes to be stored in this area were divided into three major categories: (1) spent fuel cladding hulls and hardware; (2) high-level general process trash (HLGPT); and (3) low-level general process trash (LLGPT)[19]. Hulls and HLGPT were to be stored in caissons mounted in an engineered berm or in concrete vaults. The LLGPT would be stored in earth-covered cargo containers. In modern reprocessing plants the required waste storage volume per unit of SNF processes is likely to be less because of improved operational practices.

4. Criticality Control Methods

Whenever enriched uranium or plutonium are present criticality control becomes an important consideration. The method used to control criticality depends on the physical and chemical nature of the fissile material, its mass and purity, and its geometry. Several control methods have been employed whose use depends on the above factors.

a. Physical form control

It is important to know if the physical form is such that fissile material can be compacted to increase its density. It is also very important to know what the chemical composition is. If it is chemically combined with elements that absorb neutrons it is less likely to present a criticality risk.

b. Mass control

For criticality to occur it is essential that the amount of fissile material equal or exceed the minimum critical mass. A common approach to preventing criticality is limiting the allowable amount of fissile material in any one location to less than a critical mass.

c. Composition control

Certain chemicals mixed with the fissile material can prevent criticality by absorbing neutrons. Elements with isotopes having large neutron absorption cross sections such as boron, cadmium, or gadolinium, are commonly added to fissile materials. Usually these elements are in a form permitting their easy removal when desired.

d. Geometry control

[19] NRC does not have a category of waste called "low-level general process trash. The term was used by BNFP as a descriptive identifier of a type of radioactive waste rather than as formal waste classification.

Vessels having geometries that allow for loss of neutrons through their surfaces in amounts such that a chain reaction cannot be sustained in the vessels are universally used. The vessels may be of many differing configurations, but cylindrical or flat "slab" configurations are common. Typically one dimension such as diameter in the case of cylinders or thickness in the case of slabs is limited to the order of 13 cm. Another geometry that has been used is annular tanks, with neutron poisons in the annulus.

C. Du Pont Reprocessing Studies

After many years of operating the DOE Savannah River Site reprocessing plant the du Pont Company carried out and supported research and development by others of a conceptual design for what would be an NRC licensed fuel recycle complex based on du Pont's reprocessing experience and lessons learned from that experience and the experience of others. The design studies were completed and reports issued in November 1978 [Behran, 2000]. This facility design was not considered in White House reviews of reprocessing during the Ford, Carter, or Reagan administrations. Many, but not all, of the special features listed below are incorporated in reprocessing plants overseas.

Special features of the du Pont facility design included:

- Canyon structures for containing process equipment that could be installed, maintained and replaced remotely using overhead cranes,
- Use of the best technology available, including centrifugal contactors for the first cycle of solvent extraction, and storage of solutions between process steps,
- Product recoveries greater than 99.8 %,
- Reprocessing one-year cooled spent fuel,
- Personnel access to operating areas, with close control of entry and exit,
- Vitrification of high-level wastes for ultimate storage,
- Flexibility to allow changes, additions, or upgrades of equipment, flowsheets, instruments, etc.,
- No accumulation of separated plutonium except in secure surge storage between reprocessing and fuel fabrication
- Tritium and krypton capture in addition to iodine,
- Sand filters,
- Opportunities for lowering cost through research and development as a result of longer cooling time before reprocessing.

D. Operator Licensing and Training

The operation of a reprocessing/recycling facility entails all of the operational skills and safety requirements associated with a reasonably complex chemical processing plant overlain with the

radiation safety, security and safeguards requirements of a significant radioactive nuclear facility. However, other than as noted in the preceding sections of this report, there is little current commercial experience remaining in the NRC regulated world and that which does exist resides mostly in people who have retired. Therefore, the training and qualification of the operating staff takes on major significance in the absence of the ability to rely on a pool of fully trained, experienced, and licensed personnel.

In the past, the general criteria was for operators, technicians and supervisors to have received at least a two year certificate from an established technical school. Applicants with this background normally have sufficient understanding of the physical, chemical, and engineering technologies to adequately undertake the necessary specific plant training.

The importance of qualified operators to the safety of a reprocessing plant can hardly be over emphasized. The contents of an application for licensing individuals who manipulate the controls of a properly licensed facility (at the time of BNFP) are set forth in 10 CFR Part 55, Subpart D, §55.31.

1. Experience at NFS

Experience gained from the past licensing of reprocessing plant operators at other commercial reprocessing plants may be of some benefit to this study. This historical experience may be used as an indicator of the validity of the requirement for training and the evolution of training programs over the years, as well as the possible direction of future training efforts.

During the planning stages of NFS, their management and the regulatory staff of the U.S. Atomic Energy Commission established four major operator categories:

(1) manipulator operators,

(2) chemical operators,

(3) control room operators, and

(4) senior operators.

These categories were similar, in most respects, to those presented in the USAEC Licensing Guide, which was used at that time for nuclear reactor operators.

The results of the original examining program in 1966 were disappointing. Of the total number of senior operator applicants taking the examination, seventy-eight (78%) percent were successful in obtaining licenses; however, only fifty-nine (59%) percent of the chemical operations personnel applying for licenses were successful. Only nine (9%) percent were initially awarded licenses. Some of the reasons for the excessive failure rate were as follows:

- At the time of testing, the head-end system had not been completed, and very little practical operating experience could be included in the training program.
- Most of the applicants were young, and, therefore, had little or no industrial experience.
- As is usually the case in a new plant, the inadequacies of the first training program were not apparent until the program had been completed.
- The first set of tests was, to some extent, experimental.

The disappointing results, and the underlying reasons, were similar to those experienced in the early phases of the program for examining power reactor operators.

Later, a pre-testing program was conducted at ORNL to establish the validity of future examination procedures. In this program, the same tests were administered to process foremen, chemical operators, and technicians who had considerable experience in the reprocessing field and to new employees with little or no experience. The questions posed were basically those to be used for examining NFS operators. The results obtained in this program verified that the questions proposed for the NFS tests were reasonable and confirmed that adequate training was a prerequisite for passing the licensing examination.

As the training methods improved at the NFS and new testing methods were developed, the number of successful applicants at the facility increased. A summary of the NFS licensing experience during the period 1966 - 1970 is presented in Table 13.

Table 13 Experience in Applications Made By, and Licenses Awarded to, NFS Plant Personnel

Year	**Initial Examination**			**First Re-Examination**	
	Number of Applicants	**Licenses Awarded**	**% of Successful Applicants**	**Number of Applicants**	**Licenses Awarded**
1966	98	43	44	51	34
1967	30	23	77	2	2
1968	18	16	89	0	0
1969	49	32	65	6	4
1970	23	15	65	6	4
Total or Average	218	129	59	65	44

2. Experience at the MFRP

During 1971 - 1972, the operators of the General Electric Company's fuel reprocessing plant at Morris, Illinois, underwent formal training to prepare them for licensing. Of the 65 persons included in the program, only two failed to qualify for licensing. Many of the candidates for training in the MFRP plant had been licensed previously in the NFS plant and had obtained employment with General Electric when the NFS facility at West Valley, New York ceased operation. Operators in two general categories were trained for operation in the plant (mechanical processes and remote process equipment). In addition, several senior operators were trained for supervisory roles. It was estimated that more than 220 man-days of effort were expended for each candidate in the training program. The estimated cost for this undertaking, including salary, overhead, and training, was established at $25,000 per individual. This cost would be much higher today, of course, because of inflation.

3. Experience at BNFP

BNFP was very nearly completed when the U.S. national policy stopping commercial fuel reprocessing was instituted. The pre-startup staff of the BNFP included a cadre of operators who had been involved in training and retraining over the previous one-to-four year period. In addition to the operator training program, programs for others such as analytical laboratory technicians and security patrol officers were also conducted. These programs were necessary to ensure that all operations would be carried out correctly, not only for safety related reasons, but also for safeguards- related and physical security-related reasons.

The operations personnel and analytical technicians at the BNFP were cross-trained. Security officers were also cross-trained in various areas of physical security. As a result, the personnel were considered to be highly trained and knowledgeable in BNFP operations but would have required retraining at that time consistent with any systems modifications required to generate a more proliferation resistant fuel cycle operation.

Operators, technicians, and patrol officers in the various categories were not given the necessary licensing examination to permit operation because BNFP licensing was terminated before completion. However, because of the extensive training and retraining taking place during checkout and "cold"-run operation, it was expected that the failure rate during the licensing examination would be low. The presence of more experienced personnel in any type of operating facility helps reduce the mistakes made by those who, although well trained, remain inexperienced.

4. Training for operation of the Rokkasho-Mura reprocessing plant

About 100 people were trained to operate the Japanese Rokkasho-Mura reprocessing plant through four years of hands-on operating experience at the La Hague reprocessing plants.

5. Typical Reprocessing Plant Operator Training Program

The programs necessary to train reprocessing plant operators are far more rigorous than those

employed in conventional industrial chemical facilities. Further, the process of choosing candidates with the necessary educational, psychological, and medical requirements to receive this training is a prime concern. The selection of candidates who cannot pass the required certification of licensing examinations results in a financial burden to the enterprise. In addition, unsatisfactorily trained individuals tend to jeopardize safety and hamper efficient operation of the plant under normal as well as abnormal conditions.

Current NRC requirements for training and certification of operators working in the nuclear power industry and in nuclear power plants are found in 10 CFR Part 26 and 10 CFR Part 54. In addition NRC form 398, "Personal Qualification Statement – Licensee," gives requirements for manipulating controls of a licensed facility. Appendix D presents additional details on operator licensing.

The qualifications of applicants for operator licenses are determined through two methods of testing: (1) written examinations covering categories such as physics, chemistry, mechanical processing systems, chemical processing systems, equipment and instrumentation, power and auxiliary systems, administrative and procedural rules, and radiological safety; and (2) an oral examination.

The time required to adequately train an operator was found to be approximately 1 to 1.5 years.

The qualifications of the initial operators for future reprocessing/recycling plants is yet to be established, as the role of the DOE and the level of its interaction with the NRC and potential commercial owner/operators has yet to be established.

E. Needed Improvements

The proposed GNEP and closely related AFCI has as one of its cornerstones the development and reduction to practice of spent nuclear fuel separations processes that leave Pu primarily with actinides other than uranium. This necessitates equipment and methods for tracking, assay and accountability of the fissile material content of separations process streams that have not been faced heretofore in this country. The processes proposed above will require equipment, processes and detectors for real-time tracking and monitoring and fissile content assay of materials used in fabrication of fuels from fissile material from the separations processes.

1. Improved Processes

Precise and accurate tracking, detecting, monitoring and assaying the Pu/LEU content of product and waste streams from separations and fabrication processes will be required for any nuclear fuel recycle plants with improved proliferation resistance.

Computer programs to record, evaluate, interpret and provide real-time output from process equipment and fissile material monitors to local and central monitoring stations are requirements

for the integrated, large-scale data handling programs for management of data from all parts of the fuel cycle plant (process control, process monitoring, material transfer, material inventory, portal monitoring) to improve plant proliferation resistance by interrelating and cross checking disparate sources of information, as well as to improve plant efficiency. Plant operating parameters should be compared on a continuous basis with computer simulated normal plant operating parameters to detect, evaluate and report off-normal operation both locally and remotely as a check on possible illicit operations and improper plant operation. These factors are enlarged upon below.

2. Improved Equipment

Process equipment are required for real-time monitoring and assay of fissile materials present in reprocessing and fabrication plants for fuels from separations processes containing a mixture of actinides that are to be fabricated without further purification for use in reactors. Equipment for real-time monitoring of spent fuel separations processes based on recent advances in instrumentation and controls and adaptations of equipment and computerized analysis of data already in use can make possible improved tracking of fissile material through the processing steps. Flow rates through pipes and process equipment, e.g., centrifugal contactors, pumps, pulse columns, mixer-settlers, and centrifuges, can be better measured and controlled than in the past. Volume and concentration measurements can be made with greater precision and accuracy in feed and product tanks, thus improving material accountability. Fissile material concentrations and amounts can be measured through the use of better sampling and analysis techniques and subsequent computerized analysis of the data. For example, more and better energy spectra measurements and spectrum resolution can be obtained using technology and tools already available. Flow rates of UF_6 can now be measured accurately. These types of improved measurements make possible location, identification and quantification of chemical and isotopic species of interest.

3. Security and Safeguards

In addition to the normal industrial fences and barriers, nuclear facilities have additional requirements for both physical security and nuclear material safeguarding. These two requirements often, but not always, overlap. In light of potential terrorist threats, security and safeguards activities are being stressed, and additional measures are being put into place.

Physical, psychological and mental requirements of the guard and security forces are specified. These are under continuous review as threat levels are reassessed. Entry portals, coded badges, and other measures are used to control and monitor both personnel and equipment egress and ingress. Internal and external portal monitors are required. Periodic physical inventories of objects containing fissile material are to be performed.

4. Detectors

The proposed separations processes will require equipment, processes and detectors for real-time tracking and monitoring and fissile content assay of materials used in fabrication of fuels and fissile material from the low-decontamination separations processes.

Improvements in the proliferation resistance of nuclear fuel reprocessing plants through use of improved detectors are possible in a variety of areas. Personnel monitoring and record keeping of movements and activities of personnel is easily achieved through a variety of methods to ensure there are no illicit activities. Speciation technology (e.g., radiochemical methods for trace concentrations; laser spectroscopy; X-ray absorption fine structure spectroscopy; magnetic resonance techniques, redox speciation; ion-selective electrodes) for materials of interest has improved greatly in recent years. Computerized recording and analysis of data from the sensing and measuring equipment, conducted both locally and at remote locations, permits detection of off-normal operating conditions. This capability is useful both for monitoring plant operations and for maintaining accountability of fissile material. Potential areas of application of some of these new and novel technologies are discussed below.

5. Material Accountability

As already noted, all nuclear material separations and fuel fabrication processes produce products and wastes that contain fissile material. The amount of fissile material going to waste can be significant for high-throughput processes that operate over relatively long periods of time. If it were to be recovered it could potentially exceed a critical mass although the fissile material is typically very dilute and a major effort would be required to recover what was previously deemed to be irrecoverable. Highly sensitive detection and measurement equipment is now available to monitor and assay the plutonium and enriched uranium content of waste streams from separations plants and from both enriched uranium and MOX fuel fabrication processes.

A special accountability problem arises when the minor actinides (Np, Am, Cm) are not in secular equilibrium because their concentrations are currently often inferred from calculations based on assumed equilibrium when the concentrations are not readily measured. When decay chains are broken, accountability can become much more difficult. It is important to keep this in mind, especially when both Pu and U are present.

Computerized, integrated, large-scale data handling programs for management of data from all parts of the fuel cycle plant (process control, process monitoring, material transfer, material inventory, portal monitoring) will be a necessary adjunct to any modern reprocessing or fuel fabrication plant. These programs can greatly improve plant proliferation resistance by interrelating and cross checking disparate sources of information.

Considerable effort, both nationally and internationally, is required between the groups responsible for establishing the permissible significant (SIGMA) Pu inventory differences (ID).

As shown in the Table 14 [Pasamehmetoglu, 2006], there is a large difference between the IAEA, the NRC and the DOE with regard to the Sigma ID requirements, and the frequency of both long-term shutdown inventory and interim frequency requirements.

Table 14 Sigma ID Requirements Based on the Current Most Stringent, Category 1 Requirements for NRC and DOE

Agency	Goal/Requirement Terms	Sigma ID	Frequency of long-term inventory (shutdown required)	Frequency of interim inventory (shutdown not required)
IAEA	Material Unaccounted for (MUF): - 8 kg Pu abruptly in one month - 8 kg Pu protracted in one year	Sigma ID ≤ 2.42 kg Pu	Annual	Monthly
NRC	Standard Error of Inventory Difference (SEID)	Sigma ID ≤0.1% of active inventory	Semi-annual	Monthly
DOE	Limit of Error (LOE)	Sigma ID ≤1% of active inventory of nuclear material	At least annually	Bi-monthly

For a plant that processed 1 MTIHM/year, assuming 30% Pu content, the NRC Sigma ID would be 25 g, compared to the IAEA's 2.42 kg. For recycle facilities with the expected throughput to be commercially viable, attaining the NRC Sigma ID is a political, diplomatic and technological challenge.

In 1978, an NRC draft report discussed a then-reference safeguards system intended to meet seven design objectives for sites and three for transport.

For sites the objectives were:

(1) "Ensure that only authorized personnel and materials are admitted into material access areas (MAA's) and vital areas (VA's).

(2) Ensure that only authorized activities and conditions occur within protected areas, MAA's and VA's.

(3) Ensure that only authorized movement and placement of SSNM occur within MAA's.

(4) Ensure that only authorized and confirmed forms and amounts of SSNM are removed from MAA's.

(5) Ensure timely detection of unauthorized entry into protected areas.

(6) Ensure that the response to any unauthorized activity is timely, effective, and appropriate to the particular contingency.

(7) Ensure the presence of all SSNM in the plant by location and quantity."

For transport the three design objectives were:

(1) "Restrict access to and personnel activity in the vicinity of transports.

(2) Prevent unauthorized entry into transports or unauthorized removal of SSNM from transports.

(3) Ensure that the response to any unauthorized attempt to enter vehicles and remove materials is timely, effective, and appropriate for the particular contingency."

It was the belief at the time that the referenced system, based upon supporting studies and analyses, "was consistent with the safeguards requirements imposed by 10 CFR Parts 70 and 73." A generally conservative approach was adopted to further increase confidence in that finding.

Five alternative safeguards options were also examined, and, in general, these measures afforded the potential for improving overall safeguards performance or reducing the overall societal impacts attributable to safeguards. None significantly outweighed any other in general efficacy.

It should be noted that the NRC's safeguards program for commercial licensees is part of a national safeguards structure introduced initially to protect defense-related SSNM. That structure included three primary components: 1) intelligence gathering, 2) site and transportation security, and 3) recovery of lost material. Only the second component, site and transportation security, which involves physical security and material control, would fall primarily within NRC's field of responsibility. The other two, intelligence and recovery operations, would remain the responsibility of other agencies such as the FBI, the National Security Council, DOE, and State and local law enforcement agencies. NRC collaborates with these other agencies in developing contingency plans for reacting to and dealing with theft or diversion, but does not participate in intelligence operations or physically take part in recovery operations.

V. OVERVIEW OF ADVANCED SPENT NUCLEAR FUEL RECYCLE INITIATIVES

The National Energy Policy (NEP) [NEP, 2001] issued by the President Bush in May, 2001 recommended expanded use of nuclear energy in the U.S., including development of advanced nuclear fuel cycles, reprocessing and fuel treatment technologies. Consistent with the President's policy, DOE adopted an "integrated strategy" with four initiatives: Nuclear Power 2010 program; the Advanced Fuel Cycle Initiative (AFCI); the Generation IV Nuclear Energy Systems initiative; and the Nuclear Hydrogen initiative. Additionally, on February 6, 2006, the Secretary of Energy launched GNEP, a comprehensive international strategy to expand the safe use of nuclear power around the world.

A. Advanced Fuel Cycle Initiative

The purpose of the DOE AFCI program is to develop fuel systems and enabling fuel cycle technologies for GEN IV reactors and future reactors in support of GNEP. DOE anticipates that AFCI will provide options for the management of spent nuclear fuel through treatment and transmutation of radionuclides that will reduce the cost, hazards and volume of HLW disposal in repositories, reduce the amount of plutonium accumulating in the nuclear fuel cycle, and recover for beneficial use the energy potential remaining in spent fuel. DOE plans call for systems analysis to be an important part of the ongoing AFCI program and have an increased role during the next few years. The planned systems analysis will investigate key issues such as the required rate of introduction of advanced burner reactors (ABRs) and actinide separations facilities to avoid the need for a second HLW repository early in this century, and a detailed study of the technical requirements for the facilities and how the facilities might support the top level goals of the program. DOE plans to use the results of these analyses to establish the basis for each key decision in the AFCI program and for GNEP program planning.

AFCI is organized into the following program elements:

- Separations
- Fuels
- Transmutation
- University Programs

The purpose of each element is summarized below.

1. Separations

Separation processes will be devised to recover plutonium in a way such that it is never separated from at least some transuranic actinides and possibly some fission products. Essentially all of the transuranic elements in addition to the ^{137}Cs and ^{90}Sr will also be removed from the waste going to the geologic repository. Such removal would reduce the heat load in the repository, greatly increasing the number of fuel assemblies whose wastes go to the repository, and consequently obviating the need for additional repository space for many decades. These separation technologies are not alternatives to a geologic repository but could help reduce the

cost and extend the life of a geologic repository.

2. Fuels

Fuel forms for advanced fast-spectrum transmutation reactors that are planned for transmuting transuranic actinides (i.e., Np, Pu, Am, and Cm) to fission products are being developed. Oxide, nitride, carbide, and metallic fuels are being considered. The AFCI is also developing fuels for GEN-IV power reactors.

3. Transmutation

Transmutation is a process by which long-lived radioactive isotopes, especially actinides such as plutonium and neptunium, but also selected fission products such as ^{99}Tc and ^{129}I, are converted to shorter-lived fission products or stable isotopes by fission and/or neutron capture from neutrons generated in a reactor or by the interaction of high-energy ions from a particle accelerator with a metal target such as mercury, tungsten, or bismuth. Theoretically, the preferred neutron source to fission actinides is one of high average neutron energy (yielding a high neutron fission-to-capture ratio), high flux (to which the transmutation rate is proportional), and large core volume (to accommodate more actinides). This has lead to a preference for fast reactors as the neutron source. Transmutation of fission products is usually more efficient in the low-energy neutron spectrum typical of thermal reactors such as LWRs, but DOE is currently focusing on actinide transmutation and, thus, on development of fast reactors with the lead candidate being a sodium-cooled reactor with stainless-steel-clad fuel.

4. University Programs

The goal of the AFCI University Programs element is to foster education of the next generation of scientists and engineers who will support the growth of nuclear power. This goal is to be achieved primarily by funding infrastructure upgrades at universities and by education and research.

a. University Nuclear Infrastructure (UNI)

This program brings together several program elements supporting the increasingly vital university nuclear engineering infrastructure. Program elements include:

<u>Innovations in Nuclear Infrastructure and Education (INIE)</u>

This program strengthens the Nation's university nuclear engineering education programs through innovative use of the university research and training reactors and encouraging strategic partnerships among the universities, the DOE national laboratories, and U.S. industry. Currently there are 6 university consortia providing support for 38 universities in 26 states under the INIE program.

Reactor Fuel Assistance

The DOE provides fresh fuel to, and takes back spent fuel from, university research reactors. There are currently 27 operating university research reactors at 26 institutions in the United States.

Reactor Upgrades

The DOE provides assistance to universities to improve the operational and experimental capabilities of their research reactors. Grants are provided to the universities to purchase equipment and services necessary to upgrade the reactor facilities, such as reactor instrumentation and control equipment, data recording devices, radiation, security, and air monitoring equipment, and gamma spectroscopy hardware and software.

Reactor Sharing

Through this assistance effort, DOE enables universities with reactors to "share" access to their facilities with students and faculty at other institutions who lack such a facility. The reactors are made available for use in research, experiments, material irradiations, neutron activation analysis and training, and for facility tours and other educational activities.

b. Nuclear Engineering Education Research (NEER) Grants

This highly competitive peer-reviewed program provides grants to nuclear engineering faculty and students for innovative research in nuclear engineering and related areas. The awards run from one to three years and are granted in nine separate technical areas related to nuclear engineering: reactor physics, reactor engineering, reactor materials research, radiological engineering, radioactive waste management, applied radiation science, nuclear safety and risk analysis, innovative technologies, and health physics.

c. Other University Support Activities

DOE/Industry Matching Grants

The Department of Energy and participating companies provide matching funds of up to $60,000 each to universities for use in funding scholarships, improving nuclear engineering and science curricula and modernizing experimental and instructional facilities. Nuclear Engineering/Health Physics Fellowships and Scholarships to Nuclear Science and Engineering Programs at Universities are provided.

Radiochemistry

DOE awards three-year grants to support education activities in the field of radiochemistry in the United States. Radiochemistry is linked to several national priorities including medicine, energy and national defense.

Nuclear Engineering and Science Education Recruitment Program

This program is designed to increase the number of students entering a university nuclear engineering course of study by developing a core curriculum to instruct high school science teachers in nuclear science and engineering topics through the use of teaching modules, teacher workshops and other outreach activities.

Summer Internships at National Laboratories

The Office of Nuclear Energy offers summer internships in technical areas related to nuclear engineering to undergraduate and graduate students at the Idaho National Laboratory.

International Student Exchange Program (ISEP)

The ISEP sponsors U.S. students studying nuclear engineering for 3-4 months abroad doing research at nuclear facilities in Germany, France, and Japan. These three countries send their students to the U.S. for reciprocal internships at DOE national laboratories.

B. Global Nuclear Energy Partnership (GNEP)

GNEP is a broadly scoped DOE program the goal of which is promoting beneficial international uses of nuclear energy through a multi-faceted approach. Many of the ideas explored earlier by INFCE are embodied in GNEP, which is essentially an updated expression and extension of those ideas.

DOE has entered a Notice of Intent (NOI) to Prepare a Programmatic Environmental Impact Statement (PEIS) for the Global Nuclear Partnership in the Federal Register [DOE, 2007]. This NOI gives a detailed statement of what is intended to be provided in the GNEP PEIS as well as considerable information on what DOE's concept of what GNEP itself is.

1. GNEP Goals

GNEP continues to evolve in response to new information, new international alliances, and changing program leadership. The general goals of GNEP as expressed by DOE in its strategic plan [GNEP, 2007a] are as follows:

> "The United States will build the Global Nuclear Energy Partnership to work with other nations to develop and deploy advanced nuclear recycling and reactor technologies. This initiative will help provide reliable, emission-free energy with less of the waste burden of older technologies and without making available separated plutonium that could be used by rogue states or terrorists for nuclear weapons. These new technologies will make possible a dramatic expansion of safe, clean nuclear energy to help meet the growing global energy demand."

DOE plans three facilities to implement GNEP:

(1) an industrial-scale nuclear fuel recycling center (Consolidated Fuel Treatment Center, CFTC) to separate the components of spent fuel required by GNEP,

(2) a reactor (Advanced Burner Reactor, ABR) to fission the actinides yielding fission products that are more readily managed while producing electricity. DOE is leaning toward a sodium-cooled fast reactor for the ABR.

(3) an advanced fuel cycle research facility (Advanced Fuel Cycle Facility, AFCF) to serve as an R&D center of excellence for developing transmutation fuels and improving fuel cycle technology.

Two approaches are being used to develop these three facilities. The CFTC and the ABR would be led by industry with technology support from laboratories, international partners, and universities. The AFCF would be located at a government site and research therein would be funded by DOE and led by the national laboratories to create the technology used in the CFCT and fuels for the ABR.

DOE expects that the components of GNEP would provide the following benefits:

- Expand domestic use of nuclear power and reduce dependence on fossil fuels;
- Demonstrate more proliferation-resistant fuel recycle processes;
- Minimize high-heat-output nuclear waste and thus obviate the need for additional U.S. geologic repositories before 2100;
- Develop and demonstrate ABRs to produce energy from recycled fuel;
- Establish reliable fuel services to participating nations by providing fuel on a lease-and-return basis;
- Demonstrate small-scale reactors;
- Develop enhanced nuclear safeguards by designing safeguards directly into nuclear facilities and reactors and by enhancing IAEA safeguards capabilities.

2. GNEP Timetable – phased approach

On August 3, 2006 DOE announced $20 Million for GNEP siting studies and sought further cooperation with industry through issuance of a request for Expressions of Interest (EOI) in licensing and building a CFTC and a ABR.

The GNEP program is phased. Each phase would begin after a decision based on the results of the previous phase and an assessment of the risks associated with proceeding to the next phase. DOE has stated that it will proceed to detailed design and construction of the GNEP facilities after it is confident that the cost and schedules are understood and after the project management framework that will allow these projects to succeed is in place. DOE plans a major decision on the future of GNEP in June, 2008 and has not been willing to specify potential schedules beyond this decision.

It is anticipated that NRC will regulate CFTC and ABR. The AFCF will be built on a DOE site and is not be expected to be licensed by the NRC. Because the GNEP policy and technological approaches to implementing the policy continue to change it is important that NRC have a strategy to accommodate the changes, both in allocating personnel and budgeting for the changes.

C. Russian "Equivalent" Proposal (Global Nuclear Infrastructure - GNI)

Russian President Putin put forward in 2006 a broad non-proliferation initiative called the Global Nuclear Infrastructure (GNI) envisioning the establishment of International Nuclear Centers, and offered to host the first such center in Russia. The proposed Centers would provide participating nations with full "nuclear fuel cycle services," including enriching uranium, fabricating fresh nuclear fuel, and storing and reprocessing spent nuclear fuel.

In states not possessing nuclear weapons, uranium enrichment and spent fuel reprocessing are activities permitted under the terms of the Nuclear Non-Proliferation Treaty (NPT), but they are considered to pose significant proliferation risks because they can provide access to weapons-usable nuclear material. The Russian Nuclear Center proposal would concentrate such activities in states already possessing nuclear weapons and limit the introduction of enrichment and reprocessing facilities in non-nuclear weapons states.

Russia has stated that it would be ready to set up a pilot international enrichment center. This center would provide non-weapons nuclear power states with assured supplies of low-enriched uranium for power reactors, giving them equity in the project, but without allowing them access to the enrichment technology. The existing uranium enrichment plant at Angarsk - the smallest of three Siberian plants - will feed the international center which will be under IAEA supervision. The material will be under safeguards. Russian legislation is needed to separate the facility from the defense sector and open it to international inspection, as well as to provide for a shareholding structure for other countries involved with the center.

GNI will be the first expression of President Putin's initiative which is in line with IAEA's 2003 proposal for Multilateral Approaches to the Nuclear Fuel Cycle (MNA). GNEP proposals involving such centers are very similar [WNA, 2006], and collaboration with the Russian initiative is anticipated.

D. Generation IV Nuclear Reactors

The Generation IV International Forum (GIF), was chartered in May 2001 to lead the collaborative efforts of the world's leading nuclear technology nations to develop next generation nuclear energy systems (reactors) to meet the world's future energy needs. This international effort reached a major milestone on February 28, 2005, as five of the forum's member countries signed the world's first agreement aimed at the international development of advanced nuclear energy systems.

Five distinctly different reactor systems were identified for development. Initial emphasis was to be placed on those reactors whose next generation would be evolutionary improvements of PWRs and BWRs rather than radical departures from existing technology. All five of the reactors have operating experience (PWR, BWR, Sodium Fast Reactors, and HTGR) or extensive research and development (MSR)

E. Nuclear Power 2010

The technology focus of the Nuclear Power 2010 program is on Generation III+ advanced light water reactor designs which offer advancements in safety and economics over the Generation III designs licensed by the Nuclear Regulatory Commission (NRC) in the 1990's. To enable the deployment of new Generation III+ nuclear power plants in the United States in the relatively near-term, it is essential to complete the first-of-a-kind Generation III+ reactor technology development and to demonstrate the use of untested Federal regulatory and licensing processes for the siting, construction, and operation of new nuclear plants. DOE has initiated cooperative projects with industry to obtain NRC approval of three sites for construction of new nuclear power plants under the Early Site Permit (ESP) process, to develop application preparation guidance for the combined Construction and Operating License (COL) and to resolve generic COL regulatory issues, to obtain NRC approval of COL applications. The COL process is a "one-step" licensing process by which nuclear plant public health and safety concerns are resolved prior to commencement of construction, and NRC approves and issues a license to build and operate a new nuclear power plant.

Although DOE is supporting industrial development of improved and advanced reactor designs there will be few if any new reactor construction starts before 2010. However, there has been a substantial number of operating license renewal applications. As of August 2007 the NRC had received license renewal applications for 57 reactor units and had approved 20-year license extensions for 48 reactor units. Utilities have indicated they intend to apply for new reactor construction and operating licenses in the near future.

VI. ADVANCED FUEL REPROCESSING TECHNOLOGY

In the early years of reprocessing in the U.S. the goal was to separate pure plutonium containing a high proportion of ^{239}Pu for use in nuclear weapons. Irradiations in the plutonium production reactors at the DOE Hanford and Savannah River sites for short irradiation times were carried out to minimize generation of undesirable higher mass number plutonium isotopes. As interest in commercial power-producing reactors grew, the emphasis changed from weapons plutonium production operating conditions to higher fuel burnups to maximize energy production and minimize cost. This emphasis led to a smaller proportion of weapons-grade ^{239}Pu and larger proportions of ^{240}Pu, ^{241}Pu, and ^{242}Pu in the spent fuel.

The DOE's ongoing reprocessing development program includes an interest in proliferation-resistant processes. One approach to increasing proliferation resistance is to eliminate the separation of a pure plutonium product. Other important goals for future reprocessing plants include minimizing the volume of radioactive wastes produced by the plant, decreasing losses of fissile and fertile elements to waste, most notably Pu and U, and removing heat-producing radionuclides in the HLW (^{137}Cs and ^{90}Sr in the relatively short term and the actinides, primarily Pu, Np, Am and Cm, in the long term). Many of the processes under development by DOE are not yet optimized with respect to minimizing the number of separation cycles or achieving the requisite separation efficiencies.

Figure B1 in Appendix B shows the relative contributions of fission products and actinides to the heat produced by PWR fuel irradiated to 51 GWd/MTIHM as a function of time out of the reactor. Upon examination of radionuclide contributions it is apparent that removing actinides, most notably ^{241}Am and Pu isotopes, greatly reduces the heat production in the waste from spent fuel reprocessing. This fact is the impetus for actinide removal in the UREX processes.

It is important to know the efficiencies of the separations processes used in the flowsheets. This information is obtained as nearly as possible through laboratory experiments with non-radioactive materials, followed by experiments with radioactive tracers, then with small amounts of irradiated fuel, and finally by small-scale integrated process experiments with irradiated fuel. At the same time the various pieces of process equipment are tested individually and then as integrated systems to ensure process goals will be met. These latter tests may be performed without using radioactive material, or with uranium only. Data from the laboratory and equipment tests are used to select and design pilot plant recycle facilities. These tests also yield data on separation factors[20], which are a measure of separations efficiencies for the suite of elements of interest. Besides uranium and plutonium, it is very important to have separations data on Cs, Sr, Tc, I, Np, Am, Cm and the lanthanide elements. The importance of these data derives from the fact that the extent of separation determines the distribution of these radionuclides among the products and waste streams and thus determines the need for additional cleanup or helps define disposal routes. Radionuclides, previously considered to be of little importance, that may be important in the future include tritium, ^{85}Kr and ^{14}C.

Because the power densities and fuel burnups in commercial power reactors have been

[20] Separation factor is defined as the concentration of the species of interest in the feed to one stage of the separation process divided by its concentration in the product of that stage of the separation process.

increasing steadily as more and more reliable information on reactor and fuel performance has become available, and because the half lives of the radioisotopes cover an enormous range, it is very important to know how much of each of them is produced and how long they are permitted to decay before designing the process or processes to be used in a reprocessing facility and the degree of separation required. Decay time is of particular importance in the case of ^{241}Am most of which grows in after the fuel is removed from the reactor as a result of ^{241}Pu decay.

All of this information goes into establishing mass balance and equipment flowsheets. With such a wide range of variables (fuel burnup, reactor neutron flux, radioactive decay, a very large number of radionuclides, degree of separation for individual radioisotopes or groups of radioisotopes, and equipment options) the number of possible flowsheets becomes very large. Considerations such as degree of separations sought, process simplicity, ease of process operation, cost, volume of wastes generated, safety, regulations, criticality, and proliferation resistance of the processes are helpful in winnowing down the processes that are actually worthy of study and adoption.

A. UREX Processes

GNEP has conceived of a suite of UREX processes, each of which consists of a series of steps designed to remove successively specific groups of radionuclides to tailor products and compositions of desired product and waste streams. The PUREX process can be modified readily to be the first step of any of the UREX (URanium EXtraction) processes (five variants have been considered in GNEP). This step is followed by processes to remove major heat-producing radionuclides from wastes going to the repository and to aggregate transuranic actinides for recycle. In particular, DOE has been focusing on the UREX +1a flowsheet which produces fissile material products that contain separated uranium in one stream and all the transuranic actinides in another. The transuranic actinides are to be fabricated into reactor fuel for transmutation and energy. There has recently been increasing interest in the UREX+2 flowsheet, which separates Am/Cm/lanthanides from the Pu/Np, and the UREX+3 process, which separates the lanthanides from the Am/Cm/lanthanide mixture.

One objective of the UREX processes is to increase the proliferation resistance of fuel recycle by avoiding the production of a pure plutonium stream and to fission plutonium and the other actinides to produce energy. A second objective is to remove the major sources of decay heat that limits the spacing of waste packages in a geologic repository. Figure B1 in Appendix B shows that the heat production rate of the actinides exceeds that of the fission products in the long term, and after about 70 years the predominance of the heat is produced by the actinides, illustrating the advantage of their removal from the waste sent to the repository. This illustrates the potential advantage of keeping the lanthanides with the actinides from the point of view of proliferation resistance. Any potential disadvantages subsequently arising during transmutation would need to be evaluated, but they are not expected to be large.

The UREX processes combine the modified PUREX process flowsheet with other solvent extraction processes that have many features in common. The PUREX process step is a modification of the conventional PUREX process in which the plutonium is prevented from being extracted with the uranium in the first UREX process step by adding a plutonium reductant to the first extraction cycle. Plutonium extraction is prevented by chemically reducing

extractable Pu(IV) to in-extractable Pu(III) using, for example, acetohydroxamic acid. Leaving the plutonium combined with other actinides and fission products should provide greater proliferation resistance than the PUREX process, wherein the plutonium is extracted with the uranium and subsequently separated from uranium and further purified. *It should be observed that a relatively simple change in the first UREX process step [failure to add the Pu(IV) reductant] would result in co-extraction of U and Pu, which would be essentially the PUREX process.* The acetohydroxamic acid functions also reduces neptunium so that it accompanies the other transuranic elements. This point is discussed further in Sect. III.A.4 where THORP process chemistry is discussed.

Several UREX variants have been identified and are presented in Table 15. Note that the variants involve increasing fractionation of the spent fuel consitutents as the number of the variant increases.

Table 15 Variants of the UREX Process

Variant Number	Prod # 1	Prod # 2	Prod # 3	Prod # 4	Prod # 5	Prod # 6	Prod # 7
Urex +1	U	Tc	Cs/Sr	TRU+Ln	FP except Cs, Sr, Tc, Ln		
Urex+1a	U	Tc	Cs/Sr	TRU	FP except Cs, Sr, Tc		
Urex+2	U	Tc	Cs/Sr	Pu+Np	Am+Cm +Ln	FP except Cs, Sr, Tc, Ln	
Urex+3	U	Tc	Cs/Sr	Pu+Np	Am+Cm	FP except Cs, Sr, Tc	
Urex+4	U	Tc	Cs/Sr	Pu+Np	Am	Cm	FP except Cs, Sr, Tc

NOTES: TRU = Transuranic elements: Np, Pu, Am, Cm, Bk, Cf

FP = Fission products

Ln = Lanthanide fission products: elements 58 (cerium) through 71 (lutetium)

The DOE's current reference process is UREX+1a. This variant removes the very long-lived fission product ^{99}Tc ($t_{1/2}$ = 2.12E05 yr), whose most common chemical species is the environmentally mobile pertechnetate anion (TcO_4^-), and the relatively short-lived, high-heat-producing fission products ^{137}Cs ($t_{1/2}$ = 30 yr) and ^{90}Sr ($t_{1/2}$ = 29 yr) from the fission product waste stream. In addition, the UREX+1a process routes all the transuranic elements and possibly some LEU into a single product stream for recycle to transmutation reactor. In the transmutation reactor they would be fissioned to produce energy and what is primarily a fission product waste, thus removing by transmutation the principal long-term heat producing actinides from the wastes.

As of early 2007, some UREX+1a experiments with irradiated fuel have been carried out, but

there have been no engineering-scale demonstrations. The difficulties associated with operating the four sequential solvent extraction processes in the UREX +1a flowsheet continuously have not yet been addressed. These difficulties are likely to pose serious operational challenges as one observes that all UREX variants require multiple processes operating sequentially, using differing extractants, different equipment, and different solvent cleanup and recycle processes. The staff operating such a plant will require extensive and expensive training. Additionally, if one of the separations process steps became inoperable, the entire plant would be shut down because the individual processes must operate simultaneously unless substantial inter-process surge capacity were included.

Flowsheet and process development is underway at ANL, INL, SRS and ORNL in hot cells at the benchtop scale and is planned at the kilogram scale to establish the viability of the various separations processes. This work, especially sequential process operation in the hot cells, is very important for establishing the feasibility and performance of the UREX+1a process. It will be necessary to accompany process development with engineering-scale testing of major equipment pieces and processes.

The UREX+3 variant is noteworthy because it yields Am and Cm as a product stream separate from the Np and Pu. This feature may be of importance, depending on how the ~55,000 tonnes of long-cooled spent fuel currently in storage at the reactor sites or spent fuel storage sites is phased into the reprocessing plant processing schedule along with the 2200 tonnes of spent fuel being generated annually from the existing 104 commercial power reactors (plus the fuel from any new reactors that come on line). Because of radioactive decay and their nuclear properties the Am and Cm from spent fuel aged 35 to 40 years is more efficiently burned in LWRs than in fast reactors [ORNL, 2007], a fact that has the potential to reduce the number of or to eliminate the need for fast reactors currently planned for transmutation of actinides to fission products.[21]

Figure 14 is a block diagram of the UREX+1a process which shows the process steps as the Head End, Central, and Tail End unit operations. The head-end operations include chopping the fuel elements into small pieces, fuel dissolution, and feed clarification to provide the input stream (H-5) to the central UREX +1a process. Additional head-end process steps will likely also include trapping and immobilizing the gases ^{85}Kr, ^{129}I, $^{14}CO_2$ and ^{3}H[22]. In addition, the hardware and hulls are shown to be compacted and packaged for disposal. These additional head-end steps are, with the exception of iodine retention and hardware and hull compaction, not current reprocessing practice.

[21] The results in ORNL/TM-2007/24 lead the authors to conclude "Because the ABR design has been optimized at ~840 Mwt, a large number (33-90) of ABRs would be required to transmute the ~23 MT/year TRU actinides currently produced in ~2000 MT/year of low-enriched uranium spent fuel; in comparison , 10-24 existing (or new) 3400 Mwt LWRs would be sufficient."

[22] The dissolver off-gas system for the THORP reprocessing plant has a 99% removal goal for iodine and 99.9% is routinely achieved. ^{14}C removal efficiency is similar.

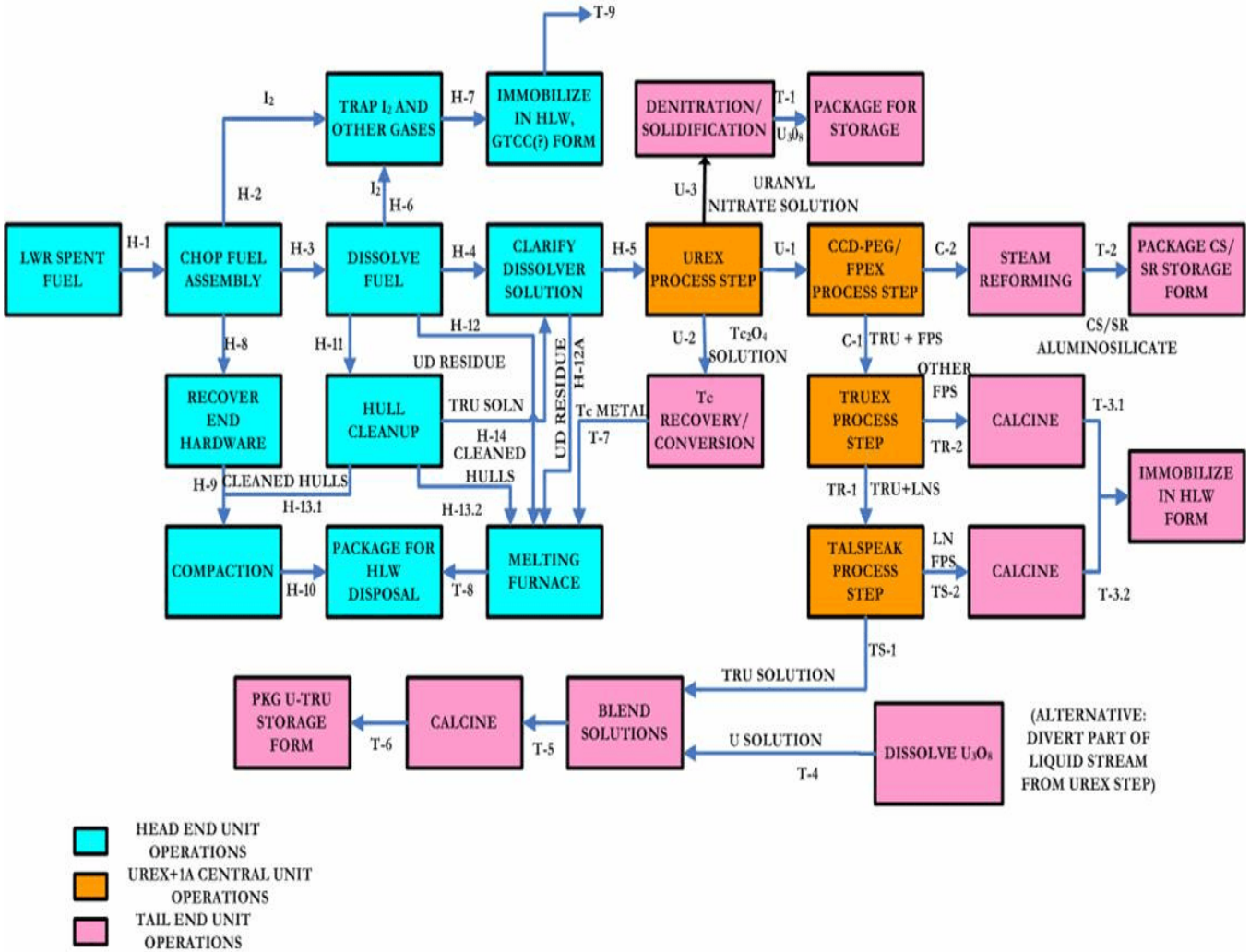

Fig. 14 Diagram of Primary UREX +1a Process Unit Operations

The central unit operation steps are discussed in detail below and provide the various streams for separation and intermediate storage. The U and Tc are separated from the dissolver solution in the UREX process step and then the Tc is removed by ion exchange. The uranium (urannyl nitrate) product stream undergoes denitration and solidification and packaging for storage. The Tc is converted to metal for disposal, presumably with the fuel cladding hulls. ^{137}Cs and ^{90}Sr are separated in the CCD-PEG process and stored as glass-bonded aluminosilicates after immobilization by steam reforming. The remaining fission products other than the lanthanides are separated by the TRUEX process, vitrified, and sent to interim storage. The TRU elements separated from the lanthanides in the TALSPEAK process may be blended with uranium for calcination, packaging and interim storage pending refabrication into transmutation reactor fuel. The lanthanides are combined with the other fission products. The waste forms and waste management strategy outlined here should be regarded as provisional. The DOE is preparing a waste management strategy [Wigeland, 2007] to better define the wastes resulting from UREX.

Figures 15, 16,17, and 18 show more details on the four major processes in this flowsheet.

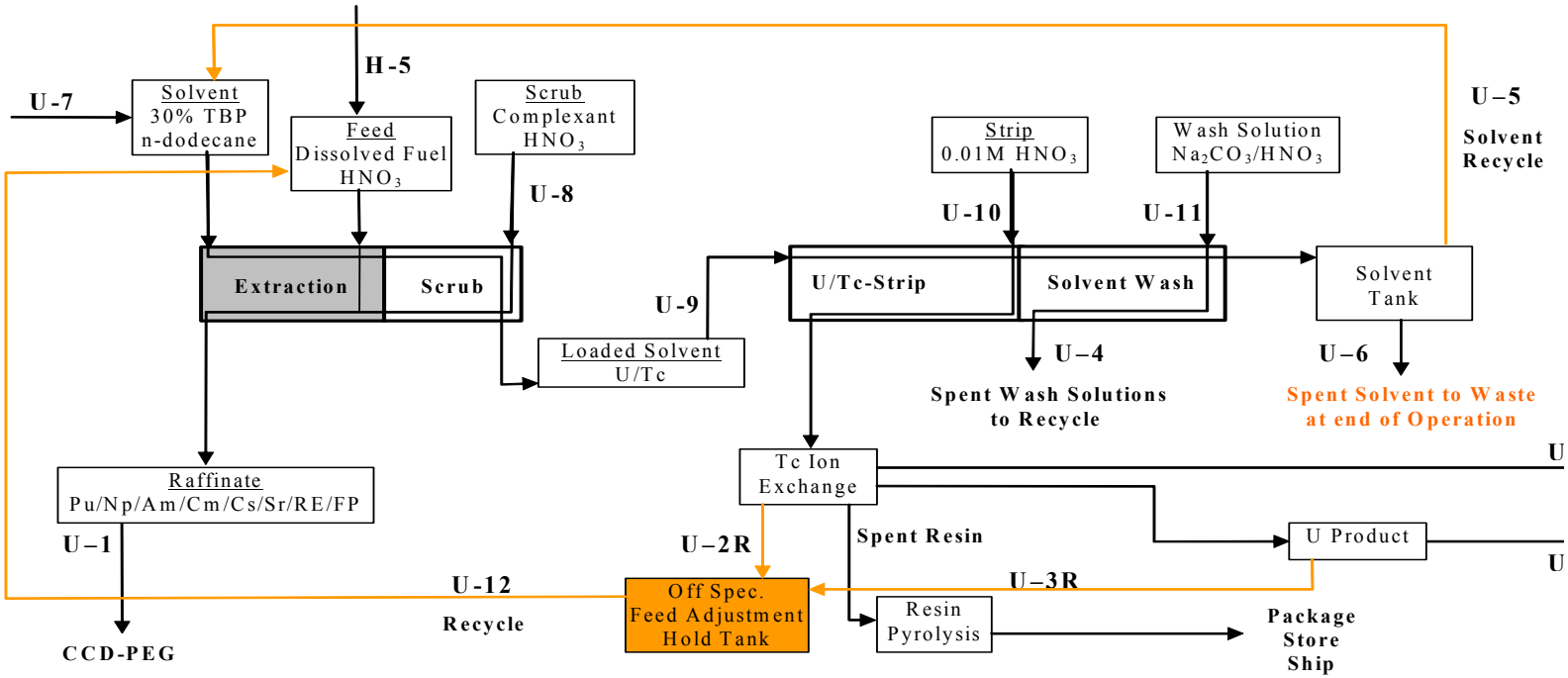

Fig. 15 Diagram of UREX+1a Step 1: Modified Purex to separate uranium product

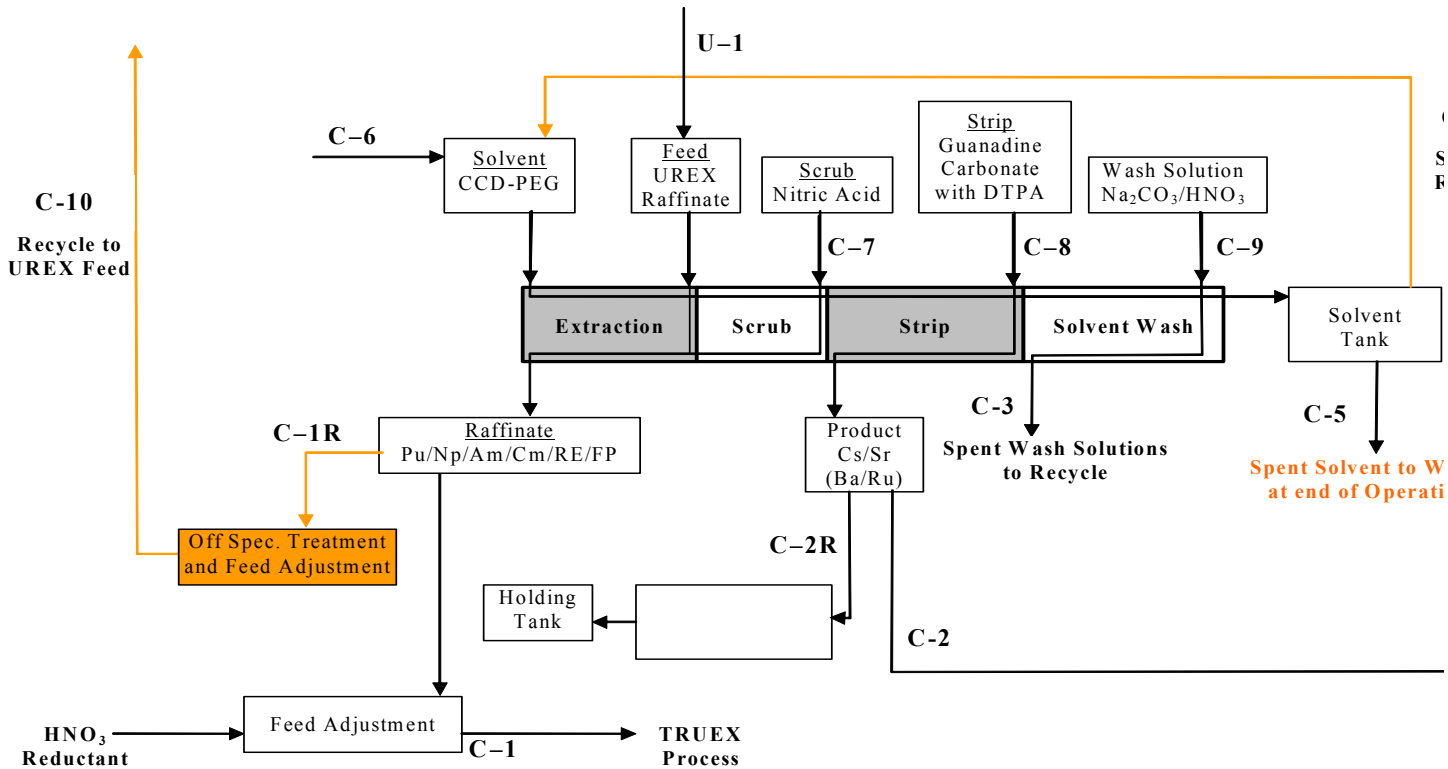

Fig. 16 Diagram of UREX+1a Step 2: CCD-PEG to remove Cs/Sr

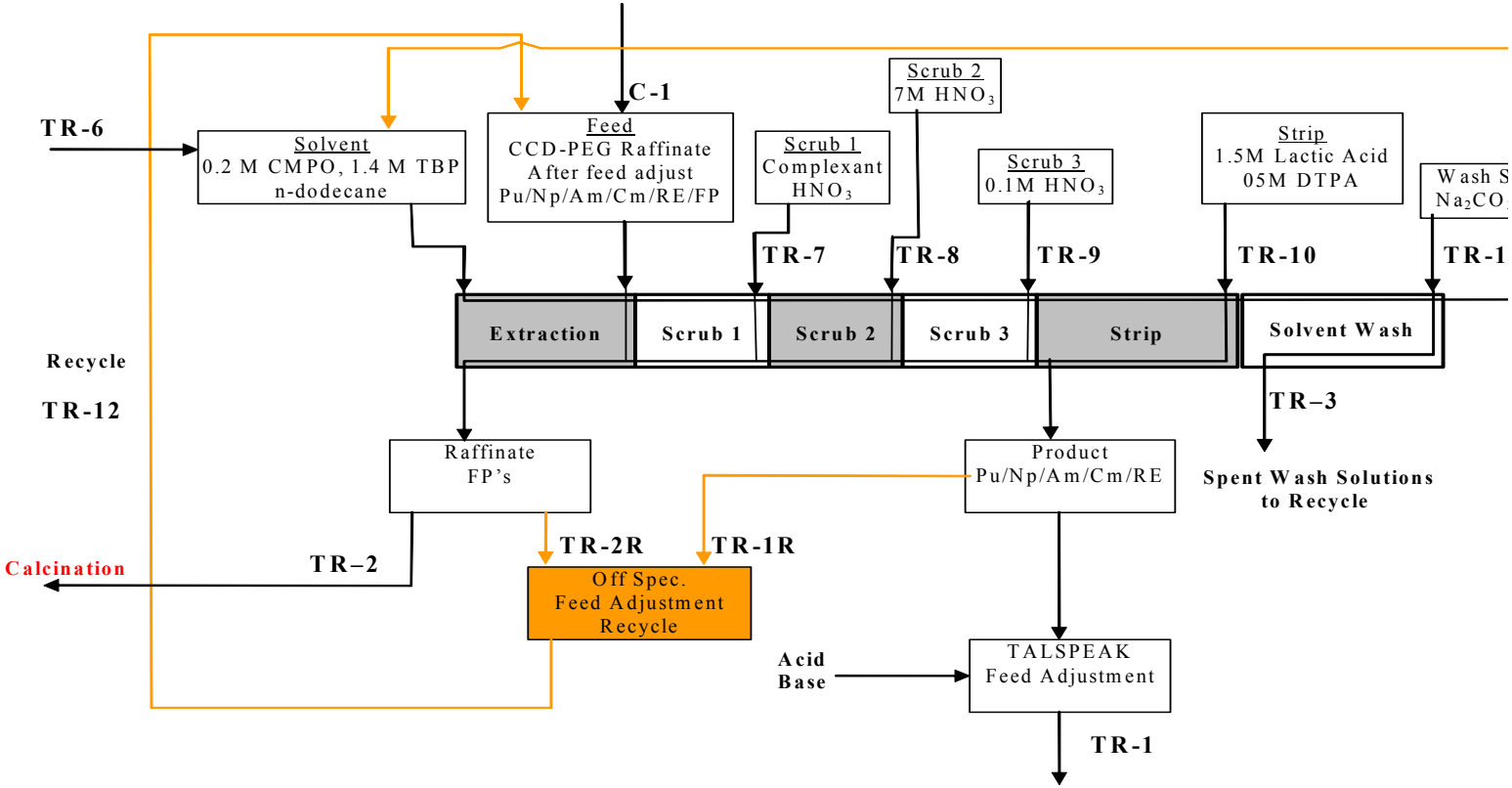

Fig. 17 Diagram of UREX+1A Step 3: TRUEX to remove non-lanthanide fission products

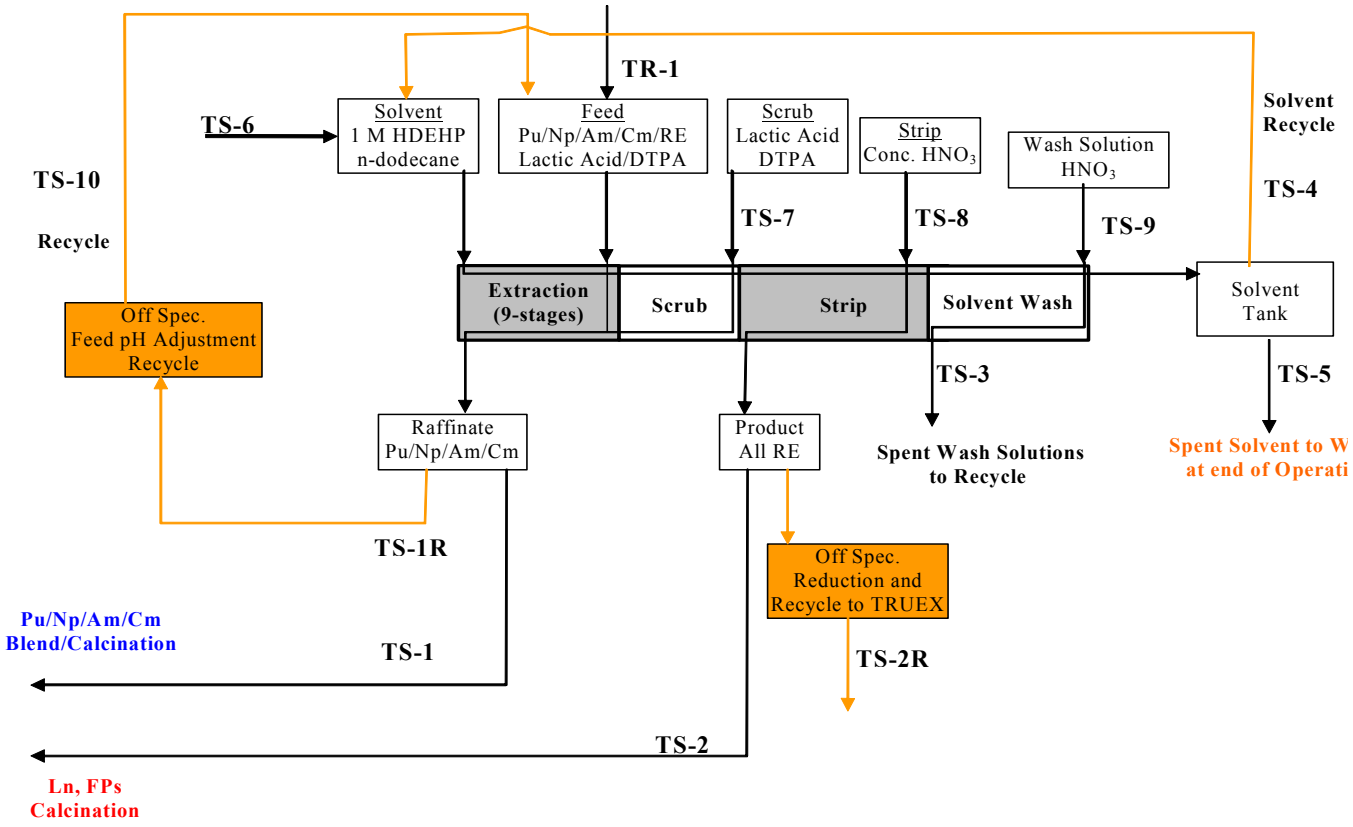

Fig. 18 Diagram of UREX+1a Step 4: TALSPEAK to remove lanthanides from TRU

1. Discussion of the UREX +1a Flowsheet

This section elaborates on the four process steps in the UREX +1a flowsheet culminating in a description of the products, wastes, and separation efficiencies in the process steps. Major intermediate process stream compositions, recycle streams, and waste streams, and their purity, and impurities are presented and discussed insofar as they are available as of February 2007 and are in the publicly available literature.

Although each of the four solvent extraction separations steps has been studied separately experimentally and some have reached advanced stages of development, very little data on the efficiency and operability of the integrated separations is available. It must be borne in mind that except for the UREX separation step for uranium and technetium, which is essentially a modified Purex process, no large-scale operating experience is available on the various steps of the UREX processes.

a. Head End

A description of key characteristics of a PWR fuel assembly that would constitute the feed to a reprocessing plant is given in Table 16.

Table 16 Typical PWR Assembly Composition

Fuel Assembly Component	Mass, kg
Fuel material	
Uranium (expressed as elemental U)	461.4
Uranium (expressed as the dioxide)	523.4
Hardware	
Zircaloy-4 (cladding, guide tubes)	108.4
Stainless steel 304 (end fittings)	17.1
Stainless steel 302 (plenum springs)	21.9
Inconel-718 (grid spacers)	5.9
Nicrobraze 50 (brazing alloy)	1.2
HARDWARE TOTAL:	154.5
FUEL ASSEMBLY TOTAL:	677.9

Note the large amount of hardware that must be disposed of as radioactive waste. In

conventional reprocessing of spent LWR fuel in the head end step the spent fuel is removed from the storage area and segmented prior to dissolving it in nitric acid in the head-end hot cell. The assembly may be broken down into individual fuel elements or sheared as a whole. Segmentation is typically done with a remotely operable shear that cuts the spent fuel elements or assemblies into pieces one-to-two inches long. This permits ready access of the nitric acid dissolvent to the oxide fuel pellets in the cladding.

During fuel segmentation and dissolution, gases or volatile fission products trapped in the fuel or present in the plenum space at the ends of the fuel elements are released into the hot cell off-gas system. The most important off-gas species from the point of view of waste management are ^{129}I, ^{85}Kr, ^{3}H, $^{14}CO_2$. The Zircaloy cladding hulls will contain an appreciable fraction of the tritium (as much as 41 %) as zirconium hydride. Some volatile RuO_4 may also be present in the off-gas. Although the radioactivity of Ru isotopes in aged spent fuel is low (1.851E-02 Ci/ MTIHM), the total mass of Ru is not negligible (8.691E+02 g/MTIHM). For this reason it deserves attention because it may interfere with recovering the important off-gas species noted above. Because of the ease of reduction of the volatile RuO_4 it may be removed from the off-gas by reduction and trapping on steel wool filters which become a waste.

With the exception of iodine trapping processes many of the candidate processes potentially applicable to reprocessing plants in the U.S. for trapping the other volatile fission products are in an early stage of engineering development and demonstration, although the technology of systems such as cryogenic are well known in other applications. Iodine trapping methods include scrubbing the dissolver off-gas in KOH solution, or highly concentrated nitric acid and mercuric nitrate solution, or trapping on solid sorbents, principally those containing silver with which iodine reacts to form highly insoluble AgI or $AgIO_3$. Sorption on charcoal has been used, but charcoal has significant drawbacks primarily due to its flammability. Only the very long-lived ^{129}I iodine isotope ($t_{1/2}$ = 1.57E+07 yrs) is of major consequence in spent fuel reprocessing because the other iodine isotopes are either very short-lived (^{131}I: $t_{1/2}$ = 8.02 days) or stable. A small fraction of the iodine may remain in the dissolver solids as AgI and PdI_2. This residue may be put into solution and subsequently into the off-gas by the addition of KIO_3 to the dissolver, but this would require another process step.

The only krypton isotope of radiological importance in SNF reprocessing is ^{85}Kr ($t_{1/2}$ = 10.72 yrs). Krypton removal has been studied using cryogenic distillation, sorption on zeolites and charcoal, and selective sorption in various liquids such as dichlorodifluoromethane (a refrigerant now out of favor because of its effect on the ozone layer). Diffusion through permselective membranes such as silicone rubber is also a candidate for krypton separation. Xe, which has negligible radioactivity in long-cooled fuel, has about 19 times the volume of krypton in the off-gas after 25 years decay. Both of these gases are chemically inert, and their physical properties are the basis of their separation from other gases. However, it is possible to separate krypton from xenon and thus reduce the volume of radioactive rare gas stored.

Tritium, ($t_{1/2}$ = 12.26 yrs) is a rare isotope in the natural environment. About two thirds of the tritium produced in LWR fuels is from ternary fission and one third from neutron activation. During aqueous reprocessing of spent LWR fuel any tritium that has not reacted with oxygen in the fuel or escaped as gas in the head end step will react with water in the dissolver producing tritiated water, HTO. A promising method for controlling tritium during fuel reprocessing is voloxidation [Goode, 1973a] which is described in more detail in Sect. VI.A.2.a. In voloxidation

the tritium is vaporized from the spent fuel by heating in air or oxygen before spent fuel dissolution in acid. The HTO thus formed may then be trapped in a dessicant such as silica gel or a zeolite. If tritium removal and containment is required for plant licensing, then voloxidation may be the removal method of choice. If tritium is not removed before acid dissolution of the fuel, then it exchanges with hydrogen in the acid in the dissolver solution to produce tritiated water whose disposal path would be through evaporation. This may not be an acceptable approach. In any case, the relatively short half-life of tritium means that after100 years it will have decayed to a very low level of radioactivity.

Spent fuel contains ^{14}C ($t_{1/2}$ = 5.73E+03 years) primarily produced from the ^{14}N (n,p)^{14}C reaction with the nitrogen that is typically present in the fuel at the 10-60 parts per million level. ^{14}C is produced at a rate of about 10-20 Ci/GWe/year of reactor fuel irradiation [Chopin, 1987]. Its removal is a straightforward operation in principle because the carbon will be present as $^{14}CO_2$, which is readily sorbed in a large number of sorbents such as KOH, CaO and molecular sieves (zeolites).

From the above discussion it is apparent that because of their short half lives neither krypton nor tritium is a long term hazard. Their storage for one hundred years would suffice to remove them from further concern. On the other hand, if capture and storage are imposed requirements for iodine and carbon, they will remain as long-term concerns. At present there are no generally accepted chemical forms or methods for their permanent disposal.

b. Central Unit Operations

i. UREX

The first step in the UREX+1a process is called simply UREX in this report. In the UREX step of DOE's UREX+1a process the uranium and technetium in solution[23] are separated by solvent extraction with tributylphosphate, typically as a 30% by volume solution in n-dodecane, from the other actinides, the lanthanides and the fission products. Technetium extracts along with zirconium as a complex species[24]. The addition of the reducing agent acetohydroxamic acid (AHA) in the process prevents the extraction of plutonium by reducing it to in-extractable Pu(III). After being stripped into an aqueous stream with nitric acid the uranium is converted to oxide for storage and subsequent use or disposal. If the AHA is omitted in UREX it becomes essentially the PUREX process because the uranium and plutonium would be co-extracted in purified form and can be readily separated.

The use of pulse columns for solvent extraction leads to process simplicity and reliability. However, centrifugal contactors can process a given amount of spent fuel faster and in a much

[23] The pertechnetate anion, TcO_4^-, is thought to form an extractable complex species with zirconium which upon extraction releases the pertechnetate ion which then forms a complex species with the uranyl ion (UO_2^{2+}) and remains largely, but not entirely, with the uranium stream.

[24] Notwithstanding the experience with incomplete extraction of Tc observed by others, in THORP it was found that essentially all of the technetium extracted with the uranium. By changes in process chemistry it was possible to strip Tc selectively from the uranium using high-acidity in a technetium contactor.

smaller space at the cost of increased complexity and somewhat decreased reliability. Specifically, centrifugal contactors cannot tolerate "crud" accumulation because it tends to block overflow orifices. A small amount of solid noble metals have been observed to precipitate slowly from the dissolver solution[25], and these could pose problems in a centrifugal contactor.

The volume of solid waste produced is related to the type of reagents used in reprocessing. For example, although the PUREX process uses tri-n-butyl phosphate (TBP), neither the TBP nor its degradation products can be converted entirely to gaseous products because of the presence of the phosphorus atom in the molecule. This can lead to a non-volatile solid waste.

The UREX+1a process removed the technetium from the acidic uranium product stream using an organic anion exchange resin (Tc is present as the TcO_4^- anion). The TcO_4^- anion is stripped from the resin and precipitated as finely divided metal using an alkaline solution of sodium borohydride or by reduction to metal in a furnace. After multiple uses and stripping to remove residual Tc the anion exchange resin is carbonized, packaged, and shipped off-site for disposal. The technetium metal may be converted to a final waste form by combining it with the washed and compacted cladding hulls from the head-end dissolution step. Alternatively, it could be combined with the dissolver heal of noble metals sludge and disposed of with that waste.

ii. CCD-PEG

The raffinate from UREX contains the actinides Pu, Np, Am and Cm as well as the lanthanides, ^{137}Cs, ^{90}Sr, and other fission products. The raffinate from UREX becomes the feed to process step 2, the CCD-PEG process [CCD-PEG, 2003], [CCD-PEG, 2006], where the Cs and Sr are separated from the actinides, lanthanides and fission products using a chlorinated cobalt dicarbollide-propylene glycol (CCD-PEG) solvent as extractant. The CCD-PEG process is most efficient when the feed is $\leq$ 1 M nitric acid so it can be used directly on the low-acidity UREX process step raffinate. The separated Cs and Sr may be solidified in several ways, including as stable alumino-silicate waste in a steam reforming process using an incorporated clay such as kaolin to reduce the solubility of the Cs and Sr.

iii. TRUEX

The raffinate from process step 2 becomes the feed to process step 3, the TRUEX process [TRUEX, 1998], where the transuranic actinide and lanthanide elements are extracted from the remaining fission products using a TBP- carboxylmethylphosphine oxide (CMPO) in *n*-dodecane extractant. The actinides and lanthanides are stripped from the extractant with lactic acid. The strip solution becomes the feed to the next and final UREX+1a process step.

iv. TALSPEAK

[25] Although this delayed precipitation of noble metals has been observed in early work at ORNL, it has not been observed in THORP operations, even though it was specifically looked for.

The strip solution (raffinate) from the TRUEX process containing the actinides and lanthanides becomes the feed to process step 4, the TALSPEAK process, where, after feed adjustment, the lanthanides are extracted from the actinides [TALSPEAK, 1964], [TALSPEAK, 1999]. The TALSPEAK process performs the difficult separation of actinides and lanthanides, whose chemistries are very similar. This solvent extraction separation process is carried out using Di-2-ethylhexylphosphoric acid (HDEHP) in *n*-dodecane as extractant, with lactic acid and diethylenetriaminepentaacetic acid (DTPA) as complexants and concentrated nitric acid as a stripping agent. Very careful control of pH at about pH 3 and careful control of organic-to-aqueous process stream phase ratios are required to effect the desired separation.

The TALSPEAK process relies on the difference in the strengths of the respective complexes formed by the lanthanides and the actinides with DTPA to achieve their separation. The DTPA complexes are not extracted. Because a much smaller fraction of the lanthanides are complexed, a larger fraction of them is extracted by the HDEHP.

The following chemical reaction shows the strong dependence on pH of complex formation with DTPA.

$$M^{n+} + H_5DTPA \rightarrow MDTPA^{(5-n)-} + (5-n)\ H^+$$

Here M represents the actinide or lanthanide ion, n is the valence of the species involved, and H is hydrogen in the reaction. From this equation it is apparent that for trivalent ions there is a square dependence on the hydrogen ion concentration. Thus, if the pH goes from 3 to 4, i.e., if it changes a factor of 10, the equilibrium shifts a factor of 100 to the left, assuming all else stays the same. This helps explain the exceptional sensitivity of the TALSPEAK process on pH.

v. Products and wastes

The transuranic elements are in the raffinate from the TALSPEAK extraction cycle. They are to be solidified, possibly in combination with some of the uranium, packaged, and stored until shipment off-site for subsequent refabrication into fuel for transmutation. The lanthanides and residual fission products are in the strip stream and are solidified, packaged, and stored until the time of final disposal.

The lanthanides (also called rare earths) are the radionuclides selected by both the UREX processes and the French GANEX (see Sect. V.D.) process for separation from the actinides because of their interference with efficient recycle and reuse of the actinides.

Cesium and strontium wastes are to be put into a stable chemical form and stored for their eventual decay to levels acceptable for near-surface disposal. In this scenario it will be necessary to provide monitored storage space for the cesium and strontium for an extended time.

It is noted that a small amount of fluoride (~0.01 M) is used in the dissolution step because after

fuel dissolution the acidity is reduced during feed adjustment to the point that fluoride ion is needed to prevent hydrolysis (through complexation) of some of the radionuclides. Although not listed in the flowsheets, fluoride ion appears in the feed and the raffinate streams in all the process steps. Fluoride ion can exacerbate corrosion, especially in equipment like the dissolver and the waste vitrifier.

2. Process assumptions for modeling the UREX +1a flowsheet

In order to calculate the distribution of radionuclides among the waste and product streams it is necessary to make some assumptions about separation factors achieved in the process steps. There has been considerable experience in reprocessing, and some separation factors are known for common processes like PUREX. However, the major spent fuel reprocessors, e.g., France and the UK, consider the separation factors to be proprietary information. There are, however, certain limits on the concentration of radioisotopes in wastes that are specified in the U.S. Code of Federal Regulations or consensus product specifications. In the absence of data on separation factors, these limits may be used as criteria that must be met, and thus as specifications for the wastes. Additionally, for some of the less common UREX+1a process steps, e.g., CCD-PEG, TRUEX, and TALSPEAK, there are publications that contain information from laboratory experiments or on limited plant experience that may be used to derive separation factors. All of these sources of information, along with information from burnup calculations made with ORIGEN2 [Croff, 1980] and the judgment of the authors, was used to obtain the information in Appendix F.

The following sections discuss the most important product, effluent, and waste streams that would be produced by a reprocessing plant using a UREX+1a flowsheet.

a. Off-gas effluent stream

All plant operating areas have off-gas systems that capture the gases and vapors leaving the area and treat them before they are vented to the atmosphere. In general, air flows from areas of low radioactivity to areas of higher radioactivity to reduce contamination. Each vented radionuclide has a different biological effect on the human body, and this must be taken into consideration when deciding what remediation action to take for that radionuclide. In general the radionuclides in the off-gas must be retained at least to the level of retention required by the regulations. These limits and technologies proposed to meet them and to retain the radionuclides for storage and disposal have been discussed [ANL, 1983; DOE, 1986; Goode 1973 a,b; IAEA 1980, 1987, 2004; Wigeland 2007].

The most important reprocessing off-gas streams are those from the spent fuel shear and the dissolver. It is these streams that contain the bulk of the radioactive gases and vapors (tritium, krypton, iodine, carbon dioxide, ruthenium, particulates and aerosols) as well as hazardous chemical species (nitrogen oxides). Other important off-gas streams are those from the fission product and lanthanide waste calcination (if used) and vitrification steps, which are not examined in this paper. Numerous specific technologies can be used to remove these species from off-gas streams. The sequence of and description of processes selected here is taken from [IAEA, 2004] for tritium and ^{14}C is as follows:

- Tritium: To be effective recovery of tritium must occur before the spent fuel encounters substantial amounts of water such as the dissolver solution to prevent isotopic dilution of the tritium with large amounts of ^{1}H in water. As a consequence, tritium removal and recovery occurs immediately after the spent fuel is chopped (sheared) into segments using the voloxidation (volume oxidation) process. This process depends on the oxidation of the UO_2 spent fuel matrix to lower-density U_3O_8 in order to break down the fuel matrix crystal lattice and release trapped gases from it. Voloxidation is unlikely to be effective with thorium-based fuels because thorium does not have a higher valence state to which it can be oxidized. Voloxidation is implemented by heating the spent fuel segments to 450 – 500 °C for several hours in a rotary kiln. The tritium in the evolved gas is passed through a catalytic converter to yield tritiated water which is then removed from the off-gas by solid dessicants. Essentially all of the tritium is released from the spent fuel (but not necessarily from the Zircaloy hulls) and much smaller fractions of other volatile species are released as well. If dehumidified oxygen is used in the kiln then the recovered tritium will be very concentrated. To the extent humidity is introduced the tritium will be diluted and the volume of the tritium waste form increased.

  Development of voloxidation had largely ceased for about two decades at the end of the 1970s. However, DOE is now supporting work in the U.S. and South Korea to further develop voloxidation, and this is supplemented by South Korea's collaborative effort with Canada to develop the DUPIC process (see Sect. III.A.2.g). The goal is to maintain the high release rates for tritium while increasing release rates of other volatile species. Variations being examined include use of temperatures up to ~800 °C, use of some combination of air, ozone and steam to oxidize the fuel, and cycling between oxidizing conditions and reducing conditions imposed by hydrogen gas in the voloxidizer.

  Important open technical issues concerning voloxidation are the extent to which tritium is evolved from zirconium tritide formed in the Zircaloy cladding during voloxidation and the extent to which other volatile species will be evolved from the fuel matrix. Also, the effectiveness of voloxidation on fuels containing high concentrations of TRU elements such as those that might be used in a transmutation reactor is largely unknown.

- Iodine, Ruthenium, Aerosol, Particulates, and Nitrogen Oxides: After voloxidation the spent fuel segments are loaded into a dissolver containing concentrated nitric acid which results in evolution of the other volatile radioactive and hazardous species listed above into the off-gas from the dissolver vessel. The next step in treating the off-gas is to remove aerosols and particulates, nitrogen oxides, ruthenium, ^{129}I, and then more nitrogen oxides in that order. This is accomplished by passing the off-gas through a water scrubber and de-entrainer to remove most of the nitrogen oxides as well as aerosols and some particulates. The off-gas is then heated above its dew point, passed through a silica gel bed to absorb ruthenium[26] and a HEPA filter for additional particulate removal. The off-gas stream is passed through sequential beds of silver zeolite to remove iodine. Although iodine decontamination factors of greater than 99.5% have been achieved [Davidson, 2007], it has not yet been shown that large reprocessing plants in the U.S. will

[26]The significant radioactive isotope of ruthenium (mass number = 106, half-life = 1 year) is only relevant in fuels aged less than ~10 years before reprocessing, which will not be the case in the U.S. for many years. However, non-radioactive ruthenium removal may still be needed to prevent clogging the off-gas system.

actually be able to achieve this performance using the proposed processes.[27] Finally, the off-gas is further heated, mixed with ammonia injected into the waste stream, and passed through a zeolite bed which decomposes the residual nitrogen oxides and ammonia to nitrogen and water.

Alternative iodine removal technologies have been developed and demonstrated or used in small-scale plants. The advantages and disadvantages of various iodine removal processes are discussed in [DOE, 1986] and [IAEA, 1987]

- Carbon-14: The off-gas from the iodine removal step flows through two molecular sieve beds connected in series for water removal followed by two zeolite beds connected in series for CO_2 removal. Water is removed from the sieves by reducing the pressure. A similar approach is used for the zeolite beds containing the $^{14}CO_2$. The resulting concentrated carbon dioxide stream is routed to a scrubber where it bubbles through a saturated solution of $CaOH_2$ to form insoluble calcium carbonate containing the ^{14}C. The calcium carbonate is recovered using a vacuum filter, dried, and stabilized in drums.

- Krypton-85: The off-gas feed stream to the krypton recovery system consists primarily of air with small amounts of water, nitrogen oxides, radioactive krypton, and stable xenon. The oxygen in the air is removed by reacting it with hydrogen in a catalytic recombiner. The gas is refrigerated to condense some additional water and then passed through silica gel for final water removal. The off-gas then enters a cryogenic absorption, stripping, distillation, and recovery process. Liquid nitrogen is the primary working fluid to enrich the krypton concentration relative to that of xenon from about 7% at the outset to about 80% in the product. The krypton-xenon product is then packaged for disposal. More information on krypton management can be found in [IAEA, 1980].

- Particulates: The final off-gas treatment step is additional HEPA filtration to remove remaining particulates and aerosols.

b. Technetium stream

Because of the importance of technetium as a long-term contributor to dose if it reaches the biosphere it is important to decide how it should be managed. It is not clear how completely it will be recovered in the UREX processes because it does not extract quantitatively with the uranium in the first process step. Also, as much as 15 % of it may become part of a noble metal (e.g, Pd, Ru, Rh, Pt) sludge in the spent fuel dissolver, in which case that portion could be managed differently than combining it with the cladding hulls as is shown in the UREX +1a flowsheet. The answer to these questions must await more definitive experimental information obtained from an integrated engineering flowsheet demonstration and optimization. It should be noted that foreign reprocessors, e.g., the UK in their THORP plant, appear to have found a way to make the dissolved Tc extract quantitatively with the uranium product which may facilitate its separation and subsequent management (see Sect. III.A.3.g).

[27]The THORP is achieving an iodine decontamination factor of > 99.5% but it is primarily relying on caustic scrubbing which is unlikely to be used in the U.S. unless it is released to the sea.

c. Uranium product stream

The uranium product stream contains 2097 tonnes of uranium (as uranyl nitrate) annually from a 2200 MTIHM/year reprocessing plant. There will need to be a substantial uranyl nitrate denitration system to convert the liquid uranyl nitrate to solid uranium oxide. Denitration will produce nitrogen oxides which must be recovered to prevent escape of toxic NO_x gases to the atmosphere. There is also the option of making nitric acid from the oxides.

d. Solvent waste streams

There will be enough radioactivity in the solvent wastes streams to require care in their disposal.

As noted earlier, each UREX process step has a different solvent, probably requiring a different solvent waste cleanup system for each solvent. As the solvents need to be replaced, solvent waste streams will be produced. It is possible that incineration may be an acceptable means for treatment of most of them because almost all the solvents are organic compounds. However, UREX and TALSPEAK process steps contain solvents (i.e., TBP and HDEHP) that cannot be completely oxidized to gaseous compounds.

e. Fission product stream

The fission product waste stream, as the term is defined in this paper, contains all the fission products except cesium, strontium, technetium, iodine, krypton, tritium, and carbon. These wastes are primarily the lanthanides and are the remaining wastes to be vitrified, packaged, stored and ultimately sent to a deep geologic repository.

f. Cs/Sr stream

^{137}Cs and ^{90}Sr pose a special and significant waste management problem. Together they are a major short-term heat producer (see Appendix F and the graph in Appendix B), because they account for more heat and more radioactivity than all the other radionuclides for several decades. ^{137}Cs is a source of penetrating radiation[28] and merits special attention. It is apparent that the cesium and strontium comprise a major waste management problem. The Cs/Sr is to be fixed in a chemically stable waste form, packaged, stored for about 300 years for to allow it to decay to less-than-Class C concentrations, and then disposed of in place.

g. Actinide Stream

The actinides are the principal useful product of the reprocessing plant as well as being a principle heat source (see Appendix F and the graph in Appendix B.) About 27.7 tonnes per

[28] Although the ^{137}Cs itself is not an important source of radioactivity (beta rays of <40 Kev), 92 % of it decays to ^{137m}Ba which decays with a half-life of 2.55 minutes; 90% of the ^{137m}Ba decays to yield a 0.662 Mev gamma ray, which is the source of penetrating radiation.

year of actinides from a 2200 MT/yr reprocessing plant (exclusive of any uranium that might be added) will need to be packaged, stored, and ultimately sent to a reactor for transmutation to fission products, which themselves will, after reprocessing, be added to the fission products already produced in the original irradiation that produced the spent fuel.

h. LaHague Reprocessing Plant Effluents

It is instructive to note the liquid and gaseous releases from the AREVA spent nuclear fuel reprocessing plant at LaHague, France. The LaHague plant is one of the world's major reprocessing plants with many years of practical operating experience and process improvements. The LaHague UP3 plant liquid releases of important radionuclides are shown for 2006 in Table 17 below [AREVA, 2007]. Gaseous releases are shown in Table 18 [AREVA, 2007].

Table 17. LaHague Reprocessing Plant Radionuclide Liquid Releases to the Sea in 2006

Radionuclide	**TBq* released**	**TBq yearly limit in France, (Ci)**	**% of limit**
Tritium	11100	18,500 (5e+5)	59.81
^{14}C	7.46	42 (1.13e+02)	17.76
Radioiodine	1.34	2.60 (7.03+01)	51.62
^{90}Sr	0.216	2 (5.4e+01)	10.8
^{134}Cs	0.0605	2 (5.4e+01)	3.03
^{137}Cs	0.623	2 (5.4e+01)	31.15
^{106}Ru	4.8	15 (4.05e+02)	31.98
^{60}Co	0.21	1 (2.73+01)	21
Other β and γ	5.24	30 (8.10e+02)	17.45
α	0.025	0.1 (2.7e+00)	25.01

* TBq: terabecquerels (10^{12} disintegrations per second); 1 terabecquerels = ~27 curies

Table 18. LaHague Reprocessing Plant Radionuclide Gaseous Releases to the Atmosphere in 2006

Radionuclide	**TBq released**	**TBq yearly limit in France, (Ci)**	**% of Limit**
Tritium	67.8	150 (4.05e+03)	45.22
Radioiodine	0.00681	0.02 (5.4e-01)	34.04

Noble gases	242000	470,000 (1.27e+07)	51.58
^{14}C	14.2	28 (7.56e+02)	50.7
Other β and γ	0.000106	0.0010 (2.7e-02)	10.6
α	0	0.00001 (2.7e-04)	17.3

From the above tables it is apparent that all releases from La Hague reprocessing are less than allowable release limits in France. Additionally, radionuclide releases from the LaHague plant to the atmosphere are in general much less than those to aqueous discharges from the plant. ^{14}C, which is released as CO_2 and is a soft beta emitter, is an exception. The noble gases have short half lives and are not biologically active.

3. Quantitative Analysis of UREX +1a Waste and Product Stream Characteristics

The purpose of this section is to provide the results of an illustrative calculation of the typical radioactive and physical properties of the waste and product streams from the UREX+1a flowsheet. The purpose of such calculations is to approximate the characteristics of typical UREX+1a wastes as a basis evaluating what needs to be done to develop an appropriate regulatory framework for recycle facilities. Such calculations are based on a large number of assumptions concerning, for example, the age and burnup of the SNF fed to the process, separation factors for key radionuclides for each step in the process, and the chemical form, stabilization matrix, loading, and density of the final product or waste forms.

The burnup distribution of the spent LWR fuel in 1999 as a function of age is shown in Fig 19 [Kouts, 2007]. As is evident, the age and burnup cover a wide range. Adjusting the age distribution for time elapsed since 1999 leads to the average age of SNF currently in storage being about 25 years. Reprocessing SNF would slow or reverse the trend of increasing SNF age depending on whether SNF were to be reprocessed at a greater rate than it was being produced. However, the likely initiation of reprocessing at least a decade away which will make the average feedstock commensurately older. Additionally, with SNF being produced at a rate of 2100 MT per year it would take the equivalent of three large (~800 MT per year throughput) SNF reprocessing plants just to stabilize the aging of the SNF inventory. Achieving this throughput appears to be some distance in the future because DOE has stated that the throughput of the CFTC should be "able to be increased to approximately 2,000 to 3,000 metric tons per year to support commercial operation." [DOE, 2006a]. In a notice requesting expressions of interest in the CFTC [DOE, 2006b] the U.S. Department of Energy implies that the initial throughput will have a value below this range.

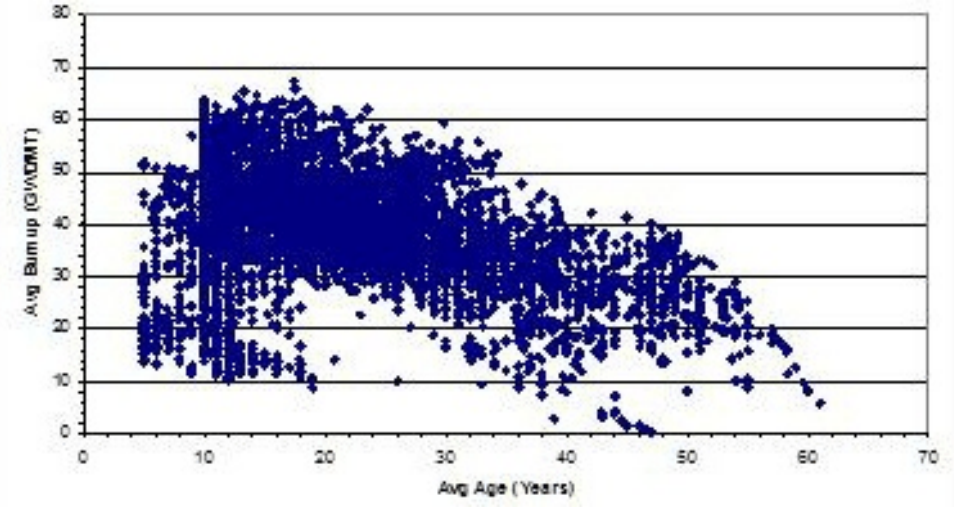

Fig. 19 Distribution of U.S. spent nuclear fuel in 1999 as a function of age

The average burnup of stored LWR SNF at the end of 1998 was 30.4 GWd/MT and at the end of 2002 (the latest report) this had increased to 33.6 GWd/MT [EIA, 2004]. The trend of increasing burnup seems likely to continue as utilities seek to get more energy out of their fuel, although high uranium or enrichment costs could mitigate the trend.

On balance, a burnup of 33 GWd/MT has been selected because this value is close to the current average burnup. Additionally, this assumption was efficient and facilitated verification of calculated results by allowing the use of existing PWR models for which published results were available. Given the speculative nature of assumptions concerning when reprocessing might ensue and the rate at which capacity will be built, a SNF age of 25 years was selected.

In order to calculate the waste compositions and characteristics it was necessary to use values for separation factors of the various radionuclides in the process steps as well as waste form densities and loadings. In most cases reliable values for separation factors from plant operating data are not available. These are usually considered to be proprietary by plant operators, although some data from early reprocessing have been published. There are also some data reported in the early literature and data from laboratory experiments using fully irradiated fuel for processes like CCD-PEG, TRUEX and TALSPEAK. However, the entire UREX+1a flowsheet has not been demonstrated on SNF at a scale that provides a foundation for assumptions concerning separation factors. Regarding parameters concerning waste form characteristics, in many cases fundamental decisions (e.g., which waste form will be used) have not been made. Based on evaluation of the results of UREX+1a experiments performed to-date and the historical and current literature concerning waste forms by independent experts, the assumed parameters in Appendix F were assembled. Values in Appendix F were used to calculate the waste stream compositions amounts using ORIGEN2. The results of these calculations are given in Table 19.

During review many comments indicated the desire for additional detail on the composition of internal plant streams that might be important to safety. While the quest for such data is understandable, the UREX+1a flowsheet is not yet sufficiently mature to allow such compositions to be determined. Additionally, such information is likely to be deemed sensitive and/or proprietary and could not be included in a public document such as this. As a consequence, no information has been included at this level of detail.

Table 19 Compositions and Amounts of Waste Streams

	AMOUNT PER MTIHM FROM ORIGEN2				FINAL OUTPUT STREAM CHARACTERISTICS				
OUTPUT	**Grams**	**Curies @ 25 yrs**	**TRU α curies @ 25 yrs**	**Watts @ 25 yrs**	**Density, g/cc**	**Grams nuclide/ Gram Waste**	**Waste Volume L/MTHM**	**TRU nCi/g**	**Classification/ Relation to Class C[j]**
Volatiles Released									
T	0	0	0	0					
C	0.013	0.01	0	0					
Kr	0.7	277	0	2.35					
I	0.9	0	0	7e-08					
Volatiles in Waste									
T[a]	0.021	201	0	0.01	2.2	0.079	0	0	Class B/ 4e+8x[k]
C[b]	0.133	0.592	0	0	1.6	0	1.81	0	GTCC/ 41x
Kr[c]	4	1570	0	2.35	0.005	0.011	77.4	0	Class A/ Not Listed
I[d]	177	0.031	0	0	2.1	0.0414	2.4	0	GTCC/ 163x
Cladding + Tc[e]	296000	1020	3.33	4.97	6.8	1	43.5	11000	GTCC/ 220x
U Product[f]	953000	8.21	0.01	0.088	3.5	1	272	5	Class A/ 0.05x[n]
TRU Product[g]	12600	44400	6654	222	10.8	1	1.17	5.3e+08	HLW/ 5e+6x
Cs/Sr Waste[h]	5150	154000	0	328	1	0.27	19.1	0	HLW/ 1570x[o]
Fission Product waste[i]	19700	42300	1.41	235	2.65	0.38	19.6	27000	HLW/ 270x
Spent Nuclear Fuel	1.45e+6[l]	242600	6660	789	5	1	403[m]	4600000	HLW/ 46000x

[a]tritiated water in polymer-impregnated cement

[b]Calcium carbonate in cement

[c]Compressed gas in cylinder

[d]Grouted silver zeolite

[e]Homogeneous alloy of structural material, dissolver solids, Tc, and some undissolved fuel

[f]Uranium oxide having concentrations of other radionuclides suitably low to allow re-enrichment

[g]Oxides of the various elements sintered to 95% of theoretical density

[h]Glass-bonded aluminosilicate made by steam reforming

[i]Vitrified into borosilicate glass logs

[j]Apparent waste classification/ratio of sum-of-the fractions for material to Class C limits if material is declared to be waste

[k]Assumes no dilution of tritium with hydrogen isotopes other than those produced in the fuel matrix

[l]Includes oxygen associated with fuel matrix

[m]Volume of a single intact PWR SNF assembly (21.4 cm x 21.4 cm x 406 cm) normalized to 1.0 MTHM. Volume of an intact assembly in a canister would be 635 L/MTHM.

[n]Assumes that recycle uranium specifications are met for TRU and that Tc concentrations are typical of THORP experience (0.03 ppmw). TRU element concentration can increase about two-fold before Class C levels are reached and about twenty-fold before the uranium would be GTCC.

[o]Waste is HLW because it is derived from the first cycle raffinate unless DOE determines it is waste incidental to reprocessing.

The following sections will discuss waste-specific aspects of Table 19. One generic aspect of Table 19 concerns deciding which materials would be HLW if they were declared to be waste. The current definition of HLW [NWPA, 1996] is:

> "The term "high-level radioactive waste" means –
>
> (1) the highly radioactive material resulting from the reprocessing of spent nuclear fuel, including liquid waste produced directly in reprocessing and any solid material derived from such liquid waste that contains fission products in sufficient concentrations; and
>
> (2) other highly radioactive material that the Commission, consistent with existing law, determines by rule requires permanent isolation."

Key terms such as "highly radioactive" and "fission products in sufficient concentrations" have not been further elaborated. Additionally, the Commission has not identified any "other highly radioactive material" that requires permanent isolation. The preceding definition has been interpreted in 10 CFR 50, Appendix F as follows:

> " . . .''high-level liquid radioactive wastes'' means those aqueous wastes resulting from the operation of the first cycle solvent extraction system, or equivalent, and the concentrated wastes from subsequent extraction cycles, or equivalent, in a facility for reprocessing irradiated reactor fuels."

Conventionally, HLW has been taken to include the raffinate from the first cycle of solvent extraction in a Purex facility. This would include essentially all of the non-volatile fission

products, Np, Am, and Cm plus a small fraction of the U and Pu. High-level waste would not include cladding and other fuel assembly structural materials or volatile species because these are removed before the first solvent extraction cycle. Additionally, HLW would not include organic wastes (e.g., spent solvents) or aqueous wastes from subsequent solvent extraction cycles such as those used to purify the uranium product. Despite the potential exclusion of aqueous waste from subsequent solvent extraction cycles from being classified as HLW, historical designs for Purex reprocessing plants have typically found it convenient to concentrate some of the more active waste streams from parts of the reprocessing plant other than the first solvent extraction cycle and combine them with the aqueous waste from the first cycle of solvent extraction and manage them all as HLW.

The existing definition of HLW was not conceived with the UREX flowsheets in mind. In particular, part of the UREX+1a product (the transuranic actinide elements) is initially in the aqueous waste from the first cycle of solvent extraction and only becomes a separate product stream after going through three subsequent solvent extraction processes. Additionally, separation of Cs/Sr from the aqueous waste from the first cycle of solvent extraction raises the question of whether the separated Cs/Sr is HLW. Based on historical and recent (e.g., concerning "waste incidental to reprocessing") interpretations of what constitutes HLW, this paper assumes that any material contained in the aqueous stream from the first cycle of solvent extraction that is declared to be waste would be classified as HLW whether it has been separated from the aqueous stream in subsequent processes or not. This assumption is reflected in the rightmost column of Table 19.

a. Volatiles in Waste

Although waste forms for tritium, $^{14}CO_2$ and ^{85}Kr are shown here, these radionuclides have not been sequestered previously because no standards have been in place specifying their type of retention. Consequently, these waste forms are the author's judgment of what might constitute credible waste forms.

Because ^{129}I concentrates in the thyroid gland where, in sufficient amount, it may cause serious damage, especially in children, its sequestration has been required from the beginning of reprocessing. Care is required to ensure its complete release into the off-gas during spent fuel dissolution [CEA, 2007]. It is an especially troublesome radionuclide to dispose of as waste because it has few highly stable chemical compounds. Fixation of the silver zeolite sorbent containing the iodine was chosen in the present study because the system is inorganic and therefore less subject to radiation damage than organic materials, AgI is insoluble under most conditions likely to be found in the environment, and AgI is stable to relatively high temperatures (It decomposes at its melting point of 552 °C.). Because it is a halogen it is corrosive in the elemental form.

The following information elaborates on issues related to the classification of waste forms containing volatile radionuclides:

- Tritium: Tritium is recovered by voloxidation before encountering the first aqueous solutions in the reprocessing plant. It is assumed to be diluted by only the very small

amounts of ^{1}H and deuterium produced by nuclear reactions in the fuel matrix. The possibility of dilution by water in air used to oxidize the fuel in the voloxidation step was not taken into account because the amount of humidity and air are design-specific. These assumptions lead to a very high tritium concentration in a very small volume of waste.

- Carbon-14: Dilution with stable carbon isotopes in the fuel matrix and some natural carbon in the plant off-gas was taken into account, but the very small volume of the waste results in ^{14}C concentrations exceeding Class C limits.

- Krypton-85: Krypton-85 is not listed in the tables in 10 CFR Part 61 so it is Class A by definition. Such classification deserves further evaluation because the half life of ^{85}Kr is similar to that of tritium, but ^{85}Kr is more difficult to stabilize and has significant penetrating radiation.

- Iodine-129: Again, the relatively small volume of the waste leads to a high concentration of iodine in the waste form and classification as GTCC.

b. Cladding, Technetium, and Dissolver Solids

The cladding and Tc wastes may also contain the so-called noble metals Pt, Pd, Rh, Ru and Mo that constitute the dissolver solids. These noble metals may or may not be combined with the cladding hulls. If they are not removed from the dissolver with the cladding hulls then they will be left in the dissolver and may be carried into the UREX process step. Together they present a potential problem in that, being solids, they may cause hot spots in the dissolver and subsequently in the centrifuge used to clarify the feed to the solvent extraction equipment. If they get beyond the feed clarification step they may cause problems in the centrifugal solvent extraction contactors. A particular problem is potential blocking of the organic overflow weirs. The dissolver solids problem is further exacerbated by the fact that small amounts of solids have been observed to continue precipitating from the dissolver solution for up to two weeks as noted in Section VI.A.1.b.i (however, see footnote 23.). Further, if carried into the UREX process step the solids would add to the radiation damage to the solvent. The amount that slowly precipitates was observed by ORNL investigators to be as much as 10 % of the amount that remains initially undissolved in the dissolver.

The cladding waste, which is assumed to contain most of the ^{99}Tc and the dissolver solids (which contain a significant fraction of ^{129}I), exceeds the Class C limit by a factor of 220 and is classified as GTCC. The primary contributors to exceeding the Class C limit are TRU elements and ^{99}Tc, both of which exceed the Class C limit by about a factor of 100. ^{94}Nb exceeds Class C limits by about a factor of 10. ^{59}Ni and ^{14}C are close to the Class C limit (0.5 and 0.3, respectively), and might exceed the limit for very high burnup fuels.

c. Uranium Product

The uranium may go any of several different disposition paths. DOE's plans call for beneficial

use of the uranium by being combined with the actinide stream for use in the burner reactor or being re-enriched to produce LWR fuel. Some portion of the uranium may not find a beneficial use in which case it would be converted to an oxide and managed as a waste much like DOE's current approach to disposition of enrichment plant tails.

It should be noted that recycled uranium is not as benign as natural uranium for two reasons. First, no separation process is perfect and the uranium will contain trace amounts of radionuclides such as ^{99}Tc and ^{237}Np. These radionuclides can become concentrated in enrichment facilities and have been troublesome in the gaseous diffusion plants because they tend to deposit on internal surfaces. Such deposits can complicate maintenance activities to the point that gaseous diffusion plant operators have been reluctant to contaminate their plants with recycle uranium or have dedicated certain plants to recycle uranium enrichment. The current trend away from gaseous diffusion and toward gas centrifuge enrichment makes it much more economic to dedicate part of the plant to recycle uranium.

The second difference between natural and recycle uranium is that the latter contains ^{236}U and ^{232}U. The former is an undesirable neutron poison that detracts from the value of the recycle uranium. The latter is present in very small quantities (typically around 1 ppb) but it has a relatively short half-life (72y) and one of its decay products emits a very energetic gamma ray which leads to higher occupational dose rates during fabrication than those from natural uranium.

Based on the assumptions in Appendix F, the uranium product from reprocessing would be Class A if it were declared to be waste. The major contributor to this (about 5% of Class C limits) is the trace amount of transuranic elements assumed to accompany the uranium. It is important to note that the assumption used in this paper is that the TRU elements are removed from recycle uranium to the point that it just meets applicable specifications for recycle. It is likely that the concentration of TRU elements could be further reduced if required.

d. TRU Product

The TRU product stream from the TALSPEAK process is destined for transmutation. It produces about two-thirds as much heat as the Cs/Sr waste stream per MTIHM based on 25-year-old SNF and, as a consequence, requires packaging and storage in a way permitting cooling. Additionally, the alpha activity of this material is sufficiently concentrated so that significant upstream (counter to ventilation air currents inside the facility) mobility of the actinides from alpha recoil can be expected and will need to be considered when designing the off-gas system.

Under the assumption that materials separated from the aqueous raffinate from the first solvent extraction cycle are HLW, if the TRU product were declared to be waste it would be HLW and, by concentrating the most toxic actinides into a small volume, would exceed Class C limits by a large factor.

e. Cs/Sr Waste

^{137}Cs is a difficult fission product to manage. The radioactivity of its short-lived ^{137m}Ba daughter produces an energetic gamma ray and considerable concomitant heat. Consequently, packaging, storing, shielding and cooling will be significant problems for many decades. In addition, ^{135}Cs which has a long half-life (2.3E+06 yrs) is present in masses comparable to that of ^{137}Cs after 25 years of decay so the cesium waste package will require indefinitely long confinement.

The foregoing comment on heat production holds for ^{90}Sr although its radiation is softer, and there is no other long-lived Sr radionuclide present. The ^{90}Y daughter is quickly in secular equilibrium, and decays with a very short half-life to stable ^{90}Zr. Consequently, there may be merit to adding an additional step to separate the Sr from the Cs to reduce the volume of waste held in long-term disposal although the UREX flowsheets do not do so.

Under the assumption that materials separated from the aqueous raffinate from the first solvent extraction cycle are HLW, the Cs/Sr waste would be HLW unless DOE goes through the process to determine that it is not HLW. If the Cs/Sr were determined to not be HLW then they would be GTCC waste because the concentrations of ^{90}Sr and ^{137}Cs initially exceed Class C limits by a large factor. Current DOE plans call for this waste to be stored in some type of monitored near-surface engineered storage facility until it decays to Class C levels or lower at which time the facility would be deemed to be a disposal facility. The combined ^{90}Sr and ^{137}Cs would decay to Class C limits in about 320 years. This disposal approach raises the issue of when the Cs/Sr waste would be classified: when it is produced at the reprocessing plant or after the extended storage period when the storage facility is converted to a disposal facility.

There is no limit for ^{135}Cs in 10 CFR Part 61 and establishing such a limit might change its classification. However, the draft environmental impact statement for 10 CFR part 61 [NRC, 1981] stated a limit of 84 mCi/L for ^{135}Cs which is significantly larger than its concentration of 18 mCi/L in SNF. An additional complication with the Cs/Sr waste is that cesium isotopes decay to stable barium which would make the waste a mixed RCRA waste on the basis of the toxicity characteristic of barium unless the waste form can be shown to release sufficiently small amounts on barium in standard leach tests.

f. Fission Product Waste

The fission product waste, which in the present discussion does not include the gaseous and volatile fission products or the Cs/Sr fission product waste, is destined for vitrification in borosilicate glass and eventual disposal in a geologic repository. The ultimate mass of fission product waste would be that listed in Table 19 plus the mass of the TRU product that will be fissioned in a transmutation reactor plus perhaps a few percent of the uranium mass if the uranium were to be re-enriched to produce LWR fuel.

The fission product waste is classified as HLW. It exceeds Class C limits by a factor of 270 which is a much smaller factor than for the TRU product or Cs/Sr waste and is comparable to the cladding plus technetium waste. The residual TRU in this waste is the cause of exceeding the Class C limits.

g. Spent Nuclear Fuel Comparison

To provide some context for the foregoing discussion the characteristics of the PWR SNF that produced the foregoing wastes has been included. The following should be noted:

- The parameters in the left portion of the table (mass, radioactivity, and thermal power) are conserved so the values for the SNF are just the sum of the various wastes and products with minor differences from rounding. As a result of the intense radioactivity and thermal power of the TRU product (Am and Cm in particular) and Cs/Sr waste from UREX, the waste destined for disposal in a deep geologic repository (cladding and fission product waste) are reduced to 18% and 30% of the amount in SNF. This reduction would not occur for a Purex process where the Cs/Sr, Am, and Cm remain with the waste destined for deep geologic disposal.

- Assuming the uranium is reused, the waste volume from UREX+1a would be reduced by about 79% as compared to SNF if the relatively voluminous ^{85}Kr is excluded and by 59% if it is included. To the extent that uranium is not reused the volume of reprocessing wastes would be increased and in the limiting case the total waste volume would be increased by about 8% as compared to SNF. In the case of a conventional Purex process, the volume of waste destined deep geologic repository disposal (~450 L/MTHM [Vernaz, 2006]) is about the same as the volume of the parent SNF fuel (403 L/MTHM) per se and less than the volume of a SNF assembly in a canister (635 L/MTHM). This has been accomplished through careful management of facility operations, use of chemicals that can be degraded to water, nitrogen, and carbon dioxide, and the use of compactors and incinerators. However, to the extent that the uranium product is declared to be waste (up to 272 L/MTHM) or LLW destined for near-surface disposal (~200 L/MTHM) to the point that the total waste volume ranges from 1.45 to 2.3 times that of the SNF depending on which SNF comparison basis is selected.

- The SNF assembly is about 46,000 times Class C limits. This factor is much less than the factor for the TRU product which is a reflection of concentrating the most hazardous 10 CFR Part 61 species in the relatively small volume of the TRU product.

4. Potentially Toxic and Reactive Materials

In general the non-radiological hazards involved in spent nuclear fuel recycle will be regulated by OSHA. The solvents used in the four UREX +1a process steps are commercially available organic compounds and as such require the same handling procedures in a reprocessing plant as are required for safely handling these somewhat toxic chemicals in industrial operations. In ordinary chemical process use none is extraordinarily toxic or reactive, although all pose some danger to those who handle them. Other chemicals such as those used in solvent cleanup are inorganic compounds, and safe industrial practice should be observed. In cases where solvents such as halogenated compounds are used the toxic halogens may be released by radiolytic decomposition. Thus, although the compounds may be relatively benign in ordinary use, they can become toxic in radiation environments. Nitric acid in a variety of concentrations is used throughout the process steps and because of its amounts and ubiquity it is probably the most

significant toxic chemical. There is a significant potential chemical hazard in the form of "red oil" which is discussed below.

a. Red Oil Explosions

Red oil is a substance formed when an organic extractant (in the first step of UREX the organic extractant is TBP) comes in contact with concentrated nitric acid (> 10 M) at a temperature above 120 °C. Contributory chemicals can include diluents (e.g, hydrocarbons used to dilute TBP) and/or aqueous phase metal nitrates. Red oil can decompose explosively when its temperature is raised above 130°C. Three red oil explosions have occurred in the United States: one at the Hanford Site in 1953, and two at the Savannah River Site (SRS) in 1953 and 1975. A red oil explosion also occurred in 1993 at the Tomsk-7 site at Seversk, Russia and in an evaporator in Canada. Equipment capable of producing red oil are evaporators and denitrators.

Controls for prevention or mitigation of a red oil explosion are generally temperature, pressure, mass, agitation of tank contents, and reactant concentrations. Maintaining a temperature of less than 60 °C is generally accepted as a means to prevent red oil explosions. Vessel venting serves to keep pressure from destroying the process vessel in the case of an explosion, while also providing the means for evaporative cooling to keep red oil from reaching the runaway temperature. Mass controls utilize decanters, hydrocyclones, and steam stripping to remove organics from feed streams entering process equipment capable of producing red oil. Limiting the total available TBP is another mass control that mitigates the consequence of a red oil explosion by limiting its maximum available explosive energy. Washing the aqueous Pu and U products with diluent to remove entrained TBP is effective in preventing red oil explosions during evaporation of these products. Finally, concentration control can be utilized to keep the nitric acid below 10 molar. A U.S. government study [DNFSB, 2003] concluded that none of the above controls should be used alone; rather, they should be used together to provide effective defense in depth for prevention of a red oil explosion. The operator of French reprocessing plants (AREVA) recently stated [ACNW&M , 2007] that red oil has not been observed in their plants.

At present there is no information about the likelihood of forming red oil in UREX processes, although the first step that uses conventional TBP extraction may be expected to pose the same red oil risks as have been observed in the past.

b. Ion Exchange Resin Explosions

There have been nine documented incidents of fire, explosion, and/or vessel rupture in anion exchange vessels at the Savannah River Site that have been characterized as "resin explosions" [DNFSB, 2001]. They have occurred under various conditions of temperature and nitric acid concentration. All of the systems involved were exchanging ions containing either plutonium, neptunium, curium, or uranium.

Conditions identified as contributing to a possible resin explosion are listed below:

- exposure of resin to greater than 9 molar nitric acid

- exposure of resin to high temperature
- allowing resin to dry
- exposure of resin to strong oxidants other than nitric acid, such as permanganate or chromate ions
- exposure of resin to high radiation doses
- allowing resin to remain in a stagnant, non-flow condition while loaded with exchanged metal and/or in contact with process concentrations of nitric acid
- exposure of resin to strong reducing agents, such as hydrazine
- exposure of resin to catalytic metals such as iron, copper, or chromium

By avoiding the above conditions it was possible to prevent further explosions, but great care must be taken to prevent these explosions in the future, especially if separations involving concentrated Am/Cm are attempted.

B. Pyroprocessing

Pyroprocessing is a generic term for high-temperature reprocessing using pyrometallurgical processes. There are many manifestations of pyroprocessing in the nuclear industry [NEA, 2004], several of which are directed at spent fuel recycle. The DOE's current plans call for pyroprocessing to be used to reprocessing the actinide product from UREX+1a after it had been fabricated into metallic or possibly nitrite fuel elements and irradiated in a fast-spectrum transmutation reactor.

Pyroprocesses are often carried out in fused salt systems in conjunction with electrometallurgical steps that remove uranium, plutonium, and other elements from the fused salt by electrolytic reduction onto a cathode. This leaves the fission products in the fused salt or in a molten cadmium pool, and is DOE's currently planned pyroprocessing approach. Pyroprocess steps for separating the Cs/Sr are not yet evident.

Pyroprocesses are not currently in significant use worldwide, but a great deal of research and development has been carried out on them. Electrometallurgical spent fuel reprocessing has been studied and developed extensively at Argonne National Laboratory (ANL) for many years, and a fairly large-scale demonstration was carried out at DOE's Idaho Falls facility using Experimental Breeder Reactor (EBR-II) spent fuel.

The principles behind the electrometallurgical process are well understood, and no apparent insurmountable technical barriers exist to their wider adoption [NAS, 2000]. An important obstacle to widespread adoption of pyroprocessing is that reprocessing is currently being carried out worldwide using aqueous processes and a very large experience base exists in large, well-established PUREX process plants. Consequently, there has been little demand for pyrometallurgical or other systems.

The feed to pyroprocessing was originally intended to be metallic spent fuel, and the process lends itself best to reprocessing this type of fuel. It is possible , however, to reprocess oxide fuels by first converting them to metal through a head end step that reduces the oxide to metal. This reduction is best accomplished using finely divided oxide, which can be prepared using voloxidation (see Sect. VI.A.2.a) to pulverize the oxide fuel. Process modifications are possible that separate uranium, plutonium and other actinides from the remainder of the radionuclides. Figures 20 and 21 are representations of two versions of the ANL pyroprocess. Note that in Figure 20 the cathodic product is uranium, whereas in Figure 21 the product is uranium plus the bulk of the actinides. Alterations in the details of operation of the system provide the capabilities to tailor the product streams to the desired compositions, including essentially pure plutonium [Wymer, 1992].

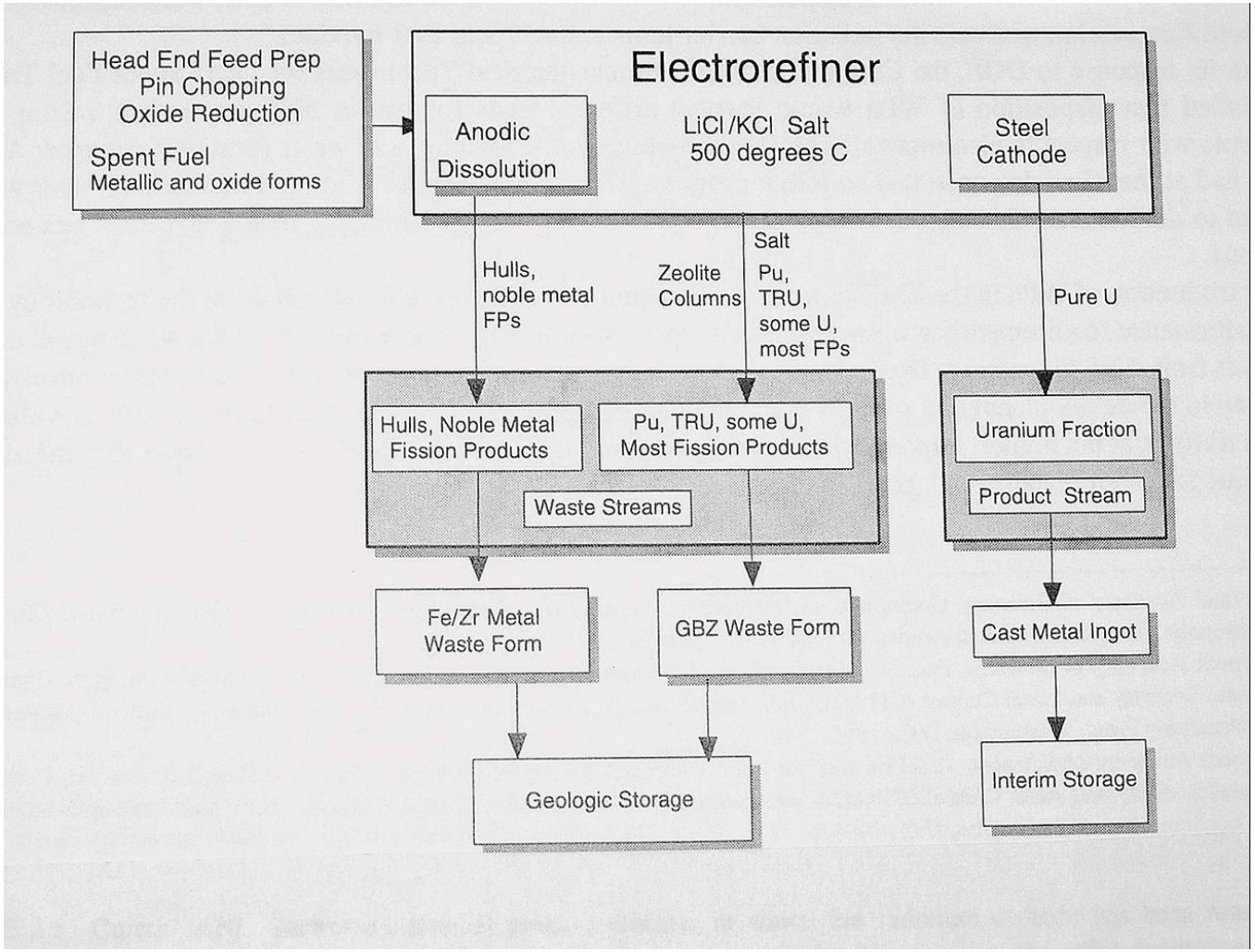

Fig. 20 Schematic diagram of pyroprocessing with uranium recovery

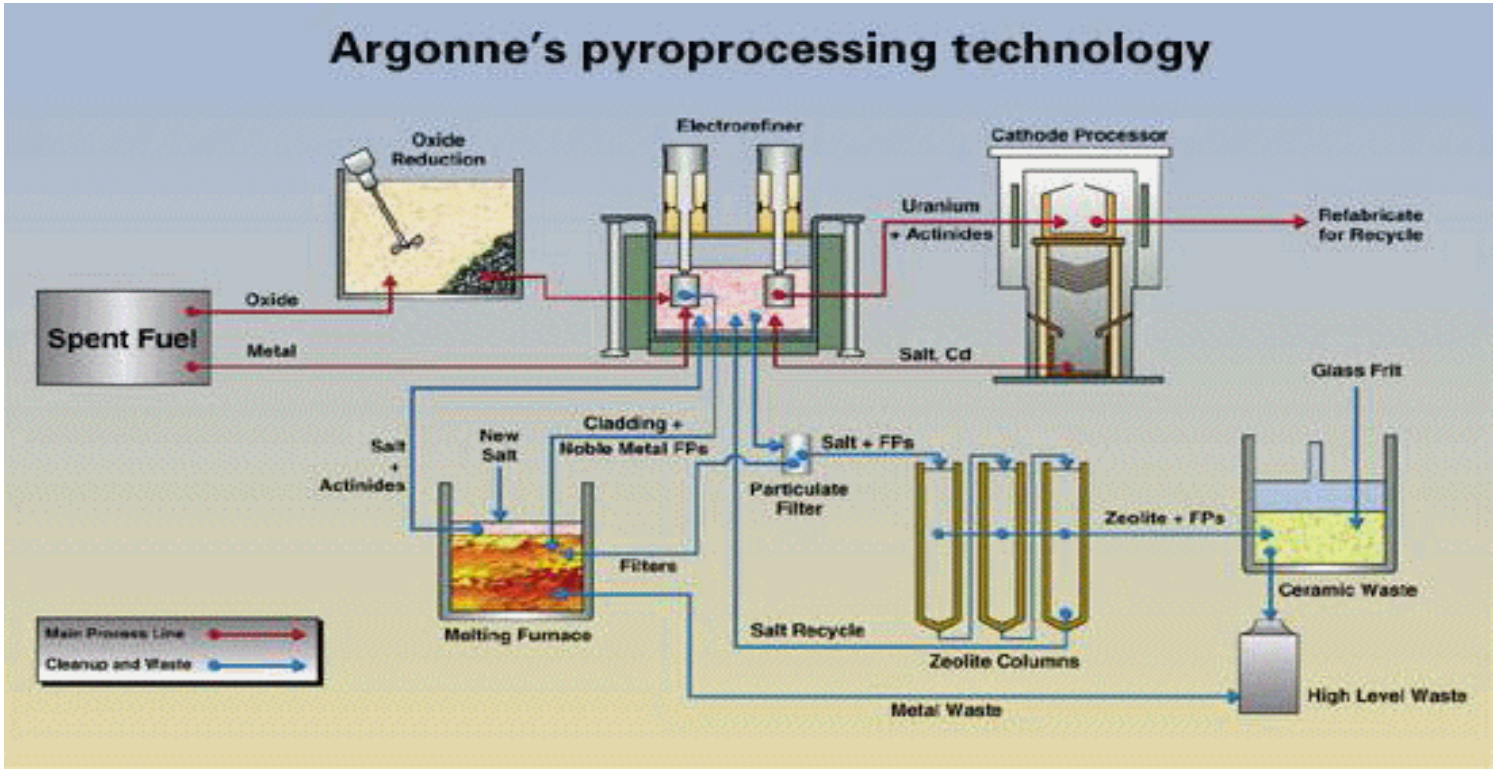

Fig. 21 Pictorial representation of pyroprocessing operations

Pyroprocessing bears no resemblance to the more conventional aqueous processes such as PUREX. Pyroprocessing is inherently a batch process. The size of the batches is limited by the nature of the electrorefiner, although it is possible to incorporate more than one electrorefiner in a single high-temperature unit and thus increase the throughput of the system. However, in general, multiple electrorefiners would be required for commercial-scale reprocessing. After repeated batch processes the salt accumulates impurities and must be discarded.

There are two major waste streams from this process: 1) the cladding hulls and the noble metal fission products that accumulate in the electrorefiner, and 2) small amounts of residual TRU elements and fission products. The cladding hulls are a relatively low activity solid waste. The noble metal fission products occur mostly as a metallic sludge, and could present a number of problems, both from the point of view of handling them and because they could cause electrical short-circuiting problems. The residual TRU elements and fission products are sorbed on a glass-bonded zeolite (GBZ).

C. Reprocessing HTGR Fuels

High-Temperature Gas-Cooled Reactor (HTGR) fuels are distinctly different from other reactor fuels. This difference imposes a very different type of head-end processing. Unlike most other reactors, the HTGR fuel is not a ceramic oxide fuel clad in metal tubing. HTGR fuel is made mostly of graphite, and is in one of two geometric configurations, the spherical (pebble) form, and the prismatic form mentioned above, both of which are unlike any other reactor fuels. (See the discussion of the composition of HTGR fuels in Sect. II.B.4) There has been no commercial reprocessing of HTGR fuels, although development work has been conducted at Oak Ridge National Laboratory and elsewhere. Some of the salient features of HTGR fuel reprocessing are discussed below.

1. Flowsheets

The first step in reprocessing HTGR fuels is removal of the bulk of the graphite, whether it is in the form of balls or prismatic blocks [DeCul, 2002]. Several removal approaches have been considered. The balls would be crushed or burned to release the TRISO particles, which contain the fuel material of interest. The crushed material would be sieved to recover the fuel particles and the inert graphite would become a waste stream. The separated fuel particle would then be put through a grinder to break the TRISO coatings and release the tiny fuel kernels that contain the uranium and actinides and fission products. Finally, the crushed fuel material and any residual graphite would be dissolved in nitric acid preparatory to solvent extraction. Alternatively, the residual graphite could be burned either before or after crushing the fuel. The advantage to early removal of the graphite by crushing or burning is that it would remove the bulk of the graphite before dissolution in nitric acid. Nitric acid dissolution of finely ground graphite and carbides produces organic compounds that could interfere with the solvent extraction separation step, which is the next step in reprocessing. In any case the fragments of the silicon carbide inner coating would need to be removed before the solvent extraction step because their presence could interfere with the operation of the solvent extraction equipment, especially if centrifugal contactors were used.

For the prismatic fuel blocks it is desirable to separate the coated microspheres from the bulk of the graphite block as a first head-end step. This might be done by burning as described above or reaming the carbonized fuel sticks out of the blocks. In this way the bulk of the graphite could be physically removed, leaving the coated microspheres for treatment as outlined above for the fuel balls. The de-fueled prismatic blocks could then be disposed of in the same way as is done for managing graphite from reactors [IAEA, 2006], [Wickham, 1999] , i.e., by:

(I) permanent removal from the "environment" as solid graphite;

(ii) destruction, e.g. incineration; and,

(iii) re-cycling.

2. Unusual Plant Features

The head-end of the HTGR spent fuel reprocessing plant would have unique features arising from the necessity to crush, grind, or burn the graphite fuels. These steps are to be contrasted with the relatively much simpler fuel shearing employed with LWR fuels. After these head-end steps, the remainder of the plant would be essentially conventional solvent extraction using some version of PUREX, assuming that interference from organic compounds formed by reaction of nitric acid with graphite could be kept acceptably low.

3. Reprocessing Wastes

The bulk of the graphite would become a moderately radioactive waste. The radioactivity would be due primarily to failed fuel particles that could release small amounts of radionuclides into the pebbles or the prismatic blocks but it would also contain amounts of ^{14}C that are large compared to what is in the fuel matrix. In the case where the graphite is burned there would be a CO_2 gaseous waste. Volatile radionuclides would be trapped in the off-gas filters or subsequent trapping systems. The number and types of wastes from the separations processes would depend on the processes chosen, and on whether the fuel was based on the uranium-plutonium or the uranium-thorium fuel cycle. However, if the present UREX+1a flowsheet were used the wastes should be similar to those from processing LWR fuels with the exception of (a) producing much more ^{14}C in the form of CO_2 or a solid ^{14}C waste form and (b) generating a waste stream of SiC hulls in lieu of metal hardware.

D. French Proposals

1. GANEX

The French have been especially active in pursuing a variety of proliferation resistant reprocessing methods [Boullis, 2006] other than PUREX. The CEA has developed the GANEX process (Grouped Actinide Extraction). It is designed to reduce the radiotoxicity and heat output of final wastes. It is envisaged for possible adoption at the La Hague plant in about 2040 [Cazalet, 2006]. It should be noted that the GANEX process makes no attempt to separate anything but the actinides and lanthanides as a group from most of the uranium and then from each other. Cesium and strontium remain with the fission products.

In the GANEX process, shown very simplified form in Figure 22 [Bouchard, 2005] below, uranium is separated in a preliminary step and the raffinate then undergoes three subsequent extractions which result in an actinide stream which is combined with the uranium product from the first step. The lanthanides and other fission products, including cesium, strontium and technetium, are formed into borosilicate glass for storage and deep geologic disposal.

The GANEX process has the disadvantage of leaving the high heat emitters cesium and strontium with the other fission products in the vitrified waste glass destined for disposal. It is a modest extension of the Purex process which could likely be implemented with little or no additional research and development concerning the central processes. However, significant additional development of waste processing and treatment technologies would likely be needed to meet U.S. requirements.

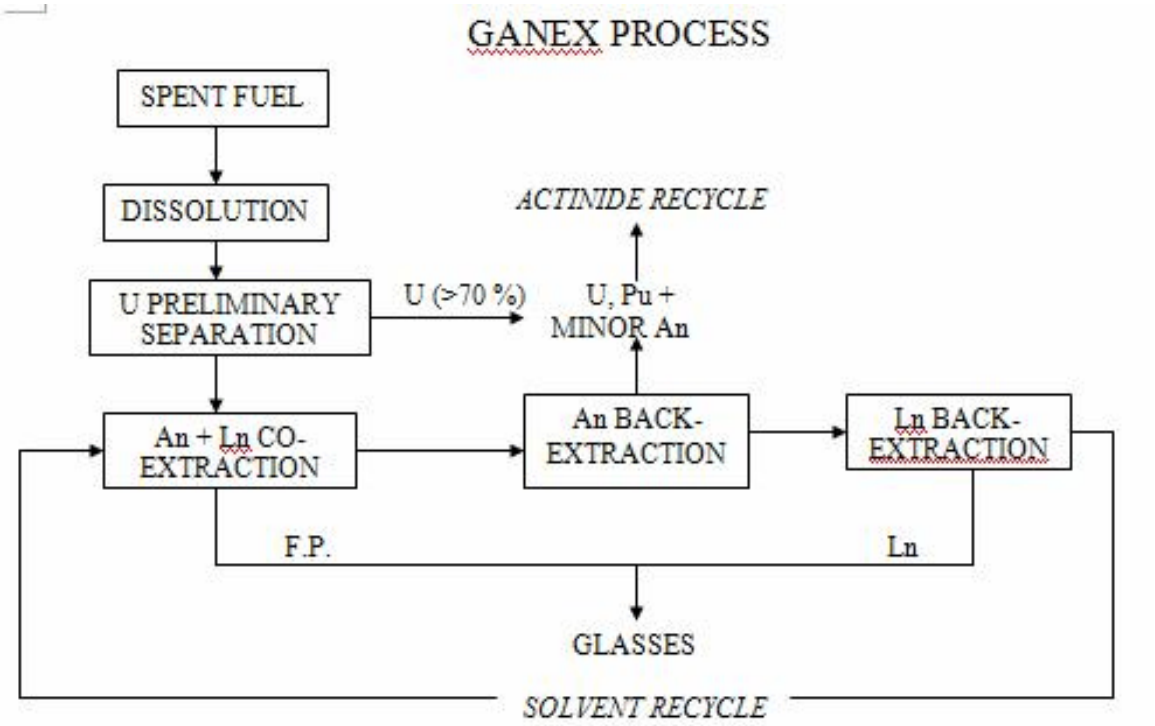

Fig. 22 The French Ganex Process

2. COEX™

The COEX™ process, which was developed by AREVA, is divided into three main phases shown in Fig. 23 and described as follows:

- Extraction cycles for separating and purifying a U-Pu mixture without ever isolating pure plutonium
  - SNF is dissolved in nitric acid. The dissolver solution is contacted with TBP extractant in an organic diluent to recover the uranium and plutonium while the fission products and minor actinides remain in the nitric acid solution. The fission products and minor actinides are concentrated by evaporation and then vitrified. The extractant still contains some residual fission products and minor actinides in addition to the uranium and plutonium. The minor actinides are separated from the uranium-plutonium mixture using a nitric acid washing process.
  - The uranium and plutonium are separated into two streams: a uranium U stream and a mixed uranium-plutonium.
  - The uranium-plutonium mixture is purified by another solvent extraction cycle extraction.

- The uranium-plutonium solution is converted to $(U,Pu)O_2$ by first adding a quantity of uranium to adjust the solution to the required concentration. The U-Pu solution is brought into contact with oxalic acid which simultaneously precipitates the U-Pu as the oxalate. The precipitate obtained is then filtered, dried and calcinated to form a homogeneous U-Pu oxide powder.

- Fresh MOX fuel is manufactured using fabrication using a powder metallurgy process as described in Sect. VII.

The COEX™ process is a modest extension of the Purex process which could likely be implemented with little or no additional research and development concerning the central processes. However, significant additional development of waste processing and treatment technologies would likely be needed for COEX™ or other reprocessing flowsheets to meet U.S. requirements.

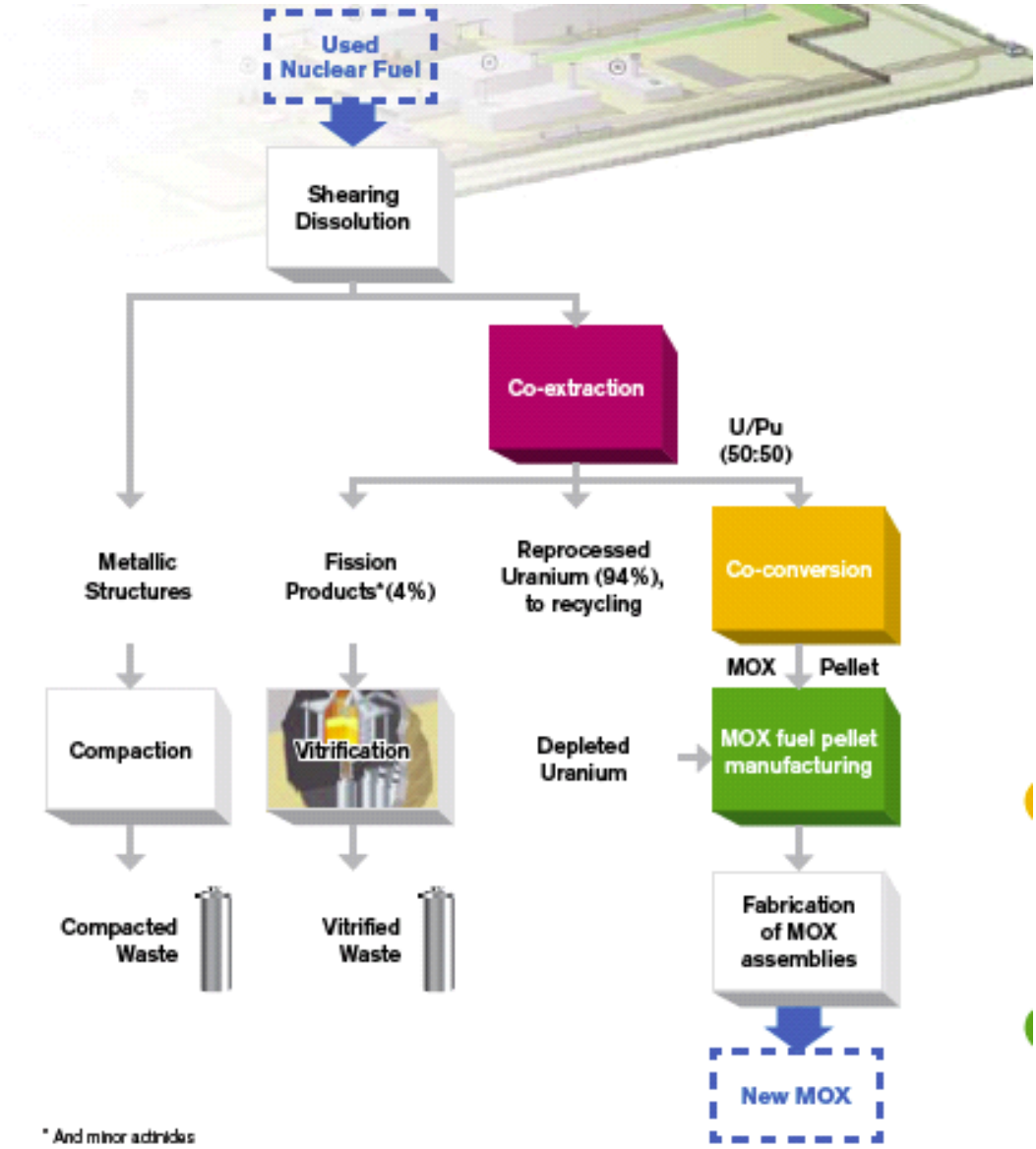

Fig. 23 The French COEX™ Process

E. General Electric's Pyroprocess

General Electric (GE) [Loewen, 2007] has proposed a path to deploy the GNEP CFTC based on ANL's pyrometallurgical process that GE claims has had extensive testing not only in the U.S., but also in Russia, Japan and South Korea. The proposed process is based on a modular concept that would be sized to support an fast transmutation reactor for actinide burning. It is claimed to be proliferation resistant and to have a low environmental impact. The process would be operated either batchwise or continuously.

Although the pyrometallurgical process is best suited to spent metallic fuels, as noted above, it could be adapted to oxide fuels through use of cathodic or carbon reduction of the oxide in a molten LiCl at 650° C to produce metal. The oxygen or CO_2 would be released. This reduction has been demonstrated at ANL at a kilogram scale.

It is planned to demonstration the electro-reduction at GE's Wilmington, SC plant using the current SNM license and then to license a site using lessons learned at the Wilmington plant.

VII. ADVANCED FUEL REFABRICATION

Current preparation of conventional pelletized reactor fuels for LWRs and fast reactors (see Sect. III.B) requires grinding to achieve specified size and shape. This process produces finely divided fuel particles that must be recovered and recycled. A "dust-free" sol-gel microsphere pelletization process has been developed for fabrication of $(U,Pu)O_2$, (U,Pu)C and (U,Pu)N fuel pellets containing around 15% plutonium [Ganguly, 1997]. The microspheres can be pressed into pellets that can be sintered to 85% of theoretical density in Ar+8% H_2 at 1700°C. The sintered oxide, monocarbide and mononitride pellets have an open pore microstructure with fine grain size.

Hydrated gel-microspheres of UO_3/PuO_2 and $UO_3/PuO_2/C$ are prepared from nitrate solutions of uranium and plutonium by the "ammonia internal gelation" process, using hexamethylene tetramine that decomposes to ammonia in the presence of silicone oil at 90±1°C in a gelation bath. For oxide fuel pellets, the hydrated UO_3/PuO_2 gel-microspheres are calcined at around 700°C in Ar/8% H_2 atmosphere to produce "non-porous", "free-flowing" and coarse (around 400 micron) microspheres which are directly pelletized at 550 MPa to green pellets. The mixed oxide pellets are subjected either to low temperature (~1100°C) oxidative sintering in N_2/air containing ~1500 ppm O_2 or to high temperature (~1650°C) sintering in Ar/8% H_2.

For monocarbide and mononitride pellets, hydrated gel-microspheres of $UO_3/PuO_2/C$ were subjected to carbothermic synthesis in vacuum (~1 Pa) and flowing nitrogen (flow rate: 1.2 m^3/h) in the temperature range of 1450–1550°C. The microspheres retain their individual identity in the sintered pellets because during sintering densification takes place mainly within and not between the microspheres.

Metallic fuels of U/Pu/Zr continue to be of considerable international interest because of their very promising performance at high fuel burnup in fast reactors.

VIII. REGULATION AND LICENSING OF FUEL RECYCLE FACILITIES

A. Licensing – An historical perspective

Application of NRC's regulatory process to commercial recycle facilities will not be simple. Deficiencies in regulations are known to exist that will require new rule making or many exemptions before a license can be approved, for example for reprocessing spent nuclear fuel at a commercial site. The body of regulations that currently establishes NRC's licensing and regulatory process for recycle facilities, associated waste streams, and effluents include at least the following requirements in Title 10 of the Code of Federal Regulations:

Licensing Process – Part 50/52 and Part 70
Radiation Protection – Part 20
Environmental Protection – Part 51
Reprocessing – Part 50
Fuel Fabrication – Part 70
HLW Vitrification and Storage – Part 70
Uranium product conversion – Part 40
Plutonium product conversion – Part 70
Reprocessed Uranium Storage – Part 70
Low-Level Waste Disposal – Part 61
Disposal of HLW at Yucca Mountain – Part 63
Spent Nuclear Fuel Storage – Part 72
Cs/Sr and TRU Storage – Part 30 and Part 70
Transportation – Part 71
Physical Protection – Part 73
Material Control and Accountability – Part 74
Decommissioning – Part 50 and Part 51

This chapter focuses on SNF reprocessing because there has been significant experience with licensing fuel fabrication plants. However, only limited regulatory experience exists concerning licensing and regulating reprocessing facilities. Most of this experience occurred decades ago under the AEC and the then newly formed NRC.

1. Licensing experience at Nuclear Fuel Services

In 1966 the U.S. Atomic Energy Commission (AEC) used Part 50 to license Nuclear Fuel Services (NFS) reprocessing facility at West Valley. From 1966 to 1972 NFS reprocessed 640

metric tons of fuel, but in1972 the facility shut down to implement a number of improvements and never restarted. Since that time no other licenses were approved by the NRC for reprocessing spent nuclear fuel, although the BNFP had been undergoing a licensing review when President Carter terminated commercial reprocessing. Although some 30 years have passed since then, 10 CFR Part 50 still remains the default licensing basis for reprocessing spent nuclear fuel. Many changes have occurred to Part 50 over that time frame, but most relate to licensing utilization or power reactor facilities as opposed to reprocessing facilities like NFS.

2. Licensing experience at Barnwell

The Preliminary Safety Analysis Report for the BNFP Separations Facility was submitted on November 6, 1968. Following appearances before the Advisory Committee on Reactor Safeguards and a public hearing before an Atomic Safety and Licensing Board, a Construction Permit was issued on December 18, 1970. Subsequently, several substantial documents were submitted to the AEC, including: Environmental Report and Facility Safety Evaluation for the Uranium Hexaflouride Facility; Updated Environmental Report for the Separations Facility; Final Safety Analysis Report for the Separations Facility (five volumes and several addenda); Technical Description in Support of Application for FRSS Operation; Preliminary Safety Analysis Report for Plutonium Product Facility; and Nuclear Materials Safeguards Supplement. In addition, the applicant submitted a large number of documents containing responses to questions by the AEC.

A public hearing was conducted before an Atomic Safety and Licensing Board to comply with the National Environmental Policy Act and preliminary to the issuance of an Operating License. The compliance with applicable regulations and the commitment implicit in issuing the Construction Permit were verified by the AEC who conducted more than 20 formal inspections prior to the cessation of commercial licensing activities (brought about by Presidents Carter and Ford.).

Some facilities and operations of the plant complied with 10 CFR Part 50 regulations, while other facilities such as the plutonium nitrate conversion plant complied with 10 CFR Part 70. In the past, the licensing process was complicated by the evolutionary character of regulations pertaining to reprocessing plants and waste management, and the inter-relation between the licensing of the facility and other regulatory actions taking place concurrently. Notable among those were the proceedings on the Generic Environmental Statement on Mixed Oxide Fuel (GESMO) and the Environmental Statement on the Management of Commercial High-Level and Transuranic Contaminated Radioactive Waste. These latter activities, however, were placed on hold when the International Nuclear Fuel Cycle Evaluation (INFCE) was invoked.

B. Current licensing process and alternatives

Under current regulations, both production (reprocessing) and utilization facilities (power reactors) must comply with 10 CFR Part 50 to obtain a construction or operating license. To ensure adequate protection of public health and safety, Part 50 requires that applicants demonstrate their designs meet general design criteria, and mitigate a postulated set of accidents known as “design basis” accidents (DBAs) to within certain specified radiological release limits.

Plant-specific probabilistic risk assessment (PRA) insights are used by applicants (but not required under Part 50) to ensure that the plant is protected against a robust set of accidents.

Part 50 was not written specifically for reprocessing spent nuclear fuel, and has some deficiencies for that use. For example, in Classification and Description of Licenses, §50.20, there is no specific acknowledgment of licensing reprocessing plants, and §50.34 (a) *Contents of applications; technical information* is directed solely to reactors. The NEPA process, and required documentation for a reprocessing facility has yet to be completely demonstrated. Earlier efforts in this regard for commercial reprocessing plants were subsequent to the submission of the safety analysis report and thus were very time consuming and contentious. As written today, modification of Part 50, or exemption to its requirements would be needed to accommodate the technical differences between licensing light-water reactors and reprocessing facilities. Rule modifications could be extensive and public hearings on exemptions are likely to drag the process out.

All fuel fabrication facilities are licensed under 10 CFR Part 70 Subpart H *Additional Requirements for Certain Licensees Authorized to Possess a Critical Mass of Special Nuclear Materials*. Experience and lessons learned from licensing fuel fabrication facilities under Part 70 is to some extent applicable to reprocessing facilities. Part 70 utilizes an integrated safety analysis (ISA), sometimes known as a process hazards analysis, to assess the safety of the design and to identify equipment relied on for safety. Use of ISA is an important step towards risk quantification and expanded use of risk-informed regulations, however, in a January 14, 2002 letter to the Commission, the Joint Subcommittee of the Advisory Committee on Reactor Safeguards and the Advisory Committee on Nuclear Waste noted shortcomings in ISAs that would likely need to be addressed to expand its role in regulatory decisions involving reprocessing facilities. Additionally, measurable limits would need to be established and implemented on emissions from refabrication facilities to ensure public and environmental protection.

At the time of this writing, a new rule (10 CFR Part 53, Risk-Informed, Performance-Based Framework) is under development. Part 53 is expected to provide a risk-informed, performance based framework for licensing the next generation of nuclear reactor designs. The framework integrates safety, security, and emergency preparedness to establish a comprehensive set of requirements as a license condition. The approach focuses on the most risk-significant aspects of plant operations, and uses the Commission's safety goals (separate goals would need to be developed for recycle facilities) as top level regulatory criteria that designers must meet to ensure adequate safety. The approach eliminates the need for exemptions by implementing guidance to accommodate technological differences between designs. Such an approach to licensing reprocess facilities may be advantageous because of its flexibility. Part 53, however, is primarily intended for new commercial power reactors and its current schedule may not support its application to reprocessing facilities.

In addition to the modification of existing regulations, a new rule could be designed specifically for licensing recycle facilities. The rule would avoid the need to write exemptions for rules already in place, and place all the regulations relevant to the recycle facilities under one part of the regulations, effectively leaving other parts of the regulations unchanged. The rule could be made to expedite the licensing processing by eliminating exemptions and long drawn-out hearings. The drawback is that extensive resources and time are likely to be required to develop

such a rule although it is unclear whether the requirements are significantly greater than other approaches.

It is expected that implementation of any new or modified rule would be consistent with Commission policies including the Commission's Probabilistic Risk Assessment (PRA) Policy Statement [NRC, 1995]. This Policy Statement states in part: "The use of PRA technology should be increased in all regulatory matters to the extent supported by the state of the art in PRA methods and data, and in a matter that complements the NRC's deterministic approach and supports the NRC's traditional defense-in-depth philosophy." The Committee has gone on record repeatedly in letters to the NRC Commission about the use of risk-informed decision making, starting in October of 1997 and most recently in a May 2, 2006 letter. These letters are listed in Appendix C. Additionally, ALARA requirements for reprocessing facilities that establish design objectives and limiting conditions for radioactive material effluents, analogous to the current Appendix I for LWRs will need to be formulated.

C. Environmental Protection

Production and utilization facilities need to comply with environmental protection regulations. Protection is provided by both (1) designed-in barriers that block the release of radioactive material to the environment, and (2) operational performance and characteristics that limit the release of radioactive material to the environment.

1. Design Perspective

Prior to facility construction,10 CFR Part 51*, Environmental Protection Regulations for Domestic Licensing and Related Regulatory Functions,* requires that each applicant submit an environmental report that complies with Table S-3 §51.51(b), Table of Uranium Fuel Cycle Environmental Data, as the basis for evaluating the contribution of its activity to the environment. Currently, Table S-3 only considers two fuel cycles, uranium-only recycle and no recycle. To accommodate recycle of plutonium and other actinides, the applicability of Table S-3 and S-4, "Environmental Impact of Transportation of Fuel and Waste to and From One Light-Water-Cooled Nuclear Power Reactor," at §51.52(c) would need to be considered to determine if it encompasses the releases of radioactive waste to the environment. This would include information on the impact of fuel recycle affecting other environmental considerations listed in Table S-3 beyond the release of radioactivity, e.g., land (temporarily committed), occupational exposure, water discharges. Table S-4 would also need to be reconsidered to determine if it encompasses the environmental impact of transportation of fuel and radioactive waste, taking into consideration the changes introduced by the recycling of spent nuclear fuel.

An applicant for a fuel recycling facility would need to provide an environmental report with the information required by 10 CFR 51.45. The applicant would need to develop and provide information on the other stages of the fuel cycle analogous to the information in Tables S-3 and S-4, which are applicable to LWRs. Establishing a new set of tables analogous to S-3 or S-4 explicitly for reprocessing facilities may be the best approach should reprocessing become a mainstream activity. 10 CFR 51.45(d) requires that an "Environmental Report" be prepared that includes a discussion of the status of compliance with the applicable environmental quality

standards and other requirements including those imposed by Federal, State, regional and local government agencies.

The EPA Standard (40 CFR Part 190, *Environmental Radiation Protection Standards for Nuclear Power Operations)* places limits on the entire fuel cycle and applicants seeking to design their facility would need to comply. Additionally, this standard does not encompass plutonium or actinide refabrication and reuse in a reactor and it would appear necessary do so.

Following the receipt of the environmental report, it will be necessary to prepare an environmental impact statement (EIS) for siting, construction and operation of the recycle plant(s). This requirement can be very time consuming and contentious and must be started well in advance of planned plant construction. The design of a spent fuel reprocessing plant, for example, is dictated to a large extent by the requirements to (a) protect the plant operators from radiation, to provide a safe working environment, and to prevent criticality and (b) limit routine and accidental releases of radionuclides to the public.

The design must be such that the protection provided by the radiation shielding and confinement of radioactivity keep radiation doses ALARA and are consistent with the allowable limits of personnel dose (Part 20), and air and water contamination (Appendix I to part 50). Exceptions to the dose limits may be made in the case of Planned Special Exposures, but in any case the ALARA principle applies.

2. Operating Perspective

In 1974, the AEC initiated a study to examine the environmental impact from spent nuclear fuel reprocessing and widespread use of mixed-oxide fuel (MOX) fuel as a means to use the uranium and plutonium products of reprocessing. The study, often referred to as GESMO, was published in August 1976 [NRC, 1976]. Five alternatives were considered:

- Prompt fuel reprocessing, prompt uranium recycle, delayed plutonium recycle
- Delayed fuel reprocessing, followed by uranium and plutonium recycle
- Prompt uranium and plutonium recycle
- Uranium recycle; no plutonium recycle
- No uranium or plutonium recycle

Findings from the study found no clear preference for any of the alternatives. Differences in health effects between the fuel cycles did not provide a basis for choosing one approach over the another. Any environmental benefit that did result arose from the conservation of uranium resources and not from differences in the way radiological waste was managed.

The study found, however, that for the various recycle alternatives (as opposed to the once-through fuel cycle) the collective dose increased by several orders of magnitude. Three radio

nuclides that were assumed to not be removed from the reprocessing plant gaseous effluent contributed to this dose: ^{3}H, ^{14}C, and ^{85}Kr. The contribution of ^{129}I and ^{131}I was much smaller because most of the iodine was assumed to be removed from the gaseous effluent

.

Although the dose to any one individual was found to be small, the large integrated (world) population exposed to the gaseous effluents drove the results. While public hearings were being held on the GESMO study and BNFP license, the Carter Administration terminated reprocessing in the U.S. The public hearings were never completed, and the Commission postponed their decision on whether to allow the widescale use of mixed oxide fuel in light water reactors. This could become an issue once again should wide-scale reprocessing be considered as a mainstream activity.

About the same time period as the GESMO study (Jan 13, 1977), EPA released 40 CFR 190 *Environmental Radiation Protection Standards For Nuclear Power Operations, Subpart B* . This rule established the environmental standard for the complete uranium fuel cycle. Two criteria were prescribed:

Subpart B section 190.10 (a) - Annual dose equivalent to any member of the public for the entire fuel cycle,

Whole body	< 25 mrem
Thyroid	< 75 mrem
Any other organ	< 25 mrem

Subpart B section 190.10 (b) - Radioactive material released to the environment per gigawatt-year electrical energy produced,

^{85}Kr	< 50,000 curies
^{129}I	< 5 millicuries
Pu and other alpha emitting emitting radionuclides with half-lives > 1 year	<0.5 millicuries

The EPA made December 1, 1979 the effective date of Section 190.10(a) except for operations associated with uranium milling which were given an effective date of December 1, 1980. The effective date for Section 190.10(b) was also established as December 1, 1979 except for ^{85}Kr and ^{129}I standards which were effective on January 1, 1983. Soon after the standards were released, stakeholders expressed concerns that the standards were overly conservative, costly, and that they would require technology that was considered to be beyond the state-of-the-art. In addition, industry believed that requirements should not be established until international agreements were reached that would restrict emissions from foreign sources. Nevertheless, EPA approved part of the standard (except for ^{85}Kr) on December 1, 1979, and a ^{85}Kr standard that was effective on January 1, 1983. By that time all reprocessing activities had ceased and interest in the new standard vanished.

Today, the EPA standard for utilization (power reactors) facilities is being met through NRC's enforcement of 10 CFR Part 50, Appendix I, Numerical Guides for Design Objectives and Limiting Conditions for Operation to Meet the Criterion "As Low as Reasonably Achievable" for Radioactive Material in Light-Water-Cooled Nuclear Power Reactor Effluents. 10 CFR Part 50 Appendix I sets the following operating limits:

Liquid Effluents	< 3 mrem whole body, or < 10 mrem to any organ
Gaseous Effluents	< 5 mrem whole body, or < 15 mrem to the skin
Radioactive iodine and other material in particulate form in effluents to the atmosphere	< 15 mrem to any organ

These limits provide the basis for realistic implementation of EPA standards for single reactor units. The remaining (non-utilization) portion of 40 CFR 190 release is divided among the rest of the fuel cycle which up to now has not included reprocessing.

D. Decommissioning

Decommissioning commercial reprocessing plants can be very costly. There is not much information available based on decommissioning experience because so few reprocessing plants have been decommissioned.

In 1976 NFS withdrew from the reprocessing business and turned control over to the site owner, the New York State Energy Research and Development Authority (NYSERDA). In 1980, the NRC suspended West Valley's license to reprocess spent nuclear fuel, and the West Valley Demonstration Project (WVDP) Act was executed to clean up the site and its facilities. Under the Act, NRC maintained certain responsibilities including prescribing decontamination and decommissioning criteria.

Significant lessons learned and regulatory actions have resulted from West Valley decommissioning experience. The cost to clean up the site to date has exceeded $2 billion, although a fund of only $4 million had been set aside for decommissioning and decontamination.

The English Sellafield reprocessing plant is currently undergoing decommissioning of their "first generation" reprocessing plants, including analytical laboratories, legacy wastes, and the "North Compound," a facility established to support Windscale pile operation and subsequently

extended to include waste storage. The total estimated cost of this "interim" decommissioning is about £20 million (equivalent to about $40M) [Sellafield, 2005].

The French UP1 reprocessing plant at Marcoule has an estimated decommissioning cost of €5.6 billion (about $7.6B), about half of which is for treating wastes stored on site [Hore-Lacey, 2007]. Thus, there is very wide range of real and anticipated reprocessing plant decommissioning costs. Additional knowledge of decommissioning experience and the extent to which decommissioning "lessons learned" are incorporated into future plants will be needed to better estimate the costs for future reprocessing plant decommissioning.

Shortfalls in decommissioning funding like that at West Valley resulted in 10 CFR Part 50 App. F *Policy Relating to the Siting of Fuel Reprocessing Plants and Related Waste Management Facilities*. Some sections of 10 CFR Part 50, appendix F, relevant to reprocessing plants are:

- Paragraph 3, which states "Disposal of high-level radioactive fission product waste material will not be permitted on any land other than that owned and controlled by the Federal Government."

- Paragraph 2, which states "...High level liquid radioactive wastes shall be converted to a dry solid as required to comply with this inventory limitation, and placed in a sealed container prior to transfer to a Federal repository in a shipping cask meeting the requirements of 10 CFR 71...Upon receipt, the Federal Repository will assume permanent custody of the waste materials although industry will pay the Federal Government a charge which together with interest on unexpended balances will be designed to defray all costs of disposal and perpetual surveillance."

- Paragraph 5, which states, "Applicants proposing to operate fuel reprocessing plants, in submitting information concerning financial qualifications as required by Section 50.33(f), shall include information enabling the Commission to determine whether the applicant is financially qualified, among other things, to provide for the removal and disposal of radioactive wastes, during operation and upon decommissioning of the facility."

Although Part 50, Appendix F might reduce the likelihood of shortfalls in decommissioning funding, the Commission in an SRM dated February 7, 2006 [NRC, 2006c], directed that an important design criterion for any new reprocessing effort will be that decommissioning costs be manageable. NRC guidance under development should help designers address these concerns at the conceptual design stage.

Any new license application will also need to address how the design and procedures for operating the facility will minimize contamination of the facility and the environment, and facilitate eventual decommissioning (Part 20.1406). This includes realistic estimates of the funds required for decommissioning (Part 72.30), including site characterization, cleanup, waste disposal, and surveillance. NRC/RES is developing a regulatory guide to implement 10 CFR Part 20.1406 to facilitate decommissioning.

Additional Nuclear Regulatory Commission regulatory requirements related to decommissioning include:

- 10 CFR Part 20
  - Subpart E, Regulatory Criteria for License Termination, which gives Radiological criteria for unrestricted use (§20.1402)
  - Criteria for license termination under restricted conditions (§20.1403)
  - Alternate criteria for license termination (§20.1404)
  - Public notification and public participation (§20.1405)
  - Minimization of contamination (§20.1406)
- 10CFR Part 72
  - Subpart B, §72.30, Financial assurance and record keeping for decommissioning
  - Subpart D, §72.54, Expiration and termination of licenses and decommissioning of sites and separate buildings or outdoor areas.

IX. ISSUES ASSOCIATED WITH LICENSING AND REGULATING FUEL RECYCLE FACILITIES

The focus of this chapter is on licensing and regulation of industrial-scale fuel reprocessing and refabrication facilities. In consideration of the foregoing information there are a number of licensing or regulatory issues that warrant consideration before receipt of a license application. The following sections identify these issues and provides insight into their resolution.

A. Selection or development of licensing regulation(s) for recycle facilities

A key issue to be decided before receipt of a license application for SNF recycle facilities is what primary regulation(s) should be used to license each facility and the approaches (e.g., probabilistic vs deterministic safety assessments) to be used in developing a new regulation or modifying and existing regulation. For the purposes of this paper it is assumed that the specific regulations and approaches used to license well-established fuel cycle facilities and operations (e.g., interim storage of spent fuel, radioactive material transportation, uranium fuel fabrication, reactors) will not change.

The list of novel facilities for which decisions concerning the appropriate licensing regulations and approaches will be required include:

- Reprocessing fuels from LWRs and later for other advanced reactors
- Fabrication of fuels to recycle transuranic or fission product elements, or for some new reactor designs (e.g., graphite-moderated reactors)
- Disposal of new types of wastes such as cladding and transuranic (GTCC) waste,
- Extended interim storage of intermediate-lived radionuclides, Cs and Sr, followed by *in situ* disposal.

The following sections discuss some of the factors that should be considered when making these decisions.

1. Multiple regulatory paths are available

As was discussed in Sect. VIII, there are a number of existing regulations as well as the possibility of developing one or more entirely new regulations for licensing recycle facilities. None of the existing regulations is entirely suitable for the fuel recycle facilities. While detailed reasons for this view are given in Sect. VIII.B, the overarching reason is that existing regulations were designed for (a) reactors where maintaining heat removal capability in situations involving fast transients in a core with a high power density is an important purpose of the regulations but where there are modest chemical hazards and few concentrated solutions of radionuclides, or (b) for facilities that handle relatively small amounts of radioactivity because they only process uranium. Maintaining the fast-response capability to remove large amounts of decay heat is not particularly important in fuel recycle facilities, but there are substantial amounts of radioactivity

in fluids and a higher likelihood of inadvertent criticality, in addition to a variety of toxic and potentially flammable or reactive chemicals in routine use. These differences lead to the need for substantial modification of existing regulations or development of new regulations directed at specific types of facilities to address the specifics of fuel recycle facilities.

2. NRC Staff's Proposed Options and Commission Direction for Licensing GNEP Recycle Facilities

The NRC staff [NRC, 2007a] identified four options for developing a regulatory framework to license advanced reprocessing and burner reactor facilities, which are summarized in Table 20.

Table 20 Regulatory Options for advanced fuel recycle and burner reactor facilities

Option	CFTC	ABR
1	Revise Part 70 to include spent fuel reprocessing; consider additional safety analysis requirements for a reprocessing facility; and revise Part 50 as appropriate.	Use existing Part 50, with exemptions, as necessary, or a suitably modified and adapted Part 52 process, to address sodium-cooled fast reactor technology.
2	Same as Option 1.	Create a new regulation specific to advanced recycling reactors (Part 5X).
3	Develop a specific GNEP regulation applicable to fuel reprocessing, refabrication and recycle reactors (10 CFR Part XX).	
4	• Issue a Federal Register Notice (FRN) in FY 2007 soliciting public and stakeholder input on desirable attributes of the regulatory framework for GNEP, as well as comments on whether there are any major substantive technical issues relating to an accelerated schedule that may affect development of GNEP regulations and/or how such facilities should be regulated. • After consideration of public and stakeholder comments, decide on either issuing an Order or directing a rule making to establish specific requirements. • Concurrently, develop a licensing-basis document for fuel separations/fuel fabrication/advanced recycling reactor facilities to be used by the Commission in developing an Order or as the technical basis for the rule making process, as appropriate	

The NRC staff's options are similar to those described in Sect. VIII.B of this paper. After evaluating the pros and cons for each of the options, the staff recommended the Commission proceed with Option 1 in a phased approach. The first phase would involve development of the regulatory framework by preparing technical basis documents to support rulemaking for 10 CFR Part 70 (for fuel recycle facilities) and potential rule making for sodium-cooled fast reactor. The first phase would also involve exploration of whether 10 CFR Part 52 could be modified to address sodium-cooled fast reactors and a gap analysis on 10 CFR Part 50 to identify what changes in regulatory requirements would be necessary to license recycle facilities and an advanced burner reactor.

In the second phase the NRC staff would shift to Option 3 and develop a new regulation for GNEP fuel recycle and reactor facilities. The analyses performed in the first phase would be used to evaluate whether there are unique programmatic or technical interrelationships among all closed fuel cycle technologies as a basis for developing a new regulation for advanced fuel recycle and burner reactor facilities.

In a SRM responding to the NRC staff's recommendations, the Commission [NRC, 2007b] directed the NRC staff to begin developing the regulatory framework to license SNF recycle facilities using an option based on 10 CFR Part 70 by preparing:

- A technical basis documentation to support rulemaking for 10 CFR Part 70 with revisions to 10 CFR Part 50 as appropriate to eliminate its applicability to licensing a SNF reprocessing plant, and

- A gap analysis for all NRC regulations (10 CFR Chapter I) to identify changes in regulatory requirements that would be necessary to license a reprocessing facility.

Title 10 CFR Part 70 has been used to license fuel fabrication facilities and is currently the basis for reviewing the license application for the Mixed-Oxide Fuel Fabrication Plant (MFFP) on the Savannah River Site. Experience and lessons learned from previous and ongoing use of 10 CFR Part 70 to license fuel fabrication facilities are likely to be useful when deciding how it should be modified to license SNF recycle facilities.

3. Important factors in developing regulations for SNF recycle facilities

There are important aspects of 10 CFR Part 70 and potential modifications thereto that will need to be considered for it to be an efficient and effective regulation for licensing SNF recycle facilities, such as:

- Use of an Integrated Safety Analysis (ISA): 10 CFR Part 70 calls for the use of an ISA to evaluate the in-plant hazards and their interrelationship in a facility processing nuclear materials. Doses to the public are typically estimated using a scenario-based approach. Use of ISA is an important step towards quantifying risk as compared to traditional conservative, scenario-based deterministic approach. The primary reason for this is the consequences of accidents in or routine releases from fuel cycle facilities is relatively small compared to consequences of accidents at reactors and the effort of doing probabilistic analyses has not been justified. However, the effort required to prepare an ISA that is adequate for complex SNF recycle handling liquids containing substantial quantities of concentrated cesium, strontium, and transuranic elements is likely to approach the effort that would be required to evaluate risks using a probabilistic risk analysis (PRA). The Committee and the ACRS have previously recommended [ACNW&M, 2002, 2006] that a regulation based on PRA is preferable to one based on ISA because the latter has significant limitations regarding its treatment of dependent failures, human reliability, treatment of uncertainties, and aggregation of event sequences.

- Best estimate vs conservative: A companion issue to that of probabilistic vs. deterministic approaches is whether analyses should be based on data and models that represent the best estimate of what might really occur with an associated uncertainty analysis to explore the effects of incorrect data or models, or should be based on demonstrably conservative data and models. Most regulations and license applications for fuel cycle facilities have used a conservative, deterministic approach. The Committee has letters on record pointing out problems with using this approach (see Appendix C) with some of the most important being that using very conservative assumptions can mask risk-significant items, and that most conservative analyses are not accompanied by a robust uncertainty analysis.

  In at least one recent instance DOE has used a dose assessment based on best estimates [DOE, 2005]. This, when accompanied by a robust sensitivity and uncertainty analysis might be appropriate for less complex fuel cycle facilities. While a probabilistic analysis based on conservative data and models could be performed, there is no evident benefit to doing so and the conservatism would render the accompanying uncertainty analysis meaningless.

- One-Step Construction and Operating License (COL): 10 CFR Part 70 allows for a one-step licensing process which means that the design and process details necessary to review the adequacy of a recycle facility would not available until relatively late in the licensing process. This approach is likely to be more efficient for the NRC and less burdensome to the applicant than the traditional two-step licensing process for facilities containing well established processes and equipment and where there is a base of licensing experience (e.g., reactors, fuel fabrication plants). However, SNF recycle facilities have the potential to involve equipment, chemicals, and processes that are unfamiliar to NRC staff and that could result in the need for multiple requests for additional information from licensees and/or extensive pre-licensing interactions between NRC staff and the licensee to identify and resolve potential licensing issues. The proposed Yucca Mountain repository is an example of an unfamiliar facility where a two-step licensing process has been adopted and extensive pre-licensing interactions have occurred.

- Accommodating the Potential Future Diversity of 10 CFR Part 70 License Applications: 10 CFR Part 70 is also used to license many nuclear material processing facilities other than those for fuel recycle. Such facilities are typically much smaller, less costly, and less complex than anticipated SNF recycle facilities to the point that imposing requirements appropriate for recycle facilities could be unduly burdensome to some applicants.
- Risk-informed, Performance-Based[32]: A risk-informed regulatory approach is one in which risk provides an important insight for licensing a facility but where other considerations such as cost, environmental impacts, etc. can be balanced against the required extent of risk reduction. The ALARA philosophy epitomizes a risk-informed approach. Risk-informed regulations and licensing approaches for a wide range of

[32] NRC Commission defined risk-informed regulation in their white paper, "Risk-Informed and Performance-Based Regulation" as "...a philosophy whereby risk insights are considered together with other factors to establish requirements that better focus licensee and regulatory attention on design and operational issues commensurate with their importance to public health and safety."

situations and the opportunities for focusing scarce resources on the most-risk significant items in very complex facilities would indicate its appropriateness in this instance. It is prudent for regulations for licensing fuel recycle facilities to include provisions that allow the regulator to make exceptions on a case-by-case basis.

A corollary factor to a regulation being risk-informed is that it is performance-based. That is, the criteria for granting a license are expressed in terms of the requirements the applicant must meet but not the means by which the applicant meets the requirement. For example, a regulation that requires that a dose limit be met is performance based but one that requires use of a specific technology is not.

- Programmatic Specificity of Changes to 10 CFR Part 70: The NRC staff paper presenting options for licensing SNF recycle facilities focused on DOE's GNEP and the facilities currently being proposed by DOE. The scope, functional requirements, size, and timing of these facilities is still evolving and likely to change in unknowable ways in response to factors such as technology development, budget considerations, stakeholder input, and broader U.S. and international decisions on nuclear and energy policy. It would be inefficient to initially develop program-specific regulations and then have to revisit the regulations in the future for the purpose of generalizing them.

B. Impacts on related regulations

In addition to the need to establish the approach(es) to be used for the primary licensing regulations for fuel recycle facilities, it will be necessary to evaluate the impact that recycle facilities and operations might have on other regulations that might be invoked in the licensing framework or that might not yet exist and have to be developed. The following sections discuss various features of fuel recycle facilities and operations and how these features might impact regulations other than the primary regulation.

1. Potential impacts of new radioactive product, effluent, and waste materials

a. Identification of new product, effluent, and waste materials from SNF recycle

Fuel recycle facilities using any of the UREX process would produce a variety of new radioactive product, effluent, and waste materials for which the current NRC regulatory system may not be adequate. Examples of new materials are:

- Recovered uranium that will contain small amounts of contaminants such as transuranic actinides (e.g., ^{237}Np), fission products (e.g., ^{99}Tc), ^{232}U, and ^{236}U.

- A gaseous effluent stream from the fuel reprocessing plant that initially contains most of the intermediate-to-long-lived volatile radionuclides such as ^{129}I, ^{85}Kr, ^{14}C, and ^{3}H in the fuel fed to the plant. Historically in the U.S. most (~99%) of the ^{129}I has been removed

from the effluent stream and managed as a solid waste. At present the La Hague plant and THORP capture the iodine by caustic scrubbing and release it to the sea, relying on the enormous amount of iodine in the sea to provide adequate isotopic dilution. Caustic scrubbing also captures ^{14}C which is released to the sea. The new Rokkasho-Mura reprocessing plant will capture the iodine on a solid sorbent the disposition of which has not yet been decided. Radionuclides in the gaseous effluent other than those mentioned are being released to the atmosphere.

- Spent fuel metal hardware containing small amounts of residual spent fuel, and potentially the dissolver solids and ^{99}Tc, that has been melted to form a monolith or compacted.

- Wastes containing a mixture of recovered cesium and strontium including the intermediate-lived radioactive isotopes $^{135,\,137}Cs$ and ^{90}Sr plus very small amounts of their short-lived (^{137m}Ba and ^{90}Y) isotopes and amounts of their stable ($^{135,137}Ba$ and ^{90}Zr) that are eventually equivalent to the initial amounts of $^{135,\,137}Cs$ and ^{90}Sr.

- Substantial volumes of materials and equipment contaminated with greater than 100 nCi/g of transuranic radionuclides

- A fission product waste stream containing lanthanides and other fission products that is less radioactive and decays more quickly than what has been produced or planned for in the past

The estimated volumes, masses, radioactivity, thermal power, and classification of wastes from the UREX +1a flowsheet are presented in Table 19. Production of these wastes would raise a number of issues that are discussed in the following paragraphs.

b. Classification of wastes

Classification of the wastes is an important determinant of how they must be treated, stored, transported, and disposed of. Under current law and regulations the classification of the various wastes would range from Class A LLW to HLW. However, many of these wastes and the proposed management approach associated with them were not anticipated as the current waste classification system evolved so the appropriateness of the classification remains open to question. Specific questions regarding waste classification include:

- Whether the Cs/Sr waste will require a waste determination and DOE decision that it is "wastes incidental to reprocessing" (WIR) so that it would not require disposal in a deep geologic repository.

- The stable end point of cesium decay is stable isotopes of barium. A waste containing barium is considered to be characteristically hazardous by virtue of its toxicity if the

leach rate of the barium in standardized tests exceeds a prescribed limit. As a consequence, leaching tests will have to be performed on the Cs/Sr waste form to ascertain whether leached barium concentrations are too high and, if so, the waste will require further treatment before disposal or be managed as a mixed waste.

- Existing technology can reduce the TRU element and other radionuclide concentrations in any uranium product deemed to be a waste sufficiently low so that the waste would be Class A LLW. Waste containing ^{85}Kr and ^{135}Cs in any concentration would be Class A LLW under the present system because these radionuclides are not listed in the waste classification tables in 10 CFR Part 61. Such wastes were not contemplated when the waste classification tables in 10 CFR Part 61 were finalized and the appropriateness of these classifications requires further evaluation.

c. Waste forms

Determination of the requirements for waste forms and packaging for wastes such as the volatile radionuclides, ^{137}Cs, and ^{90}Sr is necessary to define how the waste must be treated and also has a significant impact on the selection of recovery processes for some species such as those in gaseous effluents. Waste form options for the volatile radionuclides were studied in the 1970s and 1980s but process development was not completed and a preferred waste form was not selected. Selection of a waste form for ^{85}Kr is particularly challenging because it is a non-reactive gas under all but extreme conditions. Large amounts of ^{137}Cs and ^{190}Sr have been made into chloride and fluoride chemical forms, respectively, and stored by DOE in water pools at Hanford for decades. However, the chloride and fluoride do not appear to be appropriate forms for near-surface disposal such as that being suggested by DOE. DOE has proposed using an aluminosilicate waste form. 10 CFR Part 61 does not address waste forms or packaging for these materials even if they were to be classified as Class C or less, and there is no regulation addressing the form of GTCC LLW.

d. Distribution of radionuclides in product, effluent, waste, and process streams

There is no technical basis for predicting the distribution of some radionuclides in recycle plant product, effluent, waste, and process streams. This distribution is necessary for DOE to determine the process routing required by each stream (e.g., does a stream that contains iodine that would be released during subsequent high-temperature processing need to go to iodine recovery?). This distribution is also necessary for NRC to estimate doses from release of effluents or disposal of wastes, and to evaluate the consequences of accidents. Important radionuclides in this regard include:

- Tritium: To what extent is the zirconium tritide on cladding surface released during voloxidation, during acid dissolution of the SNF, and during the melting of the fuel assembly hardware to yield DOE's proposed waste form?

- Iodine: Do iodine species form that are not trapped by available technologies and which might exceed the ~0.5% allowable release? What fraction of the iodine is associated

with dissolver solids and what fraction is released when the dissolver solids are included in the final waste form that involves high-temperature melting?

- Technetium and neptunium: What fraction of the technetium is associated with the dissolver solids (e.g., as PdI_2)? Of the neptunium and dissolved technetium, a small but potentially significant fraction can be found in various waste streams. What fractions are associated with the various waste streams and products from the reprocessing plant?

- Cladding: How much of the SNF remains with the cladding? Is the radionuclide distribution the same as the SNF or are some elements preferentially associated with the cladding? This is somewhat important in a waste disposal situation but would be very important DOE proposals involving recycling the cladding material becomes reality.

e. Disposal technology

Requirements for disposal technologies appropriate for some of the wastes listed above has not been determined. For those wastes classified as GTCC the technology and possibly a specific site may be identified as part of DOE's ongoing effort to prepare an EIS on this subject. The GTCC disposal facility will be licensed by the NRC using a regulatory framework that has not been decided. However, it is not evident that the EIS will consider potential GTCC wastes that are unique to recycle such as cladding waste, ^{137}Cs and ^{90}Sr, miscellaneous wastes containing greater than 100 nCi/g TRU (e.g., equipment and analytical wastes, protective equipment, HEPA filters), and wastes containing ^{99}Tc, ^{129}I, and ^{14}C.

Identification of requirements for an appropriate disposal technology (i.e., the acceptability of near-surface disposal and conditions for same) for intermediate-lived radionuclides such as ^{85}Kr and tritium may depend on the ability of the selected waste form or package to contain substantial inventories and concentrations of these radionuclides until they decay to innocuous levels.

Uranium recovered from fuel reprocessing may exceed its demand leading to the potential need to dispose of some of it. Determination of the acceptability of this uranium for near-surface disposal will need to consider the potential risks from species such as ^{237}Np and ^{99}Tc that are often more mobile than uranium under the geohydrological conditions that prevail in the near the surface at many sites and the affect of the $^{232, 236}U$ on the radiological impacts of the uranium. The NRC staff is undertaking an analysis of whether depleted uranium warrants inclusion in the waste classification tables in 10 CFR Part 61 pursuant to Commission direction [NRC, 2005].

f. Repository licensing regulations

Use of the any of the UREX flowsheets for recycle would change the fundamental nature of a deep geologic repository to the point that the requirements in existing repository regulations would require re-evaluation. By removing essentially all of the actinides (uranium and heavier), ^{137}Cs, ^{90}Sr, ^{99}Tc, and ^{129}I, potentially the cladding, tritium, ^{14}C, and ^{85}Kr from the repository the

result would be a compact repository waste generating considerably less penetrating radiation and decay heat that will decay much more quickly than for SNF or traditional HLW. The amount of actinides and long-lived radionuclides that dominate risks estimates for the currently proposed repository would be reduced to levels that might make other radionuclides that are presently not risk-significant dominant in performance assessments. If some of the long-lived wastes mentioned above (Tc, I, C, cladding, and solid wastes containing some transuranic elements) were to be disposed of in the deep geologic repository, the waste volume would increase somewhat and it would introduce some radionuclides important to public risk in new waste forms for which there is little experience in predicting long-term performance. As a consequence of the foregoing, aspects of existing regulations and guidance concerning repository licensing that are driven by decay heat, penetrating radiation, the actinides, the degradation rates of the spent fuel cladding and matrix, and the dominance of radionuclides such as ^{99}Tc and ^{237}Np may become irrelevant. On the other hand, the performance of multiple (and presently unknown) waste forms tailored to specific radioelements over very long time periods could become very important. The implications of this to the requirement to predict the performance of the repository to the time of peak dose has yet to be determined.

g. Uranium handling and disposal facilities

The additional radionuclides present in recovered uranium as compared to unirradiated uranium need to be taken into account when recycling the uranium to enrichment plants or handling it in other parts of the fuel cycle. The non-uranium isotopes tend to accumulate in certain portions of enrichment equipment and to be concentrated into a waste stream by decontamination operations during maintenance. This requires that enrichment plants have features to (a) process wastes containing transuranic and fission product elements, and (b) detect beta-emitting radionuclides and distinguish among alpha-emitting radionuclides. The ^{236}U is a neutron absorber that detracts from the value of the recycled uranium and leads to increased production of ^{237}Np in fuel made from it. While present in very small quantities (about 1 ppbw), decay of the ^{232}U in the recovered uranium to a ^{208}Tl decay product that emits a very penetrating 2.62 MeV gamma ray that must be taken into account when designing facilities for handling recycled uranium.

2. Novel facilities

a. Cs/Sr Storage/Disposal Facility

Fuel recycle using a UREX flowsheet or similar would require facility types that have not been licensed in decades or ever. Regulatory issues concerning many of the major facilities were discussed in Sect. VII and issues concerning licensing a GTCC disposal facility were discussed in Sect. IX.B.1 and will not be repeated here. However, DOE is considering a disposal technology that has not been anticipated in existing regulations. Specifically, DOE is considering an engineered near-surface interim storage facility that will store $^{135, 137}$Cs and ^{90}Sr waste forms for about 300 years at which time the radionuclides will have decayed to less-than-Class C levels. At that time the storage facility will be converted to a disposal facility with the waste forms remaining in place. Using this type of facility is one way to achieve DOE's goal of greatly increasing the capacity of the repository because it removes a major source of decay heat from the repository. This approach raises regulatory issues such as:

- Whether the Cs/Sr waste is classified when it is produced or after the monitored interim storage period

- Whether a near-surface facility containing radionuclides emitting considerable amounts of heat and penetrating radiation can be reliably designed, built, and maintained for as long as 300 years

- Whether such a long-term storage facility would be suitable for conversion to a permanent disposal facility at that time and the technology to be used in such a conversion.

b. Storage facility for transuranic element product

Construction and operation of a fuel reprocessing plant before actinide burner reactors are available would result in the need to store significant quantities of transuranic actinide products containing Np, Pu, Am and Cm, possibly mixed with fission products emitting penetrating radiation to provide some degree of self protection, until actinide burner reactors become available. Such a scenario would involve regulatory considerations such as the acceptable form and technology for storing such a product, and how best to safeguard it.

3. Novel process streams and paradigms for safeguards and security

A fundamental feature of DOE's UREX flowsheets approach is that fissile material (primarily plutonium) is never completely separated from other radionuclides. In particular, DOE's approach calls for the plutonium to remain mixed with other radionuclides (e.g., other actinides, possibly some fission products) that impart some degree of self-protecting characteristics by releasing penetrating radiation. It is axiomatic that any two substances can be separated with sufficient effort, although the magnitude of the effort can vary from trivial to impractical. Current levels defining what amount of radiation is "self-protecting"[33] (e.g., 100 R/hr) were conceived with a spent fuel assembly (180 to 500 kg HM of spent fuel) in mind. It is not clear current values are applicable to or even achievable for amounts of plutonium and fission products on the order of 10 kg. The foregoing raises issues such as how much penetrating radiation from what amount of material is enough to be self protecting, how difficult does the separation of plutonium from other radionuclides have to be for the plutonium to be deemed self protecting, and how the concept of a self-protecting material is factored into the safeguards and security paradigms that will be used in the recycle facilities, if at all? These issues remain to be considered in regulations that will be used to support licensing.

4. Evaluation of integrated plant performance

[33] The term "self protecting" is an arbitrary classification of protection derived from the radiation dose associated with irradiated spent commercial fuel. It is generally taken to be the protection afforded by a dose rate of 100 R/hr, which is assumed to be high enough to deter the potential theft of the spent fuel or of anything else having at least that dose rate.

The UREX flowsheets are extraordinarily complex. In essence, a UREX flowsheet includes at least four inter-connected processes operating in series. Each of these processes is as complex as the traditional PUREX process and some promise to be more difficult to control, e.g., TALSPEAK. Additionally, it is likely to include numerous types of equipment beyond what have been included in PUREX plants to recover additional radionuclides from gaseous effluents, to treat the many new waste streams mentioned previously, and to recycle various materials to reduce amounts of effluents and wastes. These complexities indicate that such a plant is likely to be difficult to operate, requiring extensive and expensive operator training and sophisticated control and monitoring systems. Of more relevance to a regulator is the difficulty and resource requirements to develop the technical capability (expertise, analytical tools) to evaluate whether such a complex system can be safely operated which involves predicting the behavior of myriad pieces of equipment, the piping connecting them, and the radioactive materials in them under normal and accident conditions. This task is made even more difficult by factors such as (a) the potential for various minor species to appear unexpectedly in a unit operation because of minor upsets in internal recycle which can cause unanticipated hazardous conditions, and (b) the ramifications of a equipment failure and quick shutdown of an entire inter-connected plant. Inter-process surge capacity may be a very important design feature to help manage such problems.

5. Design and operate with decommissioning in mind

The NRC Commissioners have stated that an important goal in licensing nuclear facilities in general, and fuel recycle facilities in particular, is to include requirements to minimize historical problems in decommissioning the facilities at the end of their operating life. This is a relatively new NRC requirement, and one that is very worthwhile. Residual site contamination, stored wastes, environmental problems, cleanup worker health and safety, and cost are all important issues affected by how decommissioning is carried out. How decommissioning is carried out is, in turn, determined by how facilities are designed and operated. Thus, obtaining a license to construct and operate fuel recycle facilities needs to include requirements to facilitate ultimate facility decommissioning. Specifying such requirements will be challenging because (a) the commercial plant designer and the ultimate plant operator will want freedom to build the plant to efficiently accomplish the principal plant mission, namely spent fuel recycle and (b) the experience upon which to base the requirements for recycle facilities is not yet in hand.

Consolidated general decommissioning guidance has been provided by the NRC [NUREG, 2007] and a MOU on decommissioning between the EPA and NRC has been signed [MOU, 2002]. Beyond this, the Committee and NRC staff are presently working within their respective mandates to gather 'lessons learned' related to decommissioning of fuel recycle facilities. This information is planned to be used as a basis for recommending what additional requirements should be included in existing or new regulations concerning the design, construction, and operation of fuel recycle facilities to facilitate decommissioning and license termination. A separate white paper is being prepared on this issue.

C. NRC Test Facilities

As is evident from the foregoing, recycle facilities that are capable of meeting GNEP goals will involve many processes and pieces of equipment that have never been used at a commercial

scale or in a licensed facilities. As a consequence, there is no established basis for assessing the performance and safety implications of these processes and equipment. It is expected that DOE will base its assessments on information it obtains from lab-scale tests using SNF in hot cells at its national laboratories plus engineering or pilot-scale equipment testing possibly using uranium.

When licensing facilities the NRC normally performs confirmatory research to validate key data and assumptions made by an applicant. In the case of recycle facilities, such research would require highly specialized facilities (e.g., hot cells) and equipment that is available only in a limited number of places, none of which are part of the current NRC community. The lack of NRC infrastructure relevant to SNF recycle raises the issue of how the NRC will perform confirmatory research. Options that might be considered include observation of DOE experiments, contracting with DOE or possibly the very limited number of commercial firms for the use of hot cells, and collaboration with other countries to obtain access to hot cells.

D. Operator Licensing Examinations

It will be necessary to create and grade licensing examinations for fuel recycle facility operators at several levels of competence and responsibility. There are several levels of operator training for facilities such as reprocessing plants. In addition there is "cross training" in plant operations for other personnel such as guards and maintenance crews. Experience has shown that it is not easy to train and qualify plant operators. It is difficult, time consuming, and expensive. It will be challenging to find people qualified to prepare and administer proficiency examinations. The elapsed time since such examinations were administered and the likely requirements for new examination areas such as those related to proliferation prevention and detection and safeguards make this an important area for consideration.

E. Sigma ID Requirements

It is apparent from Table 14 that there are major differences among IAEA, NRC and DOE on the requirements for the permissible significant (SIGMA) Pu inventory differences (ID) with regard to the Sigma ID, and the frequency of both long-term shutdown inventory and interim frequency requirements. This disparity could have a significant impact on facility design and will need to be addressed and resolved to the extent practicable for any recycle facility licensed in the U.S.

F. Timing and urgency

As a practical matter, the number of fuel recycle facilities for which license applications are anticipated and when they are anticipated is an important factor in deciding the regulatory nature and urgency of the process approach to be used. As this paper is written DOE's announced schedule for building recycle facilities goes no further than a major decision in June 2008 on whether and how to proceed based on the contents of a Programmatic Environmental Impact Statement (PEIS) now in preparation although they have established a planning milestone for initial operation of a SNF reprocessing plant in 2020 [GNEP, 2007b].

1. Time required to prepare and be ready to review a license application for a UREX flowsheet

Assuming DOE decides to proceed an orderly program to develop, demonstrate, and deploy one of the UREX processes in a first-of-a-kind recycle facility and that adequate funding is received to support this decision, a license application might be received as early as a decade from now could range significantly longer. The basis for this judgment is:

- There is still considerable work to be done in taking processes that have only been tested on SNF separately at a lab scale and taking this through a larger-scale integrated demonstration plus the need to perform equipment testing using non-radioactive materials or uranium. The SNF reprocessing demonstration and equipment testing can proceed in parallel.

- Considerable work is needed before the reprocessing plant off-gas system can be designed because:
  - Integrated off-gas systems likely to be acceptable in the U.S. (i.e., no release of ^{129}I to the sea, ^{85}Kr recovery, potential recovery of ^{3}H and ^{14}C) have never been operated in any large facility
  - Separate processes for the recovery of the last three species have never been operated in any large-scale facility.
  - Development of processes for the last three species was never completed although some work on ^{85}Kr removal processes has continued.
  - Disposal destinations and waste forms are not yet established. Significant studies and development work will be required.
  - The process of establishing radionuclide release limits for reprocessing plant gaseous effluents must be re-engaged because it was never completed and the methods other than those used to establish the existing limits (e.g., reliance on collective dose to large, heterogenous populations as a measure of risk) are now favored (see Sect. X.A).

  Development of release limits for radionuclides in reprocessing plant gaseous effluents and completing the required technology development is likely to be on the critical path to a license application because of the need to develop an acceptable conceptual approach to establish the limits, develop cost estimates for various levels of radionuclide removal and risks associated with each level as a basis for the limits, go through the process to establish the limits, and undertake the necessary technology development and demonstration. These steps can be performed in parallel only to a limited extent.

- After the foregoing are completed then a facility design, license application, and other environmental documents will need to be prepared.

It is likely that an orderly, adequately funded effort to develop the regulations and guidance required to license a fuel reprocessing plant will also take about a decade. The basis for this judgment is:

- Decisions must be made on a number of policy issues (e.g., ISA vs PRA, performance-based requirements or not, how to license a complex facility without unduly burdening simple facility license applicants) before work to establish the primary licensing regulation can begin in earnest and an analysis (already underway) to evaluate gaps in other regulations is needed.

- Modifying an existing regulation (or developing a new regulation) to be a risk-informed licensing regulation for a facility as complex as a reprocessing plant using a UREX flowsheet or equivalent is a major undertaking.

- The provisions of many regulations other than the primary licensing regulation that were identified in the gap analysis will require revision. Regulations where some degree of change is likely to be required include 10 CFR Parts 30, 50, 51, 52, 61, 63, 73, 74, the framework for civilian waste classification, and the regulation for licensing disposal of GTCC waste. This may include extensive involvement in developing the limits for radionuclide releases to the gaseous effluent.

- Most of the guidance concerning SNF reprocessing plants dates from the mid-1970s and will have to be redone to reflect current standards, technology, and regulations.

- Doing all of the foregoing activities in parallel is likely to require a large 'bubble' in expert staff levels and budgets that may not be available. If the bubble is not possible an alternative approach would involve prioritizing the above activities and undertaking them more sequentially which will increase the time required.

The preceding discussion and the uncertainties therein indicates that the time required for DOE to submit a license application for a UREX-based SNF reprocessing plant is commensurate with the time required for the necessary suite of regulations and supporting guidance to be developed.

2. Time required to prepare and be ready to review a license application for a modified PUREX flowsheet

The premise of the timing estimates in the foregoing section is that DOE will propose to deploy a UREX flowsheet and the NRC will be faced with having to review a license application for same. However, DOE has recently given indications that the initial fuel reprocessing plant may be based on a Purex flowsheet modified so that it does not produce a pure plutonium product such as a COEX™. The implication is that the facility would be designed so that other capabilities (e.g., Cs/Sr removal, separation of a product composed of all TRU elements) could be incorporated in modules to be added in the future. This approach might involve storage of the Purex raffinate as an acidic liquid pending addition of the new modules to process the stored raffinate.

If DOE were to adopt this approach there would be two important implications:

- Most of the technology required to prepare a license application exists. The difficult aspects of UREX (relatively new technologies needing to be integrated with a modified Purex and each other) would be deferred pending additional development.

- The exception to the preceding bullet concerns release limits for radionuclides in gaseous effluents. As discussed earlier, the regulations providing the design basis for limiting such releases and the technology for meeting these limits are not yet available. Such limits and technology need to be established to reprocess SNF using any flowsheet including a modified Purex.

Under a modified Purex approach it is possible for the time required to prepare a facility design, license application and supporting environmental documentation within a ~5 years (allowing time for budgeting plus design and document preparation) with one important exception: the off-gas treatment system. As described earlier, designing the off-gas system depends first on establishing release limits for key radionuclides in the gaseous effluent and then developing an off-gas treatment system capable of meeting the limits. Such a scenario still requires specification of release limits for radionuclides in the gaseous effluent but now earlier than in a scenario where DOE would have to complete development and demonstration of a UREX flowsheet. The priority of establishing these release limits was stated by representatives of the two major reprocessing organizations in the Committee's July 2007 meeting.

X. OTHER IMPORTANT ISSUES RELATED TO LICENSING

A. Completion of generic environmental documentation and standards

In the 1970s when nuclear fuel recycle was being aggressively pursued by AEC/ERDA/DOE efforts were undertaken to prepare a generic (programmatic) environmental impact statement (GEIS) on nuclear fuel recycle and by EPA to develop standards for radionuclide releases from recycle facilities. This effort was stimulated by and intertwined with the license application for the Barnwell Nuclear Fuel Plant. Some work continued on both fronts even after President Carter banned nuclear fuel reprocessing in the U.S. and the BNFP license application was withdrawn.

The GEIS and BNFP licensing efforts became the platform for a contentious debate over whether the U.S. should pursue fuel recycle. As discussed in Sect. VII.C, the GEIS effort ended with the publication of the GESMO document. The scenarios considered in that document did not encompass recycle scenarios now being proposed and consequently this document is probably not useful. However, DOE has recently initiated preparation of what is essentially the follow-on to GESMO by issuing a Notice of Intent [DOE, 2007] to prepare a GNEP programmatic EIS.

The EPA undertook an effort to develop environmental radiation protection standards for the nuclear fuel cycle in the 1970s. Briefly, the approach used by the EPA was to assess the ability of existing and developing sequences of processes for removing various radionuclides from effluent streams as expressed in terms of the collective dose reduction that would result from each incremental process. The cost of each incremental processes was evaluated using then-standard cost-benefit techniques. At some point the cost per unit dose reduction ($/man-rem) from the last incremental process was deemed excessive and the extent of radionuclide removal without the last incremental process became the bases for the standard. The cost-benefit analyses were done for all major steps of the nuclear fuel cycle (e.g., uranium mining and milling, reactor operation, and reprocessing) based on technical studies supported by EPA and NRC. The result is codified in 40 CFR Part 190, *Environmental Radiation Protection Standard for Nuclear Power Operations*. Of particular relevance to fuel recycle is 40 CFR 190.10(b) which limits the release of ^{85}Kr and ^{129}I from normal operations of the uranium fuel cycle. Because fuel reprocessing is the only step of the nuclear fuel cycle that could release significant amounts of these radionuclides during normal operations, these limits are effectively release limits for the fuel reprocessing gaseous effluent. This standard was adopted by the NRC in 10 CFR Part 20.1301(e).

From the perspective of decades of hindsight, 40 CFR Part 190 raises a number of concerns as follows:

- The factors by which ^{85}Kr and ^{129}I must be reduced are approximately 7-fold and 200-fold, respectively. The evaluation which led to these factors was based on effluent control technologies that were under development at the time, but had not been demonstrated or deployed. Because fuel recycle was abandoned development was never completed. Thus, meeting the standard with available technologies may not be not

feasible.

- Background information accompanying the standard indicated that studies concerning limits on releases of ^{14}C and ^{3}H were underway. These studies remain to be completed and, thus, the standard may be incomplete.

- The cost-benefit approach used in the analyses involved calculating the collective dose by integrating very small doses over very large populations and distances, and comparing them to then-common metrics such as a limit of $1000/man-rem to determine whether additional effluent controls were justified. As has been observed in Committee letters and the ICRP, such a comparison is questionable and should not be used in favor of using dose to a maximally exposed individual or critical group.

- The scope of 40 CFR Part 190 does not include refabrication of fuels enriched with plutonium or actinides other than uranium. This addition would presumably be necessary for fuel recycle to proceed and, thus, the standard is not yet complete.

In summary, the EPA standard on which effluent release limits are based may impose requirements that are infeasible in the near-term, is incomplete, and is based on analysis techniques that have become questionable over the years.

B. Obtaining adequate numbers of qualified staff

Implementing fuel recycle will require a substantial number of staff knowledgeable about the technical and regulatory aspects of fuel recycle facility design and operation. The design and operation of the fuel reprocessing and recycle fuel fabrication facilities are particularly challenging because staff trained as nuclear chemical operators and engineers is required.

With the decline of work in the civilian nuclear fuel cycle in the 1976 - 1985 time frame to essentially nil and cessation of defense reprocessing activities in the following decade, older workers have moved into other areas or have now retired, and their expertise has not been replaced because there has been little demand. While the Nuclear Navy continues to offer a good supply of reactor operators, there is no parallel source for nuclear chemical operators, who are usually people that have an associate degree and are then trained on the job. As noted earlier, recycle facilities are very complex and the failure rate of those examined is high as evidenced by the experience at NFS and BNFP. Similarly, nuclear chemical engineers were historically people having an undergraduate degree in chemical engineering that obtained graduate degrees in nuclear engineering and then practical experience on the job. Unfortunately, nuclear chemical engineering programs have been drastically reduced or eliminated, and many of the faculty that taught this subject are retired. This same expertise, especially that of nuclear chemical engineers, will be in demand by organizations performing fuel recycle R&D, designing and operating recycle facilities, and regulating recycle facilities thus exacerbating the demand for this very limited expertise base.

C. Potential international issues

The GNEP's goals include having once-through and recycle facilities in the U.S. providing services (fuel supply, fuel take-back) as a primary component. The relationship that must be established among the various countries is not yet clear. However, with substantial amounts of U.S. fuel having to go to many other countries and being returned to the U.S., there is the possibility that a more focused interaction between the NRC and regulators in other countries might be needed to ensure that U.S. fuels are acceptable internationally and that fuel irradiated another country has an acceptable pedigree for its return.

D. Interface between NRC and DOE regulatory authorities

The DOE regulates most of its activities under its own authority while the NRC regulates licensees doing civilian and commercial nuclear activities. Decisions on whether a particular facility having significant DOE involvement or funding is regulated by DOE or NRC, especially if it is a relatively unique facility, is often done on a case-by-case basis. In the case of the projected fuel recycle facilities there is the potential for a patchwork of regulations, with DOE regulating some facilities that interface with other NRC-regulated facilities (e.g., a fuel refabrication plant and waste management facilities for same). This could pose challenges concerning compatibility and consistency of regulatory requirements, and in evaluating safety especially as it concerns material that moves between facilities, and how it is moved.

This scenario is occurring at the MFFP at SRS but it could be much more complex for a reprocessing plant with its myriad wastes and recycle streams.

Even for activities regulated under DOE's authority, the design and operation of such facilities provides an excellent opportunity to educate and train NRC staff for licensing subsequent facilities and to obtain insights useful in developing or modifying NRC regulations to license future commercial facilities. Of particular note is a stepwise end-to-end demonstration of the UREX+1a flowsheet now underway at ORNL [Binder, 2007] beginning with SNF receipt and ending with fabrication of fuels containing TRU elements and use of waste materials (e.g., Tc, Cs/Sr) to develop treatment processes.

REFERENCES

General

Proceedings of the First United Nations International Conference on the Peaceful Uses of Atomic Energy, United Nations publication, Geneva, Switzerland, August 1955.

Proceedings of the Second United Nations International Conference on the Peaceful Uses of Nuclear Energy, United Nations publication, Geneva, Switzerland, 1958.

"Nuclear Chemical Engineering," M. Benedict and T. Pigford, McGraw-Hill, 1957.

"Chemical Aspects of the Nuclear Fuel Cycle: A Special Issue," Radiochimica Acta, Vol. 25, No. 3/4, 1978.

"Recent advances in reprocessing of irradiated fuel: Nuclear Engineering – part XX, Chemical Engineering Progress Symposium Series, 94, Vol. 65, 1969.

"Engineering for Nuclear Fuel Reprocessing," Justin T. Long, American Nuclear Society, 1978.

"Light Water Reactor Nuclear Fuel Cycle," Eds. Raymond G. Wymer and Benedict L. Vondra, CRC Press, Inc., 1981.

"Aqueous Reprocessing Chemistry for Irradiated Fuels," Brussels Symposium, OECD European Nuclear Energy Agency, 1963.

NPT Article IV: Peaceful Uses of Nuclear Energy, Statement to the 2005 Review Conference of the Treaty on the Non-proliferation of Nuclear Weapons, by Christopher Ford, Principal Deputy Assistant, Bureau of Verification and Compliance**,** New York, New York, May 18, 2005.

"Status and Assessment Report on Actinide and Fission Product Partitioning and Transmutation", OECD Nuclear Energy Agency (May 1999).

Specific

ACNW&M (2002). Advisory Committee on Nuclear Waste and Materials. Letter from George M. Hornberger, ACRS Chairman, to Richard A. Meserve, Chairman USNRC, Subject: Risk-Informed Activities in the Office of NucleaML072820458r Material Safety and Safeguards (January 14).

ACNW&M (2006). ACNW&M letter dated May 2, 2006, from Michael T. Ryan, Chairman, ACNW&M to Nils J. Diaz, Chairman USNRC, Subject: Risk-Informed Decision-Making for Nuclear Materials and Wastes.

ACNW&M (2007). NRC/ACNW&M May 2007 meeting transcript.

Albenesius (1983). Albenesius, E. L., "Tritium Waste Disposal Technology in the U.S.," presented at the DOE/CEA Meeting on Defense Waste Management; November 9, 1983, Knoxville, TN, DP-MS-83-114 (CONF-8311105-2) (January)

ANL (1983). "Compatibilities of Technologies with Regulations in the Waste Management of H-3, I-129, C-14, and Kr-85, Part II, Analysis," L. E. Trevorrow et al., ANL-83-57, Part II, November 1983.

AREVA (2007). AREVA NC. "Monitoring results," tables updated monthly on the AREVA web site http:www.cogemalahague.com.

ASTM (2007). American Society for Testing and Materials. *Standard Specifications for Nuclear-Grade Uranyl Nitrate Solutions or Crystals,* C 288-03.

Azizova (2005). "Multi-organ Involvement and Failure in Selected Accident Cases with Acute Radiation Syndrome Observed at the Mayak Nuclear Facility," T V Azizova, N G Semenikhina, and M B Druzhinina, British Journal of Radiology (2005) Supplement_27, 30-35, 2005 British Institute of Radiology, 2005.

Behran (2000). "The Challenges to Nuclear Power in the Twenty-First Century," edited by Behran N. Kursunoglu, Stephen L. Mintz, and Arnold Perlmutter, published by Kluwer Academic/Plenum Publishers, New York, 2000.

Bibler (2002). Bibler, N. E. and T. L. Fillinger, *DWPF Vitrification – Characterization of the Radioactive Glass Being Produced During Immobilization of the Second Batch of HLW Sludge*, WSRC-MS-2000-00533.

Binder (2007). Binder, J. L., "The GNEP Spent Fuel Recycle Coupled End-to-End Demonstration," presentation to the National Academy of Sciences (July 17).

Boullis (2006). Bouliss, B., P. Barron, and B. Lorrain. "Progress in Partitioning: Activities in ALANTE," 9th Information exchange Meeting on Partitioning and Transmutation, OECD Nuclear Energy Agency (September 25-29).

Bouchard (2005). "The Closed Fuel Cycle and Non-Proliferation Issues," Jacques Bouchard,

Global 2005, Tsukuba, October 11, 2005.

Cazalet (2006). J. Cazalet, CEA. "Future Nuclear Cycle Systems and Technology Enhancing Proliferation Resistance," presentation in Panel 3 of the Nuclear Non-Proliferation Science and Technology Forum, Tokyo, Japan (May 18-19).

CCD-PEG (2003). "Development of a Cobalt Dicarbollide/Polyethylene Glycol Solvent Extraction Process for Separation of Cesium and Strontium to Support Advanced Aqueous Reprocessing," Law, J. D. , Herbst, R. S., Peterman, D. R., Tillotson, R. D., and Todd, T. A., Proceedings from Global 2003, November 2003.

CCD-PEG (2006). "Development of Cesium and Strontium Separation and Immobilization Technologies in Support of an Advanced Nuclear Fuel Cycle," J. D. Law et al., WM'06 Conference, February 26-March 2, 2006, Tucson, AZ, 2006.

CEA (2007). "Colloidal silver iodide characterization within the framework of nuclear spent fuel dissolution," O. Bernard-Mozziconacci, F. Devisme, J-L Merignier, and J. Belloni, corresponding author e-mail address: fredric.devisme@cea.fr.

Choppin (1987). "Carbon-14 in the Palo Duro basin repository," G. R. Choppin, BMI/ONWI/C-10, January 1, 1987.

Congress (2002). U.S. Congress, *Making Appropriations for Energy and Water Development for the Fiscal Year Ending September 30, 2006, and for Other Purposes*, Report 109-275 to accompany H.R. 2419 (subsequently P.L. 109-103, 119 STAT 2247, November 19, 2005).

Croff (1976). Croff, A. G. *Evaluation of Options Relative Fixation and Disposal of* ^{14}C*-Contaminated* CO_2 *as* $CaCO_3$, ORNL/TM-5171, April 1976.

Croff (1978). Croff, A. G. et al. *Revised Uranium-Plutonium Cycle PWR and BWR Models for the ORIGEN Computer Code*, ORNL/TM-6051, September 1978.

Croff (1980). *ORIGEN2 – A Revised and Updated Version of the Oak Ridge Isotope Generation and Depletion Code*, ORNL-5621, July 1980.

Croff (2000). Croff, A. G. et al. *Assessment of Preferred Depleted Uranium Disposal Forms*, ORNL/TM-2000-161, June 2000.

Davidson, 2007. E-mail from Davidson, D., AREVA NC Inc. to J. H. Flack, NRC, Subject: "Additional Info on AREVA Reprocessing and Refabrication Operations" (August 1).

DelCul (2002). TRISO-Coated Fuel Processing to Support High-Temperature Gas-Cooled Reactors," G. D. DelCul, B. B. Spencer, C. W. Forsberg, E. D. Collins and W. S. Rickman, ORNL/TM-2002/156, September 2002.

DNFSB (2001). "Chemical Process Safety, HB-Line Phase II," Defense Nuclear Facilities Safety Board, Staff Issue Report, Memorandum for J. K. Fortenberry, 2001.

DNFSB (2003). "Control of Red Oil Explosions in Defense Nuclear Facilities," R. N. Robinson, D. M. Gutowski, W. Yeniscavitch, with assistance from J. Contardi, R. Daniels and T. L. Hunt, DNFSB/TECH-33, November 2003.

DOE (1986). U.S. Department of Energy, *Technology for Commercial Radioactive Waste Management*, DOE/ET-0028, May 1986.

DOE (2002). U.S. Department of Energy, *Final Environmental Impact Statement for a Geologic Repository for the Disposal of Spent Nuclear Fuel and High-Level Radioactive Waste at Yucca Mountain, Nye County, Nevada*, DOE/EIS-0250.

DOE (2005). U.S. Department of Energy, *Initial Single-Shell Tank System Performance Assessment for the Hanford Site*, DOE/ORP-2005-01.

DOE (2006a). U.S. Department of Energy, *Report to Congress: Spent Nuclear Fuel Recycling Program Plan* (May).

DOE (2006b). U.S. Department of Energy, "Notice of Request for Expressions of Interest in a Consolidated Fuel Treatment Center to Support the Global Nuclear Energy Partnership," 71 Fed Reg 151 44676-44679 (August 7).

DOE (2007). U.S. Department of Energy. "Notice of Intent to Prepare a Programmatic Environmental Impact Statement for the Global Nuclear Energy Partnership," 72 FR 331 (January 4).

EIA (2004). U.S. Energy Information Agency. "U.S. Spent Nuclear Fuel Data as of December 31, 2002", www.eia.doe.gov (October).

EPRI (2003). Electric Power Research Institute. "Scientific and Technical Priorities at Yucca Mountain," EPRI Report 1003335 (December).

Ganguly (1997)."Sol-gel microsphere pelletization process for fabrication of $(U,Pu)O_2$, (U,Pu)C and (U,Pu)N Fuel pellets for the prototype fast breeder reactor in India," Ganguly, C., Journal of Sol-Gel Science and Technology, Vol. 9, No. 3, pp. 285-294.

GNEP (2007a). *Global Nuclear Energy Partnership Strategic Plan,* Office of Fuel Cycle Management, GNEP-167312 (January).

GNEP (2007b). *Global Nuclear Energy Partnership Technology Development Plan*, Global Nuclear Energy Partnership Technology Integration Office, GNEP-TECH-TR-PP-2007-00020 (July 25).

GOODE (1973a). *Voloxidation: Removal of Volatile Fission Products from Spent LMFBR Fuels,* ORNL/TM- 3723.

Goode (1973b). Goode, J. D. (Compiler). *Voloxidation – Removal of Volatile Fission Products from Spent LMFBR Fuels*, ORNL/TM-3723, May 1973.

Hore-Lacey (2007). *Decommissioning nuclear facilities,* The Encyclopedia of Earth, by Ian Hore-Lacey, January 30, 2007.

IAEA (1980). International Atomic Energy Agency. "Separation, Storage, and Disposal of Krypton-85," Technical Report Series No. 199.

IAEA (1987). International Atomic Energy Agency. "Treatment, Conditioning, and Disposal of Iodine-129," Technical Report Series No. 276.

IAEA (2001). International Atomic Energy Agency. The International Nuclear Event Scale (INES) User's Manual, IAEA-INES-2001 (February).

IAEA (2003a). International Atomic Energy Agency. *Status and Advances in MOX Fuel Technology*, Technical Report Series No. 415, IAEA, 2003.

IAEA (2003b). International Atomic Energy Agency. *Guidance for the evaluation of innovative nuclear reactors and fuel cycles*, IAEA-TECDOC-1362 (June).

IAEA (2004). International Atomic Energy Agency. "Management of Waste Containing Tritium and Carbon-14," Technical Report Series No. 421.

IAEA (2006). "Characterization, Treatment and Conditioning of Radioactive Graphite from Decommissioning of Nuclear Reactors," IAEA-TECDOC-1521, September 2006.

IAEA (2007a). "Management of Reprocessed Uranium: Current Status and Future Prospects" IAEA-TECDOC-1529, February 2007 (See Appendix V for reprocessed UO_3 specifications.)

IAEA (2007b). International Atomic Energy Agency. Press release "Improving the INES Scale," http://www.iaea.org/NewsCenter/News/2007/ines.html (September 20).

INFCE (1980). International Nuclear Fuel Cycle Evaluation, *Reprocessing, Plutonium Handling, Recycle (sic): Report of Working Group 4*, INFCE/PC/2/4.

ISIS (2007). *"Shipments of Weapons-Usable Plutonium in the Commercial Nuclear Industry,"* by David Albright, The Institute for Science and International Security (ISIS), January 3, 2007.

Jantzen (2002). Jantzen, C. M. *Engineering Study of the Hanford Low-Activity Waste Steam Reforming Process*, WSRC-TR-2002-00317, July 2002.

Jantzen (2004). Jantzen, C. M., A. D. Cozzi, and N. E. Bibler, *High-Level Waste Processing Experience with Increased Waste Loadings*, WSC-TR-2004-00286.

Kee (1976). Kee, C. W., A. G. Croff, and J. O. Blomeke, *Updated Projections of Radioactive Waste to be Generated by the U.S Power Industry*, ORNL/TM-5427, December 1976.

Kessler (2006). Kessler, J.H., "Preliminary Analysis of the Maximum Disposal Capacity for CNSF in a Yucca Mountain Repository," presentation given to the ACNW&M (April 19).

Kitamura (1999). "Japan's Plutonium Program: A Proliferation Threat?" Motoya Kitamura, Non-Proliferation Review, Winter 1999, p 8.

Kouts (2007). Kouts, C. "Transportation, Aging, and Disposal (TAD) Canister System Status and Total System Model (TSM)," presentation to the Advisory Committee on Nuclear Waste and Materials, (June 19).

Laidler (2006). "The Global Nuclear Energy Partnership: Advanced Separations Technology Development," presentation to the Advisory Committee on Nuclear Waste, ML062090258 (July 20).

Loewen (2007). Loewen, E. P. *Advanced Reactors: NUREG-1368 Applicability to Global Nuclear Energy Partnership*, presentation at the 19th Annual Regulatory Information Conference (RIC), March 13-15, 2007.

McGrail (2003). McGrail, B. P. et al. *Initial Suitability Evaluation of Steam-Reformed Low-Activity Waste for Direct Land Disposal*, PNWD-3288, January 2003.

MOU (2002). MOU letter signed by Christine T. Whitman, USEPA Administrator and Richard

A. Meserve, Chairman, USNRC, September-October, 2002.

NAS (2000). National Academy of Sciences. *Electrometallurgical Techniques for DOE Spent Fuel Treatment: Final Report*.

NEA (2004). *Pyrochemical Separations in Nuclear Applications: A Status Report*, ISBN 92-64-02071-3, OECD 2004, NEA No. 5427, 2004.

NEA (2006). Nuclear Energy Agency, Organization for Economic Cooperation and Development. *Advanced Nuclear Fuel Cycles and Radioactive Waste Management*, NEA Report No. 5990.

NEA (1999). "Evaluation of Speciation Technology," Workshop Proceedings, Tokai-mura, Ibaraki, Japan, NEA, OECD, 26-28 October 1999.

NEI (2007). Nuclear Energy Institute. Web site at http:www.nei.org/resourcesandstats/nuclearstatistics/usnuclearpowerplants/.

NEP (2001). National Energy Policy: Report of the National Energy Policy Development Group, May 16, 2001.

NERAC (2002). DOE Nuclear Energy Research Advisory Committee. *A Technology Roadmap for Generation IV Nuclear Energy Systems*, GIF-002-00 (December).

NNI (1997). NNI-No Nukes Infosource, a publication of the Austrian Institute for Applied Ecology, March 11, 1997.

NUREG (2007). NUREG-1757, Vol. 1, Rev. 2; Vol. 2, Rev. 1; and Vol. 3., February 3, 2007.

NRC (1976). U.S. Nuclear Regulatory Commission. *Final Generic Environmental Impact Statement on the Use of Recycle Plutonium in Mixed-Oxide Fuel in Light-Water Cooled Reactors: Health, Safety, and Environment*, NUREG-0002 (August).

NRC (1981). U.S. Nuclear Regulatory Commission. Draft Environmental Impact Statement on 10 CFR Part 61, "Licensing Requirements for Land Disposal of Radioactive Waste," NUREG-0782.

NRC (1995). U.S. Nuclear Regulatory Commission. *Use of Probabilistic Risk Assessment Methods in Nuclear Regulatory Activities; Final Policy Statement*, Fed Reg 60, 42622 (August

16).

NRC (2005). U.S. Nuclear Regulatory Commission. Memorandum and Order from P. L. Vietti-Cook, USNRC, in the matter of Louisiana Energy Services, L.P. (National Enrichment Facility), CLI-05-20 (October 19).

NRC (2006a). Memorandum from P.L. Vietti-Cook, U.S. Nuclear Regulatory Commission, to M.T. Ryan, Advisory Committee on Nuclear Waste, "Staff Requirements – COMSECY-05-0064 – Fiscal Year 2006 and 2007 Action Plan for the ACNW&M " (February 7).

NRC (2006b). Memorandum from P.L. Vietti-Cook, U.S. Nuclear Regulatory Commission, to M.T. Ryan, Advisory Committee on Nuclear Waste, "Staff Requirements – SECY-06-0066 – Regulatory and Resource Implications of a Department of Energy Spent Nuclear Fuel Recycling Program" (May 16).

NRC (2006c). COMSECY-05-0064 SRM, Fiscal Year 2006 and 2007 Action Plan, February 7, 2006.

NRC (2007a). U.S. Nuclear Regulatory Commission. Staff paper "Regulatory Options for Licensing Facilities Associated with the Global Nuclear Energy Partnership", SECY-07-0081 (May 15).

NRC (2007b). U.S. Nuclear Regulatory Commission. "Staff Requirements - Secy-07-0081 - Regulatory Options for Licensing Facilities Associated with the Global Nuclear Energy Partnership (GNEP)," SRM-SP07-0081 (June 27).

OECD (2006). *Criteria Derived for Geologic Disposal Concepts*, by Ronald A. Wigeland, OECD/NEA 9th Information Exchange Meeting on Actinide and Fission Product Partitioning and Transmutation, Nimes, France, September 28, 2006.

ORNL (2007). "Preliminary Multicycle Transuranic Actinide Partitioning-Transmutation Studies," ORNL/TM-2007/24, Collins, E.D., DelCul, G.D., Renier, J.P., Spencer, B.B., February 2007.

Pahl (1990). "*Experimental studies of U-Pu-Zr fast reactor fuel pins in the experimental breeder reactor-II,"* Pahl, R. G., D. L. Porter, C.E. Lahm and G. L. Hoffman, Metallurgical and Materials Transactions A, Vol. 21, Number 7, pp. 1863-1870, July 1990,

Pasamehmetoglu (2006). Pasamehmetoglu, K. O. AFCI Fuels Development National Technical Director, Idaho National Laboratory, presentation to the ACNW&M (July 20).

Phillips (2007). Phillips, C., EnergySolutions, e-mail communication to the ACNW&M consultants, Rev. 1 (July 25).

RSC (2006). "Nuclear Waste in France: Current and Future Practice," by Dr. Etienne Y. Vernaz Presented in the RSC Environment, Sustainability and Energy Forum, Materials for Nuclear Waste Management (January 18).

Schneider (2001). Schneider, M. , Coeytaux, X., Faid, Y.B., Marigac, Y., Rouy, E., Thompson, G., Fairlie, I., Lowry, D., Sumner, D., " Possible Toxic Effects from the Nuclear Processing Plants at Sellafield at Cap de La Hague," European Parliament, Directorate General for Research, STOA Program. EP/IV/A/STOA/, Nov., 2001.

Sellafield (2005). Sellafield - Decommissioning & Termination Category Summary, 35.13, 2005.

TRUEX (1998). Innovative Technology Summary Report, "TRUEX/SREX Demonstration," DOE/EM-0419, December 1998.

TALSPEAK (1964). "A New Method of Separating Americium and Curium from the Lanthanides by Extraction from an Aqueous Solution of an Aminopolyacetic Acid Complex with a Monoacidic Organophosphate or Phosphonate," Weaver, B., Kappelmann, F.A., ORNL-3559, August 1964.

TALSPEAK (1999). "Solvent Extraction Separations of Trivalent Lanthanide and Actinide Ions Using an Aqueous Aminomethanediphosphonic Acid," Jensen, M. P. and Nash, K. L., Proceedings of ISEC '99, International Solvent Extraction Conference, July 11-16, 1999.

THORP (1984). *The Behavior of Technetium in a Nuclear Fuel Reprocessing Plant*, J. Garraway, I. Chem. E. Symposium Series No. 88, Extraction 84 Conference, Dounreay, Scotland, 1984

THORP (1990a). "The Development of a Three Cycle Chemical Flowsheet to Reprocess Oxide Fuel," I. S. Denniss, C. Phillips, Proc. International Solvent Extraction Conference (ISEC), Kyoto, Japan, 16-21 July 1990, Paper 04-02

THORP (1990b). "The Development of a Flowsheet to Separate Uranium and Plutonium in Irradiated Oxide Fuel," I. S. Denniss, C. Phillips, Proc International Conference *Extraction 90*, Dounreay, Scotland, 10-14 September 1990. Published as I. Chem. E. Symposium Series No. 119, pp 187-197, 1990.

THORP (1992). "Uranium-Plutonium Separation by Pulsed Column in the First Cycle of the Three Cycle Thermal Oxide Reprocessing Plant," C.Phillips, Waste Management 92,

International Conference, University of Arizona, Tucson, USA, March 1-5, 1992

THORP (1993). *Development and Design of the Thermal Oxide Reprocessing Plant at Sellafield*, C.Phillips, Trans I. Chem. E., Vol 71, Part A, March 1993

THORP (1999a). "The Thermal Oxide Reprocessing Plant at Sellafield: Four Years of Active Operation of the Solvent Extraction Plant," C.Phillips, International Solvent Extraction Conference (ISEC) 99, University of Bellaterra (Barcelona), Spain, July 11-16 1999.

THORP (1999b). "The Thermal Oxide Reprocessing Plant at Sellafield: Four Years of Successful Treatment of Irradiated Nuclear Fuel," C.Phillips, Waste Management 99, International Conference, University of Arizona, Tucson, USA, February 28 - March 5 1999.

THORP (2000). "Reprocessing as a Waste Management and Fuel Recycling Option: Experience at Sellafield," Chris Phillips and Andrew Milliken, Waste Management 2000, University of Arizona, Tucson, AR, USA, February 27 to March 2, 2000.

THORP (2006). "The Thermal Oxide Reprocessing Plant at Sellafield – Lessons Learned from 10 Years of Hot Operations and their Applicability to the DOE Environmental Management Program," Chris Burrows, Chris Phillips, Andrew Milliken, Waste Management 06 Conference, Tucson, AZ, U.S.A., February 26 to March 2, 2006.

West Valley (1981). For comprehensive information on the operations at the West Valley Plant see "Review of the Operating History of the Nuclear Fuel Service, Inc., West Valley, New York Irradiated Fuel Processing Plant," ORNL/Sub-81/31066/1, September 1981.

Wigeland (2007). R. Wigeland, Idaho National Laboratory, "Global Nuclear Energy Partnership: Waste Streams and Disposition Options," presentation to the National Academy of Sciences (April 4).

Wickham (1999). "The Uncertain Future for Nuclear Graphite Disposal: Crisis or Opportunity?", A. J. Wickham, G. B. Neighbour, M Duboug, IAEA Technical Committee Meeting on "Nuclear Graphite Waste Management," TCM-Manchester99, pp. 13-28, October 18-20, 1999.

WNA (2006). World Nuclear Symposium. Annual Symposium 2006, London, England, remarks attributed to Sergei Kireinko by RIA Novosti (September 7).

Wymer (1992). "An Assessment of the Proliferation Potential and International Implications of the Integral Fast Reactor," R. G. Wymer, H. D. Bengelsdorf, G. R. Choppin, M. S. Coops, J Guon, K. K. S. Pillay, and J. D. Williams, K/ITP-511, May 1992.

GLOSSARY

A

aerosol - a suspension of fine particles in a gas

actinides - chemical elements with atomic numbers between 90 and 103

assay and accountability - analysis of a material and formally accounting for amounts of it

automation technology - technology to make things with reduced amounts of human intervention

B

batch dissolver - equipment used to dissolve material in batches rather than continuously

becquerel - one radioactive disintegration per second

biosphere - the surface region of the earth in which life can exist

bismuth phosphate process - separation process to recover plutonium from irradiated fuel by precipitating it using bismuth phosphate

blanket - regions surrounding the fissile core of a reactor for capturing neutrons in fertile material

blanket element - a unit (fuel rod) in the reactor blanket

boiling water reactor - a reactor in which the coolant water is permitted to boil

borosilicate glass - a type of glass containing the element boron in addition to other glass formers

breeding ratio - the ratio of the number of fissile atoms produced to the number of fissile atoms consumed

C

centrifugal contactor - a separation device in which two liquids are mixed in a rotating cylinder and then separated

centrifuge - a device in which solids are separated from liquid by rapid rotation

ceramic - a hard, non-metallic, inorganic material

chemical conversion process - a process in which material is converted from one chemical form to another

cladding hulls - pieces of the outer protective coating of nuclear fuel

climatic inversions - a weather condition in which the normal atmospheric layers are reversed in position

complex - as used in this paper a chemical combination of two or more chemical species joined electrostatically to form a stable chemical entity

control rod - a rod containing isotopes of a neutron capturing element used to control reactor reactivity

criticality - a condition wherein sufficient fissile material is present to sustain a nuclear chain reaction

crud - an undesirable solid material of undefined composition

D

decay heat - heat produced by the radioactive decay of radioisotopes

decontamination - the process whereby material is cleaned by removing contaminants

denitrator - a piece of equipment in which a chemical nitrate is decomposed

deterministic - a regulatory approach to establishing goals that is based on analysis of what can go wrong and its consequences but not the probability

double-shell tank - a radioactive waste tank comprised of a container within a container

E

effluents - material entering the environment from process equipment or a facility

electrochemistry - the relation of electricity to chemical changes using interconversion of chemical and electrical energy

electrometallurgical process - a process using electricity to produce metal

electrorefiner - a piece of equipment that uses electricity to separate and purify metals

environmental impact statement - a legally required document that presents and discusses the environmental and other effects of alternatives to building, modifying and otherwise altering an existing facility or situation

equivalent enrichment - fissile characteristics of material calculated as though it behaved as if it were all enriched uranium

exothermic reaction - a chemical reaction that produces heat

extractable - the capability of being removed, typically from a liquid or gas stream

F

fast reactor- a nuclear reactor that does not significantly slow down the fission neutrons

fissile material - a substance that can undergo nuclear fission

fission products - elements produced when a fissile material fissions

flowsheet - a diagram that shows the step-by-step movement of mass or energy using lines and conventional symbols

fuel assembly - a collection of fuel rods in a well-defined arrangement

G

gas-cooled fast reactor - a fast reactor in which the fission neutrons are not slowed and the coolant is a gas such as helium

glove box - an enclosed container not having substantial radiation shielding whose off-gas is

treated in which an operator can handle material using attached gloves

graphite - a soft, solid, lustrous form of carbon that conducts electricity

groundwater- water that travels through the earth below its surface

H

head end - the first steps in fuel reprocessing preceding solvent extraction, including fuel shearing and dissolving

heat exchanger - a device in which heat is transferred from one fluid to another without mixing the fluids

high-temperature gas-cooled reactor - a reactor capable of operating at high temperatures and cooled with a gas and whose core and moderator are made of graphite

hydrocyclone- a device in which a fluid is caused to rotate for the separation of solid material it contains

I

isotope - one of the two or more of atoms of an element having the same atomic number but different mass numbers

K

kernel - the essential central part of a substance, e.g., the fuel-containing portion of a microsphere

L

lanthanide element - an element whose atomic number is greater than 57 and less than 72

lead-cooled fast reactor - a reactor whose neutrons are not slowed by a moderator and whose coolant is molten lead

light water reactor - a reactor that uses ordinary water as neutron moderator and as coolant

M

mass number - an integer that is the sum of the number of protons and neutrons in an atom's nucleus

materials test reactor - a reactor whose primary purpose is to perform irradiation tests on materials typically using aluminum-clad fuel

microsphere - as used in the report a very small sphere (~ 1 mm diam) containing a fissile material kernel and several spherical layers of graphite and one of silicon carbide

moderator - a material used in reactors to slow down the neutrons produced in fission

molten salt reactor - a type of reactor whose fuel is a molten salt that circulates in a loop in which it is processed

millisievert - one one-thousandth of a sievert

mixer-settler - a device used in separations in which immiscible fluids are mixed and allowed to separate by gravity

N

neutron absorption cross section - a measure of the probability of a material absorbing a neutron

neutron irradiation - exposure to a flux of neutrons

neutron poison - a material that has a high neutron capture cross section

noble metal - a relatively chemically inert metal, typically having an atomic number of 42 to 46 and 74 to 78

nominal capacity - an assumed or approximately correct capacity

nuclear fuel cycles - the flow of nuclear material from various operations from mining to waste disposal

nuclear fuel recycling center - a site at which more than one of the fuel recycle operations are carried out

O

off-gas - gases and vapors released from equipment, processes, or buildings

P

pellet-cladding interaction - physical contact at the interface between a fuel pellet and its cladding

performance-based - a requirement that is based on meeting a specified goal that does not specify the means of meeting that goal

permselective membrane - a thin layer of a solid substance that is selectively permeable to one or more materials

precipitate verb - the act of forming a solid that settles out of a liquid

precipitate noun - the material formed during precipitation

precipitation - the process of forming a precipitate

pressurized water reactor - a reactor that prevents water from boiling at temperatures above its normal boiling point by the application of pressure

probabilistic risk assessment - evaluation of risk incorporating probabilities of something occurring

production reactor - a reactor whose primary function is to produce plutonium or tritium

proliferation - as used in this paper the undesirable spread of fissile material and/or technology used to produce nuclear weapons

pulse column - a vertical cylinder containing solids to disperse and contact two counter-currently or co-currently flowing liquids

pyrolytic graphite - a type of crystalline carbon formed by decomposing organic compounds at high temperatures

pyrolyzed carbon - the amorphous product of decomposition at high temperatures of organic material

pyroprocessing - the act of processing at high temperatures

R

radiation background - the level of radiation found normally in the environment or in a facility containing sources of radiation

radiation dose - the amount of radiation absorbed

radiation shielding - material that diminishes the flux of radiation

radioelement - a element containing radionuclides

radiological hazard - a device or material whose radiation poses a hazard

radionuclide - a radioactive isotope

raffinate - the phase remaining (typically aqueous) after extraction of some specified solute(s) by a solvent (typically organic)

rare earth - synonymous with lanthanide

red oil - a potentially explosive liquid of ill-defined composition formed by the reaction of heat and/or radiation with organic liquids

redox process - an early solvent extraction plutonium separation process employing methyl isobutyl ketone as extractant

reducing agent - as used in this paper a chemical capable of chemically reducing another chemical

re-enriched - as used in this report uranium that is isotopically enriched after having been initially enriched, depleted by neutron irradiation, and recovered by reprocessing

refabrication - fuel element fabrication of material recovered in reprocessing

rem - dosage of ionizing radiation that causes the same biological effect as exposure to x-rays or gamma rays that produce one electrostatic unit of charge of either sign in one cubic centimeter of dry air at 0° C and one atmosphere of pressure; ~100 ergs per gram

remote decontamination - cleaning up equipment or facilities without direct contact by operating personnel

remote maintenance -maintaining equipment or facilities without direct contact by operating personnel

repository - as used in this paper a deep geologic facility in which wastes are disposed of

reprocessing - separation of spent nuclear fuel into its constituent components, typically to recover fissile and fertile material

risk-informed - a philosophy whereby risk insights are considered together with other factors to establish requirements that better focus licensee and regulatory attention on design and operational issues commensurate with their importance to public health and safety

robotics - technology dealing with the design, construction and operation of robots in process automation

S

scrub - as it is used in this report the act of removing undesired material by contacting an aqueous stream with an organic product-containing stream

self-protecting - an arbitrary classification of protection derived from the radiation dose associated with irradiated spent commercial fuel, generally taken to be the protection afforded by a dose rate of 100 R/hr

separation factor - the concentration of the species of interest in the feed to one step of a separation process divided by its concentration in the product of that stage

sievert - The SI unit of absorbed dose equivalent (1 Joule/Kilogram or 100 rems)

single-shell tank - a radioactive waste tank comprised of only one container

sintering - a process, usually at high temperature, that causes particles of a material to bond into a coherent mass without melting

sludge - an un-characterized, non-crystalline, mud-like solid material

sol-gel process - a process for producing solids by forming a gel from a colloid

sodium-cooled fast reactor - a reactor whose fission neutrons are not slowed and that is cooled with liquid sodium

solvent extraction - a process wherein a dissolved material is transferred between two contacted immiscible liquids

spent nuclear fuel dissolution - the act of dissolving spent fuel, usually by action of an acid

spent nuclear fuel shearing - the act of cutting fuel elements into pieces to expose the contained fuel material

steam stripping - a process wherein unwanted material is removed from a liquid by passing steam through the liquid

stoichiometry - the numeric relationship of the number of atoms in a chemical compound

stripping - as used in this report removal of extraneous or contaminating material from a solvent, usually by contacting it with water or dilute acid

supercritical-water-cooled reactor - a water-cooled reactor in which the water is above its critical point

supernatant liquid - the layer of clear liquid overlaying a solid such as a sludge

surge capacity - accommodation for storing material awaiting the next step in a process or operation

T

terabecquerel - 1012 disintegrations per second

thermal neutron spectrum - the range and distribution of neutron energies consistent with the range and distribution of energies of molecules in a gas at room temperature

thorium-uranium fuel cycle - a fuel cycle based on thorium and 233U

transmutation - as used in this report a process by which one isotope is converted to one or more different isotopes by neutron capture or fission

transuranic actinide isotopes - isotopes whose atomic numbers are greater than 92 and less than

104

tributyl phosphate - an organic compound commonly used in the separation of desired radionuclides, specifically U and Pu, from unwanted radionuclides, e.g., fission products

TRISO fuel particle - a small fissile fuel particle comprised of a fuel kernel and spherical layers of pyrolytically deposited carbon and silicon carbide

U

uncertainty analysis -quantification of the uncertainty in the predication of models.

uranium-plutonium fuel cycle - a fuel cycle based on U and Pu

V

vacuum distillation - evaporation of a material at less than atmospheric pressure

valence - a measure of the combining power and ratio of one element or chemical species with another, usually expressed as a small positive or negative integer

very-high-temperature reactor - a reactor that operates at temperatures much above that of light water reactors

voloxidation - a sequence of oxidation and reduction reactions using air or oxygen and heat to pulverizes an oxide fuel

vitrification - production of a glass or glassy substance, commonly used to prepare a high-level waste form

W

water scrubber - a device that employs water to remove impurities from a fluid by intimate contact with the fluid

Z

zeolite - a crystalline silicate whose internal cavities are large enough to accommodate atoms and small molecules that is commonly used in separations, especially of gases

Zircaloy cladding - an alloy, primarily of zirconium alloyed with minor elements such as tin, used in the form of tubes to contain fuel pellets

APPENDIX A: Description of the Purex Process in the Barnwell Nuclear Fuel Plant

Reprocessing of spent nuclear fuel, including the PUREX process, is described in some detail below based on the last attempt to build and operate a reprocessing plant (BNFP) in the U.S. It should be recognized that many changes and improvements have been made since the mid-1970s when the BNFP was under construction. The following description is provided to illustrate the state of the art in reprocessing at that time. In general, the principle process steps are the same today as they were then.

Spent Fuel Receiving and Storage

The irradiated fuel assemblies would arrive at the reprocessing plant on a carrier in shielded casks. The cask and carrier would be monitored for external contamination and washed to remove external dirt. After the cask had been removed from the carrier, the condition of the fuel and cask would be determined. The cask would be vented, cooled, and prepared for entry into the cask unloading pool. The cooled cask would be moved by the cask handling crane to the cask unloading pool, where it would be lowered to the bottom of the pool. The top of the cask would be opened and the contained fuel would be removed. The identity of each fuel assembly would be established and compared against shipping documentation. The fuel would be placed in storage canisters, which would be moved to the fuel storage pool for retention until the fuel was scheduled for reprocessing. All operations would be performed under water.

Spent Fuel Inventory

A typical 1,500 MTU/year reprocessing/recycling facility will generally have a spent fuel storage capacity of approximately 2,000 fuel elements, which, depending on the burnup, will represent approximately one-fourth of the annual plant capacity (e.g., the BNFP could store 360 MTU at any one time). Initial BNFP specifications for spent fuel in the mid-70s are shown in Table A1.

Table A1 Spent nuclear fuel specifications circa the mid-1970s

Characteristic	Value
Burnup, maximum	40,000 Mwd/MTU
Specific power, maximum	50 Mw/MTU
Enrichment	Initial: 3.5 - 5.0% U-235 or equivalent
	Final: 1.9 - 3.5% U-235 + Pu content
Plutonium yield, total	10 Kg Pu/MTU
Age of spent fuel, as shipped	90-day cooled, minimum
Age of spent fuel at start of reprocessing	90-day cooled, minimum
Cladding	Zircaloy or stainless steel
Maximum dimensions	11-3/8” sq. by 20’ long

At the current time, however, initial feed spent fuel will be aged for years (some for as many as 40 years) since the fuel continues to be stored by the electric utilities.

Shearing and Dissolving

An individual spent fuel assembly container would be remotely transferred from the storage pool and the individual fuel assemblies would be removed and moved to the feed mechanism of the mechanical shear. Generally, a full batch or a lot of fuel from a single source would be processed at a time. The fuel assemblies would be chopped into small segments (approximately 2" to 5" long) to expose the fuel to the nitric acid dissolver solution.

The chopped fuel assemblies would fall into one of three dissolvers that contain hot 3 M HNO_3 to dissolve virtually all uranium, plutonium, other actinides, and most of the fission products. During dissolution, a soluble neutron poison (gadolinium nitrate) would be added to the dissolver as a precaution to prevent a criticality. After the initial dissolution, a digestion cycle would be used (8 M HNO_3) to dissolve any remaining fuel (plutonium oxide is sometimes refractory and requires more aggressive dissolution conditions). Following digestion in nitric acid any remaining insoluble material would be rinsed with dilute nitric acid and these materials plus the undissolved cladding hulls of stainless steel or Zircaloy would remain in the dissolver basket. Gases released from the spent fuel during dissolution (primarily ^{85}Kr, tritium, ^{129}I and $^{14}CO_2$ with the possibility of some $^{106}RuO_4$) and nitrogen oxides would be directed to the off-gas treatment system to remove particulates, radioiodine, and nitrogen oxides. The cladding hulls would be rinsed, monitored for fissile material, packaged, and transferred to the solid waste storage area. The nitrogen oxides would be reconstituted to nitric acid.

Product Separation and Purification

After acidity and concentration adjustment the dissolver solution would become the solvent extraction process feed solution. It would be clarified by centrifugation, and then sent to the first solvent extraction decontamination cycle. In this cycle, the feed solution is contacted counter-currently in a ten-stage centrifugal contactor with an organic solution of 30% tributyl phosphate (TBP) in a kerosene or normal paraffin hydrocarbon diluent (primarily dodecane). The organic solution preferentially would extract the tetravalent plutonium and hexavalent uranium, leaving about 99% of the fission products in the aqueous raffinate (waste) nitric acid solution. The organic solution from the centrifugal contactor then would pass through a pulsed scrub column where aqueous 3 M HNO_3 solution scrubs (back-extracts) about 96% of the small amount of extracted fission products from the product-bearing organic solution. This scrub solution subsequently would be recycled to the centrifugal contactor for additional uranium and plutonium recovery to reduce the potential for product losses. The combined aqueous stream leaving the centrifugal contactor would contain approximately 99.6% (or more) of the fission products and would be sent to a HLW concentrator.

The organic solution from the scrub column (joined by organic raffinates from down-stream plutonium purification columns) would pass through a partitioning column where tetravalent plutonium would be electrochemically reduced[34] to the less extractable trivalent state. This would enable the plutonium to be stripped quantitatively into an aqueous nitric acid solution within the electrochemical unit. A substantial amount of uranium would follow the plutonium in

[34] Electrochemical reduction of plutonium was unique to the Barnwell plant. Plutonium is conventionally reduced chemically, often with U(IV).

the aqueous stream [some uranium is also electrolytically reduced from U(VI) to U(IV), and may in fact be the ultimate Pu reductant]. The aqueous stream, which is approximately 35% plutonium and 65% uranium, would flow to the plutonium purification cycles. The organic solution, now stripped of plutonium, would pass through another pulsed column where the residual uranium would be stripped into a weakly acidified aqueous solution (approximately 0.01 M HNO_3).

The aqueous strip solution containing the residual uranium would be concentrated by evaporation from 0.3 M uranium to 1.5 M uranium and adjusted with nitric acid to approximately 2.5 M HNO_3. This uranium would be preferentially extracted again by 30% TBP organic solution in another pulsed column. Before leaving the column, the organic solution would be scrubbed with dilute nitric acid solution, which would remove traces of extracted ruthenium and zirconium-niobium fission products, which are among the fission products most difficult to remove. Hydroxylamine nitrate or hydrazine also would be added to the scrub solution to remove residual plutonium by its chemical reduction to the inextractable trivalent state. Uranium subsequently would be stripped from the organic solution in another pulsed column, using an acidified aqueous solution (0.01 M HNO_3). This solution would be concentrated, by evaporation, from 0.4 M uranium to 1.5 M uranium. Finally, the concentrated aqueous uranium solution would be passed through silica gel beds to remove residual traces of zirconium-niobium fission products, and the uranyl nitrate product solution would be analyzed and transferred to the UF_6 facility for storage or conversion to UF_6 and subsequent shipment. Uranium recovery was expected to be at least 99 % . Removal of fission products was to be 99.99 %[35].

Plutonium in the aqueous stream leaving the partitioning column would be re-oxidized to the organic-extractable tetravalent state by sparging the solution with Di-nitrogen tetroxide (N_2O_4) and would be preferentially extracted into an organic solution in the first pulsed extraction column of the second plutonium cycle. In the top portion of this column, the organic stream would be scrubbed with 10 M HNO_3 solution to remove traces of extracted ruthenium and zirconium-niobium fission products. The organic stream then would pass through a strip column where tetravalent plutonium would be transferred to an aqueous stream of dilute (0.3 M) nitric acid. This cycle would also partition plutonium from the accompanying uranium, with the uranium being recycled. The extraction-scrubbing sequence would be repeated in a third plutonium cycle for further decontamination from fission products and uranium. To effect a higher plutonium product concentration, the plutonium would be reduced in the third-cycle strip column by hydroxylamine nitrate to the more hydrophilic trivalent state. A TBP organic scrub solution would be added to remove any residual uranium from the plutonium aqueous stream as it leaves the third-cycle strip column. Following the third plutonium cycle, the plutonium nitrate solution would be washed with a stream of organic diluent in a final column to remove traces of organic solvent (TBP). Final plutonium concentration would be established in a critically-safe-geometry evaporator made of titanium. The plutonium product solution would be analyzed and stored in critically safe tanks. The plutonium recovery was expected to be 98.75 %.

The contaminated organic solvent stream from the co-decontamination and partition cycles would be washed successively with dilute aqueous solutions of sodium carbonate, nitric acid, and sodium carbonate to remove organic degradation products (primarily dibutyl- and monobutyl phosphate) generated by radiation damage to TBP. This step would produce waste

[35] For actual operating experience at the THORP reprocessing plant see Sect. III.A.3

solids formed from the sodium salts and organic phosphates.

The precipitated solids would be removed by filtration following the first carbonate wash. Fresh TBP and/or diluent would be added, as required, to maintain the 30% TBP concentration and the total solvent inventory at the desired level. The contaminated organic solvent stream from the second uranium cycle would be treated similarly in a separate system, except that the second sodium carbonate wash would be omitted.

The aqueous raffinate streams from the plutonium and uranium cycles, except the last product-bearing raffinate, would be treated with N_2O_4 for adjustment of the plutonium oxidation state to Pu(IV) and U(VI) and would be passed through a pulse column where residual uranium and plutonium would be recovered by extraction into a 30% TBP organic solution. The recovered uranium and plutonium would be recycled back to the decontamination cycle for recovery. The aqueous raffinate stream would be concentrated in a low-activity process waste evaporator.

Liquid Waste Streams

The radioactive aqueous waste streams from all the solvent extraction cycles would be concentrated in the high- or low-activity waste evaporators, depending on the relative radioactivity content. The acidic concentrated HLLW bottoms would be stored in a cooled stainless steel waste tank. The evaporator overheads would be passed through a distillation column to recover the nitric acid as a 12 M solution. The distillation column overhead (primarily water) then would be recycled as process water, or sampled and released to the stack from a vaporizer provided it met release specifications. The recovered 12 M HNO_3 would be used in parts of the process where the residual radioactivity could be tolerated.

Miscellaneous aqueous streams containing salts and fission products (approximately 1 Ci/liter) but no appreciable uranium or plutonium would be acidified and concentrated to approximately 50 Ci/liter in the general purpose evaporator. These evaporator bottoms would be stored in an uncooled stainless steel waste tank. The condensed overheads would be vaporized to the stack.

Process Off-gas Streams

Off-gases from the dissolver would be scrubbed with a mercuric nitrate solution to reduce levels of radioactive iodine in the effluent, and then treated in an absorber to convert nitrogen oxides to nitric acid suitable for recycling. The dissolver off-gas and vessel off-gas streams would be combined and passed successively through a second iodine scrubber containing mercuric nitrate, silver zeolite beds for iodine sorption, and high-efficiency filters before release to the stack.

Facilities for the retention of other radionuclides such as ^{85}Kr, tritium, and ^{14}C (as CO_2) were not in place in the 1970s reprocessing plant although there were plans to recover ^{85}Kr.

UF_6 Preparation

The UF_6 plant was designed with an annual capacity of 1,500 MTU and assumed to operate 24 hours per day for up to 300 days a year. Scrap from the plant operations would be stored until processed in the appropriate facility after which it would be shipped off site for either re-use or for disposal as contaminated waste, as determined by analysis.

The individual process steps for the conversion of uranyl nitrate to uranium hexafluoride in a UF_6 conversion plant co-located with a reprocessing/recycling facility are:

- Receipt of purified uranyl nitrate solution from a reprocessing plant;
- Concentration of the uranyl nitrate feed solution via evaporation;
- Conversion of the uranyl nitrate to UO_3 by heating to de-nitrate it;
- Hydrogen reduction of UO_3 to UO_2;
- Hydrofluorination of UO_2 to UF_4, using gaseous HF;
- Fluorination of UF_4 to UF_6, using electrolytically generated F_2;
- Freezing and then resubliming UF_6 in a series of cold traps to purify it[36]; and
- Packaging of the UF_6 product into standard transport cylinders.

All processing steps which involve radioactive materials would be performed inside equipment maintained at negative pressure relative to the adjacent, less radioactive, areas of the conversion building. The pressure differences would be maintained so that flow of air is from uncontaminated areas into areas of potentially higher contamination levels, thus limiting the spread of radioactivity.

The equipment forms the first level of confinement; the conversion building forms the second level. Pressure differences would be maintained by automatically controlled, zoned ventilation systems. Spare ventilation fans and required controls, which are provided, would be connected to independent or installed emergency power systems in the event of loss of normal plant power, to ensure that the required pressure differences would be maintained.

Plutonium Precipitation and Conversion

The feed material for the Plutonium Product Facility (PPF) would be separated plutonium nitrate solution from the plutonium nitrate storage tanks in the Separations Facility. Its typical characteristics are given in the Table A2. The alpha, neutron, and gamma emissions require special features for confinement and shielding. The radioactive decay heat and potential criticality of concentrated plutonium solutions and products require special design constraints for the processing equipment within the PPF.

Table A2 Characteristics of plutonium nitrate feed to the BNFP plutonium product facility

[36] Small amounts of some radionuclides having volatile fluorides, most notably tellurium, neptunium, and technetium, follow the uranium all the way to the UF_6 plant, and must be removed by fractional sublimation.

Characteristic	Value
Plutonium concentration, g/liter[a]	100-360
Nitric acid concentration, M	2 - 10
Uranium concentration, ppm	Less than 10,000
Radioactive decay heat, Btu hr^{-1} (kg Pu)$^{-1}$	Less than 60
Radioactive hydrogen generation, scfh/kg Pu	Less than $5x10^{-4}$
Gamma emission, Ci/g Pu	80
Pu-238, % of total Pu	2.5
Pu-239, % of total Pu	50
Pu-240, % of total Pu	25
Pu-241, % of total Pu	15
Pu-242, % of total Pu	7.5

[a]Plutonium concentrations in excess of 250 g/liter may be processed if the heat generation rate is less than 60 Btu hr^{-1} (kg Pu)$^{-1}$.

The plutonium nitrate solution would be transferred from the storage tanks to one of two feed preparation tanks on a batch basis. The nitric acid concentration would be adjusted to 3.0 M to provide a constant feed for the conversion process. It is essential that the concentration be maintained at more than 2 M to ensure the prevention of plutonium hydrolysis to form plutonium colloid (polymer formation) and oxide precipitation. Hydroxylamine nitrate (HAN) also would be added at the feed adjustment tank to reduce any Pu(VI) to Pu(IV) prior to the precipitation step.[37] After completion of the feed adjustment step, the plutonium nitrate solution would be heated to 60°C in an in-line heater and fed continuously into a precipitator equipped with a mechanical stirrer. A solution of 1.0 M oxalic acid would be added to the precipitator, and the resulting plutonium oxalate slurry would be allowed to overflow to the digester whose role was to grow large, well-formed crystals. The digester would consist of three in-line mechanically stirred vessels (identical to the precipitator) that would be arranged to permit the overflow of one unit to cascade into the next. The precipitation and digestion vessels would be sized such that the residence time is approximately one hour.

The slurry would be fed into a rotary-drum vacuum filter for liquid-solid separation. The oxalate cake would be rinsed on the filter drum and scraped off with a "doctor blade." The filtrate would be transferred to a filtrate surge tank prior to further processing. The plutonium oxalate cake from the drum filter would be discharged directly into a rotary screw dryer-calciner. The oxalate anion would be destroyed by heating in air to form the desired plutonium dioxide product. The oxalate-cake feed rate, residence time, heating rate, and final calcining temperature are all critical to the production of a plutonium dioxide feed material with the proper characteristics for manufacturing into satisfactory fuel pellets during subsequent mixed-oxide (MOX) fuel fabrication operations. *Note: It should be recognized that this process was optimized for the anticipated MOX fuel specifications of the mid-seventies. The final product specifications required for a 2010+ fuel will establish the ultimate plutonium conversion process.*

The calciner would discharge directly onto a continuously moving screen. The powder passing through the screen would be collected in a geometrically-safe blender body which has a

[37] The electrochemical potentials of the various Pu valence states are such that Pu(III), Pu(IV) and Pu(VI) can co-exist in solution at equilibrium. Consequently, it is necessary to chemically produce the sought valence state.

maximum capacity of 40 kg of plutonium as plutonium oxide. The over-size product would pass off the top of the screen into a collection hopper. This hopper periodically would be emptied into a grinder which would reduce the particle size to meet the product specification. The grinder would empty into an identical 40-kg blender. The ground plutonium oxide would be recycled to either the top of the screen or to the dryer-calciner. These operations are especially "dirty" in that they produce a plutonium dioxide dust that is difficult to contain and handle.

Plutonium Sampling and Storage

A blender would receive nominally 32 kg of plutonium oxide, as indicated by a weighing element beneath the blender. To change the vessel, it would be remotely valved-off and transferred to the blending stand. The full blender body would be rotated about its radial center until completion of blending. The powder would be sampled and the samples analyzed to determine properties and insure homogeneity. The plutonium would be held in the blender body until the analytical results were received. Plutonium dioxide not meeting the product specifications would be either recycled or loaded-out and held for future re-work.

The blended powder in the blender body would be transferred to the powder load-out stand where the contents of the blender would be discharged into four product canisters, each holding nominally 8 kg of plutonium oxide. The canister covers would be installed, each canister would be sealed, and the outer surface would be decontaminated. Four product canisters would be loaded into a pressure vessel that would double as a storage container and primary containment vessel during shipment. The pressure vessels (which were never built) were to be vented through a 3-stage HEPA filter. The loaded pressure vessel would be placed either in the storage vault or into a shipping container for off-site shipment (if the MOX fuel fabrication plant were co-located with the reprocessing/recycling facility, off-site shipment would not be necessary).

Recycle Streams

Filtrate from the vacuum drum would be collected in the filtrate surge tank where gas and liquid would be separated. The gas would be routed to the vacuum pump. The majority of the gaseous output of the vacuum pump would be recycled to the vacuum drum filter. A small amount of the gas would be bled to the vessel off-gas system.

The liquid from the filtrate surge tanks would be pumped through cartridge-type secondary filters into the filtrate evaporator feed tank. The filtrate would be transferred from the filtrate evaporator feed tank by air lift into the filtrate evaporator. In the evaporator, the filtrate would be distilled sufficiently for destruction of the oxalic acid and to reduce the volume of solution containing plutonium.

The residue from the evaporator would be sequentially cooled, passed through another secondary cartridge-type filtration step to remove any possible solid (normally not expected), and then collected in the concentrate catch tank. The filtrate concentrate then would be transferred by jet to the concentrate sample tank where it would be sampled. If analyses indicated the presence of oxalic acid, it could be destroyed by returning it to the filtrate evaporator feed tank for

reprocessing or by addition of acidified potassium permanganate in the sample tank. The contents of the sample tank also would be returned to the evaporator feed tank if the presence of solids containing plutonium was detected. When sampling indicates the Pu content/mixture is satisfactory, the concentrate would be transferred to a storage tank from which it would be pumped to the Separations Facility for plutonium recovery.

The evaporator overhead would be condensed, combined with condensate from the off-gas system, and filtered with cartridge-type filters to remove any possible solids. The distillate would be collected in the distillate catch tank from which it would be transferred batch-wise to the distillate sample tank. Depending on analyses, the distillate could be transferred to the evaporator feed tank for reprocessing, the concentrate storage tank when containing recoverable plutonium, or the distillate storage tank. From the distillate storage tank, the distillate could be transferred to the Separations Facility for acid recovery.

Waste Treatment

A typical commercial reprocessing/recycling plant of the 1970s generated gaseous, liquid and solid waste, as would any modern day plant. Continuing with the example of the 1500 MTU/y designed separations capacity of the BNFP, the waste treatment specifications were as follows.

Low-level Liquid Wastes

At the BNFP low-level aqueous liquid waste was planned to be released into local area streams at the rate of about 2,000 gallons per minute (at full nominal rated operation). Maximum release temperature was 85^0F with essentially no radioactivity and only water treatment chemicals in the water.

High-level Liquid Wastes

High-level liquid waste was to be solidified after a minimum of five years of tank storage and transported to a federal repository within 10 years of generation. The BNFP initially constructed two 300,000 gallon storage tanks, manufactured of 304L stainless steel, double-walled and designed with internal stainless steel cooling coils. Relevant design data on tank contents are noted below:

Activity: 1.80×10^4 Ci/gallon

Acid concentration: 1 - 5M HNO_3

Temperature: 140^0 F

Heat generation rate: 72,000 BTU/hr•MTU

Each cylindrical high-level liquid waste tank was 16.5 m in diameter by 6.1 m high and was contained within an underground cylindrical concrete vault lined with stainless steel. Each vault

was 18.3 m in diameter and 7.6 m high. The vault floor, walls and top were 1.2 m, 0.9 m and 1.7 m thick, respectively.

It was anticipated that three additional 300,000 gallon tanks would need to be constructed for a total capacity of 1,500,000 gallons. This was expected to allow for ample storage of liquid waste prior to solidification and off-site shipment to the federal repository (not identified at that time).

Each high-level liquid waste tank contained the following equipment:

1. 48 5-cm-diameter cooling coils
2. 18 air-operated ballast tanks around the perimeter of the tank
3 9 air-operated ballast tanks in the main part of the tanks
4. 22 air-lift circulators
5. 5 steam-operated ejector pumps (empty-out jets)
6. water-seal type pressure/vacuum relief system
7. Multiple external temperature sensing points
8. 10 instrument dip tubes to measure liquid level and specific activity.

The Waste Solidification Plant (WSP) would contain the waste vitrification equipment, canister sealing, inspection and decontamination equipment, off-gas treatment equipment, and remote maintenance facilities in four process cells. The primary process functions performed in each of the cells are presented in the Table A3. All process cells in the WSP would be completely lined with stainless steel. The cells were to be surrounded by limited access areas for operating and controlling the processes in the cells. All operational and maintenance facilities in the process cells would be performed remotely using viewing windows, manipulators and cranes.

Table A3 Functions of cells in the BNFP Waste Solidification Plant

Cell Description	Cell Function
Waste vitrification	Calcine liquid waste; vitrify calcined waste; weld canisters closed
Canister decontamination	Remove external radioactivity from the canister
Off-gas treatment	Treat off-gas from WSP process vessels
Hot maintenance	Perform remote maintenance on contaminated equipment

Solid Waste Disposal

Solidified high-level waste, hulls, and alpha wastes were to be stored on-site in an interim storage area with eventual transport to a federal HLW repository. Spent fuel hull treatment was

to be optimized (e.g., hulls would be compacted or melted) in order to minimize overall capital and/or operating costs. Because of the BNFP site location, transport may have been by truck, rail or inter-modal (including barge from site to port and thence by rail or truck to the repository).

Low-level solid waste would be disposed of at a licensed low-level waste facility. At the BNFP facility, such disposal was simplified as the Chem-Nuclear Barnwell low-level waste site was immediately adjacent to the facility. While minimizing transportation costs all other relevant regulatory requirements needed to be met.

Off-Gas System

For the principal plant off-gases the initially projected release rates were:

1. Iodine

   ^{129}I: 1.4 x 10^{-6} Ci/sec (99.9%+ % retained in plant)

   ^{131}I: 1.1 x 10^{-5} Ci/sec (99.9%+ % retained in plant)

2. Krypton

   ^{85}Kr: 4.3 x 10^{-1} Ci/sec (no recovery facilities were planned in the design being initially licensed)

3. Tritium

   ^{3}H: 1.8 x 10^{-2} Ci/sec (no recovery facilities were planned in the design being initially licensed)

4. NOx: 200 pounds/hr. [release concentration less than 150 ppm (at top of stack)]

At the time, these releases were acceptable. However, as these earlier designs proceeded through their review, agreement was reached with the CEQ[38] that an effort would be made to minimize krypton and tritium releases, even though, at the time capturing these gases was not required. Cryogenic systems were considered and were being evaluated until INFCE started and the concomitant ban on reprocessing was invoked which halted further commercial reprocessing development activity.

Nuclear material and quality control groups

The facility organization will normally include a nuclear material control group which will have responsibility for developing and carrying out an accounting plan. In addition, a facility is likely to have an independent quality control group to assure compliance with the requirements imposed on the facility.

The basic accounting method developed at NFS is conventional material balance accounting.

[38] CEQ stands for Council on Environmental Quality.

The facility is divided into a number of material balance areas, and all of the movements of materials into and out of these areas are measured and recorded. At periodic intervals the inventory of materials in each of the areas is measured and a material balance is "closed". During each material balance period, the sum of the initial inventory in an area and the inputs during the period should equal the sum of the final inventory and outputs. Any discrepancy is labeled as "material unaccounted for"or "inventory difference". If the discrepancy exceeds values which might be expected to result from measurement uncertainties, then further measures are undertaken to attempt to identify the source or sources.

The material balance areas used for internal accounting purposes may not coincide with those required for national or international safeguards systems. At NFS there were eight areas designated for internal accounting. These areas are:

- Fuel Receiving and Storage
- Mechanical Processing and Dissolution
- Input Accountability and Feed Adjustment
- Process Product Storage
- Shipment
- Waste Treatment
- Underground Waste Storage
- Analytical Laboratories

Several of these areas may be treated as one for accounting purposes under national or international safeguards systems.

Records

1. Fuel Receipt Form -- This form includes information on each fuel assembly provided by the shipper including calculated uranium and plutonium content based on fuel fabricator and reactor operating history data.

2. Fuel Storage Record -- This record is the canister number and pool storage location of each fuel assembly received. This information is also maintained on a status board.

3. Feed Magazine Loading Record and Shear Operating Record – These record the movement of material within the process mechanical cell and removal of assemblies from the storage

4. General Purpose Cell Record -- This is used to record the storage of chopped fuel, movement to dissolution, and any pumping from the cell sump.

5. Leached Hull Record -- This records the gross weight, tare weight, net weight, sampling code and removal date of drums containing leached hulls.

6. Input Accountability Record -- This form records the instrument readings for the input accountability tank loading and the input sample identification.

7. Liquid Waste and Product Storage Tank Measurements -- These record the instrument readings and sample identification fo r the various process accountability vessels.

8. Plutonium or High Enrichment U Product Load-out Record – These record the gross and net weights of the product load-out containers as well as their storage locations.

9. Analytical Services Form -- This records the sample identification and analytical results.

10. Inventory Record -- This form is used to record the instrument readings and sample identification for in-process material in various vessels at the end of each processing campaign.

11. Material Status Report -- This is a consolidated inventory record which is prepared every three months.

12. Shipping Form -- This is used to record accounting data on material which is shipped from the NFS facility.

Analyses on accountability samples

The analyses performed on accountability samples include : total Uranium, total plutonium, isotopic plutonium, isotopic uranium, and density. The techniques used include : mass spectrometry, amperometric titration, isotopic dilution, alpha counting, high resolution gamma spectroscopy, and various other chemical analysis techniques. The analysis of samples from the input accountability and feed adjustment tank are particularly important for accounting purposes.

The input plutonium concentration is determined by an isotopic dilution technique. The input samples are diluted, spiked with ^{242}Pu (or sometimes ^{244}Pu), purified by ion exchange and then analyzed with a mass spectrometer. To determine the isotopic weight percentages, un-spiked samples are analyzed with a mass spectrometer. Similar techniques are used for uranium measurements, but ^{235}U or ^{233}U is used as the spiking isotope.

Similar techniques are used for the assessment of output solutions with the exception that titration techniques are normally used to determine the uranium and plutonium concentrations. In addition to assessing the product solutions, the waste materials are also assayed for uranium and plutonium content.

APPENDIX B: Decay Heat in Spent Fuel

There are advantages and disadvantages to reprocessing relatively short-cooled spent fuel. Advantages accrue with respect to heat reduction in the waste as additional actinides and selected fission products are removed prior to storage of the waste. Advantages relate to reducing the amount of spent fuel stored and reduction of the amount of heat-producing ^{241}Am when the actinides are recovered for transmutation. This reduces the need for spent fuel storage facilities and storage casks. It also reduces the potential risk of proliferation or of terrorist attack on the stored spent fuel.

The disadvantages of reprocessing relatively short-cooled spent fuel are related to the necessity to handle more highly radioactive fuel, which increases the potential hazards and adds to the complexity and cost of the reprocessing plant and processes. Fig. B1 [OECD, 2006] shows the contributions of selected actinides and fission products to heat generation rate in waste as a function of decay time for fuel irradiated to 51 GWd/MTIHM and Fig. B2 [OECD, 2006] shows the advantage of removing the actinides ^{238}Pu and ^{241}Am with respect to decay heat reduction in waste as a function of decay time.

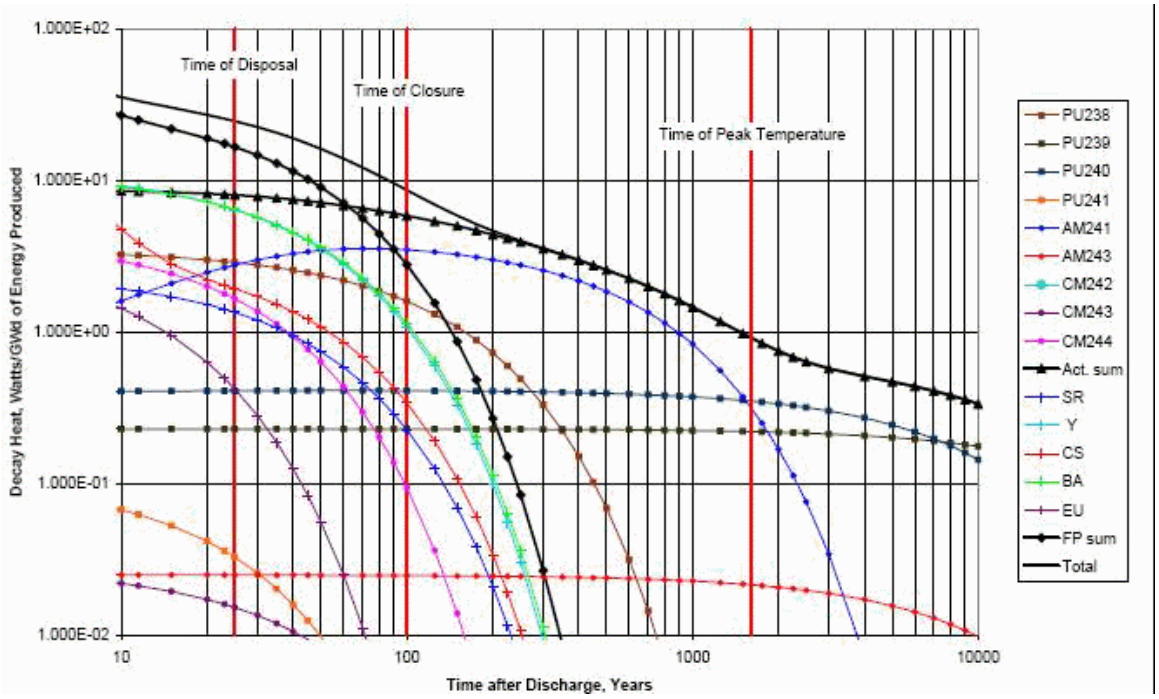

Fig. B1 Contributions of selected actinides and fission products to heat generation rate

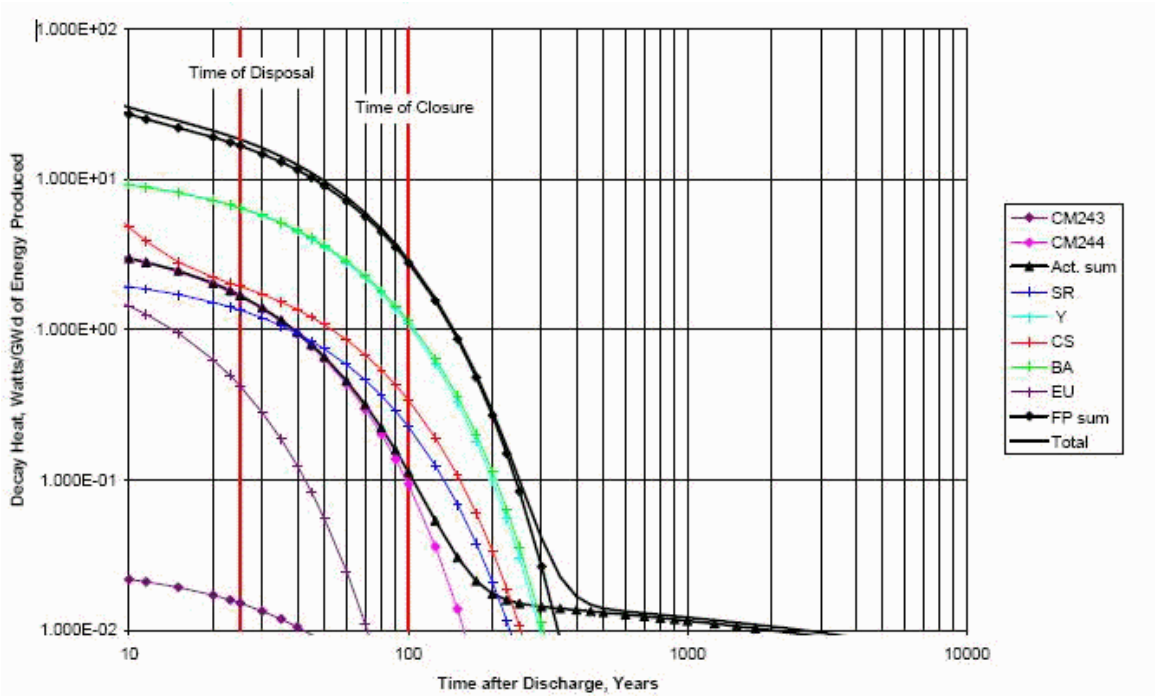

Fig. B2 Process Waste Decay Heat without Pu and Am

APPENDIX C: Committee Letters Related to Risk-Informed Activities and Probabilistic Risk Assessment

- ACNW&M letter dated May 2, 2006, from Michael T. Ryan, Chairman, ACNW&M to Nils J. Diaz, Chairman USNRC, Subject: Risk-Informed Decision-Making for Nuclear Materials and Wastes.

- ACNW&M letter dated May 3, 2004 from B. John Garrick, Chairman, ACNW&M to Nils J. Diaz, Chairman USNRC, Subject: Risk Insights Baseline Report.

- ACNW&M letter dated August 13, 2003 from B. John Garrick, Chairman, ACNW&M to Nils J. Diaz, Chairman USNRC, Subject: High Level Waste: Risk-Significance Ranking of Agreements and the Use of Risk Information to Resolve Issues.

- ACNW&M letter dated July 2, 2002 from George M. Hornberger, Chairman, ACNW&M to Richard A. Meserve, Chairman USNRC, Subject: The High-Level Program Risk Insights Initiative.

- ACNW&M letter dated April 29, 2002 from George M. Hornberger, Chairman, ACNW&M to William D. Travers, Executive Director for Operations, USNRC, Subject: Response to Letter Dated March 6, 2002 Concerning Risk-Informed Activities in the Office of Nuclear Material Safety and Safeguards.

- ACNW&M letter dated January 14, 2002 from George M. Hornberger, Chairman, ACNW&M to Richard A. Meserve, Chairman USNRC, Subject: Risk-Informed Activities in the Office of Nuclear Material Safety and Safeguard

- ACNW&M letter dated June 29, 2001 from B. John Garrick, Chairman, ACNW&M to Richard A. Meserve, Chairman USNRC, Subject: Risk-Informed, Performance-Based Regulation of Waste Management and Decommissioning.

- ACNW&M letter dated July 27, 2000 from B. John Garrick, Chairman, ACNW&M to Richard A. Meserve, Chairman USNRC, Subject: Development of Risk-Informed Regulation in the Office of Nuclear Material Safety and Safeguards.

- ACNW&M letter dated March 26, 1998 from B. John Garrick, Chairman, ACNW&M to Shirley Ann Jackson, Chairman USNRC, Subject: Risk-Informed, Performance-Based Regulation in Nuclear Waste Management.

- ACNW&M letter dated October 31, 1997 from B. John Garrick, Chairman, ACNW&M to Shirley Ann Jackson, Chairman USNRC, Subject: Application of Probabilistic Risk Assessment Methods to Performance Assessment in the NRC High-Level Waste Program.

APPENDIX D: 10 CFR Part 55 Operators Licenses

As written 10 CFR Part 55 applies to utilization facilities (e.g., nuclear reactors) and not to reprocessing plants. Key provisions concerning operator's licenses are as follows:

"(a) The applicant shall:

(1) Complete NRC form 398, "Personal Qualification Statement – Licensee," which can be obtained by writing the Office of Information Services, U.S. Nuclear Regulatory Commission, Washington, D.C. 20555-0001, by calling (301) 415-5877, or by visiting the NRC's Web site at http:www.nrc.gov and selecting forms from the index found on the home page;

(2) File an original of NRC Form 398, together with the information required in paragraphs (a) (3), (4), (5) and (6) of this section, with the appropriate Regional Administrator;

(3) Submit a written request from an authorized representative of the facility licensee by which the applicant will be employed that the written examination and operating test be administered to the applicant;

(4) Provide evidence that the applicant has successfully completed the facility licensee's requirements to be licensed as an operator or senior operator and of the facility licensee's need for an operator or a senior operator to perform assigned duties. An authorized representative of the facility licensee shall certify this evidence on Form NRC-398. This certification must include details of the applicant's qualifications, and details on courses of instruction administered by the facility licensee, and describe the nature of the training received at the facility, and the startup and shutdown experience received. In lieu of these details, the Commission may accept certification that the applicant has successfully completed a Commission approved training program that is based on a systems approach to training and that uses a simulation facility acceptable to the Commission under Section 55.45(b) of this part;

(5) Provide evidence that the applicant, as a trainee, has successfully manipulated the controls of either the facility for which a license is sought or a plant-referenced simulator that meets the requirements of 55.46 c. At a minimum, five significant control manipulations must be performed that affect reactivity or power level (this requirement is obviously directed to operating a nuclear reactor, not to a reprocessing plant). Control manipulations performed on the plant-referenced simulator may be chosen from a representative sampling of the control manipulations and plant evolutions described in 55.59 of this part, as applicable to the design of the plant for which the license application is submitted. For licensed operators applying for a senior operator license, certification that the operator has successfully operated the controls of the facility as a licensed operator shall be accepted; and

(6) Provide certification by the facility licensee of medical condition and general health on Form NRC-396, to comply with Sections 55.21, 55.23 and 55.3(a)(1)."

A copy of NRC Form-398 is to be attached for information. It should be noted that these requirements have evolved over the past several decades and are much more detailed than the10 CFR 55 rules in existence 30 years ago. It should also be noted that at this time there is no "simulation facility acceptable to the Commission" for a commercial reprocessing/recycling plant.

APPENDIX E. Radionuclide Distribution Among UREX +1a Process Streams

The basis for the following discussion is one MTIHM of PWR fuel irradiated to 33 GWd/MTIHM. The radiological characteristics of the process streams are based on an ORIGEN2 calculation documented in ADAMS (ML072820458).

Head End Process Step

Noble Metal Fission Yields from one MTIHM @ 33 Gwd/te

Tc: Grams, 774; Curies, 13.1

Ru: Grams, 2190; Curies, 0.0185

Pd: Grams, 1385; Curies, 0.113

Mo: Grams, 3351; Curies, Stable (HF dissolves ~ 0.98 of Zr/Mo, leaving ~ 67 g)

Rh: Grams, 468; Curies, 0.0216

TOTAL initial solids before dissolution: 8168 grams (or 4884 grams if Mo is partially dissolved as Zr/Mo); TOTAL Curies: 13.25

Solids amounts increase faster than linearly with fuel burnup.

461.4 Kg HM per 154.5 Kg assembly hardware: 335 Kg hardware/MTIHM. 2.874 Kg and 2.00 Ci noble metals in 335 Kg (per 1 MTIHM) hardware assuming all noble metals are combined with hardware.

Composition of solids in dissolver after dissolution

References: "X-Ray Diffraction Studies on Irradiated Nuclear Fuels," H. Kleykamp and R. Pejsa, Journal of Nuclear Materials 124 56-3, 1984; personal communication from D. O. Campbell (retired from ORNL); "Flowsheet and Source Terms for Radioactive Waste Projections," C. Forsberg et al., ORNL/TM-8462, p. 96, March 1985.

Element	Range, %
Tc	8 -12 (assume 15 %): 116 grams; 1.97 Ci
Ru	27-47 (assume 50 %): 1095 grams; 0.01 Ci
Pd	10-18 (assume 20 %): 277 grams; 0.023 Ci
Mo	16-41 (assume 40%): 1340 grams; 0.000 Ci
Rh	6-11 (assume 10 %): 46.8 grams; 0.002 Ci
U:	0.05 (assume 0.0005 fraction remains undissolved in sheared fuel); 478 Grams

TOTAL: grams 3353; TOTAL Ci: 2.00

Fraction Tc in UREX Process feed stream: 0.85

Fraction Tc in dissolver residues combined with cladding hulls: 0.15

Fraction Tc in U product: 0.0001 (assumption)

Using three Reillex HPQ columns in series no Tc remained in the U product stream. All the Tc remained on the third resin column.

Fraction Tc in fission product waste: none (assumes all is combined with hulls)

Fraction Tc in TRU product: 0.0001 (assumption)

Volatiles and Gases

References: *Light Water Reactor Nuclear Fuel Cycle,* Eds. R. G. Wymer and B. L. Vondra, CRC Press, 1981; ORNL-/TM-5987, "LWR Fuel Reprocessing and Recycle Program

Quarterly Report for Period April 1 to June 30, 1977, B. L. Vondra; "Alternate Fuel Cycle Technologies Program Quarterly Report for Period July 1 to September 30, 1977," ORNL/TM-6076, B. L. Vondra; "Study on Gaseous Effluent Treatment for Dissolution Step Nuclear Fuel Reprocessing," H. Mineo et al., WM'02 Conference, February 24-28, 2002, AZ

Voloxidation releases:

1.00 fraction ^{3}H from the fuel

0.06 fraction Kr

0.01 fraction I

0.5 fraction ^{14}C

Assume 1.000 fraction of all volatiles and gases left in fuel after voloxidation goes to dissolver off-gas.

^{3}H:

0.0208 grams (fission + activation); 201 Ci (fission + activation)

Fraction solidified as water in solid waste: 0.59 (fraction assuming no voloxidation)

Fraction in Zircaloy cladding: (0.41 if no voloxidation); 0.000 if voloxidation

39 cubic centimeters as gas at 1 atmosphere and 0 °C. (STP)

Kr

1.59 grams total of all isotopes (42.4 cubic centimeters at STP)

1847 curies ^{85}Kr (the only curie source of importance)

Fraction captured: 0.85 (assuming capture from voloxidation and from the dissolver off-gas)

Storage may be in cylinders, on solid sorbents, or by more exotic means such as ion implantation.

Xe

5.35 grams total of all isotopes (894 cubic centimeters at STP)

All isotopes are stable

Xe capture is determined by the removal process chosen, and can approach that for Kr, i.e., 0.85 fraction.

Storage may be in cylinders, or it may be released since it is essentially not radioactive.

I

"Alternate Fuel Cycle Technologies Program Quarterly Report for Period July 1 to September 30, 1977," ORNL/TM-6076, B. L. Vondra; "Environmental Radiation Requirements for Normal Operations in the Uranium Fuel Cycle," 40CFR190, Vol 1, p. 45

^{127}I: 5.594E+01 grams; stable

^{129}I: 1.800E+02 grams; 3.179E-02 Ci

TOTAL grams: 2.36E+02; TOTAL Ci: 3.179E-02

^{129}I

Fraction to off-gas from voloxidation: 0.01

Fraction in solids in dissolver: 0.022 (as AgI and PdI_2)

Fraction of I in PdI_2 (decomposes in vitrifier and goes to off-gas): 0.011

Fraction of I in AgI (stable) and goes with noble metals to hull wastes: 0.11

Fraction retained in dissolver solution: 0.0072

Fraction to off-gas from dissolver solution: 0.965

Fraction in off-gas captured and made into solid waste: 0.995

Bulk density of $AgNO_3$/silica gel: 0.719 (this absorbant will be used in Japan's Rokkasho reprocessing plant); the Iodox Process produces $Ba(IO_3)_2$ which is a potential waste form.

^{14}C

2.632E-05 g; 1.88E-06 moles (0.042 cubic centimeters at STP)

1.174E-04 Ci

Fraction from voloxidation to off-gas as CO_2: 0.05

Fraction from dissolver to off-gas as CO_2: 0.89

Fraction going to UREX process step: 0.06

Fraction going to CD-PEG: 1.00

Fraction going to TRUEX: 1.00

Fraction going to TALSPEAK: 1.00

Fraction going to F.P. waste stream: 1.00

Fraction released in F.P. waste vitrification step: 0.06

Fraction captured in off-gas trapping system: 0.96

CO_2 collected in $CaCO_3$ solution

UREX Process step

Fraction Tc in U product: 0.0001

Fraction U in U product: 0.997

Fraction U in raffinate: 0.003

Rare earths fraction to CCD-PEG: 0.9975

CCD-PEG Process step

Cs

^{133}Cs: 1.132E+3 grams; stable

^{134}Cs: 2.616E-2 grams; 3.386E+01 Ci

^{135}Cs: 3.013E+2 grams; 0.347 Ci

^{137}Cs: 6.713E+2 grams; 5.842 E+04

TOTAL grams Cs: 2.105E+03; Total Ci: 5.845E+04 Ci

Fraction Cs to product: 0.9984

^{137}Cs

Reference: "Lab-Scale Demonstration of the UREX+1a Process Using Spent Fuel," C. Pereira et al., WM'07 Symposium, February 25-March1, 2007

Fraction to U product: insignificant

Fraction to CCD-PEG: 1.00

Grams in CCD-PEG product: 670

Curies in CCD-PEG product: 5.83E+04

Fraction to TRUEX: 0.0016

Sr

^{86}Sr: 4.038E-01 grams; stable

^{88}Sr: 3.504E+02 grams; stable

^{90}Sr: 2.940E+02 grams; 4.012E+04 Ci

TOTAL grams Sr: 6.48E+02; TOTAL Ci: 4.012E+04

^{90}Sr

Reference: "Lab-Scale Demonstration of the UREX+1a Process Using Spent Fuel," C. Pereira et al., WM'07 Symposium, February 25-March1, 2007

Fraction to U product: insignificant

Grams in CCD-PEG product: 293

Curies in CCD-PEG Product: 3.98E+04

Fraction to CCD-PEG product: 0.9984

Fraction to TRUEX: 0.0016

U

U: Fraction to TRUEX: 1.000

TRUEX Process Step

Rare Earths

Reference: "Metal Recovery Plant Activities During FY 1956," ORNL-2235; "Lab-Scale Demonstration of the UREX+1a Process Using Spent Fuel," C. Pereira et al., WM'07, Symposium, February 25-March 1, 2007, Tucson, AZ

DF (total RE β): ~400 for uranium product; fraction in U product: 0.0025

Rare earths fraction to CCD-PEG: 0.9975

Rare earths fraction to TRUEX: 0.9993

Rare earth grams to TRUEX

Rare earths fraction to TALSPEAK: 0.9991

Rare earths fraction to waste: 0.99

U

U fraction to TALSPEAK: 1.000 (assumed)

TALSPEAK Process Step

Reference: "TRUEX/SREX Demonstration" Innovative Technology, OST Reference #347, Tanks Focus Area; "State of the Art in Nuclear Fuel Reprocessing," Safe Waste 2000, B. Barre and H. Masson, October 2-4, 2000; "Partitioning and Transmutation: Radioactive Waste Management Option," Workshop on Technology and Applications of Accelerator Driven Systems (ADS), ICTP Trieste, Italy, 17-28 October 2005, IAEA; *Light Water Reactor Nuclear Fuel Cycle,* Eds. R. G. Wymer and B. L. Vondra, CRC Press, 1981

Np

4.633E+02 g; 1.741+01 Ci

^{237}Np: 4.633E+02 g; 3.267E-01 Ci

^{238}Np: 3.236E-02 Ci

^{239}Np: 1.705E+01 Ci

TOTAL GRAMS: 4.633E+02; TOTAL Ci: 1.741E+01

^{237}Np

Fraction going to U product stream: (0.4 to) 0.003

Fraction going to CCD-PEG: (0.6 to) 0.997

Fraction going to TRUEX: 1.000

Fraction going to TALSPEAK: 0.9997

Fraction going to TRU product stream: 0.999

Fraction going to fission product waste: 0.001

Pu

Reference: "Lab-Scale Demonstration of the UREX+1a Process Using Spent Fuel," C. Pereira et al., WM'07, Symposium, February 25-March 1, 2007, Tucson, AZ; "Recent Advances in Reprocessing of Irradiated Fuel," Nuclear Engineering–part XX, No. 94, Vol. 65, 1969, Eds. W. A. Rodger and D. E. Ferguson

^{238}Pu: 1.211E+02 g; 2.074E+03 Ci

^{239}Pu: 5.030E+03 g; 3.128E+02 Ci

^{240}Pu: 2.316E+03 g; 5.279E+02 Ci

^{241}Pu: 3.657E+02 g; 3.769E+04 Ci

^{242}Pu; 4.509E+02 g; 1.722E+00 Ci

TOTAL grams: 8.284E+03; TOTAL Ci: 4.061E+04

Fraction going to U product stream: 0.00002

Fraction going to CCD-PEG: 1.000

Fraction going to TRUEX: 1.000

Fraction going to TALSPEAK product stream: 0.9999

Fraction going to FP waste stream: 0.0001

U

Fraction to TRU product stream: 1.000

Am + Cm

Reference: "Lab-Scale Demonstration of the UREX+1a Process Using Spent Fuel," C. Pereira et al., WM'07, Symposium, February 25-March 1, 2007, Tucson, AZ; "TRUEX/SREX Demonstration" Innovative Technology, OST Reference #347, Tanks Focus Area; "State of the Art in Nuclear Fuel Reprocessing," Safe Waste 2000, B. Barre and H. Masson, October 2-4, 2000; "Solvent Extraction Separations of Trivalent Lanthanide and Actinide Ions using an Aqueous Aminomethanediphosphonic Acid," M. P. Jensen and K. L. Nash, Proceedings of ISEC '99, International Solvent Extraction Conference, July 11-16, 1999

Am: 9.49E+02 g; 2.996E+03 Ci Cm: 1.036 g; 7.602E+02 Ci

^{241}Am: 8.638E+02 g; 2.966E+03 Ci

^{243}Am: 8.550E+01 g; 1.705E+01 Ci

^{242}Cm: no value; 5.325 Ci

^{243}Cm: 2.226E-01 g; 1.150E+01 Ci

^{244}Cm: 9.182 g; 7.432E+02 Ci

^{245}Cm: 8.521E-01 g; no value

^{246}Cm: 1.014E-01 g: no value

Fraction going to U product stream: 0.00002

Fraction going to CCD-PEG: 1.000

Fraction going to TRUEX: 1.000

Fraction going to TALSPEAK product stream: 0.9997

Fraction going to FP waste stream: 0.0003

Notes on final output stream characteristics assumptions

Volatile Effluent

Not applicable; goes up the stack

Tritium Volatile Waste

- Tritium present after 25y decay assumed to be recovered by voloxidation [Goode, 1973b] in a closed system with zero external water present. 100% recovery assumed.

- ORNL/TM-3723 reported less than 0.1% of T remained in fuel matrix after voloxidation
- T in the form of ZrT_2 should be dissociated because this occurs at ~300 C [OSHA web site] whereas voloxidation occurs at 450 C or higher and hardware melting occurs at 1450 C so the T should be evolved. Information on this is non-existent.
- Tritium assumed to be made into tritiated water by catalytic conversion [IAEA, 2004] and incorporated into polymer-impregnated cement based on studies showing at least 10x less leaching from PIC grout [Albenesius, 1983]
- 10% by weight of polymer replacing water [CDB-242]
- Although variable, 53 wt% water is optimal [CDB FAQ]. The ratio can range down to about 45 wt %. Use larger value to account for higher density of water containing D and T.
- PIC grout density is 2.2 g/cc.
- Water density and tritium content
  - = Hydrogen in water made from dissolver offgas (SNF water) is 84 wt % T, 1 wt % D, and 15 wt % H based on ORIGEN2 output and ratios of fission product yields for hydrogen isotopes.
  - = Avg. molecular weight of hydrogen is 2.7 and avg. molecular weight of SNF water is 21.4.
  - = Water density is 1.19 g/cc. Each g of SNF water contains o.12 g T.
- 2.2 g cement contains 2.2x0.53 = 1.17 g normal water or 1.17x1.19 = 1.39 g SNF water or 1.39x0.12 = 0.17 g T. Thus, 0.076 g T/g cement

C-14 Volatile Waste

- 99% of the C-14 assumed to be recovered from the dissolver off-gas using molecular sieves and scrubbed with calcium hydroxide slurry to yield calcium carbonate [DOE, 1986].

- Calcium carbonate is assumed to be fixed in grout [Croff, 1976].
  - = Grout density is 1.6 g/cc [Croff, 1976]
  - = Grout loading is 30 wt % [Croff, 1976]
- Calcium carbonate is 12 wt % carbon
- Carbon is 0.08 wt % C-14 [DOE, 1986]
- Leads to 0.31X1.6X0.12X0.0008 = 4.6E-05 g C-14/g waste

Krypton Volatile Waste

- Kr assumed to be 100 % evolved in either voloxidation or dissolution
- Kr recovered using cryogenic distillation [DOE, 1986]
- Assume 85 % recovery of Kr based on requirements of 40CFR190
  - = At 25y decay there is 351g/MT Kr (1.34 wt % Kr-85) and 5357 g/MT Xe based on ORIGEN2 calculation
  - = Kr recovery is 0.85x351 =298 g/MT
  - = Ratio of Xe in product to Kr in product ranges from 25 wt % [DOE, 1986] to 12.5 vol % (18 wt %) [IAEA, 1980]. Defer to IAEA values (18 wt %) that is based on pilot plant experience.
- Assumed to be stored in compressed gas cylinders at 1.5 atmospheres (Barnwell LLW disposal site license condition limiting pressure).
- Ignore cylinder volume
- Kr load factor is 0.0134x(1-0.18) = 0.011 g kr/g noble gas in cylinder
- Kr density in gas is 0.0047 g Kr/cc noble gas in cylinder at 1.5 atmospheres pressure

Iodine Volatile Waste

- Assume silver mordenite (AgZ) sorbent that is grouted to contain 34 wt % AgZ and use information in Table XI of [IAEA, 1987]
- Density of grouted AgZ is 2.1 g/cc
- From ORIGEN2 calculation iodine is 180 g ^{129}I /MT and 236 g total iodine/MT
- Iodine-129 loading in grout is 625 Kg Ix(180 kg ^{129}I/kg I)/11500 kg waste form + 0.0414 g ^{129}I/g waste

Cladding Waste plus Tc, Dissolver Solids, and a Fraction of Non-Volatile SNF

- Assume all cladding and other structural material (end pieces, grid spacers) will be melted into an alloy for disposal
- Include recovered Tc, dissolver solids, and fraction of non-volatile SNF. However, no tritium is included because ZrT_2 is assumed to be dissociated by voloxidation or melting.
- Radionuclide density is 1.0 because the entire waste form is composed of waste materials.

- Density is the mass-weighted average of Zr (for Zircaloy) and SS (for SS, Inconel, and Nicrobraze) which is 6.8 g/cc [Croff, 1978]
- Continue to support use of 0.05% of non-volatile SNF being associated with the cladding
  - = Historical reports use this value [Kee, 1976; DOE, 1986]
  - = Statement that after repeated leaching of Zr cladding with boiling nitric acid the Pu content was reduced to 0.0005%
  - = Information from May 2007 AREVA presentation to the Committee [ACNW&M , 2007] indicated 0.1% of Pu is in final waste forms (p 8 of presentation) and 0.04% of the alpha activity in the waste is in the cladding. This implies that 0.000004% of the SNF is associated with the cladding.

U Product

- Assume product is uranium oxide meeting ASTM [ASTM, 2007] purity specs suitable for uranyl nitrate that is the direct product of reprocessing.
  - = The concentration of ^{99}Tc in the U product is based on typical measured values at THORP (see Table 3 in the main report) which is 0.03 ppmw. Tc remaining after the first cycle is assumed to split 50:50 between the TRU product and the fission product waste.
  - = For TRU C 788 limits TRU alpha is 6.8 nCi/g U and Np is 3.4 nCi/g U. For Np this implies that 0.00875 of the soluble Np follows the U stream. Allowing the remainder of the allowance to the limit (i.e., 3.4 nCi/g) for the TRU elements other than Np yields a DF for Pu, Am, and Cm of 4.29E-07.
- Density of product can have a wide range because the degree of compaction is unknown, and the oxidation state is unknown; use a value of 3.5 g/cc.
  - = UO_2 powder densities range from 2.0 to 5.9 [Croff, 2000]. However, product is unlikely to have a high dioxide concentration because of the cost of oxide reduction.
  - = U_3O_8 densities range from 1.5 to 4.0 [Croff, 2000].
  - = The product of the de-fluorination plants is a mix of the two oxides with more U_3O_8 than UO_2. Select the higher end of the U_3O_8 density range to account for the UO_2 component.

TRU Product

- Assume it's converted to an oxide (mainly dioxides) and fabricated into pellets.
- Calculate theoretical density of fuel based on values from CRC handbook and book on isotopic power sources weighted by mass in O_2 TRU product
- Assume pellets are 95% of theoretical density

Cs/Sr Waste

- Assume Cs/Sr is made into an aluminosilicate waste form using steam reforming
- Bulk density of product is 1 g/cc [McGrail, 2003]

- Waste loading is 27% [Jantzen, 2002]

Fission Product Waste

- Base values on experience at DWPF
- Glass density 2.65 [Bibler, 2000]
- Waste loading 38% [Jantzen, 2004]