South Texas Project

Units 3 and 4

Threshold Value

Technical Basis

Reference

The technical basis for the Threshold Value scheme presented in this document is Revision 5 to NEI 99-01, Methodology for the Development of Threshold Values.

ACRONYMS & ABBREVIATIONS

AC .....Alternating Current
APRM .....Average Power Range Monitor
ATWS .....Anticipated Transient Without Scram
BWR .....Boiling Water Reactor
CDE.....Committed Dose Equivalent
CFR .....Code of Federal Regulations
CTMT/CNMT.....Containment
DC .....Direct Current
DHR .....Decay Heat Removal
DOT .....Department of Transportation
EAL.....Threshold Value
ECCS.....Emergency Core Cooling System
ECL .....Emergency Classification Level
ELCS.....ESF Logic and Control System
EOF .....Emergency Operations Facility
EOP .....Emergency Operating Procedure
EPA .....Environmental Protection Agency
EPG .....Emergency Procedure Guideline
EPIP .....Emergency Plan Implementing Procedure
EPRI.....Electric Power Research Institute
ERG.....Emergency Response Guideline
ESF.....Engineered Safety Feature
ESW .....Emergency Service Water
FAA.....Federal Aviation Administration
FBI .....Federal Bureau of Investigation
FEMA .....Federal Emergency Management Agency
FSAR.....Final Safety Analysis Report
GE .....General Emergency
HPCF…….High Pressure Core Flooder
IC .....Initiating Condition
IPEEE.....Individual Plant Examination of External Events (Generic Letter 88-20)
Keff .....Effective Neutron Multiplication Factor
LCO.....Limiting Condition of Operation
LER .....Licensee Event Report
LFL .....Lower Flammability Limit
LOCA.....Loss of Coolant Accident
LPFL…….Low Pressure Flooder
LWR.....Light Water Reactor
MSIV.....Main Steam Isolation Valve
MSL .....Main Steam Line
mR.....milliRoentgen
MW .....Megawatt
NEI.....Nuclear Energy Institute
NPP .....Nuclear Power Plant
NRC .....Nuclear Regulatory Commission
NSSS .....Nuclear Steam Supply System
NORAD .....North American Aerospace Defense Command
NOUE .....Notification Of Unusual Event
NUMARC .....Nuclear Management and Resources Council
OBE.....Operating Basis Earthquake
OCA .....Owner Controlled Area
ODCM/ODAM .....Off-site Dose Calculation (Assessment) Manual

ORO .....Off-site Response Organization
PA .....Protected Area
POAH.....Point of Adding Heat
PRA/PSA .....Probabilistic Risk Assessment / Probabilistic Safety Assessment
PSIG.....Pounds per Square Inch Gauge
R.....Roentgen
RCC.....Reactor Control Console
RCIC .....Reactor Core Isolation Cooling
RCS .....Reactor Coolant System
rem .....Roentgen Equivalent Man
RPS .....Reactor Protection System
RPV.....Reactor Pressure Vessel
RVLIS .....Reactor Vessel Level Indicating System
RWCU.....Reactor Water Cleanup
SBGTS .....Stand-By Gas Treatment System
SBO.....Station Blackout
SI .....Safety Injection
SPDS .....Safety Parameter Display System
SRO.....Senior Reactor Operator
SSE.....Safe Shutdown Earthquake
TEDE .....Total Effective Dose Equivalent
TAF .....Top of Active Fuel
TSC .....Technical Support Center

1.0 METHODOLOGY FOR DEVELOPMENT OF THRESHOLD VALUES

1.1 Background

The NEI EAL Task Force developed a systematic approach and supporting basis for EAL development. This methodology developed a set of generic EAL guidelines, together with the basis for each, such that they could be used and adapted by each utility on a consistent basis. The review of the industry's experiences with EALs, in conjunction with regulatory considerations, was applied directly to the development of this generic set of EAL guidelines. The generic guidelines were intended to clearly define conditions that represent increasing risk to the public and can give consistent classifications when applied at different sites.

The original EAL Task Force identified eight characteristics that were to be incorporated into model EALs. Experience to date has shown these considerations to be VALID. These were:

(1) Consistency (i.e., the EALs would lead to similar decisions under similar circumstances at different plants);

(2) Human engineering and user friendliness;

(3) Potential for classification upgrade only when there is an increasing threat to public health and safety;

(4) Ease of upgrading and downgrading;

(5) Thoroughness in addressing, and disposing of, the issues of completeness and accuracy raised regarding NUREG-0654, Appendix 1;

(6) Technical completeness and appropriateness for each classification level;

(7) A logical progression in classification for combinations of multiple events;

(8) Objective, observable values.

The information is presented by Recognition Category:

- R - Abnormal Rad Levels/Radiological Effluent
- C - Cold Shutdown./ Refueling System Malfunction
- F - Fission Product Barrier Degradation
- H - Hazards and Other Conditions Affecting Plant Safety
- S - System Malfunction

Each of the EAL guides in Recognition Categories R, C, H, and S is structured in the following way:

- Recognition Category - As described above.
- Emergency Class - NOUE, Alert, Site Area Emergency or General Emergency.
- Initiating Condition - Symptom- or Event-Based, Generic Identification and Title.
- Operating Mode Applicability - Power Operation, Hot Standby, Hot Shutdown, Cold Shutdown, Refueling, Defueled, All, or Not Applicable.
- Threshold Value(s) corresponding to the IC.
- Basis information for plant-specific readings and factors that may relate to changing the generic IC or EAL to a different emergency class, such as for Loss of All AC Power.
- EAL developer information – Information used to aid licensees in the development of site specific EALs.

For Recognition Category F, the EAL information is presented in a matrix format. The presentation method was chosen to clearly show the synergism among the EALs and to support more accurate dynamic assessments. For category F, the EALs are arranged by safety function, or fission product barrier. Classifications are based on various combinations of function or barrier challenges.

The EAL Guidance has the primary threshold for NOUE as operation outside the safety envelope for the plant as defined by plant technical specifications, including LCOs and Action Statement Times. In addition, certain precursors

of more serious events such as loss of offsite AC power and earthquakes are included in NOUE EALs. This provides a clear demarcation between the lowest emergency class and "non-emergency" notifications specified by 10 CFR 50.72.

1.2 Regulatory Context

Title 10, Code of Federal Regulations, Part 50 provides the regulations that govern emergency preparedness at nuclear power plants. Nuclear power reactor licensees are required to have NRC-approved "emergency response plans" for dealing with "radiological emergencies." The requirements call for both onsite and offsite emergency response plans, with the offsite plans being those approved by FEMA and used by the State and local authorities. This document deals with the utilities' approved onsite plans and procedures for response to radiological emergencies at nuclear power plants, and the links they provide to the offsite plans.

Section 50.47 of Title 10 of the Code of Federal Regulations (10 CFR 50.47), entitled "Emergency Plans," states the requirement for such plans. Part (a)(1) of this regulation states that "no operating license will be issued unless a finding is made by NRC that there is reasonable assurance that adequate protective measures can and will be taken in the event of a radiological emergency."

The major portion of 10 CFR 50.47 lists "standards" that emergency response plans must meet. The standards constitute a detailed list of items to be addressed in the plans. Of particular importance to this project is the fourth standard, which addresses "emergency classification" and "action levels." These terms, however, are not defined in the regulation.

10 CFR 50.54, "Conditions of licenses," emphasizes that power reactor licensees must "follow, and maintain in effect, emergency plans which meet the standards in Part 50.47(b) and the requirements in Appendix E to this part." The remainder of this part deals primarily with required implementation dates.

10 CFR 50.54(q) allows licensees to make changes to emergency plans without prior Commission approval only if: (a) the changes do not decrease the effectiveness of the plans and (b) the plans, as changed, continue to meet 10 CFR 50.47(b) standards and 10 CFR 50 Appendix E requirements. The licensee must keep a record of any such changes. Proposed changes that decrease the effectiveness of the approved emergency plans may not be implemented without application to and approval by the Commission.

10 CFR 50.72 deals with "Immediate notification requirements for operating nuclear power reactors." The "immediate" notification section actually includes three types of reports: (1) immediately after notification of State or local agencies (for emergency classification events); (2) one-hour reports; and, (3) four-hour reports.

Although 10 CFR 50.72 contains significant detail, it does not define either "Emergency Class" or "Threshold Value." But one-hour and four-hour reports are listed as "non-emergency events," namely, those which are "not reported as a declaration of an Emergency Class." Certain

10 CFR 50.72 events can also meet the Notification of Unusual Event emergency classification if they are precursors of more serious events. These situations also warrant anticipatory notification of state and local officials. (See Section 3.7, "Emergency Class Descriptions.")

By footnote, the reader is directed from 10 CFR 50.72 to 10 CFR 50 Appendix E, for information concerning "Emergency Classes."

10 CFR 50.73 describes the "Licensee event report system," which requires submittal of follow-up written reports within thirty days of required notification of NRC.

10 CFR 50 Appendix E, Section B, "Assessment Actions," mandates that emergency plans must contain "Threshold Values." EALs are to be described for: (1) determining the need for notification and participation of various agencies, and (2) determining when and what type of protective measures should be considered. Appendix E continues by stating that the EALs are to be based on: (1) in-plant conditions; (2) in-plant instrumentation; (3) onsite monitoring; and (4) offsite monitoring.

10 CFR 50 Appendix E, Section C, "Activation of Emergency Organization," also addresses "emergency classes" and "Threshold Values." This section states that EALs are to be based on: (1) onsite radiation monitoring information; (2) offsite radiation monitoring information; and, (3) readings from a number of plant sensors that indicate a potential emergency, such as containment pressure and the response of the Emergency Core Cooling System. This section also

states that "emergency classes" shall include: (1) Notification of Unusual Events (NOUEs), (2) Alert, (3) Site Area Emergency, and (4) General Emergency.

These regulations are supplemented by various regulatory guidance documents. A significant document that has dealt specifically with EALs is NUREG-0654/FEMA-REP-1, "Criteria for Preparation and Evaluation of Radiological Emergency Response Plans and Preparedness in Support of Nuclear Power Plants," October 1980.

1.3 Definitions Used to Develop EAL Methodology

Based on the above review of regulations, review of common utility usage of terms, discussions among Task Force members, and existing published information, the following definitions apply to the generic EAL methodology:

EMERGENCY CLASS: One of a minimum set of names or titles, established by the NRC, for grouping off normal nuclear power plant conditions according to (1) their relative radiological seriousness, and (2) the time-sensitive on-site and off-site radiological emergency preparedness actions necessary to respond to such conditions. The existing radiological emergency classes, in ascending order of seriousness, are called:

- (Notification of) Unusual Event (UE)
- Alert
- Site Area Emergency (SAE)
- General Emergency (GE)

INITIATING CONDITION (IC): One of a predetermined subset of nuclear power plant conditions where either the potential exists for a radiological emergency, or such an emergency has occurred.

Discussion: In NUREG-0654, the NRC introduced, but does not define, the term "initiating condition." Since the term is commonly used in nuclear power plant emergency planning, the definition above has been developed and combines both regulatory intent and the greatest degree of common usage among utilities.

Defined in this manner, an IC is an emergency condition which sets it apart from the broad class of conditions that may or may not have the potential to escalate into a radiological emergency. It can be a continuous, measurable function that is outside technical specifications, such as elevated RCS temperature or falling reactor coolant level (a symptom). It also encompasses occurrences such as FIRE (an event) or reactor coolant pipe failure (an event or a barrier breach).

THRESHOLD VALUE (EAL): A pre-determined, site-specific, observable threshold for a plant IC that places the plant in a given emergency class. An EAL can be: an instrument reading; an equipment status indicator; a measurable parameter (on-site or off-site); a discrete, observable event; results of analyses; entry into specific emergency operating procedures; or another phenomenon which, if it occurs, indicates entry into a particular emergency class.

Discussion: The term "Threshold Value" has been defined by example in the regulations, as noted in the above discussion concerning regulatory background. The term had not, however, been defined operationally in a manner to address all contingencies.

There are times when an EAL will be a threshold point on a measurable continuous function, such as a primary system coolant leak that has exceeded technical specifications for a specific plant.

At other times, the EAL and the IC will coincide, both identified by a discrete event that places the plant in a particular emergency class. For example, "Train Derailment On-site" is an example of an "NOUE" IC in NUREG-0654 that also can be an event-based EAL.

1.4 Emergency Class Descriptions

There are three considerations related to emergency classes. These are:

(1) The potential impact on radiological safety, either as known now or as can be reasonably projected;

(2) How far the plant is beyond its predefined design, safety, and operating envelopes; and

(3) Whether or not conditions that threaten health are expected to be confined to within the site boundary.

The ICs deal explicitly with radiological safety impact by escalating from levels corresponding to releases within regulatory limits to releases beyond EPA Protective Action Guideline (PAG) plume exposure levels. In addition, the "Discussion" sections below include off-site dose consequence considerations that were not included in NUREG-0654 Appendix 1.

NOTIFICATION OF UNUSUAL EVENT (NOUE):

Events are in process or have occurred which indicate a potential degradation of the level of safety of the plant or indicate a security threat to facility protection has been initiated. No releases of radioactive material requiring off-site response or monitoring are expected unless further degradation of safety systems occurs.

Discussion: Potential degradation of the level of safety of the plant is indicated primarily by exceeding plant technical specification Limiting Condition of Operation (LCO) allowable action statement time for achieving required mode change. Precursors of more serious events should also be included because precursors do represent a potential degradation in the level of safety of the plant. Minor releases of radioactive materials are included. In this emergency class, however, releases do not require monitoring or off-site response.

ALERT:

Events are in process or have occurred which involve an actual or potential substantial degradation of the level of safety of the plant or a security event that involves probable life threatening risk to site personnel or damage to site equipment because of HOSTILE ACTION. Any releases are expected to be limited to small fractions of the EPA PAG exposure levels.

Discussion: Rather than discussing the distinguishing features of "potential degradation" and "potential substantial degradation," a comparative approach would be to determine whether increased monitoring of plant functions is warranted at the Alert level as a result of safety system degradation. This addresses the operations staff's need for help, independent of whether an actual decrease in plant safety is determined. This increased monitoring can then be used to better determine the actual plant safety state, whether escalation to a higher emergency class is warranted, or whether de-escalation or termination of the emergency class declaration is warranted. Dose consequences from these events are small fractions of the EPA PAG plume exposure levels.

SITE AREA EMERGENCY (SAE):

Events are in process or have occurred which involve actual or likely major failures of plant functions needed for protection of the public or HOSTILE ACTIONS that result in intentional damage or malicious acts; 1) toward site personnel or equipment that could lead to the likely failure of or; 2) that prevent effective access to, equipment needed for the protection of the public. Any releases are not expected to result in exposure levels which exceed EPA PAG exposure levels beyond the site boundary.

Discussion: The discriminator (threshold) between Site Area Emergency and General Emergency is whether or not the EPA PAG plume exposure levels are expected to be exceeded outside the site boundary. This threshold, in addition to dynamic dose assessment considerations discussed in the EAL guidelines, clearly addresses NRC and off-site emergency response agency concerns as to timely declaration of a General Emergency.

GENERAL EMERGENCY (GE):

Events are in process or have occurred which involve actual or IMMINENT substantial core degradation or melting with potential for loss of containment integrity or HOSTILE ACTION that results in an actual loss of physical control of the facility. Releases can be reasonably expected to exceed EPA Protective Action Guideline exposure levels off-site for more than the immediate site area.

Discussion: The bottom line for the General Emergency is whether evacuation or sheltering of the general public is indicated based on EPA PAGs, and therefore should be interpreted to include radionuclide release regardless of cause. In addition, it should address concerns as to uncertainties in systems or structures (e.g. containment) response, and also events such as waste gas tank releases and severe spent fuel pool events postulated to occur at high population density sites. To better assure timely notification, EALs in this category must primarily be expressed in terms of plant function status, with secondary reliance on dose projection. In terms of fission product barriers, loss of two barriers with loss or potential loss of the third barrier constitutes a General Emergency.

1.5 Emergency Class Thresholds

The most common bases for establishing these boundaries are the technical specifications and setpoints for each plant that have been developed in the design basis calculations and the Final Safety Analysis Report (FSAR).

For those conditions that are easily measurable and instrumented, the boundary is likely to be the EAL (observable by plant staff, instrument reading, alarm setpoint, etc.) that indicates entry into a particular emergency class. For example, the main steam line radiation monitor may detect high radiation that triggers an alarm.. This same radiation level threshold, depending on plant-specific parameters, also may be the appropriate EAL for a direct entry into an emergency class.

In addition to the continuously measurable indicators, such as coolant temperature, coolant levels, leak rates, containment pressure, etc., the FSAR provides indications of the consequences associated with design basis events. Examples would include steam pipe breaks, MSIV malfunctions, and other anticipated events that, upon occurrence, place the plant immediately into an emergency class.

Another approach for defining these boundaries is the use of a plant-specific probabilistic safety assessment (PSA - also known as probabilistic risk analysis, PRA). PSAs have been completed for all individual plants PSAs can be used as a good first approximation of the relevant ICs and risk associated with emergency conditions for existing plants. Each plant has an Individual Plant Evaluation (IPE) and an Individual Plant Evaluation for External Events (IPEEE). Generic insights from a PSA/ PRA, the IPE, IPEEE and related severe accident assessments which apply to EALs and emergency class determinations are:

1. Core damage frequency at many BWRs is dominated by sequences involving prolonged loss of all AC power. In addition, prolonged loss of all AC power events are extremely important at PWRs. This would indicate that should this occur, and AC power is not restored within 15 minutes, entry into the emergency class at no lower than a Site Area Emergency, when the plant was initially at power, would be appropriate. This implies that precursors to loss of all AC power events should appropriately be included in the EAL structure.
2. For severe core damage events, uncertainties exist in phenomena important to accident progressions leading to containment failure. Because of these uncertainties, predicting containment integrity may be difficult in these conditions. This is why maintaining containment integrity alone following sequences leading to severe core damage may be an insufficient basis for not escalating to a General Emergency.
3. PRAs show that leading contributors to latent fatalities were containment bypass, large LOCA with early containment failure, Station Blackout longer than 8 hours (e.g., LOCA consequences of Station Blackout), and reactor coolant pump seal failure. This indicates that generic EAL methodology must be sufficiently rigorous to address these sequences in a timely fashion.

Another critical element of the analysis to arrive at these threshold (boundary) conditions is the time that the plant might stay in that condition before moving to a higher emergency class. In particular, station blackout coping analyses performed in response to 10 CFR 50.63 and Regulatory Guide 1.155, "Station Blackout," may be used to determine whether a specific plant enters a Site Area Emergency or a General Emergency directly, and when escalation to General Emergency is indicated. The time dimension is critical to the EAL since the purpose of the emergency class for state and local officials is to notify them of the level of mobilization that may be necessary to handle the emergency. This is particularly true when a Site Area Emergency or General Emergency is IMMINENT. Establishing EALs for such conditions must take estimated evacuation time into consideration to minimize the potential for the plume to pass while evacuation is underway.

Regardless of whether or not containment integrity is challenged, it is possible for significant radioactive inventory within containment to result in EPA PAG plume exposure levels being exceeded even assuming containment is within technical specification allowable leakage rates. With or without containment challenge, however, a major release of radioactivity requiring off-site protection actions from core damage is not possible unless a major failure of fuel cladding allows radioactive material to be released from the core into the reactor coolant. NUREG-1228, "Source Estimations During Incident Response to Severe Nuclear Power Plant Accidents," indicates that such conditions do not exist when the amount of clad damage is less than 20%.

1.6 Threshold Values

Planned evolutions involve preplanning to address the limitations imposed by the condition, the performance of required surveillance testing, and the implementation of specific controls prior to knowingly entering the condition. Planned evolutions to test, manipulate, repair, perform maintenance or modifications to systems and equipment that result in an EAL Threshold Value being met or exceeded are not subject to classification and activation requirements as long as the evolution proceeds as planned. However, these conditions may be subject to the reporting requirements of 10 CFR 50.72.

Classifications are based on evaluation of each Unit. All classifications are to be based upon VALID indications, reports or conditions. Indications, reports or conditions are considered VALID when they are verified by (1) an instrument channel check, or (2) indications on related or redundant indications, or (3) by direct observation by plant personnel, such that doubt related to the indication's operability, the condition's existence, or the report's accuracy is removed. Implicit in this definition is the need for timely assessment.

With the emergency classes defined, the thresholds that must be met for each EAL to be placed under the emergency class can be determined. There are two basic approaches to determining these EALs. EALs and emergency class boundaries coincide for those continuously measurable, instrumented ICs, such as radioactivity, core temperature, coolant levels, etc. For these ICs, the EAL will be the threshold reading that most closely corresponds to the emergency class description using the best available information.

For discrete (discontinuous) events, the approach will have to be somewhat different. Typically, in this category are internal and external hazards such as FIRE or earthquake. The purpose for including hazards in EALs is to assure that station personnel and off-site emergency response organizations are prepared to deal with consequential damage these hazards may cause. If, indeed, hazards have caused damage to safety functions or fission product barriers, this should be confirmed by symptoms or by observation of such failures. Therefore, it may be appropriate to enter an Alert status for events approaching or exceeding design basis limits such as Operating Basis Earthquake (OBE), design basis wind loads, FIRE within VITAL AREAS, etc. This would give the operating staff additional support and improved ability to determine the extent of plant damage. If damage to barriers or challenges to Critical Safety Functions (CSFs) have occurred or are identified, then the additional support can be used to escalate or terminate the emergency class based on what has been found. Of course, security events must reflect potential for increasing security threat levels.

The EOPs contain detailed instructions regarding the monitoring of these functions and provides a scheme for classifying the significance of the challenge to the functions. In providing EALs based on these schemes, the emergency classification can flow from the EOP assessment rather than being based on a separate EAL assessment. This is desirable as it reduces ambiguity and the time necessary to classify the event.

Although the majority of the EALs provide very specific thresholds, the Emergency Director must remain alert to events or conditions that lead to the conclusion that exceeding the EAL threshold is IMMINENT. If, in the judgment of the Emergency Director, an IMMINENT situation is at hand, the classification should be made as if the threshold has been exceeded. While this is particularly prudent at the higher emergency classes (as the early classification may provide for more effective implementation of protective measures), it is nonetheless applicable to all emergency classes.

1.7 Operating Mode Applicability

The plant operating mode that existed at the time that the event occurred, prior to any protective system or operator action initiated in response to the condition, is compared to the mode applicability of the EALs. If an event occurs, and a lower or higher plant operating mode is reached before the emergency classification can be made, the declaration shall be based on the mode that existed at the time the event occurred.

For events that occur in Cold Shutdown or Refueling, escalation is via EALs that have Cold Shutdown or Refueling for mode applicability, even if Hot Shutdown (or a higher mode) is entered during any subsequent heat-up. In particular, the Fission Product Barrier Matrix EALs are applicable only to events that initiate in Hot Shutdown or higher.

Operating Modes

Power Operations (1):	Mode Switch in Run
Startup (2):	Mode Switch in Startup/Hot Standby or Refuel (with all vessel head bolts fully tensioned)
Hot Shutdown (3):	Mode Switch in Shutdown, Average Reactor Coolant Temperature >200 °F
Cold Shutdown (4):	Mode Switch in Shutdown, Average Reactor Coolant Temperature ≤ 200 °F
Refueling (5):	Mode Switch in Shutdown or Refuel, and one or more vessel head bolts less than fully tensioned.
Defueled (None):	All reactor fuel removed from reactor pressure vessel. (Full core off load during refueling or extended outage).

2.0 Definitions

In the IC/EALs, selected words have been set in all capital letters. These words are defined terms having specific meanings as they relate to this procedure. Definitions of these terms are provided below.

AFFECTING SAFE SHUTDOWN: Event in progress has adversely affected functions that are necessary to bring the plant to and maintain it in the applicable HOT or COLD SHUTDOWN condition. Plant condition applicability is determined by Technical Specification LCOs in effect.

> Example 1: Event causes damage that results in entry into an LCO that requires the plant to be placed in HOT SHUTDOWN. HOT SHUTDOWN is achievable, but COLD SHUTDOWN is not. This event <u>is not</u> "AFFECTING SAFE SHUTDOWN."
>
> Example 2: Event causes damage that results in entry into an LCO that requires the plant to be placed in COLD SHUTDOWN. HOT SHUTDOWN is achievable, but COLD SHUTDOWN is not. This event <u>is</u> "AFFECTING SAFE SHUTDOWN."

BOMB: Refers to an explosive device suspected of having sufficient force to damage plant systems or structures.

CIVIL DISTURBANCE: A group of (site-specific #) or more persons violently protesting station operations or activities at the site.

EXPLOSION: A rapid, violent, unconfined combustion, or catastrophic failure of pressurized/energized equipment that imparts energy of sufficient force to potentially damage permanent structures, systems, or components.

EXTORTION: An attempt to cause an action at the station by threat of force.

FIRE: Combustion characterized by heat and light. Sources of smoke such as slipping drive belts or overheated electrical equipment do not constitute FIRES. Observation of flame is preferred but is NOT required if large quantities of smoke and heat are observed.

HOSTAGE: A person(s) held as leverage against the station to ensure that demands will be met by the station.

HOSTILE ACTION: An act toward a nuclear power plant or its personnel that includes the use of violent force to destroy equipment, take HOSTAGES, and/or intimidate the licensee to achieve an end. This includes attack by air, land, or water using guns, explosives, PROJECTILEs, vehicles, or other devices used to deliver destructive force. Other acts that satisfy the overall intent may be included. HOSTILE ACTION should not be construed to include acts of civil disobedience or felonious acts that are not part of a concerted attack on the Nuclear Power Plant. Non-terrorism-based EALs should be used to address such activities (i.e., This may include violent acts between individuals in the owner controlled area).

HOSTILE FORCE: One or more individuals who are engaged in a determined assault, overtly or by stealth and deception, equipped with suitable weapons capable of killing, maiming, or causing destruction.

IMMEDIATELY DANGEROUS TO LIFE AND HEALTH (IDLH): An atmospheric concentration of any toxic, corrosive or asphyxiant substance that poses an immediate threat to life or would interfere with an individual's ability to escape from a dangerous atmosphere.

IMMINENT: Mitigation actions have been ineffective, additional actions are not expected to be successful, and trended information indicates that the event or condition will occur. Where IMMINENT timeframes are specified, they shall apply.

INTRUSION: A person(s) present in a specified area without authorization. Discovery of a BOMB in a specified area is indication of INTRUSION into that area by a HOSTILE FORCE.

INDEPENDENT SPENT FUEL STORAGE INSTALLATION (ISFSI): A complex that is designed and constructed for the interim storage of spent nuclear fuel and other radioactive materials associated with spent fuel storage.

LOWER FLAMMABILITY LIMIT (LFL): The minimum concentration of a combustible substance that is capable of propagating a flame through a homogenous mixture of the combustible and a gaseous oxidizer.

NORMAL PLANT OPERATIONS: Activities at the plant site associated with routine testing, maintenance, or equipment operations, in accordance with normal operating or administrative procedures. Entry into abnormal or

emergency operating procedures, or deviation from normal security or radiological controls posture, is a departure from NORMAL PLANT OPERATIONS.

PROJECTILE: An object directed toward a NPP that could cause concern for its continued operability, reliability, or personnel safety.

PROTECTED AREA: (site-specific) typically the area which normally encompasses all controlled areas within the security PROTECTED AREA fence.

SECURITY CONDITION: Any Security Event as listed in the approved security contingency plan that constitutes a threat/compromise to site security, threat/risk to site personnel, or a potential degradation to the level of safety of the plant. A SECURITY CONDITION does not involve a HOSTILE ACTION.

SABOTAGE: Deliberate damage, mis-alignment, or mis-operation of plant equipment with the intent to render the equipment inoperable. Equipment found tampered with or damaged due to malicious mischief may not meet the definition of SABOTAGE until this determination is made by security supervision.

SECONDARY CONTAINMENT ISOLATION: The site-specific procedurally defined action taken to secure secondary containment and its associated structures, systems, and components as a functional barrier to fission product release under existing plant conditions.

SIGNIFICANT TRANSIENT: An UNPLANNED event involving one or more of the following: (1) automatic turbine runback greater than 25% thermal reactor power, (2) electrical load rejection greater than 25% full electrical load, (3) Reactor Trip, (4) Safety Injection Activation, or (5) thermal power oscillations greater than 10%.

STRIKE ACTION: A work stoppage within the PROTECTED AREA by a body of workers to enforce compliance with demands made on (site-specific). The STRIKE ACTION must threaten to interrupt NORMAL PLANT OPERATIONS.

UNISOLABLE: A breach or leak that cannot be promptly isolated.

UNPLANNED: A parameter change or an event that is not the result of an intended evolution and requires corrective or mitigative actions.

VALID: An indication, report, or condition, is considered to be VALID when it is verified by (1) an instrument channel check, (2) indications on related or redundant indicators, or (3) by direct observation by plant personnel, such that doubt related to the indicator's operability, the condition's existence, or the report's accuracy is removed. Implicit in this definition is the need for timely assessment.

VISIBLE DAMAGE: Damage to equipment or structure that is readily observable without measurements, testing, or analysis. Damage is sufficient to cause concern regarding the continued operability or reliability of the affected structure, system, or component. Example damage includes: deformation due to heat or impact, denting, penetration, rupture, cracking, and paint blistering. Surface blemishes (e.g., paint chipping, scratches) should not be included.

VITAL AREA: (site-specific) Typically any area, normally within the PROTECTED AREA, that contains equipment, systems, components, or material, the failure, destruction, or release of which could directly or indirectly endanger the public health and safety by exposure to radiation.

Recognition Category R - Abnormal Radiation Levels/Radiological Effluents

UNUSUAL EVENT	ALERT	SITE AREA EMERGENCY	GENERAL EMERGENCY
RU1 - Any Release of Gaseous or Liquid Radio-activity to the Environment Greater Than 2 Times the ODCM for 60 Minutes or Longer. *Op. Modes: All*	**RA1 -** Any Release of Gaseous or Liquid Radioactivity to the Environment Greater Than 200 Times the ODCM for 15 Minutes or Longer. *Op. Modes: All*	**RS1 -** Off-site Dose Resulting from an Actual or IMMINENT Release of Gaseous Radioactivity Greater Than 100 mrem TEDE or 500 mrem Thyroid CDE for the Actual or Projected Duration of the Release. *Op. Modes: All*	**RG1 -** Off-site Dose Resulting from an Actual or IMMINENT Release of Gaseous Radioactivity Greater Than 1000 mrem TEDE or 5000 mrem Thyroid CDE for the Actual or Projected Duration of the Release Using Actual Meteorology. *Op. Modes: All*
RU2 - Unexpected Rise in Plant Radiation. *Op. Modes: All*	**RA3 -** Rise in Radiation Levels Within the Facility that Impedes Operation of Systems Required to Maintain Safe Operations or to Establish or Maintain Cold Shutdown *Op. Modes: All* **RA2 -** Damage to Irradiated Fuel or Loss of Water Level that Has Resulted or Will Result in the Uncovering of Irradiated Fuel Outside the Reactor Vessel. *Op. Modes: All*		

Deleted: UNPLANNED

Deleted: UNPLANNED

Deleted: that Exceeds

Deleted: that Exceeds

Deleted: Exceeds

Deleted: Exceeds

Deleted: Radiological Effluent Technical Specifications/

Deleted: Radiological Effluent Technical Specifications/

Deleted: Release of Radioactive Material or

Initiating Condition -- NOTIFICATION OF UNUSUAL EVENT

Any Release of Gaseous or Liquid Radio-activity to the Environment Greater Than 2 Times the ODCM for 60 Minutes or Longer.

Deleted: UNPLANNED

Deleted: that Exceeds

Deleted: Radiological Effluent Technical Specifications/

Operating Mode Applicability: All

Threshold Values: (1 or 2 or 3)

Note: *The Emergency Director should not wait until the applicable time has elapsed, but should declare the event as soon as it is determined that the release duration has exceeded, or will likely exceed, the applicable time. In the absence of data to the contrary, assume that the release duration has exceeded the applicable time if an ongoing release is detected and the release start time is unknown.*

Deleted: *n addition, if an ongoing release is detected, and the release start time is unknown, the Emergency Director should, i*

Deleted: .

1. VALID reading on any effluent monitor greater than 2 times the alarm setpoint established by a current radioactivity discharge permit for 60 minutes or longer.

Deleted: that exceeds two

2. VALID reading on any of the following radiation monitors greater than the reading shown for 60 minutes or longer:

Deleted: one or more

Deleted: that exceeds

Reactor Building Vent	[Monitor TBD]	[Value TBD]
Offgas Post-treatment	[Monitor TBD]	[Value TBD]
Radwaste Building Exhaust	[Monitor TBD]	[Value TBD]
Turbine Building Vent	[Monitor TBD]	[Value TBD]
SGTS Exhaust	[Monitor TBD]	[Value TBD]
Turbine Gland Seal Exhaust	[Monitor TBD]	[Value TBD]

3. Confirmed sample analyses for gaseous or liquid releases indicates concentrations or release rates greater than 2 times [site-specific technical specifications TBD] with a release duration of 60 minutes or longer.

Deleted: , with a release duration of 60 minutes or longer, in excess of two

Basis:

This IC addresses a potential or actual decrease in the level of safety of the plant as indicated by a radiological release that exceeds regulatory commitments for an extended period of time. Nuclear power plants incorporate features intended to control the release of radioactive effluents to the environment. Further, there are administrative controls established to prevent unintentional releases, or control and monitor intentional releases. [*These controls are located in the Off-site Dose Calculation Manual (ODCM)*] The occurrence of extended, uncontrolled radioactive releases to the environment is indicative of a degradation in these features and/or controls.

The ODCM multiples are specified in ICs RU1 and RA1 only to distinguish between non-emergency conditions, and from each other. While these multiples obviously correspond to an off-site dose or dose rate, the emphasis in classifying these events is the degradation in the level of safety of the plant, NOT the magnitude of the associated dose or dose rate. [*Releases should not*

be prorated or averaged. For example, a release exceeding 4x ODCM for 30 minutes does not meet the threshold for this IC.]

Threshold #1 addresses radioactivity releases, that for whatever reason, cause effluent radiation monitor readings to exceed two times the Technical Specification limit and releases are not terminated within 60 minutes. [*This alarm setpoint may be associated with a planned batch release, or a continuous release path. In either case, the setpoint is established by the ODCM to warn of a release that is not in compliance with the RETS. Indexing the Threshold to the ODCM setpoints in this manner insures that the Threshold will never be less than the setpoint established by a specific discharge permit.]*

Deleted: UNPLANNED, as used in this context, includes any release for which a radioactivity discharge permit was not prepared, or a release that exceeds the conditions (e.g., minimum dilution flow, maximum discharge flow, alarm setpoints, etc.) on the applicable permit. The Emergency Director should not wait until 60 minutes has elapsed, but should declare the event as soon as it is determined that the release duration has or will likely exceed 60 minutes. Also, if an ongoing release is detected and the starting time for that release is unknown, the Emergency Director should, in the absence of data to the contrary, assume that the release has exceeded 60 minutes.¶

Formatted: Not Highlight

Threshold #2 is intended for effluent monitoring on non-routine release pathways for which a discharge permit would not normally be prepared. [*The setpoint will be based on radiation monitor readings to exceed two times the Technical Specification limit and releases are not terminated within 60 minutes. The ODCM establishes a methodology for determining effluent radiation monitor setpoints. The ODCM specifies default source terms and, for gaseous releases, prescribes the use of pre-determined annual average meteorology in the most limiting downwind sector for showing compliance with the regulatory commitments. These monitor reading EALs should be determined using this methodology.*]

Threshold #3 addresses uncontrolled releases that are detected by sample analyses, particularly on unmonitored pathways, e.g., spills of radioactive liquids into storm drains, heat exchanger leakage in river water systems, etc.

[*EALs #1 and #2 directly correlate with the IC since annual average meteorology is required to be used in showing compliance with the ODCM and is used in calculating the alarm setpoints.*] The fundamental basis of this IC is NOT a dose or dose rate, but rather the degradation in the level of safety of the plant implied by the uncontrolled release.

ABNORMAL RAD LEVELS/RADIOLOGICAL EFFLUENT

RU2

Initiating Condition -- NOTIFICATION OF UNUSUAL EVENT

UNPLANNED Rise in Plant Radiation.

Operating Mode Applicability: All

Threshold Values: (1 or 2)

1. a. Uncontrolled water level drop in the reactor cavity or spent fuel pool with all irradiated fuel assemblies remaining covered by water.

Deleted: VALID indication of u

Cavity Level	[Monitor TBD]	[Value TBD for low level alarm setpoint]
Spent Fuel Pool	[Monitor TBD]	[Value TBD for low level alarm setpoint]
Report by personnel in the area		
Remote Camera monitoring		

AND

b. VALID rise in area radiation reading on any of the following:

Reactor area (A)-4F	[Value TBD for low alarm setpoint]
Reactor area (B)-4F	[Value TBD for low alarm setpoint]
Fuel storage pool area (A)-4F	[Value TBD for low alarm setpoint]
Fuel storage pool area (B)-4F	[Value TBD for low alarm setpoint]

2. VALID Area Radiation Monitor readings or survey results indicate a rise by a factor of 1000 over normal* levels.

*Normal levels can be considered as the highest reading in the past twenty-four hours excluding the current peak value.

Basis:

This IC addresses increased radiation levels as a result of water level decreases above the RPV flange or events that have resulted, or may result, in unexpected increases in radiation dose rates within plant buildings. These radiation increases represent a loss of control over radioactive material and may represent a potential degradation in the level of safety of the plant.

Classification as a UE is warranted as a precursor to a more serious event. Indications include instrumentation, personnel reports and video cameras that allow remote observation.

While a radiation monitor could detect an increase in dose rate due to a drop in the water level, it might not be a reliable indication of whether or not the fuel is covered. The reading on an area radiation monitor may increase due to planned evolutions such as head lift, or even a fuel assembly being raised in the manipulator mast. Increased radiation monitor indications will need to combined with another indicator of water loss. For refueling events where the water level drops below the RPV flange classification would be via CU2. This event escalates to an Alert per IC RA2 if irradiated fuel outside the reactor vessel is uncovered. For events involving irradiated fuel in the

reactor vessel, escalation would be via the Fission Product Barrier Matrix for events in operating modes 1-4.

Threshold #2 addresses UNPLANNED increases in in-plant radiation levels encountered during operation of plant processes that represent a degradation in the control of radioactive material, and represent a potential degradation in the level of safety of the plant. This Threshold excludes in-plant radiation levels that may result from use of radiographic sources. A specific list of ARMs is not required which would restrict the Threshold. The intent is to identify loss of control of radioactive material in any monitored area.

This event escalates to an Alert per IC RA3 if the increase in dose rates impedes personnel access necessary for safe operation.

ABNORMAL RAD LEVELS/RADIOLOGICAL EFFLUENT

RA1

Initiating Condition -- ALERT

Any Release of Gaseous or Liquid Radioactivity to the Environment Greater Than 200 Times the ODCM for 15 Minutes or Longer.

Deleted: that Exceeds

Deleted: Radiological Effluent Technical Specifications

Operating Mode Applicability: All

Threshold Values: (1 or 2 or 3)

Note: *The Emergency Director should not wait until the applicable time has elapsed, but should declare the event as soon as it is determined that the release duration has exceeded, or will likely exceed, the applicable time. In the absence of data to the contrary, assume that the release duration has exceeded the applicable time if an ongoing release is detected and the release start time is unknown.*

Deleted: *n addition, if an ongoing release is detected, and the release start time is unknown, the Emergency Director should, i*

1. VALID reading on any effluent monitor greater than 200 times the alarm setpoint established by a current radioactivity discharge permit for 15 minutes or longer.

Deleted: that exceeds

2. VALID reading on any of the following radiation monitors greater than the reading shown for 15 minutes or longer:

Deleted: one or more

Deleted: that exceeds

Reactor Building Vent	[Monitor TBD]	[Value TBD]
Offgas Discharge (Post-treatment)	[Monitor TBD]	[Value TBD]
Radwaste Building Exhaust	[Monitor TBD]	[Value TBD]
Turbine Building Vent	[Monitor TBD]	[Value TBD]
SGTS Exhaust	[Monitor TBD]	[Value TBD]
Turbine Gland Seal Offgas	[Monitor TBD]	[Value TBD]
Radwaste Liquid Discharge	[Monitor TBD]	[Value TBD]

3. Confirmed sample analyses for gaseous or liquid releases indicates concentrations or release rates greater than 200 times [site-specific technical specifications TBD] with a release duration of 15 minutes or longer.

Deleted: ,

Deleted: with a release duration of 15 minutes or longer

Deleted: in excess of

Basis:

This IC addresses a potential or actual decrease in the level of safety of the plant as indicated by a radiological release that exceeds regulatory commitments for an extended period of time. Administrative controls in the Off-site Dose Calculation Manual (ODCM) are established to prevent unintentional releases, or control and monitor intentional releases. The occurrence of extended, uncontrolled radioactive releases to the environment is indicative of a degradation in the features and/or controls established to prevent unintentional releases, or control and monitor intentional releases.

The ODCM multiples are specified in ICs RU1 and RA1 only to distinguish between non-emergency conditions, and from each other. While these multiples obviously correspond to an off-site dose or dose rate, the emphasis in classifying these events is the degradation in the level of safety of the plant, NOT the magnitude of the associated dose or dose rate. Releases should not be prorated or averaged.

UNPLANNED includes any release for which a radioactivity discharge permit was not prepared, or a release that exceeds the conditions (e.g., minimum dilution flow, maximum discharge flow, alarm setpoints, etc.) on the applicable permit. The Emergency Director should not wait until 15 minutes has elapsed, but should declare the event as soon as it is determined that the release duration has or will likely exceed 15 minutes. Also, if an ongoing release is detected and the starting time for that release is unknown, the Emergency Director should, in the absence of data to the contrary, assume that the release has exceeded 15 minutes.

Threshold #1 addresses radioactivity releases that for whatever reason cause effluent radiation monitor readings that exceed two hundred times the alarm setpoint established by the radioactivity discharge permit. This alarm setpoint may be associated with a planned batch release, or a continuous release path.

THRESHOLD #2 addresses effluent or accident radiation monitors on non-routine release pathways (i.e., for which a discharge permit would not normally be prepared). *[To ensure a realistic near-linear escalation path, a setpoint should be selected roughly half-way between the RU1 Threshold #2 value and the value calculated for RS1 rad monitor value. The setpoint will be based on radiation monitor readings to exceed two hundred times the Technical Specification limit and releases are not terminated within 60 minutes.* The OD*CM establishes a methodology for determining effluent radiation monitor setpoints. The ODCM specifies default source terms and, for gaseous releases, prescribes the use of pre-determined annual average meteorology in the most limiting downwind sector for showing compliance with the regulatory commitments. These monitor reading EALs should be determined using this methodology.*]

Threshold #3 addresses uncontrolled releases that are detected by sample analyses, particularly on unmonitored pathways, e.g., spills of radioactive liquids into storm drains, heat exchanger leakage in water systems, etc.

EALs #1 and #2 directly correlate with the IC since annual average meteorology is [*required to be*] used [*in showing compliance with the ODCM and is used in calculating the alarm setpoints*]. The fundamental basis of this IC is NOT a dose or dose rate, but rather the degradation in the level of safety of the plant implied by the uncontrolled release.

[*Due to the uncertainty associated with meteorology, emergency implementing procedures should call for the timely performance of dose assessments using actual (real-time) meteorology in the event of a gaseous radioactivity release of this magnitude. The results of these assessments should be compared to the ICs RS1 and RG1 to determine if the event classification should be escalated.*]

ABNORMAL RAD LEVELS/RADIOLOGICAL EFFLUENT

RA2

Initiating Condition -- ALERT

Damage to Irradiated Fuel or Loss of Water Level that Has Resulted or Will Result in the Uncovering of Irradiated Fuel Outside the Reactor Vessel.

Operating Mode Applicability: All

Threshold Values: (1 or 2)

1. A VALID alarm or elevated reading on any of the following radiation monitors:

Deleted: one or more

Reactor area (A)-4F	[Value TBD for high alarm setpoint]
Reactor area (B)-4F	[Value TBD for high alarm setpoint]
Fuel storage pool area (A)-4F	[Value TBD for high alarm setpoint]
Fuel storage pool area (B)-4F	[Value TBD for high alarm setpoint]
Reactor Building Vent Exhaust	[Value TBD for warning alarm setpoint]

2. A water level drop in the reactor refueling cavity or spent fuel pool that will result in irradiated fuel becoming uncovered.

Basis:

This IC addresses specific events that have resulted, or may result, in unexpected increases in radiation dose rates within plant buildings, and may be a precursor to a radioactivity release to the environment. These events represent a loss of control over radioactive material and represent a degradation in the level of safety of the plant. [*These events escalate from IC RU2 in that fuel activity has been released, or is anticipated due to fuel heatup*].

Threshold #1 addresses radiation monitor indications of fuel uncovery and/or fuel damage. Increased readings on ventilation monitors may be indication of a radioactivity release from the fuel, confirming that damage has occurred. Increased background at the monitor due to water level decrease may mask increased ventilation exhaust airborne activity and needs to be considered.

A radiation monitor could detect an increase in dose rate due to a drop in the water level, it might not be a reliable indication of whether or not the fuel is covered. The monitor could in fact be properly responding to a known event involving transfer or relocation of a source, stored in or near the fuel pool or responding to a planned evolution such as removal of the reactor head. Application of these Initiating Conditions requires understanding of the actual radiological conditions present in the vicinity of the monitor. [*Information Notice No. 90-08, "KR-85 Hazards from Decayed Fuel" should be considered in establishing radiation monitor Thresholds.*]

In Threshold #2, site-specific indications may include instrumentation such as water level and local area radiation monitors, and personnel (e.g., refueling crew) reports. [*Video cameras may allow remote observation.*]

Escalation, if appropriate, would occur via IC RS1 or RG1 or Emergency Director judgment.

Initiating Condition -- ALERT

Rise in Radiation Levels Within the Facility That Impedes Operation of Systems Required to Maintain Safe Operations or to Establish or Maintain Cold Shutdown

Deleted: Release of Radioactive Material or

Operating Mode Applicability: All

Threshold Values: (1 or 2)

1. Dose rate greater than 15 mR/hr in any of the following areas requiring continuous occupancy to maintain plant safety functions:

   Main Control Room
   Central Security Alarm Station
   Remote Shutdown Panel (when in use)
   Technical Support Center (when activated)

Deleted: VALID d

2. Dose rates greater than 1.5 R/hr on ANY Reactor Building ARM.

Deleted: VALID d

Basis:

This IC addresses increased radiation levels that impede necessary access to operating stations, or other areas containing equipment that must be operated manually or that requires local monitoring, in order to maintain safe operation or perform a safe shutdown. It is this impaired ability to operate the plant that results in the actual or potential substantial degradation of the level of safety of the plant. The cause and/or magnitude of the increase in radiation levels is not a concern of this IC. The Emergency Director must consider the source or cause of the increased radiation levels and determine if any other IC may be involved.

Areas requiring continuous occupancy includes the Main Control Room, Central Security Alarm Station, the Remote Shutdown Panel when in use for plant control and the Technical Support Center, if activated.

For areas requiring infrequent access, the 1.5 R/hr is based on radiation levels which result in receiving the annual administrative limit in one hour. [OPGP03-ZR-0050, 5.2.2] As used here, *impede,* includes hindering or interfering provided that the interference or delay is sufficient to significantly threaten the safe operation of the plant.

ABNORMAL RAD LEVELS/RADIOLOGICAL EFFLUENT

RS1

Initiating Condition -- SITE AREA EMERGENCY

Off-site Dose Resulting from an Actual or IMMINENT Release of Gaseous Radioactivity Greater Than 100 mrem TEDE or 500 mrem Thyroid CDE for the Actual or Projected Duration of the Release.

Deleted: Exceeds

Operating Mode Applicability: All

Threshold Values: (1 or 2 or 3)

Note: *If dose assessment results are available at the time of declaration, the classification should be based on Threshold #2 instead of Threshold #1. Do not delay declaration awaiting dose assessment results.*

Deleted: *While necessary declarations should not be delayed awaiting results, the dose assessment should be initiated / completed in order to determine if the classification should be subsequently escalated.*

Note: *The Emergency Director should not wait until the applicable time has elapsed, but should declare the event as soon as it is determined that the release duration has exceeded, or will likely exceed, the applicable time.*

1. VALID reading on either of the following radiation monitors greater than the reading shown for 15 minutes or longer:

Deleted: that exceeds

Deleted: or is expected to exceed

Plant Stack	Normal Range Monitor [TBD]	[Value TBD]
Plant Stack	High Range Monitor [TBD]	[Value TBD]

2. Dose assessment using actual meteorology indicates doses greater than 100 mrem TEDE or 500 mrem thyroid CDE at or beyond the site boundary.

3. Field survey results indicate closed window dose rates greater than 100 mR/hr expected to continue for more than one hour; or analyses of field survey samples indicate thyroid CDE greater than 500 mrem for one hour of inhalation, at or beyond the site boundary.

Deleted: exceeding

Deleted: exceeds

Basis:

This IC addresses radioactivity releases that result in doses at or beyond the site boundary that exceed a small fraction of the EPA Protective Action Guides (PAGs). Releases of this magnitude are associated with the failure of plant systems needed for the protection of the public.

The TEDE dose is set at 10% of the EPA PAG, while the 500 mrem thyroid CDE was established in consideration of the 1:5 ratio of the EPA PAG for TEDE and thyroid CDE.

The Emergency Director should not wait until 15 minutes has elapsed, but should declare the event as soon as it is determined that the release duration has or will likely exceed 15 minutes.

The monitors listed in Threshold #1 are the effluents of HVAC exhausts from the secondary containment, turbine building, radwaste building, and service building controlled area. [DCD 11.5.2.2.4]

[*The EPA PAGs are expressed in terms of the sum of the effective dose equivalent (EDE) and the committed effective dose equivalent (CEDE), or as the thyroid committed dose equivalent (CDE). For the purpose of these IC/EALs, the dose quantity total effective dose equivalent (TEDE), as defined in 10 CFR 20, is used in lieu of "…sum of EDE and CEDE…." The EPA PAG guidance provides for the use adult thyroid dose conversion factors. However, some states have decided to calculate child thyroid CDE. Utility IC/EALs need to be consistent with those of the states involved in the facility's emergency planning zone*.]

[*The monitor reading EALs should be determined using a dose assessment method that back calculates from the dose values specified in the IC. The meteorology used should be the same as those used for determining the monitor reading EALs in ICs RU1 and RA1. The same source term (noble gases, particulates, and halogens) may also be used as long as it maintains a realistic and near linear escalation between the EALs for the four classifications. Since doses are generally not monitored in real-time, it is suggested that a release duration of one hour be assumed, and that the EALs be based on a site specific boundary (or beyond) dose of 100 mrem whole body or 500 mrem thyroid in one hour, whichever is more limiting (as was done for EALs #2 and #4). If individual site analyses indicate a longer or shorter duration for the period in which the substantial portion of the activity is released, the longer duration should be used.*

If proper escalations do not result from the use of the same source term, if the calculated values are unrealistically high, or if correlation between the values and dose assessment values does not exist, then consider using an accident source term for RS1 and RG1 calculations.

Since dose assessment is based on actual meteorology, whereas the monitor reading EALs are not, the results from these assessments may indicate that the classification is not warranted, or may indicate that a higher classification is warranted. For this reason, emergency implementing procedures should call for the timely performance of dose assessments using actual meteorology and release information. If the results of these dose assessments are available when the classification is made (e.g., initiated at a lower classification level), the dose assessment results override the monitor reading EALs.]

Initiating Condition -- GENERAL EMERGENCY

Off-site Dose Resulting from an Actual or IMMINENT Release of Gaseous Radioactivity Greater Than 1000 mrem TEDE or 5000 mrem Thyroid CDE for the Actual or Projected Duration of the Release Using Actual Meteorology.

Deleted: Exceeds

Operating Mode Applicability: All

Threshold Values: (1 or 2 or 3)

Note: *If dose assessment results are available at the time of declaration, the classification should be based on Threshold #2 instead of Threshold #1. Do not delay declaration awaiting dose assessment results.*

Deleted: *While necessary declarations should not be delayed awaiting results, the dose assessment should be initiated / completed in order to determine if the classification should be subsequently escalated.*

Note: *The Emergency Director should not wait until the applicable time has elapsed, but should declare the event as soon as it is determined that the release duration has exceeded, or will likely exceed, the applicable time.*

1. VALID reading on either of the following radiation monitors greater than the reading shown for 15 minutes or longer:

Deleted: that exceeds

Deleted: or is expected to exceed

Plant Stack	Normal Range Monitor [TBD]	[Value TBD]
Plant Stack	High Range Monitor [TBD]	[Value TBD]

2. Dose assessment using actual meteorology indicates doses greater than 1000 mrem TEDE or 5000 mrem thyroid CDE at or beyond the site boundary.

3. Field survey results indicate closed window dose rates greater than 1000 mR/hr expected to continue for more than one hour; or analyses of field survey samples indicate thyroid CDE greater than 5000 mrem for one hour of inhalation, at or beyond site boundary.

Deleted: exceeding

Deleted: of

Basis:

This IC addresses radioactivity releases that result in doses at or beyond the site boundary that exceed the EPA Protective Action Guides (PAGs). Public protective actions will be necessary. Releases of this magnitude are associated with the failure of plant systems needed for the protection of the public and likely involve fuel damage.

The Emergency Director should not wait until 15 minutes has elapsed, but should declare the event as soon as it is determined that the release duration has or will likely exceed 15 minutes.

The monitors listed in Threshold #1 are the effluents of HVAC exhausts from the secondary containment, turbine building, radwaste building, and service building controlled area. [DCD 11.5.2.2.4]

[*The EPA PAGs are expressed in terms of the sum of the effective dose equivalent (EDE) and the committed effective dose equivalent (CEDE), or as the thyroid committed dose equivalent (CDE). For the purpose of these IC/EALs, the dose quantity total effective dose equivalent (TEDE), as*

defined in 10 CFR 20, is used in lieu of "…sum of EDE and CEDE…." The EPA PAG guidance provides for the use adult thyroid dose conversion factors. However, some states have decided to calculate child thyroid CDE. Utility IC/EALs need to be consistent with those of the states involved in the facilities emergency planning zone.

The monitor reading EALs should be determined using a dose assessment method that backcalculates from the dose values specified in the IC. The meteorology and source term (noble gases, particulates, and halogens) used should be the same as those used for determining the monitor reading EALs in ICs RU1 and RA1. This protocol will maintain intervals between the EALs for the four classifications. Since doses are generally not monitored in real-time, it is suggested that a release duration of one hour be assumed, and that the EALs be based on a site specific boundary (or beyond) dose of 1000 mrem whole body or 5000 mrem thyroid in one hour, whichever is more limiting (as was done for EALs #2 and #4). If individual site analyses indicate a longer or shorter duration for the period in which the substantial portion of the activity is released, the longer duration should be used.

Since dose assessment is based on actual meteorology, whereas the monitor reading EALs are not, the results from these assessments may indicate that the classification is not warranted. For this reason, emergency implementing procedures should call for the timely performance of dose assessments using actual meteorology and release information. If the results of these dose assessments are available when the classification is made (e.g., initiated at a lower classification level), the dose assessment results override the monitor reading EALs.]

Recognition Category C - Cold Shutdown/Refueling System Malfunctions

UNUSUAL EVENT	ALERT	SITE AREA EMERGENCY	GENERAL EMERGENCY
CU1 - RCS Leakage. *Op. Mode: Cold Shutdown*	**CA1 -** Loss of RCS/RPV Inventory. *Op. Modes: Cold Shutdown; Refueling*	**CS1 -** Loss of RPV Inventory Affecting Core Decay Heat Removal Capability. *Op. Modes: Cold Shutdown*	**CG1 -** Loss of RPV Inventory Affecting Fuel Clad Integrity with Containment Challenged. *Op. Modes: Cold Shutdown, Refueling*
CU2 - UNPLANNED Loss of RCS Inventory. *Op. Mode: Refueling*			
CU3 - Loss of All Off-site AC Power to Emergency Busses for 15 Minutes Or Longer. *Op. Modes: Cold Shutdown, Refueling*	**CA3 -** Loss of All Off-site and All On-site AC Power to Emergency Busses For 15 Minutes Or Longer. *Op. Modes: Cold Shutdown, Refueling, Defueled*		
CU4 - UNPLANNED Loss of Decay Heat Removal Capability with Irradiated Fuel in the RPV. *OP. Modes: Cold Shutdown, Refueling*	**CA4 -** Inability to Maintain Plant in Cold Shutdown with Irradiated Fuel in the RPV. *Op. Modes: Cold Shutdown, Refueling*		
CU6 - UNPLANNED Loss of All On-site or Off-site Communications Capabilities. *Op. Modes: Cold Shutdown, Refueling, Defueled*			
CU7 - UNPLANNED Loss of Required DC Power for Greater than 15 Minutes. *Op. Modes: Cold Shutdown, Refueling*			
CU8 - Inadvertent Criticality. *Op Modes: Cold Shutdown, Refueling*			

Deleted: with Irradiated Fuel in the RPV

Deleted: with Irradiated Fuel in the RPV

Deleted: with Irradiated Fuel in the RPV

Deleted: Greater Than

COLD SHUTDOWN/REFUELING SYSTEM MALFUNCTION

CU1

Initiating Condition -- NOTIFICATION OF UNUSUAL EVENT

RCS Leakage.

Operating Mode Applicability: Cold Shutdown

Threshold Values:

Note: The Emergency Director should not wait until the applicable time has elapsed, but should declare the event as soon as it is determined that the condition will likely exceed the applicable time.

1. RCS leakage results in the inability to maintain or restore RPV level greater than Level 3 [96 inches] due to RCS leakage for 15 minutes or longer.

Deleted: Unable

Deleted: greater than

Basis:

This IC is included as a UE because it is considered to be a potential degradation of the level of safety of the plant. The inability to establish and maintain level is indicative of loss of RCS inventory. Prolonged loss of RCS Inventory may result in escalation to the Alert level via either IC CA1 (Loss of RCS Inventory with Irradiated Fuel in the RPV) or CA4 (Inability to Maintain Plant in Cold Shutdown with Irradiated Fuel in the RPV).

COLD SHUTDOWN/REFUELING SYSTEM MALFUNCTION

CU2

Initiating Condition -- NOTIFICATION OF UNUSUAL EVENT

UNPLANNED Loss of RCS Inventory

Deleted: with Irradiated Fuel in the RPV

Operating Mode Applicability: Refueling

Threshold Values: (1 or 2)

Note: The Emergency Director should not wait until the applicable time has elapsed, but should declare the event as soon as it is determined that the condition will likely exceed the applicable time.

1. RCS level drop below the RPV flange [Level TBD] for 15 minutes or longer

Deleted: greater than

2. RCS/RPV level cannot be monitored with a loss of RPV inventory as indicated by unexplained:
   - Reactor Building Floor Drain Sump in High-High Alarm
   - Drywell Sump in High-High Alarm

Basis:

This IC is included as a UE because it may be a precursor of more serious conditions and, as result, is considered to be a potential degradation of the level of safety of the plant. Refueling evolutions that decrease RCS water level below the RPV flange are carefully planned and procedurally controlled. An UNPLANNED event that results in water level decreasing below the RPV flange warrants declaration of a UE due to the reduced RCS inventory that is available to keep the core covered. The allowance of 15 minutes was chosen because it is reasonable to assume that level can be restored within this time frame using any of the redundant means of refill that should be available. If level cannot be restored in this time frame then it may indicate a more serious condition exists. Continued loss of RCS Inventory will result in escalation to the Alert level via either IC CA1 (Loss of RCS/RPV Inventory with Irradiated Fuel in the RPV) or CA4 (Inability to Maintain Plant in Cold Shutdown with Irradiated Fuel in the RPV).

Deleted: one or more

[*The difference between CU1 and CU2 deals with the RCS conditions that exist between cold shutdown and refueling modes. In cold shutdown the RCS will normally be intact and standard RCS inventory and level monitoring means are available. In the refueling mode the RCS is not intact and RPV level and inventory are monitored by different means*].

Threshold 1 involves a decrease in RCS level below the top of the RPV flange that continues for 15 minutes due to an UNPLANNED event. This Threshold is not applicable to decreases in flooded reactor cavity level until such time as the level decreases to the level of the vessel flange. If RPV level continues to decrease and reaches the Low-Low ECCS Actuation Setpoint then escalation to CA1 would be appropriate.

[*Threshold 2 relates primarily to the refueling mode when normal means of core temperature indication and RCS level indication may not be available. Redundant means of RPV level indication will normally be installed (including the ability to monitor level visually) to assure that the ability to monitor level will not be interrupted. However, if all level indication were to be lost during a loss of RCS inventory event, the operators would need to determine that RPV inventory loss was*

occurring by observing sump and tank level changes. Sump and tank level increases must be evaluated against other potential sources of leakage such as cooling water sources inside the containment to ensure they are indicative of RCS leakage. Escalation to Alert would be via either CA1 or RCS heatup via CA4.]

COLD SHUTDOWN/REFUELING SYSTEM MALFUNCTION

CU3

Initiating Condition -- NOTIFICATION OF UNUSUAL EVENT

UNPLANNED Loss of All Off-site AC Power to Emergency Busses for 15 Minutes Or Longer.

Deleted: Greater Than 15 Minutes

Operating Mode Applicability: Cold Shutdown
Refueling

Threshold Value:

Note: The Emergency Director should not wait until the applicable time has elapsed, but should declare the event as soon as it is determined that the condition will likely exceed the applicable time.

1. Loss of all off-site AC power to emergency busses [3(4)A3, 3(4)B3 AND 3(4)C3] for 15 minutes or longer.

Deleted: greater than 15 minutes

Basis:

Prolonged loss of off-site AC power reduces required redundancy and potentially degrades the level of safety of the plant by rendering the plant more vulnerable to a complete Loss of AC Power (e.g., Station Blackout). Fifteen minutes was selected as a threshold to exclude transient or momentary losses of off-site power.

COLD SHUTDOWN/REFUELING SYSTEM MALFUNCTION

CU4

Initiating Condition -- NOTIFICATION OF UNUSUAL EVENT

UNPLANNED Loss of Decay Heat Removal Capability with Irradiated Fuel in the RPV.

Operating Mode Applicability: Cold Shutdown
Refueling

Threshold Values: (1 or 2)

Note: The Emergency Director should not wait until the applicable time has elapsed, but should declare the event as soon as it is determined that the condition will likely exceed the applicable time.

Formatted: Font: Not Bold

Formatted: Font: Not Bold

Formatted: Font: Bold, Italic

1. An event results in RCS temperature exceeding [200 °F].

2. Loss of all RCS temperature and RPV level indication for 15 minutes or longer.

Deleted: greater than

Basis:

This IC may be a precursor of more serious conditions and, as a result, is considered to be a potential degradation of the level of safety of the plant. In cold shutdown the ability to remove decay heat relies primarily on forced cooling flow. Operation of the systems that provide this forced cooling may be jeopardized due to the unlikely loss of electrical power or RCS inventory. Since the RCS usually remains intact in the cold shutdown mode a large inventory of water is available to keep the core covered.

During refueling the level in the RPV will normally be maintained above the RPV flange. Refueling evolutions that decrease water level below the RPV flange are carefully planned and procedurally controlled. Loss of forced decay heat removal at reduced inventory may result in more rapid increases in RCS/RPV temperatures depending on the time since shutdown.

Normal means of core temperature indication and RCS level indication may not be available in the refueling mode. Redundant means of RPV level indication are therefore procedurally installed to assure that the ability to monitor level will not be interrupted. However, if all level and temperature indication were to be lost in either the cold shutdown of refueling modes, Threshold 2 would result in declaration of a UE if either temperature or level indication cannot be restored within 15 minutes from the loss of both means of indication. Escalation to Alert would be via CA1 based on an inventory loss or CA4 based on exceeding its temperature criteria.

COLD SHUTDOWN/REFUELING SYSTEM MALFUNCTION

CU6

Initiating Condition -- NOTIFICATION OF UNUSUAL EVENT

UNPLANNED Loss of All On-site or Off-site Communications Capabilities.

Operating Mode Applicability: Cold Shutdown
Refueling
Defueled

Threshold Values: (1 or 2)

1. Loss of all of the following routine on-site communication methods affecting the ability to perform routine operations:

   [list of communications methods TBD]

2. Loss of all of the following routine off-site communication methods affecting the ability to inform state and local authorities of plant problems:

   [list of communications methods TBD]

Basis:

The purpose of this IC and its associated thresholds is to recognize a loss of communications capability that either defeats the plant operations staff ability to perform routine tasks necessary for plant operations or the ability to communicate issues with off-site authorities. The loss of off-site communications ability is expected to be significantly more comprehensive than the condition addressed by 10 CFR 50.72.

The availability of one method of ordinary off-site communications is sufficient to inform state and local authorities of plant issues. This Threshold is intended to be used only when extraordinary means (e.g., relaying of information from radio transmissions, individuals being sent to off-site locations, etc.) are being utilized to make communications possible.

[*Site-specific list for on-site communications loss must encompass the loss of all means of routine communications (e.g., commercial telephones, sound powered phone systems, page party system and radios / walkie talkies).*

Site-specific list for off-site communications loss must encompass the loss of all means of communications with off-site authorities. This should include the ENS, commercial telephone lines, telecopy transmissions, and dedicated phone systems.]

COLD SHUTDOWN/REFUELING SYSTEM MALFUNCTION

CU7

Initiating Condition -- NOTIFICATION OF UNUSUAL EVENT

UNPLANNED Loss of Required DC Power for 15 minutes or longer.

Deleted: Greater than

Operating Mode Applicability: Cold Shutdown
Refueling

Threshold Value:

Note: The Emergency Director should not wait until the applicable time has elapsed, but should declare the event as soon as it is determined that the condition will likely exceed the applicable time.

1. Less than [TBD] bus voltage on [3(4)P007A, 3(4)P007B, 3(4)P007C AND 3(4)P007D] for 15 minutes or longer.

Deleted: greater than

Basis:

The purpose of this IC and its associated EALs is to recognize a loss of DC power compromising the ability to monitor and control the removal of decay heat during Cold Shutdown or Refueling operations.

UNPLANNED is included in this IC to preclude the declaration of an emergency as a result of planned maintenance activities. [*The required busses are the minimum allowed by Technical Specifications for the mode of operation*.] It is intended that the loss of the operating (operable) train is to be considered. If this loss results in the inability to maintain cold shutdown, the escalation to an Alert will be per CA4 "Inability to Maintain Plant in Cold Shutdown with Irradiated Fuel in the RPV."

[*(Site-specific) bus voltage should be based on the minimum bus voltage necessary for the operation of safety related equipment. This voltage value should incorporate a margin of at least 15 minutes of operation before the onset of inability to operate those loads. This voltage is usually near the minimum voltage selected when battery sizing is performed. Typically the value for the entire battery set is approximately 105 VDC. For a 60 cell string of batteries the cell voltage is typically 1.75 Volts per cell. For a 58 string battery set the minimum voltage is typically 1.81 Volts per cell.*]

COLD SHUTDOWN/REFUELING SYSTEM MALFUNCTION

CU8

Initiating Condition -- NOTIFICATION OF UNUSUAL EVENT

Inadvertent Criticality.

Operating Mode Applicability: Cold Shutdown
Refueling

Threshold Values:

1. An UNPLANNED sustained positive period observed on nuclear instrumentation.

Basis:

This IC addresses criticality events that occur in Cold Shutdown or Refueling modes such as fuel mis-loading events. This IC indicates a potential degradation of the level of safety of the plant, warranting a UE classification.

COLD SHUTDOWN/REFUELING SYSTEM MALFUNCTION

CA1

Initiating Condition -- ALERT

Loss of RCS/RPV Inventory.

Deleted: with Irradiated Fuel in the RPV

Operating Mode Applicability: Cold Shutdown
Refueling

Threshold Values: (1 or 2)

Note: The Emergency Director should not wait until the applicable time has elapsed, but should declare the event as soon as it is determined that the condition will likely exceed the applicable time.

1. Loss of RCS/RPV inventory as indicated by level less than Level 1.5 [TBD inches]

2. RCS/RPV level cannot be monitored for 15 minutes or longer with a loss of RCS/RPV inventory as indicated by unexplained:
   Reactor Building Floor Drain Sump in High-High Alarm
   Drywell Sump in High-High Alarm

Deleted: greater than

Basis:

These example EALs serve as precursors to a loss of ability to adequately cool the fuel. The magnitude of this loss of water indicates that makeup systems have not been effective and may not be capable of preventing further RPV level decrease and potential core uncovery. This condition will result in a minimum classification of Alert. The Low-Low ECCS Actuation Setpoint was chosen because it is a standard setpoint at which HPCF automatically starts. The inability to restore and maintain level after reaching this setpoint would therefore be indicative of a failure of the RCS barrier.

Sump level increases must be evaluated against other potential sources of leakage such as cooling water sources inside the containment to ensure they are indicative of RCS leakage.

If RPV level continues to lower then escalation to Site Area Emergency will be via CS1 (Loss of RPV Inventory Affecting Core Decay Heat Removal Capability).

COLD SHUTDOWN/REFUELING SYSTEM MALFUNCTION

CA3

Initiating Condition -- ALERT

Loss of All Off-site and On-Site AC Power to Emergency Busses for 15 Minutes Or Longer.

Operating Mode Applicability: Cold Shutdown
Refueling
Defueled

Threshold Value:

Note: The Emergency Director should not wait until the applicable time has elapsed, but should declare the event as soon as it is determined that the condition will likely exceed the applicable time.

1. Loss of all Off-Site and On-Site AC Power to [3(4)A3, 3(4)B3 AND 3(4)C3] busses for 15 minutes or longer.

Basis:

Loss of all AC power compromises all plant safety systems requiring electric power including RHR, ECCS, Containment Heat Removal, Spent Fuel Heat Removal and the Ultimate Heat Sink. When in cold shutdown, refueling, or defueled mode the event can be classified as an Alert, because of the significantly reduced decay heat, lower temperature and pressure, increasing the time to restore one of the emergency busses, relative to that specified for the Site Area Emergency Threshold. Escalating to Site Area Emergency if appropriate, is by Abnormal Rad Levels / Radiological Effluent, or Emergency Director Judgment ICs. Fifteen minutes was selected as a threshold to exclude transient or momentary power losses.

COLD SHUTDOWN/REFUELING SYSTEM MALFUNCTION

CA4

Initiating Condition -- ALERT

Inability to Maintain Plant in Cold Shutdown with Irradiated Fuel in the RPV.

Operating Mode Applicability: Cold Shutdown
Refueling

Threshold Values: (1 or 2)

1. An UNPLANNED event results in RCS temperature greater than [200 ^{o}F] for greater than the specified duration on Table CA4.

Table CA4: RCS Reheat Duration Thresholds

RCS	SECONDARY CONTAINMENT ISOLATION	Duration
Intact	N/A	60 minutes*
Open	Established	20 minutes*
	Not Established	0 minutes

* If an RCS heat removal system is in operation within this time frame and RCS temperature is being reduced, the Threshold is not applicable.

2. An UNPLANNED event results in RCS Pressure increase greater than 10 psig due to a loss of RCS cooling.

Basis:

RCS integrity is in place when the RCS pressure boundary is in its normal condition for the cold shutdown mode of operation (e.g., no freeze seals or nozzle dams).

The RCS Reheat Duration Threshold table addresses complete loss of functions required for core cooling for greater than 60 minutes during refueling and cold shutdown modes when RCS integrity is established.

The RCS Reheat Duration Threshold table also addresses the complete loss of functions required for core cooling for greater than 20 minutes during refueling and cold shutdown modes when SECONDARY CONTAINMENT ISOLATION is established but RCS integrity is not established. The allowed 20 minute time frame was included to allow operator action to restore the heat removal function, if possible.

Finally, complete loss of functions required for core cooling during refueling and cold shutdown modes when neither SECONDARY CONTAINMENT ISOLATION nor RCS integrity are established. No delay time is allowed because the evaporated reactor coolant that may be released into the Containment during this heatup condition could also be directly released to the environment.

The note (*) indicates that this Threshold is not applicable if actions are successful in restoring an RCS heat removal system to operation and RCS temperature is being reduced within the specified time frame.

In Threshold 2, the 10 psi pressure increase addresses situations where, due to high decay heat loads, the time provided to restore temperature control, should be less than 60 minutes.

Escalation to Site Area Emergency would be via CS1 should boiling result in significant RPV level loss leading to core uncovery.

A loss of Technical Specification components alone is not intended to constitute an Alert. The same is true of a momentary UNPLANNED excursion above the Technical Specification cold shutdown temperature limit when the heat removal function is available.

The Emergency Director must remain alert to events or conditions that lead to the conclusion that exceeding the Threshold is IMMINENT. If, in the judgment of the Emergency Director, an IMMINENT situation is at hand, the classification should be made as if the threshold has been exceeded.

COLD SHUTDOWN/REFUELING SYSTEM MALFUNCTION

CS1

Initiating Condition -- SITE AREA EMERGENCY

Loss of RCS/RPV Inventory Affecting Core Decay Heat Removal Capability.

Operating Mode Applicability: Cold Shutdown
Refueling

Threshold Values: (1 or 2 or 3)

Note: The Emergency Director should not wait until the applicable time has elapsed, but should declare the event as soon as it is determined that the condition will likely exceed the applicable time.

1. With SECONDARY CONTAINMENT ISOLATION not established:

   RPV level less than Level 1 [6 inches]

OR

2. With SECONDARY CONTAINMENT ISOLATION established

   RPV inventory as indicated by RPV level less than [0 inches (TAF)].

OR

3. RPV level cannot be monitored for greater than 30 minutes with a loss of RPV inventory as indicated by unexplained:
   - Reactor Building Floor Drain Sump in High-High Alarm
   - Drywell Sump in High-High Alarm
   - Suppression Pool Level rise
   - [TBD] radiation monitor reading greater than [TBD]

Deleted: a.

Deleted: ¶
b. RPV level cannot be monitored for greater than 30 minutes with a loss of RPV inventory as indicated by unexplained:¶
<#>Reactor Building Floor Drain Sump in High-High Alarm¶
<#>Drywell Sump in High-High Alarm¶
<#>Suppression Pool Level rise¶
<#>[TBD] radiation monitor reading greater than [TBD] ¶

Deleted: a.

Deleted: b

Formatted: Indent: Left: 0"

Formatted: Indent: Left: 0.38", Tabs: 0.63", List tab + Not at 0.75" + 1"

Formatted: Indent: Left: 0.38"

Basis:

Under the conditions specified by this IC, continued decrease in RPV level is indicative of a loss of inventory control. Inventory loss may be due to an RPV breach, pressure boundary leakage, or continued boiling in the RPV.

SECONDARY CONTAINMENT ISOLATION is the procedurally defined action taken to secure secondary containment and its associated structures, systems, and components as a functional barrier to fission product release under existing plant conditions.

The 30-minute duration allows sufficient time for actions to be performed to recover needed cooling equipment. As water level in the RPV lowers, the dose rate above the core will increase. The dose rate due to this core shine should result in [TBD] monitor indication and possible alarm.

Thus, declaration of a Site Area Emergency is warranted under the conditions specified by the IC. Escalation to a General Emergency is via CG1 (Loss of RPV Inventory Affecting Fuel Clad Integrity with Containment Challenged with Irradiated Fuel in the RPV) or radiological effluent IC RG1 (Off-

site Dose Resulting from an Actual or IMMINENT Release of Gaseous Radioactivity Greater Than 1000 mrem TEDE or 5000 mrem Thyroid CDE for the Actual or Projected Duration of the Release Using Actual Meteorology).

COLD SHUTDOWN/REFUELING SYSTEM MALFUNCTION

CG1

Initiating Condition -- GENERAL EMERGENCY

Loss of RPV Inventory Affecting Fuel Clad Integrity with Containment Challenged with Irradiated Fuel in the RPV.

Operating Mode Applicability: Cold Shutdown
Refueling

Threshold Value:

Note: The Emergency Director should not wait until the applicable time has elapsed, but should declare the event as soon as it is determined that the condition will likely exceed the applicable time.

1. a. Containment challenged as indicated by ANY of the following:

   - SECONDARY CONTAINMENT ISOLATION not established
   - Hydrogen greater than [6%] **AND** Oxygen greater than [5%] inside containment.
   - UNPLANNED rise in containment pressure
   - Standby Gas Treatment Exhaust [radiation monitor TBD] reading greater than [TBD value]

AND

Formatted: Font: Bold

   b. Core uncovery for greater than 30 min. as indicated by **EITHER**:

   - RPV level less than [0 inches (TAF)]
   - RPV level cannot be monitored with core uncovery indicated by unexplained:
     - Reactor Building Floor Drain Sump in High-High Alarm
     - Drywell Sump in High-High Alarm
     - Suppression pool level rise
     - [TBD] radiation monitor reading greater than [TBD]

Basis:

In the cold shutdown mode, RPV level instrumentation systems will normally be available to detect inventory loss. However, if all level indication were to be lost during a loss of RCS inventory event, the operators would need to determine that RPV inventory loss was occurring by observing sump tank and radiation levels.

Threshold 2 represents the inability to restore and maintain RPV level to above the top of active fuel. Fuel damage is probable if RPV level cannot be restored, as available decay heat will cause boiling, further reducing the RPV level.

Sump level increases must be evaluated against other potential sources of leakage such as cooling water sources inside the containment to ensure they are indicative of RCS leakage.

As water level in the RPV lowers, the dose rate above the core will increase. The dose rate due to this core shine should result in up-scaled monitor indication and possible alarm. [*Calculations*

should be performed to conservatively estimate a site-specific dose rate setpoint indicative of core uncovery (ie…level at TAF).]

The General Emergency (GE) is declared on the occurrence of the loss or IMMINENT loss of function of <u>all three</u> barriers. RCS barrier failure resulting in core uncovery for 30 minutes or more may cause fuel clad failure. With the SECONDARY CONTAINMENT breached or challenged then the potential for unmonitored fission product release to the environment is high. This represents a direct path for radioactive inventory to be released to the environment. This is consistent with the definition of a GE.

If SECONDARY CONTAINMENT ISOLATION is re-established prior to exceeding the temperature or level thresholds of the RCS Barrier and Fuel Clad Barrier EALs, escalation to GE would not occur.

[*The use of secondary containment radiation monitors should provide indication of increased release that may be indicative of a challenge to secondary containment. The site-specific radiation monitor values should be based on the EOP "maximum safe values" because these values are easily recognizable and have an emergency basis.*]

In the early stages of a core uncovery event, it is unlikely that hydrogen buildup due to a core uncovery could result in an explosive mixture of dissolved gasses in CONTAINMENT. However, CONTAINMENT monitoring and/or sampling should be performed to verify this assumption and a General Emergency declared if it is determined that an explosive mixture exists.

Recognition Category F
FISSION PRODUCT BARRIER DEGRADATION
INITIATING CONDITION MATRIX

UE	ALERT	SITE AREA EMERGENCY	GENERAL EMERGENCY
FU1 ANY Loss or ANY Potential Loss of Containment *Op. Modes: Power Operation, Startup, Hot Shutdown*	**FA1** ANY Loss or ANY Potential Loss of EITHER Fuel Clad OR RCS *Op. Modes: Power Operation, Startup, Hot Shutdown*	**FS1** Loss or Potential Loss of ANY Two Barriers *Op. Modes: Power Operation, Startup, Hot Shutdown*	**FG1** Loss of ANY Two Barriers AND Loss or Potential Loss of Third Barrier *Op. Modes: Power Operation, Startup, Hot Shutdown*

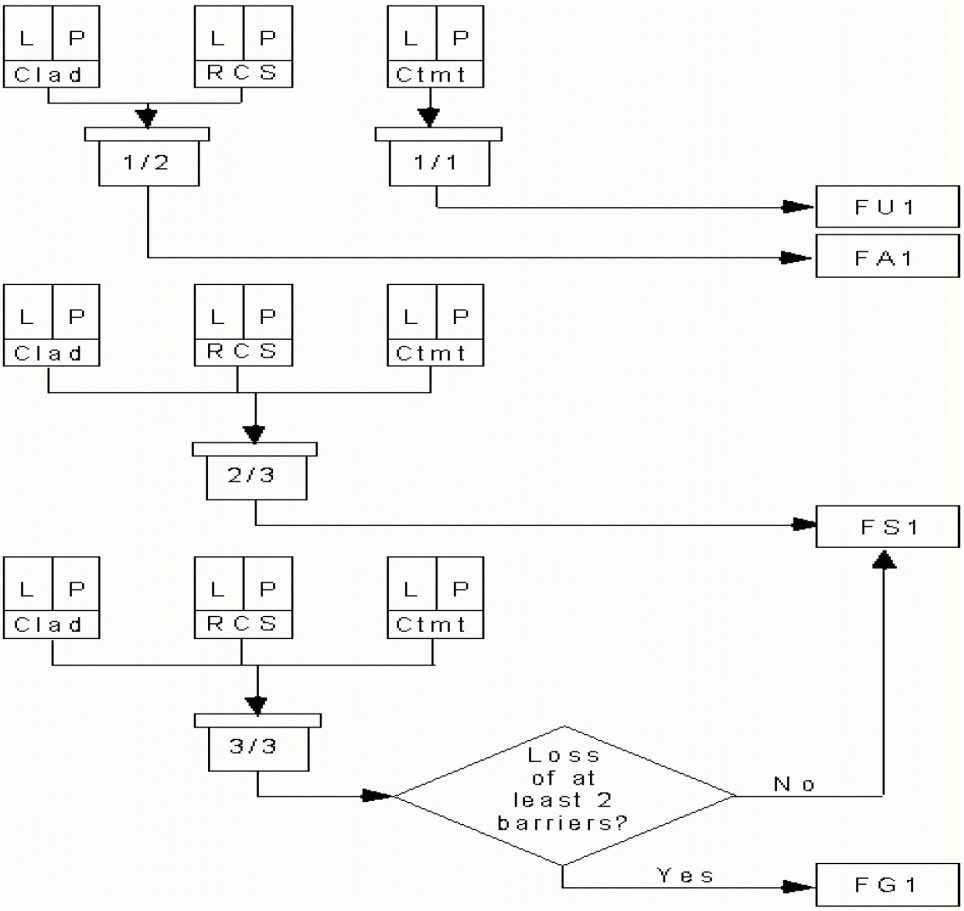

Recognition Category F
FISSION PRODUCT BARRIER DEGRADATION
NOTES

1. The logic used for these initiating conditions reflects the following considerations:

   - The Fuel Clad Barrier and the RCS Barrier are weighted more heavily than the Containment Barrier. NOUE ICs associated with RCS and Fuel Clad Barriers are addressed under System Malfunction ICs.

   - At the Site Area Emergency level, there must be some ability to dynamically assess how far present conditions are from the threshold for a General Emergency. For example, if Fuel Clad and RCS Barrier "Loss" EALs existed, that, in addition to off-site dose assessments, would require continual assessments of radioactive inventory and containment integrity. Alternatively, if both Fuel Clad and RCS Barrier "Potential Loss" EALs existed, the Emergency Director would have more assurance that there was no immediate need to escalate to a General Emergency.

   - The ability to escalate to higher emergency classes as an event deteriorates must be maintained. For example, RCS leakage steadily increasing would represent an increasing risk to public health and safety.

   - The Containment Barrier should not be declared lost or potentially lost based on exceeding Technical Specification action statement criteria, unless there is an event in progress requiring mitigation by the Containment barrier. When no event is in progress (Loss or Potential Loss of either Fuel Clad and/or RCS) the Containment Barrier status is addressed by Technical Specifications.

Fission Product Barriers

Thresholds For LOSS or POTENTIAL LOSS of Barriers*

*Determine which combination of the three barriers are lost or have a potential loss and use the following key to classify the event. Also, multiple events could occur which result in the conclusion that exceeding the loss or Potential loss thresholds is IMMINENT. In this IMMINENT loss situation use judgment and classify as if the thresholds are exceeded.

UNUSUAL EVENT	ALERT	SITE AREA EMERGENCY	GENERAL EMERGENCY
ANY loss or ANY Potential Loss of Containment	ANY loss or ANY Potential Loss of EITHER Fuel Clad or RCS	Loss or Potential Loss of ANY two Barriers	Loss of ANY two Barriers AND Loss or Potential Loss of Third Barrier

Fuel Clad Barrier Example EALs		RCS Barrier Example EALs		Containment Barrier Example EALs	
LOSS	**POTENTIAL LOSS**	**LOSS**	**POTENTIAL LOSS**	**LOSS**	**POTENTIAL LOSS**
1. Primary Coolant Activity Level		**1. Primary Containment Pressure**		**1. Primary Containment Conditions**	
Primary coolant activity greater than [TBD]	Not Applicable	Primary containment pressure greater than [1.74 psig] due to RCS leakage	Not Applicable	Primary containment pressure rise followed by a rapid unexplained drop in primary containment pressure. **OR** Primary containment pressure response not consistent with LOCA conditions	Primary containment pressure greater than [45 psig] and rising **OR** [6% Hydrogen **AND** 5% Oxygen] exists inside primary containment **OR** RPV pressure and suppression pool temperature cannot be maintained below the HCTL
2. Reactor Vessel Water Level		**2. Reactor Vessel Water Level**		**2. Reactor Vessel Water Level**	
RPV water level cannot be restored and maintained above [-32 inches].	RPV water level cannot be restored and maintained above [0 inches TAF] or cannot be determined.	RPV water level cannot be restored and maintained above [0 inches TAF] or cannot be determined.	Not Applicable	Not Applicable	Primary Containment Flooding required per EOPs.

Deleted: Conditions

Fission Product Barriers

Thresholds For LOSS or POTENTIAL LOSS of Barriers*

*Determine which combination of the three barriers are lost or have a potential loss and use the following key to classify the event. Also, multiple events could occur which result in the conclusion that exceeding the loss or Potential loss thresholds is IMMINENT. In this IMMINENT loss situation use judgment and classify as if the thresholds are exceeded.

UNUSUAL EVENT	ALERT	SITE AREA EMERGENCY	GENERAL EMERGENCY
ANY loss or ANY Potential Loss of Containment	ANY loss or ANY Potential Loss of EITHER Fuel Clad or RCS	Loss or Potential Loss of ANY two Barriers	Loss of ANY two Barriers AND Loss or Potential Loss of Third Barrier

Fuel Clad Barrier Example EALs		RCS Barrier Example EALs		Containment Barrier Example EALs	
LOSS	**POTENTIAL LOSS**	**LOSS**	**POTENTIAL LOSS**	**LOSS**	**POTENTIAL LOSS**
3. Not Applicable		**3. RCS Leak Rate**		**3. Primary Containment Isolation Failure or Bypass**	
Not applicable	Not applicable	[Main Steamline High Flow, Main Steamline Tunnel Area Temperature High, Main Steamline Turbine Area Temperature High] indicating an unisolable Main Steamline Break **OR** Emergency RPV Depressurization is required	RCS leakage greater than [50 gpm] inside the drywell **OR** Unisolable primary system leakage outside primary containment as indicated by area temperature or area radiation greater than the Max Normal values	Failure of all valves in any one line to close AND direct downstream pathway to the environment exists after primary containment isolation signal **OR** Intentional primary containment venting per EOPs **OR** Unisolable primary system leakage outside primary containment as indicated by area temperature OR area radiation greater than the Max Safe Operating values	Not applicable
4. Primary Containment Radiation Monitoring		**4. Primary Containment Radiation Monitoring**		**4. Primary Containment Radiation Monitoring**	
Primary containment radiation monitor reading greater than [TBD]	Not Applicable	Primary containment radiation monitor reading greater than [TBD]	Not Applicable	Not applicable	Primary containment radiation monitor [TBD] greater than [TBD]
OR		**OR**		**OR**	
5. Other Indications		**5. Other Indications**		**5. Other Indications**	
[MSL Rad Monitors greater than [TBD]]	Not applicable.	Not applicable.	Not applicable.	Not applicable.	Not applicable.
OR		**OR**		**OR**	
6. Emergency Director Judgment		**6. Emergency Director Judgment**		**6. Emergency Director Judgment**	
Any condition in the opinion of the Emergency Director that indicates Loss or Potential Loss of the Fuel Clad Barrier.		Any condition in the opinion of the Emergency Director that indicates Loss or Potential Loss of the RCS Barrier		Any condition in the opinion of the Emergency Director that indicates Loss or Potential Loss of the Containment barrier	

Deleted: both

Deleted: or

Deleted: Significant Radioactive Inventory in

Basis Information For
Fission Product Barrier Matrix

FUEL CLAD BARRIER THRESHOLDS: (1 or 2 or 3 or 4 or 5 or 6)

The Fuel Clad barrier consists of fuel bundle tubes that contain the fuel pellets.

1. Primary Coolant Activity Level

This [TBD] value corresponds to 300 µCi/gm I_{131} equivalent. This amount of coolant activity is well above that expected for iodine spikes and corresponds to less than 5% fuel clad damage.

There is no equivalent "Potential Loss" for this item.

2. Reactor Vessel Water Level

The "Loss" threshold [-32 inches] value corresponds to the level which is used in EOPs to indicate challenge of core cooling. This is the minimum value to assure core cooling without further degradation of the clad.

The "Potential Loss" threshold is the same as the RCS barrier "Loss" THRESHOLD #2 and corresponds to the water level at the top of the active fuel, [0 inches]. hus, this threshold indicates a "Loss" of RCS barrier and a "Potential Loss" of the Fuel Clad Barrier. This threshold appropriately escalates the emergency class to a Site Area Emergency.

3. Not applicable

4. Primary Containment Radiation Monitoring

The [TBD] reading is a value which indicates the release of reactor coolant, with elevated activity indicative of fuel damage, into the drywell. [*The reading should be calculated assuming the instantaneous release and dispersal of the reactor coolant noble gas and iodine inventory associated with a concentration of 300 µCi/gm dose equivalent I-131 or the calculated concentration equivalent to the clad damage used in* threshold *1 into the drywell atmosphere.*] Reactor coolant concentrations of this magnitude are several times larger than the maximum concentrations (including iodine spiking) allowed within technical specifications and are therefore indicative of fuel damage. This value is higher than that specified for RCS barrier Loss threshold 4. Thus, this threshold indicates a Loss of both Fuel Clad barrier and RCS barrier that appropriately escalates the emergency classification level to a Site Area Emergency.

[***Caution:*** *it is important to recognize that in the event the radiation monitor is sensitive to shine from the reactor vessel or piping, spurious readings will be present and another indicator of fuel clad damage is necessary or compensated for in the threshold value.*]

There is no "Potential Loss" threshold associated with this item.

5. Other (Site-Specific) Indications

Main Steam Line monitors at the [TBD] values are indicative of fuel clad failure.

6. Emergency Director Judgment

This threshold addresses any other factors that are to be used by the Emergency Director in determining whether the Fuel Clad barrier is lost or potentially lost. In addition, the inability to monitor the barrier should

also be incorporated in this threshold as a factor in Emergency Director judgment that the barrier may be considered Lost or Potentially Lost.

RCS BARRIER THRESHOLDS: (1 or 2 or 3 or 4 or 5 or 6)

The RCS Barrier is the reactor coolant system pressure boundary and includes the reactor vessel and all reactor coolant system piping up to the isolation valves.

1. Primary Containment Conditions

The [1.74 psig] drywell pressure is based on the drywell high pressure set point which indicates a LOCA by automatically initiating the core cooling systems.

There is no "Potential Loss" threshold corresponding to this item.

2. Reactor Vessel Water Level

The Loss threshold site specific RPV water level corresponds to the level that is used in EOPs to indicate challenge of core cooling.

This threshold is the same as Fuel Clad Barrier Potential Loss threshold #1 and corresponds to the site specific water level for containment flooding. Thus, this threshold indicates a Loss of RCS barrier and Potential Loss of Fuel Clad barrier that appropriately escalates the emergency classification level to a Site Area Emergency.

There is no "Potential Loss" threshold corresponding to this item.

Deleted: This "Loss" threshold is the same as "Potential Loss" Fuel Clad Barrier threshold 2. The Level 0 [0 inches] RPV water level corresponds to the level that is used in EOPs to indicate challenge of core cooling. This threshold appropriately escalates the emergency class to a Site Area Emergency. Thus, this threshold indicates a Loss of the RCS barrier and a Potential Loss of the Fuel Clad Barrier.¶

3. RCS Leak Rate

An unisolable MSL break indicated by [Main Steamline High Flow, Main Steamline Tunnel Area Temperature High, Main Steamline Turbine Area Temperature High] is a breach of the RCS barrier. Thus, this threshold is included for consistency with the Alert emergency classification. Unisolable high-energy line breaks such as HPCF, Feedwater, RWCU, or RCIC may also represent a significant Loss of the RCS barrier and should be considered as MSL breaks for purposes of classification.

Plant symptoms requiring Emergency RPV Depressurization (RPV Level 0 [0 inches] or Emergency RPV Depressurization is required when suppression pool temperature and RPV pressure cannot be maintained below the Heat Capacity Temperature Limit), per the EOPs is indicative of a Loss of the RCS barrier. If Emergency RPV depressurization is required, the plant operators are directed to open safety relief valves (SRVs) and keep them open. Even though the RCS is being vented into the suppression pool, a Loss of the RCS should be considered to exist due to the diminished effectiveness of the RCS pressure barrier to a release of fission products beyond its boundary.

The potential Loss of RCS based on leakage is set at a level indicative of a small breach of the RCS but which is well within the makeup capability of normal and emergency high pressure systems. Core uncovery is not a significant concern for a [50 gpm] leak, however, break propagation leading to significantly larger loss of inventory is possible.

Potential Loss of RCS based on primary system leakage outside the primary containment is determined from site-specific temperature or area radiation Max Normal setpoints in the areas of the main steam line tunnel, main turbine generator, RCIC, HPCI, etc., which indicate a direct path from the RCS to areas outside primary containment. The indicators should be confirmed to be caused by RCS leakage. The area temperature or radiation low alarm setpoints are indicated for this example to enable an Alert classification. An unisolable leak which is indicated by a high alarm setpoint escalates to a Site Area Emergency when

combined with Containment Barrier threshold 3 (after a containment isolation) and a General Emergency when the Fuel Clad Barrier criteria is also exceeded.

4. Primary Containment Radiation Monitoring

The [TBD] reading is a value which indicates the release of reactor coolant to the primary containment. [*The reading should be calculated assuming the instantaneous release and dispersal of the reactor coolant noble gas and iodine inventory associated with normal operating concentrations (i.e., within T/S) into the drywell atmosphere. This reading will be less than that specified for Fuel Clad Barrier threshold 4. Thus, this threshold would be indicative of a RCS leak only. If the radiation monitor reading increased to that value specified by Fuel Clad Barrier threshold 4, fuel damage would also be indicated.*

However, if the site specific physical location of the primary containment radiation monitor is such that radiation from a cloud of released RCS gases could not be distinguished from radiation from adjacent piping and components containing elevated reactor coolant activity, this threshold should be omitted and other site specific indications of RCS leakage substituted.]

There is no "Potential Loss" threshold associated with this item.

5. Other (Site-Specific) Indications

Not applicable.

6. Emergency Director Judgment

This threshold addresses any other factors that are to be used by the Emergency Director in determining whether the RCS barrier is lost or potentially lost. In addition, the inability to monitor the barrier should also be incorporated in this threshold as a factor in Emergency Director judgment that the barrier may be considered lost or potentially lost.

PRIMARY CONTAINMENT THRESHOLDS: (1 or 2 or 3 or 4 or 5 or 6)

The Primary Containment Barrier includes the drywell, the wetwell, their respective interconnecting paths, and other connections up to and including the outermost containment isolation valves. Containment Barrier thresholds are used primarily as discriminators for escalation from an Alert to a Site Area Emergency or a General Emergency.

1. Primary Containment Conditions

Rapid unexplained loss of pressure (i.e., not attributable to drywell spray or condensation effects) following an initial pressure increase from a high energy line break indicates a loss of containment integrity. Primary containment pressure should increase as a result of mass and energy release into containment from a LOCA. Thus, primary containment pressure not increasing under these conditions indicates a loss of containment integrity. This indicator relies on the operators recognition of an unexpected response for the condition and therefore does not have a specific value associated. The unexpected response is important because it is the indicator for a containment bypass condition.

The [45 psig] for potential loss of containment is based on the primary containment design pressure. {DCD Tier 2, 19.3.2.4 or DCD Tier 1, 2.14.1}

[6% Hydrogen and 5% Oxygen] are indicative of an explosive mixture.

The Heat Capacity Temperature Limit (HCTL) is the highest suppression pool temperature from which Emergency RPV Depressurization will not raise:

- Suppression chamber temperature above the maximum temperature capability of the suppression chamber and equipment within the suppression chamber which may be required to operate when the RPV is pressurized,
  or
- Suppression chamber pressure above Primary Containment Pressure Limit A, while the rate of energy transfer from the RPV to the containment is greater than the capacity of the containment vent.

The HCTL is a function of RPV pressure and suppression pool water level. It is utilized to preclude failure of the containment and equipment in the containment necessary for the safe shutdown of the plant and therefore, the inability to maintain plant parameters below the limit constitutes a potential loss of containment.

2. Reactor Vessel Water Level

There is no "Loss" threshold associated with this item.

The Potential Loss requirement for Primary Containment Flooding indicates adequate core cooling cannot be established and maintained and that core melt is possible. Containment flooding is required when reactor vessel level cannot be restored and maintained above TAF or reactor vessel level cannot be determined with indication that core damage is occurring. Entry into Primary Containment Flooding procedures is a logical escalation in response to the inability to maintain adequate core cooling.

The conditions in this Potential Loss threshold represents a potential core melt sequence which, if not corrected, could lead to vessel failure and increased potential for containment failure. In conjunction with Reactor Vessel water level “Loss” thresholds in the Fuel Clad and RCS barrier columns, this threshold will result in the declaration of a General Emergency -- Loss of two barriers and the Potential Loss of a third. If the emergency operating procedures have been ineffective in restoring reactor vessel level above the RCS and Fuel Clad Barrier Threshold Values, there is not a "success" path and a core melt sequence is possible.

3. Primary Containment Isolation Failure or Bypass

This threshold is intended to address the inability to isolate the containment when containment isolation is required.

Intentional venting of primary containment for primary containment pressure or combustible gas control per EOPs to the environment is considered a loss of containment. Containment venting for pressure when not in an accident situation should not be considered.

In addition, the presence of area radiation or temperature Max Safe Operating setpoints indicating unisolable primary system leakage outside the primary containment are addressed after a containment isolation. The indicators should be confirmed to be caused by RCS leakage.

There is no "Potential Loss" threshold associated with this item.

4. Primary Containment Radiation Monitoring

Deleted: Significant Radioactive Inventory in

The [TBD] value indicates significant fuel damage well in excess of that required for Loss of RCS and Fuel Clad. A major release of radioactivity requiring off-site protective actions from core damage is not possible unless a major failure of fuel cladding allows radioactive material to be released from the core into the reactor coolant. Regardless of whether containment is challenged, this amount of activity in containment, if released, could have such severe consequences that it is prudent to treat this as a Potential Loss of

containment, such that a General Emergency declaration is warranted. [*NUREG-1228, "Source Estimations During Incident Response to Severe Nuclear Power Plant Accidents," indicates that such conditions do not exist when the amount of clad damage is less than 20%. Unless there is a (site-specific) analysis justifying a higher value, it is recommended that a radiation monitor reading corresponding to 20% fuel clad damage be specified here*.]

There is no "Loss" threshold associated with this item.

5. Other (Site-Specific) Indications

Not applicable.

6. Emergency Director Judgment

This threshold addresses any other factors that are to be used by the Emergency Director in determining whether the Containment barrier is lost or potentially lost. In addition, the inability to monitor the barrier should also be incorporated in this threshold as a factor in Emergency Director judgment that the barrier may be considered lost or potentially lost. The Containment Barrier should not be declared lost or potentially lost based on exceeding Technical Specification action statement criteria, unless there is an event in progress requiring mitigation by the Containment barrier. When no event is in progress (Loss or Potential Loss of either Fuel Clad and/or RCS) the Containment Barrier status is addressed by Technical Specifications.

Recognition Category H - Hazards and Other Conditions Affecting Plant Safety

UNUSUAL EVENT	ALERT	SITE AREA EMERGENCY	GENERAL EMERGENCY
HU1 Natural or Destructive Phenomena Affecting the PROTECTED AREA. *Op. Modes: All*	**HA1** Natural or Destructive Phenomena Affecting a Plant VITAL AREA. *Op. Modes: All*		
HU2 FIRE Within PROTECTED AREA Boundary Not Extinguished In Less Than 15 Minutes of Detection OR EXPLOSION within the PROTECTED AREA Boundary. *Op. Modes: All*	**HA2** FIRE or EXPLOSION Affecting the Operability of Plant Safety Systems Required to Establish or Maintain Safe Shutdown. *Op. Modes: All*		
HU3 Release of Toxic, Corrosive, Asphyxiant, or Flammable Gases Deemed Detrimental to NORMAL PLANT OPERATIONS. *Op. Modes: All*	**HA3** Access To a VITAL AREA Is Prohibited Due To Release of Toxic, Corrosive, Asphyxiant or Flammable Gases Which Jeopardizes Operation of Systems Required to Maintain Safe Operations or Safely Shutdown the Reactor *Op. Modes: All*		
HU4 Confirmed SECURITY CONDITION or Threat Which Indicates a Potential Degradation in the Level of Safety of the Plant. *Op. Modes: All*	**HA4** HOSTILE ACTION within the OWNER CONTROLLED AREA or Airborne Attack Threat *Op Modes: All*	**HS4** HOSTILE ACTION within the PPROTECTED AREA *Op Modes: All*	**HG1** HOSTILE ACTION Resulting in Loss Of Physical Control of the Facility. *Op. Modes: All*
HU5 Other Conditions Existing Which in the Judgment of the Emergency Director Warrant Declaration of a NOUE. *Op. Modes: All*	**HA6** Other Conditions Existing Which in the Judgment of the Emergency Director Warrant Declaration of an Alert. *Op. Modes: All*	**HS3** Other Conditions Existing Which in the Judgment of the Emergency Director Warrant Declaration of Site Area Emergency. *Op. Modes: All*	**HG2** Other Conditions Existing Which in the Judgment of the Emergency Director Warrant Declaration of General Emergency. *Op. Modes: All*
	HA5 Control Room Evacuation Has Been Initiated. *Op. Modes: All*	**HS2** Control Room Evacuation Has Been Initiated and Plant Control Cannot Be Established. *Op. Modes: All*	

Initiating Condition -- NOTIFICATION OF UNUSUAL EVENT

Natural or Destructive Phenomena Affecting the PROTECTED AREA.

Operating Mode Applicability: All

Threshold Value: (1 or 2 or 3 or 4)

1. Seismic event identified by any 2 of the following: Deleted: TWO
   - Earthquake felt in plant
   - Seismic event confirmed by [TBD acceleration greater than recording trigger setpoint]
   - National Earthquake Center

2. Tornado striking within the PROTECTED AREA boundary or high winds greater than [110 mph].

3. Internal flooding greater than [12 inches] above floor level in the following areas that has the potential to effect safety related equipment:
   - Reactor Building
   - Control Building
   - Turbine Building

4. Shutdown of the facility required due to actual or predicted natural phenomenon, in accordance with [0POP04-ZO-0002, Natural or Destructive Phenomena Guidelines].

Basis:

These Thresholds are categorized on the basis of the occurrence of an event of sufficient magnitude to be of concern to plant operators.

Threshold 1: Damage may be caused to some portions of the site, but should not affect ability of safety functions to operate. [*The ground acceleration greater than the trigger for the seismic instrumentation to start recording or the first alarm setpoint should be used for this indication. DCD 3.7.4.2 - The seismic instrumentation system is triggered by the accelerometer signals. The actuating level should be adjustable for a minimum of 0.005g to 0.2g. The trigger is actuated whenever the acceleration exceeds 0.01g. The initial setpoint may be changed (but shall not exceed 0.02g) once sufficient plant operating data have been obtained which indicate that a different setpoint would provide better system operation.*]

The National Earthquake Center can confirm if an earthquake has occurred in the area of the plant.

Threshold 2 is based on the assumption that a tornado striking (touching down) or high winds within the PROTECTED AREA may have potentially damaged plant structures containing functions or systems required for safe shutdown of the plant. The high wind greater than [110 mph] value is based on the FSAR design basis wind speed. [DCD3.3.1.1] [*as long as it is within the range of the instrumentation available for wind speed.*] If such damage is confirmed visually or by other in-plant indications, the event may be escalated to Alert.

[*NEI 99-01 Threshold 4 - Not applicable – [DCD 3.5.1.1.1.3 Main Steam Turbine - Acceptance Criteria 1 of SRP Section 3.5.1.3 considers a plant with a favorable turbine generator placement and orientation and adhering to the guidelines of Regulatory Guide 1.115 adequately protected against turbine missile hazards. Further, this criterion specifies that exclusions of safety-related structures, systems or components from low trajectory turbine missile strike zones constitutes adequate protection against low trajectory turbine missiles. The turbine generator placement and orientation of the ABWR Standard Plant meets the guidelines of Regulatory Guide 1.115 as illustrated in Figure 3.5-2*.]

Threshold 3 addresses the effect of flooding caused by internal events such as component failures, equipment misalignment, or outage activity mishaps.

Threshold 4 is other phenomena that can also be precursors of more serious events. The actions taken when [0POP04-ZO-0002, Natural or Destructive Phenomena Guidelines] requires the facility to shutdown warrants this classification.

Initiating Condition -- NOTIFICATION OF UNUSUAL EVENT

FIRE Within the PROTECTED AREA Boundary Not Extinguished Within 15 Minutes of Detection OR EXPLOSION within PROTECTED AREA Boundary.

Operating Mode Applicability: All

Threshold Value: (1 or 2)

Note: The Emergency Director should not wait until the applicable time has elapsed, but should declare the event as soon as it is determined that the condition will likely exceed the applicable time.

1. FIRE not extinguished in less than 15 minutes of control room notification or verification of a control room FIRE alarm in any of the following areas:

   - Reactor Building
   - Control Building

2. EXPLOSION within Protected Area boundary.

Basis:

The purpose of this IC is to address the magnitude and extent of FIRES or EXPLOSIONS that may be potentially significant precursors to damage to safety systems.

For Threshold 1, as used here, detection is visual observation and report by plant personnel or sensor alarm indication. The 15 minute time period begins with a credible notification that a FIRE is occurring, or indication of a VALID fire detection system alarm/actuation. Verification of a fire detection system alarm includes actions that can be taken within the control room or other nearby site-specific location to ensure that the alarm is not spurious. An alarm is assumed to be an indication of a FIRE unless it is disproved within the 15 minute period by personnel dispatched to the scene.

Deleted: verified

The intent of this 15 minute duration is to size the FIRE and to discriminate against small FIRES that are readily extinguished. The buildings listed are buildings that contain safety related systems and components. [DCD Table 3.2-1]

For Threshold 2 only those EXPLOSIONS of sufficient force to damage permanent structures or equipment (see EXPLOSION definition) within the PROTECTED AREA should be considered. No attempt is made in this Threshold to assess the actual magnitude of the damage. The occurrence of the EXPLOSION is sufficient for declaration. The Emergency director also needs to consider any security aspects of the EXPLOSION, if applicable.

Escalation to a higher emergency class is by IC HA2, "FIRE or EXPLOSION Affecting the Operability of Plant Safety Systems Required to Establish or Maintain Safe Shutdown."

HU3

Initiating Condition – NOTIFICATION OF UNUSUAL EVENT

Release of Toxic, Corrosive, Asphyxiant, or Flammable Gases Deemed Detrimental to NORMAL PLANT OPERATIONS.

Operating Mode Applicability: All

Threshold Values: (1 or 2)

1. Toxic, corrosive, asphyxiant or flammable gases in amounts that have could adversely affect NORMAL PLANT OPERATIONS.

2. Report by Local, County or State Officials for evacuation or sheltering of site personnel based on an off-site event.

Deleted: Report or detection of t

Deleted: entered or

Deleted: enter the site area boundary in amounts that can

Basis:

This IC is based on the existence of uncontrolled releases of toxic or flammable gas that may enter the site boundary and affect NORMAL PLANT OPERATIONS. It is intended that releases of toxic, corrosive, asphyxiant or flammable gases are of sufficient quantity, and the release point of such gases is such that NORMAL PLANT OPERATIONS would be affected. The fact that SCBA may be worn does not eliminate the need to declare the event.

An Asphyxiant is a gas capable of reducing the level of oxygen in the body to dangerous levels. Most commonly, asphyxiants work by merely displacing air in an enclosed environment. This reduces the concentration of oxygen below the normal level of around 19%, which can lead to breathing difficulties, unconsciousness or even death.

Escalation of this Threshold is via HA3, which involves a quantified release of toxic or flammable gas affecting VITAL AREAS.

Initiating Condition – NOTIFICATION OF UNUSUAL EVENT

Confirmed SECURITY CONDITION or Threat Which Indicates a Potential Degradation in the Level of Safety of the Plant.

Operating Mode Applicability: All

Threshold Values: (1 or 2 or 3)

1. A SECURITY CONDITION that does NOT involve a HOSTILE ACTION as reported by the Security Supervisor.

2. A credible site specific security threat notification.

3. A validated notification from NRC providing information of an aircraft threat.

Basis:

Security events which do not represent a potential degradation in the level of safety of the plant are reported under 10 CFR 73.71 or in some cases under 10 CFR 50.72. Security events assessed as HOSTILE ACTIONS are classifiable under HA8HA4, HS4 and HG1.

A higher initial classification could be made based upon the nature and timing of the security threat and potential consequences. The licensee shall consider upgrading the emergency response status and emergency classification level in accordance with the site's Safeguards Contingency Plan and Emergency Plan.

Reference is made to the Security Supervisor because these individuals are the designated personnel on-site qualified and trained to confirm that a security event is occurring or has occurred. Training on security event classification confirmation is closely controlled due to the strict secrecy controls placed on the Safeguards Contingency Plan.

Threshold 1 is based on the Safeguards Contingency Plan. Site specific Safeguards Contingency Plans are based on guidance provided by NEI 03-12.

Threshold 2 is to ensure that appropriate notifications for the security threat are made in a timely manner. This includes information of a credible threat.

Threshold 3 is to ensure that notifications for the aircraft threat are made in a timely manner and that Off-site Response Organizations and plant personnel are at a state of heightened awareness regarding the credible threat. This Threshold is met when a plant receives information regarding an aircraft threat from NRC. Should the threat involve an airliner (airliner is meant to be a large aircraft with the potential for causing significant damage to the plant) then escalation to Alert via HA4 would be appropriate if the airliner is less than 30 minutes away from the plant. The NRC Headquarters Operations Officer (HOO) will communicate to the licensee if the threat involves an airliner. The status and size of the plane may be provided by NORAD through the NRC.

Formatted: Bases, Space After: 0 pt

Deleted: Security events which do not represent a potential degradation in the level of safety of the plant, are reported under 10 CFR 73.71 or in some cases under 10 CFR 50.72. Security events assessed as HOSTILE ACTIONS are classifiable under HA4, HS4 and HG1.¶
¶
[*Security contingencies for threats of HOSTILE ACTION and specific non-HOSTILE ACTION and are classified by these Thresholds.*] ¶

Escalation to Alert emergency classification level would be via HA4 would be appropriate if the threat involves an airliner within 30 minutes of the plant.

Deleted: It is not the intent of this Threshold to replace existing non-hostile related EALs involving aircraft.¶
¶
The determination of "credible" is made through use of information found in the Safeguards Contingency Plan.¶
¶
A higher initial classification could be made based upon the nature and timing of the security threat and potential consequences. Consider upgrading the emergency response status and emergency classification in accordance with the Safeguards Contingency Plan and Emergency Plan.

Initiating Condition – NOTIFICATION OF UNUSUAL EVENT

Other Conditions Existing Which in the Judgment of the Emergency Director Warrant Declaration of an Unusual Event.

Operating Mode Applicability: All

Threshold Value:

1. Other conditions exist which in the judgment of the Emergency Director indicate that events are in process or have occurred which indicate a potential degradation of the level of safety of the plant or indicate a security threat to facility protection has been initiated. No releases of radioactive material requiring off-site response or monitoring are expected unless further degradation of safety systems occurs.

Basis:

This Threshold addresses unanticipated conditions not addressed explicitly elsewhere but that warrant declaration of an emergency because conditions exist which are believed by the Emergency Director to fall under the UE emergency class.

Deleted: ¶
From a broad perspective, one area that may warrant Emergency Director judgment is related to likely or actual breakdown of site-specific event mitigating actions. Examples to consider include inadequate emergency response procedures, transient response either unexpected or not understood, failure or unavailability of emergency systems during an accident in excess of that assumed in accident analysis, or insufficient availability of equipment and/or support personnel.¶

HA1

Initiating Condition -- ALERT

Natural or Destructive Phenomena Affecting Plant VITAL AREAS.

Operating Mode Applicability: All

Threshold Values: (1 or 2 or 3 or 4 or 5)

1. a. Seismic event greater than Operating Basis Earthquake (OBE) as indicated by seismic instrumentation indication greater than [0.15g].

   AND

   b. Confirmed by EITHER:
   - Earthquake felt in plant,
   - National Earthquake Center

2. Tornado or high winds greater than [110 mph] resulting in VISIBLE DAMAGE to either of the following structures containing safety systems, or components **OR** Control Room indication of degraded performance of those safety systems.
   - Reactor Building
   - Control Building

3. Vehicle crash resulting in VISIBLE DAMAGE to either of the following structures containing safety systems, or components **OR** Control Room indication of degraded performance of those safety systems:
   - Reactor Building
   - Control Building

4. Internal flooding in any of the following structures that results in degraded safety system performance as indicated in the control room **OR** that creates industrial safety hazards that preclude access to operate or monitor safety equipment.
   - Reactor Building
   - Turbine Building
   - Control Building
   - Radwaste Building
   - Service Building

5. Natural or destructive phenomena resulting in VISIBLE DAMAGE to any of the following plant structures containing safety systems or components **OR** Control Room indication of degraded performance of those safety systems:
   - Reactor Building
   - Control Building

Deleted: areas of the plant

Deleted: equipment necessary for safe shutdown

Formatted: Bullets and Numbering

Basis:

These Thresholds escalate from HU1 in that the occurrence of the event has resulted in VISIBLE DAMAGE to plant structures or areas containing equipment necessary for a safe shutdown, or has caused damage to the safety systems in those structures evidenced by control room indications of degraded system response or performance. The occurrence of VISIBLE DAMAGE and/or degraded system response is intended to discriminate against lesser events. The initial "report" should not be interpreted as mandating a lengthy damage assessment prior to classification. No attempt is made in this Threshold to assess the actual magnitude of the damage. The significance here is not that a particular system or structure was damaged, but rather, that the event was of sufficient magnitude to cause this degradation. Escalation to a higher classification will be based on System Malfunction ICs.

Threshold 1 designates the design basis earthquake. Seismic events of this magnitude can result in a plant VITAL AREA being subjected to forces beyond design limits, and thus damage may be assumed to have occurred to plant safety systems. [DCD -19.H - The peak ground acceleration of the design earthquakes is 0.3g for the Safe Shutdown Earthquake (SSE). Extensive seismic soil-structure interaction analyses of the reactor building and control building complex were performed for a wide range of generic site conditions under a 0.3g SSE. The analysis results in terms of site-envelope SSE loads are presented in Appendix 3A. The standard plant designed to these site-envelope seismic loads may result in significant design margins when it is situated at a specific site, particularly a soft soil site. Thus, the seismic capacities estimated from the site-envelope design requirements may be very conservative for certain sites.
DCD 3.7 - The operating basis earthquake (OBE) is not a design requirement. The effects of low level earthquake (lesser magnitude than the SSE) on fatigue evaluation and plant shutdown criteria are addressed in Subsections 3.7.3.2 and 3.7.4.4, respectively. DCD 20.2.2(2) - The SSAR gives an OBE (PGA) value of 0.10g and states that, “for conservatism, a value of 0.15 g is employed to evaluate structural and component responses in Chapter 3.” The staff, however, considers the OBE value to be 0.15g as per criterion 2 of 10CFR50 Appendix A and paragraph V of 10CFR100 Appendix A which require, in part, that for seismic design considerations the OBE shall be no less than one-half of the SSE.

For classification purposes, the seismic setpoints are as follows:
0.01g = seismic recording trigger
0.15g = Operating Basis Earthquake (OBE = 1/2 SSE)
0.30g = Safe Shutdown Earthquake (SSE)]

Threshold 2 is based on the FSAR design basis wind speed of [110 mph]. Wind loads of this magnitude can cause damage to safety functions.

Threshold 3 addresses vehicle crashes within PROTECTED AREA that results in VISIBLE DAMAGE to VITAL AREAS or results in indication of damage to safety structures, systems, or components containing functions and systems required for safe shutdown of the plant.

[*NEI 99-01 threshold 4 - Not applicable – [DCD 3.5.1.1.1.3 Main Steam Turbine - Acceptance Criteria 1 of SRP Section 3.5.1.3 considers a plant with a favorable turbine generator placement and orientation and adhering to the guidelines of Regulatory Guide 1.115 adequately protected against turbine missile hazards. Further, this criterion specifies that exclusions of safety-related structures, systems or components from low trajectory turbine missile strike zones constitutes adequate protection against low trajectory turbine missiles. The turbine generator placement and orientation of the ABWR Standard Plant meets the guidelines of Regulatory Guide 1.115 as illustrated in Figure 3.5-2*.]

Threshold 4 addresses the effect of internal flooding that has resulted in degraded performance of systems affected by the flooding, or has created industrial safety hazards (e.g., electrical shock) that preclude necessary access to operate or monitor safety equipment. The inability to access,

operate or monitor safety equipment represents a potential for substantial degradation of the level of safety of the plant. This flooding may have been caused by internal events such as component failures, equipment misalignment, or outage activity mishaps.

Threshold 5 is other phenomena causing VISIBLE DAMAGE that can be precursors of more serious events.

Initiating Condition -- ALERT

FIRE or EXPLOSION Affecting the Operability of Plant Safety Systems Required to Establish or Maintain Safe Shutdown.

Operating Mode Applicability: All

Threshold Value:

1. FIRE or EXPLOSION resulting in VISIBLE DAMAGE to any of the following structures containing safety systems, or components **OR** Control Room indication of degraded performance of those safety systems:

   - Reactor Building
   - Control Building

Basis:

The reference to damage of systems is used to identify the magnitude of the FIRE / EXPLOSION and to discriminate against minor FIRES / EXPLOSIONS. The reference to safety systems is included to discriminate against FIRES / EXPLOSIONS in areas having a low probability of affecting safe operation. The significance here is not that a safety system was degraded but the fact that the FIRE / EXPLOSION was large enough to cause damage to these systems.

The inclusion of a "VISIBLE DAMAGE" should not be interpreted as mandating a lengthy damage assessment prior to classification. No attempt is made in this Threshold to assess the actual magnitude of the damage. The occurrence of the EXPLOSION with reports of evidence of damage is sufficient for declaration. The Emergency Director also needs to consider any security aspects of the EXPLOSIONS.

Escalation to a higher emergency class, if appropriate, will be based on System Malfunction, Fission Product Barrier Degradation, Abnormal Rad Levels / Radiological Effluent, or Emergency Director Judgment ICs.

Initiating Condition -- ALERT

Access to a VITAL AREA Is Prohibited Due To Release of Toxic, Corrosive, Asphyxiant or Flammable Gases Which Jeopardizes Operation of Systems Required to Maintain Safe Operations or Safely Shutdown the Reactor.

Operating Mode Applicability: All

Threshold Values:

1. Access to a VITAL AREA is prohibited due to toxic, corrosive, asphyxiant, or flammable gases which jeopardizes operation of systems required to maintain safe operations or safely shutdown the reactor.

Deleted: report or detection of

Basis:

Gases in a Vital Area can affect the ability to safely operate or safely shutdown the reactor.

Escalation to a higher emergency class, if appropriate, will be based on System Malfunction, Fission Product Barrier Degradation, Abnormal Rad Levels / Radioactive Effluent, or Emergency Director Judgment ICs.

The fact that SCBA may be worn does not eliminate the need to declare the event.

An Asphyxiant is a gas capable of reducing the level of oxygen in the body to dangerous levels. Most commonly, asphyxiants work by merely displacing air in an enclosed environment. This reduces the concentration of oxygen below the normal level of around 19%, which can lead to breathing difficulties, unconsciousness or even death.

Flammable gasses, such as hydrogen and acetylene, are routinely used to maintain plant systems (hydrogen) or to repair equipment/components (acetylene - used in welding). This Threshold addresses concentrations at which gases can ignite/support combustion. An uncontrolled release of flammable gasses within a facility structure has the potential to affect safe operation of the plant by limiting either operator or equipment operations due to the potential for ignition and resulting equipment damage/personnel injury.

HA4

Initiating Condition -- ALERT

HOSTILE ACTION within the OWNER CONTROLLED AREA or Airborne Attack Threat

Operating Mode Applicability: All

Example Emergency Action Level: (1 or 2)

A HOSTILE ACTION is occurring or has occurred within the OWNER CONTROLED AREA as reported by the Security Supervisor.

A validated notification from NRC of an airliner attack threat within 30 minutes of the site.

Deleted: less than

Deleted: away

Basis:

Threshold 1 addresses the potential for a very rapid progression of events due to a HOSTILE ACTION. [*This EAL is not intended to address incidents that are accidental or acts of civil disobedience, such as hunters or physical disputes between employees within the OCA or PA. That initiating condition is adequately addressed by other EALs.*]

Threshold 2 ensures that notifications for the airliner attack threat are made in a timely manner and that Off-site Response Organizations and plant personnel are at a state of heightened awareness regarding the credible threat. [*Validation is performed by calling the NRC or by other approved methods of authentication.*] Only the plant to which the specific threat is made need declare the Alert. This Threshold is met when a plant receives information regarding an airliner attack threat from NRC and the airliner is less than 30 minutes away from the plant. This IC/Threshold addresses the immediacy of an expected threat arrival or impact on the site within a relatively short time. The fact that the site is an identified attack target with minimal time available for further preparation requires a heightened state of readiness and implementation of protective measures that can be effective (on-site evacuation, dispersal or sheltering) before arrival or impact.

These Thresholds address the contingency for a very rapid progression of events due to an airborne HOSTILE ACTION [*such as that experienced on September 11, 2001*] and the possibility for additional attacking aircraft. It is not intended to address accidental small aircraft impact as that initiating condition is adequately addressed by HU4. The Thresholds are not premised solely on the potential for a radiological release. Rather the issue includes the need for assistance due to the possibility for significant and indeterminate damage from additional air, land or water attack elements. [*Although vulnerability analyses show nuclear plants to be robust, it is appropriate for Off-site Response Organizations to be notified and to activate in order to be better prepared to respond should protective actions become necessary. If not previously notified by NRC that the aircraft impact was intentional, then it would be expected, although not certain, that notification by an appropriate Federal agency would follow. In this case, appropriate federal agency is intended to be NORAD, FBI, FAA or NRC. However, the declaration should not be unduly delayed awaiting Federal notification.*]

[*Organizations to be notified and encouraged to activate (if they do not normally) to be better prepared should it be necessary to consider further actions*.] Airliner is meant to be a large aircraft with the potential for causing significant damage to the plant. The status and size of the plane may be provided by NORAD through the NRC.

Initiating Condition -- ALERT

Control Room Evacuation Has Been Initiated.

Operating Mode Applicability: All

Threshold Value:

1. [TBD procedure] requires control room evacuation.

Basis:

With the control room evacuated, additional support, monitoring and direction through the Technical Support Center and/or other emergency response facilities is necessary. Inability to establish plant control from outside the control room will escalate this event to a Site Area Emergency.

Initiating Condition -- ALERT

Other Conditions Existing Which in the Judgment of the Emergency Director Warrant Declaration of an Alert.

Operating Mode Applicability: All

Threshold Value:

1. Other conditions exist which in the judgment of the Emergency Director indicate that events are in process or have occurred which involve actual or potential substantial degradation of the level of safety of the plant or a security event that involves probable life threatening risk to site personnel or damage to site equipment because of HOSTILE ACTION. Any releases are expected to be limited to small fractions of the EPA Protective Action Guideline exposure levels.

Basis:

This Threshold addresses unanticipated conditions not addressed explicitly elsewhere but that warrant declaration of an emergency because conditions exist which are believed by the Emergency Director to fall under the Alert emergency class.

Initiating Condition -- SITE AREA EMERGENCY

Control Room Evacuation Has Been Initiated and Plant Control Cannot Be Established.

Operating Mode Applicability: All

Threshold Value:

1. Control room evacuation has been initiated.

AND

Control of the plant cannot be established within 15 minutes.

Deleted: in less than

Basis:

Expeditious transfer of safety systems has not occurred and fission product barrier damage may not yet be indicated. The intent of this IC is to capture those events where control of the plant cannot be reestablished in a timely manner. [*Site-specific time for transfer based on analysis or assessments as to how quickly control must be reestablished without core uncovering and/or core damage. This time should not exceed 15 minutes without additional justification.*] The determination of whether or not control is established at the remote shutdown panel is based on Emergency Director (ED) judgment. The Emergency Director is expected to make a reasonable, informed judgment within the site-specific time for transfer that the licensee has control of the plant from the remote shutdown panel.

The intent of the Threshold is to establish control of important plant equipment and knowledge of important plant parameters in a timely manner. Primary emphasis should be placed on those components and instruments that supply protection for and information about safety functions. These safety functions are reactivity control (ability to shutdown the reactor and maintain it shutdown), reactor water level (ability to cool the core), and decay heat removal (ability to maintain a heat sink).

Escalation of this event, if appropriate, would be by Fission Product Barrier Degradation, Abnormal Rad Levels/Radiological Effluent, or Emergency Director Judgment ICs.

Initiating Condition -- SITE AREA EMERGENCY

Other Conditions Existing Which in the Judgment of the Emergency Director Warrant Declaration of Site Area Emergency.

Operating Mode Applicability: All

Threshold Value:

1. Other conditions exist which in the judgment of the Emergency Director indicate that events are in process or have occurred which involve actual or likely major failures of plant functions needed for protection of the public or HOSTILE ACTION that results in intentional damage or malicious acts; (1) toward site personnel or equipment that could lead to the likely failure of or; (2) that prevent effective access to equipment needed for the protection of the public. Any releases are not expected to result in exposure levels which exceed EPA Protective Action Guideline exposure levels beyond the site boundary.

Basis:

This Threshold addresses unanticipated conditions not addressed explicitly elsewhere but that warrant declaration of an emergency because conditions exist which are believed by the Emergency Director to fall under the emergency class description for Site Area Emergency.

Initiating Condition -- SITE AREA EMERGENCY

A HOSTILE ACTION within the PPROTECTED AREA

Operating Mode Applicability: All

Threshold Value:

1. A HOSITLE ACTION is occurring or has occurred within the PROTECTED AREA as reported by the Security Supervisor.

Basis:

This condition represents an escalated threat to plant safety above that contained in the Alert IC in that a HOSTILE FORCE has progressed from the Owner Controlled Area to the PROTECTED AREA.

This Threshold addresses the potential for a very rapid progression of events due to a dedicated attack. It is not intended to address incidents that are accidental or acts of civil disobedience.

This Threshold is not premised solely on the potential for a radiological release. Rather the issue includes the need for assistance due to the possibility for significant and indeterminate damage from additional attack elements.

This Threshold addresses the immediacy of a threat to impact site VITAL AREAS within a relatively short time. The fact that the site is under serious attack with minimal time available for additional assistance to arrive requires ORO readiness and preparation for the implementation of protective measures.

Consider upgrading the classification to a General Emergency based on actual plant status after impact.

HG1

Initiating Condition -- GENERAL EMERGENCY

HOSTILE ACTION Resulting in Loss of Physical Control of the Facility.

Operating Mode Applicability: All

Threshold Value: (1 or 2)

1. A HOSTILE ACTION has occurred such that plant personnel are unable to operate equipment required to maintain safety functions.

2. A HOSTILE ACTION has caused failure of Spent Fuel Cooling Systems and IMMINENT fuel damage is likely for a freshly off-loaded reactor core in pool.

Basis:

This IC encompasses conditions under which a HOSTILE FORCE has taken physical control of VITAL AREAS required to maintain safety functions and control of that equipment cannot be transferred to and operated from another location.

Threshold 1 addresses safety functions which are reactivity control (ability to shut down the reactor and keep it shutdown), reactor water level (ability to cool the core), and decay heat removal (ability to maintain a heat sink). If control of the plant equipment necessary to maintain safety functions can be transferred to another location, then the above initiating condition is not met.

Deleted: These safety functions

Loss of physical control of the control room or remote shutdown capability alone may not prevent the ability to maintain safety functions per se. [*Design of the remote shutdown capability and the location of the transfer switches should be taken into account. Primary emphasis should be placed on those components and instruments that supply protection for and information about safety functions.*]

Threshold 2 addresses loss of physical control of spent fuel cooling systems if IMMINENT fuel damage is likely (e.g., freshly off-loaded reactor core in pool).

Deleted: Loss of physical control of the control room or remote shutdown capability alone may not prevent the ability to maintain safety functions per se.

Initiating Condition -- GENERAL EMERGENCY

Other Conditions Existing Which in the Judgment of the Emergency Director Warrant Declaration of General Emergency.

Operating Mode Applicability: All

Threshold Value:

1. Other conditions exist which in the judgment of the Emergency Director indicate that events are in process or have occurred which involve actual or IMMINENT substantial core degradation or melting with potential for loss of containment integrity or HOSTILE ACTION that results in an actual loss of physical control of the facility. Releases can be reasonably expected to exceed EPA Protective Action Guideline exposure levels off-site for more than the immediate site area.

Basis:

This Threshold addresses unanticipated conditions not addressed explicitly elsewhere but that warrant declaration of an emergency because conditions exist which are believed by the Emergency Director to fall under the General Emergency class.

Recognition Category S - System Malfunctions

UNUSUAL EVENT	ALERT	SITE AREA EMERGENCY	GENERAL EMERGENCY
SU1 Loss of All Off-site AC Power to Emergency Busses for 15 Minutes Or Longer. *Op. Modes: Power Operation, Startup, Hot Shutdown*	**SA5** AC Power Capability To Emergency Busses Reduced To A Single Power Source For 15 Minutes Or Longer Such That Any Additional Single Failure Would Result In Station Blackout. *Op. Modes: Power Operation, Startup, Hot Shutdown*	**SS1** Loss of All Off-site and All On-site AC Power to Emergency Busses For 15 Minutes Or Longer. *Op. Modes: Power Operation, Startup, Hot Shutdown*	**SG1** Prolonged Loss of All Off-site l On-site AC Power to Emergency Busses. *Op. Modes: Power Operation, Startup, Hot Shutdown*
SU2 Inability to Reach Required Shutdown Within Technical Specification Limits. *Op. Modes: Power Operation, Startup, Hot Shutdown*	**SA2** Automatic Scram Fails to Shutdown the Reactor and the Manual Actions Taken From the Reactor Control Console are Successful in Shutting Down the Reactor *Op. Modes: Power Operation, Startup*	**SS2** Automatic Scram Fails to Shutdown the Reactor and Manual Actions Taken From the Reactor control Console are NOT Successful in Shutting Down the Reactor *Op. Modes: Power Operation, Startup*	**SG2** Automatic Scram and All Manual Actions Fail to Shutdown the Reactor and Indication of an Extreme Challenge to the Ability to Cool the Core Exists. *Op. Modes: Power Operation, Startup*
	SA4 UNPLANNED Loss of Indicating, Monitoring and Control Functions. *Op. Modes: Power Operation, Startup, Hot Shutdown*	**SS6** Inability to Monitor a SIGNIFICANT TRANSIENT in Progress. *Op. Modes: Power Operation, Startup, Hot Shutdown*	
SU4 Fuel Clad Degradation. *Op. Modes: Power Operation, Startup, Hot Shutdown*		**SS3** Loss of All Vital DC Power For 15 Minutes Or Longer.. *Op. Modes: Power Operation, Startup, Hot Shutdown*	
SU5 RCS Leakage. *Op. Modes: Power Operation, Startup, Hot Shutdown*			
SU6 UNPLANNED Loss of All On-site or Off-site Communications Capabilities. *Op. Modes: Power Operation, Startup, Hot Shutdown*			
SU8 Inadvertent Criticality. *Op Modes: Hot Shutdown*			

Deleted: Greater Than

Deleted: Greater Than

SYSTEM MALFUNCTION

SU1

Initiating Condition -- NOTIFICATION OF UNUSUAL EVENT

Loss of All Off-site AC Power to Emergency Busses for 15 Minutes Or Longer.

Deleted: Greater Than

Operating Mode Applicability: Power Operation
Startup
Hot Shutdown

Threshold Value:

Note: The Emergency Director should not wait until the applicable time has elapsed, but should declare the event as soon as it is determined that the condition will likely exceed the applicable time.

Formatted: Font: 11 pt, Italic

Formatted: Font: Italic

Formatted: Indent: Left: 0", Hanging: 0.5", Space After: 0 pt

1. Loss of all off-site AC power to [3(4)A3, 3(4)B3 AND 3(4)C3] busses for 15 minutes or longer.

Deleted: greater than

Basis:

Prolonged loss of off-site AC power reduces required redundancy and potentially degrades the level of safety of the plant by rendering the plant more vulnerable to a complete Loss of AC Power (e.g., Station Blackout). Fifteen minutes was selected as a threshold to exclude transient or momentary losses of off-site power.

SU2

Initiating Condition -- NOTIFICATION OF UNUSUAL EVENT

Inability to Reach Required Shutdown Within Technical Specification Limits.

Operating Mode Applicability: Power Operation
Startup
Hot Shutdown

Threshold Value:

1. Plant is not brought to required operating mode within Technical Specifications LCO Action Statement Time.

Basis:

Limiting Conditions of Operation (LCOs) require the plant to be brought to a required shutdown mode when the Technical Specification required configuration cannot be restored. Depending on the circumstances, this may or may not be an emergency or precursor to a more severe condition. In any case, the initiation of plant shutdown required by the site Technical Specifications requires a four hour report under 10 CFR 50.72 (b) Non-emergency events. The plant is within its safety envelope when being shut down within the allowable action statement time in the Technical Specifications. An immediate UE is required when the plant is not brought to the required operating mode within the allowable action statement time in the Technical Specifications. Declaration of a UE is based on the time at which the LCO-specified action statement time period elapses under the site Technical Specifications and is not related to how long a condition may have existed.

SU4

Initiating Condition -- NOTIFICATION OF UNUSUAL EVENT

Fuel Clad Degradation

Operating Mode Applicability: Power Operation
Startup
Hot Shutdown

Threshold Values: (1 or 2)

1. Fuel clad degradation greater than Technical Specification allowable limits as indicated by either:
   - MSL Radiation monitor greater than [value TBD]
   - Offgas Pre-Treatment radiation monitor grater than [value TBD]

2. Coolant sample activity value indicating fuel clad degradation greater:
   - Dose equivalent I-131 specific activity less than or equal to [0.25 uCi/ml]
   - Gross specific activity less than or equal to [100/Ē uCi/ml]

Basis:

This IC is included as a UE because it is considered to be a potential degradation in the level of safety of the plant and a potential precursor of more serious problems.

Threshold 1 addresses site-specific radiation monitor readings that provide indication of fuel clad integrity.

threshold 2 addresses coolant samples exceeding coolant technical specifications for iodine spike.

Escalation of this IC to the Alert level is via the Fission Product Barrier ICs.

Initiating Condition -- NOTIFICATION OF UNUSUAL EVENT

RCS Leakage.

Operating Mode Applicability: Power Operation
Startup
Hot Shutdown

Threshold Values: (1 or 2)

1. Unidentified or pressure boundary leakage greater than [10 gpm].

2. Identified leakage greater than [65 gpm].

Basis:

This IC is included as a UE because it may be a precursor of more serious conditions and, as result, is considered to be a potential degradation of the level of safety of the plant. The 10 gpm value for the unidentified and pressure boundary leakage was selected as it is observable with normal control room indications. Lesser values must generally be determined through time-consuming surveillance tests (e.g., mass balances). The value is 10X Technical specification Limit of 1.0 gpm. [Technical Specification 3.4.3]

Relief valve normal operation should be excluded from this IC. However, a relief valve that operates and fails to close per design should be considered applicable to this IC if the relief valve cannot be isolated. An emergency declaration is not appropriate for the opening or cycling of an SRV when no other emergency condition exists.

The Threshold for identified leakage is set at a higher value due to the lesser significance of identified leakage in comparison to unidentified or pressure boundary leakage. In either case, escalation of this IC to the Alert level is via Fission Product Barrier Degradation ICs. The value is 2.5X Technical Specification total average leakage Limit of 26 gpm. [Technical Specification 3.4.3]

Initiating Condition -- NOTIFICATION OF UNUSUAL EVENT

UNPLANNED Loss of All On-site or Off-site Communications Capabilities.

Operating Mode Applicability: Power Operation
Startup
Hot Shutdown

Threshold Values: (1 or 2)

1. Loss of all of the following routine on-site communication methods affecting the ability to perform routine operations.
   - [TBD]

2. Loss of all of the following routine off-site communications methods affecting the ability to inform state and local authorities of plant problems.
   - [TBD]

Basis:

The purpose of this IC and its associated thresholds is to recognize a loss of communications capability that either defeats the plant operations staff ability to perform routine tasks necessary for plant operations or the ability to communicate problems with off-site authorities. [*The loss of off-site communications ability is expected to be significantly more comprehensive than the condition addressed by 10 CFR 50.72.*]

The availability of one method of ordinary off-site communications is sufficient to inform state and local authorities of plant problems. This Threshold is intended to be used only when extraordinary means (e.g., relaying of information from radio transmissions, individuals being sent to off-site locations, etc.) are being utilized to make communications possible.

[*Site-specific list for on-site communications loss must encompass the loss of all means of routine communications (e.g., commercial telephones, sound powered phone systems, page party system and radios / walkie talkies).*

Site-specific list for off-site communications loss must encompass the loss of all means of communications with off-site authorities. This should include the ENS, commercial telephone lines, telecopy transmissions, and dedicated phone systems.]

Initiating Condition -- NOTIFICATION OF UNUSUAL EVENT

Inadvertent Criticality.

OPERATING MODE APPLICABILITY Hot Shutdown

Threshold Value:

1. An UNPLANNED sustained positive period observed on nuclear instrumentation.

Basis:

This IC addresses inadvertent criticality events. This IC indicates a potential degradation of the level of safety of the plant, warranting a UE classification. This IC excludes inadvertent criticalities that occur during planned reactivity changes associated with reactor startups (e.g., criticality earlier than estimated).

Escalation would be by the Fission Product Barrier Matrix, as appropriate to the operating mode at the time of the event, or by Emergency Director Judgment.

SA2

Initiating Condition -- ALERT

Automatic Scram Fails to Shutdown the Reactor AND the Manual Actions Taken from the Reactor Control Console are Successful in Shutting Down the Reactor

Operating Mode Applicability: Power Operation
Startup

Threshold Value:

1. a. An Automatic scram failed to shutdown the reactor

   AND

   b. Manual actions taken at the reactor control console successfully shutdown the reactor as indicated by power level less than [5% (APRM downscale trip)].

Basis:

A manual actuation is any set of actions by the reactor operator(s) at the reactor control console which causes or should cause control rods to be rapidly inserted into the core and shuts down the reactor.

[*If the manual scram switches on the control room console panels are considered an automatic input into the Reactor Protection System, a failure to scram (trip) without any other automatic input would make this threshold applicable. DCD 7.2.1.1.4.2 Initiating Circuits, (11), Operator initiated Manual Scram, implies that the manual actions are an input to the RPS.*]

If actions taken at the reactor control console fail to shutdown the plant, the event would escalate to a Site Area Emergency.

This condition indicates failure of the automatic protection system to scram the reactor. This condition is more than a potential degradation of a safety system in that a front line automatic protection system did not function in response to a plant transient. Thus the plant safety has been compromised because design limits of the fuel may have been exceeded.

SYSTEM MALFUNCTION

SA4

Initiating Condition -- ALERT

UNPLANNED Loss of Indicating, Monitoring and Control Functions.

Operating Mode Applicability: Power Operation
Startup
Hot Shutdown

Threshold Value:

1. Loss of any two Divisions of ELCS.

Basis:

This IC and its associated Threshold are intended to recognize the difficulty associated with monitoring changing plant conditions without the logical functions associated with the ESF Logic and Control System. [*Some logics and controls will be affected by loss of two divisions.*]

"Planned" loss of ELCS includes scheduled maintenance and testing activities.

This Alert will be escalated to a Site Area Emergency if the operating crew cannot monitor the transient in progress.

SA5

Initiating Condition -- ALERT

AC Power Capability To Emergency Busses Reduced To A Single Power Source For 15 minutes Or Longer Such That Any Additional Single Failure Would Result In Station Blackout.

Deleted: Greater Than

Operating Mode Applicability: Power Operation
Startup
Hot Shutdown

Threshold Value:

Note: The Emergency Director should not wait until the applicable time has elapsed, but should declare the event as soon as it is determined that the condition will likely exceed the applicable time.

1. a. AC power capability to [3(4)A3, 3(4)B3 AND 3(4)C3] busses reduced to a single power source for 15 minutes or longer

Deleted: greater than

AND

b. Any additional single failure will result in station blackout.

Basis:

The condition indicated by this IC is the degradation of the off-site and on-site power systems such that any additional single failure would result in a station blackout.

The subsequent loss of this single power source would escalate the event to a Site Area Emergency in accordance with IC SS1, "Loss of All Off-site and All On-site AC Power to Emergency Busses."

SYSTEM MALFUNCTION

SS1

Initiating Condition -- SITE AREA EMERGENCY

Loss of All Off-site and All On-Site AC Power to Emergency Busses For 15 Minutes Or Longer.

Operating Mode Applicability: Power Operation
Startup
Hot Shutdown

Threshold Value:

Note: The Emergency Director should not wait until the applicable time has elapsed, but should declare the event as soon as it is determined that the condition will likely exceed the applicable time.

1. Loss of all Off-Site and all On-Site AC Power to [3(4)A3, 3(4)B3 AND 3(4)C3] busses for 15 minutes or longer.

Deleted: greater than

Basis:

Loss of all AC power compromises all plant safety systems requiring electric power. Prolonged loss of all AC power will cause core uncovering and loss of containment integrity, thus this event can escalate to a General Emergency.

Escalation to General Emergency is via Fission Product Barrier Degradation or IC SG1, "Prolonged Loss of All Off-site Power and Prolonged Loss of All On-site AC Power."

SYSTEM MALFUNCTION

SS2

Initiating Condition -- SITE AREA EMERGENCY

Automatic Scram Fails to Shutdown the Reactor AND Manual Actions Taken from the Reactor Control Console are NOT Successful in Shutting Down the Reactor

Operating Mode Applicability: Power Operation
Startup

Threshold Value:

1. a. An Automatic scram failed to shutdown the reactor,

   AND

   b. Manual actions taken at the reactor control console DO NOT shutdown the reactor as indicated by power level greater than [5% (APRM downscale trip)]

Basis:

Automatic and manual actuation is not considered successful if action away from the Reactor Control Console is required to scram the reactor. If actions taken away from the Reactor Control Console are successful in shutting the reactor down, this Threshold is still warranted because the design limits of the fuel may have been exceeded.

A manual actuation is any set of actions by the reactor operator(s) at the Reactor Control Console which causes or should cause control rods to be rapidly inserted into the core and brings the reactor subcritical.

Under these conditions, the reactor is producing more heat than the maximum decay heat load for which the safety systems are designed. A Site Area Emergency is indicated because conditions exist that lead to IMMINENT loss or potential loss of both fuel clad and RCS.

Escalation of this event to a General Emergency would be due to a prolonged condition leading to challenges in maintaining core-cooling or heat sink.

Initiating Condition -- SITE AREA EMERGENCY

Loss of All Vital DC Power For 15 Minutes Or Longer.

Operating Mode Applicability: Power Operation
Startup
Hot Shutdown

Threshold Value:

Note: The Emergency Director should not wait until the applicable time has elapsed, but should declare the event as soon as it is determined that the condition will likely exceed the applicable time.

1. Less than [TBD bus voltage] on [3(4)P007A, 3(4)P007B, 3(4)P007C AND 3(4)P007D] for 15 minutes or longer.

Deleted: greater than

Basis:

Loss of all DC power compromises ability to monitor and control plant safety functions. Prolonged loss of all DC power will cause core uncovering and loss of containment integrity when there is significant decay heat and sensible heat in the reactor system.

[*(Site-specific) bus voltage should be based on the minimum bus voltage necessary for the operation of safety related equipment. This voltage value should incorporate a margin of at least 15 minutes of operation before the onset of inability to operate those loads. This voltage is usually near the minimum voltage selected when battery sizing is performed. Typically the value for the entire battery set is approximately 105 VDC. For a 60 cell string of batteries the cell voltage is typically 1.75 Volts per cell. For a 58 string battery set the minimum voltage is typically 1.81 Volts per cell.*]

Escalation to a General Emergency would occur by Abnormal Rad Levels/Radiological Effluent, Fission Product Barrier Degradation, or Emergency Director Judgment ICs. Fifteen minutes was selected as a threshold to exclude transient or momentary power losses.

SYSTEM MALFUNCTION

SS6

Initiating Condition -- SITE AREA EMERGENCY

Inability to Monitor a SIGNIFICANT TRANSIENT in Progress.

Operating Mode Applicability: Power Operation
Startup
Hot Shutdown

Threshold Value:

1. a. A SIGNIFICANT TRANSIENT is in progress.

   AND

   b. Loss of any three Divisions of ELCS.

Basis:

A Site Area Emergency is warranted if the control room staff has limited logic, control and monitoring capability of safety functions needed for protection of the public while a SIGNIFICANT TRANSIENT is in progress.

Initiating Condition -- GENERAL EMERGENCY

Prolonged Loss of All Off-site and All On-Site AC Power to Emergency Busses.

Operating Mode Applicability: Power Operation
Startup
Hot Shutdown

Threshold Value:

1. a. Loss of all off-site and all on-site AC power to [3(4)A3, 3(4)B3 AND 3(4)C3] busses.

AND

Formatted: Left

b. **Either** of the following:

- Restoration of at least one emergency bus in less than [2] hours is not likely
- Indication of continuing degradation of core cooling based on Fission Product Barrier monitoring.

Basis:

Loss of all AC power compromises all plant safety systems requiring electric power. Prolonged loss of all AC power will lead to loss of fuel clad, RCS, and containment. The 2 hour value is based on RCIC being able to perform core cooling function without AC power for at least 2 hours. [DCD 5.4.6.1]

This IC is specified to assure that in the unlikely event of a prolonged station blackout, timely recognition of the seriousness of the event occurs and that declaration of a General Emergency occurs as early as is appropriate, based on a reasonable assessment of the event trajectory.

The likelihood of restoring at least one emergency bus should be based on a realistic appraisal of the situation since a delay in an upgrade decision based on only a chance of mitigating the event could result in a loss of valuable time in preparing and implementing public protective actions.

Although it may be difficult to predict when power can be restored, it is necessary to give the Emergency Director a reasonable idea of how quickly (s)he may need to declare a General Emergency based on two major considerations:

1. Are there any present indications that core cooling is already degraded to the point that Loss or Potential Loss of Fission Product Barriers is IMMINENT?

2. If there are no present indications of such core cooling degradation, how likely is it that power can be restored in time to assure that a loss of two barriers with a potential loss of the third barrier can be prevented?

Thus, indication of continuing core cooling degradation must be based on Fission Product Barrier monitoring with particular emphasis on Emergency Director judgment as it relates to IMMINENT Loss or Potential Loss of fission product barriers and degraded ability to monitor fission product barriers.

SYSTEM MALFUNCTION

SG2

Initiating Condition -- GENERAL EMERGENCY

Automatic Scram and All Manual Actions Fail to Shutdown the Reactor AND Indication of an Extreme Challenge to the Ability to Cool the Core Exists.

Operating Mode Applicability: Power Operation
Startup

Threshold Value:

1. a. An automatic scram failed to shutdown the reactor.

Deleted: and ALL Manual actions

AND

b. All manual actions DO NOT shutdown the reactor as indicated by power level greater than [5% (APRM downscale trip)]

AND

c. Either of the following exist or have occurred due to continued power generation:

- RPV water level less than [-31 inches] Minimum Steam Cooling RPV Water Level
- RPV pressure and suppression pool temperature cannot be maintained below the HCTL

Basis:

Under the conditions of this Threshold, the efforts to bring the reactor subcritical are unsuccessful to the extent that the reactor is producing more heat than the maximum decay heat load for which the safety systems were designed. This situation could be a precursor for a core melt sequence.

In the event either of these challenges exists at a time that the reactor has not been brought below the power associated with the Safety System Design (5% (APRM downscale trip) a core melt sequence exists. In this situation, core degradation can occur rapidly. For this reason, the General Emergency declaration is intended to be anticipatory of the fission product barrier matrix declaration to permit maximum off-site intervention time.