NOTES:

1. ALL EQUIPMENT AND DEVICE NUMBERS SHOWN ON THIS DIAGRAM ARE PREFIXED BY C12- UNLESS OTHERWISE NOTED.
2. REFER TO THE RCIS IBD (C11-1030) FOR ROD MOVEMENT CONTROL LOGIC OTHER THAN HYDRAULIC SCRAM.
3. THE CRD SYSTEM SHALL BE DESIGNED IN ACCORDANCE WITH THE DESIGN SPECIFICATION C12-4010.
4. UNLESS OTHERWISE NOTED, ALL CONTROL SWITCHES SHALL BE THREE-POSITION SWITCHES WITH "CLOSE"-"NORMAL"-"OPEN" SPRING RETURN TO "NORMAL" FROM "CLOSE" OR "OPEN".
5. BOTH VALVE POSITION INDICATION LIGHTS SHALL BE "ON" WHEN VALVE IS NOT FULLY CLOSED OR NOT FULLY OPEN. RED LIGHT SHALL BE "ON" FOR FULLY OPEN VALVE AND GREEN LIGHT SHALL BE "ON" FOR FULLY CLOSED VALVED.
6. UNLESS NOTED OTHERWISE, THE STANDARD LOGIC CONVENTION (I.E., ENERGIZE TO TRIP) IS UTILIZED IN THIS DIAGRAM.
7. THE TOTAL NUMBER OF TRANSFER POINTS USED IN THIS DIAGRAM IS 4.
8. THE SCRAM CIRCUIT DIAGRAM IS SHOWN WITH NORMAL "NO TRIP" CONDITIONS OF OPERATION. TRIP CONDITIONS RESULT FROM LOGIC "LOW" STATES OR LOSS OF SIGNAL (FAIL SAFE) FROM THE REACTOR PROTECTION SYSTEM (C71).
9. FMCRD A AND FMCRD B ARE THE TWO DRIVES ASSOCIATED WITH THE SAME HCU.
10. THE LOGIC AND VALVE POSITION INDICATION LIGHTS SHOWN INSIDE THE DASHED LINES MAY BE LOCATED EITHER IN THE RCIS PANELS IN THE REACTOR BUILDING OR IN THE HCU ASSEMBLY.
11. AN ALTERNATE SWITCH DESIGN MAY BE SELECTED IF JUSTIFIED BY MAN-MACHINE INTERFACE CONSIDERATIONS.

SH NO.	TITLE
1	COVER/CONTENTS/NOTES
2	CONTROL ROD DRIVE PUMP C001A(B)
3	CRD PUMP C001A(B) AUXILIARY OIL PUMP
3	SCRAM CIRCUIT
4	AIR HEADER DUMP VALVES F041 AND F042
5	ANNUNCIATORS
6	FLOW CONTROL VALVE F010A(B)
7	CRD PURGE WATER MAKE-UP VALVE D004-143
8	ARI VALVES F043, F044, F047, F048A(B), F049A(B)

SUPPLEMENTAL DOCUMENTS UNDER THE FOLLOWING IDENTITIES ARE TO BE USED IN CONJUNCTION WITH THIS DRAWING.

		MPL NO.
1.	CONTROL ROD DRIVE SYSTEM, P&ID	C12-1010
2.	CONTROL ROD DRIVE SYSTEM, DESIGN SPEC	C12-4010
3.	REACTOR PROTECTION SYSTEM, IBD	C71-1030
4.	ROD CONTROL AND INFORMATION SYS, IBD	C11-1030
5.	RECIRCULATION FLOW CONTROL SYS, IBD	C81-1030
6.	~~NON-ESSENTIAL MULTIPLEXING SYS~~, IBD	H23-1030
7.	ROD CONTROL AND INFORMATION SYS, IED	C11-1040

Plant Data Network (PDN)

LEGEND:

(BL) - BLUE LIGHT

LOPP - LOSS OF PREFERRED POWER

MPL NO C12-1030

FIGURE 7.7-4 CONTROL ROD DRIVE SYSTEM IBD (SHEET 1 of 8)

SH	TITLE
1	CONTENTS, NOTES AND SUPPLEMENTAL DOCUMENTS
2	LOCAL/PGC CONTROL LOGIC
2	MANUAL SIGNALS TO SSLC ATWS MITIGATION LOGIC
3	PUMP START INHIBIT LOGIC, STABILITY CONTROL AND PROTECTION LOGIC
4	REACTOR INTERNAL PUMP (RIP) TRIP LOGIC
5	RIP A SPEED DEMAND M/A STATION
6	GANG SPEED DEMAND M/A STATION
7	AUTO LOAD FOLLOWING (ALF) CONTROL M/A STATION
8	RECIRCULATION FLOW RUNBACK LOGIC
9	RATE DECREASE LIMIT LOGIC LOCK UP RINGBACK LOGIC DMC CONTROLLER FAILURE

APR

SUPPLEMENTAL DOCUMENTS UNDER THE FOLLOWING IDENTITIES ARE TO BE USED IN CONJUNCTION WITH THIS DRAWING:

	MPL NO.
1. RECIRCULATION FLOW CONTROL SYS IED	C81-1010
2. PROCESS COMPUTER SYS IED	C91-1010
3. MAIN CONTROL ROOM PANEL ARGMT	H11-4050
4. REACTOR RECIRC SYS P&ID	B31-1010
5. STEAM BYPASS & PRESSURE CONTROL SYS IBD	C85-1030
6. REACTOR WATER CLEANUP SYS P&ID	G31-1010
7. REACTOR PROTECTION SYS IBD	C71-1030
8. NUCLEAR BOILER SYS P&ID	B21-1010
9. NEUTRON MONITORING SYS IBD	C51-1030
10. CONDENSATE, FEEDWATER, & CONDENSATE AIR EXTRACTION SYS P&ID	N21-1010
11. FEEDWATER CONTROL SYS IBD	C31-1030
12. ROD CONTROL & INFORMATION SYS IBD	C11-1030
13. AUTOMATIC POWER REGULATOR	C82-1010

PLANT COMPUTER FUNCTION

NOTES:

1. LOCAL CONTROL ALLOWS THE OPERATOR TO EITHER MANUALLY MANIPULATE DEMAND SIGNALS OR PLACE THEM IN AUTOMATIC CONTROL AT MANUAL STATIONS. PGC SYSTEM CONTROL MODE ALLOWS THE COMPUTER TO MANIPULATE DEMAND SIGNALS AT M/A STATIONS OR PLACE THEM IN AUTOMATIC CONTROL.

2. RIPS ARE INDIVIDUALLY RUNBACK AND THEN TRIPPED (AFTER MINIMUM SPEED IS REACHED) WHEN THIS CONDITION IS SATISFIED. THE INDIVIDUAL RIP RUNBACK LIMIT WHICH IS INVOKED HERE HAS PRECEDENT OVER THE GANG RUNBACK LIMIT ON SHEET 6.

3. THE PUSH BUTTON SWITCH (PBS) SENDS A LOGICAL "1" SIGNAL FOR AT LEAST ONE COMPLETE SAMPLING PERIOD.

4. THE WIDE RANGE DOME PRESSURE SIGNAL IS VALIDATED BY THE STEAM BYPASS AND PRESSURE CONTROL SYSTEM FROM THREE INDEPENDENT PRESSURE SENSOR INPUTS.

5. THE REMAINING FOUR OR SIX RIPS WILL BE RUNBACK TO MINIMUM SPEED AFTER A TRIP OF THE OTHER SIX OR FOUR. THIS WILL ENHANCE GANG RIP RESTART CAPABILITIES.

6. SATISFACTION OF THE RECIRC RUNBACK CONDITION WILL ENABLE THE APPROPIATE RECIRC RUNBACK LIMIT FROM THE LOW VALUE GATE. THIS LIMIT WILL BE SENT THROUGH LOW VALUE GATE 2 (SHOWN ON RFC IED C81-1010, SHEET 2, DETAIL "A") WHICH WILL SEND THE RUNBACK LIMIT TO THE GANG OF ASDS IF IT IS LOWER THAN THE CURRENT GANG SPEED DEMAND. AFTER A RECIRC RUNBACK, THE GANG SPEED DEMAND WILL BE UPDATED TO EQUAL THE OUTPUT OF LOW VALUE GATE 2. THUS IF THE RUNBACK LIMIT PASSES THROUGH LOW VALUE GATE 2, THE GANG SPEED DEMAND WILL REMAIN EQUAL TO THE RUNBACK LIMIT AFTER THE RUNBACK CONDITION IS DISABLED.

7. THIS BLOCK SYMBOL REPRESENTS THE MULTIPLICATION OF INPUT SIGNALS. IN THIS APPLICATION, THE ANALOG SPEED SIGNALS ARE MULTIPLIED BY THE DISCRETE SIGNALS. IF THE DISCRETE SIGNAL IS A LOGICAL "1", THE SPEED SIGNAL IS PASSED ON THE AVERAGING FUNCTION. IF THE DISCRETE SIGNAL IS LOW "0", THE SPEED SIGNAL IS NOT PASSED.

AND TOUCH SCREEN BUTTON (TSB)

SEND

MPL NO. C81-1030

FIGURE 7.7-7 RECIRCULATION FLOW CONTROL SYSTEM IBD (Sheet 1 of 9)

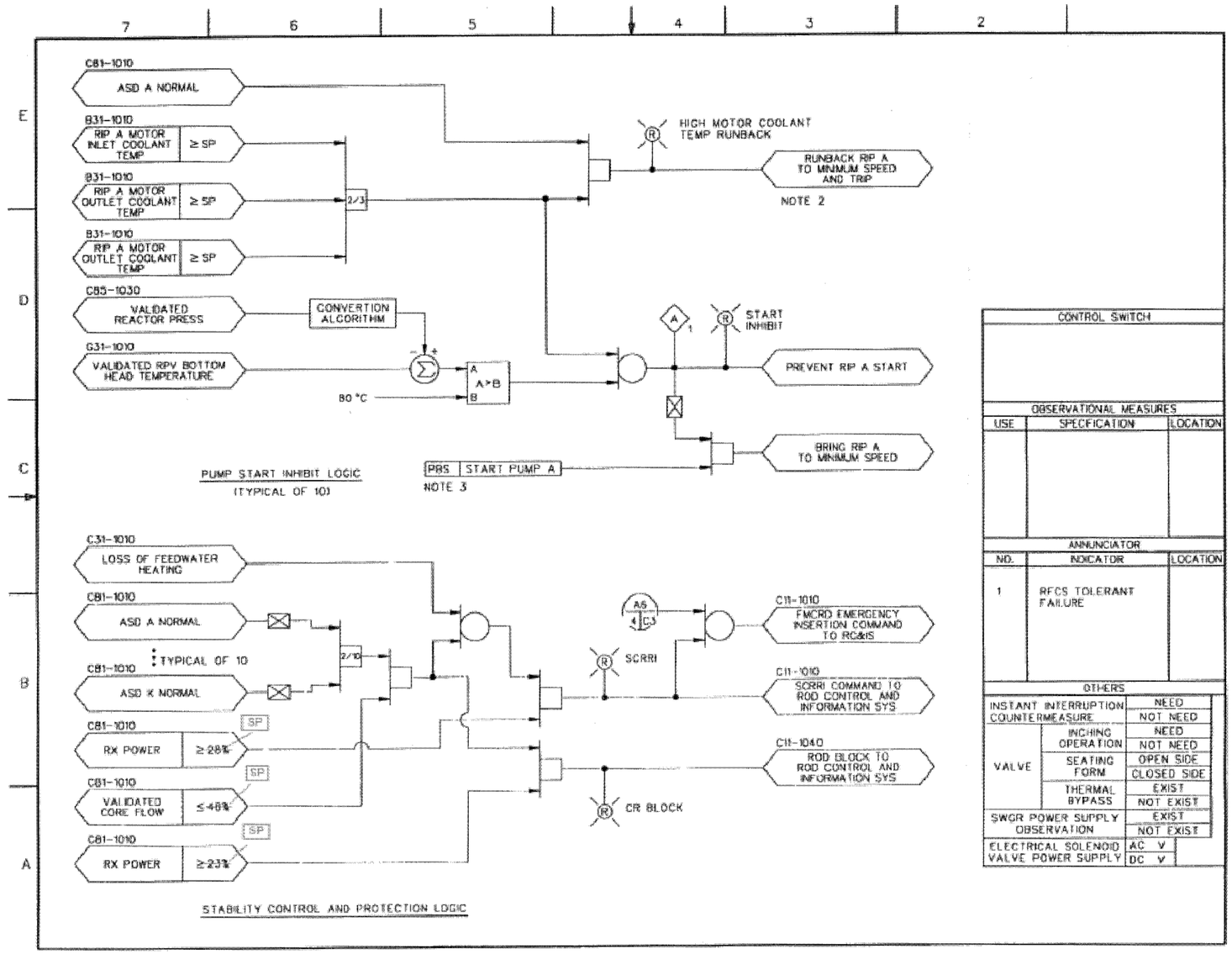

FIGURE 7.7-7 RECIRCULATION FLOW CONTROL SYSTEM IBD (Sheet 3 of 9)

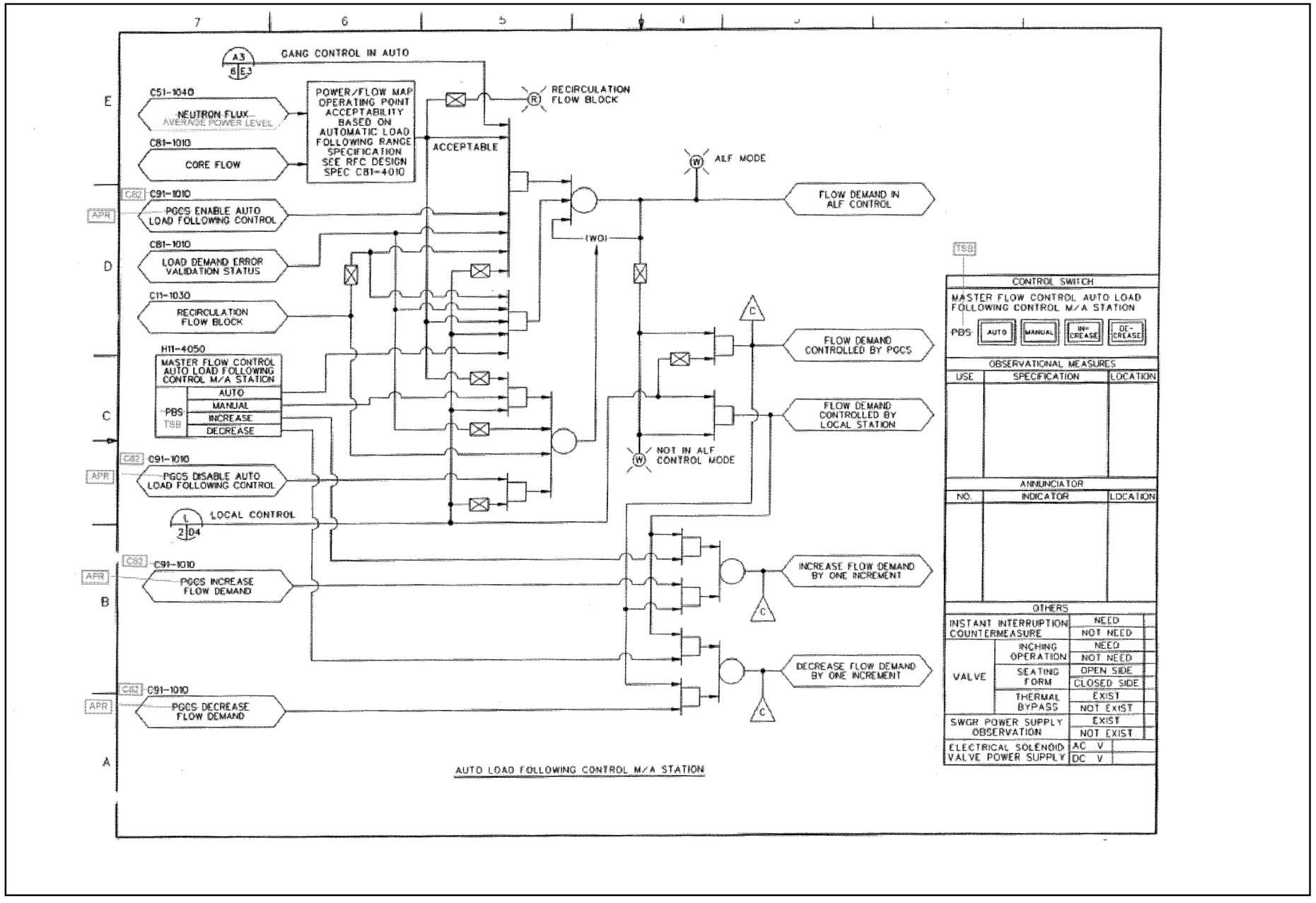

FIGURE 7.7-7 RECIRCULATION FLOW CONTROL SYSTEM IBD (Sheet 7 of 9)

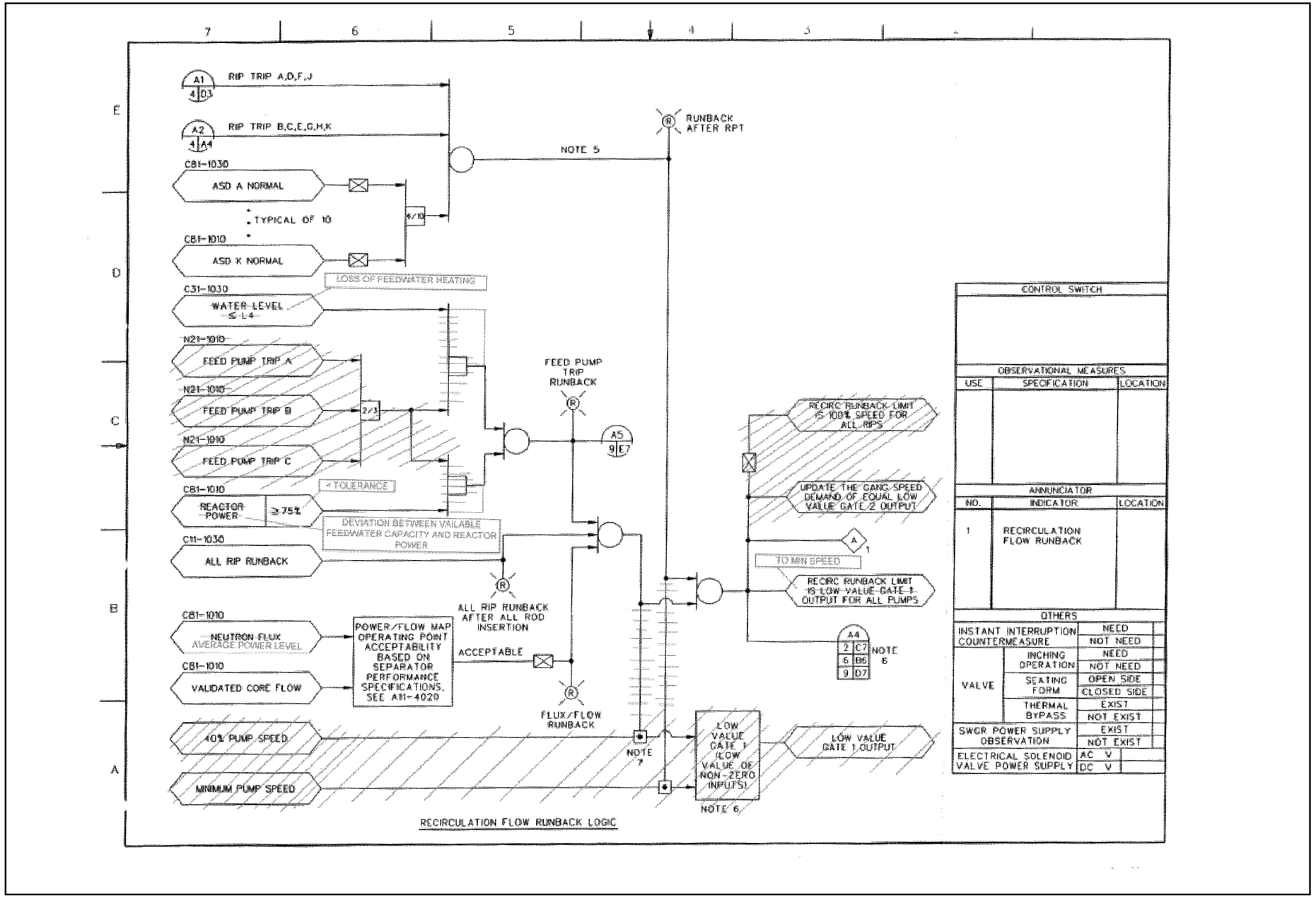

FIGURE 7.7-7 RECIRCULATION FLOW CONTROL SYSTEM IBD (Sheet 8 of 9)

NOTES

1. ~~EACH DIGITAL MEASUREMENT~~ AND CONTROL (DMC) CHANNEL WILL RECEIVE ~~THREE INPUTS ONE FROM EACH MUX INTERFACE UNIT REPRESENTING EACH HEAD CHANNEL~~ FOR EACH INPUT SIGNAL WHICH IS SHOWN ON THE IED. SOME INPUT SIGNAL TRAINS ON THE IED REPRESENT SIGNALS FROM MORE THAN ONE SENSOR (i.e. THE NARROW RANGE WATER LEVEL WHICH HAS THREE SENSORS). IN THIS CASE, THE SINGLE IED INPUT TRAIN REPRESENTS ONE SIGNAL PER SENSOR TO EACH DMC CHANNEL. SEE DETAIL "B".

2. MULTIPLE OPERATOR INTERFACE COMMANDS ARE REPRESENTED BY THIS SIGNAL. THESE COMMANDS ARE LISTED BELOW. SEE THE FEEDWATER CONTROL SYSTEM IBD FOR MORE DETAIL.
   A. FEEDWATER CONTROL LOCAL/PGC CONTROL SELECTION (2 SIGNALS)
   B. 3E/4E MODE SELECTION (2 SIGNALS)
   C. RFP A FLOW CONTROL MANUAL/AUTO SELECTION, INCREASE, DECREASE, FAST (5 SIGNALS)
   D. RFP B FLOW CONTROL MANUAL/AUTO SELECTION, INCREASE, DECREASE, FAST (5 SIGNALS)
   E. RFP C FLOW CONTROL MANUAL/AUTO SELECTION, INCREASE, DECREASE, FAST (5 SIGNALS)
   F. LFCV FLOW CONTROL MANUAL/AUTO, SELECTION, INCREASE, DECREASE, FAST (5 SIGNALS)
   G. CUW DUMP VALVE FLOW CONTROL MANUAL/AUTO SELECTION, INCREASE, DECREASE, FAST (5 SIGNALS)
   H. CUW DUMP VALVE LEVEL CONTROL AUTO/MANUAL SELECTION, INCREASE, DECREASE, FAST (5 SIGNALS)
   I. REACTOR WATER LEVEL SETPOINT INCREASE, DECREASE (2 SIGNALS)
   J. REACTOR WATER LEVEL SETPOINT SETDOWN RESET LOGIC.

ADD PUMP D

3. MULTIPLE PGCS SYSTEM INTERFACE COMMANDS ARE REPRESENTED BY THIS SIGNAL. THESE COMMANDS ARE LISTED BELOW. SEE THE FEEDWATER CONTROL SYSTEM IBD FOR MORE DETAIL.
   A. PGCS FUNCTION OPERATIONAL (1 SIGNAL)
   B. 3E/4E MODE SELECTION (2 SIGNALS)
   C. ENABLE/DISABLE RFP A AUTOMATIC FLOW CONTROL, INCREASE, DECREASE, FAST (5 SIGNALS)
   D. ENABLE/DISABLE RFP B AUTOMATIC FLOW CONTROL, INCREASE, DECREASE, FAST (5 SIGNALS)
   E. ENABLE/DISABLE RFP C AUTOMATIC FLOW CONTROL, INCREASE, DECREASE, FAST (5 SIGNALS)
   F. ENABLE/DISABLE LFCV FLOW CONTROL, INCREASE, DECREASE, FAST (5 SIGNALS)
   G. ENABLE/DISABLE CUW DUMP VALVE AUTOMATIC FLOW CONTROL, INCREASE, DECREASE, FAST (5 SIGNALS)
   H. ENABLE/DISABLE CUW DUMP VALVE AUTOMATIC LEVEL CONTROL, INCREASE, DECREASE, FAST (5 SIGNALS)

4. INTERCHANNEL COMMUNICATION LINKS ARE PROVIDED TO TRANSFER DATA BETWEEN PROCESSING CHANNELS. THESE ARE READ ONLY CONNECTIONS BETWEEN ~~EACH PAIR~~ OF DMC CHANNELS.

PDN

5. THE D/S AND A/S BUBBLES REPRESENT INDEPENDENT FIELD VOTER STATIONS WHICH ARE CONNECTED VIA ~~MUX~~ LINES TO THE ~~DMC~~ CHANNELS. THE D/S STATIONS RECEIVE THREE DISCRETE INPUTS AND OUTPUT ONE VOTED ON DISCRETE CONTACT CLOSURE OUTPUT. THE A/S STATIONS RECEIVE THREE DIGITAL REPRESENTATIONS OF ANALOG SIGNALS AND OUTPUT ONE VOTED ON ANALOG SIGNAL. SUFFIX R IN D/SR AND A/SR DENOTES THAT A RINGBACK SIGNAL IS SENT BACK TO THE PROCESS CONTROLLERS FOR VOTER FAILURE DETECTION.

6. THE D/SC AND A/SC BUBBLES REPRESENT MULTIPLE FUNCTIONS OF A SINGLE VOTER WHICH READS TRIPLICATED SIGNALS FROM THE ~~MUX~~ LINES AND VALIDATES A SINGLE INPUT SIGNAL FOR THE ~~PROCESS COMPUTER~~. THE D/SC FUNCTIONS RECEIVE THREE DISCRETE INPUTS AND OUTPUT ONE VOTED ON DISCRETE DIGITAL SIGNAL TO THE ~~PROCESS COMPUTER~~. THE A/SC FUNCTIONS RECEIVE THREE DIGITIZED ANALOG SIGNALS AND OUTPUT ONE VOTED ON DIGITIZED ANALOG SIGNAL.

PLANT COMPUTER FUNCTIONS

7. MULTIPLE CONTROLLER STATUS SIGNALS ARE REPRESENTED BY THIS SIGNAL TRAIN. THESE STATUS SIGNALS ARE LISTED BELOW.
   A. RFP A AUTO CONTROL ENABLED
   B. RFP B AUTO CONTROL ENABLED
   C. RFP C AUTO CONTROL ENABLED
   D. RFP A CONTROL IN AUTO /MANUAL/PGC (3 SIGNALS)
   E. RFP B CONTROL IN AUTO/MANUAL/PGC (3 SIGNALS)
   F. RFP C CONTROL IN AUTO/MANUAL/PGC (3 SIGNALS)
   G. LFCV CONTROL IN AUTO/MANUAL/PGC (3 SIGNALS)
   H. CUW DUMP VALVE FLOW CONTROL IN AUTO/MANUAL/PGC (3 SIGNALS)
   I. CUW DUMP VALVE LEVEL CONTROL IN AUTO/MANUAL/PGC (3 SIGNALS)

ADD PUMP D

8. RFP OPERATING STATUS SIGNALS RECEIVED FROM N22-1010 SHALL BE TRUE WHEN PUMP IS RUNNING ABOVE MINIMUM SPEED.

N22

9. ANNUNCIATOR (A) AND INDICATOR (I) TAKEOFFS GO TO THE MAIN CONTROL PANEL, H11-4050.

10. FEED PUMP FLOW LOOP M/A STATION LOGIC IS CONTAINED IN THE FEEDWATER CONTROL SYSTEM IBD, C31-1030.

11. MULTIPLE LOCKUP VOTER STATUS SIGNALS REPRESENTED BY THIS SIGNAL TRAIN.
   A. RFP A LOCKUP VOTER STATUS
   B. RFP B LOCKUP VOTER STATUS
   C. RFP C LOCKUP VOTER STATUS
   D. LFCV LOCKUP VOTER STATUS
   E. CUW DUMP VALVE LOCKUP VOTER STATUS

ADD PUMP D

12. FT TAG NUMBER SHOULD BE IN ACCORD WITH FE TAG NUMBER. IDENT NUMBERS OF FT ARE PRELIMINARY NUMBERS.

13. THE ADJUSTABLE SPEED DRIVES (ASDs) OUTPUT VARIABLE FREQUENCY AND VARIABLE VOLTAGE POWER TO THE RFP MOTORS. EACH ASD RECEIVES OPERATING STATUS SIGNALS DIRECTLY FROM THE OTHER ASDs. ASD OUTPUT IS MODULATED IN RESPONSE TO THE DEMAND SIGNAL FROM THE DMCs AND MAXIMUM OUTPUT IS LIMITED BASED ON THE NUMBER OF OPERATING ASDs. A LOCKUP SIGNAL RESULTS IN FIXED ASD OUTPUT AT THE FREQUENCY AND VOLTAGE AT THE TIME THE LOCKUP SIGNAL IS RECEIVED. A TRIP SIGNAL RESULTS IN THE REDUCTION OF ASD POWER OUTPUT TO ZERO. SEE THE FDWC SYSTEM DESIGN SPEC FOR DETAILS.

14. THE CUW DUMP VALVE CONTROL SCHEME CONSISTS OF TWO M/A STATIONS IN SERIES. THE FIRST M/A STATION PASSES THE MLC DEMAND WHEN IN AUTO OR GENERATES A FLOW DEMAND SIGNAL WHEN IN MANUAL MODE. THE SECOND M/A STATION PASSES THE CUW DUMP VALVE FLOW CONTROLLER DEMAND SIGNAL WHEN IN AUTO OR GENERATES A CUW DUMP VALVE POSITION DEMAND SIGNAL WHEN IN MANUAL MODE. THE FIRST M/A STATION IS IDENTIFIED AS THE "CUW DUMP VALVE LEVEL CONTROL M/A STATION" IN THE IBD. THE SECOND M/A STATION IS IDENTIFIED AS THE "CUW DUMP VALVE FLOW CONTROL M/A STATION" IN THE IBD. SEE DETAIL "C" AND THE IBD REF 1 FOR DETAILS.

SUPPLEMENTAL DOCUMENTS UNDER THE FOLLOWING IDENTITIES ARE TO BE USED IN CONJUNCTION WITH THIS DRAWING.

		REFERENCE DESIGNATOR
1.	FEEDWATER CONT SYS IBD	C31-1030
2.	NUCLEAR BOILER SYS P&ID	B21-1010
3.	REACTOR WATER CLEANUP SYSTEM P&ID	G31-1010
4.	TURBINE CONTROL SYSTEM IED	N32-1010
5.	PROCESS COMPUTER SYSTEM IED	C91-1010
6.	CONDENSATE, FEEDWATER AND CONDENSATE AIR EXTRACTION SYSTEM P&ID	N21-1010
7.	RECIRCULATION FLOW CONTROL SYSTEM IED	C81-1010
8.	MAIN CONTROL ROOM PANELS ARGMT	H11-4050
9.	NEUTRON MONITORING SYSTEM IED	C51-1010

MPL NO. C31-1010

FIGURE 7.7-8 FEEDWATER CONTROL SYSTEM IED (Sheet 1 of 3)

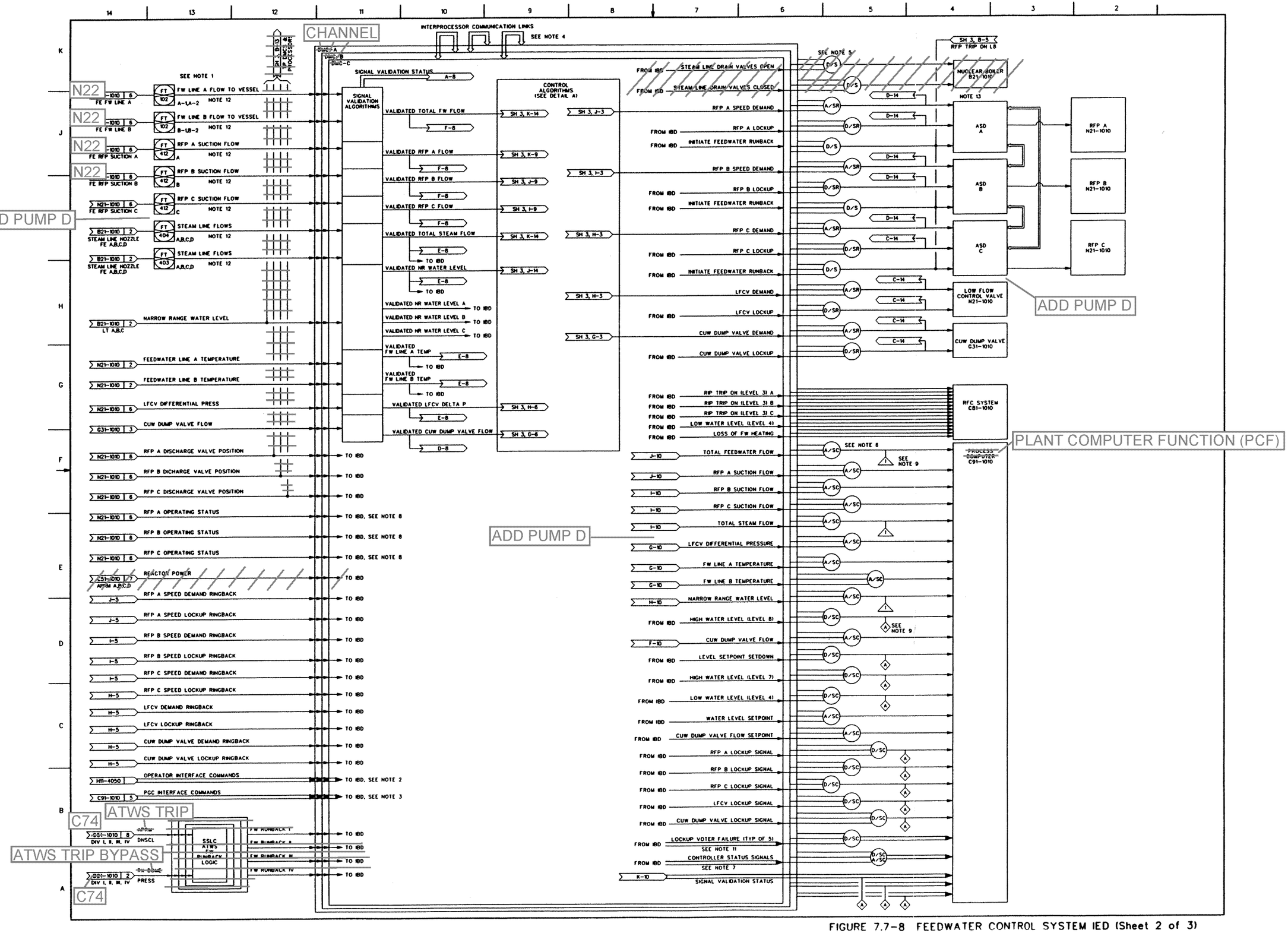

FIGURE 7.7-8 FEEDWATER CONTROL SYSTEM IED (Sheet 2 of 3)

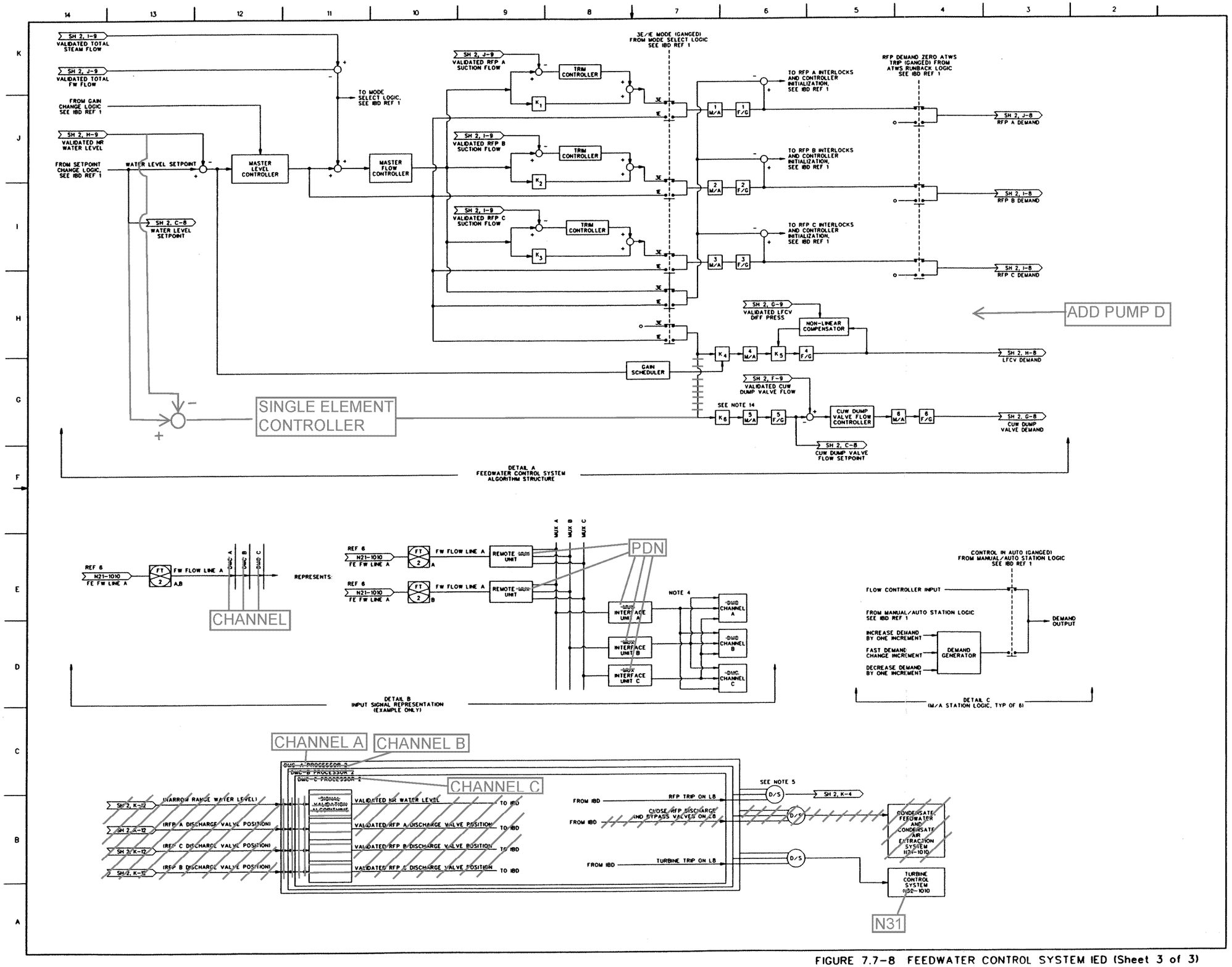

FIGURE 7.7-8 FEEDWATER CONTROL SYSTEM IED (Sheet 3 of 3)

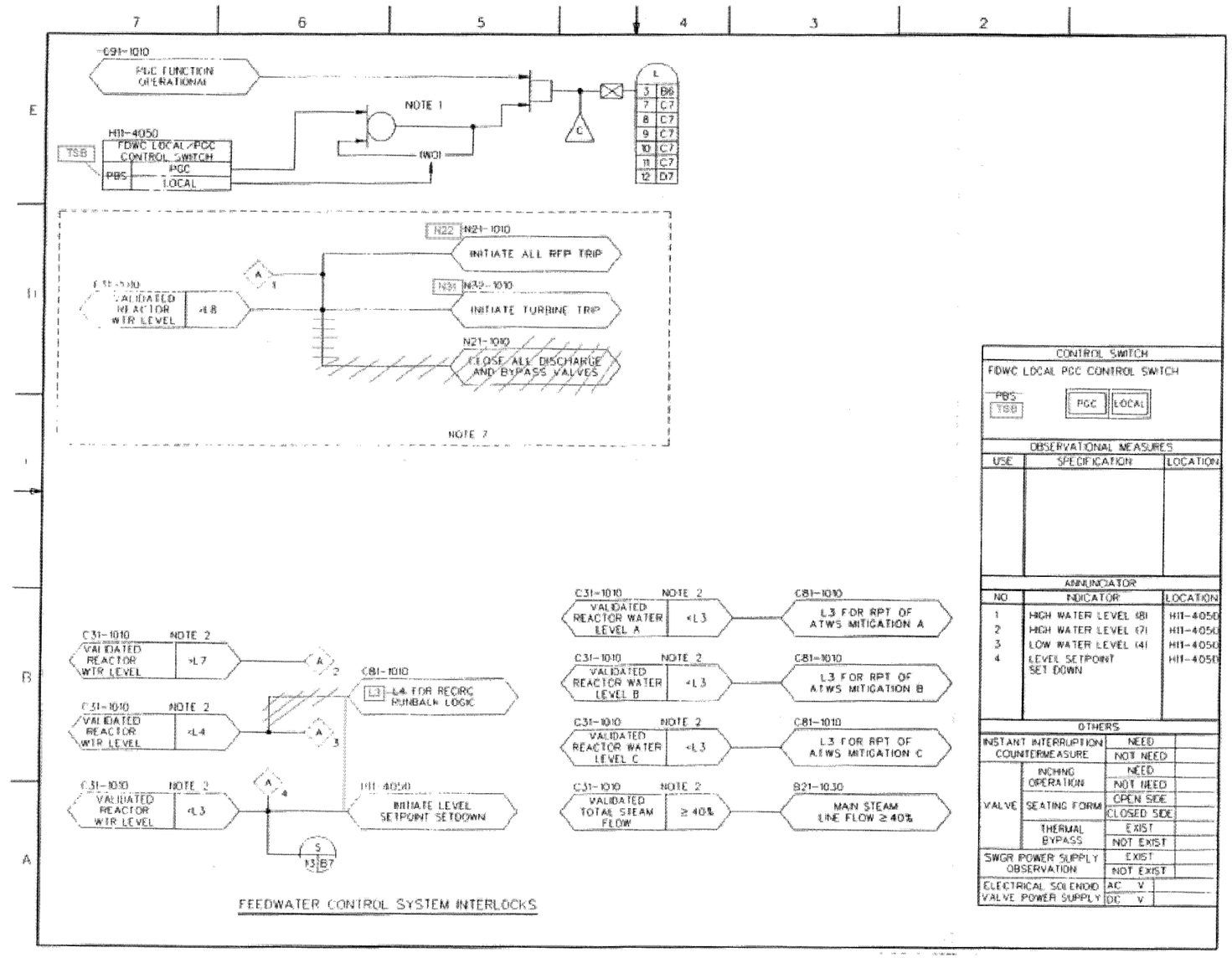

FIGURE 7.7-9 FEEDWATER CONTROL SYSTEM IBD (Sheet 2 of 14)

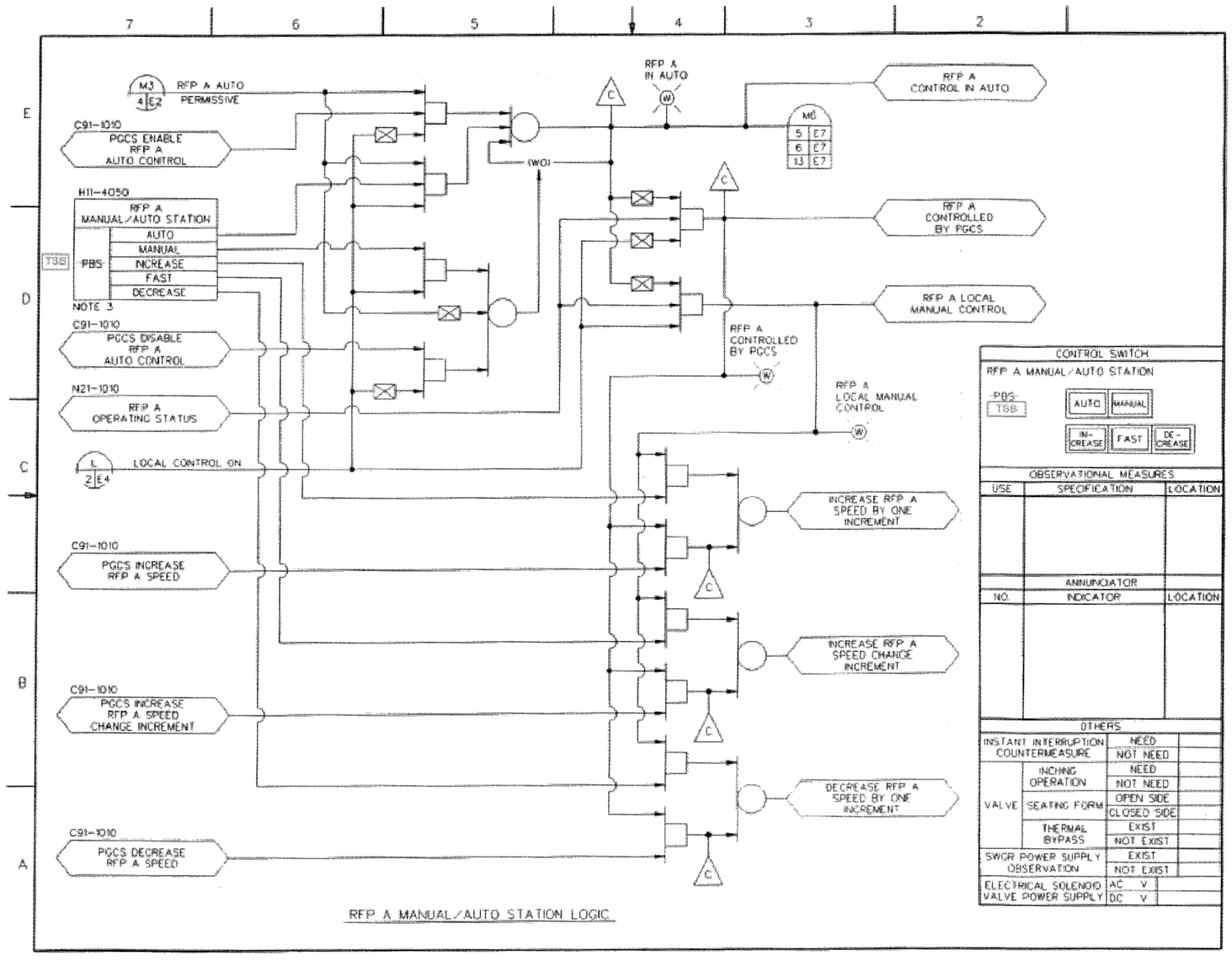

FIGURE 7.7-9 FEEDWATER CONTROL SYSTEM IBD (Sheet 7 of 14)

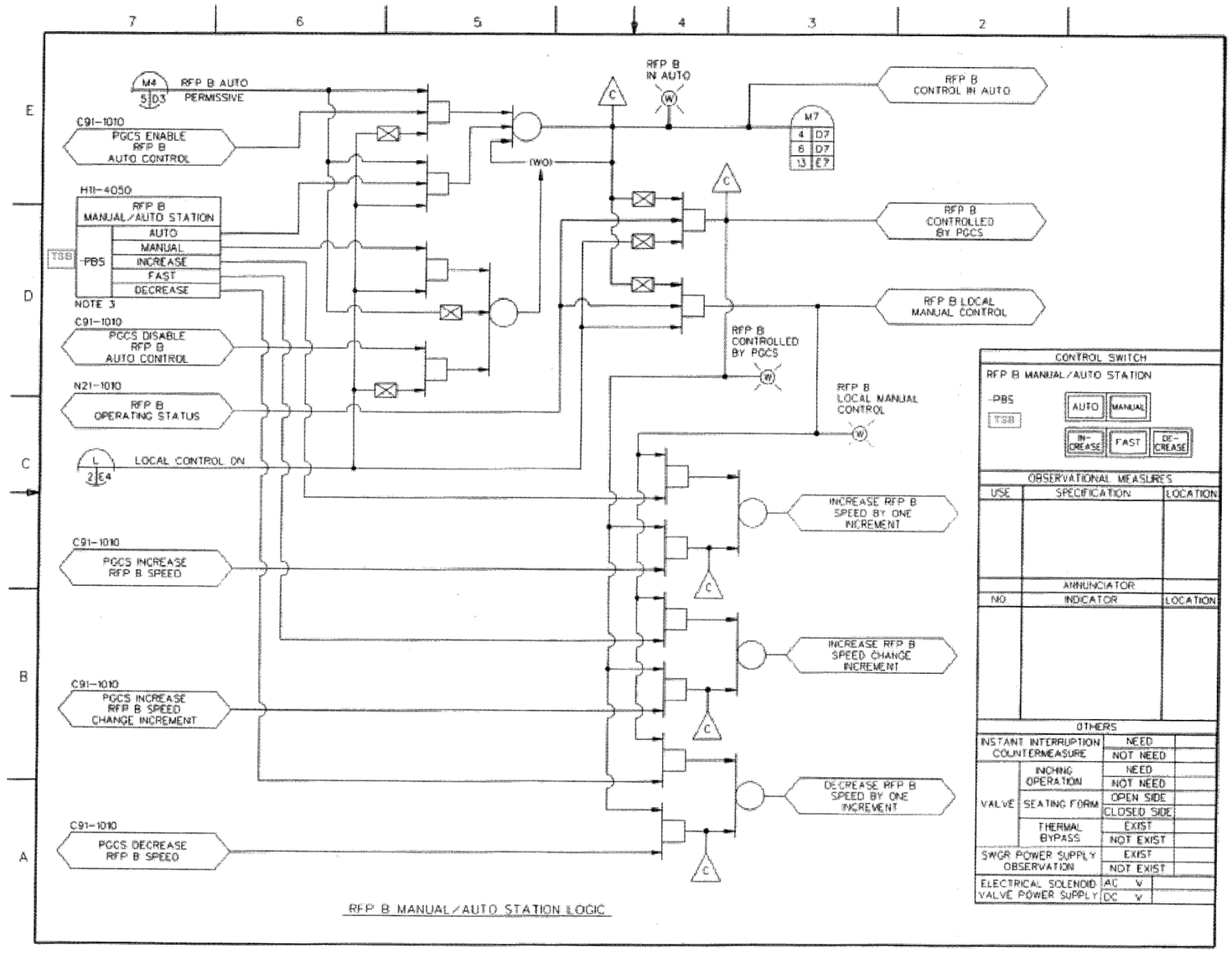

FIGURE 7.7-9 FEEDWATER CONTROL SYSTEM IBD (Sheet 8 of 14)

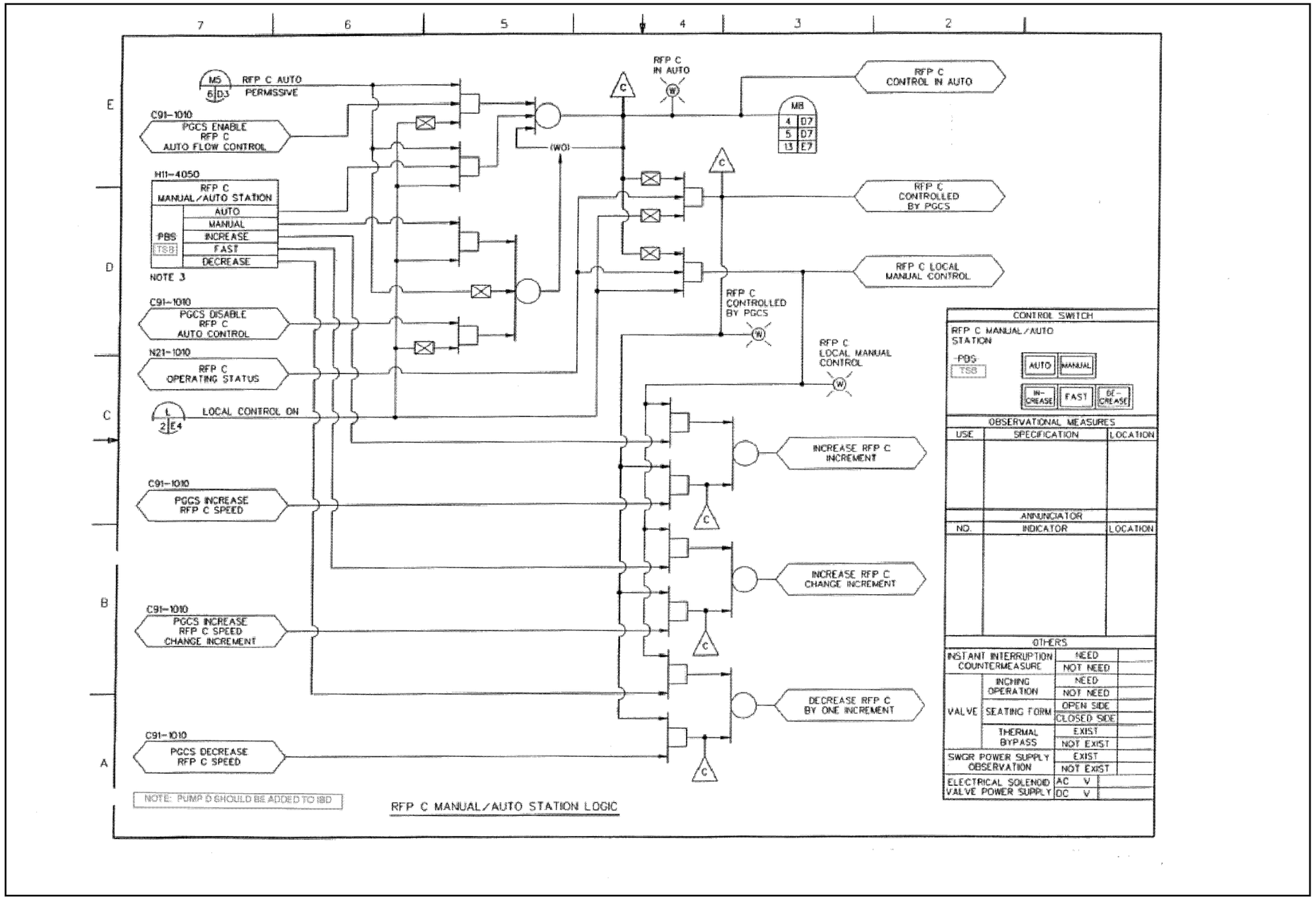

FIGURE 7.7-9 FEEDWATER CONTROL SYSTEM IBD (Sheet 9 of 14)

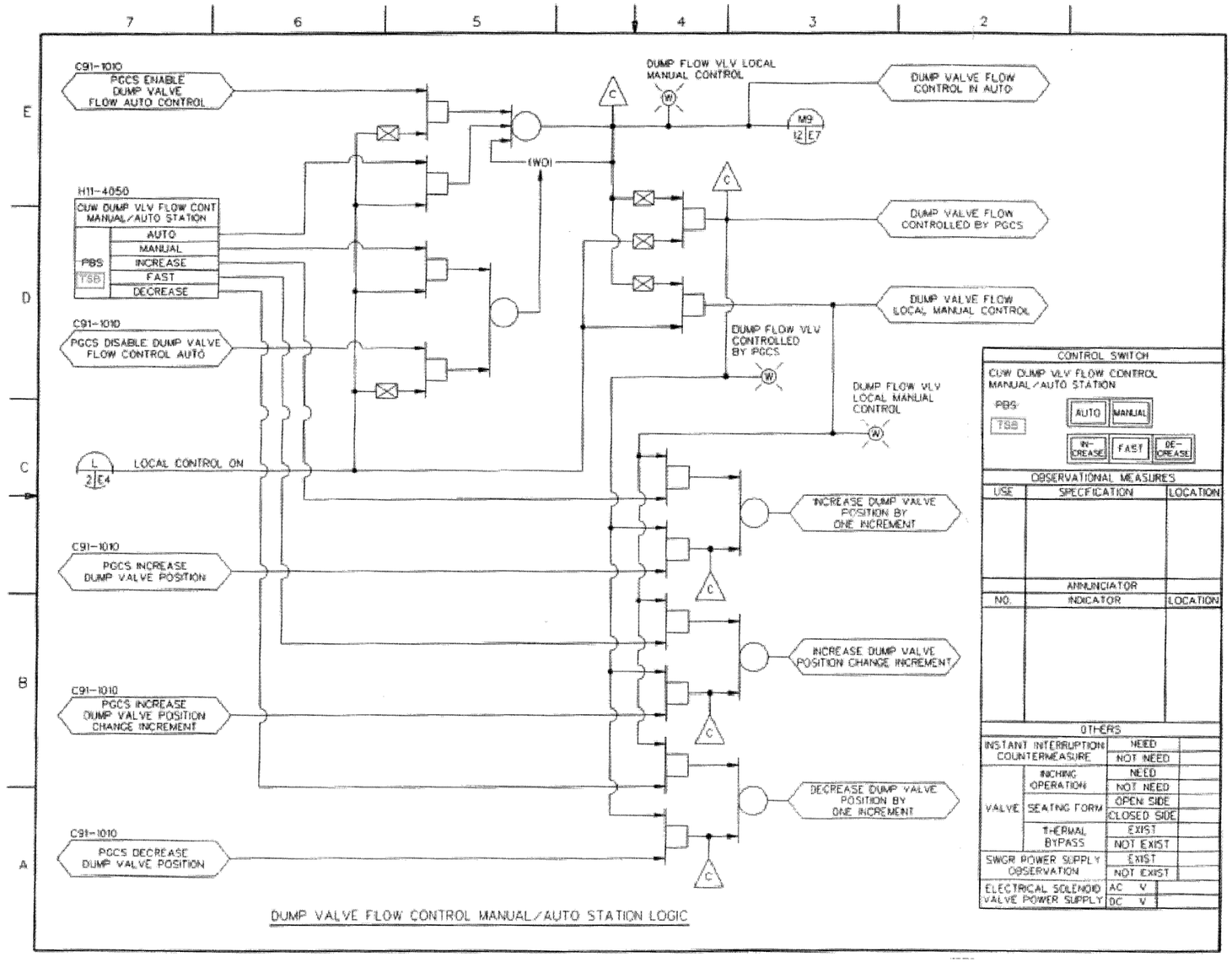

FIGURE 7.7-9 FEEDWATER CONTROL SYSTEM IBD (Sheet 11 of 14)

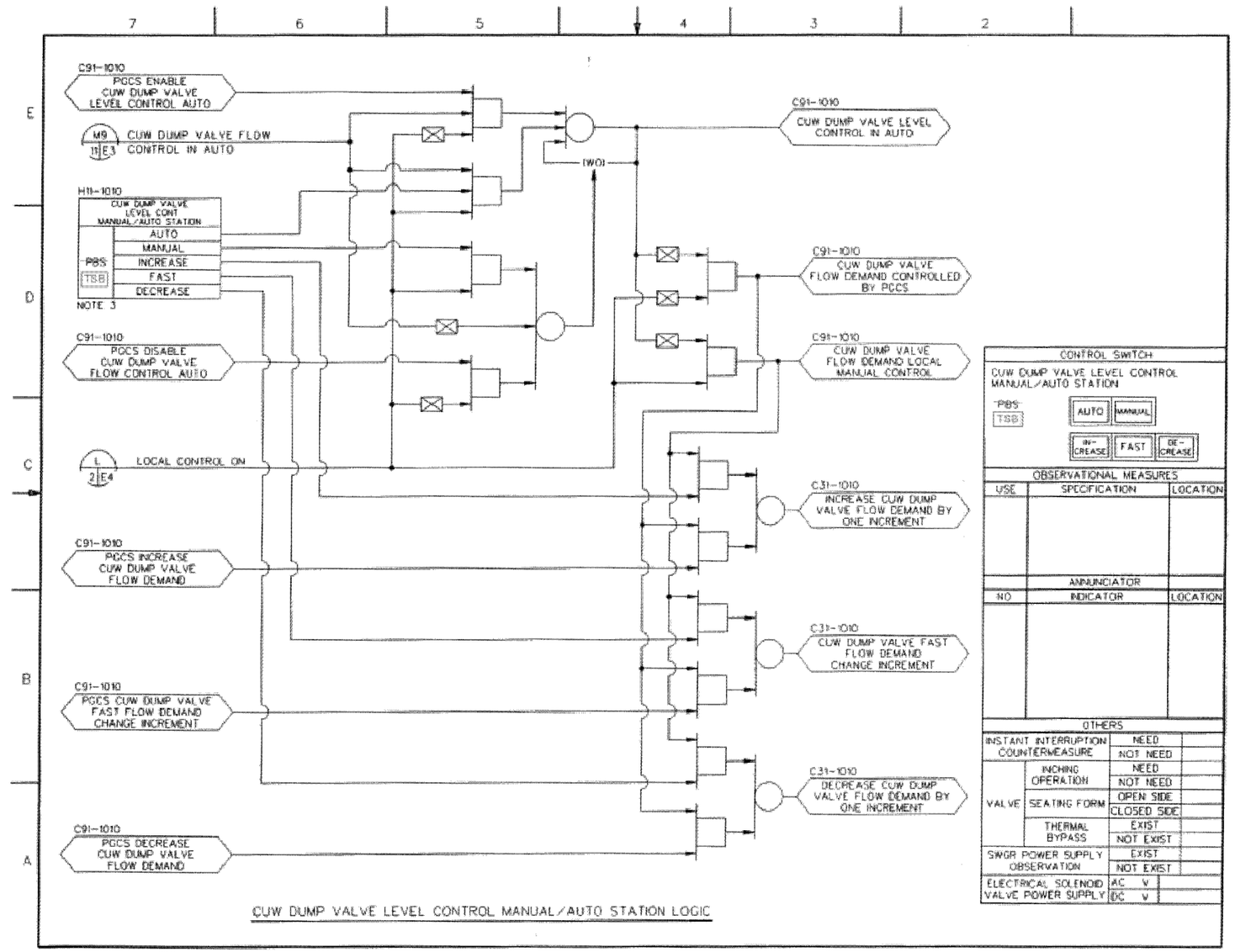

FIGURE 7.7-9 FEEDWATER CONTROL SYSTEM IBD (Sheet 12 of 14)

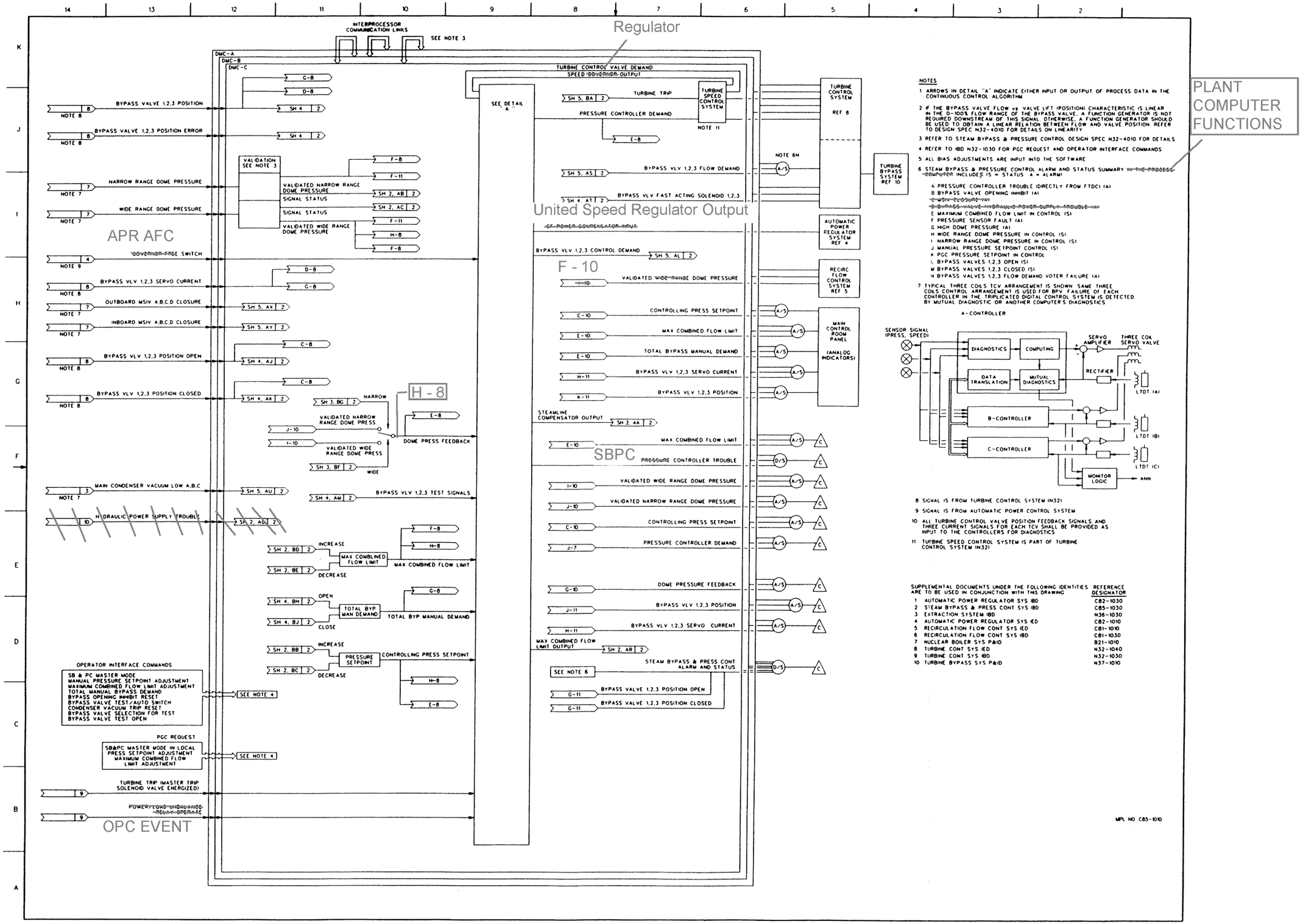

Figure 7.7-12 STEAM BYPASS AND PRESSURE CONTROL SYSTEM IED (SHEET 1 OF 2)

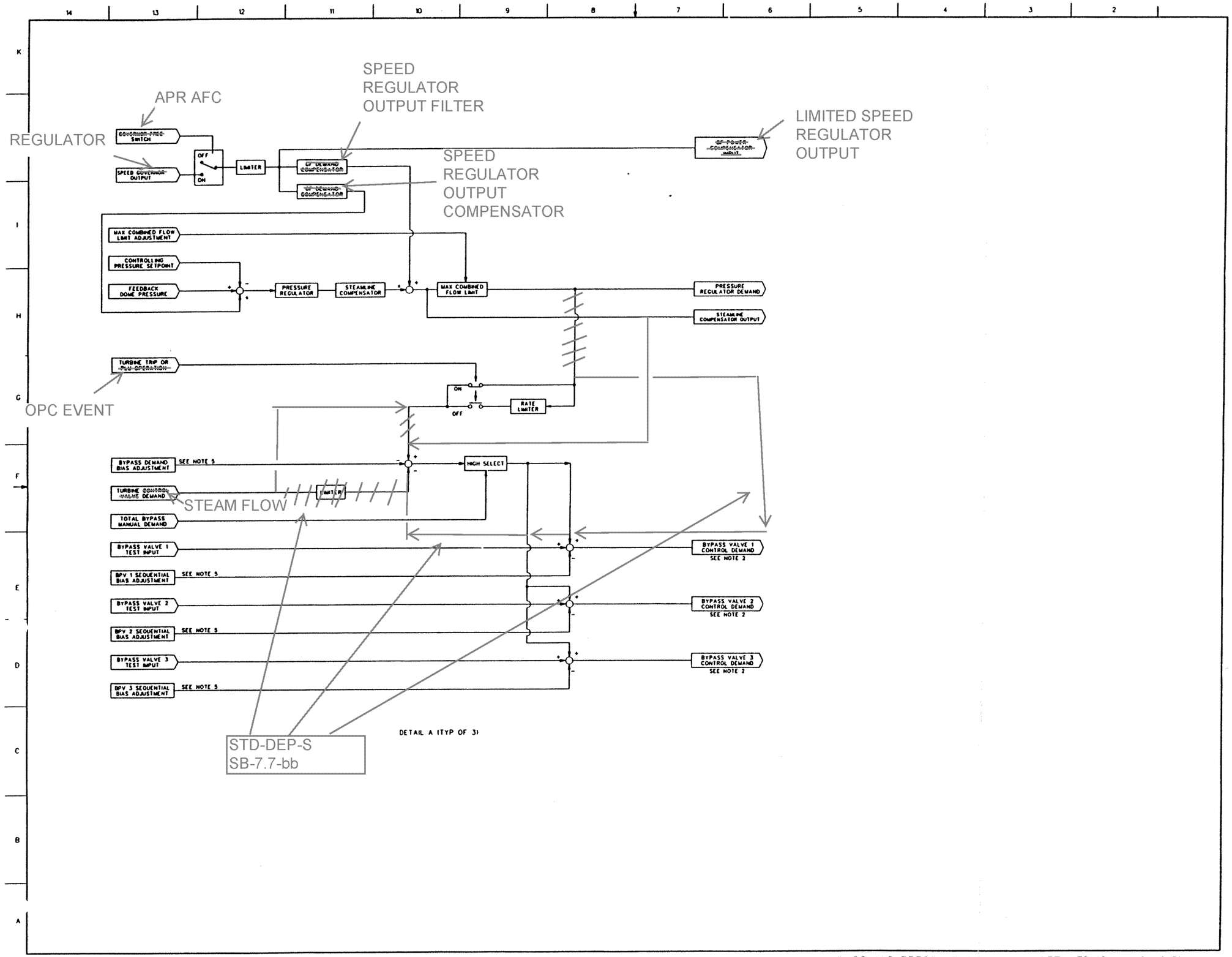

FIGURE 7.7-12 STEAM BYPASS AND PRESSURE CONTROL SYSTEM IED (Sheet 2 of 2)

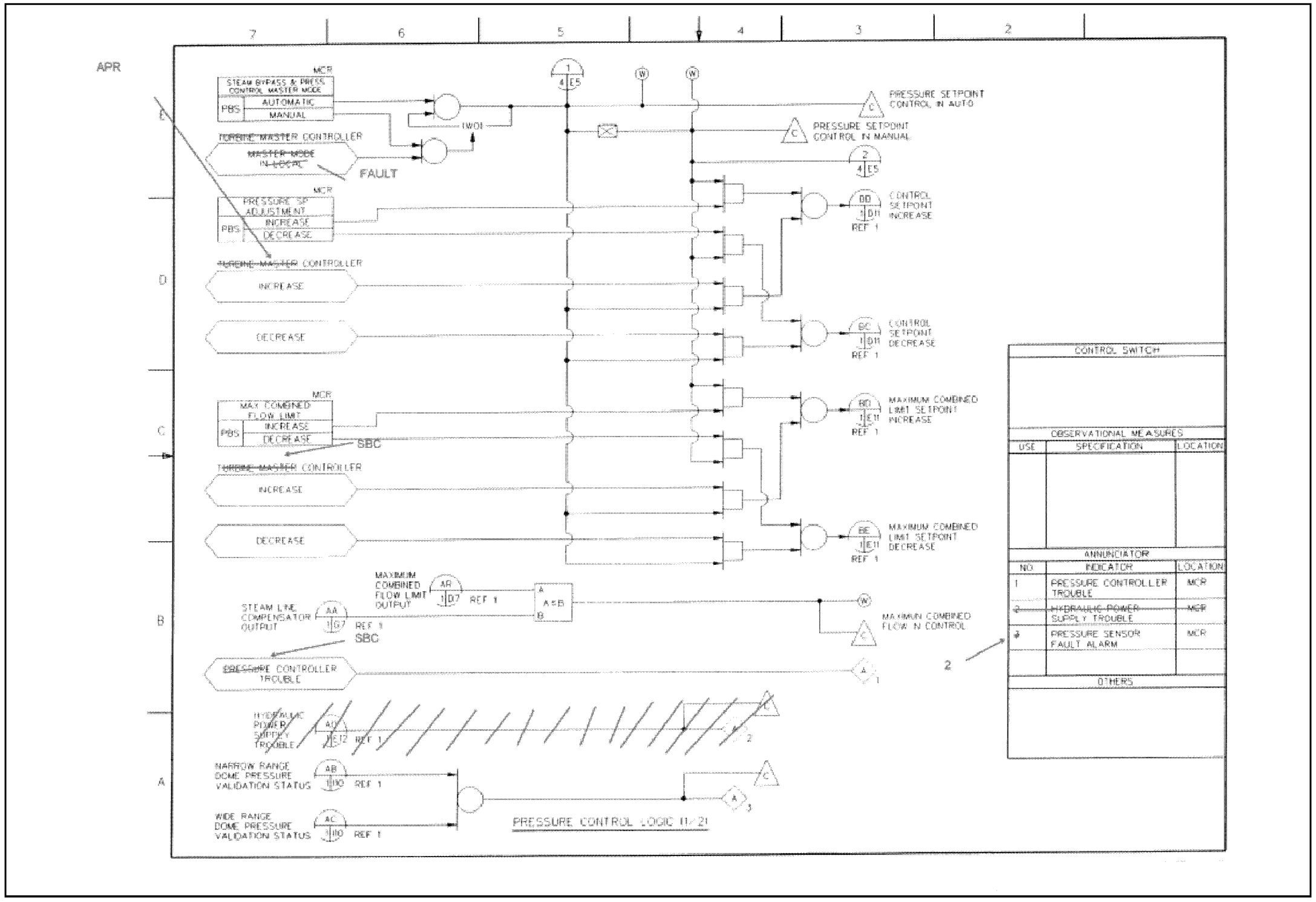

FIGURE 7.7-13 STEAM BYPASS AND PRESSURE CONTROL SYSTEM IBD (Sheet 2 of 5)

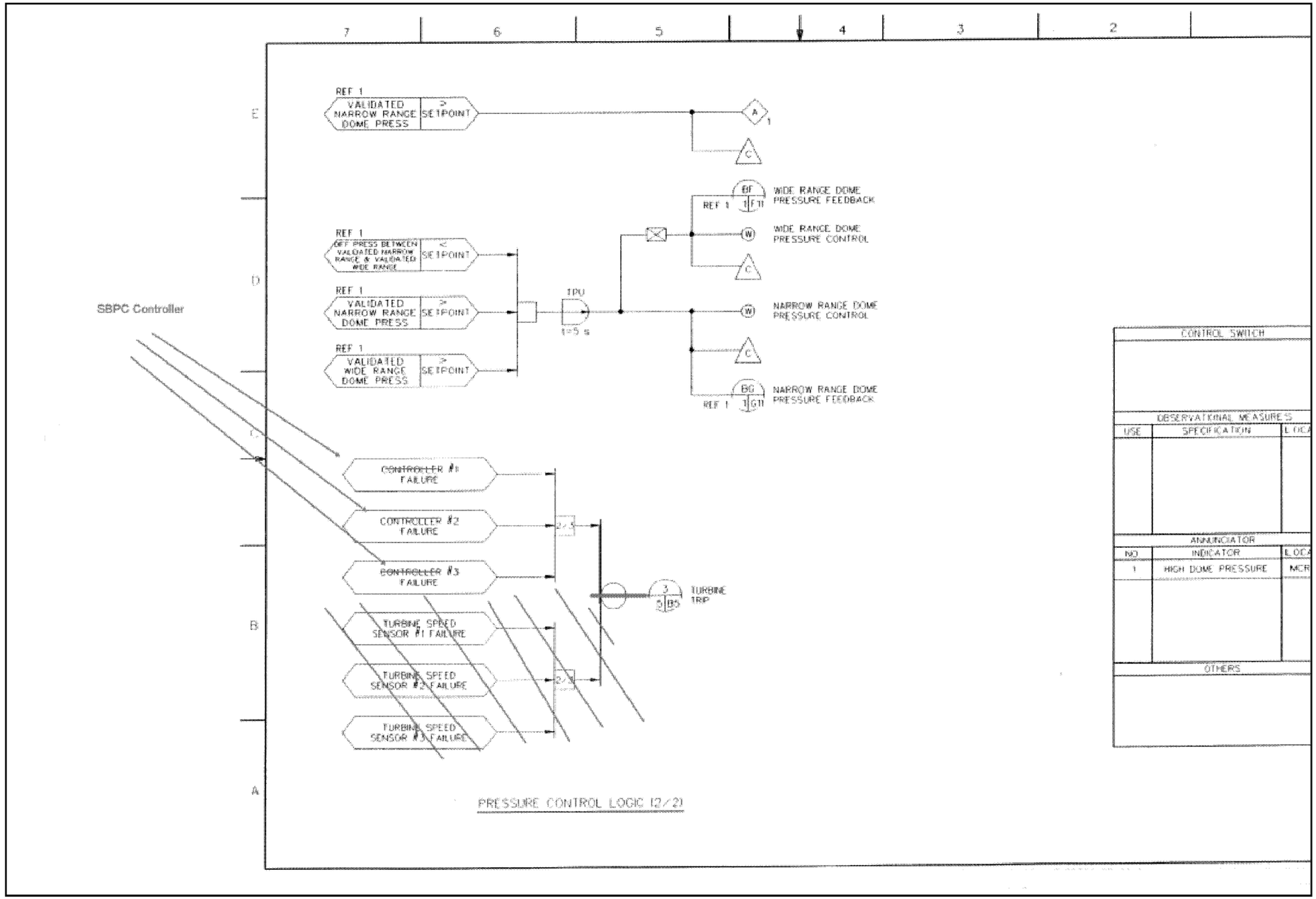

FIGURE 7.7-13 STEAM BYPASS AND PRESSURE CONTROL SYSTEM IBD (Sheet 3 of 5)

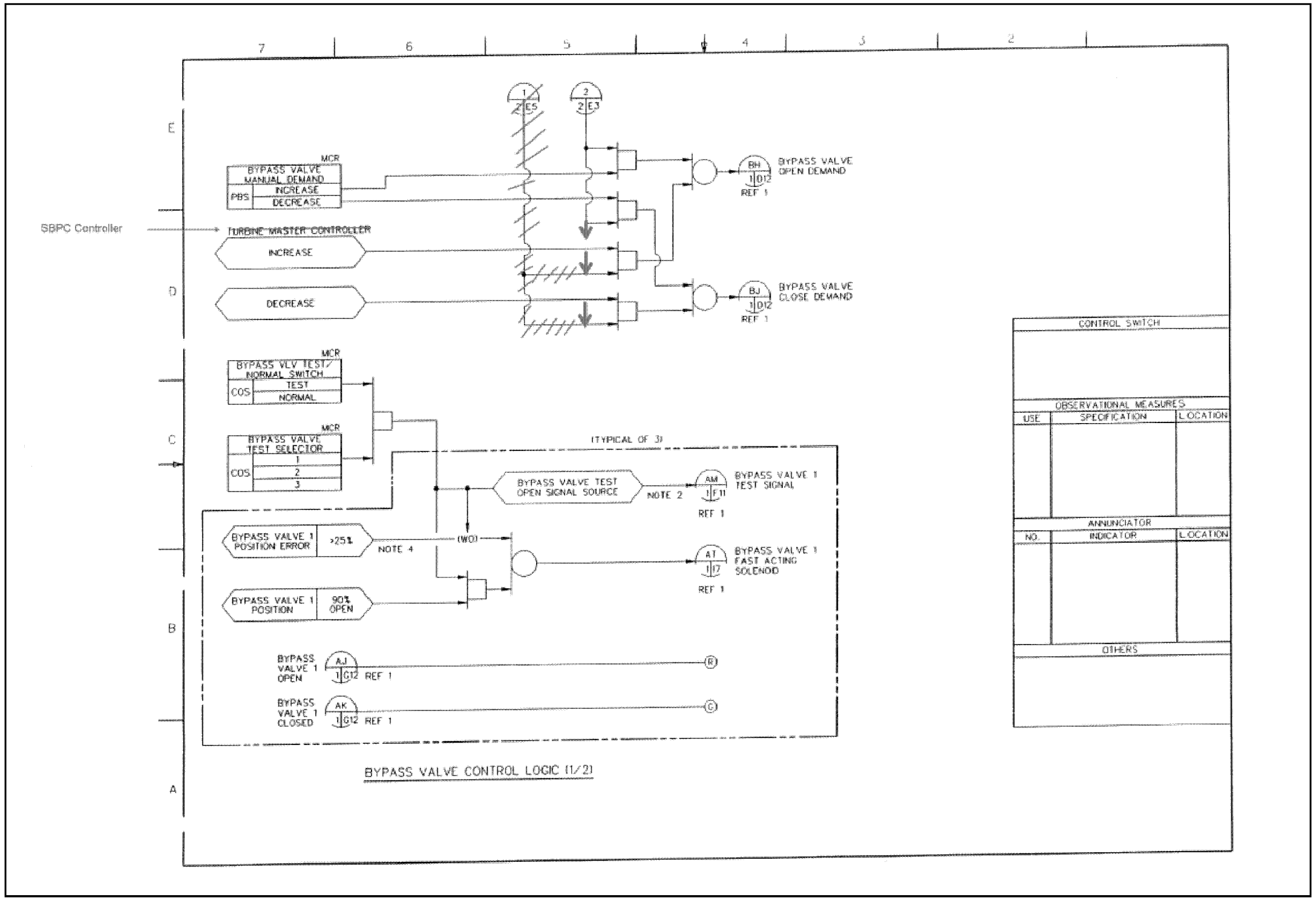

FIGURE 7.7-13 STEAM BYPASS AND PRESSURE CONTROL SYSTEM IBD (Sheet 4 of 5)

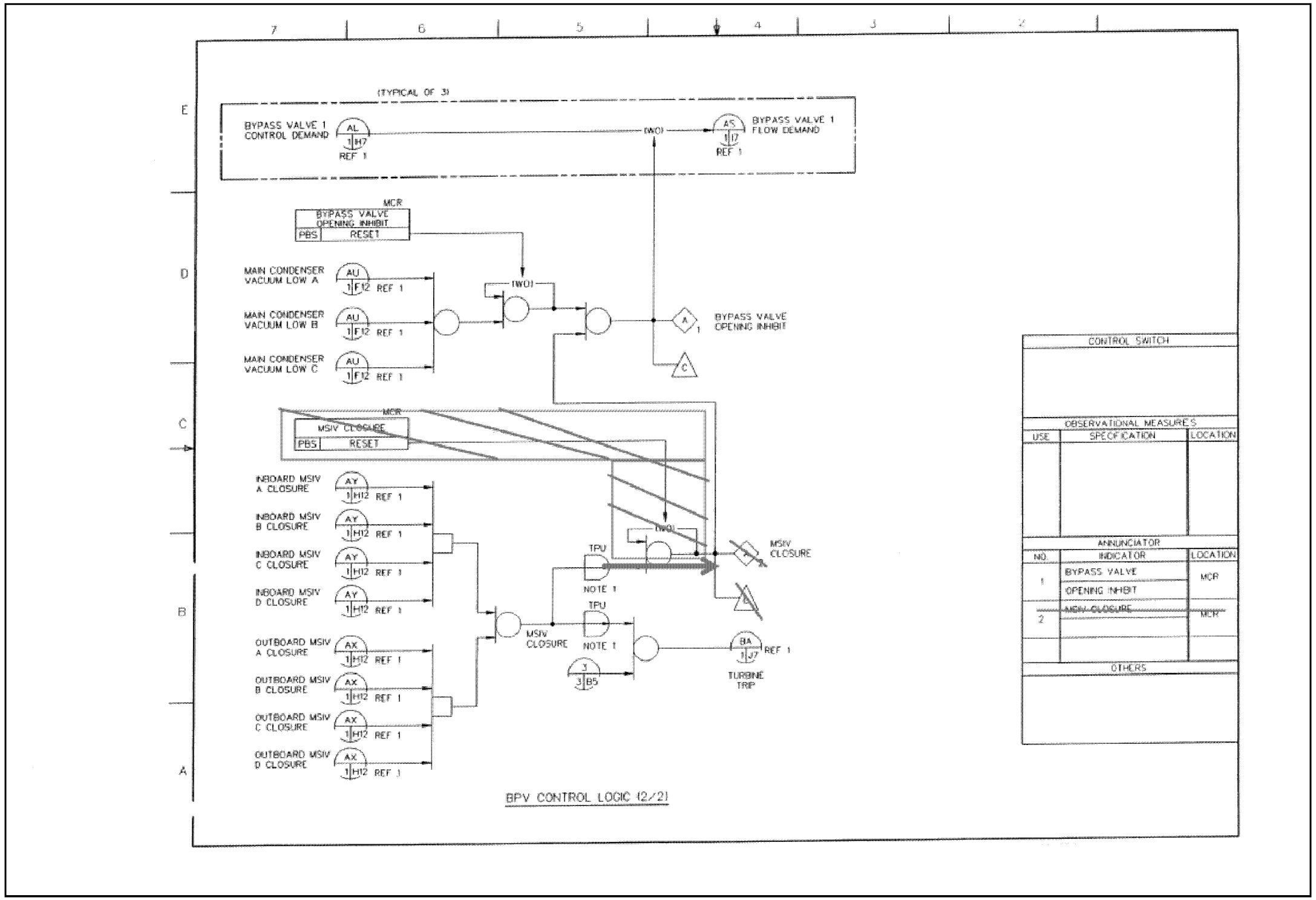

FIGURE 7.7-13 STEAM BYPASS AND PRESSURE CONTROL SYSTEM IBD (Sheet 5 of 5)

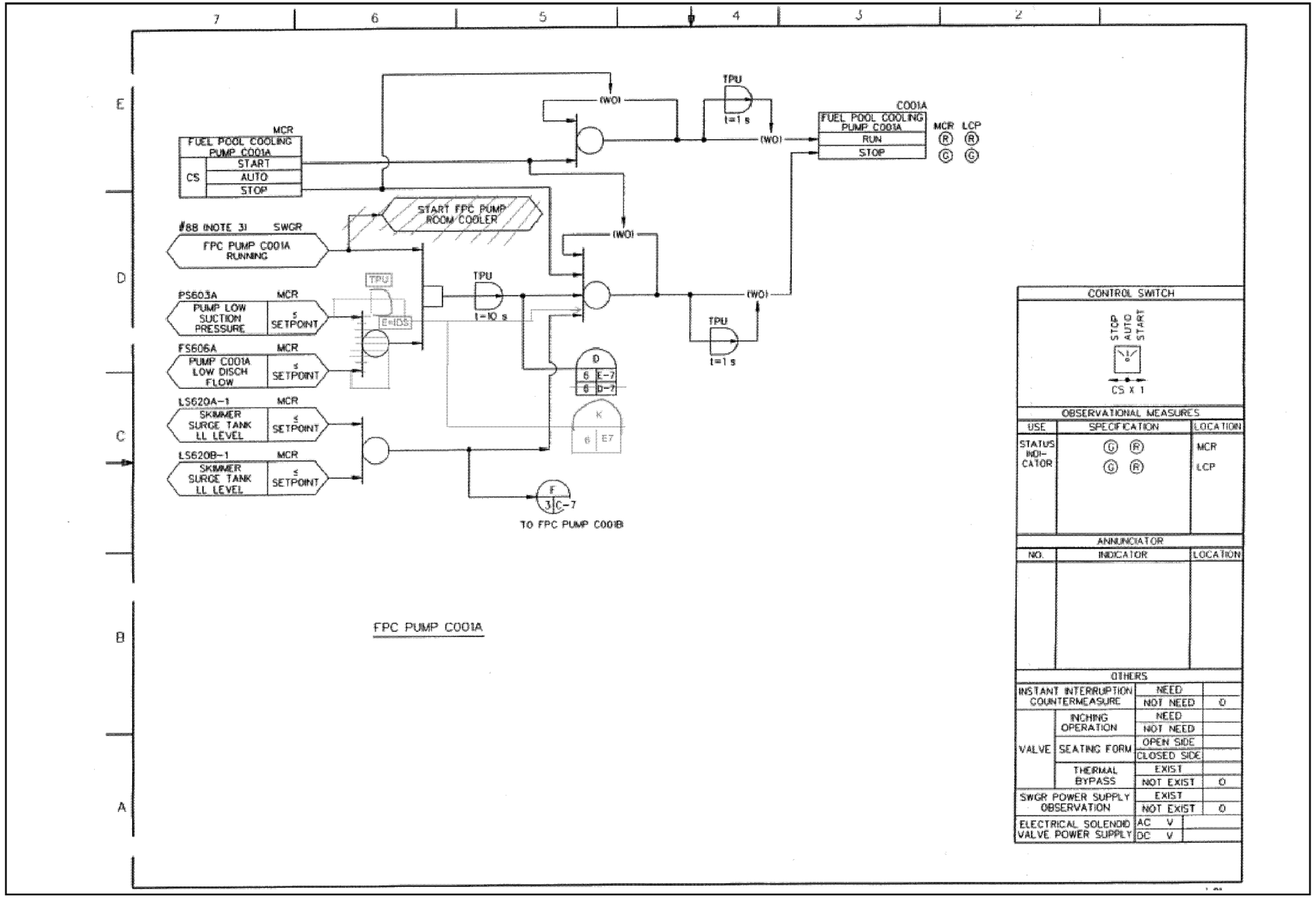

FIGURE 7.7-14 FUEL POOL COOLING AND CLEANUP SYSTEM IBD (Sheet 2 of 8)

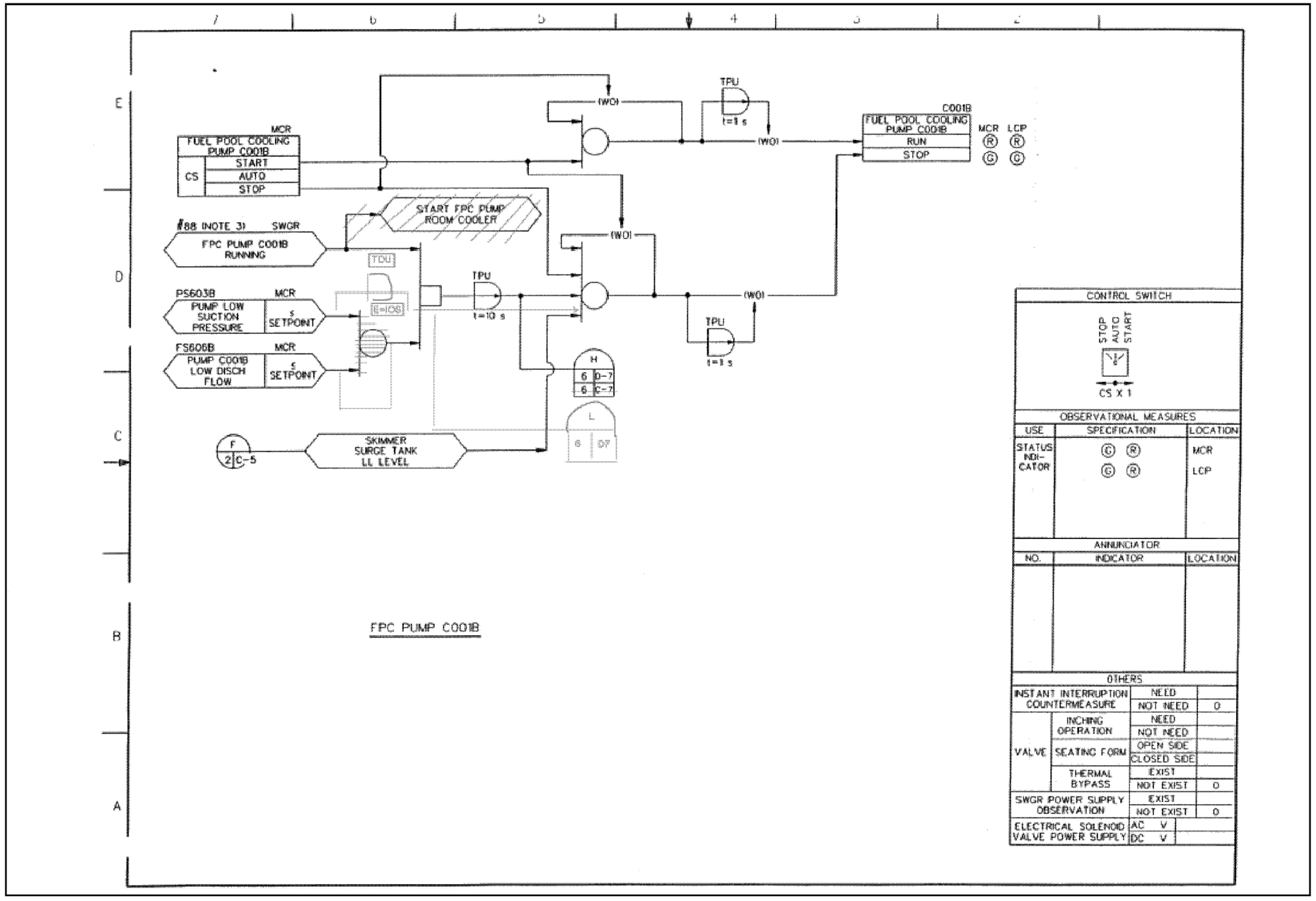

FIGURE 7.7-14 FUEL POOL COOLING AND CLEANUP SYSTEM IBD (Sheet 3 of 8)

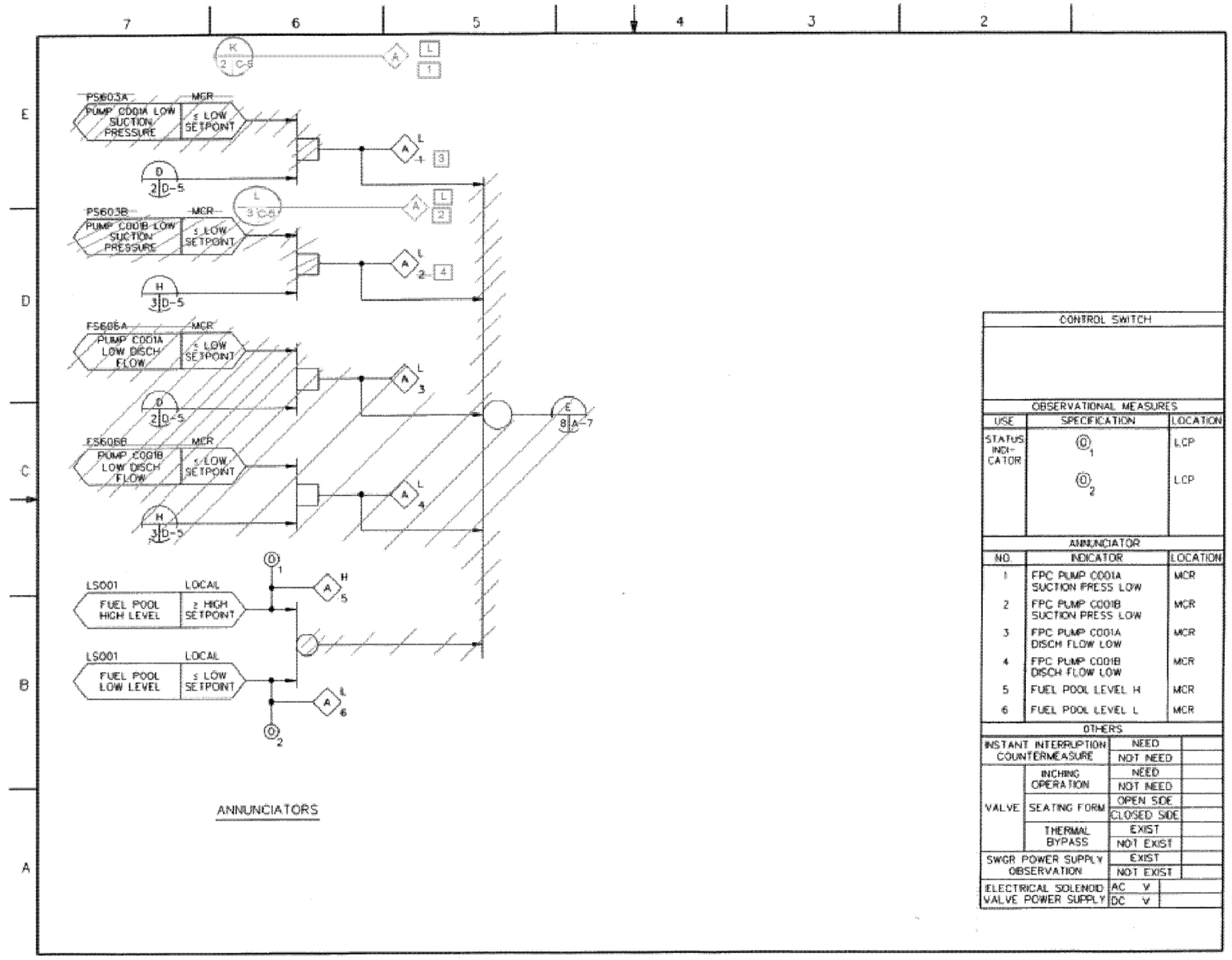

FIGURE 7.7-14 FUEL POOL COOLING AND CLEANUP SYSTEM IBD (Sheet 6 of 8)

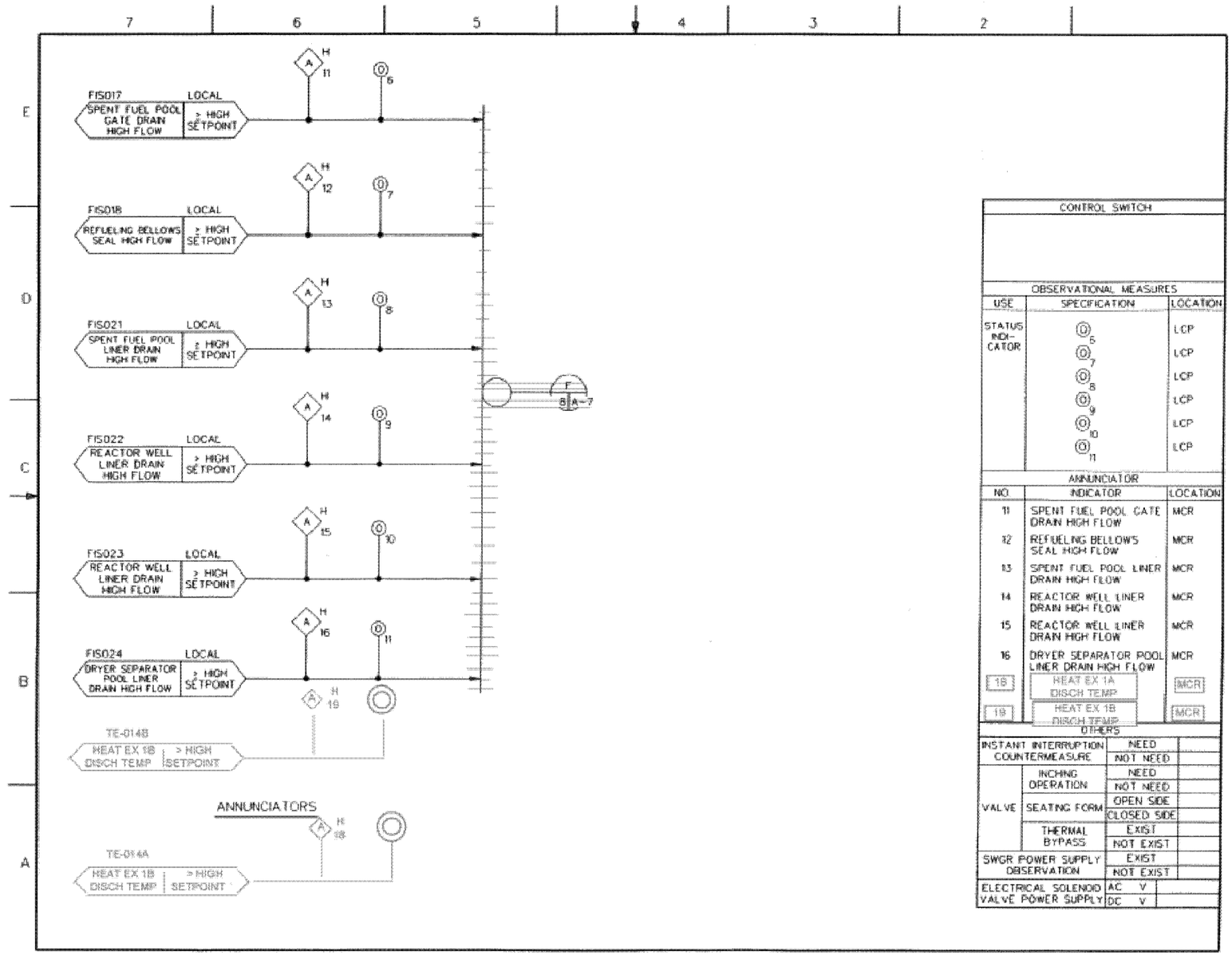

FIGURE 7.7-14 FUEL POOL COOLING AND CLEANUP SYSTEM IBD (Sheet 7 of 8)

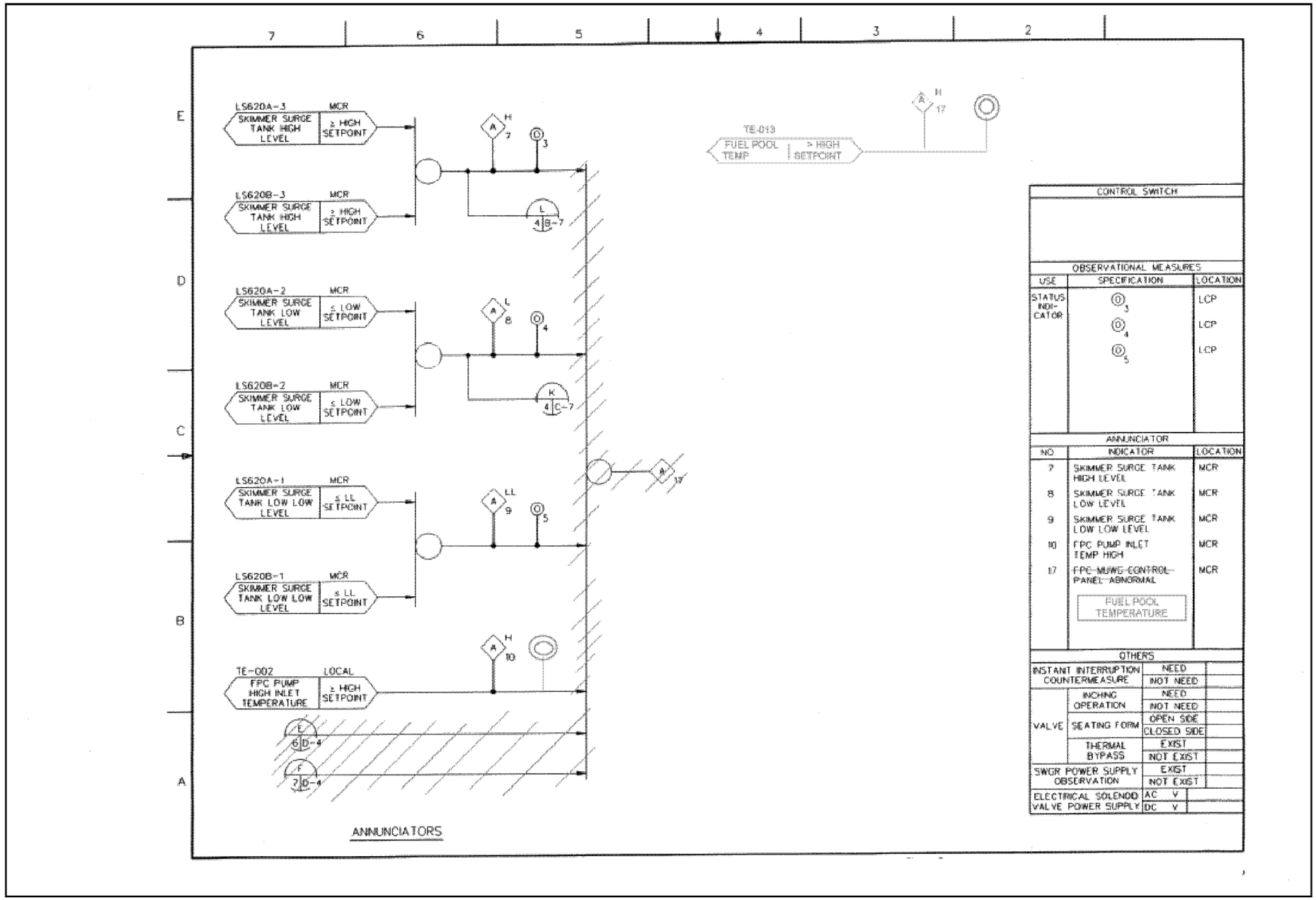

FIGURE 7.7-14 FUEL POOL COOLING AND CLEANUP SYSTEM IBD (Sheet 8 of 8)

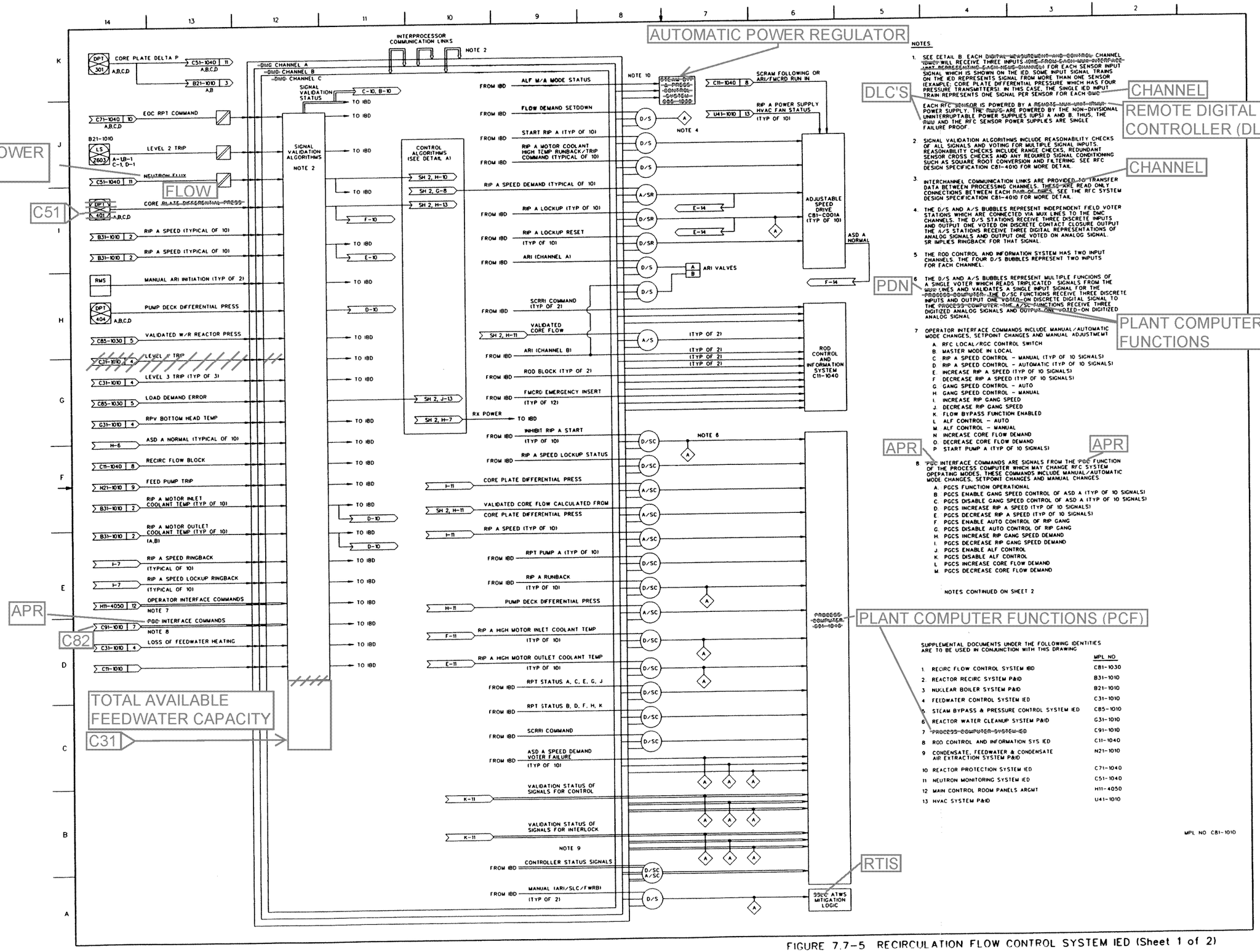

FIGURE 7.7-5 RECIRCULATION FLOW CONTROL SYSTEM IED (Sheet 1 of 2)

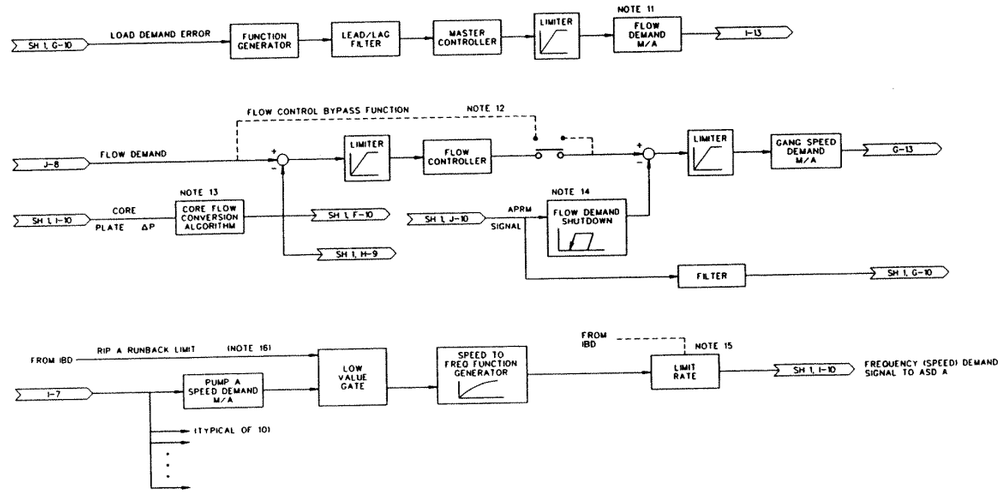

DETAIL A : RFC ALGORITHM STRUCTURE

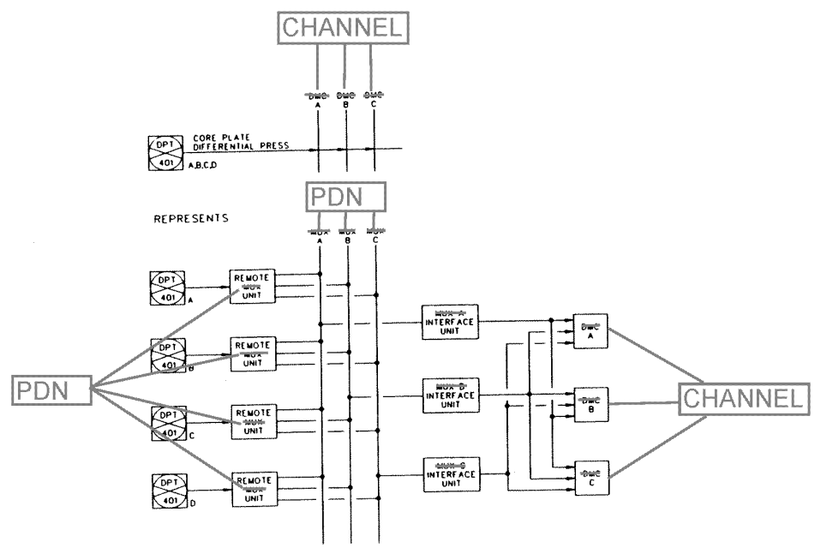

DETAIL B : INPUT SIGNAL REPRESENTATION

NOTES CONTINUED.

9 MULTIPLE CONTROLLER STATUS SIGNALS ARE REPRESENTED BY THIS SIGNAL TRAIN. THESE SIGNALS INCLUDE CONTROL MODE, M/A AND T/A STATION AND LOCAL/PGC-CONTROL STATUS.

- A RFC SYSTEM IN LOCAL CONTROL
- B RIP A RUNBACK LIMIT (TYP OF 10 SIGNALS)
- C RIP A SPEED DEMAND IN GANG CONTROL (TYP OF 10 SIGNALS)
- D RIP A SPEED DEMAND IN PGC CONTROL (TYP OF 10 SIGNALS)
- E RIP A SPEED CONTROLLED BY LOCAL MANUAL (TYP OF 10 SIGNALS)
- F GANG SPEED DEMAND IN AUTO FLOW CONTROL
- G GANG SPEED DEMAND IN PGC CONTROL
- H GANG SPEED DEMAND IN LOCAL MANUAL CONTROL
- I FLOW DEMAND IN ALF CONTROL
- J FLOW DEMAND IN PGC CONTROL
- K FLOW DEMAND IN LOCAL MANUAL CONTROL
- L GANG RIP RUNBACK LIMIT
- M GANG SPEED DECREASING RATE LIMIT
- N GANG SPEED DEMAND SETPOINT
- O FLOW DEMAND SETPOINT

10 A COMMAND IS SENT TO THE ~~STEAM BYPASS AND PRESSURE CONTROL~~ SYSTEM TO ENABLE ALF CONTROL LOGIC WHEN MASTER CONTROL IS ENABLED

11 ALL M/A STATION TRANSFERS ARE BUMPLESS. M/A STATION LOGIC IS CONTROL IN THE RFC SYSTEM IBD, CB1-1030

12 THE FLOW BYPASS FUNCTION WILL BE DELETED WHEN CORE FLOW MEASUREMENT UNCERTAINTY IS PROVEN TO BE ACCEPTABLE. SEE THE RFC SYSTEM DESIGN SPECIFICATION CB1-4010 FOR MORE DETAIL.

13 THE CORE FLOW CONVERSION ALGORITHM WILL BE CALIBRATED USING THE PUMP DECK DELTA P CORE FLOW CALCULATION.

14 THE FLOW DEMAND SETDOWN MODIFIER HAS ADJUSTABLE SLOPES AND BREAKPOINTS FOR HIGH FLUX SCRAM AVOIDANCE. REFER TO RFC SYSTEM DESIGN SPECIFICATION, CB1-4010 FOR SPECIFIC FUNCTION CHARACTERISTICS AND PARAMETERS

15 THE RATE LIMIT FOR DECREASING RECIRCULATION FLOW WILL DEPEND ON LOGIC IN THE RFC SYSTEM IBD, CB1-1030. THE RATE LIMIT FOR INCREASING FLOW IS ALWAYS ≤5.0 PERCENT PER SECOND.

16 RIP SPEED RUNBACK LIMIT COMES FROM EITHER THE OUTPUT OF LOW VALUE GATE OF IBD (WHEN RIP RUNBACK IS ENABLED) OR THE 100 PERCENT SPEED DEMAND (WHEN RIP RUNBACK IS NOT ENABLED)

APR

AUTOMATIC POWER REGULATOR

MIN SPEED

FIGURE 7.7-5 RECIRCULATION FLOW CONTROL SYSTEM IED (Sheet 2 of 2)

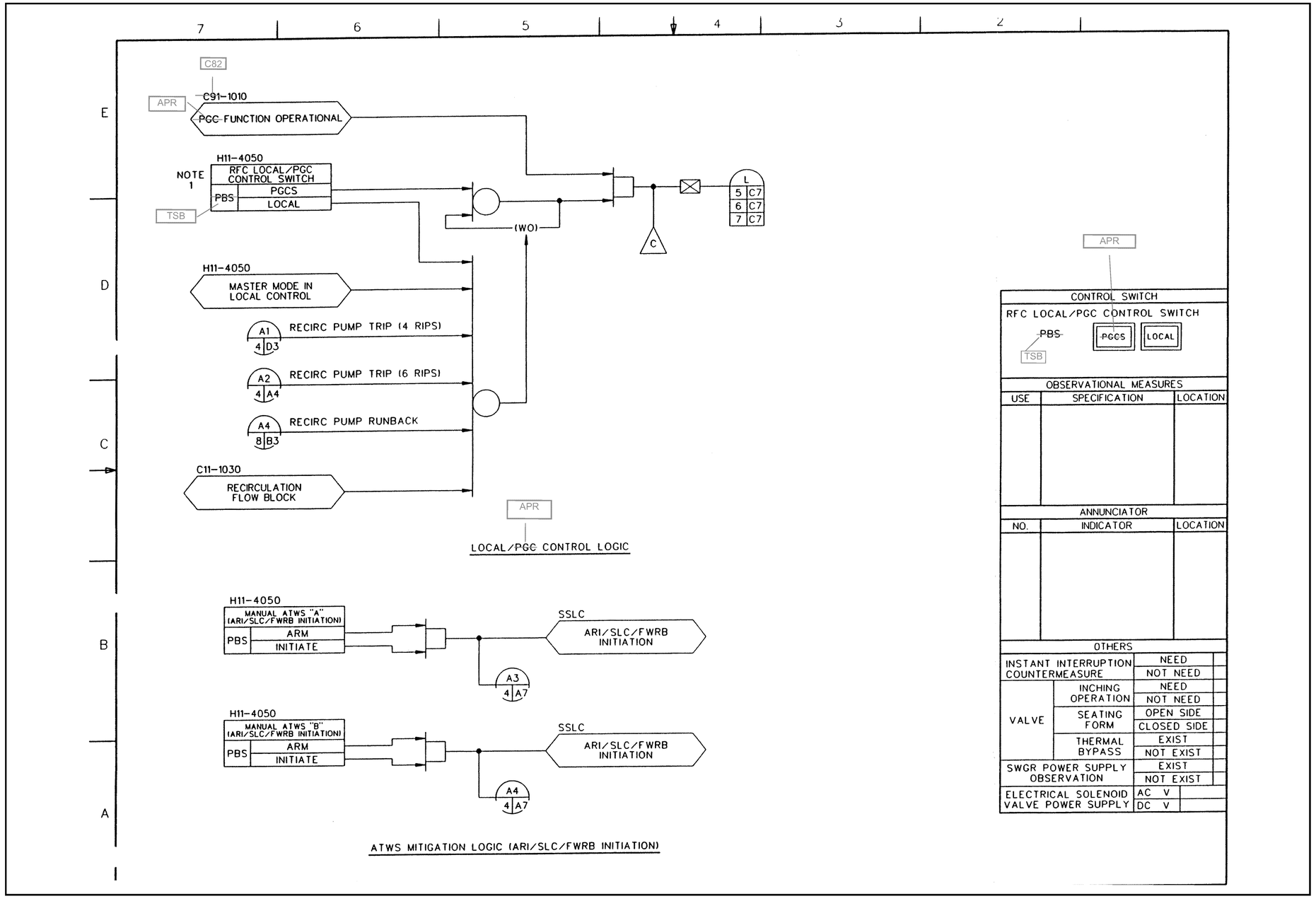

FIGURE 7.7-7 RECIRCULATION FLOW CONTROL SYSTEM IBD (Sheet 2 of 9)

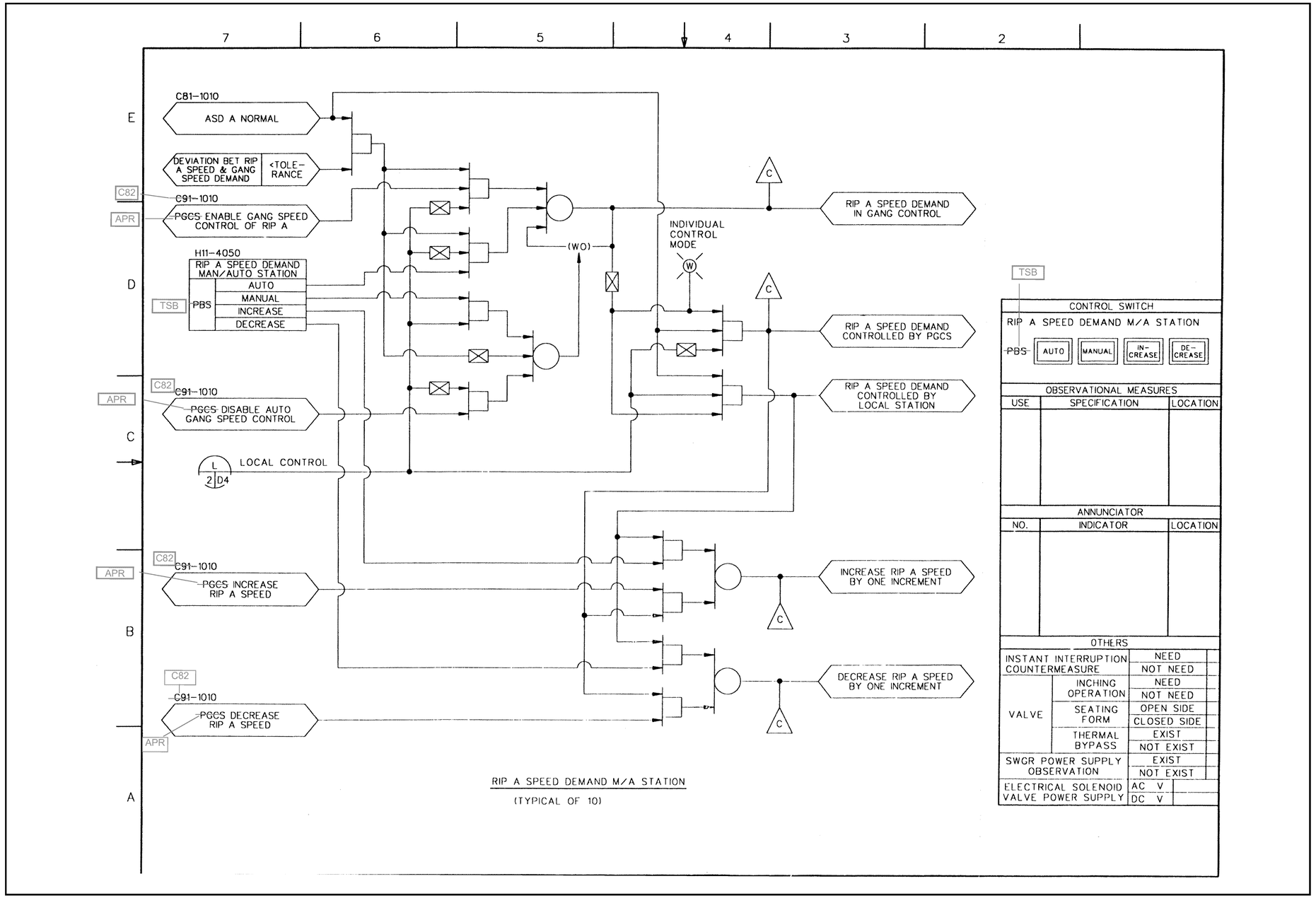

FIGURE 7.7-7 RECIRCULATION FLOW CONTROL SYSTEM IBD (Sheet 5 of 9)

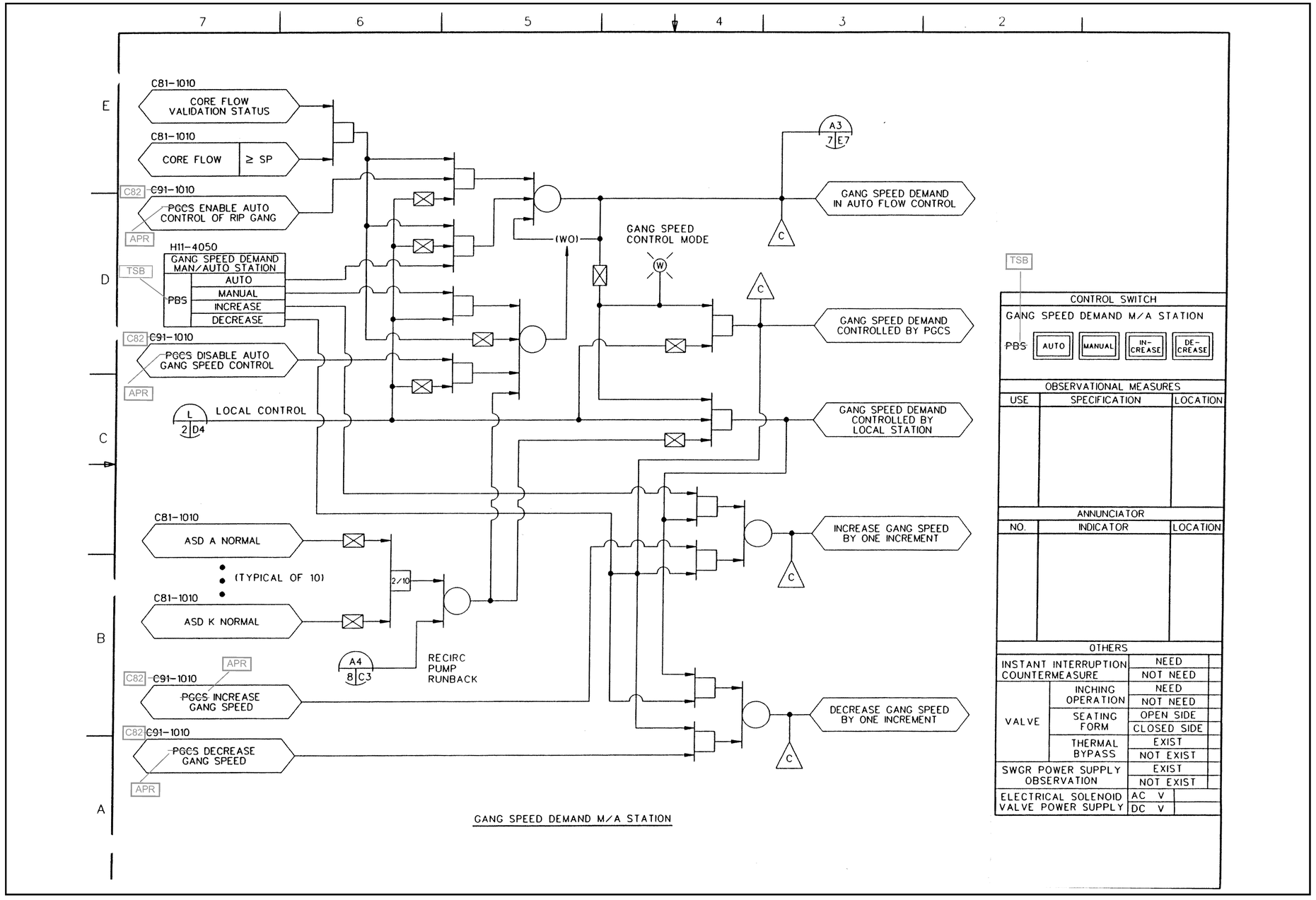

FIGURE 7.7-7 RECIRCULATION FLOW CONTROL SYSTEM IBD (Sheet 6 of 9)

NOTES:

1. LOCAL CONTROL ALLOWS THE OPERATOR TO EITHER MANUALLY MANIPULATE DEMAND SIGNALS OR PLACE THEM IN AUTOMATIC CONTROL AT MANUAL/AUTO STATIONS. POWER GENERATION CONTROL SYSTEM (PGC) CONTROL ALLOWS THE COMPUTER TO DIRECTLY MANIPULATE DEMAND SIGNALS AT THE M/A STATION OR PLACE THEM IN AUTOMATIC CONTROL.

2. MULTIPLE TRANSMITTER SIGNAL INPUTS FOR SIMILAR PROCESS SIGNALS ARE, IN GENERAL, COMBINED INTO SINGLE SIGNALS WITHIN EACH ~~DMC~~ CHANNEL BY THE SIGNAL VALIDATION ALGORITHMS. IN THE CASE OF FLOW RATES IN PARALLEL FLOW PATHS (SUCH AS INDIVIDUAL STEAM LINE FLOWS), THIS INVOLVES SUMMING THE FLOWS TO OBTAIN TOTAL FLOW. IN THE CASE OF REDUNDANT TRANSMITTER SIGNALS (SUCH AS REACTOR WATER LEVEL), THIS INVOLVES DETERMINATION OF A SINGLE VALID VALUE FOR THE PARAMETER. IN THIS DOCUMENT, THE COMBINED SINGLE VALIDATED SIGNAL IS SHOWN IN GENERAL. ONE EXCEPTION IS THE REACTOR WATER LEVEL SIGNALS USED FOR ATWS MITIGATION LEVEL 3 SIGNAL ISSUED TO THE RFCS SYSTEM (RPT). IN THIS CASE, ALL THREE LEVEL TRIP SIGNALS MUST BE SENT TO RFCS, AND RFCS COMBINES THE TRIP SIGNALS FOR THE ATWS RPT LOGIC. THEREFORE, ALL THREE LEVEL TRANSMITTER SIGNALS ARE SHOWN IN THE LOGIC DEPICTION.

3. THE ~~PUSH BUTTON SWITCH (PBS)~~ TOUCH SCREEN BUTON (TSB) SENDS A HIGH SIGNAL FOR AT LEAST ONE COMPLETE SAMPLING PERIOD.

4. THE STATUS INDICATOR (W) IS DISPLAYED ON FDWC DEDICATED SOFTWARE FACED DISPLAY.

5. LOGIC FOR ONE ~~DMC,~~ CHANNEL TYPICAL OF ALL THREE ~~DMCs,~~ CHANNELS, IS SHOWN. FOR REFERENCE PURPOSES ONLY, ANNUNCIATORS AND COMPUTER POINT SYMBOLS ARE SHOWN HERE. THESE OUTPUTS ARE ACTUALLY IMPLEMENTED BY VOTERS AS SHOWN IN REFERENCE C31-1010.

6. DELETED

7. TRIP FUNCTION SHOWN WITHIN DASH LINES ARE PERFORMED BY INDEPENDENT MICROPROCESSOR NUMBER 2. ALL OTHER FUNCTIONS ARE PERFORMED BY MICROPROCESSOR NUMBER 1.

8. ~~LOGIC FOR ATWS FEEDWATER RUNBACK SHOWN WITHIN DASHED LINES IS PERFORMED BY SAFETY SYSTEM LOGIC AND CONTROL (SSLC). LOGIC IS FOR SSLC DIV I AND TYPICAL FOR DIVISIONS II, III AND IV.~~

TABLE OF CONTENTS

SH	TITLE
1	NOTES, REFERENCE DOCUMENTS
2	FEEDWATER CONTROL SYSTEM INTERLOCKS
3	FEEDWATER CONTROL SYSTEM INTERLOCKS, MODE SELECTION LOGIC
4	RFP A INTERLOCKS AND CONTROLLER INITIALIZATION
5	RFP B INTERLOCKS AND CONTROLLER INITIALIZATION
6	RFP C INTERLOCKS AND CONTROLLER INITIALIZATION
7	RFP A MANUAL/AUTO STATION LOGIC
8	RFP B MANUAL/AUTO STATION LOGIC
9	RFP C MANUAL/AUTO STATION LOGIC
10	LFCV MANUAL/AUTO STATION LOGIC
11	DUMP VALVE FLOW CONTROL MANUAL/AUTO STATION LOGIC
12	CUW DUMP VALVE LEVEL CONTROL MANUAL/AUTO STATION SETPOINT CHANGE LOGIC
13	GAIN CHANGE LOGIC
14	ACTUATOR LOCKUP LOGIC, LOCKUP RINGBACK LOGIC, DMC CONTROLLER FAILURE
14	LOSS OF FEEDWATER HEATING LOGIC

SUPPLEMENTAL DOCUMENTS UNDER THE FOLLOWING IDENTITIES ARE TO BE USED IN CONJUNCTION WITH THIS DRAWING.

	REFERENCE DESIGNATOR
1. FEEDWATER CONTROL SYSTEM, IED	C31-1010
2. RECIRCULATION FLOW CONTROL SYSTEM, IED	C81-1010
3. CONDENSATE, FEEDWATER & CONDENSATE AIR EXTRACTION SYSTEM, P&ID	N21-1010
4. CONDENSATE, FEEDWATER & CONDENSATE AIR EXTRACTION SYSTEM, IBD	N21-1030
5. REACTOR WATER CLEANUP SYSTEM, P&ID	G31-1010
6. REACTOR WATER CLEANUP SYSTEM, IBD	G31-1030
7. NUCLEAR BOILER SYSTEM, P&ID	B21-1010
8. NUCLEAR BOILER SYSTEM, IBD	B21-1030
9. ~~PROCESS COMPUTER,~~ PLANT COMPUTER FUNCTIONS (PCF), IED	C91-1010
10. RECIRCULATION FLOW CONTROL SYSTEM, IBD	C81-1030
11. MAIN CONTROL ROOM PANEL, ARGMT	H11-4050
12. TURBINE CONTROL SYSTEM, IED	N32-1010
13. TURBINE CONTROL SYSTEM, IBD	N32-1030
14. NEUTRON MONITORING SYSTEM, IED	C51-1010

MPL NO. C31-1030

FIGURE 7.7-9 FEEDWATER CONTROL SYSTEM IBD (Sheet 1 of 14)

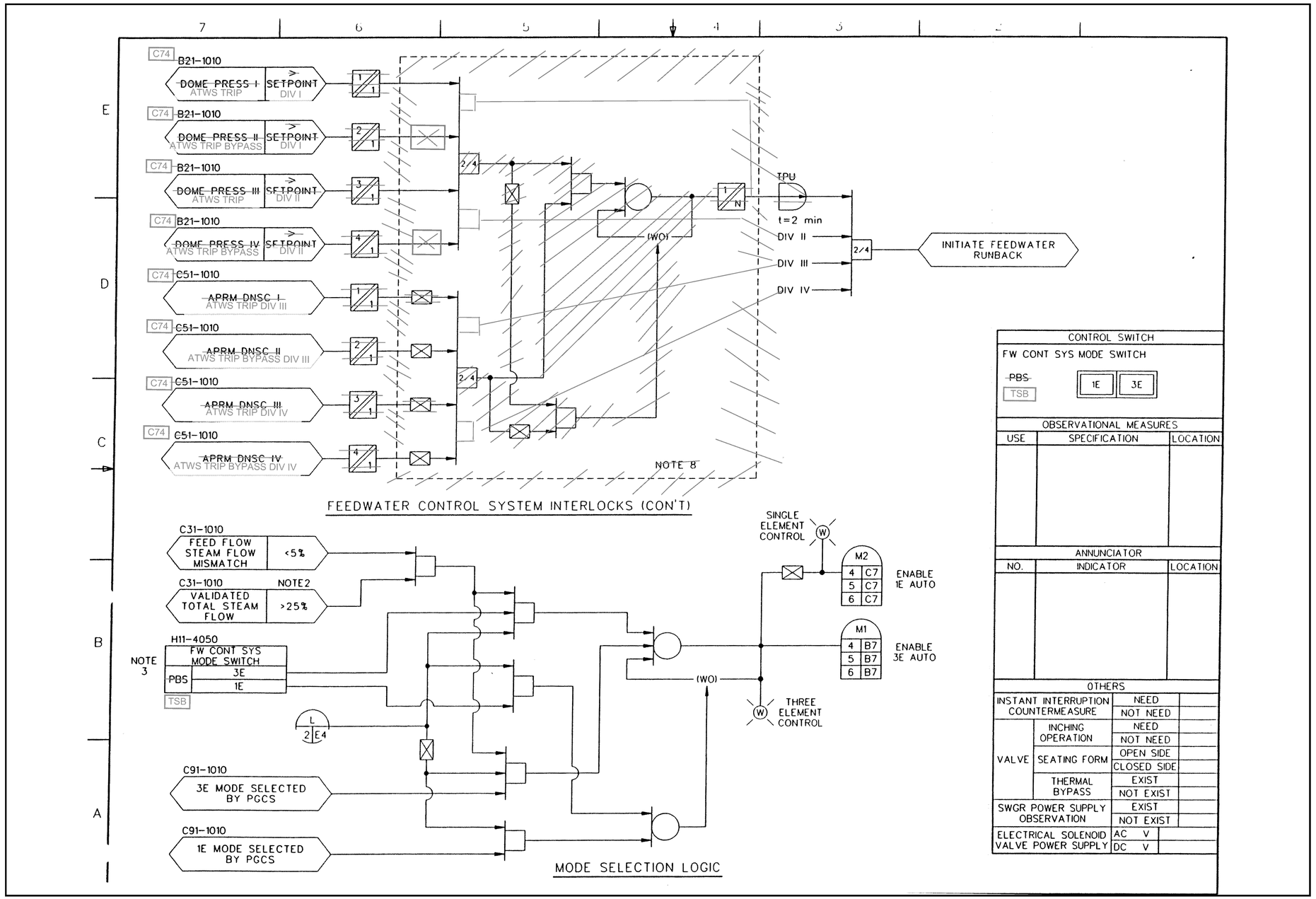

FIGURE 7.7-9 FEEDWATER CONTROL SYSTEM IBD (Sheet 3 of 14)

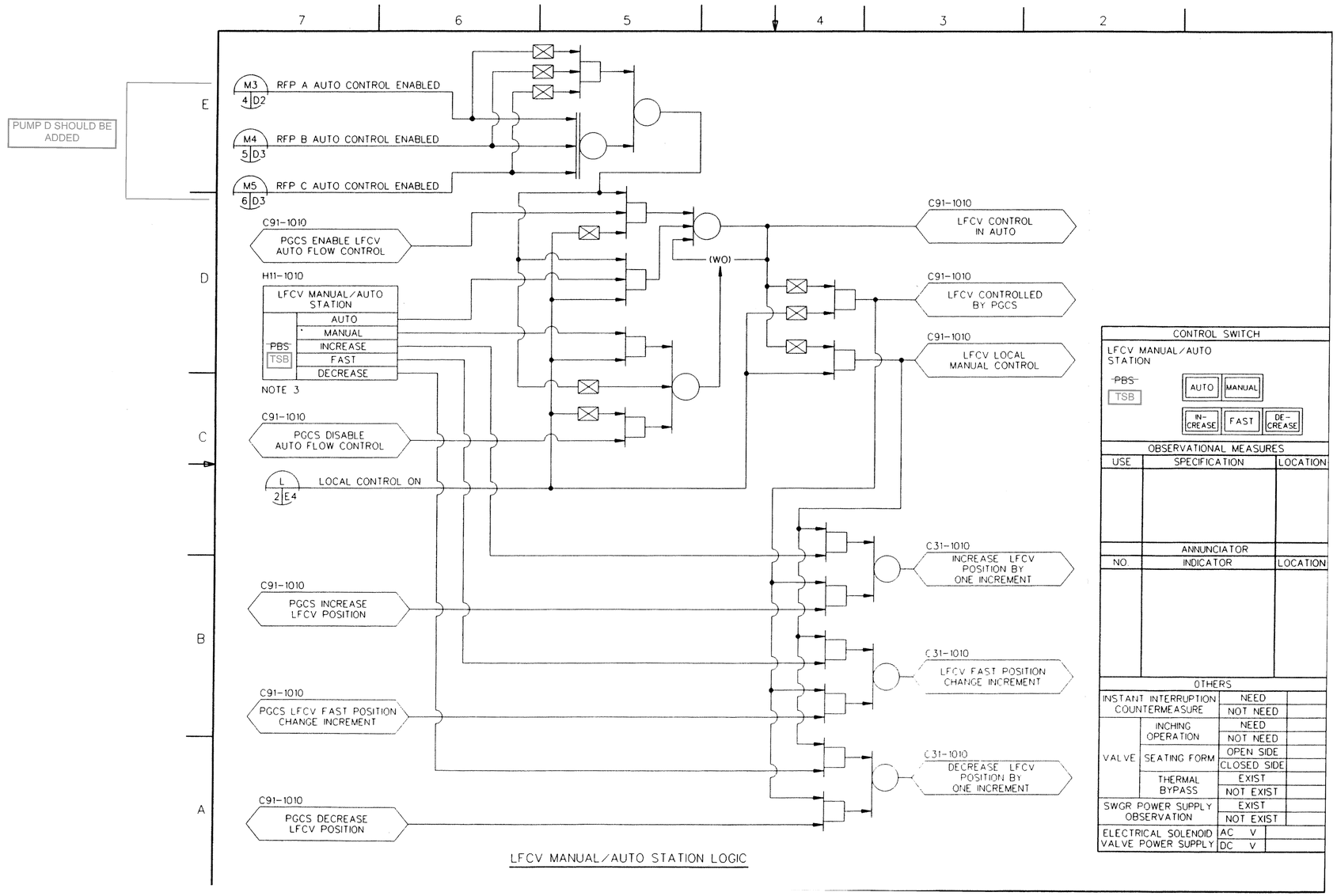

FIGURE 7.7-9 FEEDWATER CONTROL SYSTEM IBD (Sheet 10 of 14)

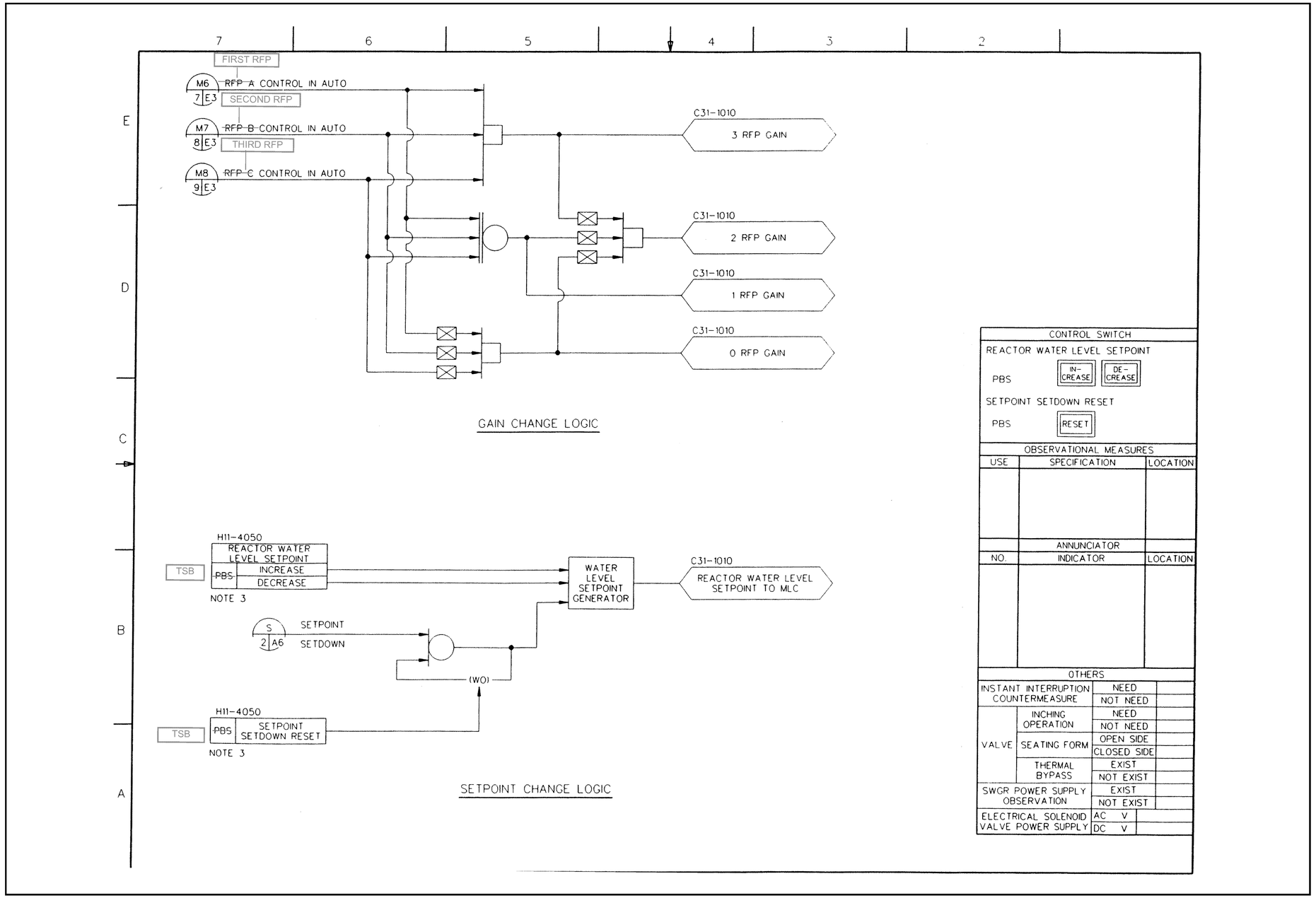

FIGURE 7.7-9 FEEDWATER CONTROL SYSTEM IBD (Sheet 13 of 14)

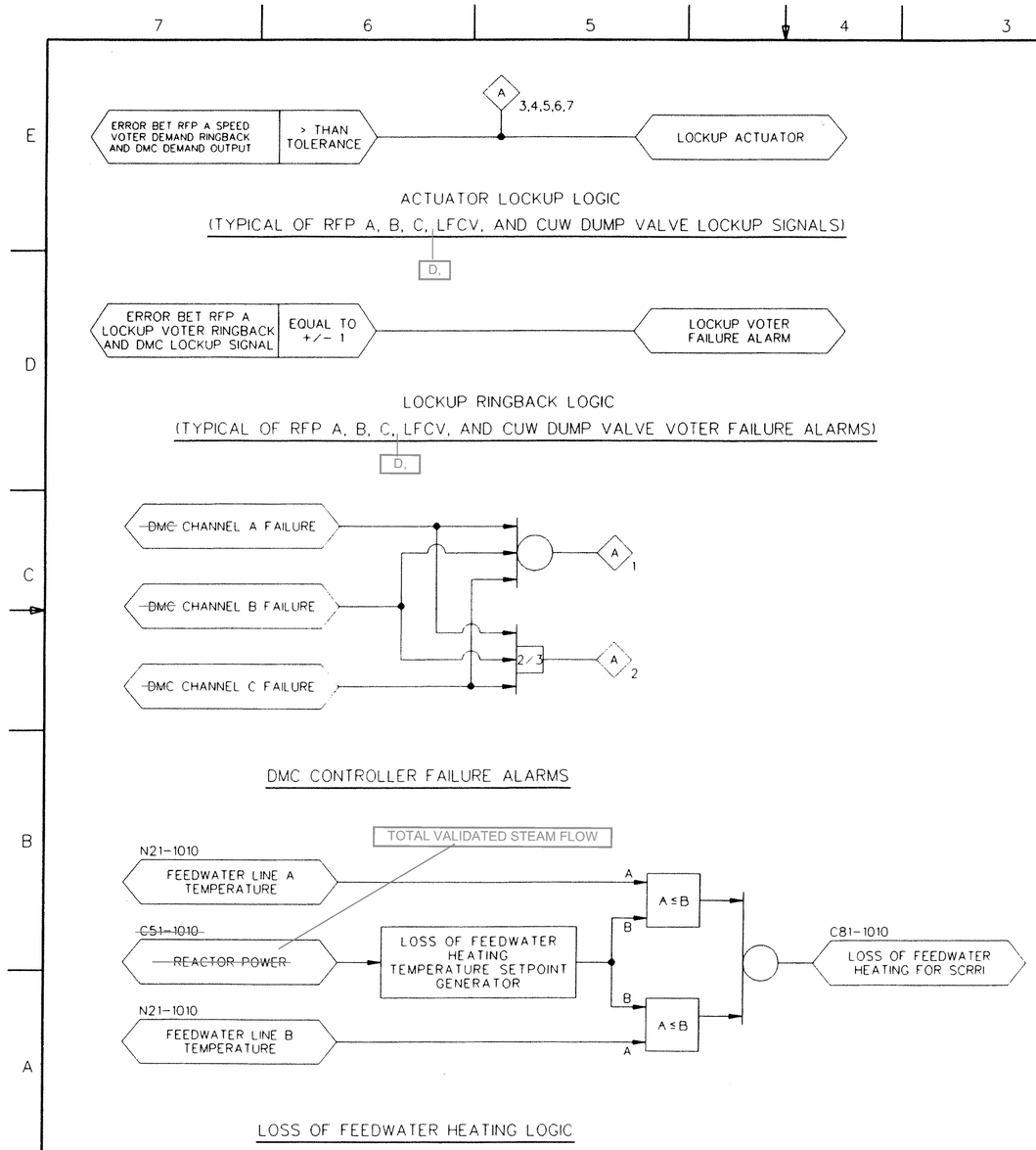

CONTROL SWITCH

OBSERVATIONAL MEASURES		
USE	SPECIFICATION	LOCATION

ANNUNCIATOR		
NO.	INDICATOR	LOCATION
1	FDWC DMC TOLERANT FAILURE	H11-4050
2	FDWC DMC FATAL FAILURE	H11-4050
3	RFP A LOCKUP	H11-4050
4	RFP B LOCKUP	H11-4050
5	RFP C LOCKUP	H11-4050
6	LFCV LOCKUP	H11-4050
7	CUW DUMP VLV LOCKUP	H11-4050

OTHERS			
INSTANT INTERRUPTION COUNTERMEASURE		NEED	
		NOT NEED	
VALVE	INCHING OPERATION	NEED	
		NOT NEED	
	SEATING FORM	OPEN SIDE	
		CLOSED SIDE	
	THERMAL BYPASS	EXIST	
		NOT EXIST	
SWGR POWER SUPPLY OBSERVATION		EXIST	
		NOT EXIST	
ELECTRICAL SOLENOID VALVE POWER SUPPLY		AC V	
		DC V	

FIGURE 7.7-9 FEEDWATER CONTROL SYSTEM IBD (Sheet 14 of 14)

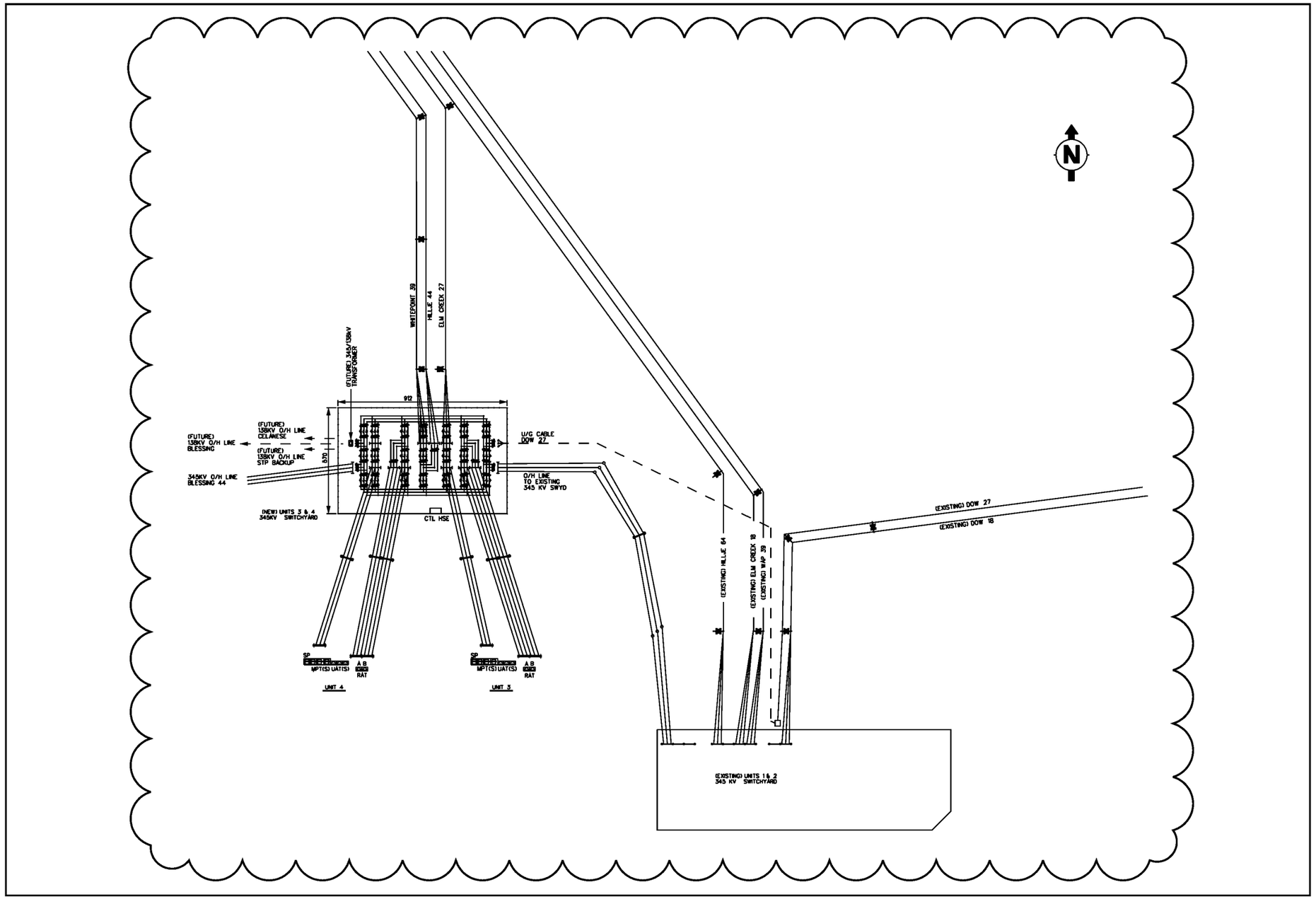

FIGURE 8.2-2 345 kV GENERAL ARRANGEMENT

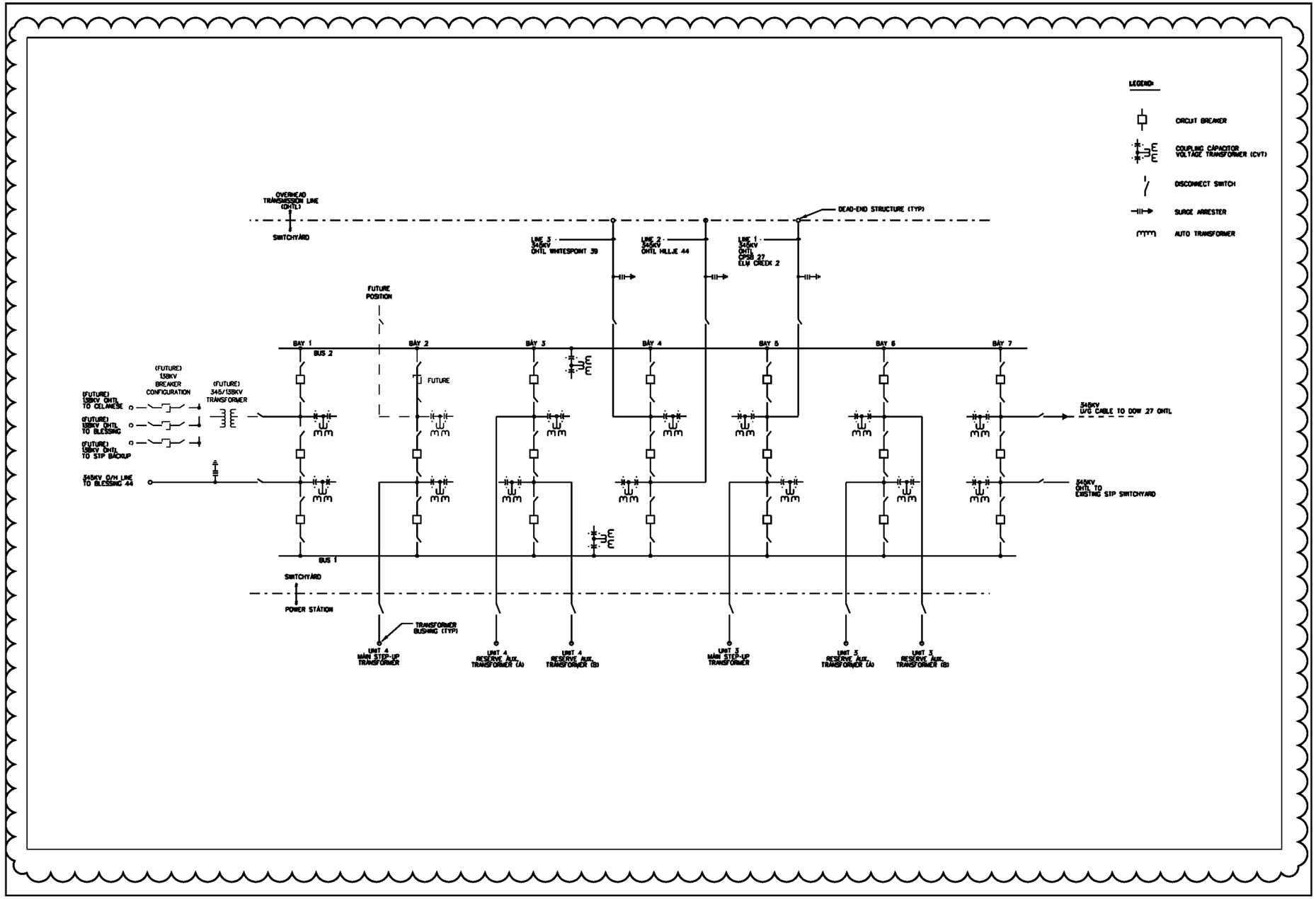

FIGURE 8.2-3 345 kV SWITCHYARD SINGLE LINE DIAGRAM

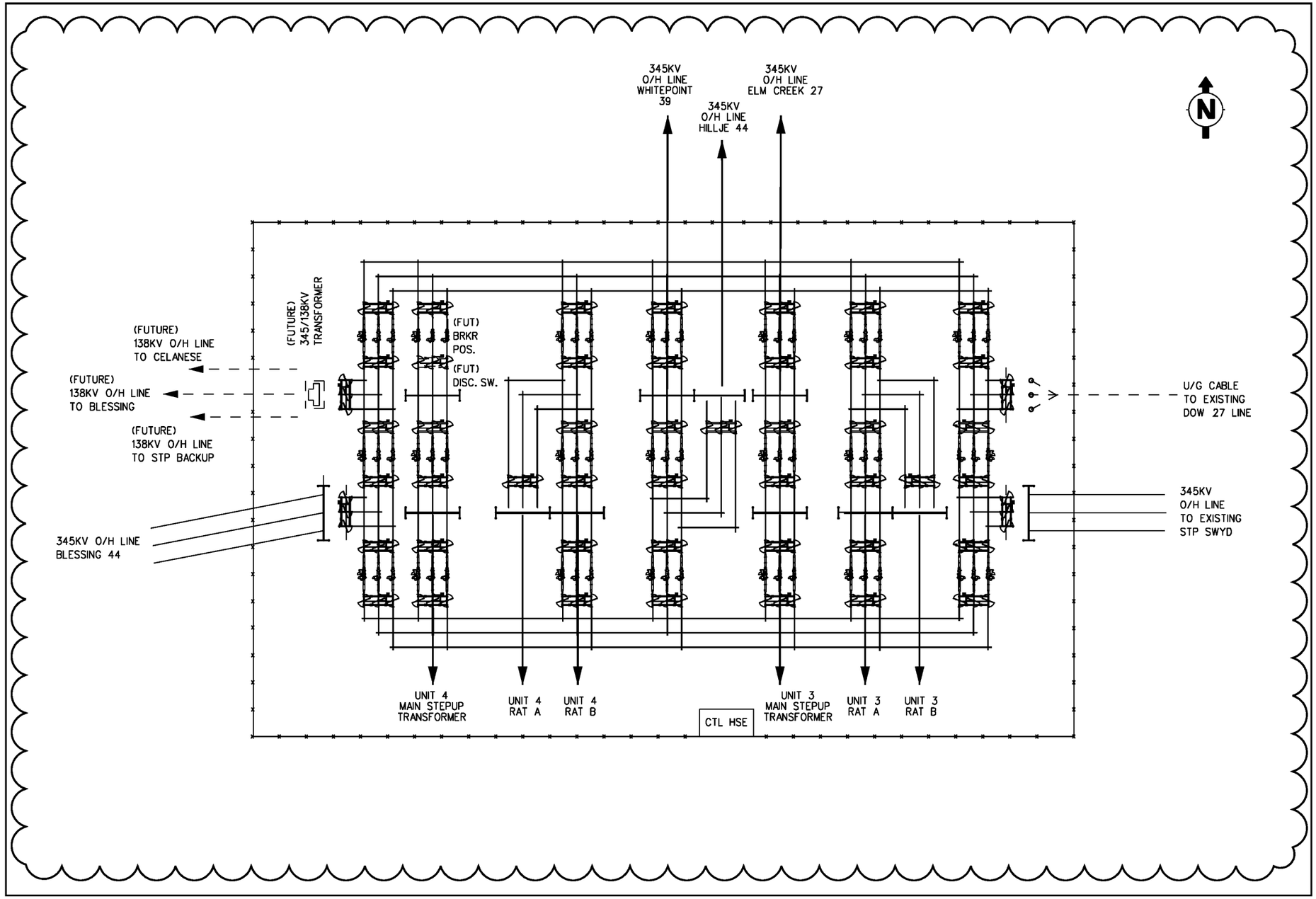

FIGURE 8.2-4 345 kV SWITCHYARD ARRANGEMENT

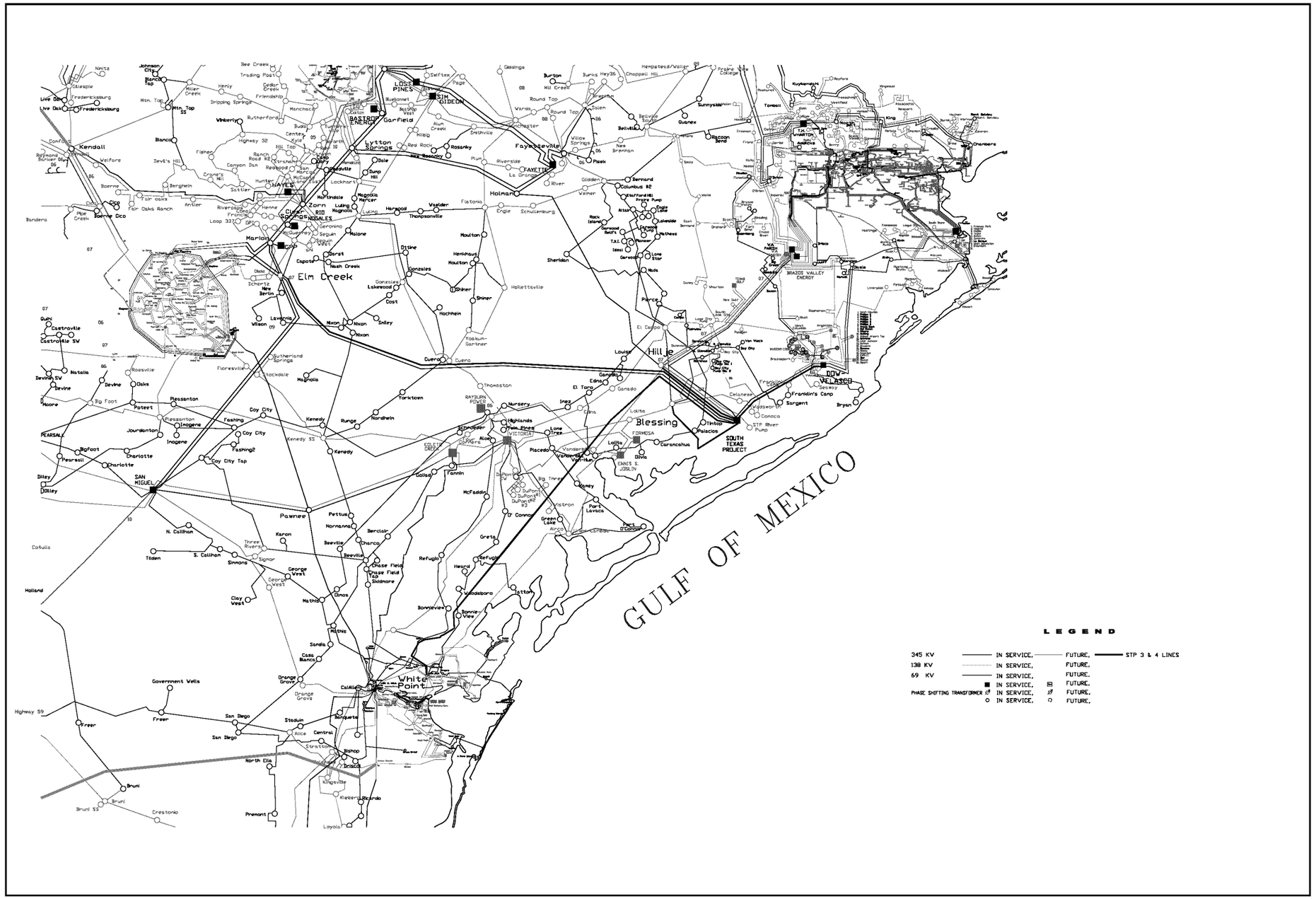

FIGURE 8.2-5 345 kV TRANSMISSION CONFIGURATION MAP

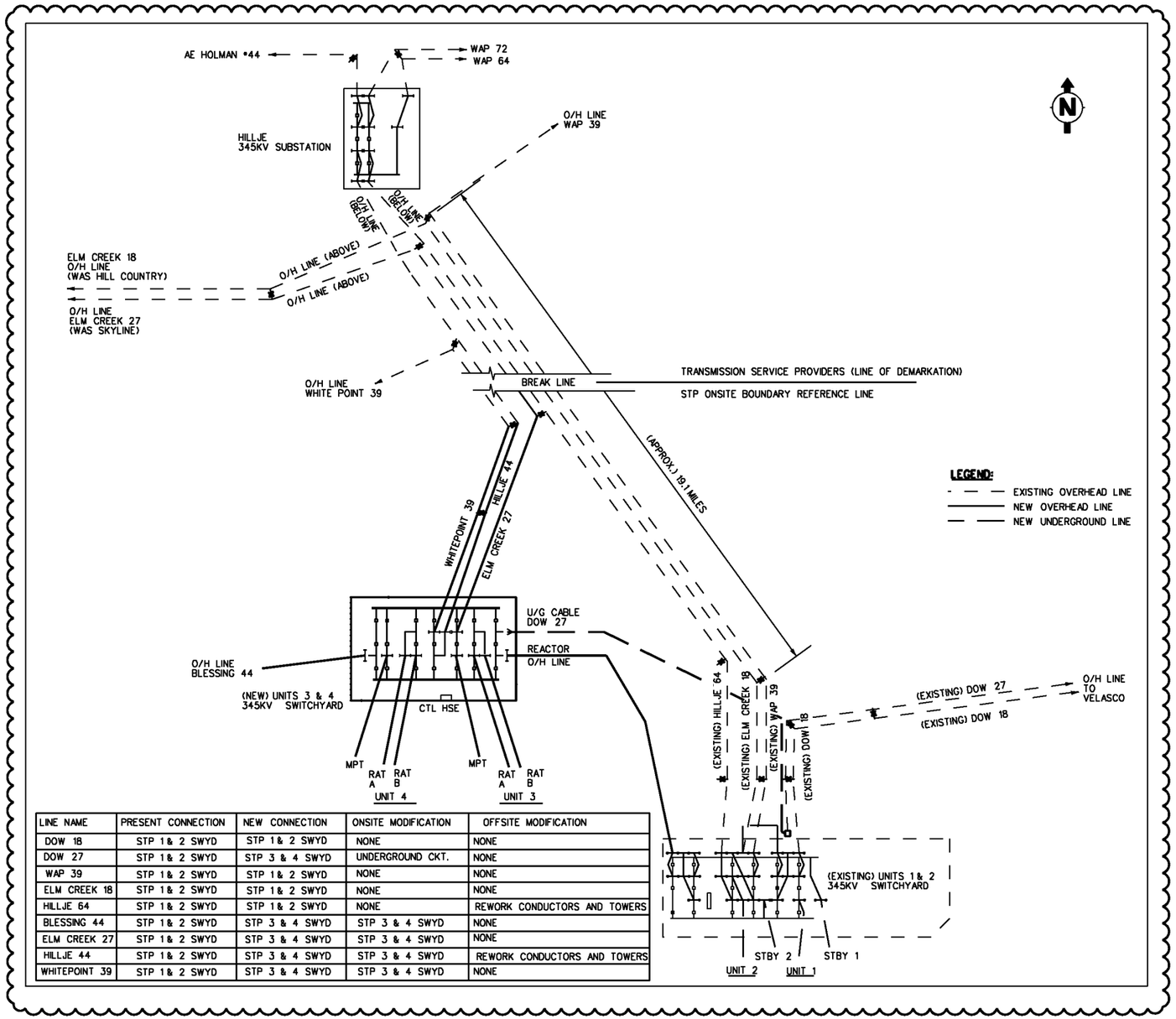

LINE NAME	PRESENT CONNECTION	NEW CONNECTION	ONSITE MODIFICATION	OFFSITE MODIFICATION
DOW 18	STP 1& 2 SWYD	STP 1& 2 SWYD	NONE	NONE
DOW 27	STP 1& 2 SWYD	STP 3 & 4 SWYD	UNDERGROUND CKT.	NONE
WAP 39	STP 1& 2 SWYD	STP 1& 2 SWYD	NONE	NONE
ELM CREEK 18	STP 1& 2 SWYD	STP 1& 2 SWYD	NONE	NONE
HILLJE 64	STP 1& 2 SWYD	STP 1& 2 SWYD	NONE	REWORK CONDUCTORS AND TOWERS
BLESSING 44	STP 1& 2 SWYD	STP 3 & 4 SWYD	STP 3 & 4 SWYD	NONE
ELM CREEK 27	STP 1& 2 SWYD	STP 3 & 4 SWYD	STP 3 & 4 SWYD	NONE
HILLJE 44	STP 1& 2 SWYD	STP 3 & 4 SWYD	STP 3 & 4 SWYD	REWORK CONDUCTORS AND TOWERS
WHITEPOINT 39	STP 1& 2 SWYD	STP 3 & 4 SWYD	STP 3 & 4 SWYD	NONE

FIGURE 8.2-6 TOPOGRAPHIC MAP OF 345 kV TRANSMISSION LINE (BLESSING SE LINE)

NOT FOR PUBLIC RELEASE

FIGURE 8.2-1 POWER DISTRIBUTION ROUTING DIAGRAM (Sheet 1 of 7)

NOT FOR PUBLIC RELEASE

FIGURE 8.2-1 POWER DISTRIBUTION ROUTING DIAGRAM (Sheet 2 of 7)

NOT FOR PUBLIC RELEASE

FIGURE 8.2-1 POWER DISTRIBUTION ROUTING DIAGRAM (Sheet 3 of 7)

NOT FOR PUBLIC RELEASE

FIGURE 8.2-1 POWER DISTRIBUTION ROUTING DIAGRAM (Sheet 4 of 7)

NOT FOR PUBLIC RELEASE

FIGURE 8.2-1 POWER DISTRIBUTION ROUTING DIAGRAM (Sheet 5 of 7)

NOT FOR PUBLIC RELEASE

FIGURE 8.2-1 POWER DISTRIBUTION ROUTING DIAGRAM (Sheet 6 of 7)

NOT FOR PUBLIC RELEASE

FIGURE 8.2-1 POWER DISTRIBUTION ROUTING DIAGRAM (Sheet 7 of 7)

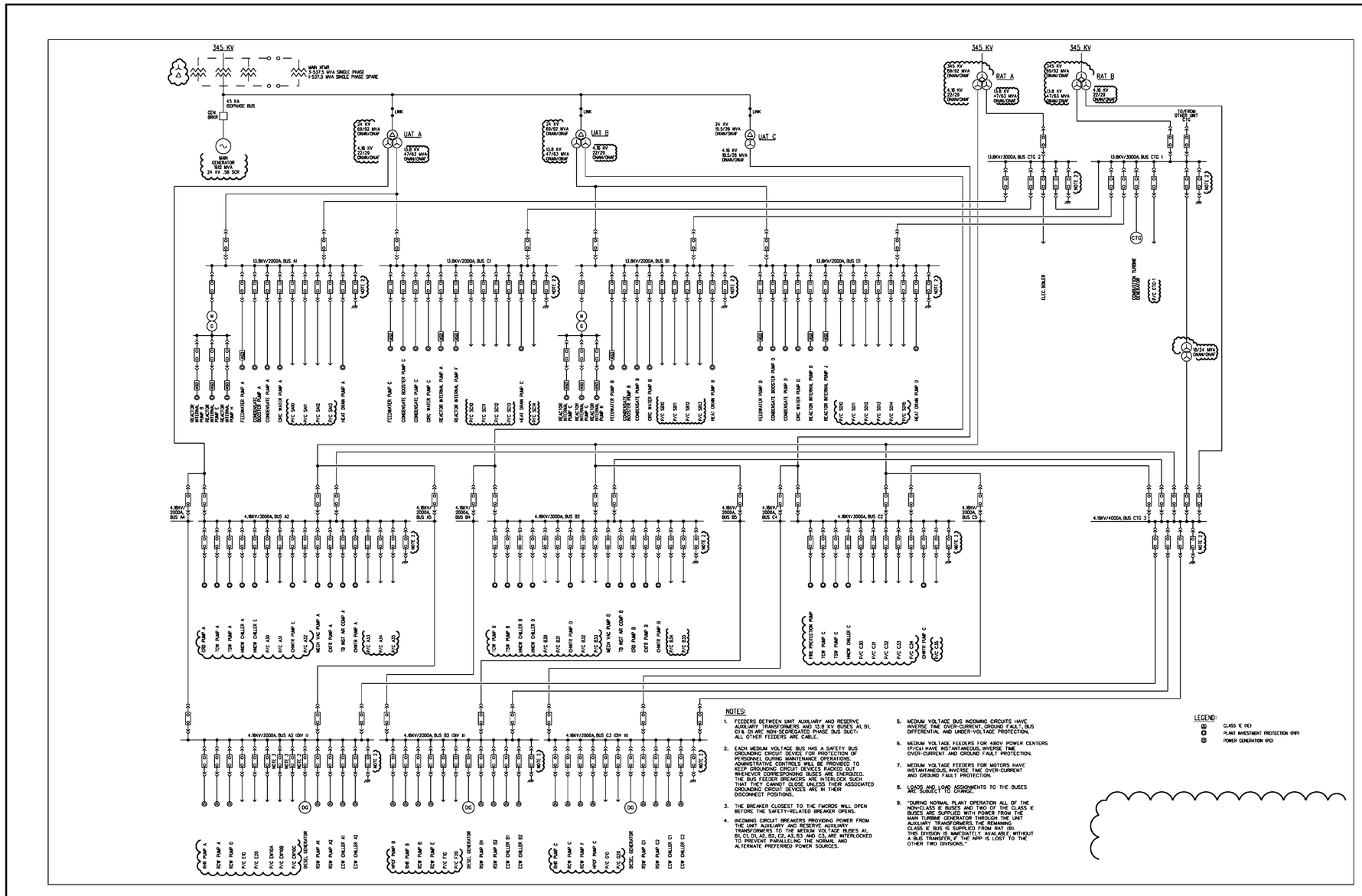

FIGURE 8.3-1 13.8k/V4.16kV POWER DISTRIBUTION SINGLE LINE DIAGRAM (Sheet 1 of 4)

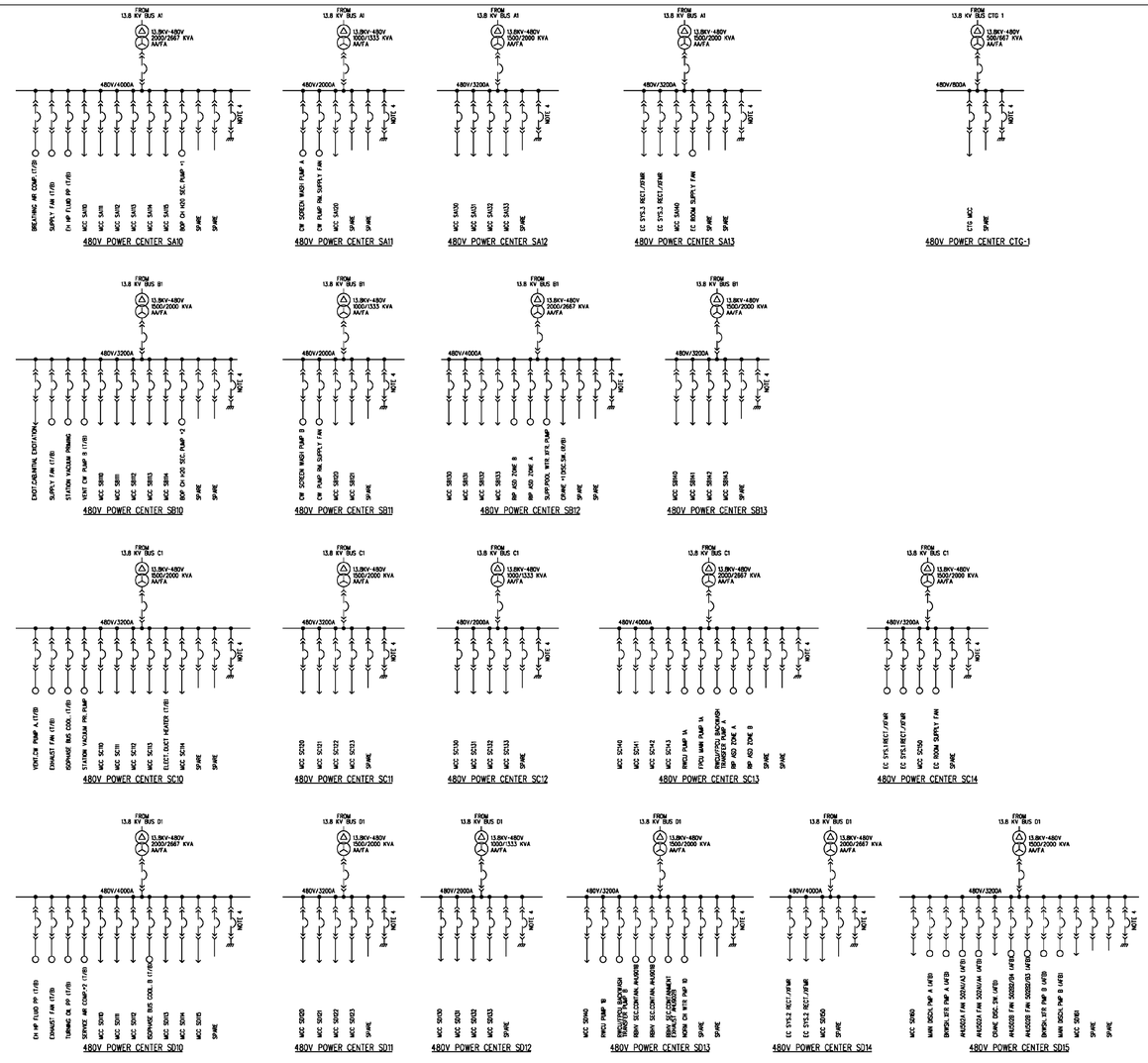

NOTES:

1. 480V POWER CENTER (P/C) CONSISTS OF 13.8KV/480V OR 4.16KV/480V TRANSFORMER AND ASSOCIATED SWITCHGEAR.
2. THE 480V POWER CENTERS ARE SIZED TO SUPPLY MOTOR CONTROL CENTERS (MCC) AND MOTOR LOADS GREATER THAN 100KW, AND UP TO AND INCLUDING 3000KW.
3. 480V BUS INCOMING LINE AND FEEDER CIRCUITS HAVE INVERSE TIME OVER-CURRENT AND GROUND FAULT PROTECTION.
4. EACH 480V BUS HAS A SAFETY BUS GROUNDING CIRCUIT DEVICE FOR PROTECTION OF PERSONNEL DURING MAINTENANCE OPERATIONS. ADMINISTRATIVE CONTROLS WILL BE PROVIDED TO KEEP GROUNDING CIRCUIT DEVICES RACKED OUT WHENEVER CORRESPONDING BUSES ARE ENERGIZED. THE BUS FEEDER DEVICES ARE INTERLOCKED SUCH THAT THEY CANNOT CLOSE UNLESS THEIR ASSOCIATED GROUNDING CIRCUIT DEVICES ARE IN THEIR DISCONNECT POSITIONS.
5. DURING DETAILED DESIGN STAGE, DEPENDING ON THE SPECIFIC REQUIREMENTS, THE POWER CENTERS FED FROM THE SAME 13.8KV PG BUSES WILL BE ARRANGED IN A SYSTEM COMPRISED OF DOUBLE-ENDED AND SINGLE-ENDED POWER CENTERS.

FIGURE 8.3-1 13.8k/V4.16kV POWER DISTRIBUTION SINGLE LINE DIAGRAM (Sheet 2 of 4)

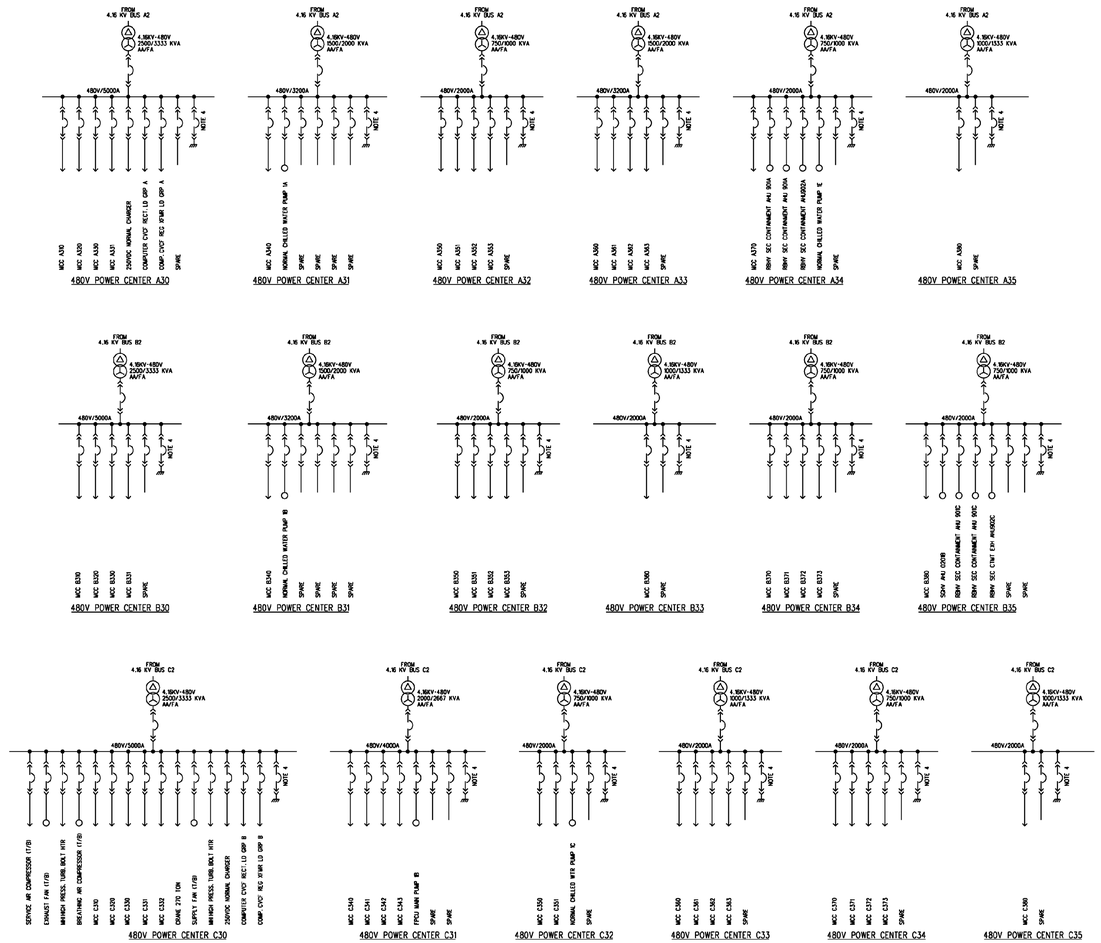

NOTES:

1. 480V POWER CENTER (P/C) CONSISTS OF 13.8KV/480V OR 4.16KV/480V TRANSFORMER AND ASSOCIATED SWITCHGEAR.
2. THE 480V POWER CENTERS ARE SIZED TO SUPPLY MOTOR CONTROL CENTERS (MCC) AND MOTOR LOADS GREATER THAN 100KW, AND UP TO AND INCLUDING 300KW.
3. 480V BUS INCOMING LINE AND FEEDER CIRCUITS HAVE INVERSE TIME OVER-CURRENT AND GROUND FAULT PROTECTION.
4. EACH 480V BUS HAS A SAFETY BUS GROUNDING CIRCUIT DEVICE FOR PROTECTION OF PERSONNEL DURING MAINTENANCE OPERATIONS. ADMINISTRATIVE CONTROLS WILL BE PROVIDED TO KEY GROUNDING DEVICES TO ENSURE THAT ONLY DEAD OR CORRESPONDING BUSES ARE ENERGIZED. THE BUS FEEDER DEVICES ARE INTER-LOCKED SUCH THAT THEY CANNOT CLOSE UNLESS THEIR ASSOCIATED GROUNDING CIRCUIT DEVICES ARE IN THEIR DISCONNECT POSITIONS.
5. DURING DETAILED DESIGN STAGE, DEPENDING ON THE SPECIFIC REQUIREMENTS, THE POWER CENTERS FED FROM THE SAME 4.16kV PIP BUSES WILL BE RE-ARRANGED IN A SYSTEM COMPRISED OF DOUBLE-ENDED AND SINGLE-ENDED POWER CENTERS.

FIGURE 8.3-1 13.8k/V4.16kV POWER DISTRIBUTION SINGLE LINE DIAGRAM (Sheet 3 of 4)

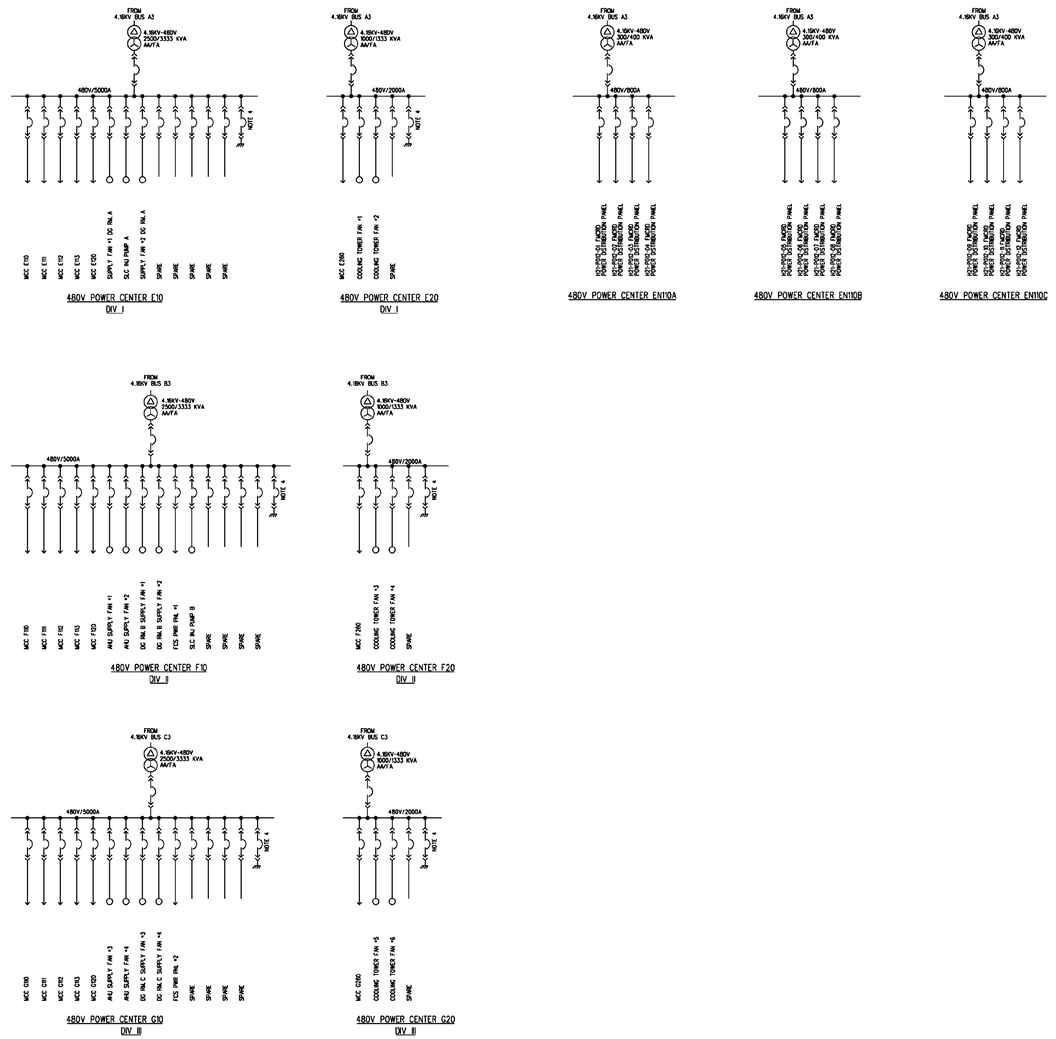

NOTES:

1. 480V POWER CENTER (P/C) CONSISTS OF 13.8KV/480V OR 4.16KV/480V TRANSFORMER AND ASSOCIATED SWITCHGEAR.
2. THE 480V POWER CENTERS ARE SIZED TO SUPPLY MOTOR CONTROL CENTERS (MCC) AND MOTOR LOADS GREATER THAN 100KW, AND UP TO AND INCLUDING 300KW.
3. 480V BUS INCOMING LINE AND FEEDER CIRCUITS HAVE INVERSE TIME OVER-CURRENT AND GROUND FAULT PROTECTION.
4. EACH 480V BUS HAS A SAFETY BUS GROUNDING CIRCUIT DEVICE FOR PROTECTION OF PERSONNEL DURING MAINTENANCE OPERATIONS. ADMINISTRATIVE CONTROLS WILL BE PROVIDED TO KEEP GROUNDING CIRCUIT DEVICES RACKED OUT WHENEVER CORRESPONDING BUSES ARE ENERGIZED. THE BUS FEEDER DEVICES ARE INTERLOCKED SUCH THAT THEY CANNOT CLOSE UNLESS THEIR ASSOCIATED GROUNDING CIRCUIT DEVICES ARE IN THEIR DISCONNECT POSITIONS.

FIGURE 8.3-1 13.8k/V4.16kV POWER DISTRIBUTION SINGLE LINE DIAGRAM (Sheet 4 of 4)

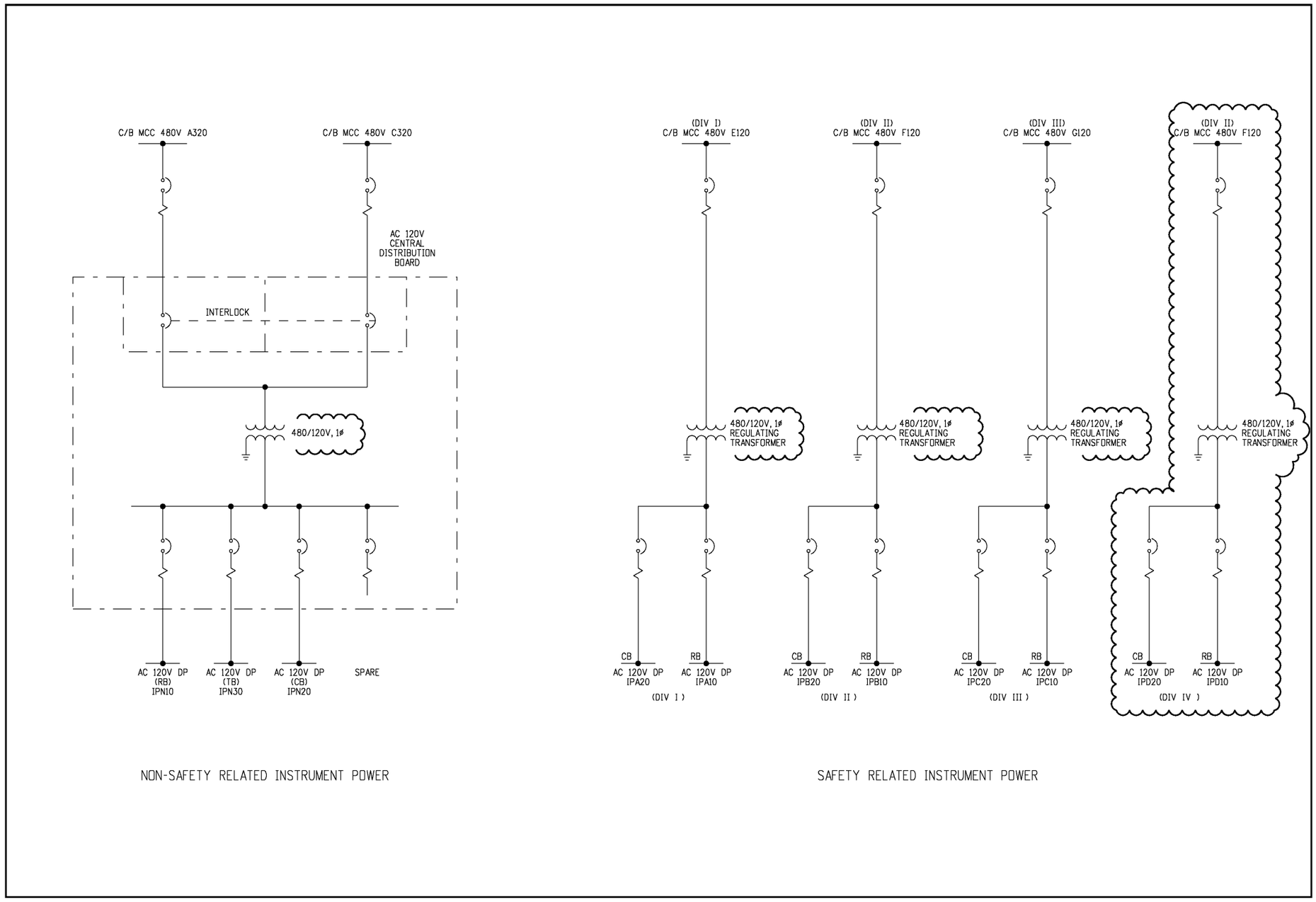

FIGURE 8.3-2 INSTRUMENT AND CONTROL POWER SUPPLY SYSTEM SINGLE LINE DIAGRAM (Sheet 1 of 1)

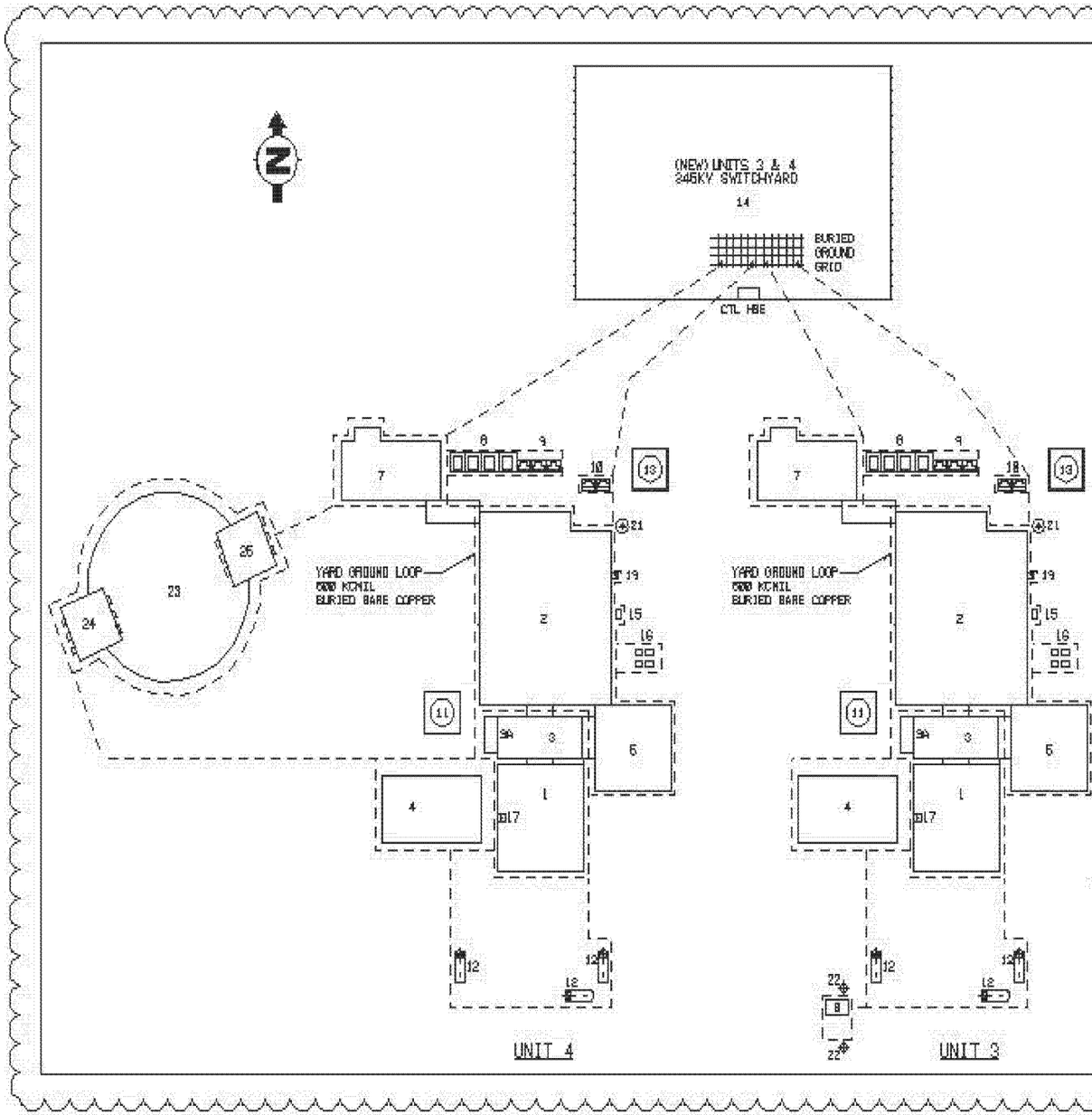

FACILITY LEGEND	
REF	DESCRIPTION
1	REACTOR BUILDING
2	TURBINE BUILDING
3	CONTROL BUILDING
3A	CONTROL BUILDING ANNEX
4	RADWASTE BUILDING
5	SERVICE BUILDING
6	FIRE PROTECTION PUMPHOUSE
7	HOT MACHINE SHOP
8	MAIN TRANSFORMERS
9	UNIT AUXILIARY TRANSFORMER
10	RESERVE TRANSFORMER
11	CONDENSATE STORAGE TANK
12	EMERGENCY D/G FUEL OIL TANK
13	COMBUSTION TURBINE FUEL OIL TANK
14	SWITCHYARD
15	COMBUSTION TURBINE GENERATOR AUX TRANSFORMER
16	RFP VARIABLE SPEED DRIVE ELECTRICAL EQUIPMENT
17	PLANT STACK
18	NOT USED
19	COMBUSTION TURBINE EXHAUST STACK
20	NOT USED
21	VENTILATION STACK
22	FIREWATER STORAGE TANK
23	ULTIMATE HEAT SINK
24	UHS UNIT 3 PUMPHOUSE
25	UHS UNIT 4 PUMPHOUSE

NOTE:
STRUCTURES AND BUILDING TO BE GROUNDED
TO THE YARD LOOP PER THE FOLLOWING:

A- ELECTRICAL GROUNDING REQUIREMENTS SPECIFICATION

B- LIGHTNING PROTECTION SPECIFICATION

FIGURE 8A-1 SITE PLAN (GROUNDING) (Sheet 1 of 1)

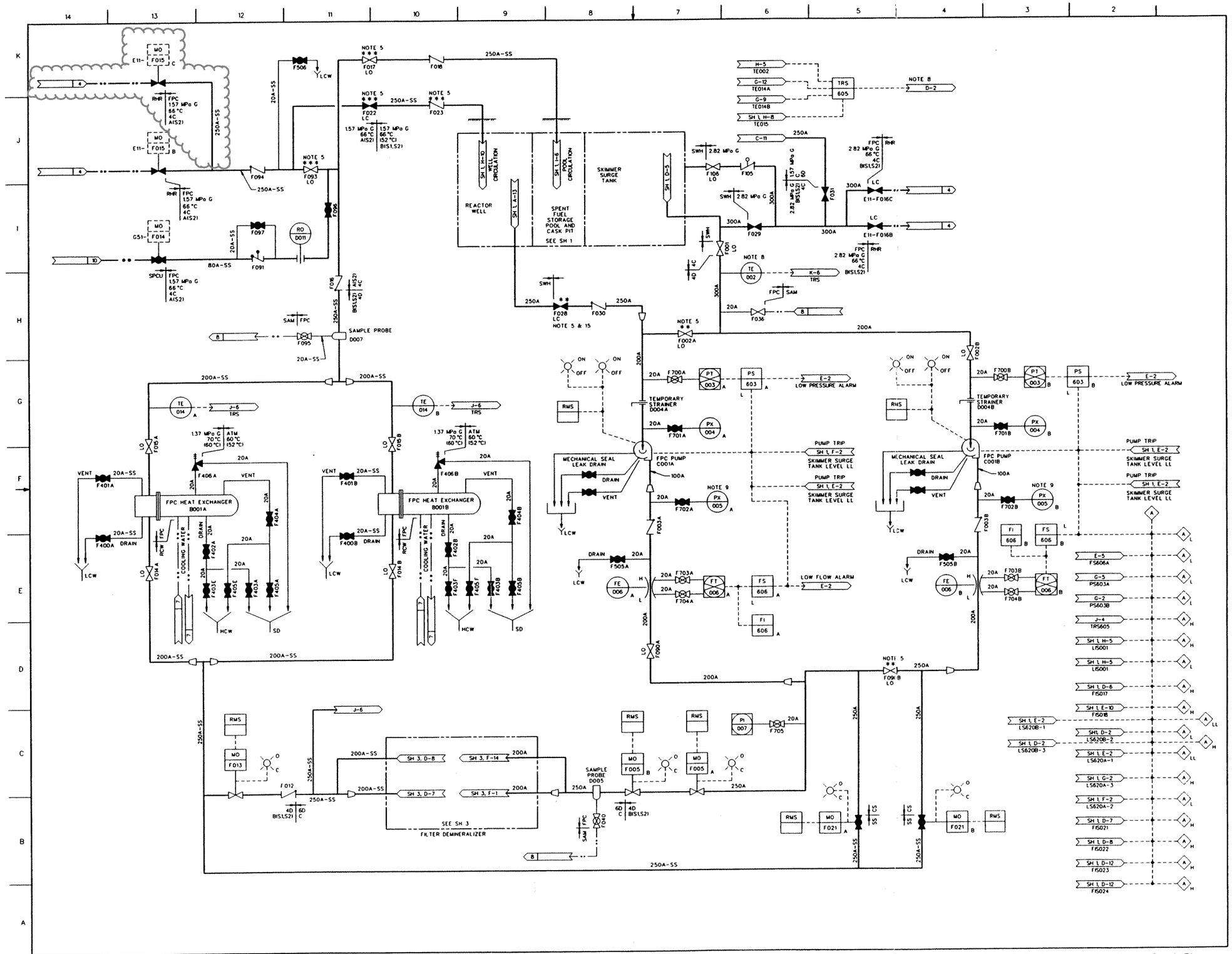

FIGURE 9.1-1 FUEL POOL COOLING AND CLEANUP SYSTEM P&ID (Sheet 2 of 3)

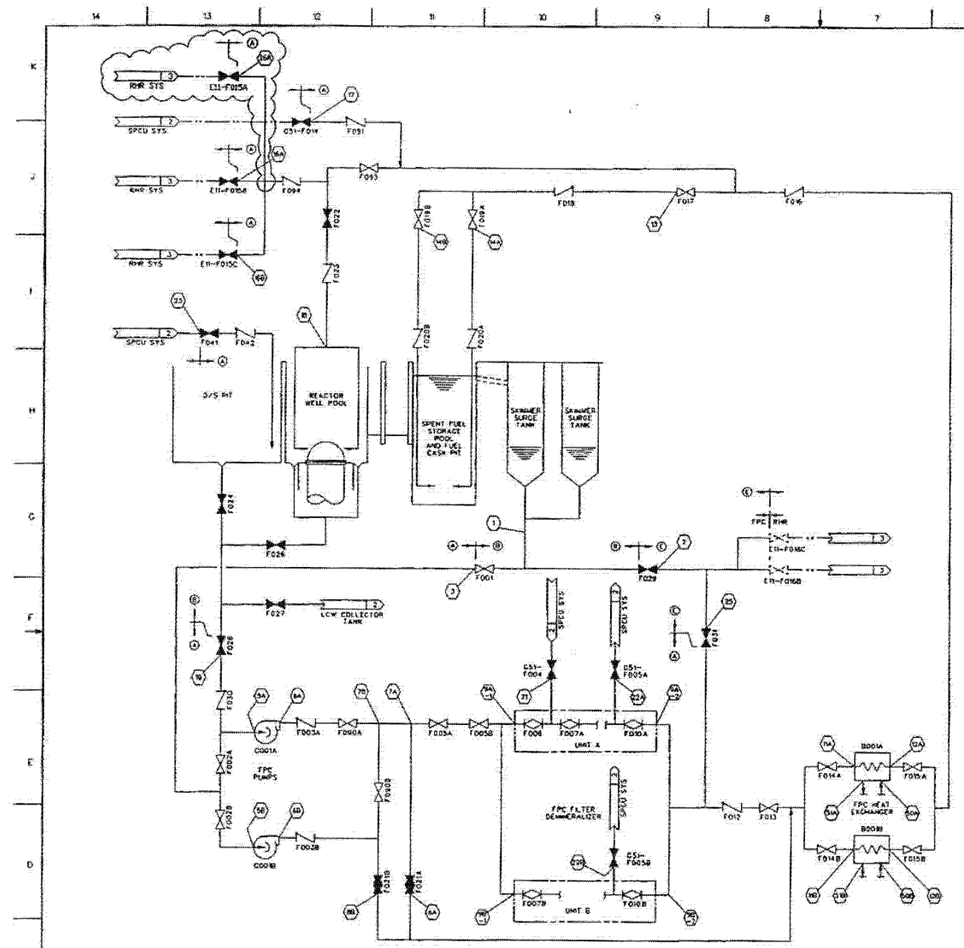

MODE A FPC SYSTEM FLOW DIAGRAM

BOUNDARY CONDITION		(A)	(B)	(C)	(D)	(E)
DESIGN PRESSURE	MPa (G)	1.57	STATIC WATER HEAD	1.43	2.82	2.82
DESIGN TEMPERATURE	(°C)	66	66	66	66	66

NOTES

1. [*] TABLE VALUES NOT AVAILABLE UNTIL DETAILED DESIGN IS COMPLETE.
2. EXCHANGED HEAT LOADS FOR MODES A AND B APPLY TO SYSTEM HEAT EXCHANGERS AFTER REACTOR WELL/FUEL STORAGE POOL GATE IS IN CLOSED POSITION.
3. IN MODE B, RHR OPERATES IN PARALLEL WITH FPC SYSTEM.
4. MODE D, REFUELING OPERATION WATER TO FILL REACTOR WELL DISCHARGES THROUGH DIFFUSERS AND WALL SPARGER OR EXPOSED WALL WETTING METHOD.
5. DURING MODES E-1, E-2, E-3 AND G, SPENT FUEL STORAGE POOL TEMPERATURE MAY EXCEED 52°C FOR SHORT PERIOD.
6. 5 $\frac{A}{B}$ MEANS 5A AND 5B, EACH AT VALUE SHOWN

   5A/B1 MEANS 5A OR 5B AT VALUE SHOWN BUT NOT CONCURRENTLY.
7. MODE C, FAILURE OF A OR B TRAIN IS POSTULATED.
8. DRAIN OPERATING MODES:

   MODE E-1, TWO FPC PUMPS ARE OPERATING TO DRAIN D/S PIT AND REACTOR WELL, DISCHARGE THE WATER FOR TREATMENT BY F/D A AND F/D B BEFORE RELEASE INTO THE SUPPRESSION POOL THROUGH THE SPCU SYSTEM PIPING.

   MODE E-2, ONE FPC PUMP IS OPERATING TO DRAIN REACTOR WELL AND DISCHARGE THE WATER FOR TREATMENT IN ONE F/D BEFORE RELEASE INTO THE SUPPRESSION POOL THROUGH THE SPCU SYSTEM PIPING. THE SECOND FPC PUMP IS OPERATING TO REMOVE WATER FROM THE SPENT FUEL STORAGE POOL SKIMMER TANKS AND DISCHARGING THE WATER THROUGH THE F/D BYPASS PIPE INTO THE FPC HEAT EXCHANGERS TO COOL IT BEFORE RETURN TO THE SPENT FUEL STORAGE POOL DIFFUSERS.

   MODE E-3, TWO FPC PUMPS ARE OPERATING TO DRAIN THE D/S PIT AND REACTOR WELL AND DISCHARGE THE WATER FOR TREATMENT IN TWO F/D'S BEFORE RELEASE TO THE LCW COLLECTOR TANK OF RADWASTE SYSTEM THROUGH THE RHR SYSTEM.
9. IN MODE B, ONE RHR PUMP AND HEAT EXCHANGER IS OPERATED FOR BACKUP COOLING BECAUSE FPC SYSTEM ALONE CAN NOT COOL POOL SUFFICIENTLY.
10. IN MODE D, RHR SHUTDOWN COOLING RETURN WATER IS INJECTED THROUGH REACTOR WELL DIFFUSERS.
11. IN MODE F, 1 FPC PUMP (A) OR (B) IS OPERATED FOR FUEL POOL COOLING AND SPCU IS OPERATED FOR S/P CLEANUP THROUGH F/D (A).
12. IN MODE G, 1 FPC PUMP (A) OR (B) IS OPERATED FOR FUEL POOL COOLING AND S/P WATER IS SUPPLIED TO D/S PIT THROUGH F/D BY SPCU PUMP OPERATION.
13. VALVES F014A, F014B, F027 AND G41-F016 ARE NOT SHOWN IN THE MODE TABLES BECAUSE THEY DO NOT OPEN/CLOSE FOR ANY OPERATING MODE.
14. FLOWS SHOWN FOR MODE E-3 ARE TO BE FINALIZED AFTER DETAIL DESIGN IS COMPLETE.

REFERENCE DOCUMENTS	MPL NO.
1. FUEL POOL COOLING CLEANUP SYS P&ID	G41-1010
2. SUPPRESSION POOL CLEANUP SYSTEM P&ID	G51-1010
3. RESIDUAL HEAT REMOVAL SYSTEM P&ID	E11-1010
4. RADWASTE SYSTEM P&ID	K17-1010

MPL NO. G41-1020

FIGURE 9.1-2 FUEL POOL COOLING AND CLEANUP SYSTEM PFD (SHEET 1 OF 2)

MODE A NORMAL HEAT LOAD OPERATING MODE

POSITION ⬡	1	3	5^{A}_{B}	6^{A}_{B}	7A	7B	9^{A-1}_{B-1}	9^{A-2}_{B-2}	11^{A}_{B}	12^{A}_{B}	13	14^{A}_{B}	50^{A}_{B}	51^{A}_{B}
FLOW (m^3/h)	500	500	250	250	500	500	250	250	250	250	500	250		
PRESS (MPa G)	*	*	*	*	*	*	*	*	*	*	*	*		
TEMP (°C)	52	←						→	52	45.4	45.4	45.4		
Max ALLOWABLE PRESS LOSS (m)			TDH = 80				ΔP = 41		ΔP = 7					

EXCHANGED HEAT/UNIT 6.9 x 10^6 kJ/h (21 DAYS AFTER SHUTDOWN) NOTE 2

MODE B MAXIMUM HEAT LOAD OPERATING MODE NOTE 9

POSITION ⬡	1	2	3	5^{A}_{B}	6^{A}_{B}	7A	7B	9^{A-1}_{B-1}	9^{A-2}_{B-2}	11^{A}_{B}	12^{A}_{B}	13	16	14^{A}_{B}	50^{A}_{B}	51^{A}_{B}
FLOW (m^3/h)	850	350	500	250	250	500	500	250	250	250	250	850	350	425		
PRESS (MPa G)	*	*	*	*	*	*	*	*	*	*	*	*	*	*		
TEMP (°C)	60	←							→	60	53.4	51.5	48.9	51.5		

EXCHANGED HEAT/UNIT 30.14 x 10^6 kJ/h (21 DAYS AFTER SHUTDOWN) NOTE 2

FPC Hx/UNIT 6.9 x 10^6 kJ/h AND RHR Hx 16.32 x 10^6 kJ/h

MODE C COOLING MODE AFTER EARTHQUAKE (POSTULATED SINGLE FAILURE) NOTE 7

POSITION ⬡	1	3	5A	6A	7A	8A	11A	12A	13	14^{A}_{B}	50A	51A
FLOW (m^3/h)	250	250	250	250	250	250	250	250	250	125		
PRESS (MPa G)	*	*	*	*	*	*	*	*	*	*		
TEMP (°C)	62.7	←				→	62.7	51.9	51.9	51.9		

EXCHANGED HEAT 11.22 x 10^6 kJ/h (45 DAYS AFTER SHUTDOWN)

MODE D REFUELING OPERATING MODE NOTE 10

POSITION ⬡	1	3	5^{A}_{B}	6^{A}_{B}	7A	7B	9^{A-1}_{B-1}	9^{A-2}_{B-2}	11^{A}_{B}	12^{A}_{B}	13	50^{A}_{B}	51^{A}_{B}	16A(B)	18
FLOW (m^3/h)	500	500	250	250	500	500	250	250	250	250	500			954	954
PRESS (MPa G)	*	*	*	*	*	*	*	*	*	*	*			*	*
TEMP (°C)	Max 52	←						→	Max 52	Max 45.4	Max 45.4			Max 52	Max 52

MODE E1: DRAIN OPERATING MODE NOTES 5 & 8

POSITION ⬡	19	5^{A}_{B}	6^{A}_{B}	7A	7B	9^{A-1}_{B-1}	22^{A}_{B}
FLOW (m^3/h)	500	250	250	500	500	250	250
PRESS (MPa G)	*	*	*	*	*	*	*
TEMP (°C)	Max 52	←				→	Max 52

MODE E3: DRAIN OPERATING MODE NOTES 5, 8 & 14

POSITION ⬡	19	5^{A}_{B}	6^{A}_{B}	7A	7B	9^{A-1}_{B-1}	9^{A-2}_{B-2}	25
FLOW (m^3/h)	500	250	250	500	500	250	250	500
PRESS (MPa G)	*	*	*	*	*	*	*	*
TEMP (°C)	Max 52	←					→	Max 52

MODE E2 DRAIN OPERATING MODE NOTES 5 & 8

POSITION ⬡	19	5A	6A	7A	7B	9A-1 (B-1)	22A(B)	1	3	4	5B	6B	8A	11^{A}_{B}	12^{A}_{B}	13	14^{A}_{B}	50^{A}_{B}	51^{A}_{B}
FLOW (m^3/h)	250	250	250	250	250	250	250	250	250	250	250	250	250	125	125	250	125		
PRESS (MPa G)	*	*	*	*	*	*	*	*	*	*	*	*	*	*	*	*	*		
TEMP (°C)	Max 52	←											→	Max 52	Max 42.2	Max 42.2	Max 42.2		

MODE F SUPPRESSION POOL CLEANUP OPERATING MODE NOTE 11

POSITION ⬡	1	3	5A(B)	6A(B)	7A	7B	9B-1	9B-2	11^{A}_{B}	12^{A}_{B}	13	14^{A}_{B}	50^{A}_{B}	51^{A}_{B}	21	22A
FLOW (m^3/h)	250	250	250	250	250	250	250	250	125	125	250	125			250	250
PRESS (MPa G)	*	*	*	*	*	*	*	*	*	*	*	*			*	*
TEMP (°C)	53.7	←						→	53.7	42.9	42.9	42.9			Max 35	Max 35

EXCHANGED HEAT 11.22 x 10^6 kJ/h (45 DAYS AFTER SHUTDOWN)

MODE G: D/S PIT AND REACTOR WELL FILL OPERATING MODE NOTES 5 & 12

POSITION ⬡	1	3	5A(B)	6A(B)	7A	7B	9B-1	9B-2	11^{A}_{B}	12^{A}_{B}	13	14^{A}_{B}	50^{A}_{B}	51^{A}_{B}	21	22A	23
FLOW (m^3/h)	250	250	250	250	250	250	250	250	125	125	250	125			250	250	250
PRESS (MPa G)	*	*	*	*	*	*	*	*	*	*	*	*			*	*	*
TEMP (°C)	Max 52	←									→	Max 52			Max 35	Max 35	Max 35

VALVE OPENING/CLOSING CONDITION NOTE 13

	F001	F002A	F002B	F090A	F090B	F021A	F021B	F005 A,B	F013	F014A	F014B	F015A	F015B	F017	F022	F024	F026	F028	F029	F041	F093	F006	F010A	G51-F004	G51-F005A	F007B	F010B	G51-F005B	E11-F015B	E11-F015C	E11-F016B	E11-F016C	F031
MODE A	O	O	O	O	O	x	x	O	O	O	O	O	O	O	x	x	x	x	x	x	O	O	O	x	x	O	O	x	x	x	x	x	x
MODE B	O	O	O	O	O	x	x	O	O	O	O	O	O	O	x	x	x	x	O	x	O	O	O	x	x	O	O	x	O/x	x/O	O/x	x/O	x
MODE C	O	O/x	x/O	O	O	P/x	x/P	x	x	O/x	x/O	O/x	x/O	O	x	x	x	x	x	x	O	O	O	x	x	O	O	x	x	x	x	x	x
MODE D	O	O	O	O	O	x	x	O	O	O	O	O	O	O	O	x	x	x	x	x	x	O	O	x	x	O	O	x	O/x	x/O	x	x	x
MODE E1	x	O	O	O	O	x	x	O	O	O	O	O	O	O	x	O	O	O	x	x	O	O	x	x	O	O	x	O	x	x	x	x	x
MODE E2	O	x	O	O	x	x	P	O	O	O	O	O	O	O	x	x	O	O	x	x	O	O/x	x	x	O/x	x/O	x	x/O	x	x	x	x	x
MODE E3	x	O	O	O	O	x	x	O	x	O	O	O	O	O	x	O	O	O	x	x	O	O	O	x	x	O	O	x	x	x	O/x	x/O	O
MODE F	O	O/x	x/O	O	O	x	x	O	O	O	O	O	O	O	x	x	x	x	x	x	O	x	x	O	O	O	O	x	x	x	x	x	x
MODE G	O	O/x	x/O	O	O	x	x	O	O	O	O	O	O	O	x	x	x	x	x	O	O	x	x	O	O	O	O	x	x	x	x	x	x

O : OPEN P : PARTIALLY OPEN x : CLOSE

FIGURE 9.1-2 FUEL POOL COOLING AND CLEANUP SYSTEM PFD (Sheet 2 of 2)

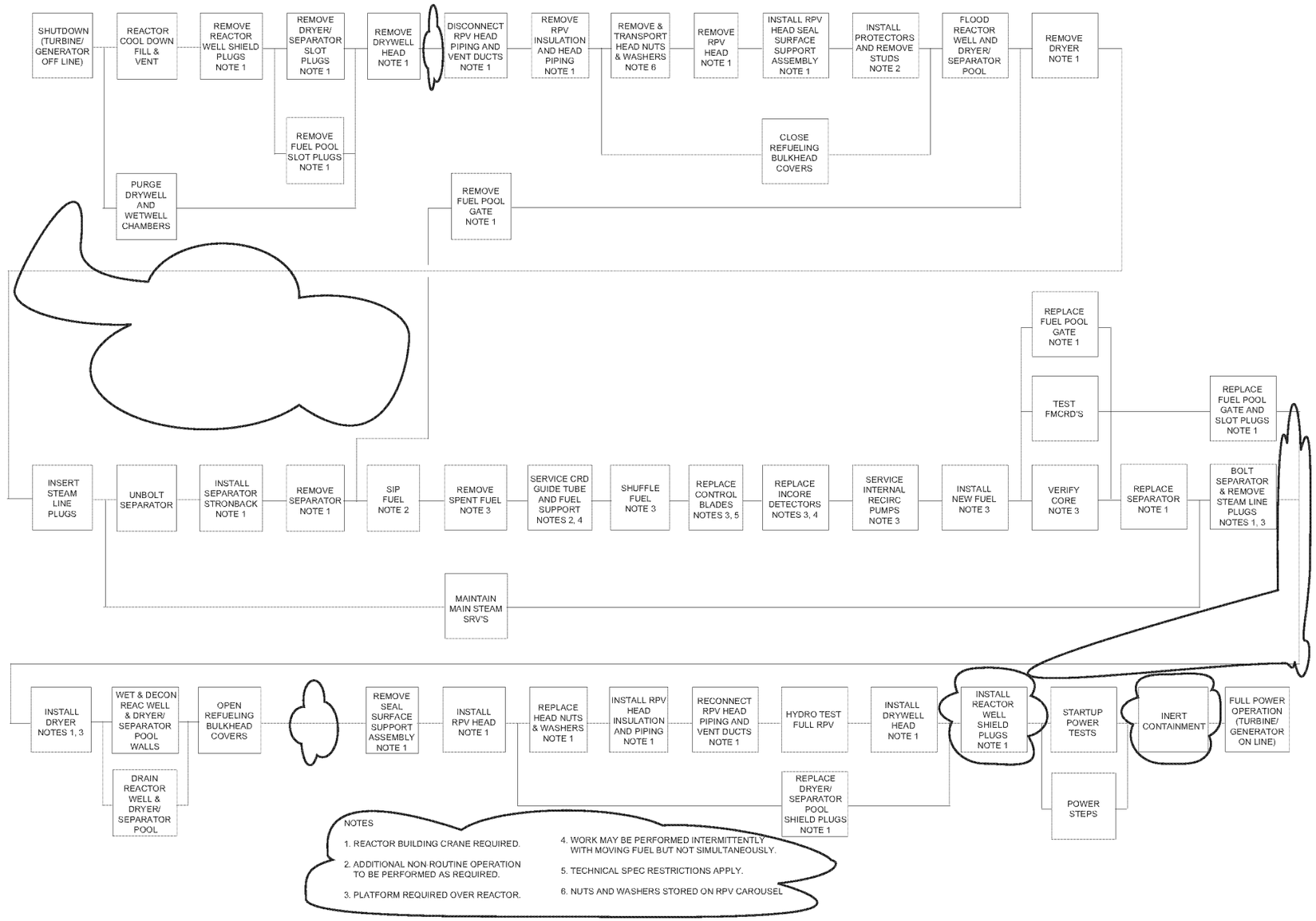

FIGURE 9.1-12 PLANT REFUELING AND SERVICING SEQUENCE

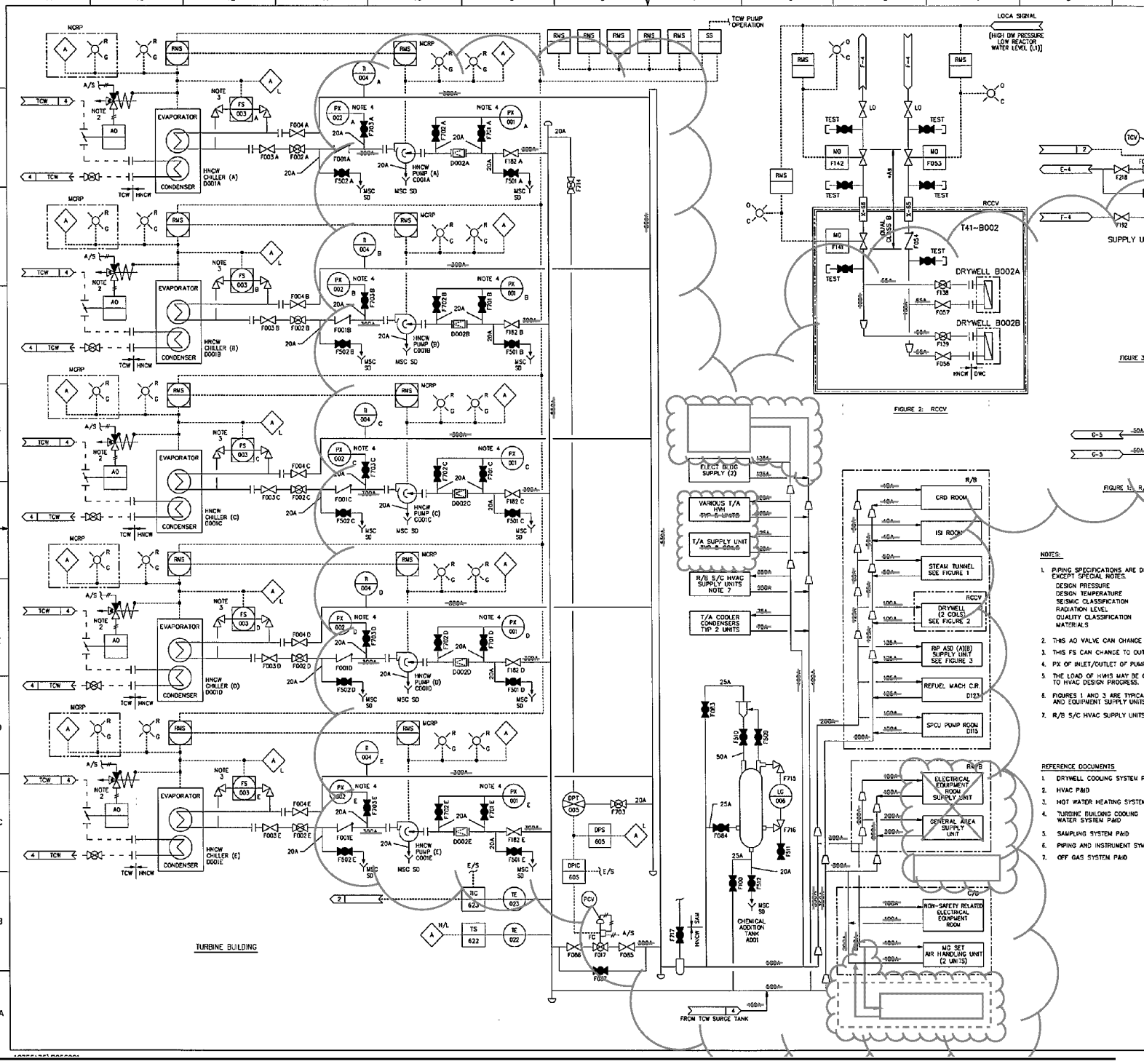
TURBINE BUILDING
EVAPORATOR
CONDENSER
HNCW CHILLER (A) D001A
HNCW CHILLER (B) D001B
HNCW CHILLER (C) D001C
HNCW CHILLER (D) D001D
HNCW CHILLER (E) D001E
HNCW PUMP (A) C001A
HNCW PUMP (B) C001B
HNCW PUMP (C) C001C
HNCW PUMP (D) C001D
HNCW PUMP (E) C001E
TCW PUMP OPERATION
LOCA SIGNAL
(HIGH DW PRESSURE LOW REACTOR WATER LEVEL (L1))
RCCV
T41-B002
DRYWELL B002A
DRYWELL B002B
FIGURE 2: RCCV
ELECT BLDG SUPPLY (2)
VARIOUS T/A HVH
T/A SUPPLY UNIT
R/B S/C HVAC SUPPLY UNITS NOTE 7
T/A COOLER CONDENSERS TYP 2 UNITS
CHEMICAL ADDITION TANK A001
FROM TCW SURGE TANK
R/B
CRD ROOM
ISI ROOM
STEAM TUNNEL SEE FIGURE 1
DRYWELL (2 COILS) SEE FIGURE 2
RP ASD (A)(B) SUPPLY UNIT SEE FIGURE 3
REFUEL MACH C.R.
SPCU PUMP ROOM
ELECTRICAL EQUIPMENT ROOM SUPPLY UNIT
GENERAL AREA SUPPLY UNIT
NON-SAFETY RELATED ELECTRICAL EQUIPMENT ROOM
MG SET AIR HANDLING UNIT (2 UNITS)
SUPPLY U
FIGURE 3
FIGURE 1: R/
NOTES:
1. PIPING SPECIFICATIONS ARE D
EXCEPT SPECIAL NOTES.
DESIGN PRESSURE
DESIGN TEMPERATURE
SEISMIC CLASSIFICATION
RADIATION LEVEL
QUALITY CLASSIFICATION
MATERIALS
2. THIS AO VALVE CAN CHANGE
3. THIS FS CAN CHANGE TO OUT
4. PX OF INLET/OUTLET OF PUM
5. THE LOAD OF HVHS MAY BE
TO HVAC DESIGN PROGRESS.
6. FIGURES 1 AND 3 ARE TYPICA
AND EQUIPMENT SUPPLY UNITS
7. R/B S/C HVAC SUPPLY UNITS
REFERENCE DOCUMENTS
1. DRYWELL COOLING SYSTEM F
2. HVAC P&ID
3. HOT WATER HEATING SYSTE
4. TURBINE BUILDING COOLING WATER SYSTEM P&ID
5. SAMPLING SYSTEM P&ID
6. PIPING AND INSTRUMENT SYS
7. OFF GAS SYSTEM P&ID

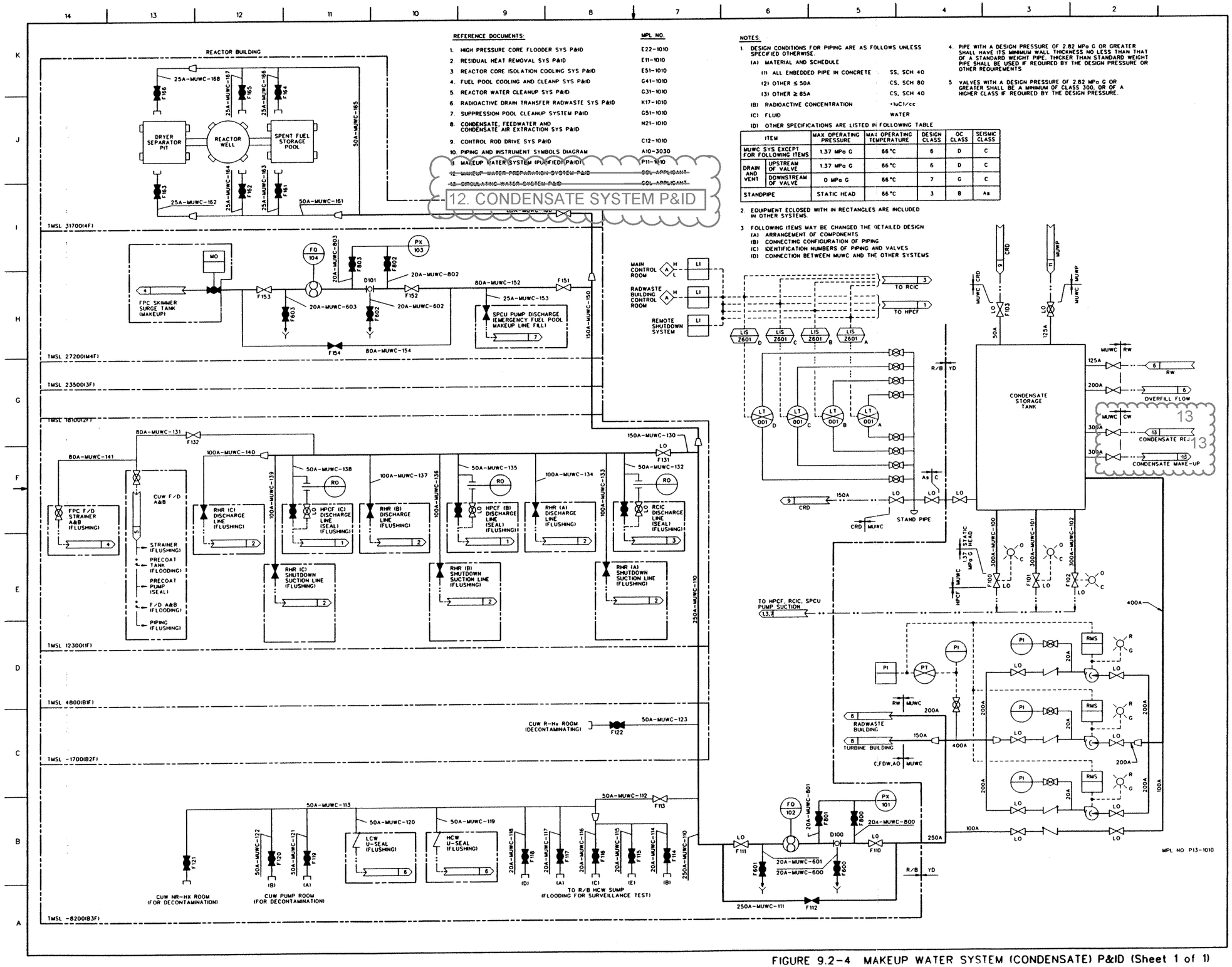

REFERENCE DOCUMENTS:

		MPL NO.
1.	HIGH PRESSURE CORE FLOODER SYS P&ID	E22-1010
2.	RESIDUAL HEAT REMOVAL SYS P&ID	E11-1010
3.	REACTOR CORE ISOLATION COOLING SYS P&ID	E51-1010
4.	FUEL POOL COOLING AND CLEANP SYS P&ID	G41-1010
5.	REACTOR WATER CLEANUP SYS P&ID	G31-1010
6.	RADIOACTIVE DRAIN TRANSFER RADWASTE SYS P&ID	K17-1010
7.	SUPPRESSION POOL CLEANUP SYSTEM P&ID	G51-1010
8.	CONDENSATE, FEEDWATER AND CONDENSATE AIR EXTRACTION SYS P&ID	N21-1010
9.	CONTROL ROD DRIVE SYS P&ID	C12-1010
10.	PIPING AND INSTRUMENT SYMBOLS DIAGRAM	A10-3030
11.	MAKEUP WATER SYSTEM (PURIFIED) P&ID	P11-1010
~~12.~~	~~MAKEUP WATER PREPARATION SYSTEM P&ID~~	~~GOL APPLICANT~~
~~13.~~	~~CIRCULATING WATER SYSTEM P&ID~~	~~GOL APPLICANT~~

NOTES.

1. DESIGN CONDITIONS FOR PIPING ARE AS FOLLOWS UNLESS SPECIFIED OTHERWISE.
   - (A) MATERIAL AND SCHEDULE
     - (1) ALL ENBEDDED PIPE IN CONCRETE — SS, SCH 40
     - (2) OTHER ≤ 50A — CS, SCH 80
     - (3) OTHER ≥ 65A — CS, SCH 40
   - (B) RADIOACTIVE CONCENTRATION — <1uCi/cc
   - (C) FLUID — WATER
   - (D) OTHER SPECIFICATIONS ARE LISTED IN FOLLOWING TABLE

ITEM		MAX OPERATING PRESSURE	MAX OPERATING TEMPERATURE	DESIGN CLASS	QC CLASS	SEISMIC CLASS
MUWC SYS EXCEPT FOR FOLLOWING ITEMS		1.37 MPa G	66 °C	6	D	C
DRAIN AND VENT	UPSTREAM OF VALVE	1.37 MPa G	66 °C	6	D	C
	DOWNSTREAM OF VALVE	0 MPa G	66 °C	7	G	C
STANDPIPE		STATIC HEAD	66 °C	3	B	As

2. EQUIPMENT ECLOSED WITH IN RECTANGLES ARE INCLUDED IN OTHER SYSTEMS.
3. FOLLOWING ITEMS MAY BE CHANGED THE DETAILED DESIGN
   - (A) ARRANGEMENT OF COMPONENTS
   - (B) CONNECTING CONFIGURATION OF PIPING
   - (C) IDENTIFICATION NUMBERS OF PIPING AND VALVES
   - (D) CONNECTION BETWEEN MUWC AND THE OTHER SYSTEMS
4. PIPE WITH A DESIGN PRESSURE OF 2.82 MPa G OR GREATER SHALL HAVE ITS MINIMUM WALL THICKNESS NO LESS THAN THAT OF A STANDARD WEIGHT PIPE. THICKER THAN STANDARD WEIGHT PIPE SHALL BE USED IF REQUIRED BY THE DESIGN PRESSURE OR OTHER REQUIREMENTS
5. VALVES WITH A DESIGN PRESSURE OF 2.82 MPa G OR GREATER SHALL BE A MINIMUM OF CLASS 300, OR OF A HIGHER CLASS IF REQUIRED BY THE DESIGN PRESSURE.

FIGURE 9.2-4 MAKEUP WATER SYSTEM (CONDENSATE) P&ID (Sheet 1 of 1)

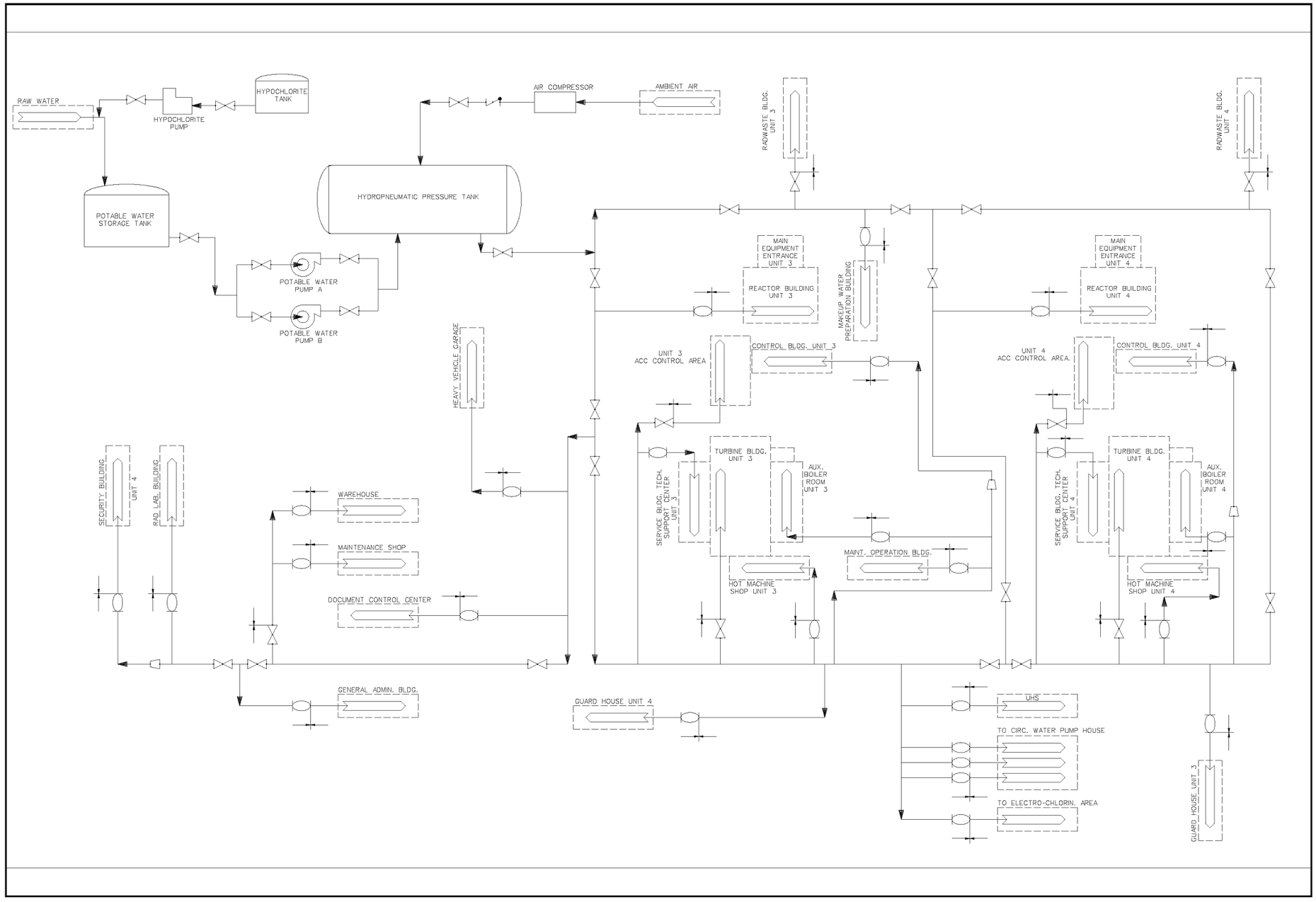

FIGURE 9.2-9b POTABLE WATER SYSTEM P&ID

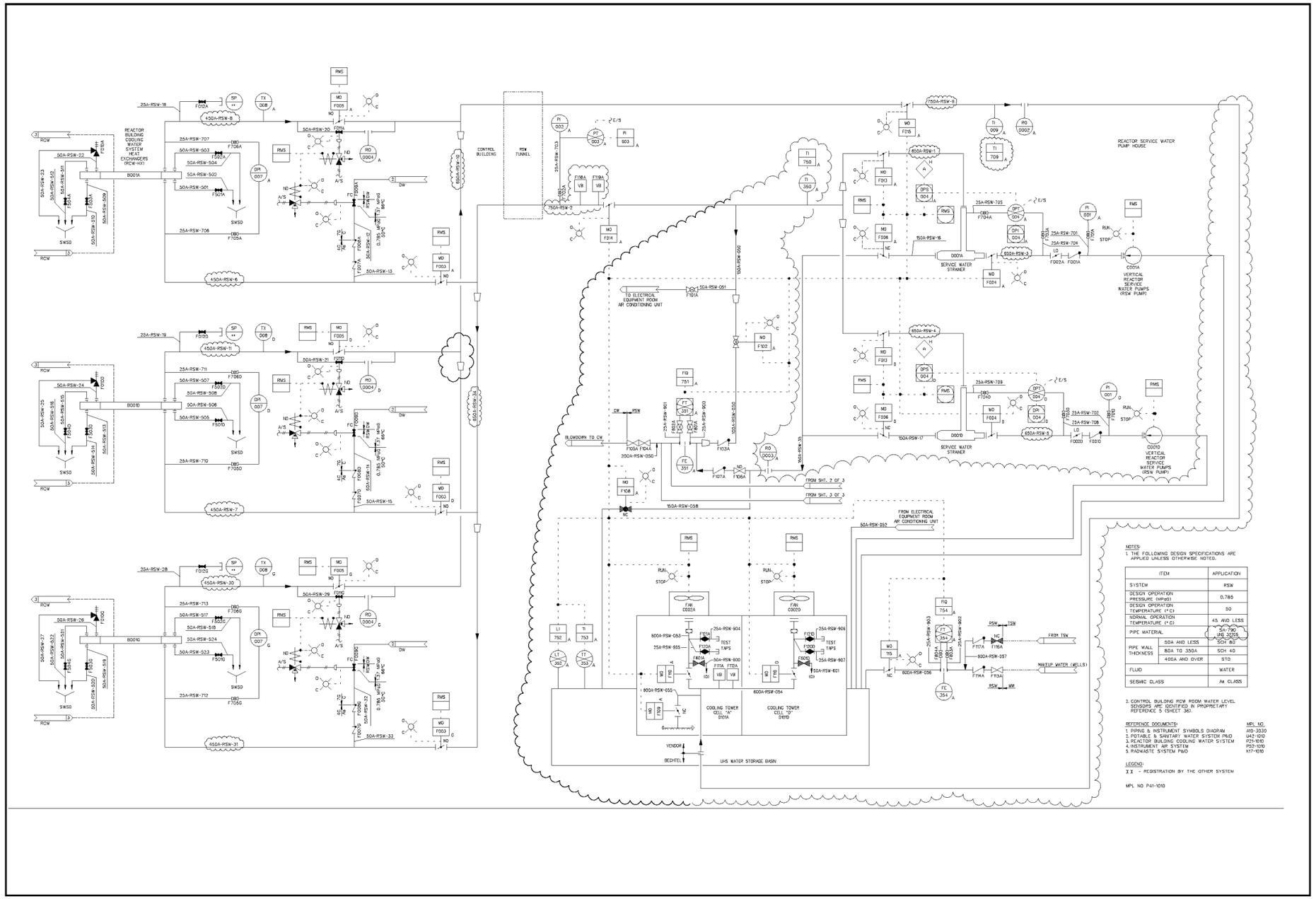

ITEM		APPLICATION
SYSTEM		RSW
DESIGN OPERATION PRESSURE (MPaG)		0.785
DESIGN OPERATION TEMPERATURE (° C)		50
NORMAL OPERATION TEMPERATURE (° C)		45 AND LESS
PIPE MATERIAL		SA-790 UNS S32205
PIPE WALL THICKNESS	50A AND LESS	SCH 80
	80A TO 350A	SCH 40
	400A AND OVER	STD
FLUID		WATER
SEISMIC CLASS		As CLASS

FIGURE 9.2-7 REACTOR SERVICE WATER SYSTEM P&ID (SHEET 1 0F 3)

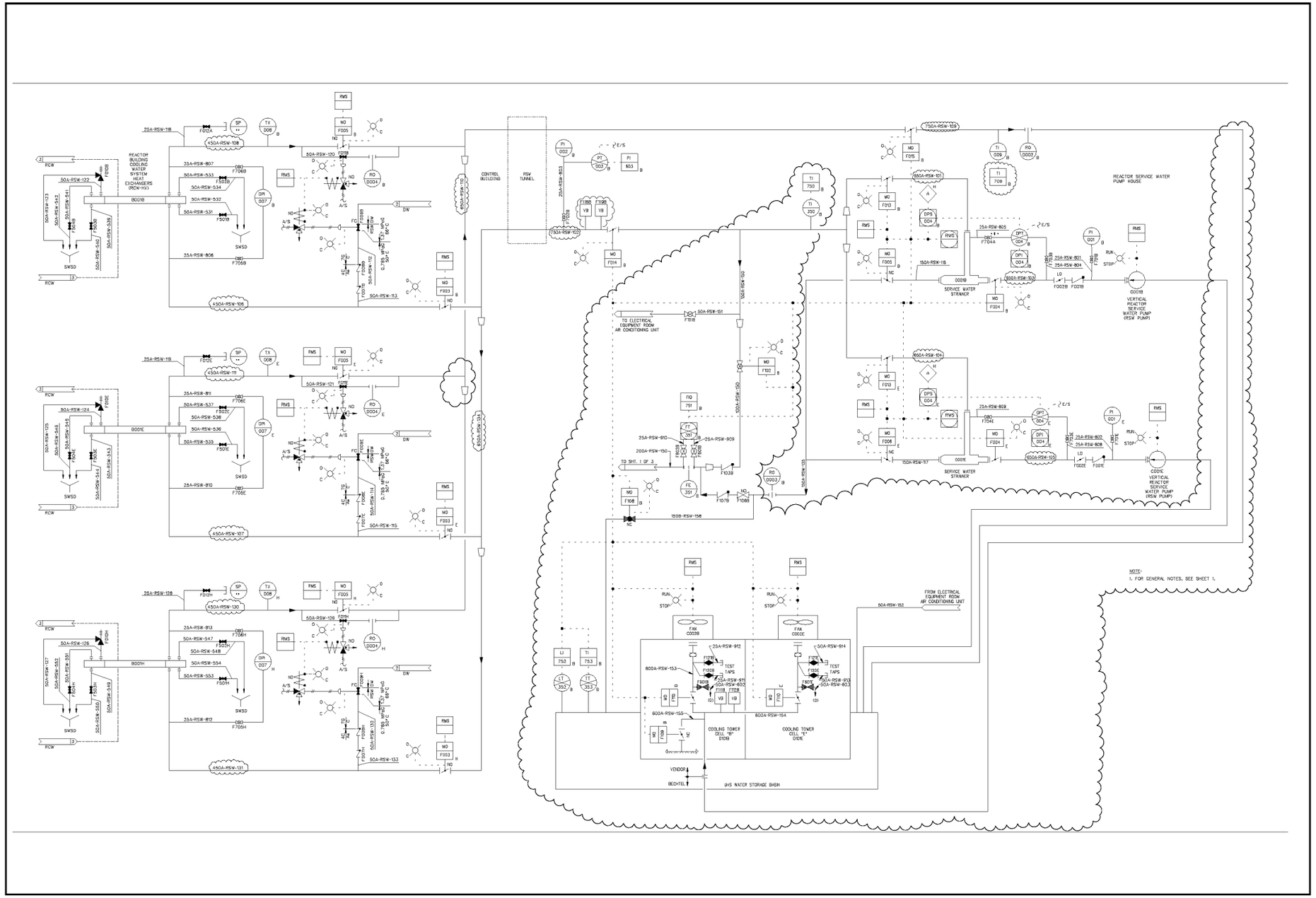

FIGURE 9.2-7 REACTOR SERVICE WATER SYSTEM P&ID (SHEET 2 0F 3)

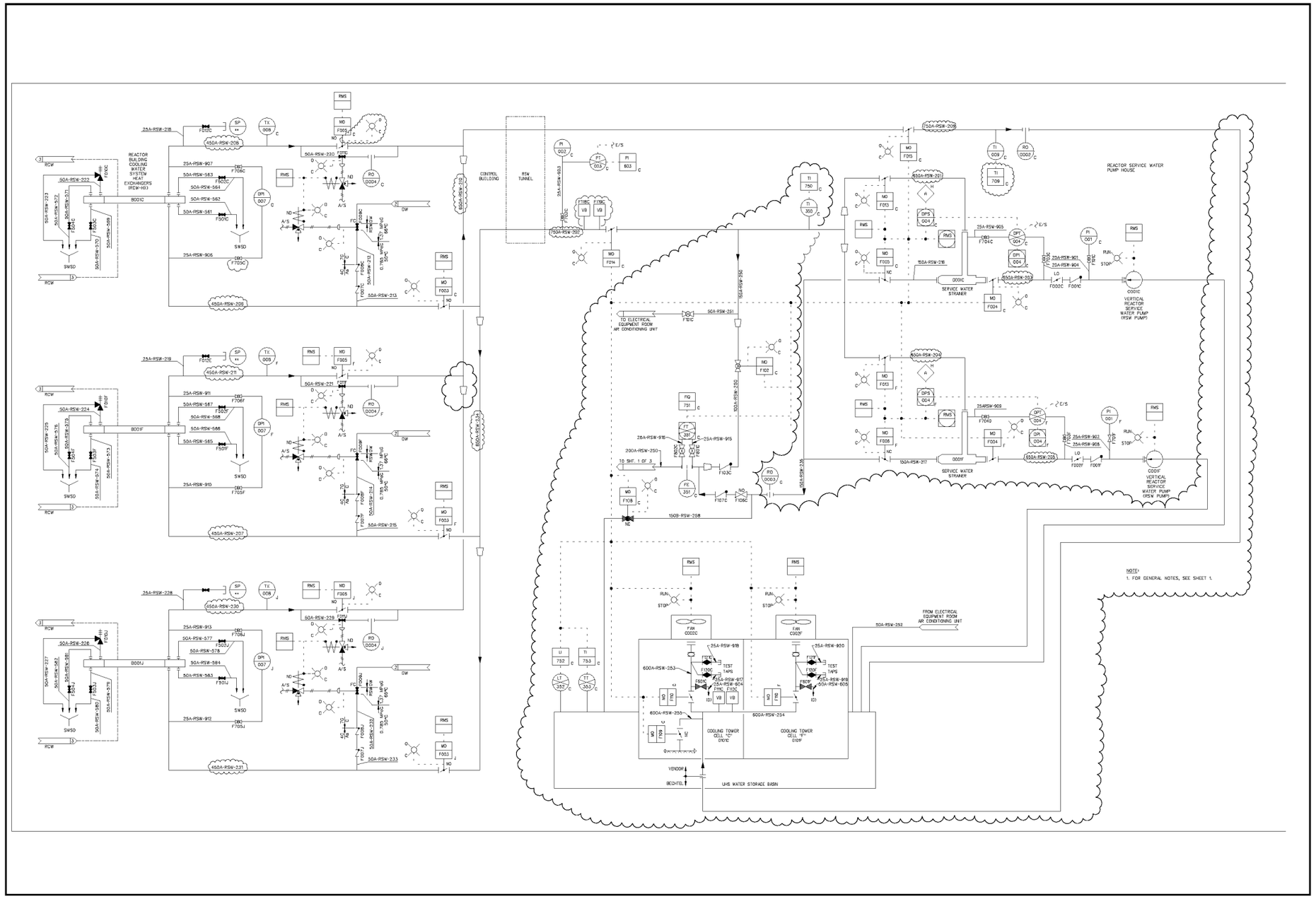

FIGURE 9.2-7 REACTOR SERVICE WATER SYSTEM P&ID (SHEET 3 0F 3)

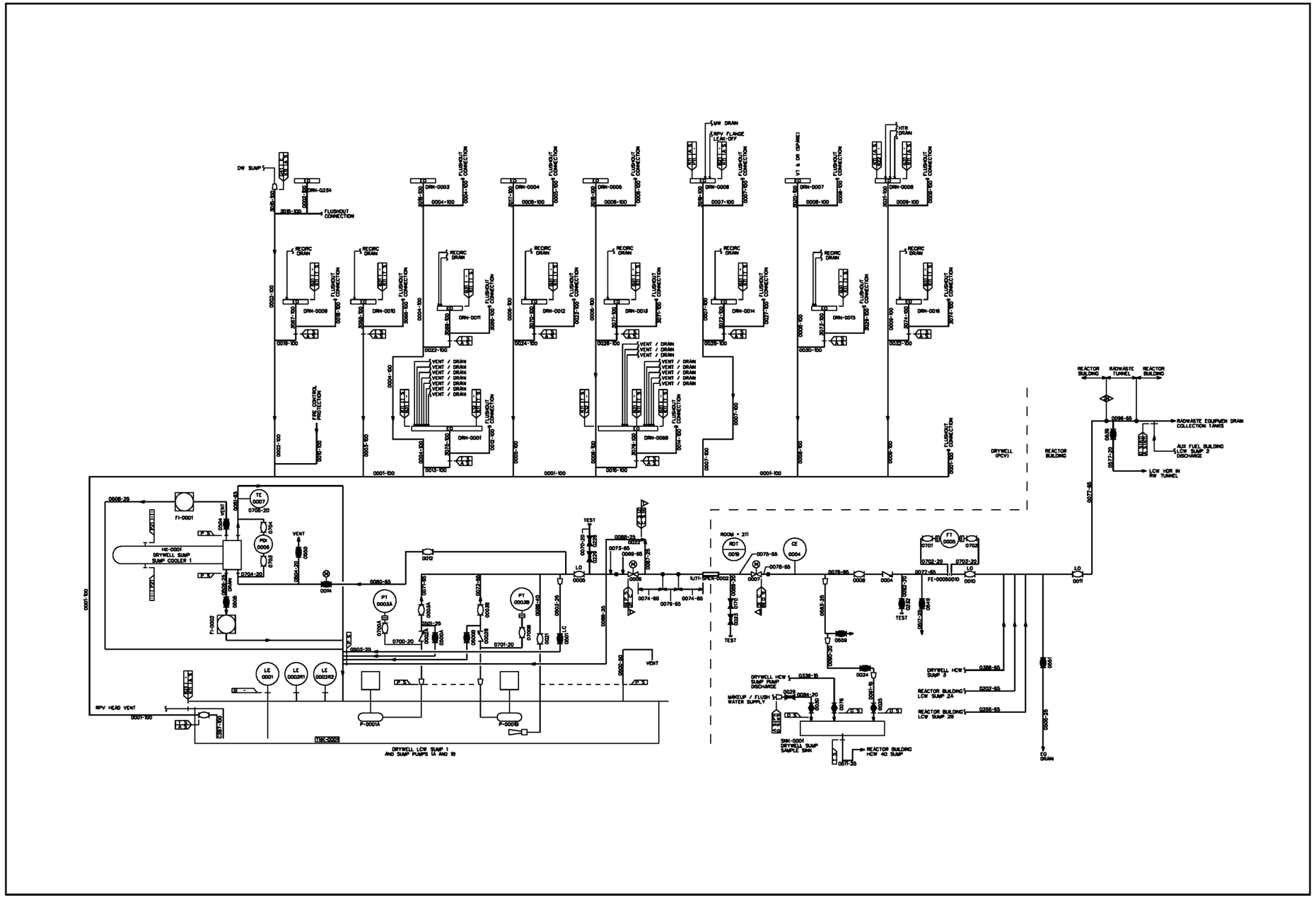

FIGURE 9.3-11 PIPING AND INSTRUMENTATION DIAGRAM, RADIOACTIVE DRAIN TRANSFER (SHEET 1 0F 22)

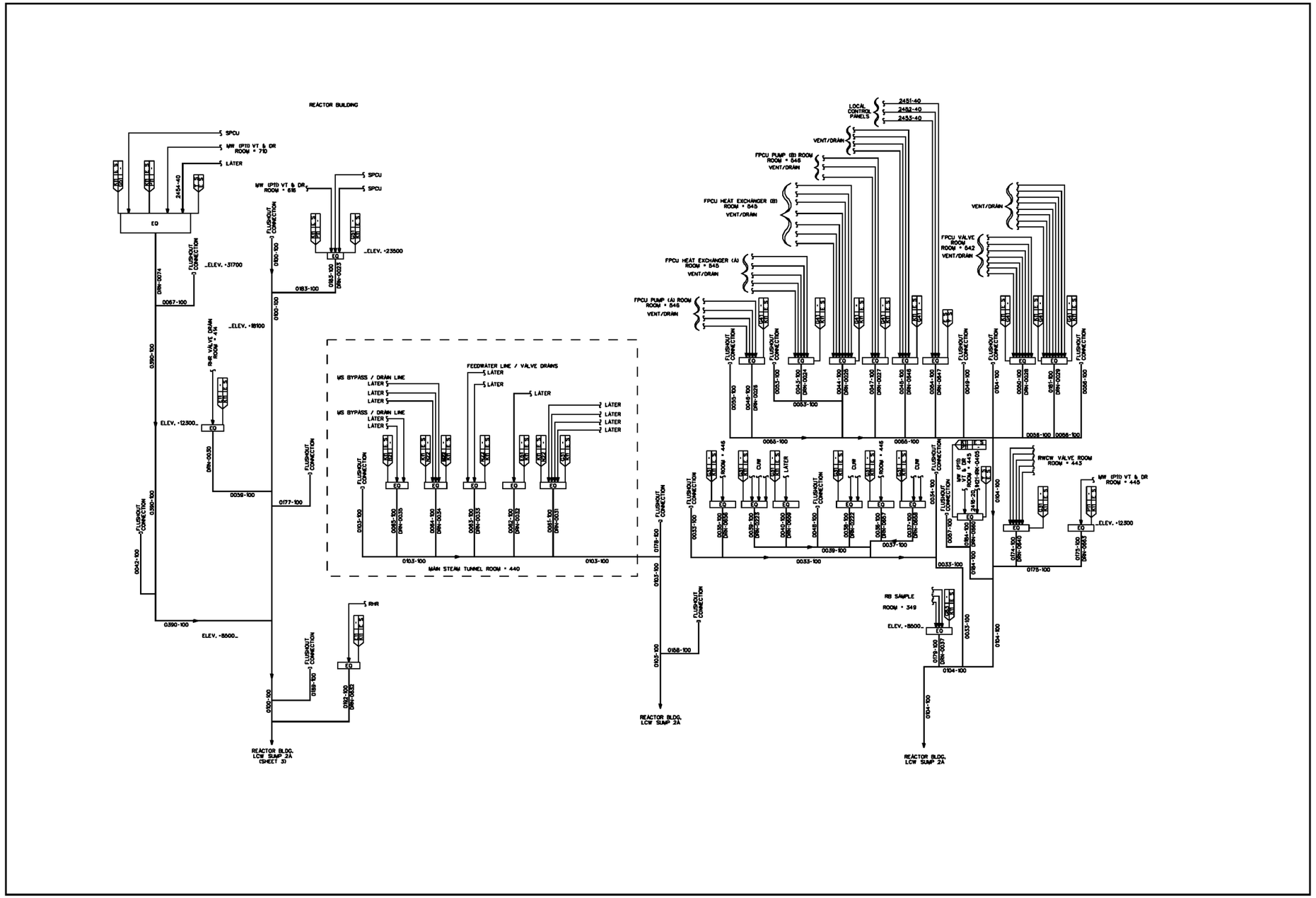

FIGURE 9.3-11 PIPING AND INSTRUMENTATION DIAGRAM, RADIOACTIVE DRAIN TRANSFER (SHEET 2 0F 22)

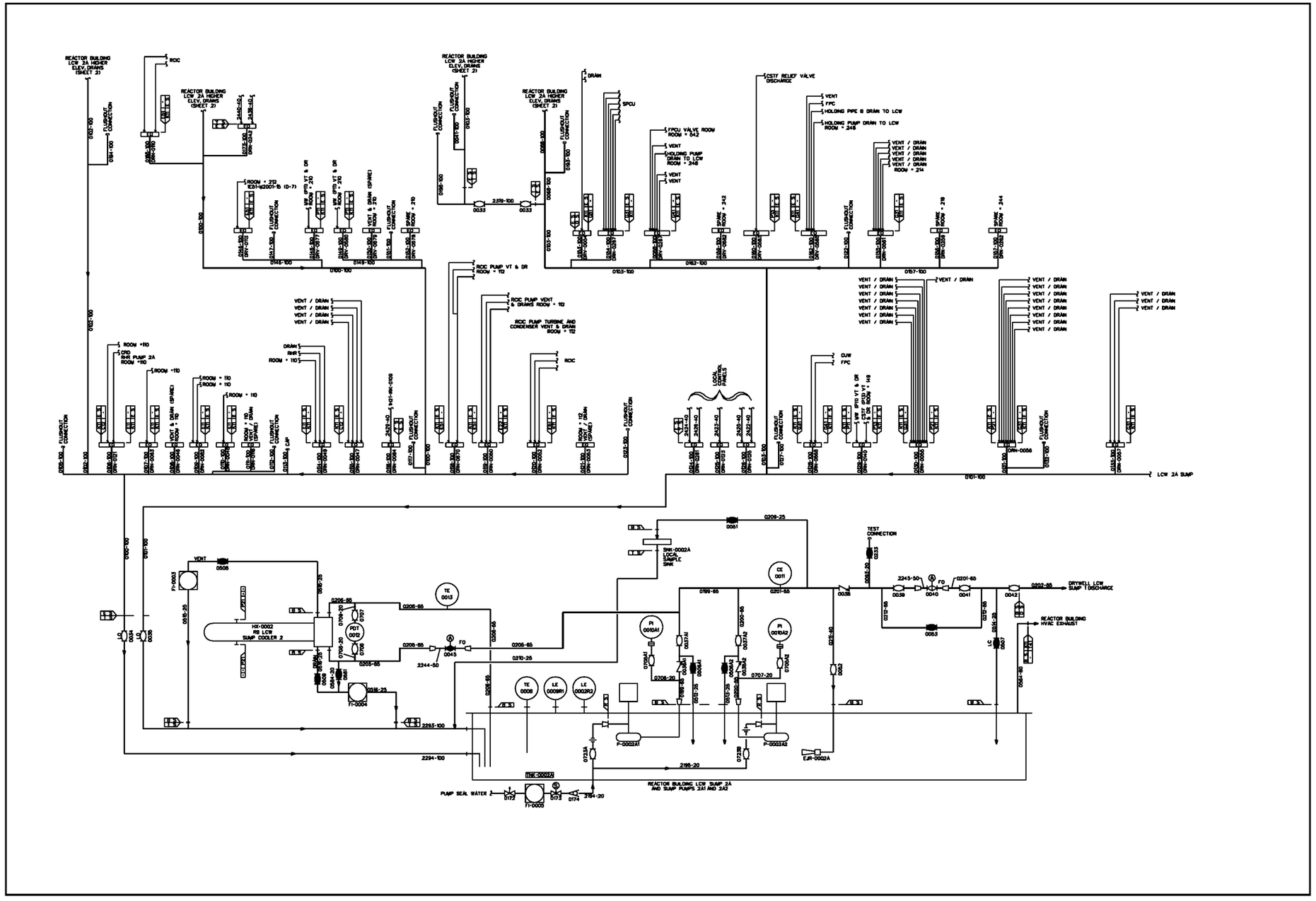

FIGURE 9.3-11 PIPING AND INSTRUMENTATION DIAGRAM, RADIOACTIVE DRAIN TRANSFER (SHEET 3 0F 22)

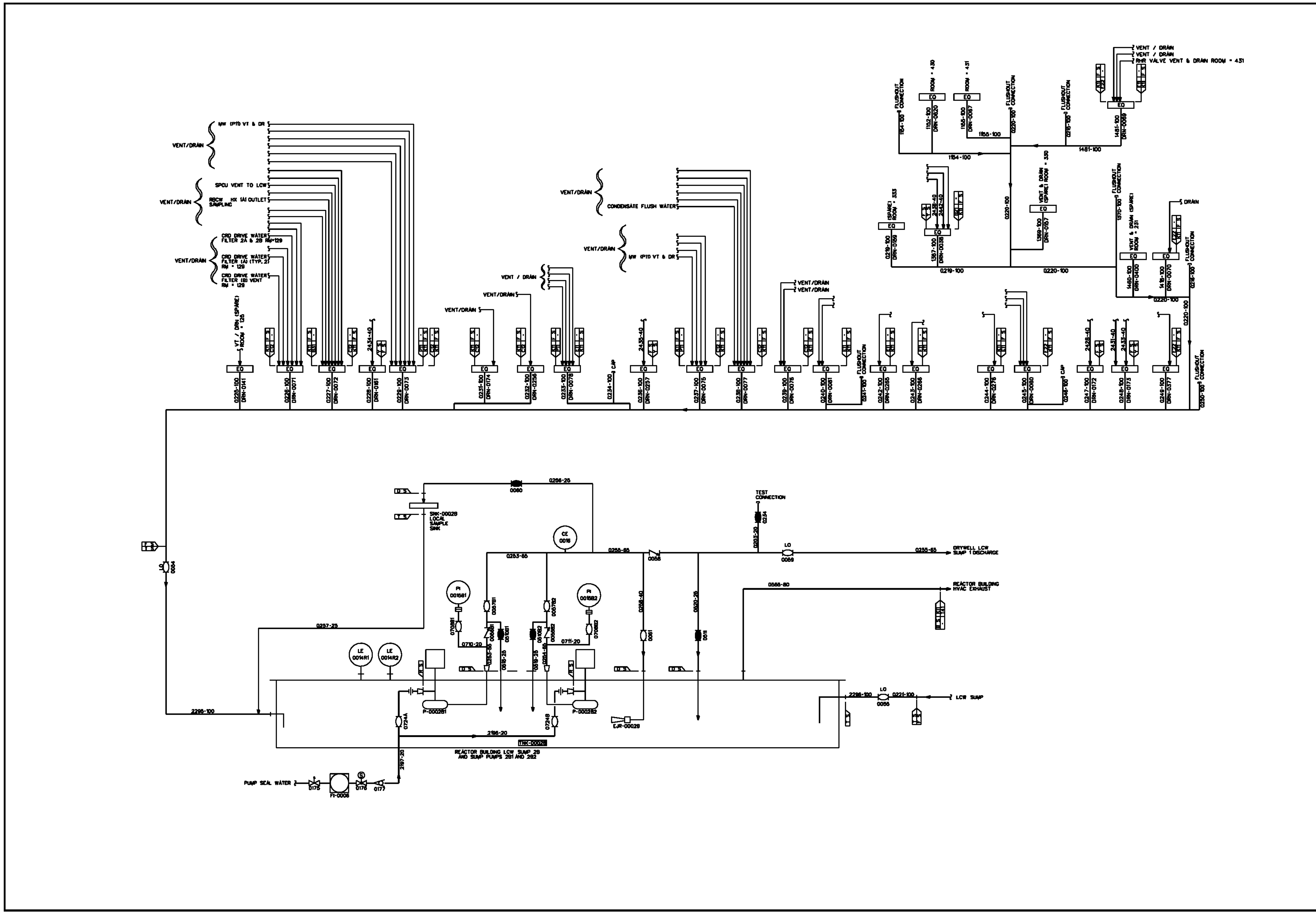

FIGURE 9.3-11 PIPING AND INSTRUMENTATION DIAGRAM, RADIOACTIVE DRAIN TRANSFER
(SHEET 4 0F 22)

STP 3 & 4

Rev. 0

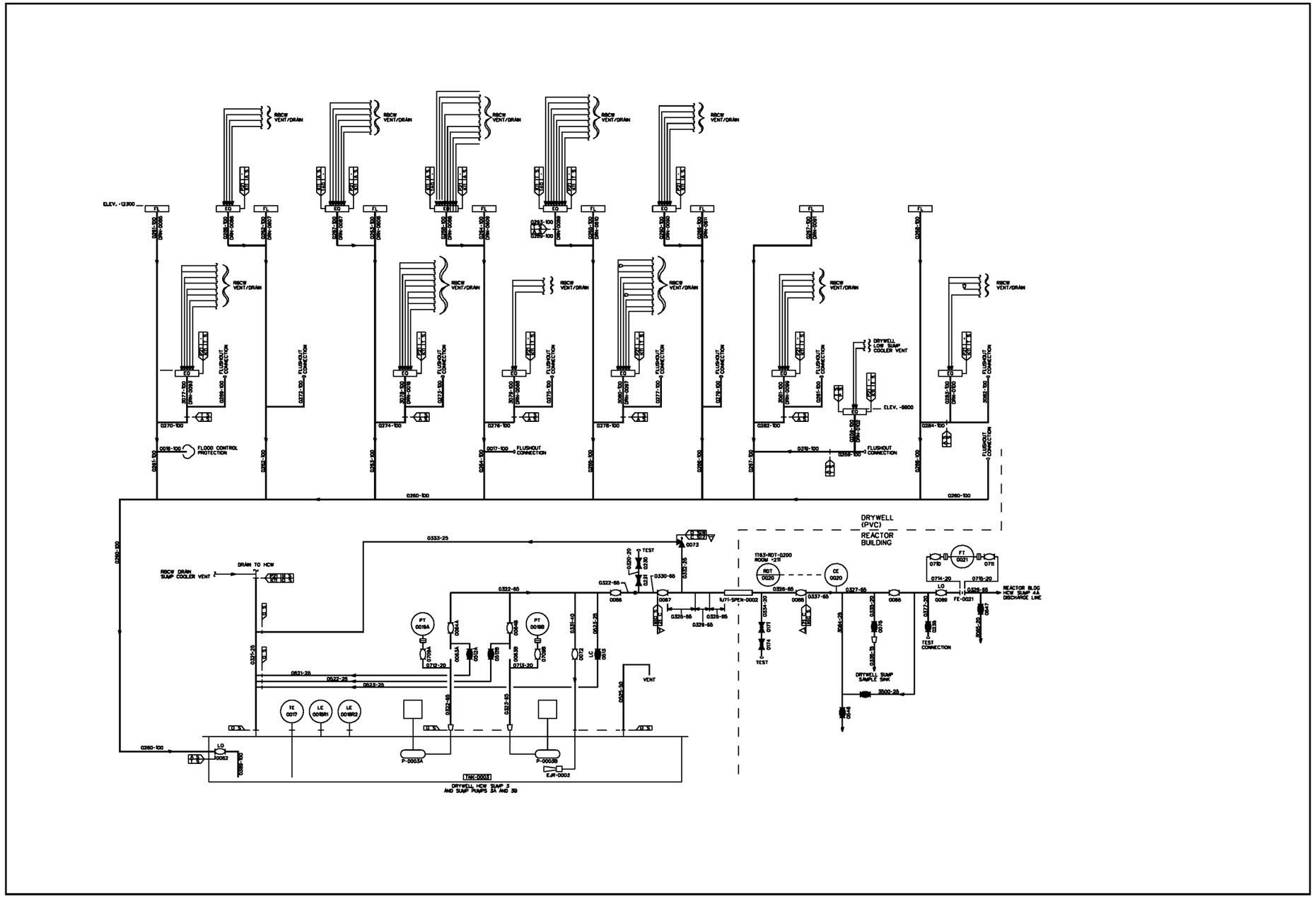

FIGURE 9.3-11 PIPING AND INSTRUMENTATION DIAGRAM, RADIOACTIVE DRAIN TRANSFER (SHEET 5 0F 22)

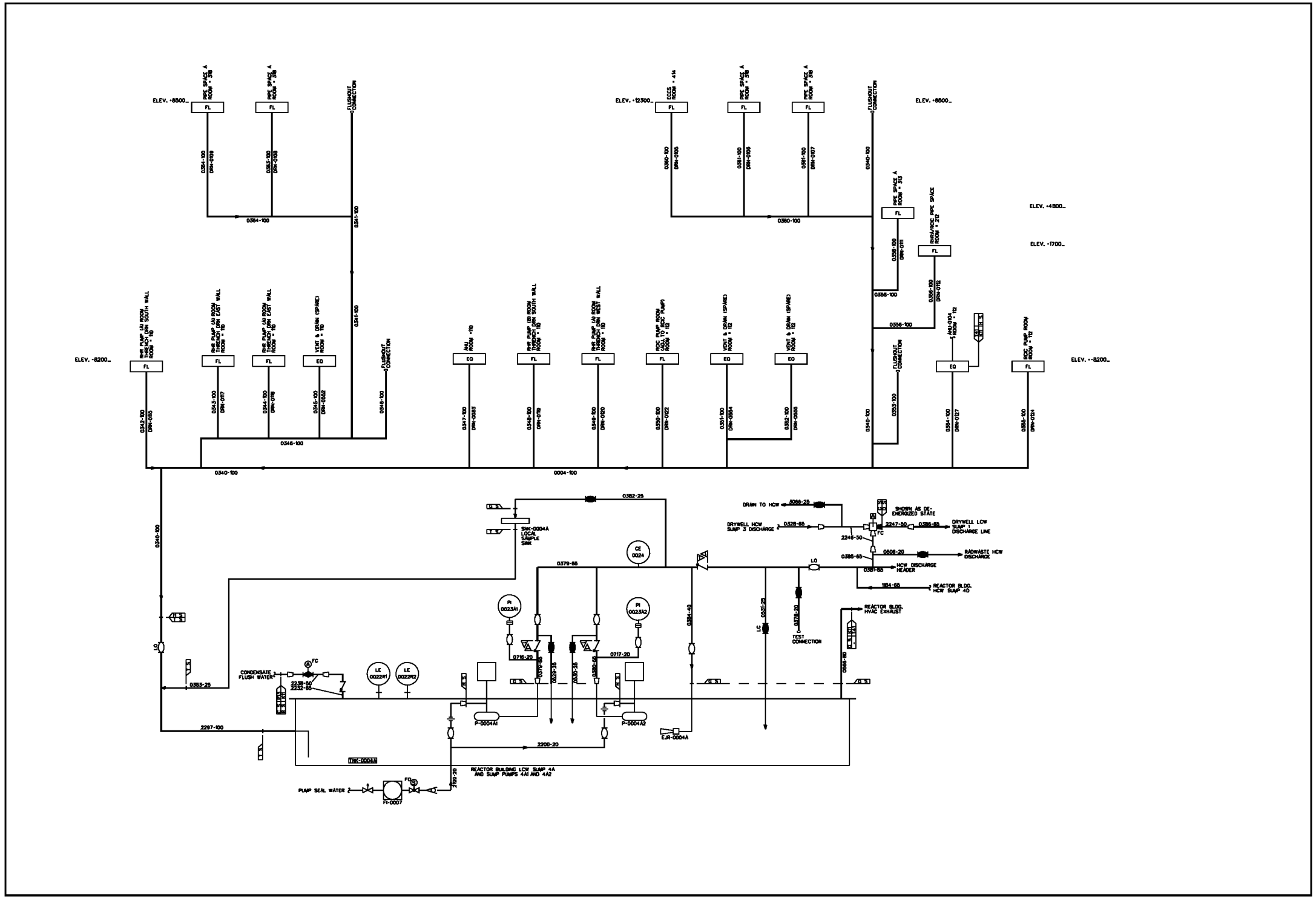
ELEV. -8500
ELEV. -12300
ELEV. -8600
ELEV. -4800
ELEV. -1700
ELEV. -8200
ELEV. +-8200
FLUSHOUT CONNECTION
0340-100
0004-100
0341-100
0346-100
0347-100
0348-100
0349-100
0350-100
0351-100
0352-100
0353-100
0354-100
0355-100
0356-100
0357-100
0358-100
0359-100
0360-100
0361-100
0362-100
0363-100
0364-100
0365-100
0366-100
0367-100
0368-100
0369-100
0370-100
0371-100
0372-100
0373-100
0374-100
0375-100
0376-100
0377-100
0378-100
0379-100
0380-100
0381-100
0382-100
0383-100
0384-100
0385-100

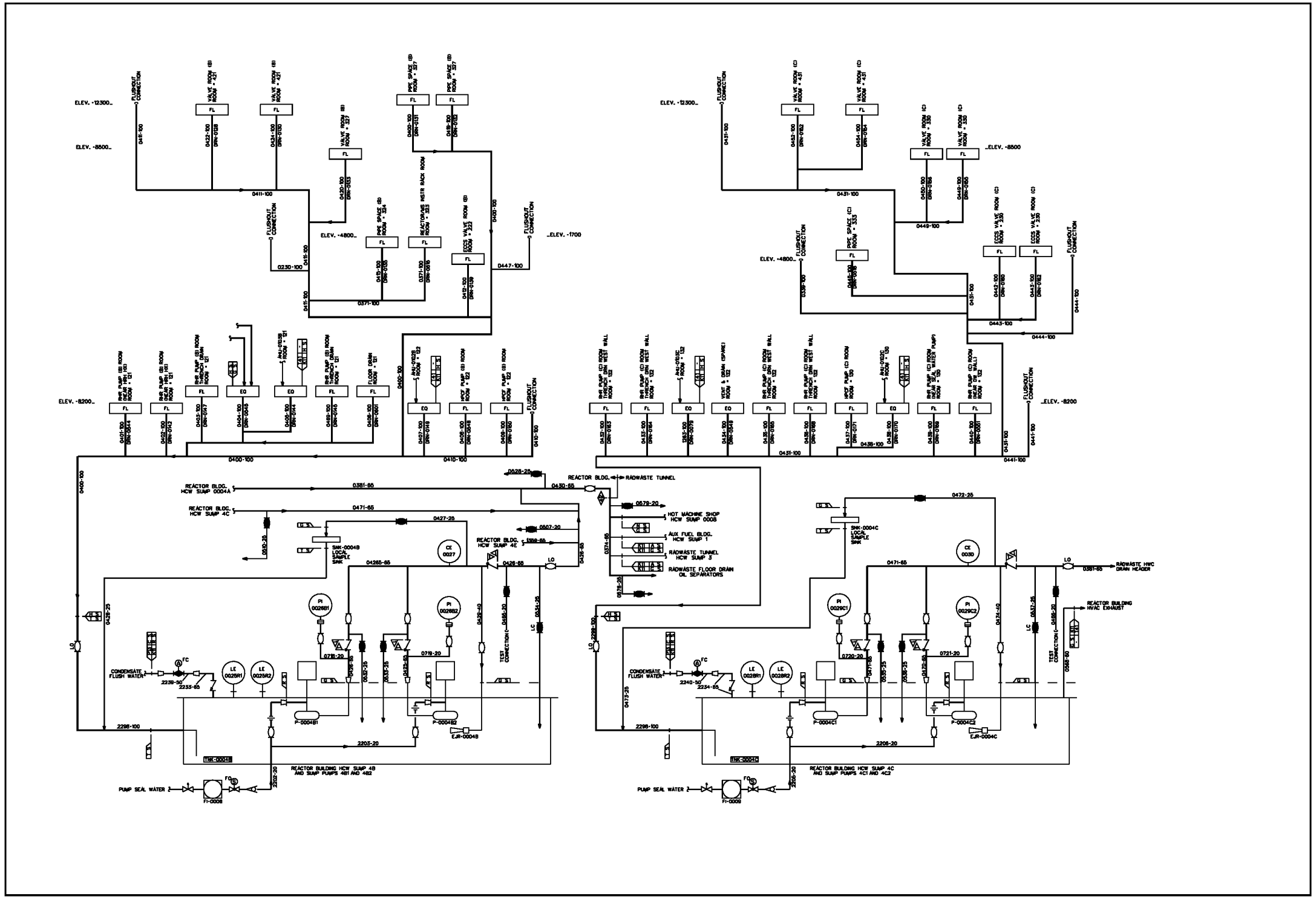

FIGURE 9.3-11 PIPING AND INSTRUMENTATION DIAGRAM, RADIOACTIVE DRAIN TRANSFER (SHEET 7 0F 22)

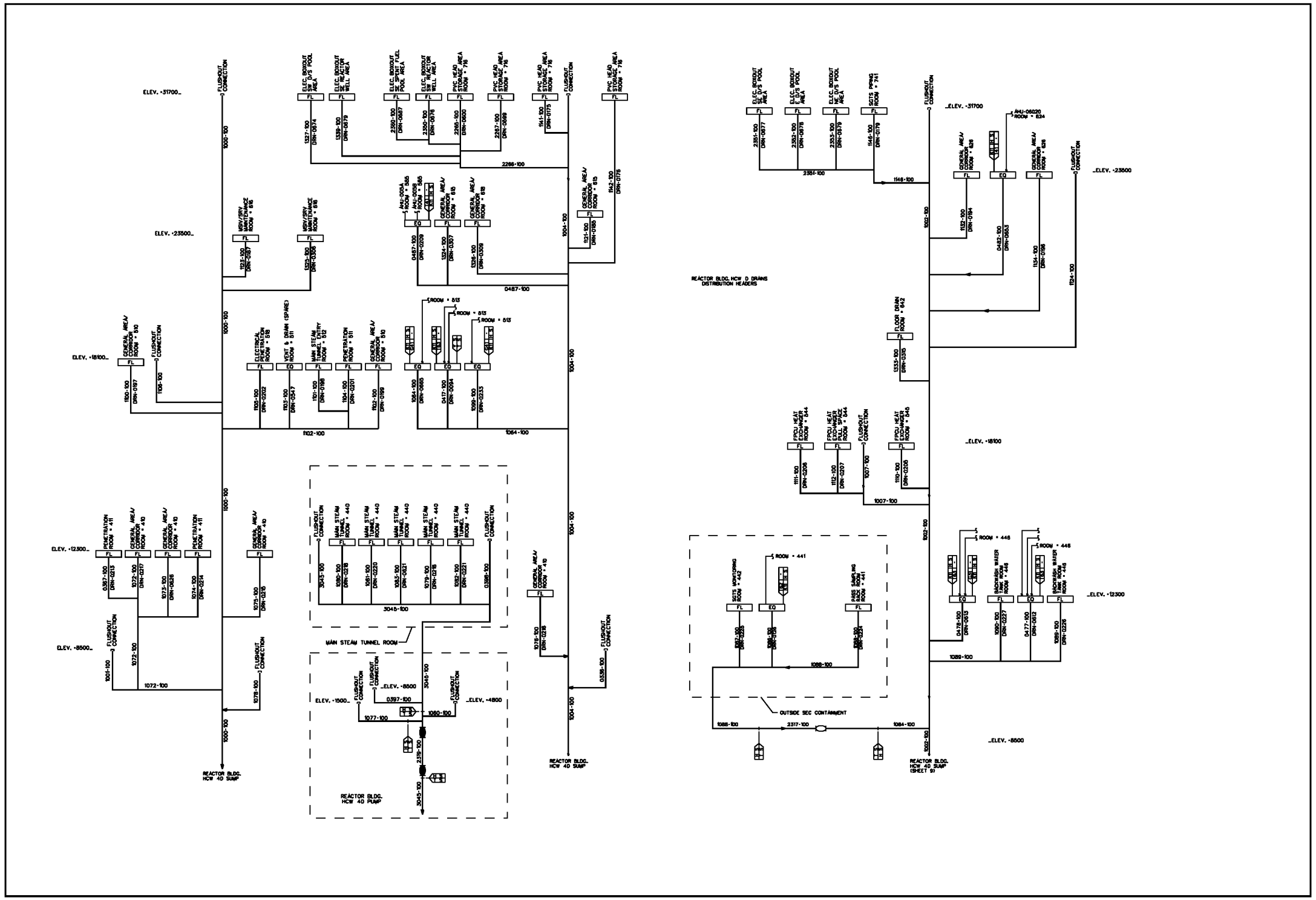

FIGURE 9.3-11 PIPING AND INSTRUMENTATION DIAGRAM, RADIOACTIVE DRAIN TRANSFER (SHEET 8 0F 22)

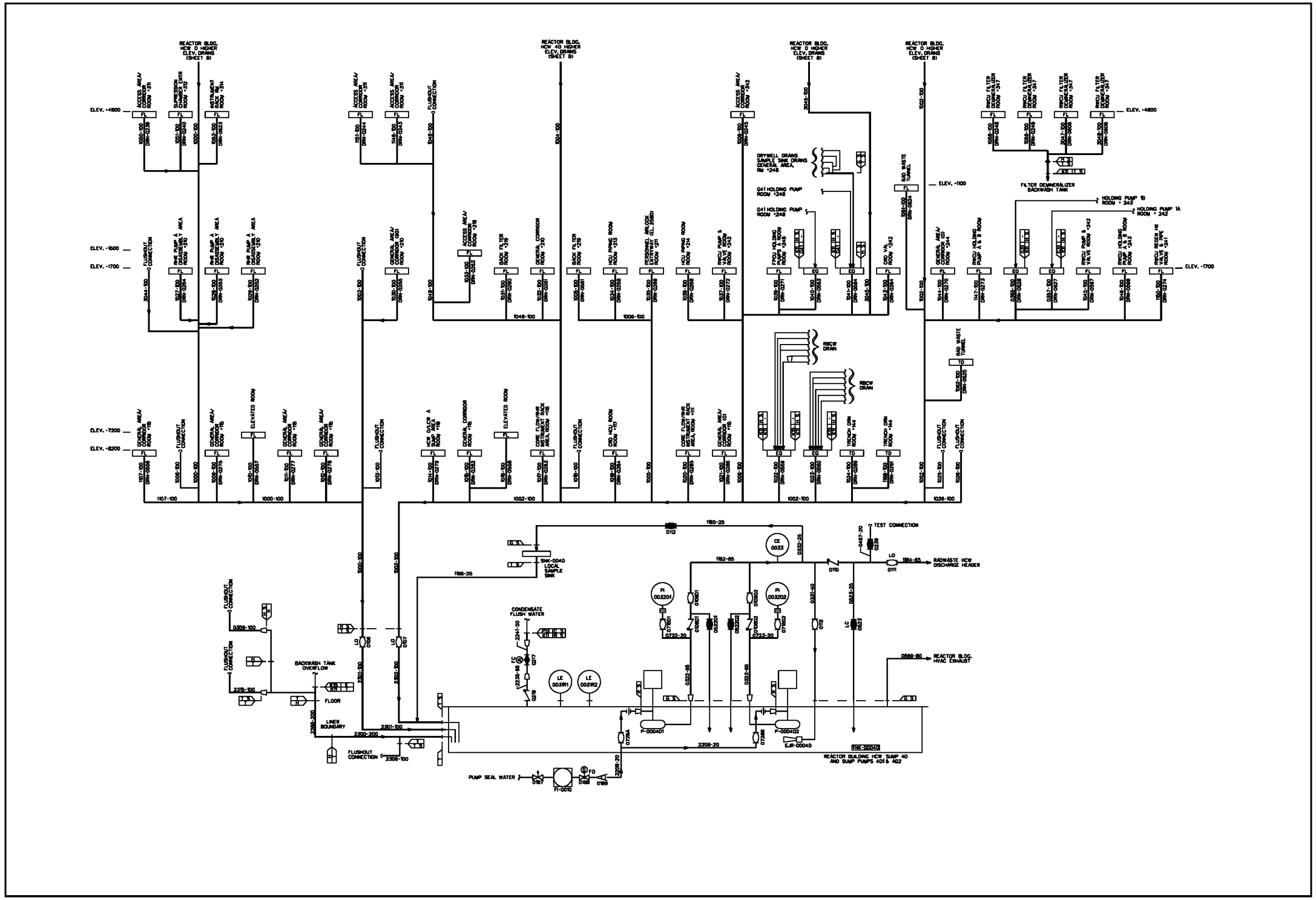

FIGURE 9.3-11 PIPING AND INSTRUMENTATION DIAGRAM, RADIOACTIVE DRAIN TRANSFER (SHEET 9 0F 22)

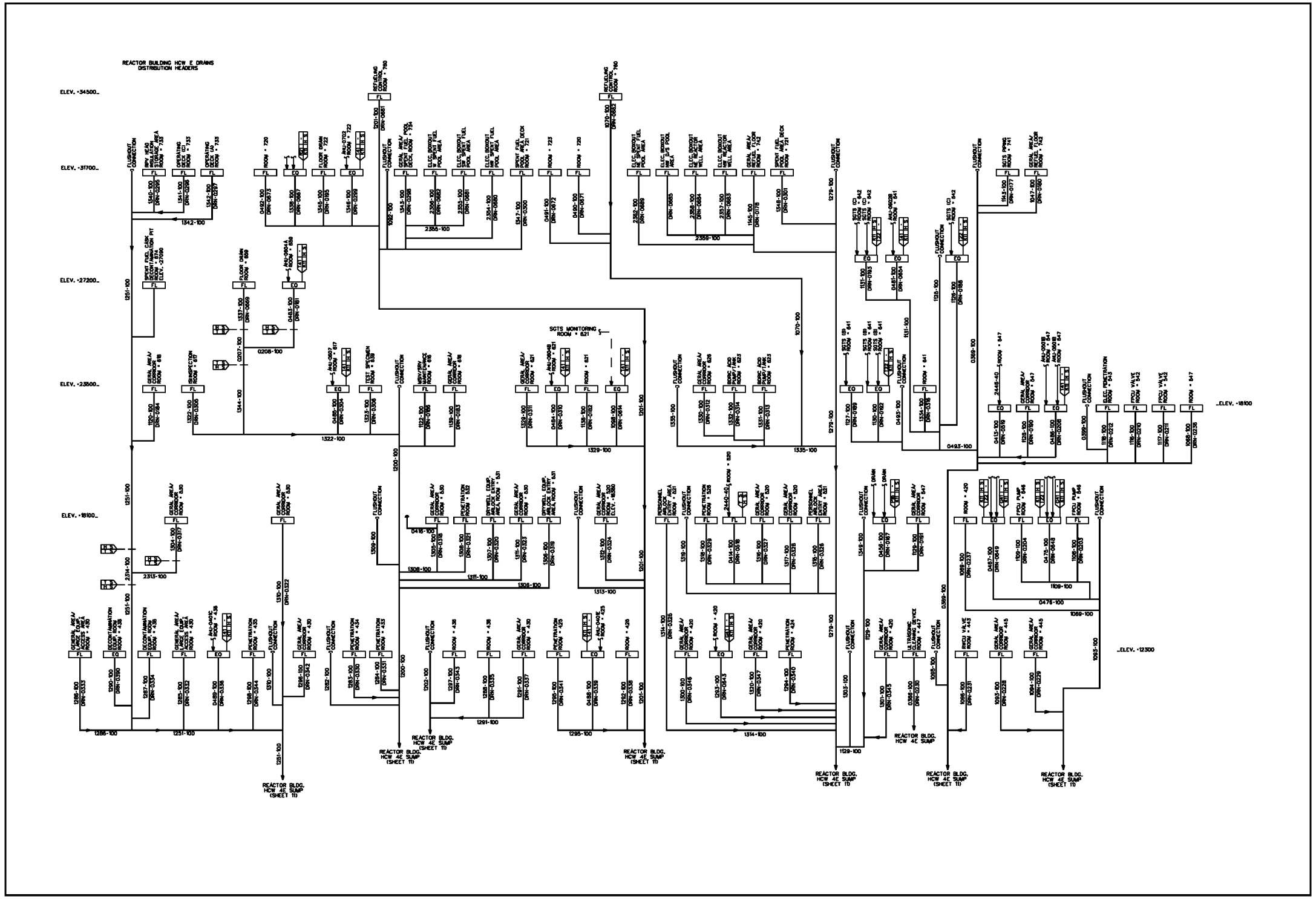

FIGURE 9.3-11 PIPING AND INSTRUMENTATION DIAGRAM, RADIOACTIVE DRAIN TRANSFER (SHEET 10 0F 22)

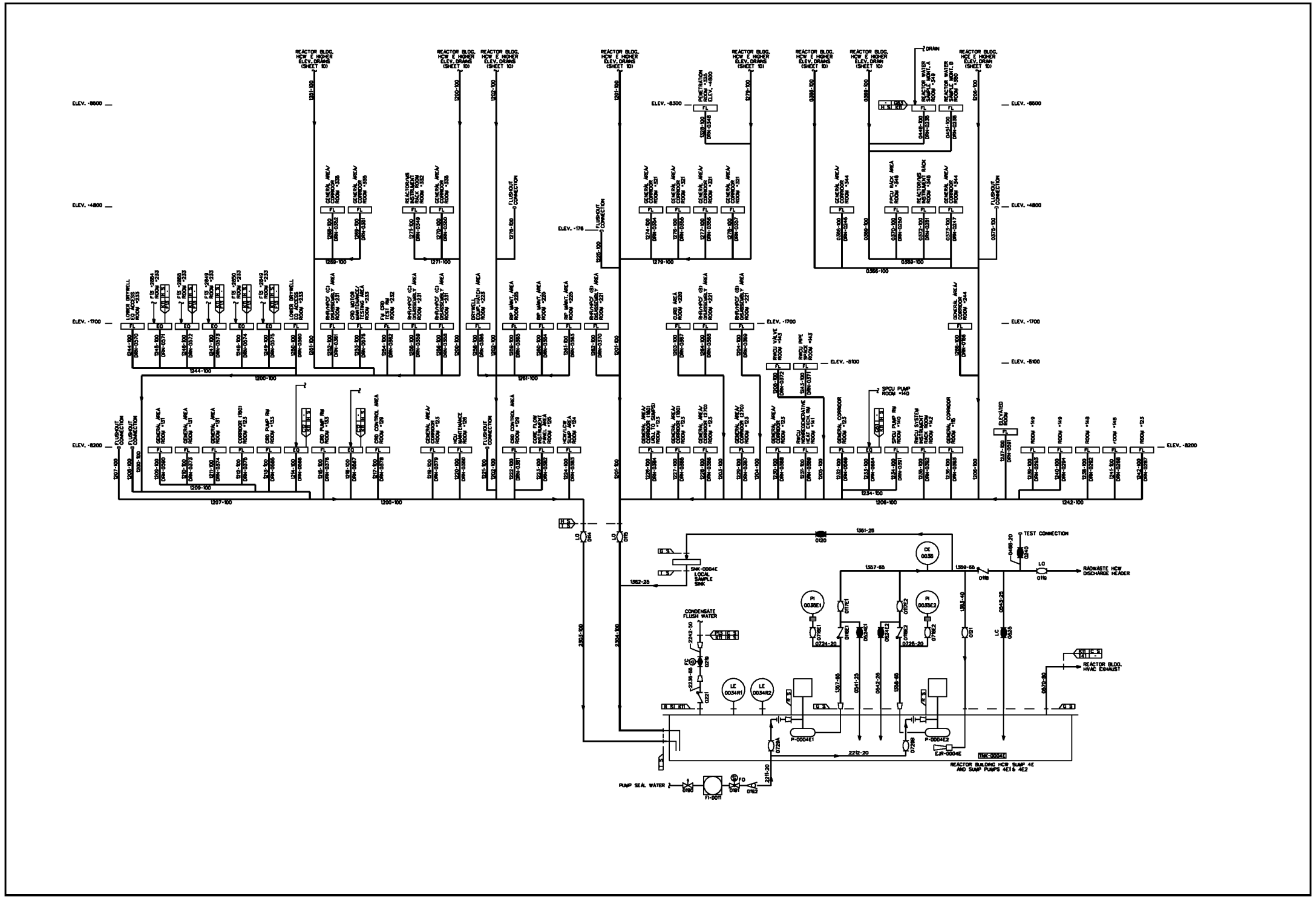

FIGURE 9.3-11 PIPING AND INSTRUMENTATION DIAGRAM, RADIOACTIVE DRAIN TRANSFER (SHEET 11 0F 22)

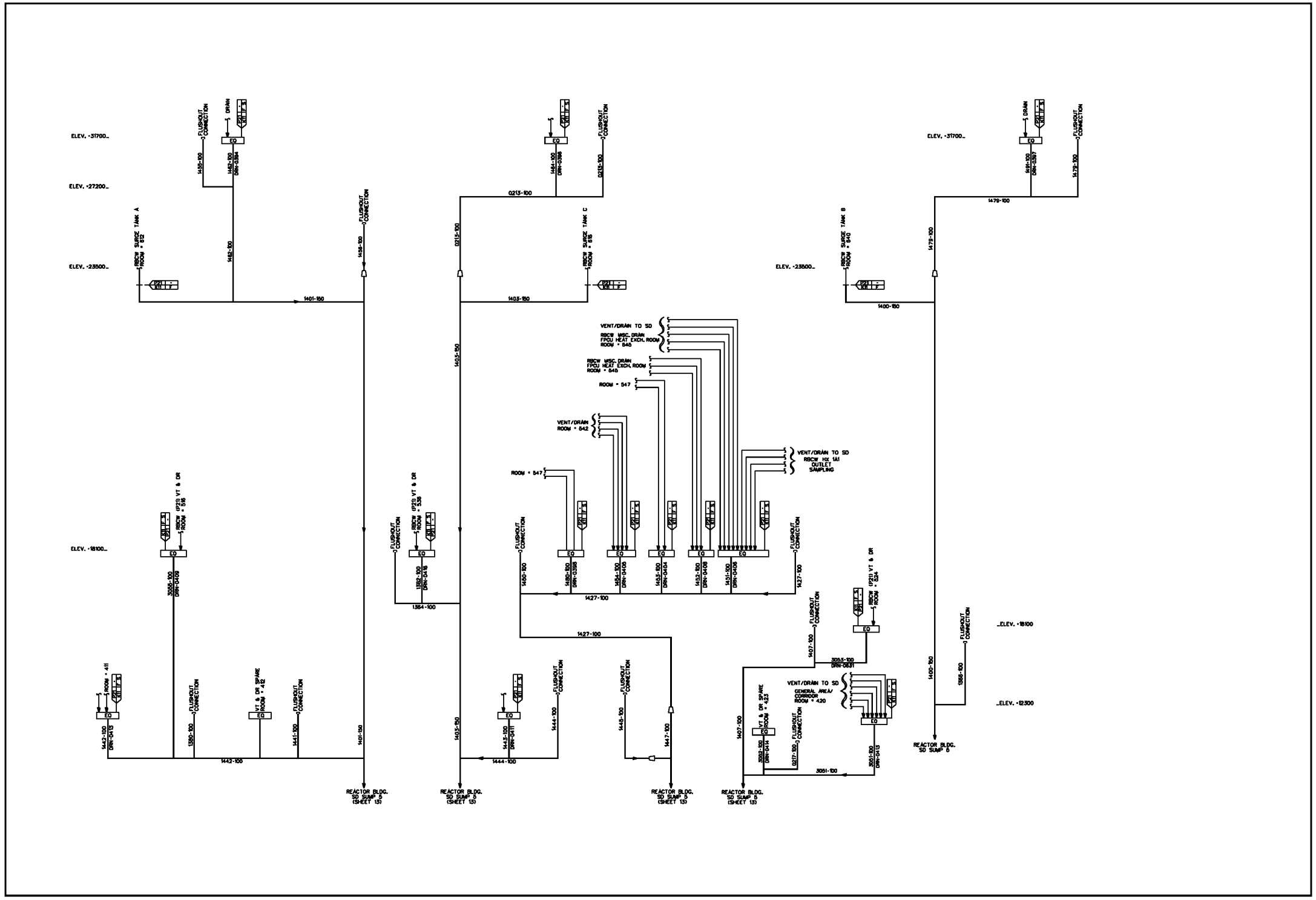

FIGURE 9.3-11 PIPING AND INSTRUMENTATION DIAGRAM, RADIOACTIVE DRAIN TRANSFER (SHEET 12 0F 22)

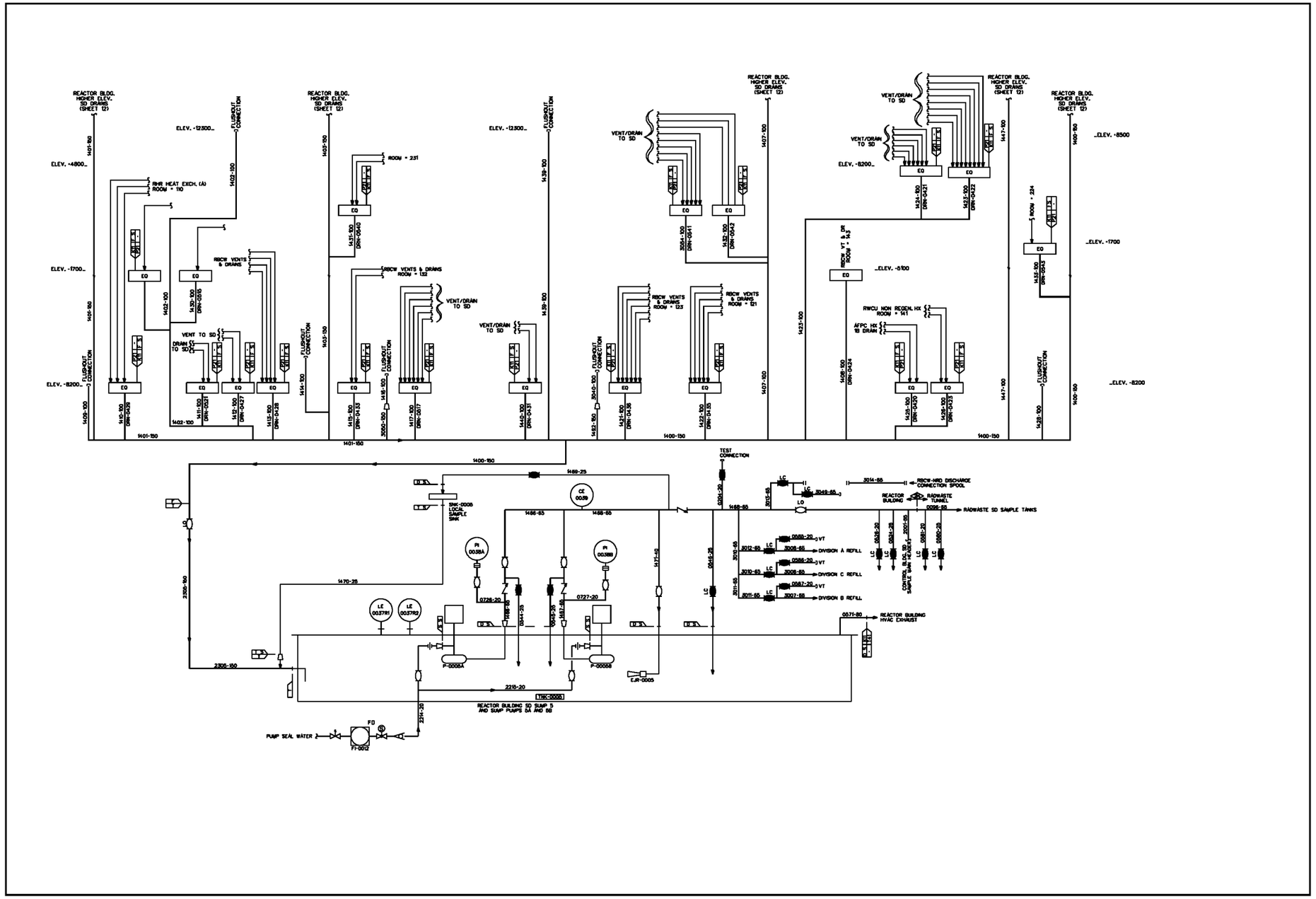

FIGURE 9.3-11 PIPING AND INSTRUMENTATION DIAGRAM, RADIOACTIVE DRAIN TRANSFER (SHEET 13 0F 22)

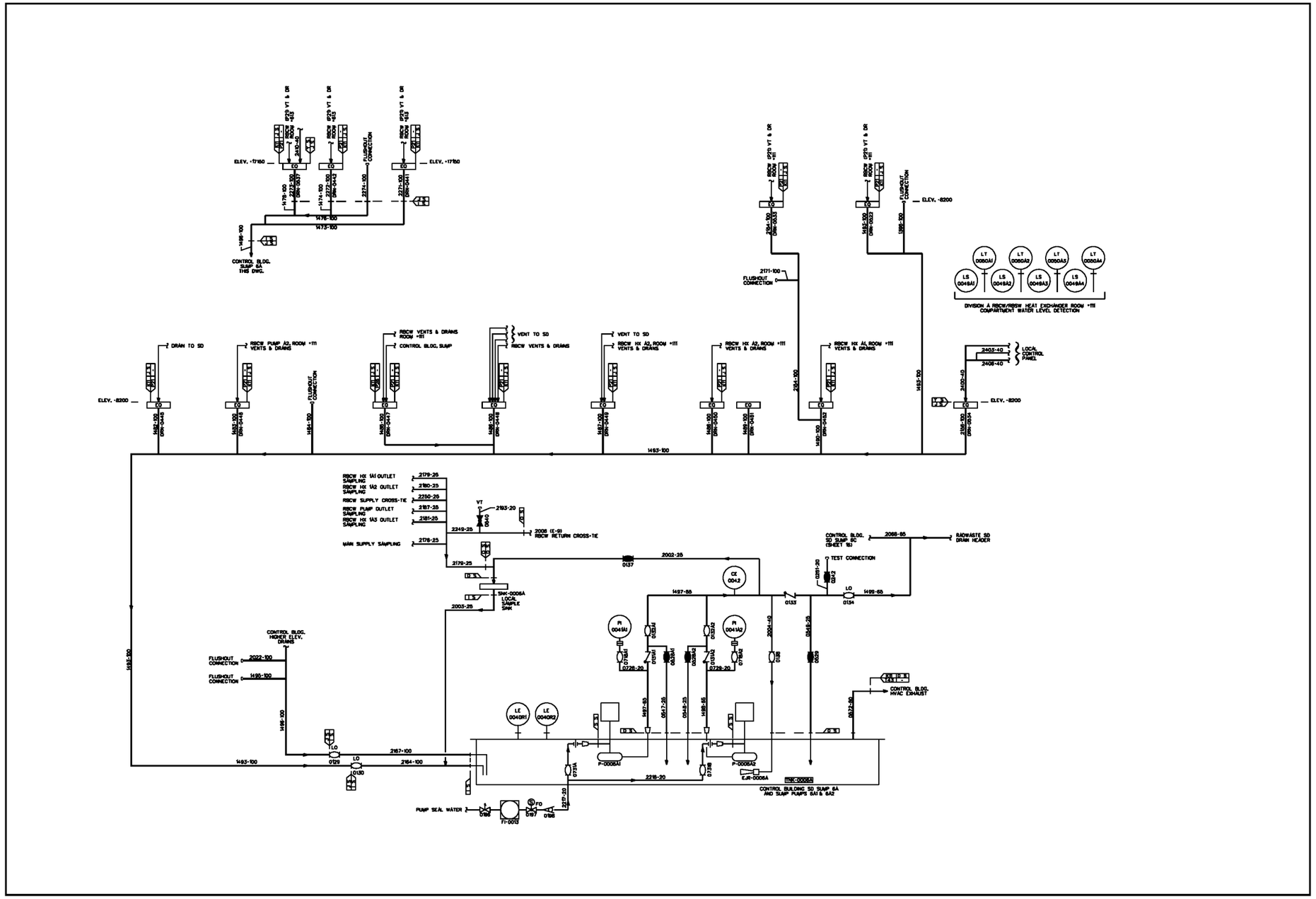

FIGURE 9.3-11 PIPING AND INSTRUMENTATION DIAGRAM, RADIOACTIVE DRAIN TRANSFER (SHEET 14 0F 22)

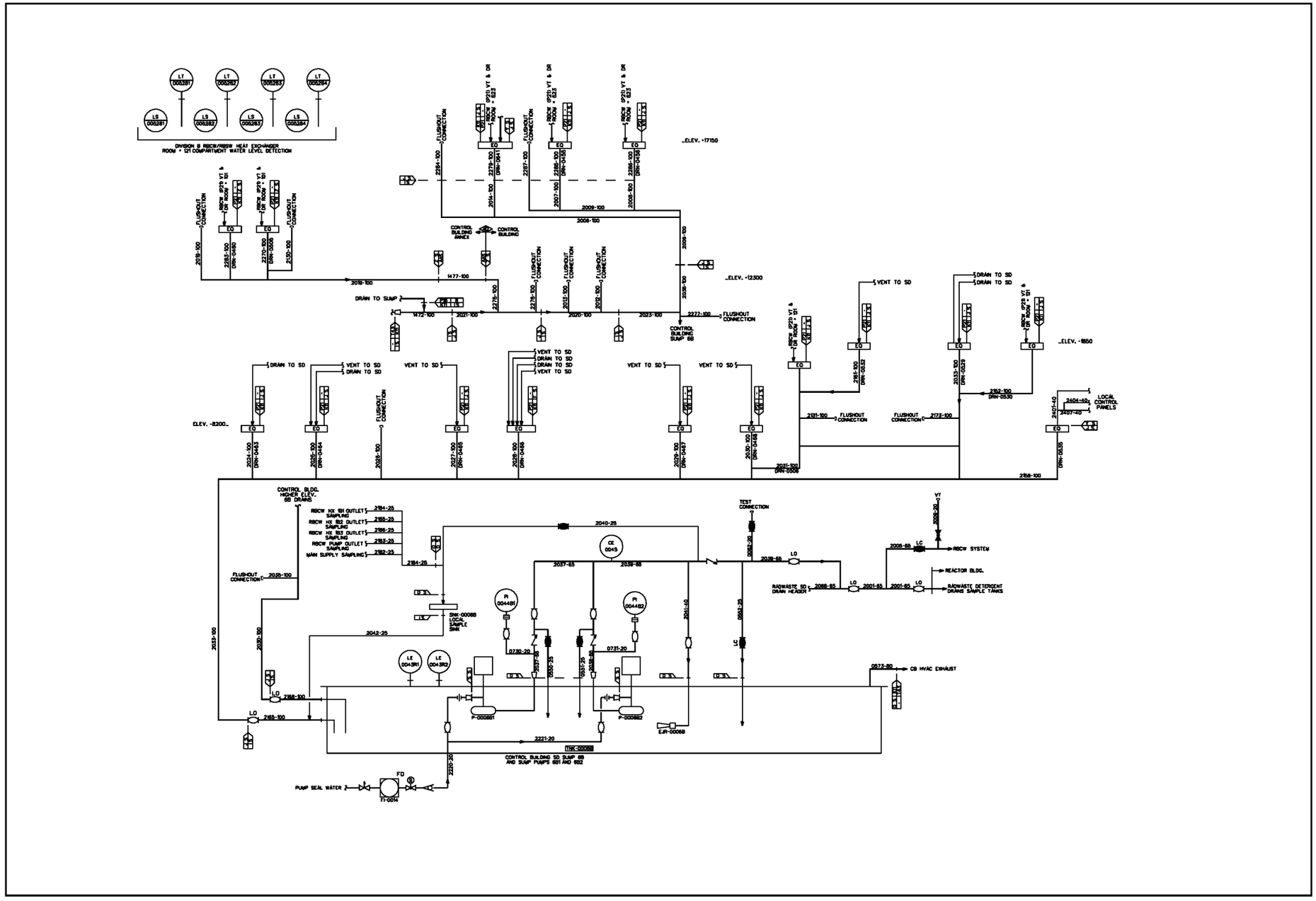

FIGURE 9.3-11 PIPING AND INSTRUMENTATION DIAGRAM, RADIOACTIVE DRAIN TRANSFER (SHEET 15 0F 22)

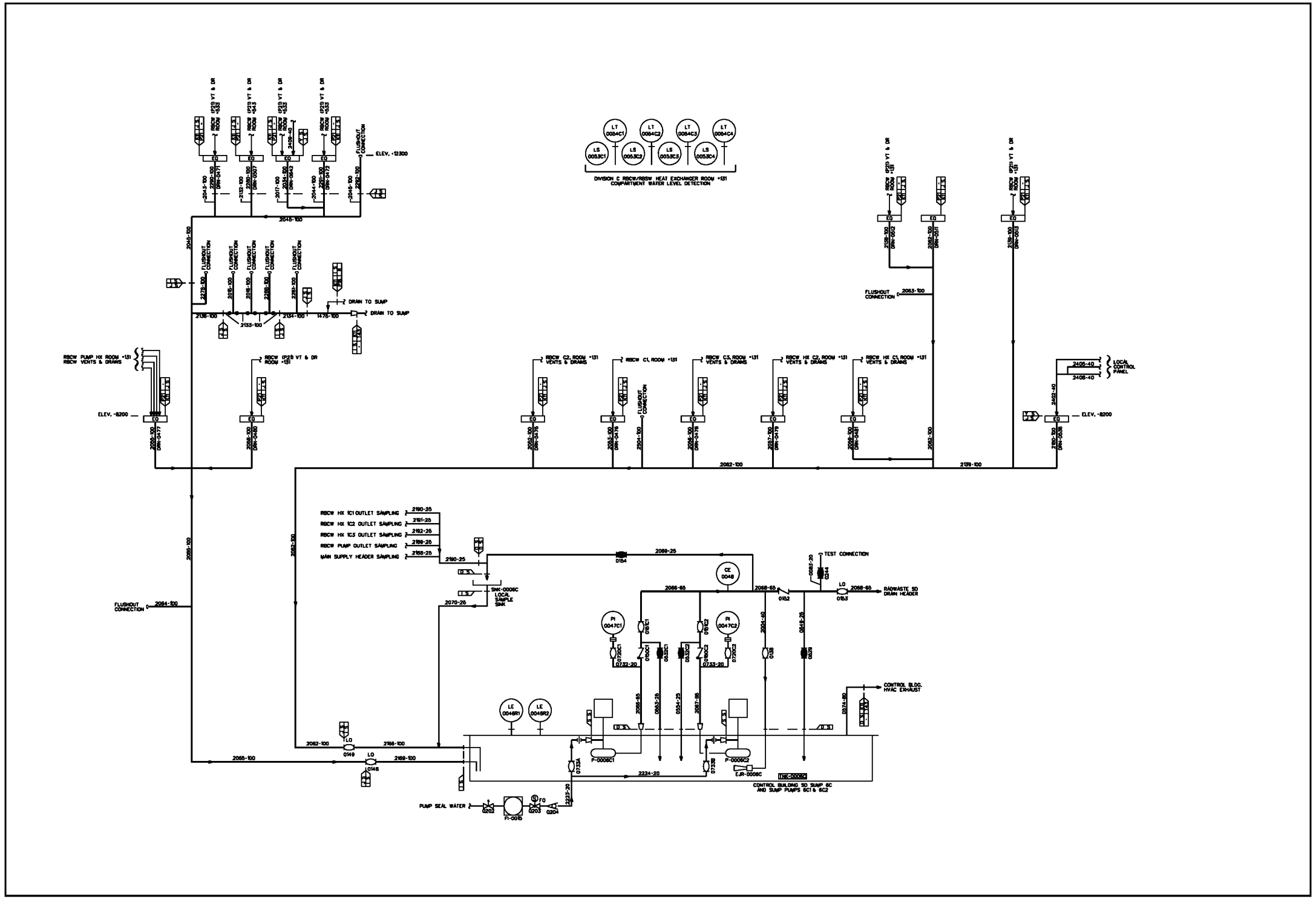

FIGURE 9.3-11 PIPING AND INSTRUMENTATION DIAGRAM, RADIOACTIVE DRAIN TRANSFER (SHEET 16 0F 22)

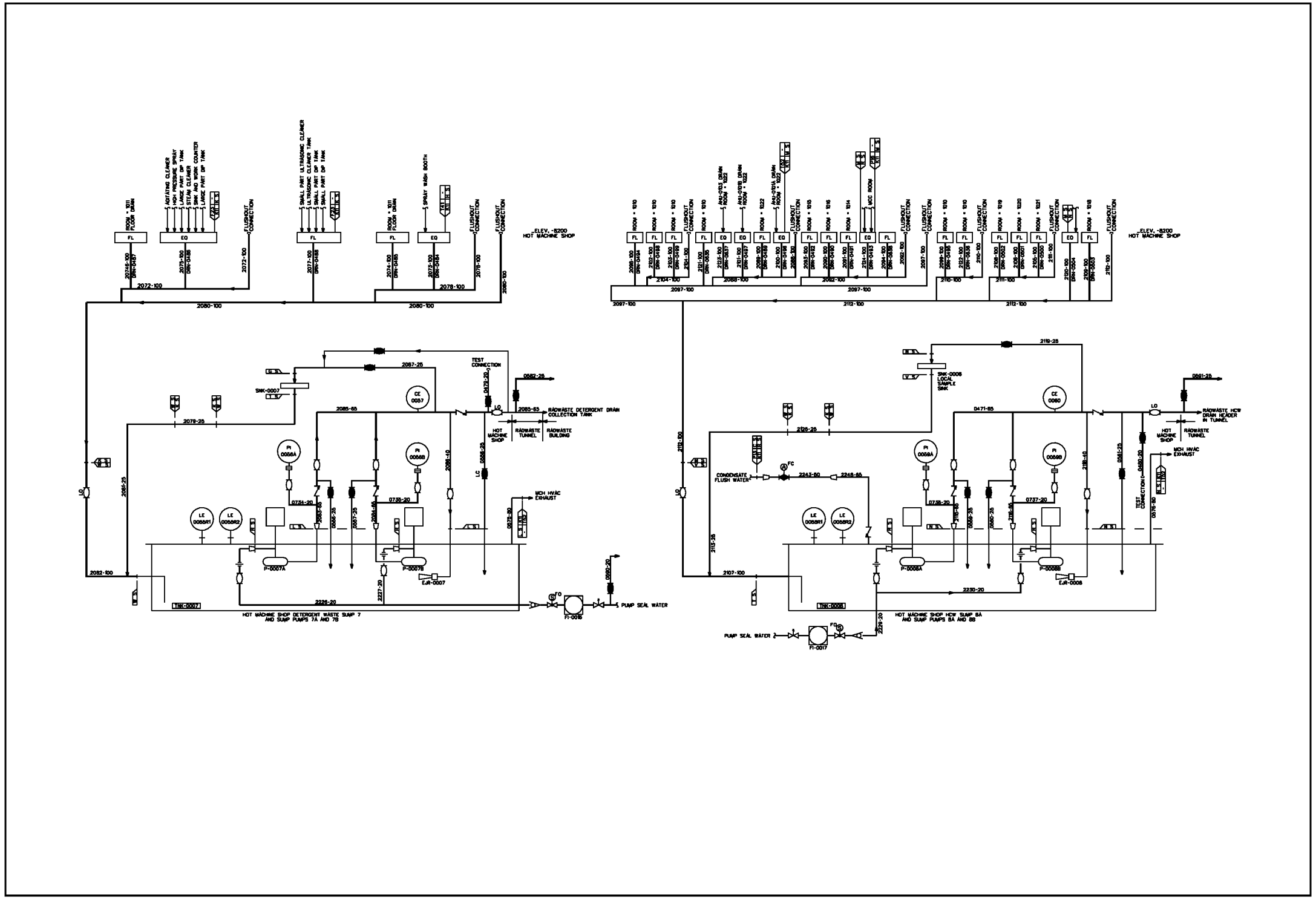

FIGURE 9.3-11 PIPING AND INSTRUMENTATION DIAGRAM, RADIOACTIVE DRAIN TRANSFER (SHEET 17 0F 22)

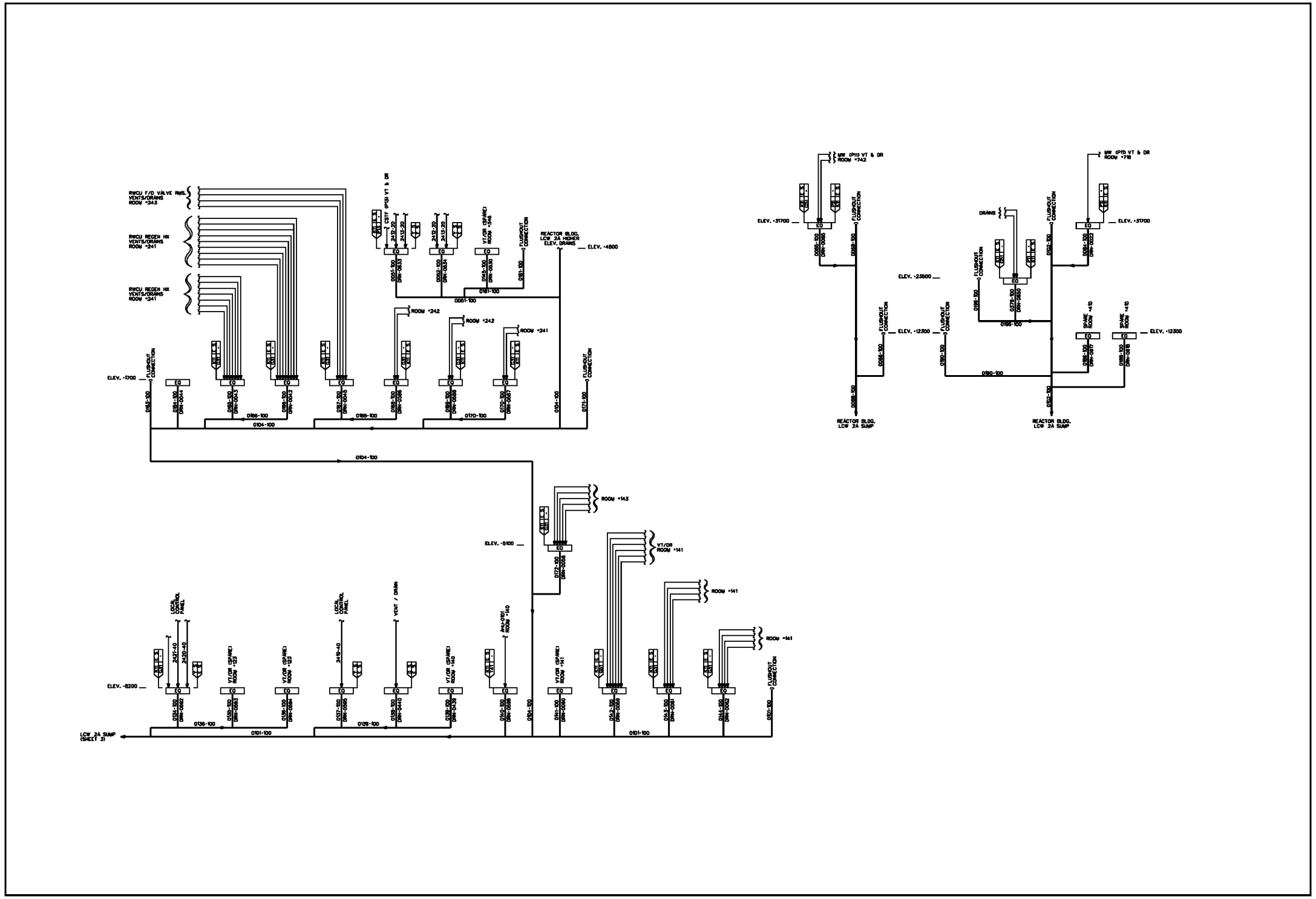

FIGURE 9.3-11 PIPING AND INSTRUMENTATION DIAGRAM, RADIOACTIVE DRAIN TRANSFER (SHEET 18 0F 22)

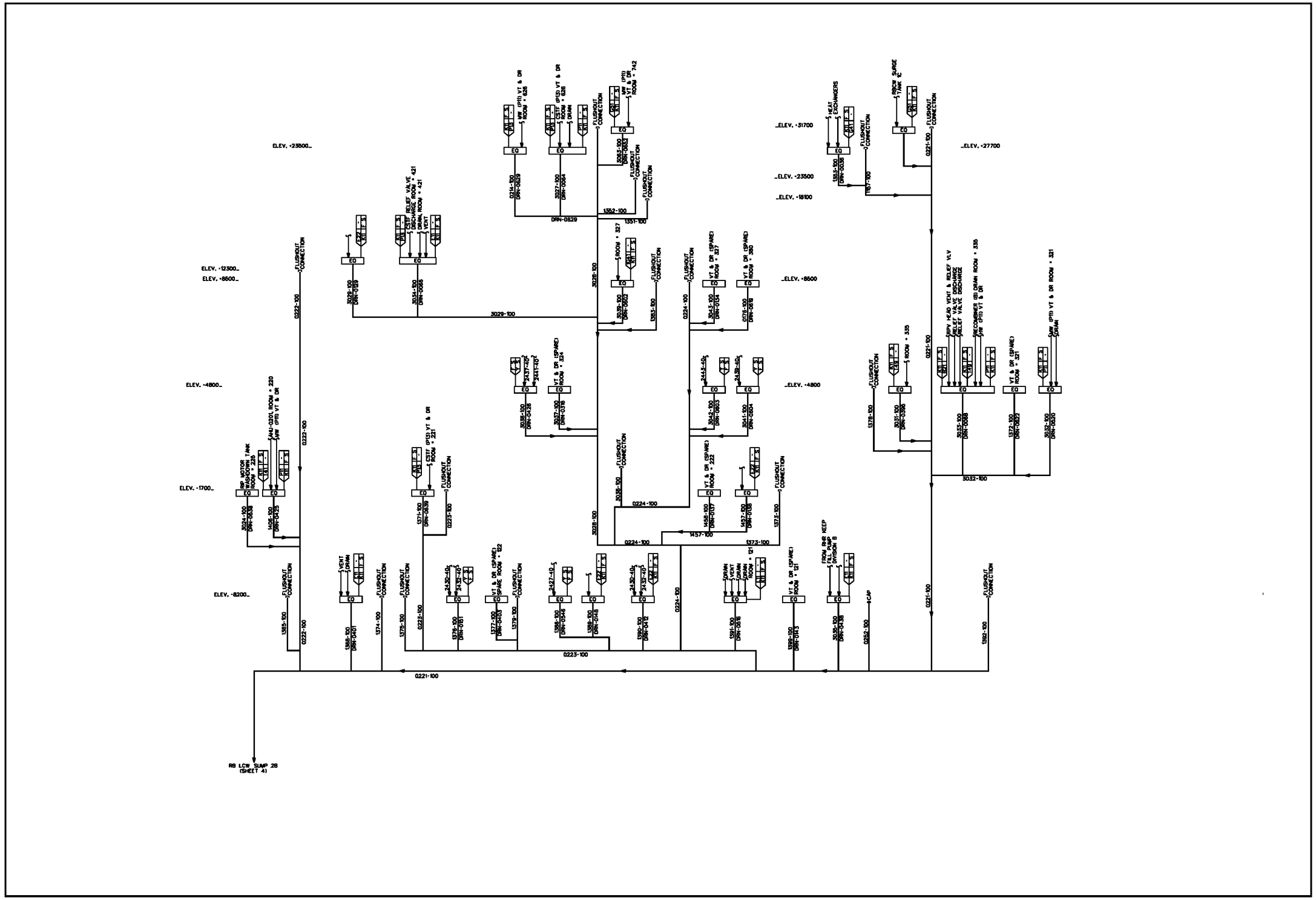

FIGURE 9.3-11 PIPING AND INSTRUMENTATION DIAGRAM, RADIOACTIVE DRAIN TRANSFER (SHEET 19 0F 22)

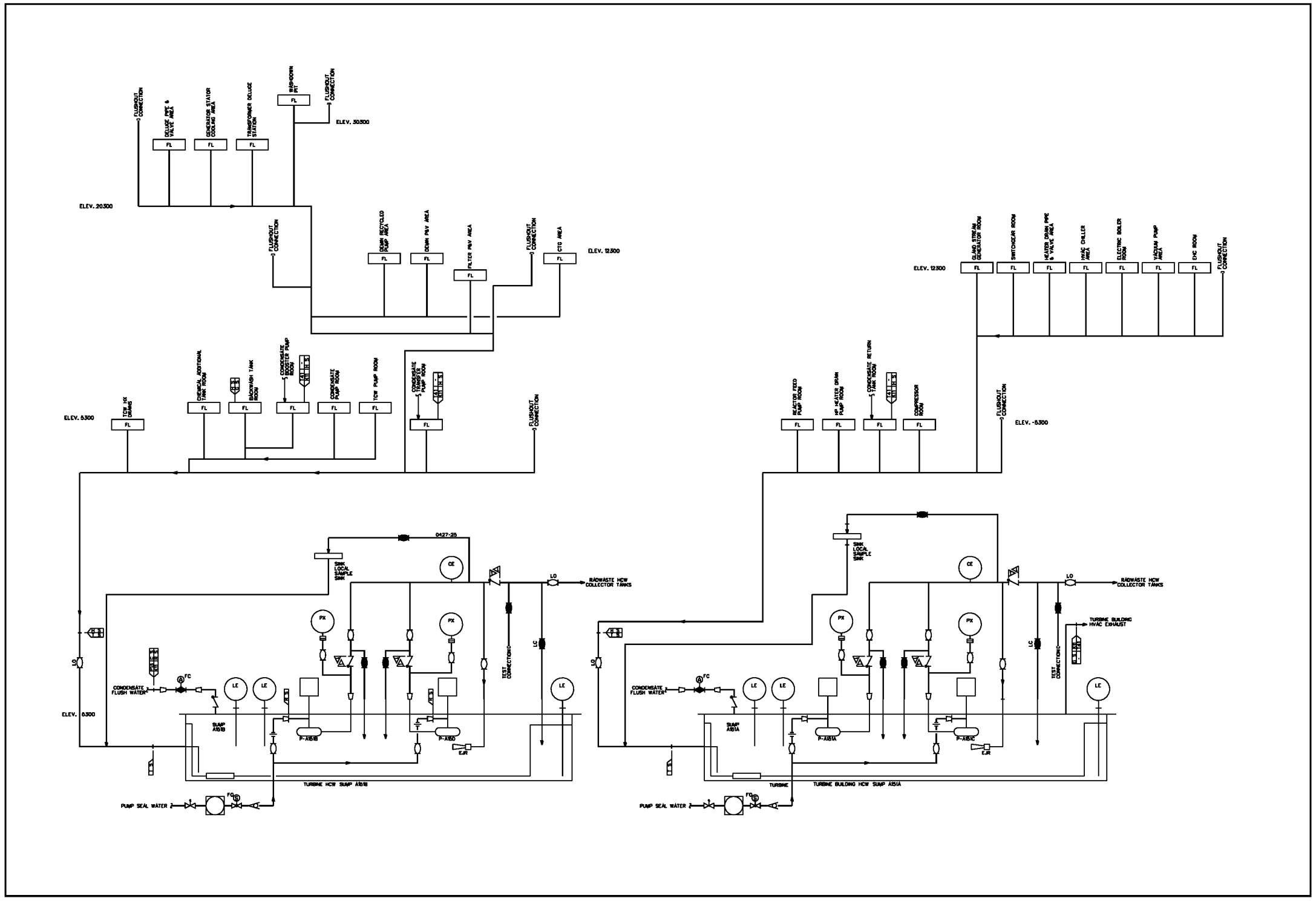

FIGURE 9.3-11 PIPING AND INSTRUMENTATION DIAGRAM, RADIOACTIVE DRAIN TRANSFER (SHEET 20 0F 22)

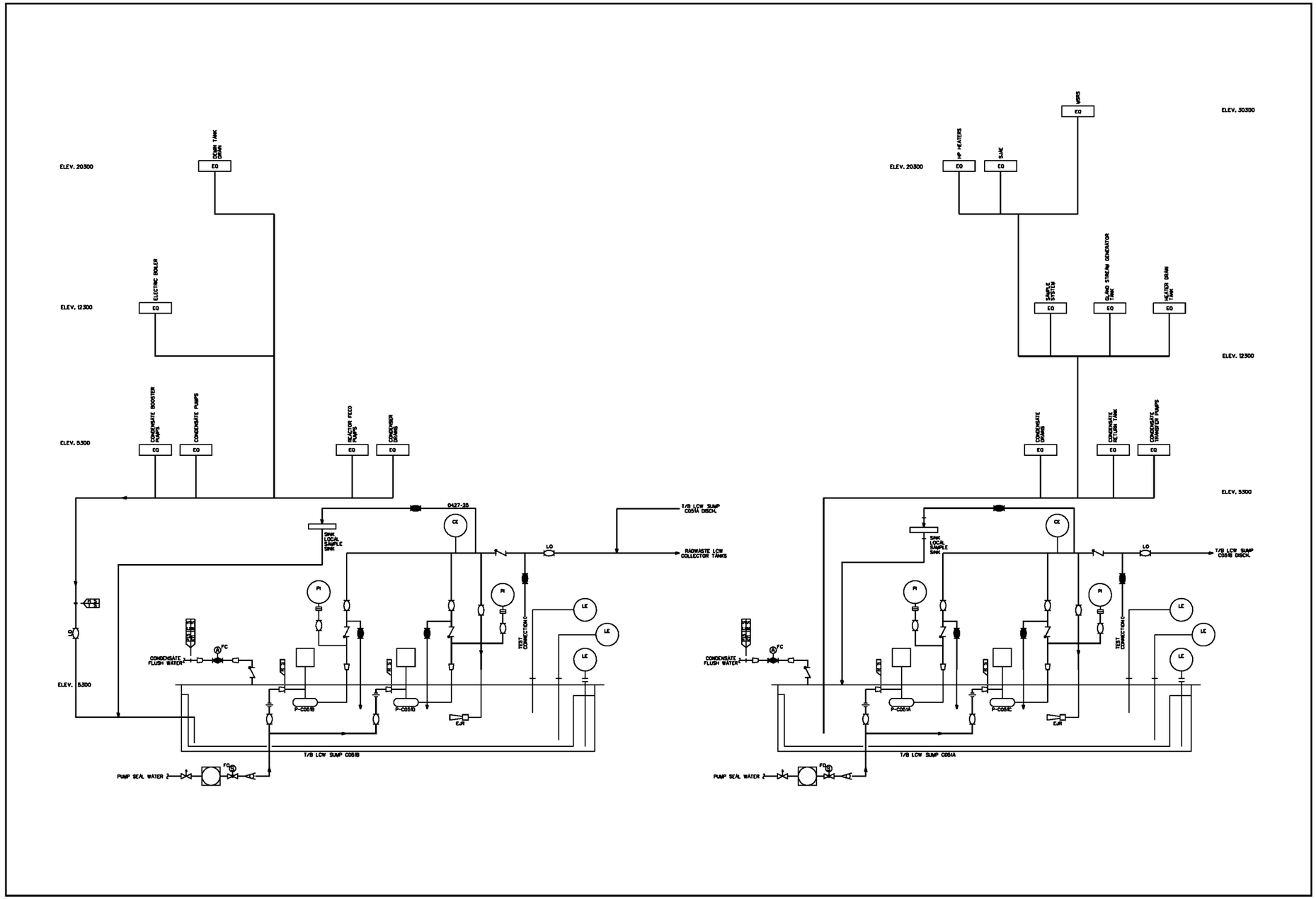

FIGURE 9.3-11 PIPING AND INSTRUMENTATION DIAGRAM, RADIOACTIVE DRAIN TRANSFER (SHEET 21 0F 22)

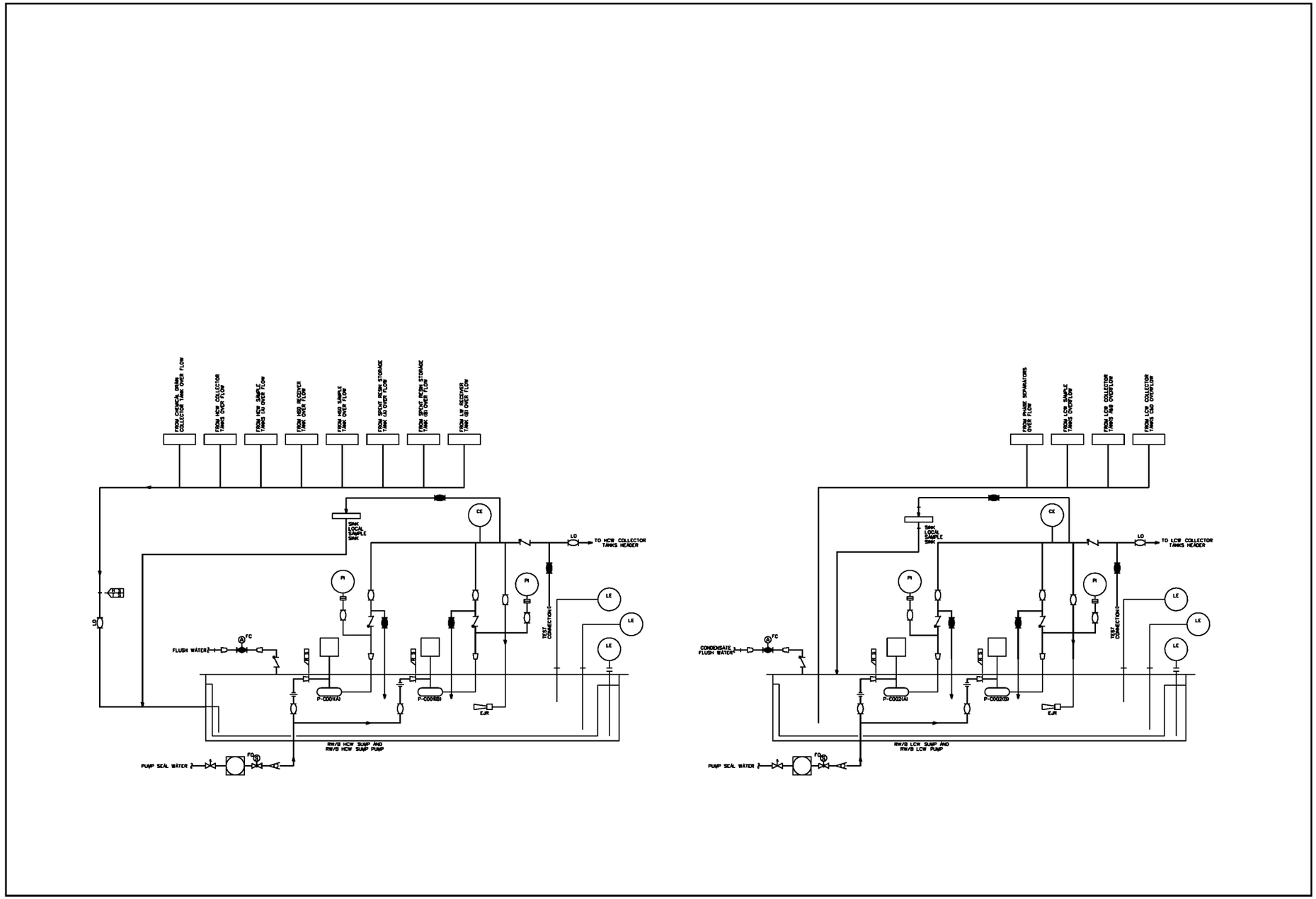

FIGURE 9.3-11 PIPING AND INSTRUMENTATION DIAGRAM, RADIOACTIVE DRAIN TRANSFER (SHEET 22 0F 22)

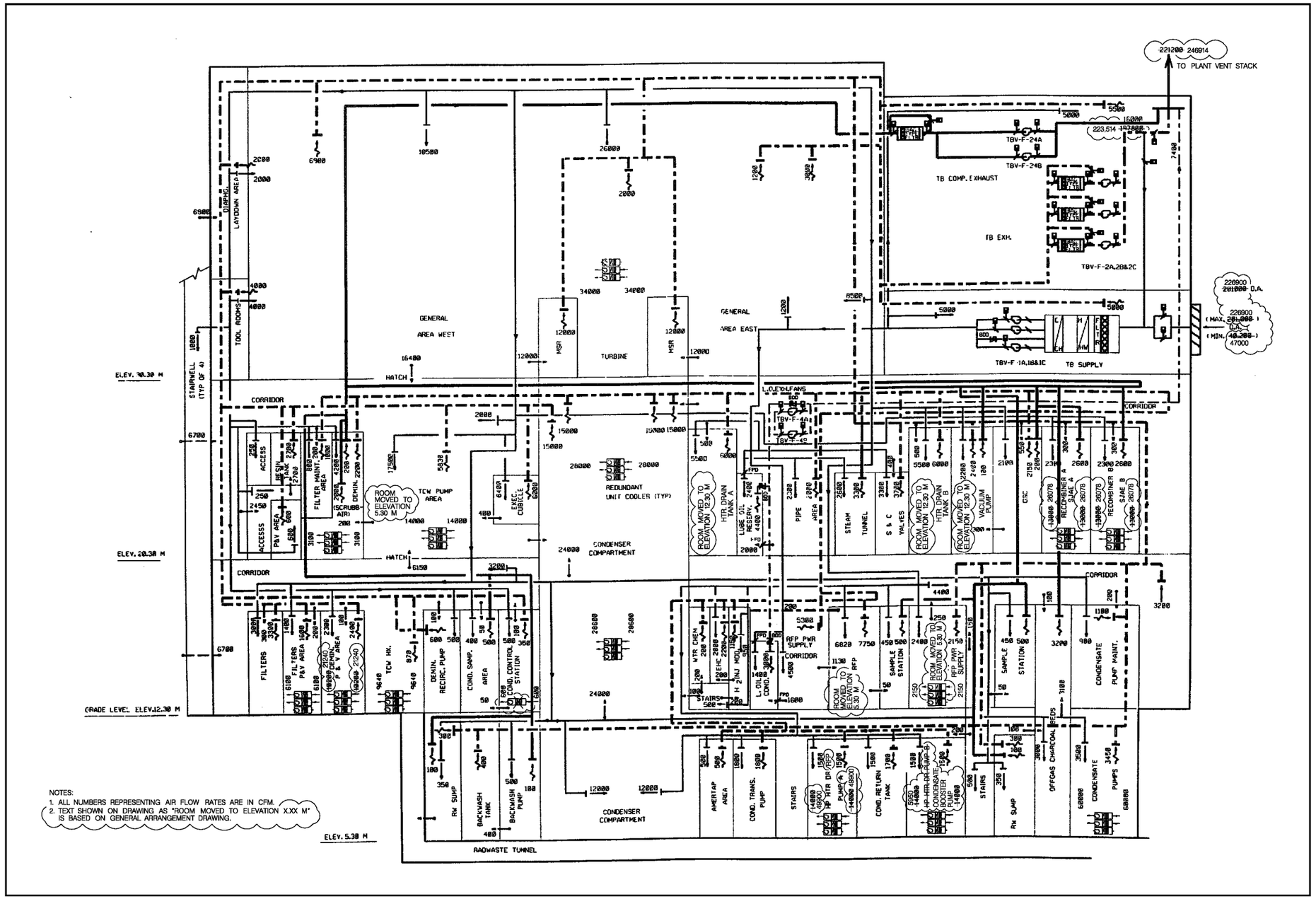

FIGURE 9.4-2a TURBINE BUILDING VENTILATION SYSTEM AIR FLOW DIAGRAM (SHEET 1 0F 1)

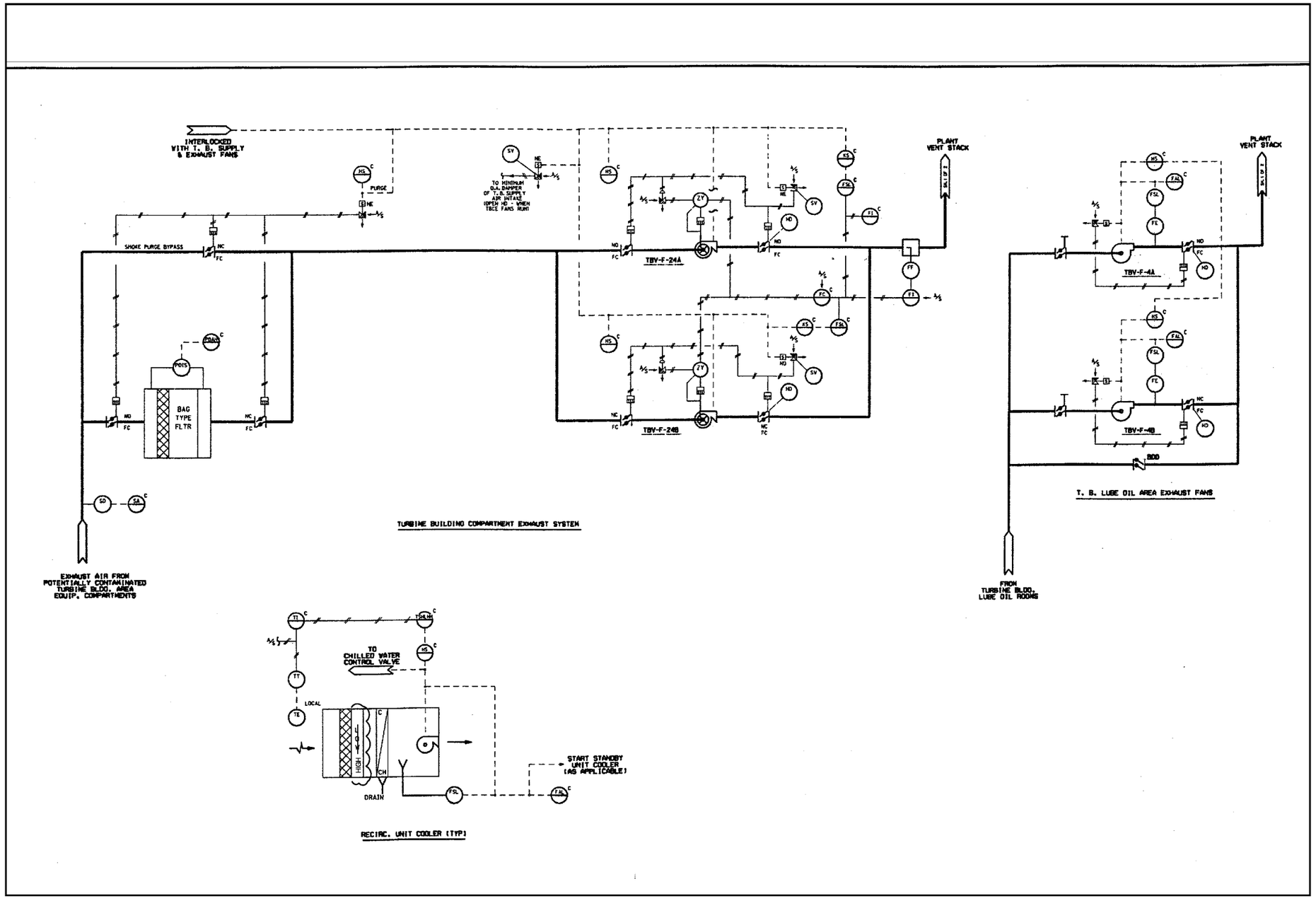

FIGURE 9.4-2b TURBINE BUILDING VENTILATION SYSTEM, CONTROL DIAGRAM (SHEET 2 0F 2)

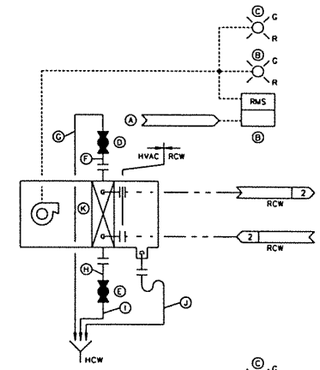

R/A ESSENTIAL HVH TYPE C

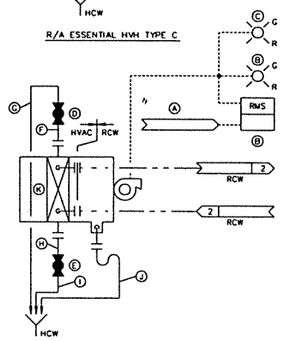

R/A ESSENTIAL HVH TYPE D

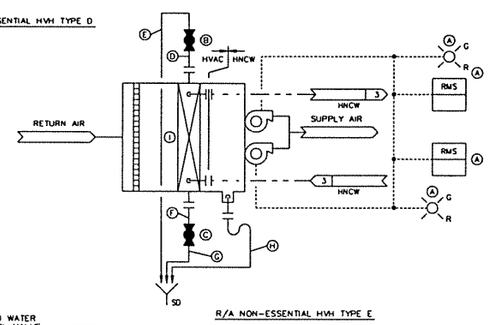

R/A NON-ESSENTIAL HVH TYPE E

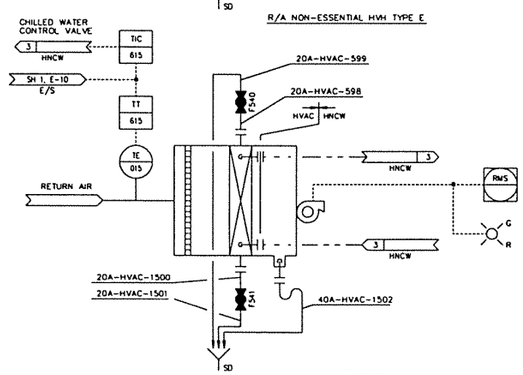

U41-D123
REFUELING MACHINE CONTROL ROOM HVH

TABLE 3: ESSENTIAL HVH

TYPE	EQ. NO.	HVH NAME	HVH INITIATION SIGNAL (A)	PANEL NO. (B)	PANEL NO. (C)	VALVE NO. (D)	VALVE NO. (E)	PIPING SIZE & NO. (F)	PIPING SIZE & NO. (G)	PIPING SIZE & NO. (H)	PIPING SIZE & NO. (I)	PIPING SIZE & NO. (J)	COOLING COIL (K)
D	U41-D101	ROC PUMP ROOM HVH	ROC PUMP START SIGNAL			F504	F505	20A-HVAC -508	20-HVAC -509	20-HVAC -510	20-HVAC -511	40-HVAC -512	B101
D	U41-D102	HPCF PUMP (C) ROOM HVH	HPCF PUMP (C) START SIGNAL			F506	F507	-513	-514	-515	-516	-517	B102
D	U41-D103	RHR PUMP (A) ROOM HVH	RHR PUMP (A) START SIGNAL			F508	F509	-518	-519	-520	-521	-522	B103
D	U41-D104	RHR PUMP (C) ROOM HVH	RHR PUMP (C) START SIGNAL			F510	F511	-523	-524	-525	-526	-527	B104
D	U41-D105	RHR PUMP (B) ROOM HVH	RHR PUMP (B) START SIGNAL			F512	F513	-528	-529	-530	-531	-532	B105
D	U41-D106	HPCF PUMP (B) ROOM HVH	HPCF PUMP (B) START SIGNAL			F514	F515	-533	-534	-535	-536	-537	B106
D	U41-D107	~~FDS ROOM HVH~~ ROOM 436	SECONDARY CONTAINMENT ISOLATION SIGNAL			F516	F517	-538	-539	-540	-541	-542	B107
D	U41-D108	~~FDS ROOM HVH~~ ROOM 425	SECONDARY CONTAINMENT ISOLATION SIGNAL			F518	F519	-543	-544	-545	-546	-547	B108
D	U41-D111	SGTS ROOM HVH (C)	SECONDARY CONTAINMENT ISOLATION SIGNAL			F524	F525	-558	-559	-560	-561	-562	B111
D	U41-D112	SGTS ROOM HVH (B)	SECONDARY CONTAINMENT ISOLATION SIGNAL			F526	F527	-563	-564	-565	-566	-567	B112
C	U41-D113	CAMS (A) ROOM HVH	SECONDARY CONTAINMENT ISOLATION SIGNAL			F528	F529	-568	-569	-570	-571	-572	B113
C	U41-D114	CAMS (B) ROOM HVH	SECONDARY CONTAINMENT ISOLATION SIGNAL			F530	F531	-573	-574	-575	-576	-577	B114

TABLE 4 : NON-ESSENTIAL AIR HANDLING UNIT (NON-SAFETY RELATED)

TYPE	EQ. NO.	HVH NAME	PANEL NO. (A)	VALVE NO. (B)	VALVE NO. (C)	PIPING SIZE & NO. (D)	PIPING SIZE & NO. (E)	PIPING SIZE & NO. (F)	PIPING SIZE & NO. (G)	PIPING SIZE & NO. (H)	COOLING COIL (I)
E	U41-D121A	R/A MS TUNNEL HVH (A) NOTE 3		F536	F537	20A-HVAC -588	20A-HVAC -589	20A-HVAC -590	20A-HVAC -591	40A-HVAC -592	B121A
E	U41-D121B	R/A MS TUNNEL HVH (B) NOTE 3		F538	F539	20A-HVAC -593	20A-HVAC -594	20A-HVAC -595	20A-HVAC -596	40A-HVAC -597	B121B
E	U41-D115	R/A SPCU PUMP ROOM		F	F	20A-HVAC -1503	20A-HVAC -1504	20A-HVAC -1505	20A-HVAC -1506	40A-HVAC -1507	B115
~	U41-D123	R/A REFUELING MACHINE CONTROL ROOM HVH		F	F	20A-HVAC -598	20A-HVAC -599	20A-HVAC -1500	20A-HVAC -1501	40A-HVAC -1502	B123
D	U41-D109	FPC PUMP (A) ROOM HVH		F520	F521	-548	-549	-550	-551	-552	B109
D	U41-D110	FPC PUMP (B) ROOM HVH		F522	F523	-553	-554	-555	-556	-557	B110

TABLE 5 : NON-ESSENTIAL AIR HANDLING UNIT (NON-SAFETY RELATED)

TYPE	EQ. NO.	HVH NAME	PIPE SIZE & NO. (B)	COOLING COIL (C)
MV504	U41-D131A	CRD CONTROL ROOM	20A-HVAC -1514	B131A
MV504	U41-D132A	MG SET ROOM (A) NOTE 4	20A-HVAC -1517	B132A
MV504	U41-D132B	MG SET ROOM (C) NOTE 4	20A-HVAC -1518	B132B
MV504	U41-D133A	NON-DIVISIONAL ELECTRICAL EQUIPMENT ZONE NOTE 4	20A-HVAC -1519	B133
MV504	U41-D134A	ISI ROOM	20A-HVAC -1512	B134A

R/B AND C/B HVAC

NOTES:

1. PIPING MATERIALS FOR VENT AND DRAIN SHALL BE CS.
2. PIPING DESIGN/QUALITY CLASSIFICATION SHALL BE 7G EXCEPT OTHERWISE SPECIFIED.
3. THESE HVH'S CAN BE COMBINED INTO A COMMON COIL.
4. THESE UNITS ARE IN CONTROL BUILDING.

REFERENCE DOCUMENTS:

	MPL NO.
1. PIPING AND INSTRUMENT SYMBOLS DIAGRAM	A10-3030
2. REACTOR BLDG COOLING WATER SYS P&ID	P21-1010
3. HVAC NORMAL COOLING WATER SYS P&ID	P24-1010

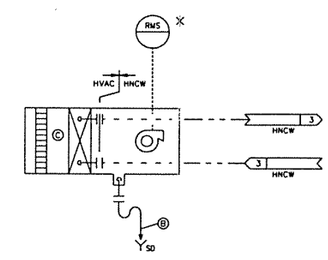

R/A NON-ESSENTIAL UNIT
TYPE MV504

U41-1010

107E5189\8065802

FIGURE 9.4-3 SECONDARY CONTAINMENT HVAC SYSTEM (Sheet 2 of 3)

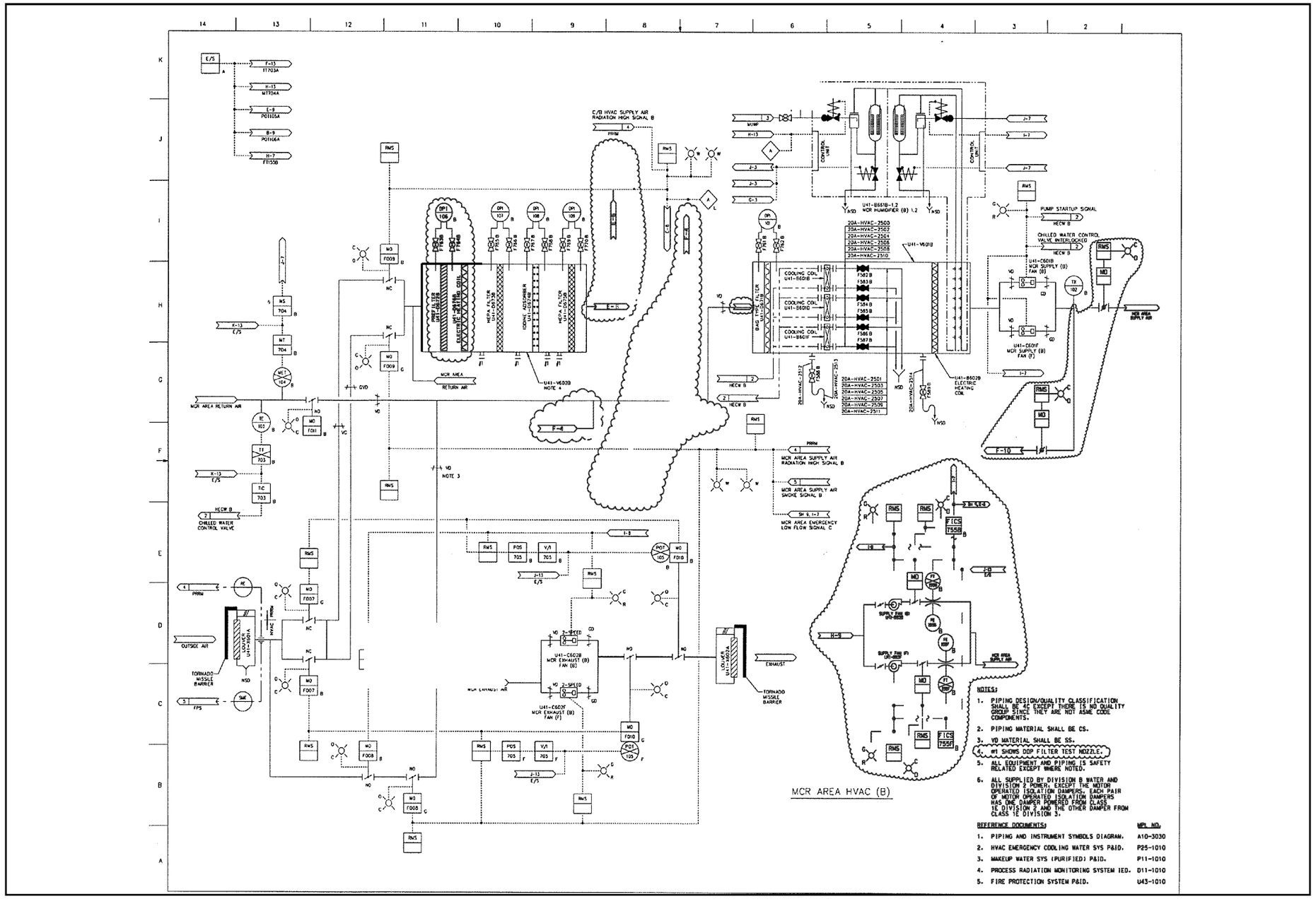

FIGURE 9.4-1 CONTROL BUILDING HVAC PFD (SHEET 1 0F 5)

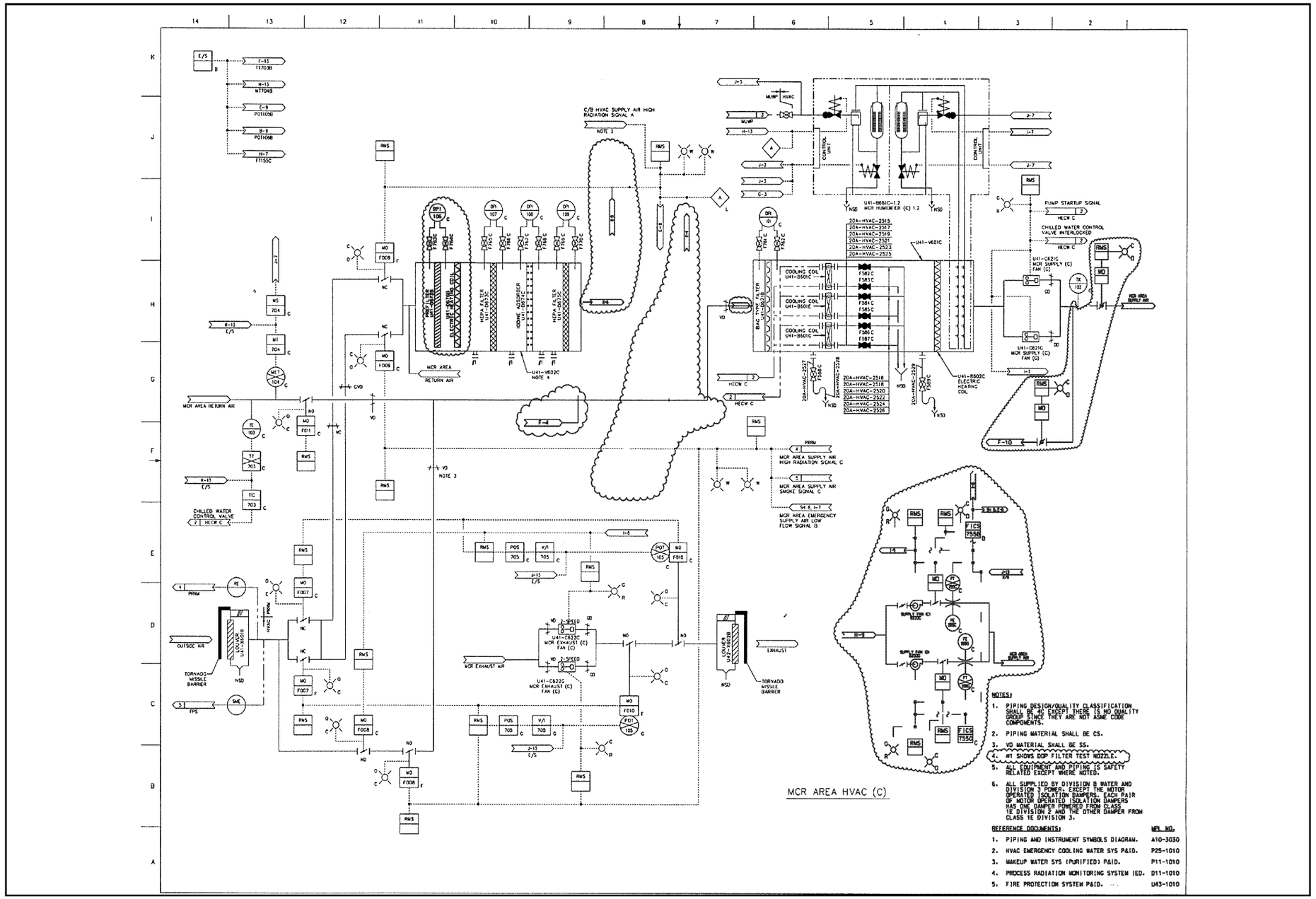

FIGURE 9.4-1 CONTROL BUILDING HVAC PFD (SHEET 2 0F 5)

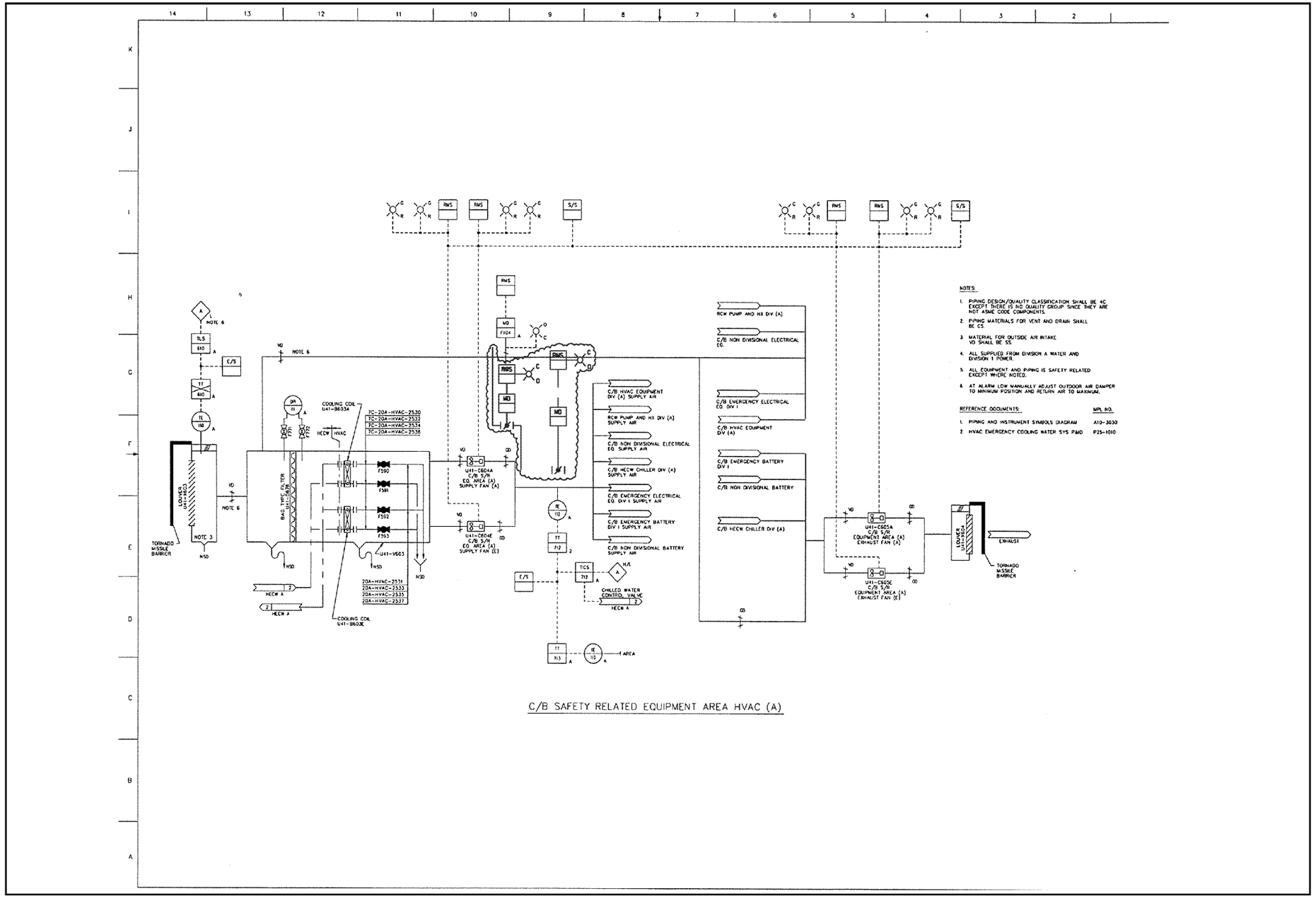

FIGURE 9.4-1 CONTROL BUILDING HVAC PFD (SHEET 3 0F 5)

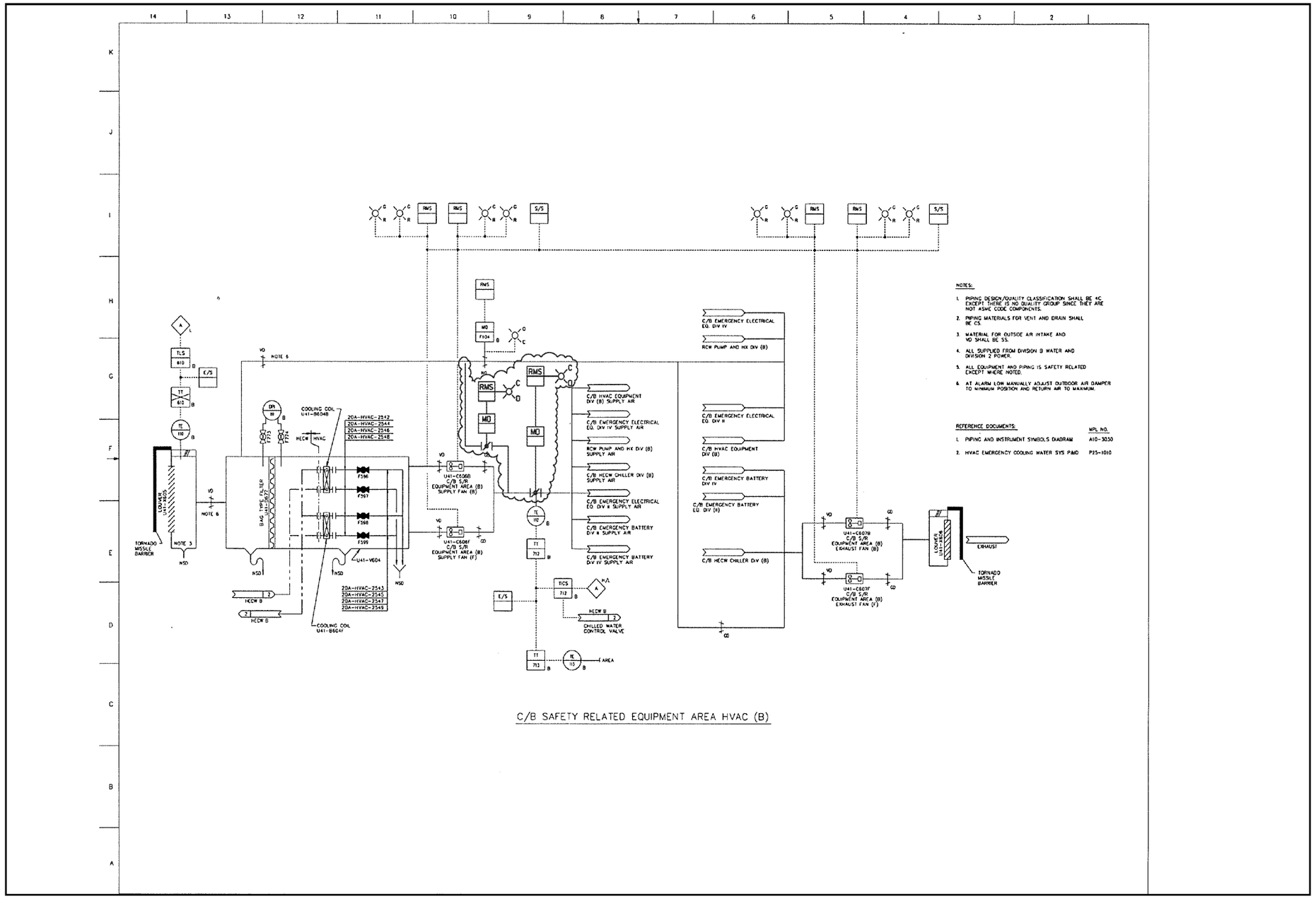

FIGURE 9.4-1 CONTROL BUILDING HVAC PFD (SHEET 4 0F 5)

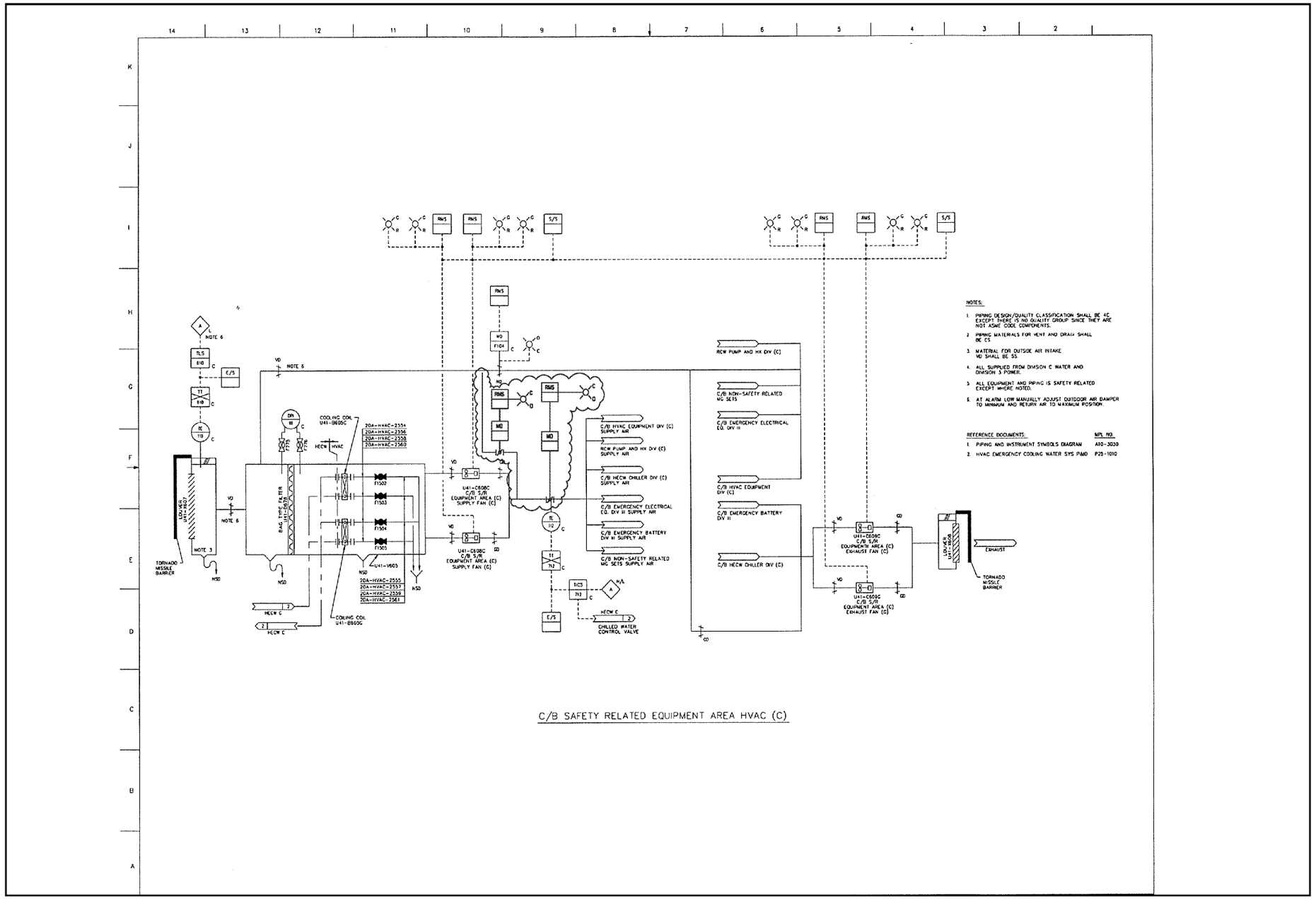

FIGURE 9.4-1 CONTROL BUILDING HVAC PFD (SHEET 5 0F 5)

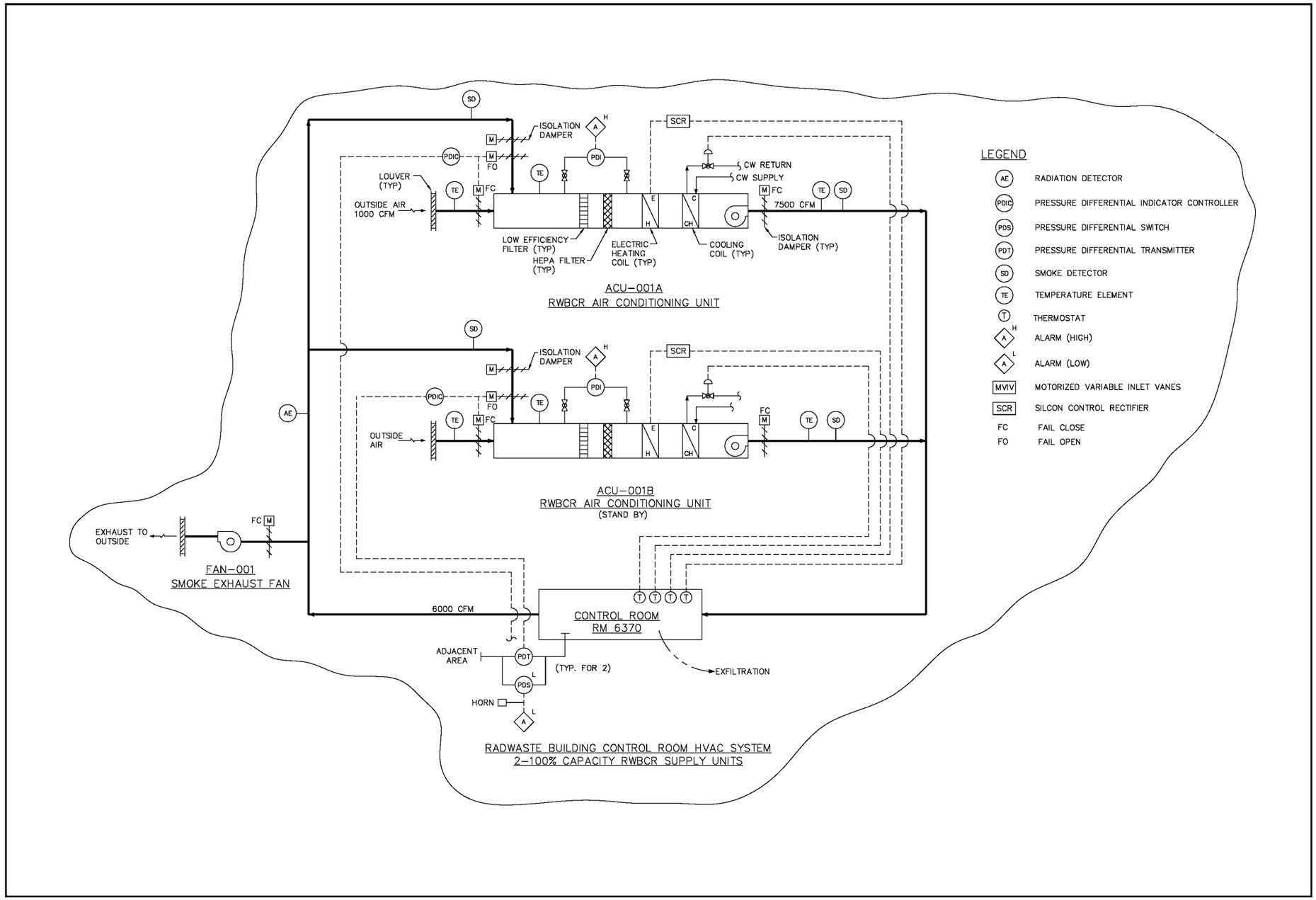

FIGURE 9.4-10 RADWASTE BUILDING HVAC P&ID (SHEET 1 OF 3)

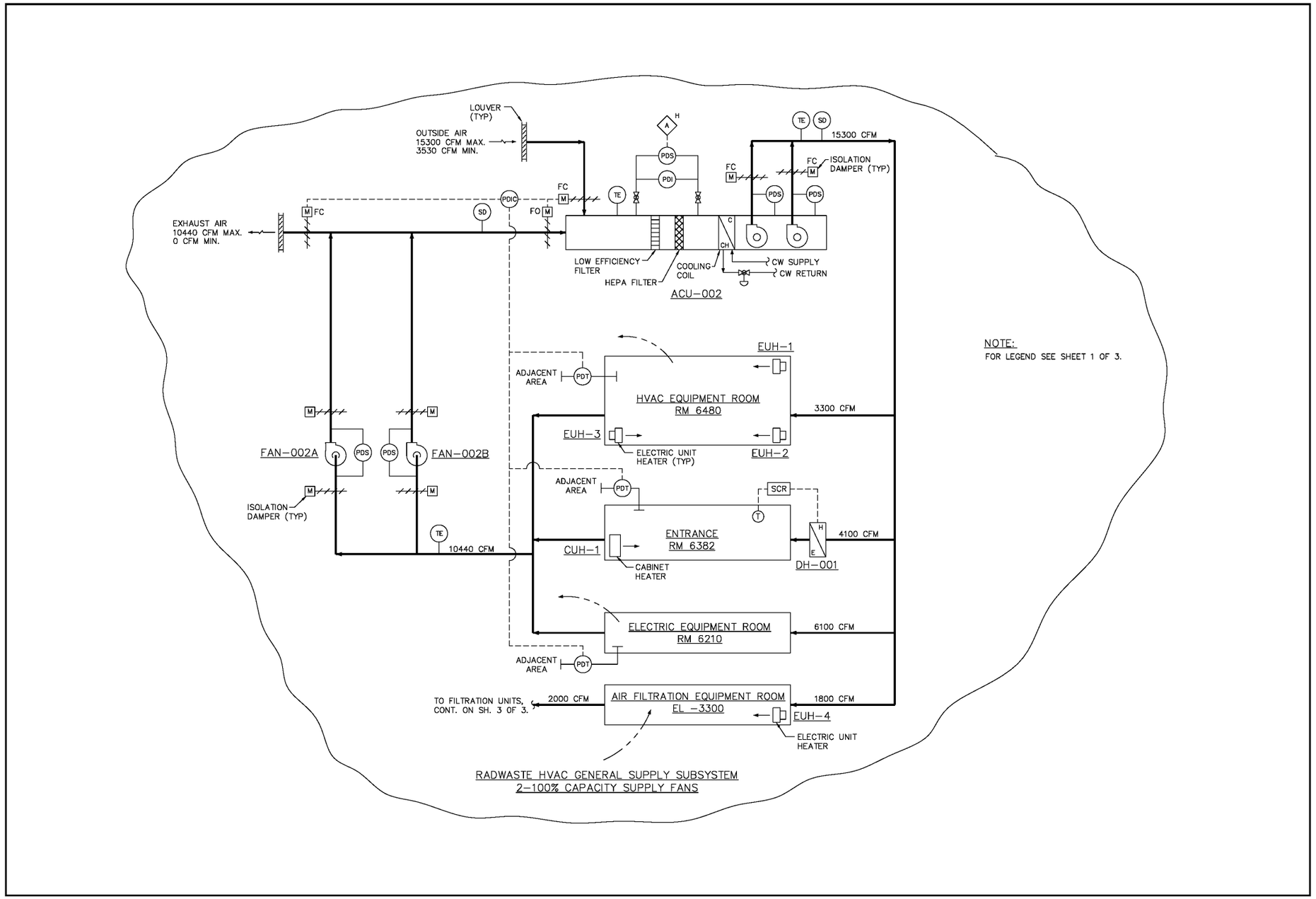

FIGURE 9.4-10 RADWASTE BUILDING HVAC P&ID (SHEET 2 OF 3)

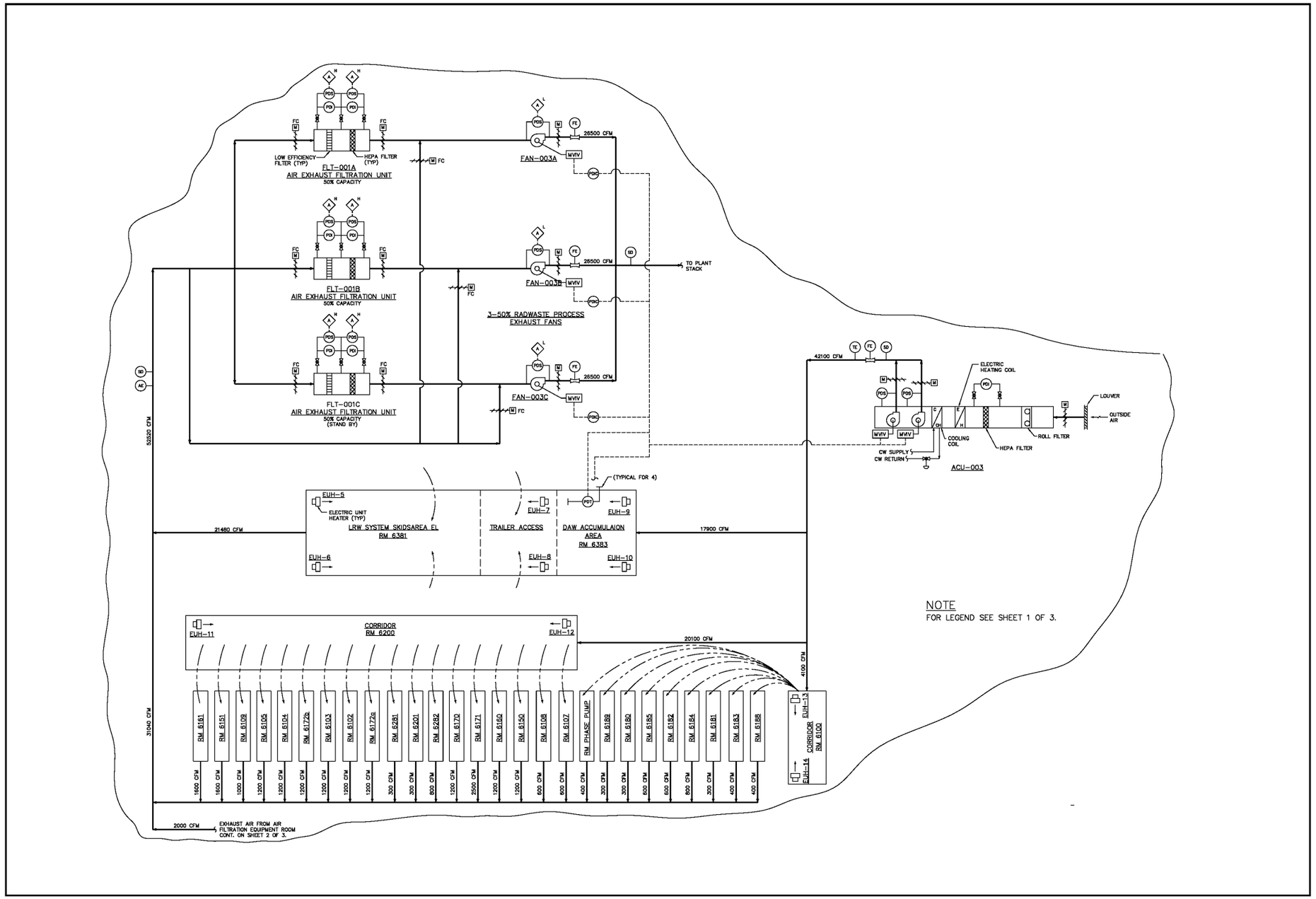

FIGURE 9.4-10 RADWASTE BUILDING HVAC P&ID (SHEET 3 OF 3)

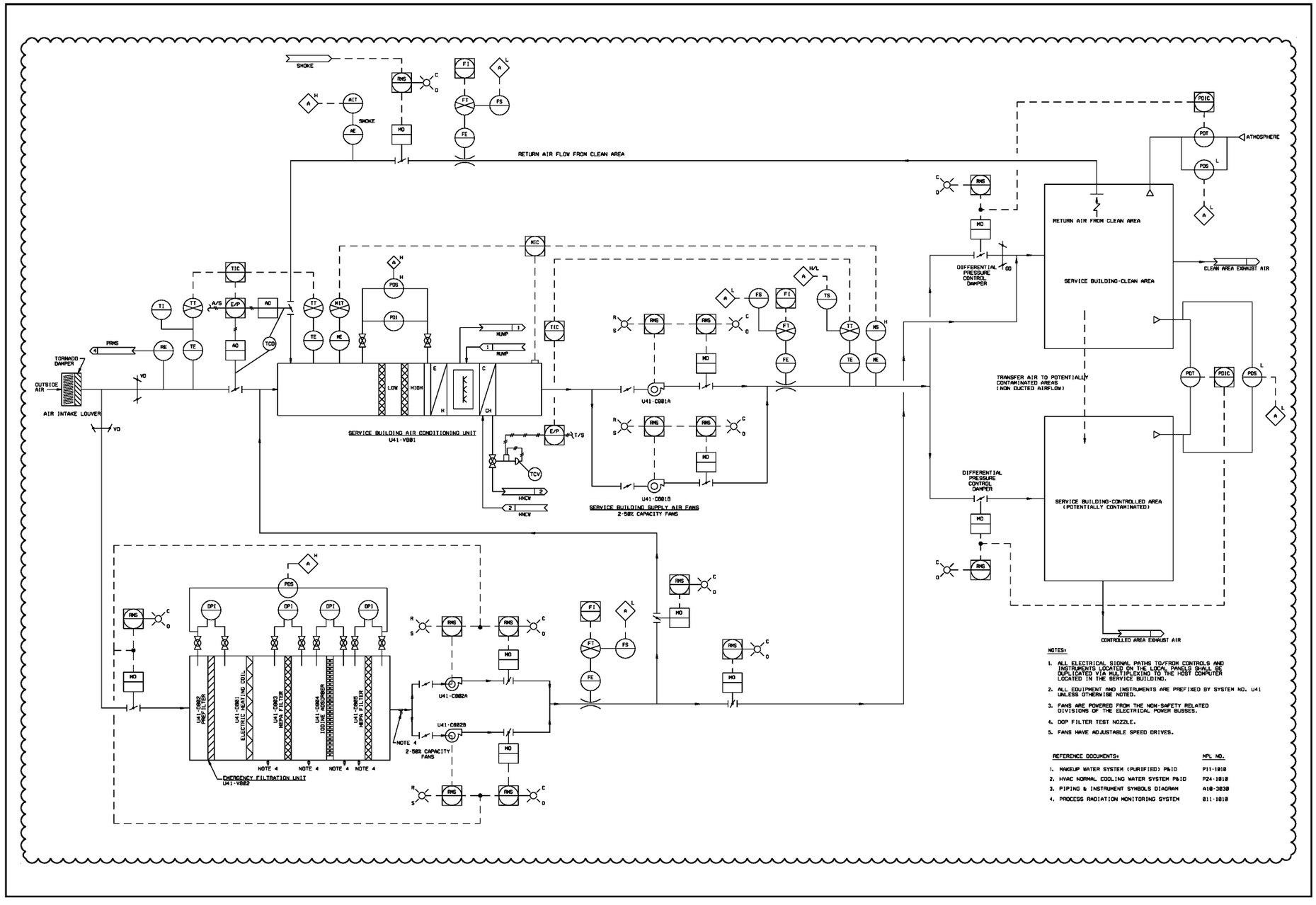

FIGURE 9.4-11 SERVICE BUILDING HVAC P&ID (SHEET 1 OF 2)

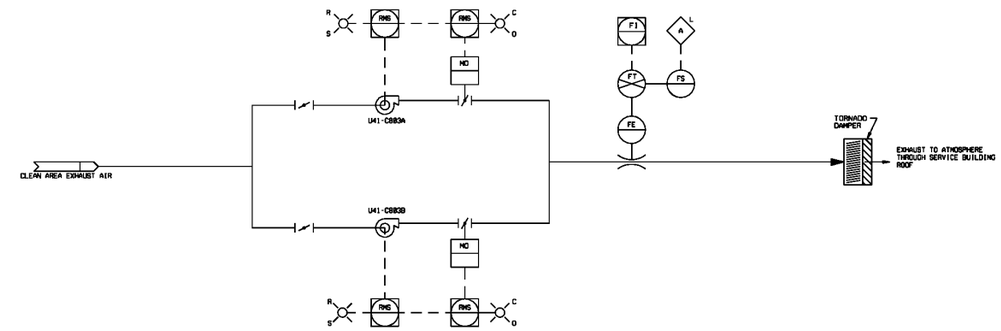

SERVICE BUILDING CLEAN AREA EXHAUST FAN
2- 50% CAPACITY FANS

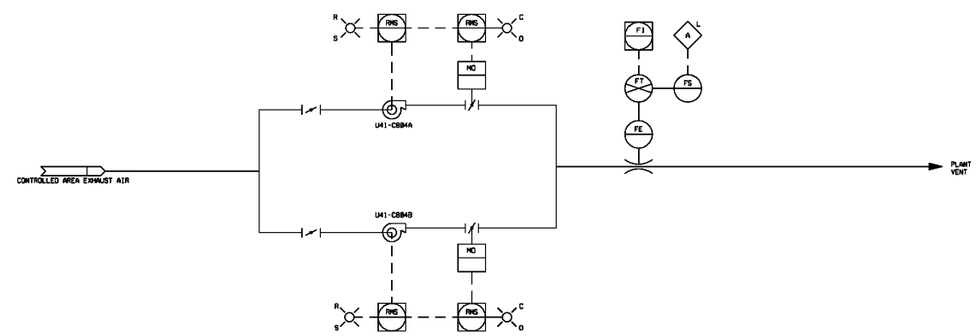

SERVICE BUILDING CONTROLLED AREA EXHAUST FAN
2- 50% CAPACITY FANS

NOTES:

1. ALL ELECTRICAL SIGNAL PATHS TO/FROM CONTROLS AND INSTRUMENTS LOCATED ON THE LOCAL PANELS SHALL BE DUPLICATED VIA MULTIPLEXING TO THE HOST COMPUTER LOCATED IN THE SERVICE BUILDING.
2. ALL EQUIPMENT AND INSTRUMENTS ARE PREFIXED BY SYSTEM NO. U41 UNLESS OTHERWISE NOTED.
3. FANS ARE POWERED FROM THE NON-SAFETY RELATED DIVISIONS OF THE ELECTRICAL POWER BUSSES.
4. FANS HAVE ADJUSTABLE SPEED DRIVES.

REFERENCE DOCUMENTS:	MPL NO.
1. PIPING & INSTRUMENT SYMBOLS DIAGRAM	A18-3030

FIGURE 9.4-11 SERVICE BUILDING HVAC P&ID (SHEET 2 OF 2)

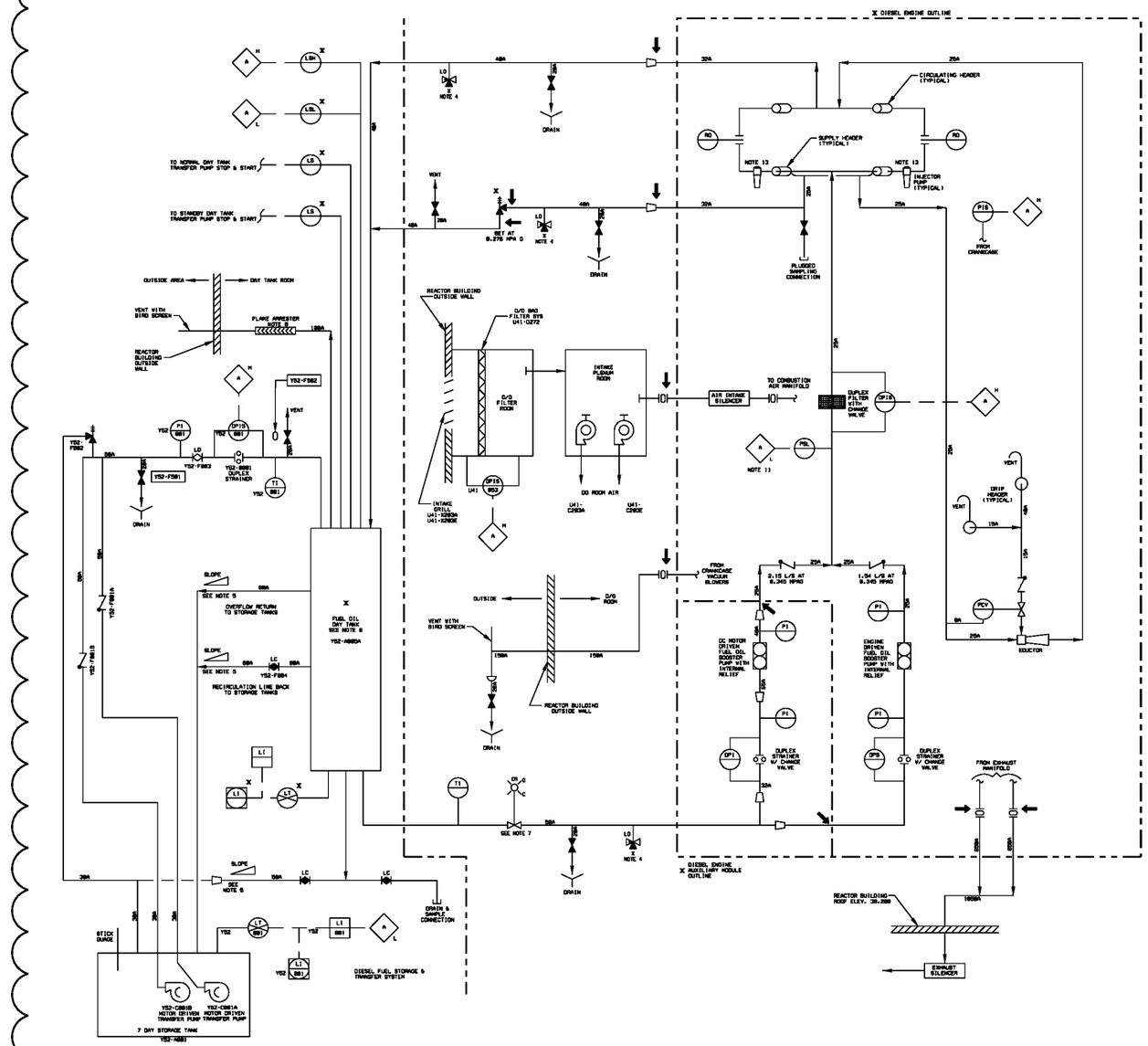

NOTES:

1. EQUIPMENT WITHIN DIESEL ENGINE AND DIESEL ENGINE AUXILIARY MODULE OUTLINES ARE FURNISHED ON ENGINE OR MODULE BY SELLER, AND MAY VARY DEPENDING ON UNIQUE DESIGN.
2. ALL VALVES AND INSTRUMENTS ARE PREFIXED BY SYSTEM NUMBER R43 UNLESS OTHERWISE INDICATED.
3. ALARMS ARE LOCATED IN LOCAL DIESEL GENERATOR PANEL WITH GROUP REPEAT TROUBLE ALARM PROVIDED TO CONTROL ROOM PANEL.
4. TWO POSITION 90° TURN THREE WAY PLUG VALVE. PLUG PORT MARKED X.
5. MINIMUM SLOPE OF 3.18MM/3.048MM REQUIRED.
6. TANK TO BE AT ELEVATION TO PROVIDE FLOODED SUCTION AT BOTH DIESEL ENGINE FUEL OIL PUMPS (ELEV. 23,500MM). ENGINE BASE IS AT ELEV 12,300MM.
7. LOCATE MANUAL BLOCK VALVE INSIDE DAY TANK ROOM WITH EXTENDED HANDWHEEL IN DIFFERENT FIRE ZONE.
8. FLAME ARRESTER TO BE MOUNTED WITHIN 4.57 M OF VENT OPENING.
9. ALL VENT AND DRAIN VALVES ON FUEL OIL PIPING SHALL BE PROVIDED WITH SCREWED CAPS OR PLUGS.
10. X DESIGNATED EQUIPMENT FURNISHED BY SELLER.
11. THIS ALARM IS DISABLED WHEN THE DIESEL IS NOT RUNNING.
12. FUTURE LINE NUMBERS ARE REPRESENTED BY "[L•]" TO BE SUPPLIED AT FINAL DESIGN STAGE.
13. SUPPLIER SHALL PROVIDE SYSTEM TO PREVENT FLOODING OF CYLINDERS DURING ENGINE SHUTDOWN BY LEAKAGE THROUGH THE FUEL PUMPS DUE TO THE DAY TANK HEAD PRESSURE (NOTE 6).
14. ALL EQUIPMENT AND PIPING EXCEPT THAT WITHIN THE DIESEL ENGINE OUTLINE IS SAFETY CLASS 3. QUALITY GROUP C (ASME, SECTION III).

LEGEND:

← ——— DENOTES PIPING SPEC CHANGE

MPL NO. R43-1070

(NOTE: LINE NUMBERS TO BE ADDED DURING DETAILED DESIGN PHASE.)

FIGURE 9.5-6 STANDBY DIESEL GENERATOR FUEL OIL AND INTAKE AND EXHAUST SYSTEMS

NOT FOR PUBLIC RELEASE

FIGURE 9A.4-17 TURBINE BUILDING FIRE PROTECTION, SECTION A-A

NOT FOR PUBLIC RELEASE

FIGURE 9A.4-18 TURBINE BUILDING FIRE PROTECTION AT ELEVATION 5300 mm

NOT FOR PUBLIC RELEASE

FIGURE 9A.4-19 TURBINE BUILDING FIRE PROTECTION AT ELEVATION 12300 mm

NOT FOR PUBLIC RELEASE

FIGURE 9A.4-20 TURBINE BUILDING FIRE PROTECTION AT ELEVATION 20300 mm

NOT FOR PUBLIC RELEASE

FIGURE 9A.4-21 TURBINE BUILDING FIRE PROTECTION AT ELEVATION 30300 mm

NOT FOR PUBLIC RELEASE

FIGURE 9A.4-28 RADWASTE BUILDING FIRE PROTECTION, RWB SECTIONS

NOT FOR PUBLIC RELEASE

FIGURE 9A.4-29 RADWASTE BUILDING FIRE PROTECTION AT ELEVATION -1500 mm

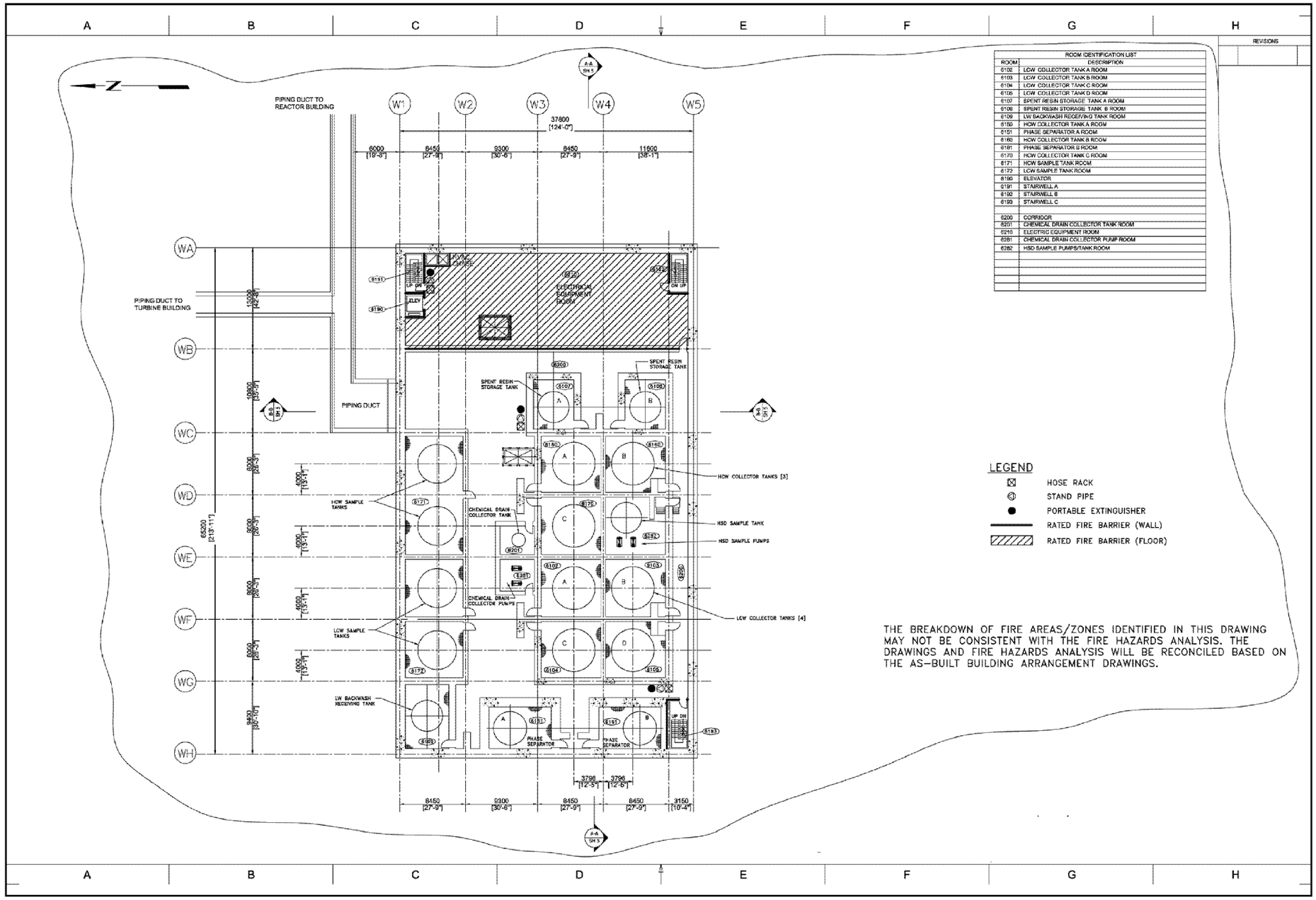

FIGURE 9A.4-30 RADWASTE BUILDING FIRE PROTECTION AT ELEVATION 4800 mm

NOT FOR PUBLIC RELEASE

FIGURE 9A.4-31 RADWASTE BUILDING FIRE PROTECTION AT ELEVATION 12300 mm

NOT FOR PUBLIC RELEASE

FIGURE 9A.4-32 RADWASTE BUILDING FIRE PROTECTION AT ELEVATION 18300 mm

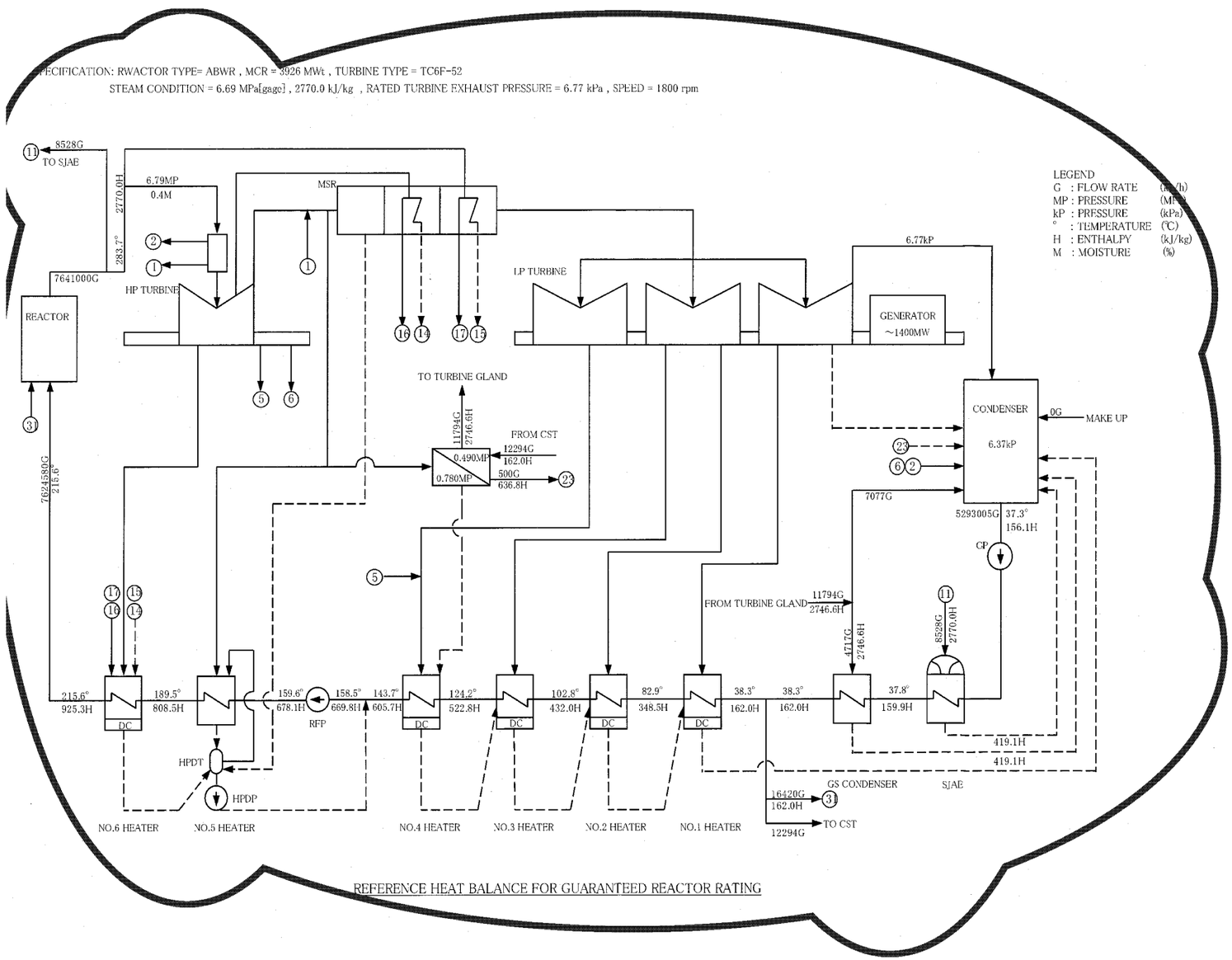

FIGURE 10.1-2 PLANT REFUELING AND SERVICING SEQUENCE

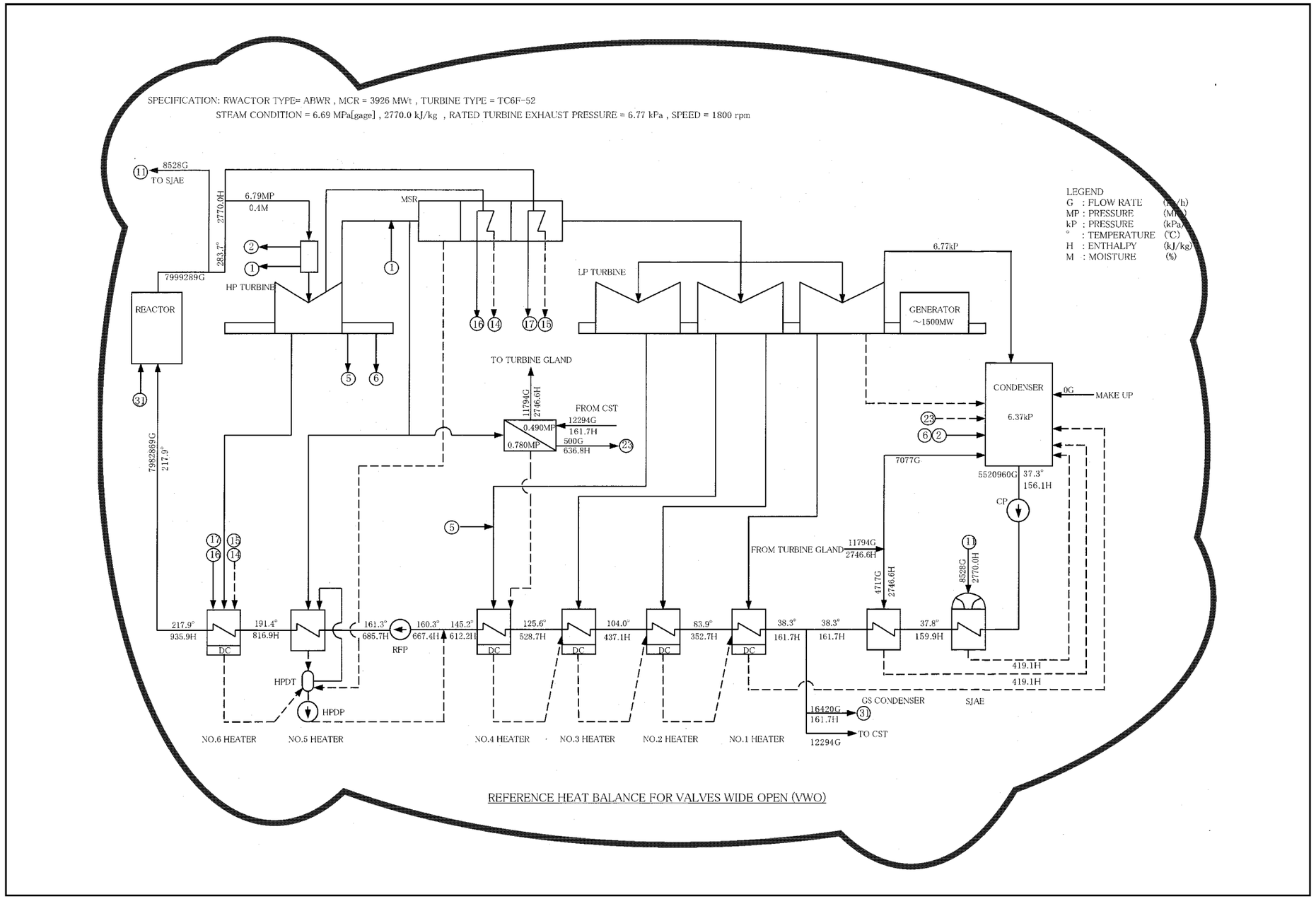

FIGURE 10.1-3 PLANT REFUELING AND SERVICING SEQUENCE

DESCRIPTION	SHEET NUMBER	SUBSYSTEM		LOCATION
FUNDAMENTAL FLOW DIAGRAM	2	VARIOUS	N/A	N/A
LOW CONDUCTIVITY COLLECTOR TANKS A,B,C,D	3	LCW	LOW CONDUCTIVITY WASTE	RADWASTE BLDG
LCW FILTER A,B	4			
LCW REVERSE OSMOSIS UNIT	4a			
LCW DEMINERALIZER A,B,; NEW RESIN HOPPER	5			
LCW SAMPLE TANK A,B AND CANAL DISCHARGE	6	LCW	LOW CONDUCTIVITY WASTE	
HIGH CONDUCTIVITY COLLECTOR TANKS A,B,C	7	HCW	HIGH CONDUCTIVITY WASTE	
DELETED	8			
	9			
HCW FILTER A,B	9a			
	10			
HCW REVERSE OSMOSIS UNIT	10a			
	11			
HCW DEMINERALIZER A,B	11a	HCW	HIGH CONDUCTIVITY WASTE	RADWASTE BLDG
HCW SAMPLE TANKS A,B	11b	HCW	HIGH CONDUCTIVITY WASTE	RADWASTE BLDG
HSD RECEIVING TANK	12	HSD	SHOWER AND LAUNDRY DRAINS	SERVICE BLDG
HSD STRAINER A,B	13	HSD	SHOWER AND LAUNDRY DRAINS	RADWASTE BLDG
HSD SAMPLE TANK	14	HSD	SHOWER AND LAUNDRY DRAINS	RADWASTE BLDG
CHEMICAL DRAIN COLLECTOR TANK	14a	CHD	LAB, DECON, MAINT, SHOP DRAIN	RADWASTE BLDG
CUW AND CF BACKWASH RECEIVING TANKS	15	SR	SPENT RESIN	REACTOR/TURBINE BLDG
LW BACKWASH RECEIVING TANK	15a	SR	SLUDGE	RADWASTE BLDG
PHASE SEPERATORS A,B	16	SR	POWDERED SPENT RESIN/SLUDGE	
SPENT RESIN STORAGE TANK AND DEWATERING FACILITY	17	SR	SPENT RESIN	
	18			
	19			
	20			
	21			
DELETED	22			
	23			
	24			
	25			
	26			
	27			
	28			
	29			
	30			
	31			
	32			
	33			
	34			
	35			
	36			

NOTES:

1. SYSTEM DESIGN CONDITION

SYSTEM DESIGN CONDITIONS ARE SHOWN AS FOLLOWS, UNLESS OTHERWISE NOTED.

ITEM		APPLICATION	
CLASS		4G	
MAXIMUM OPERATION PRESSURE (MPa G)		10.0	
MAXIMUM OPERATION TEMPERATURE (°C)		65	
NORMAL OPERATION TEMPERATURE (°C)		BELOW 60	
SEISMIC CATEGORIZATION		B	
PROCESS FLUID		WATER	
PIPING MATERIAL	SS	CORROSIVES	
	CS	NORMAL	
PIPING THICKNESS	SS	SCH40	
	CS	OVER 65A	SCH40
		BELOW 65A	SCH80

2. ALL EQUIPMENTS & INSTRUMENTS ARE PREFIXED BY SYSTEM NUMBER K17 AND SUBSYSTEM ABBREVIATION UNLESS OTHERWISE NOTED.
3. INSTRUMENTS WITH PART NUMBER OF THE 600 SERIES ARE LOCATED IN MAIN CONTROL ROOM (MCR).
4. IT IS INTENDED THAT AN AIR BREAK BE PROVIDED TO PREVENT FLOW FROM THE RW/B HCW INTO THE C/B.
5. TANKS, EQUIPMENT AND PIPING CONTAINING CHEMICALS COVERED BY LOCAL, STATE AND FEDERAL EPA REGULATIONS 40CFR PARTS 100 TO 790 SHALL BE PROTECTED WITH 110% CAPACITY SECONDARY CONTAINMENTS, LINED TRENCHES, LINED AND DIKED AREAS OR DOUBLE WALLED PIPING WITH LEAK DETECTORS AND ALARMS.
6. ECCS EQUIPMENT ROOM SUMP BACKFLOW PROTECTION CHECK VALVES ARE SEISMIC CLASS A????
7. SAFETY RELATED HIGH HIGH LEVEL SIGNAL TRIPS PUMPS AND CLOSES VALVES TO TERMINATE THE RESPECTIVE RSW DIVISIONAL FLOW AND UHS SUPPLY.
8. PIPE WITH A DESIGN PRESSURE OF 2.82 MPa OR GREATER SHALL HAVE ITS MINIMUM WALL THICKNESS NO LESS THAN THAT OF A STANDARD WEIGHT PIPE. THICKER THAN STANDARD WEIGHT PIPE SHALL BE USED IF REQUIRED BY THE DESIGN PRESSURE OR OTHER REQUIREMENTS.
9. VALVES WITH A DESIGN PRESSURE OF 2.82 MPa OR GREATER SHALL BE A MINIMUM OF CLASS 300, OR OF A HIGHER CLASS IF REQUIRED BY THE DESIGN PRESSURE.

BUILDING SYMBOL

1. DW DRYWELL
2. R/B REACTOR BUILDING
3. C/B CONTROL BUILDING
4. T/B TURBINE BUILDING
5. S/B SERVICE BUILDING
6. RW/B RADWASTE BUILDING

VALVE SYMBOLS

- BALL VALVE
- BALL VALVE (CLOSED)
- BUTTERFLY VALVE
- CHECK VALVE
- GATE VALVE
- GATE VALVE (CLOSED)
- GLOBE VALVE
- PLUG VALVE
- PLUG VALVE (CLOSED)

LEGEND

1. VALVE OPERATORS ARE DEPICTED AS FOLLOWS:

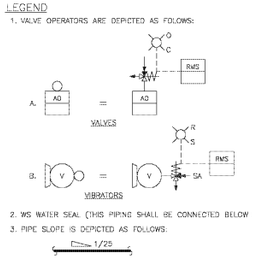

2. WS WATER SEAL (THIS PIPING SHALL BE CONNECTED BELOW LL LEVEL).
3. PIPE SLOPE IS DEPICTED AS FOLLOWS:

1/25

4. - PUMP.

REFERENCE DOCUMENTS

	MPL NO.
1. VALVE GLAND LEAKAGE, RADWASTE SYSTEM P&ID	K17-1010
2. CONDENSATE DEMINERALIZER P&ID	N27-1010
3. FUEL POOL COOLING & CLEANUP SYSTEM P&ID	G41-1010
4. CONDENSATE FILTER FACILITY P&ID	N26-1010
5. REACTOR WATER CLEANUP SYSTEM P&ID	G31-1010
6. REACTOR BUILDING COOLING WATER SYSTEM P&ID	P21-1010
7. STATION SERVICE AIR SYSTEM P&ID	P51-1010
8. INSTRUMENT AIR SYSTEM P&ID	P52-1010
9. MAKEUP WATER CONDENSATE SYSTEM P&ID	F13-1010
10. AREA RADIATION MONITORING SYSTEM P&ID	D21-1010
11. ATMOSPHERIC CONTROL SYSTEM P&ID	T31-1010
12. HVAC SYSTEM P&ID	U41-1010
13. SAMPLING SYSTEM P&ID	P81-1010
14. MAKEUP WATER PURIFIED SYSTEM P&ID	F11-1010
15. RESIDUAL HEAT REMOVAL SYSTEM P&ID	E11-1010
16. HEATING STEAM AND CONDENSATE RETURN SYSTEM P&ID	P61-1010
17. PROCESS RADIATION MONOTORING SYSTEM P&ID	D11-1010
18. REACTOR SERVICE WATER SYSTEM P&ID	P41-1010
19. REACTOR BUILDING COOLING WATER/REACTOR SERVICE WATER SYSTEM IBD	P21-1030

FIGURE 11.2-2 RADWASTE SYSTEM (SHEET 1 OF 36)

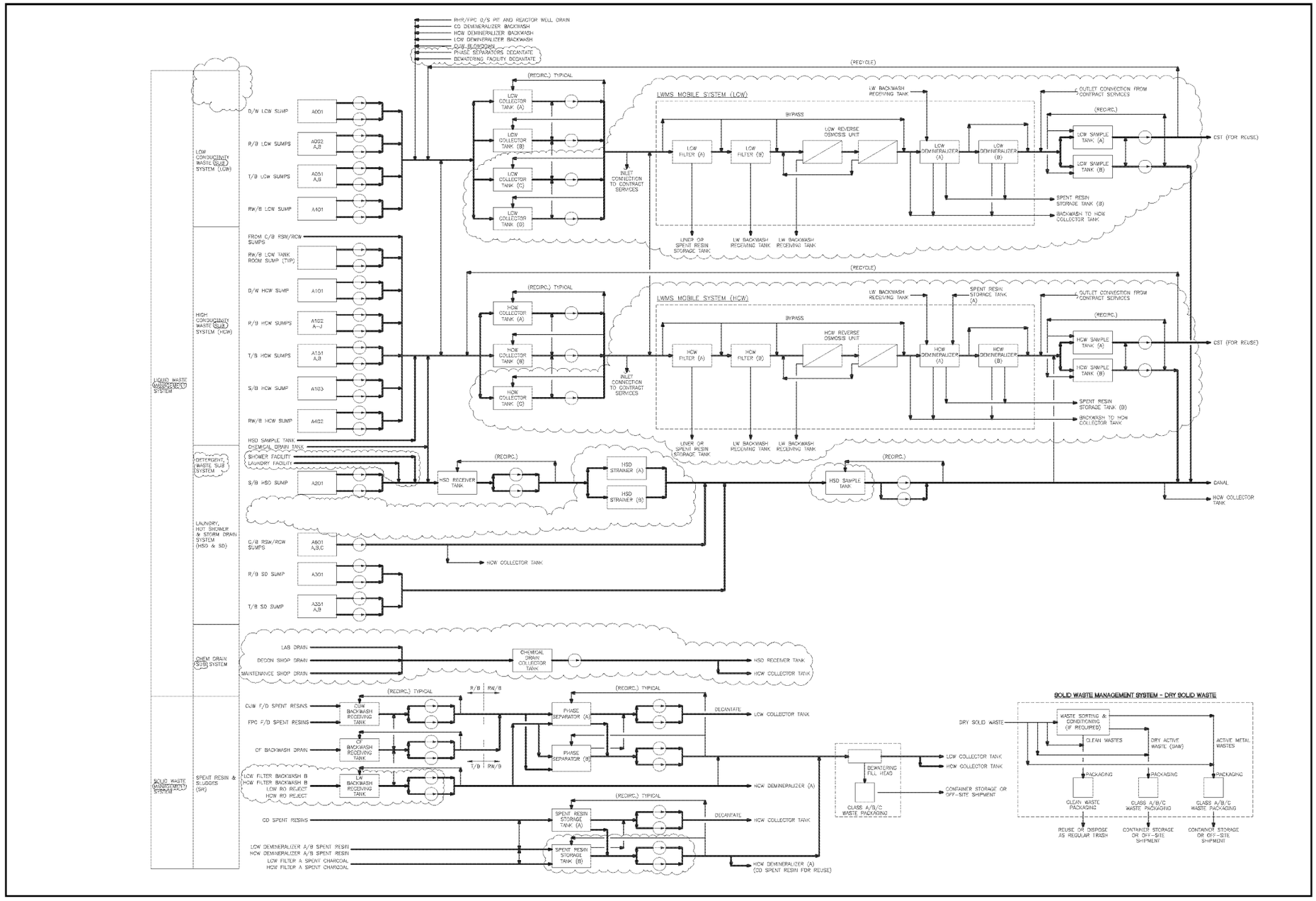

FIGURE 11.2-2 RADWASTE SYSTEM (SHEET 2 OF 36)

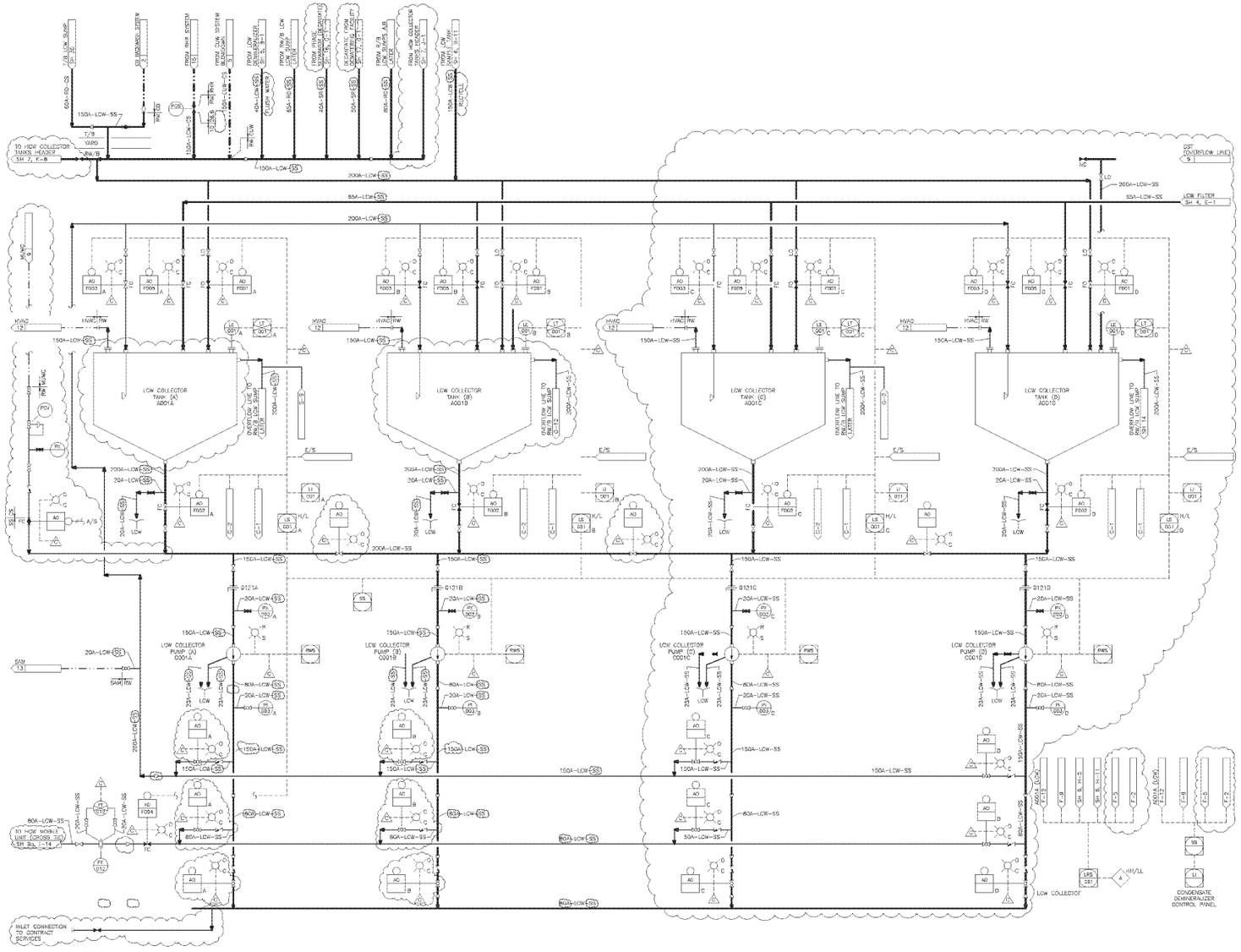

FIGURE 11.2-2 RADWASTE SYSTEM (SHEET 3 OF 36)

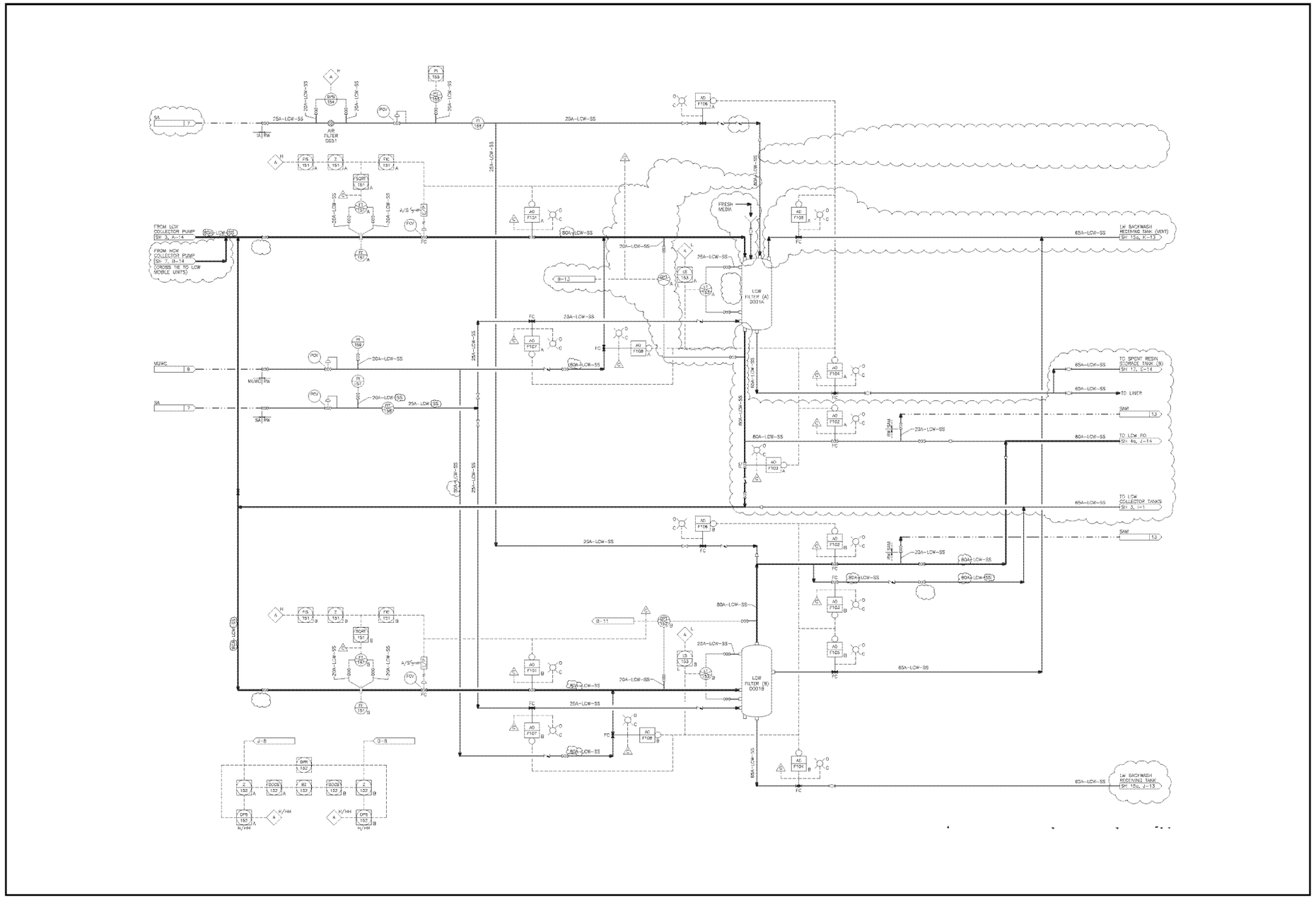

FIGURE 11.2-2 RADWASTE SYSTEM (SHEET 4 OF 36)

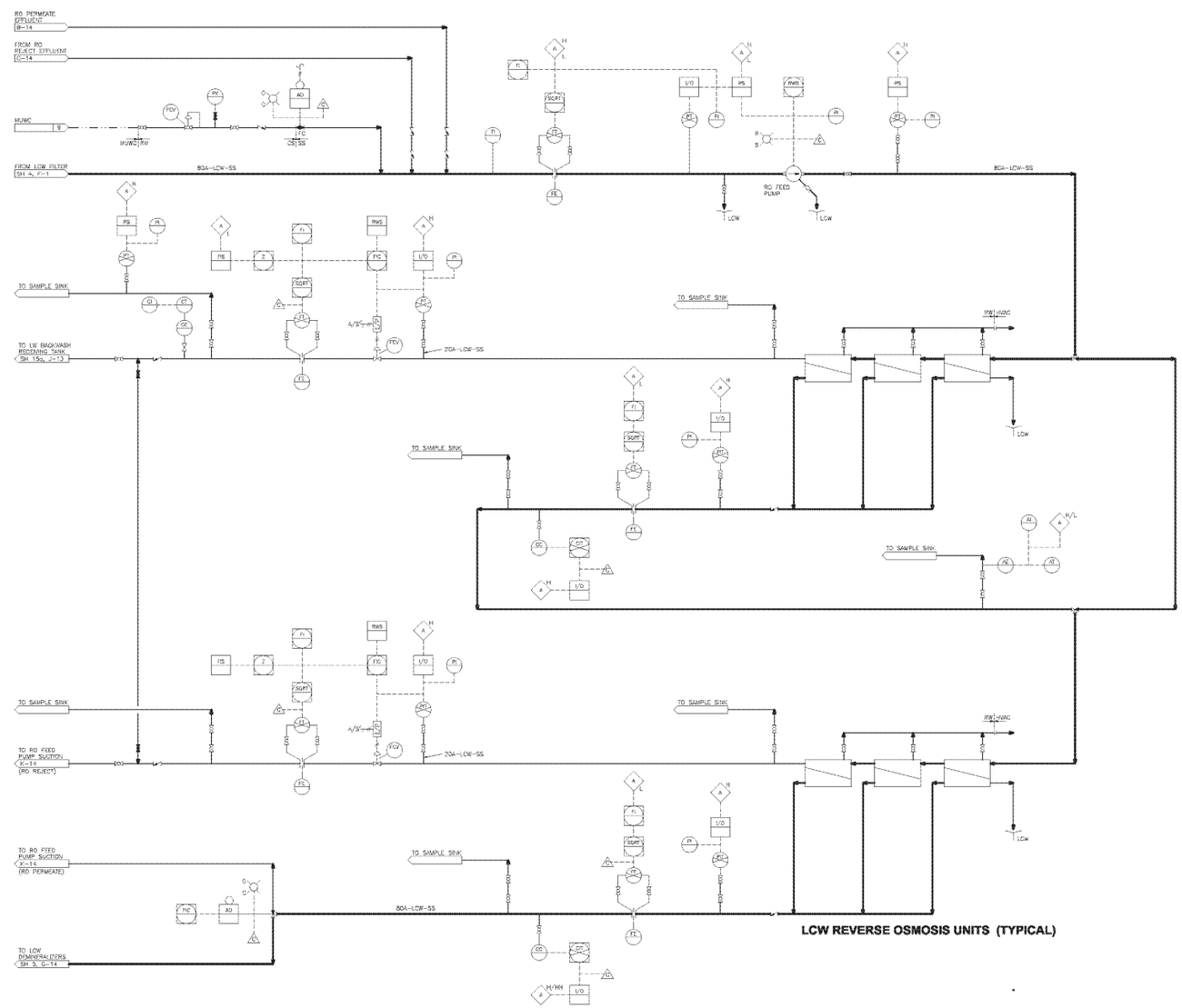

FIGURE 11.2-2 RADWASTE SYSTEM (SHEET 4a OF 36)

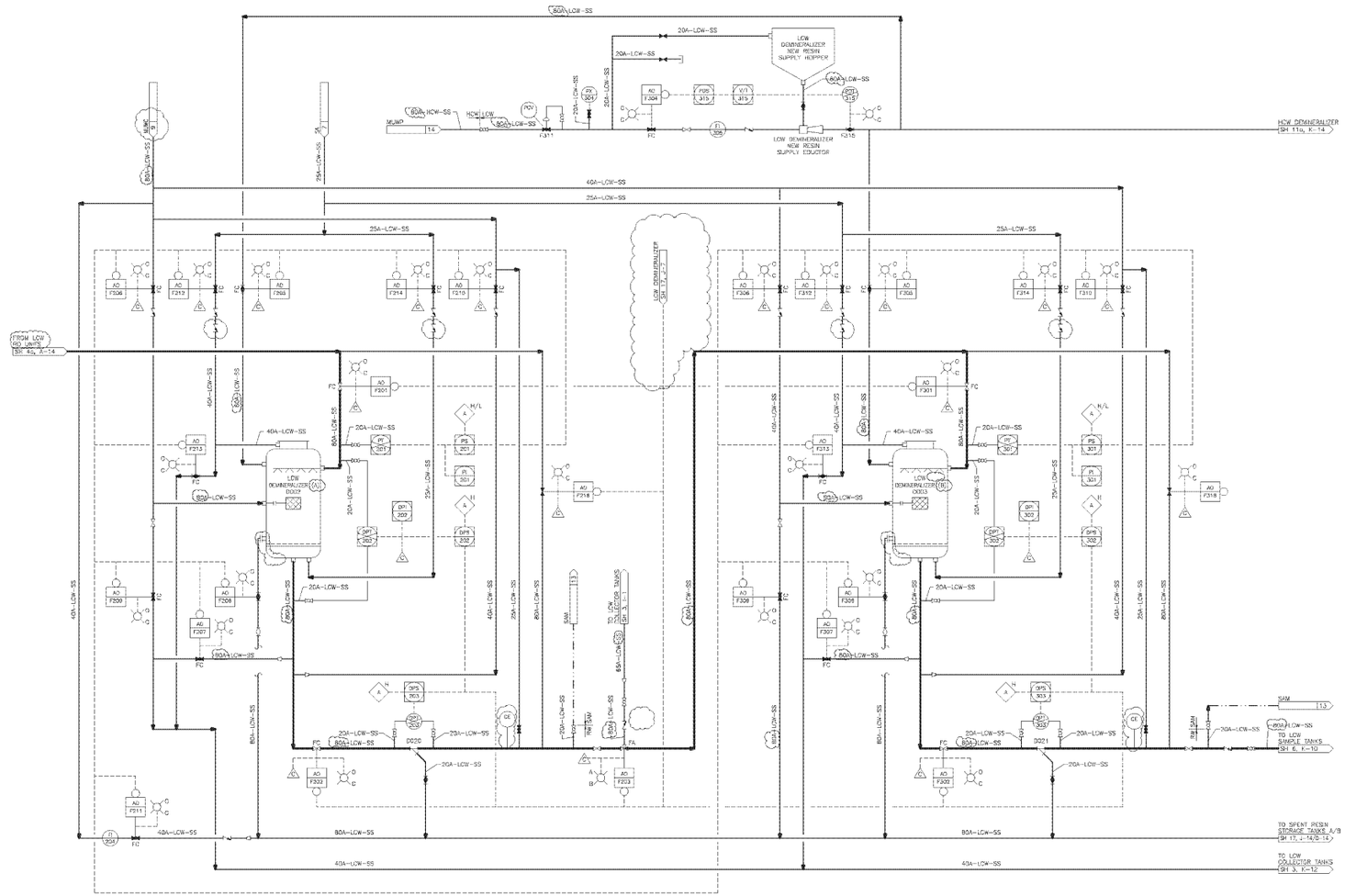

FIGURE 11.2-2 RADWASTE SYSTEM (SHEET 5 OF 36)

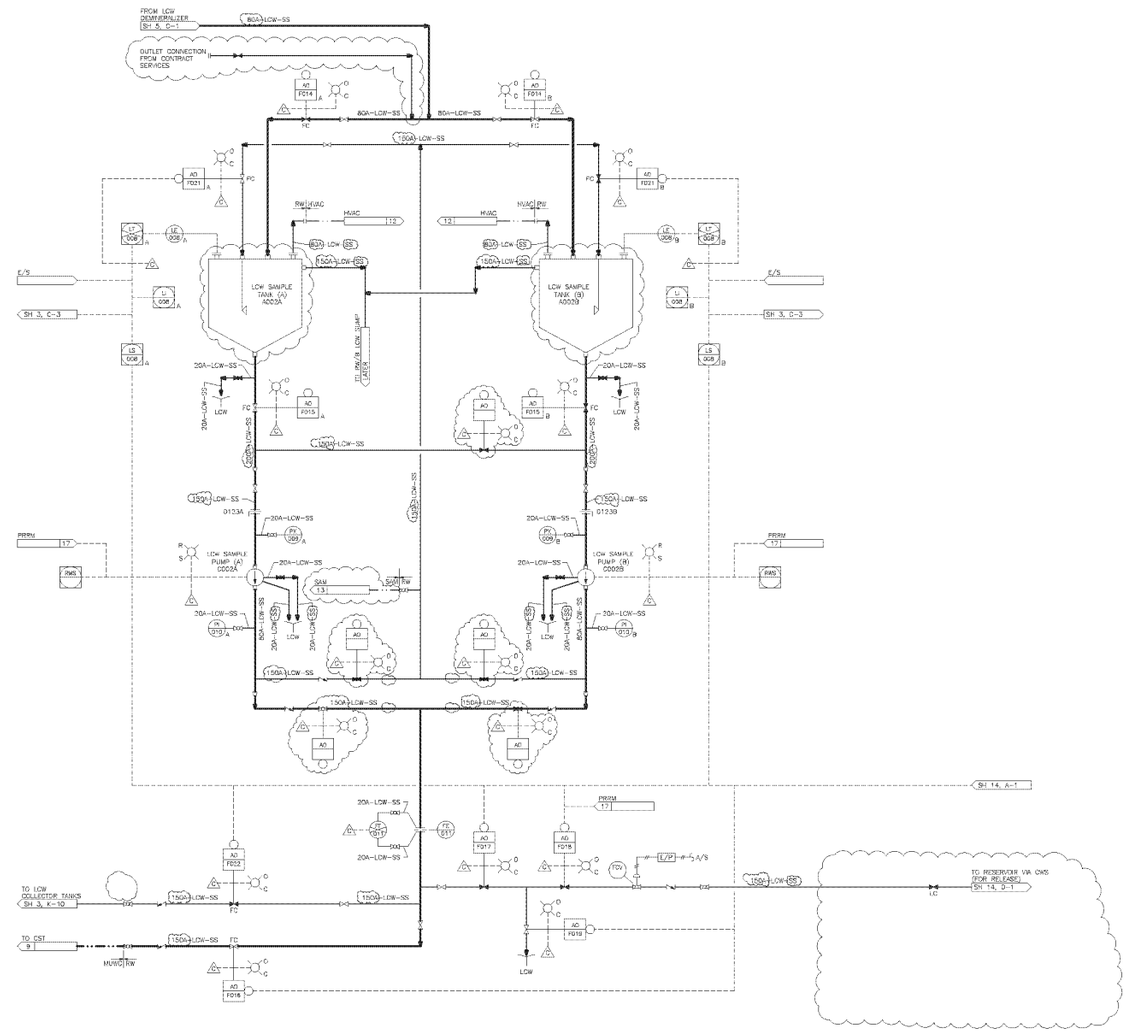

FIGURE 11.2-2 RADWASTE SYSTEM (SHEET 6 OF 36)

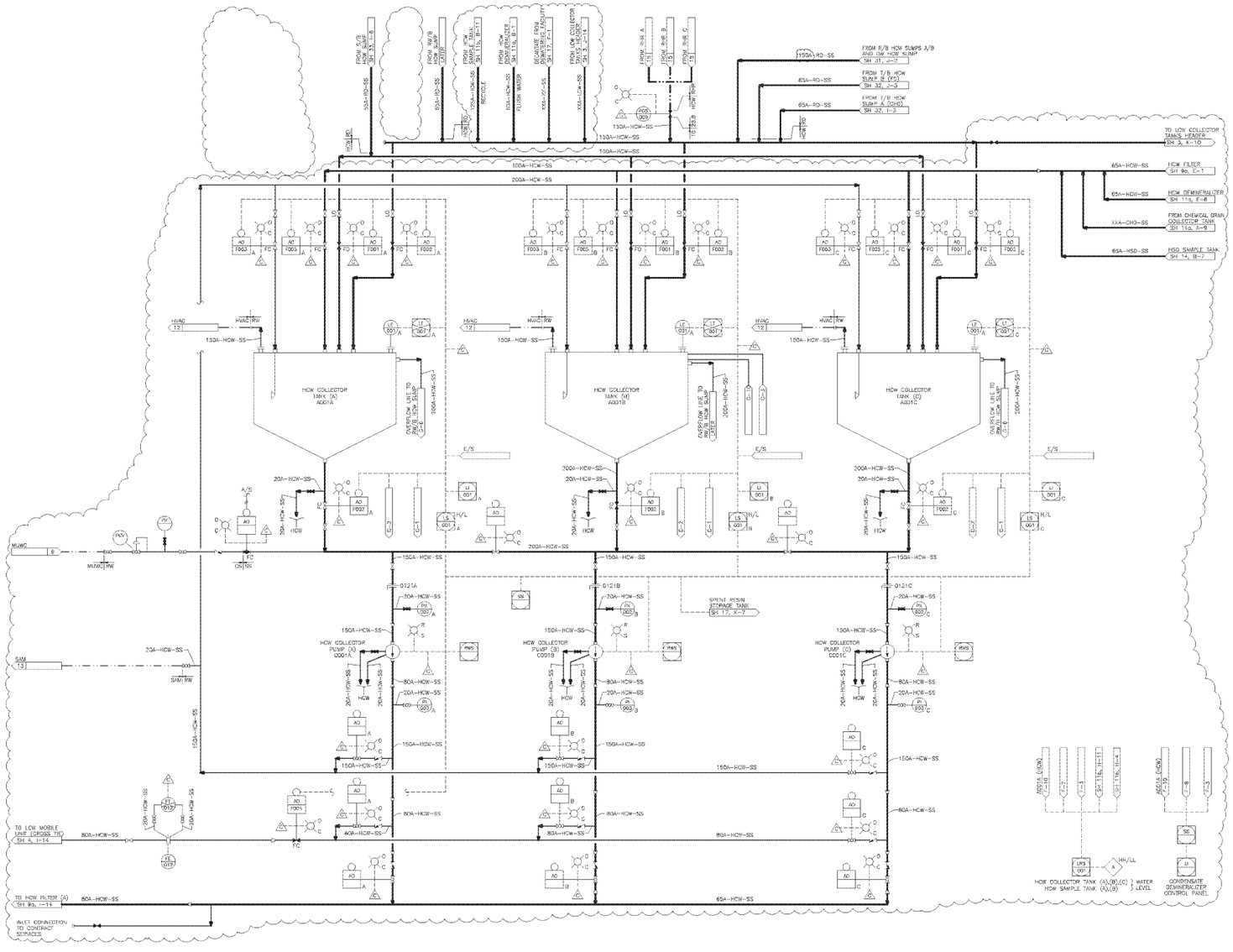

FIGURE 11.2-2 RADWASTE SYSTEM (SHEET 7 OF 36)

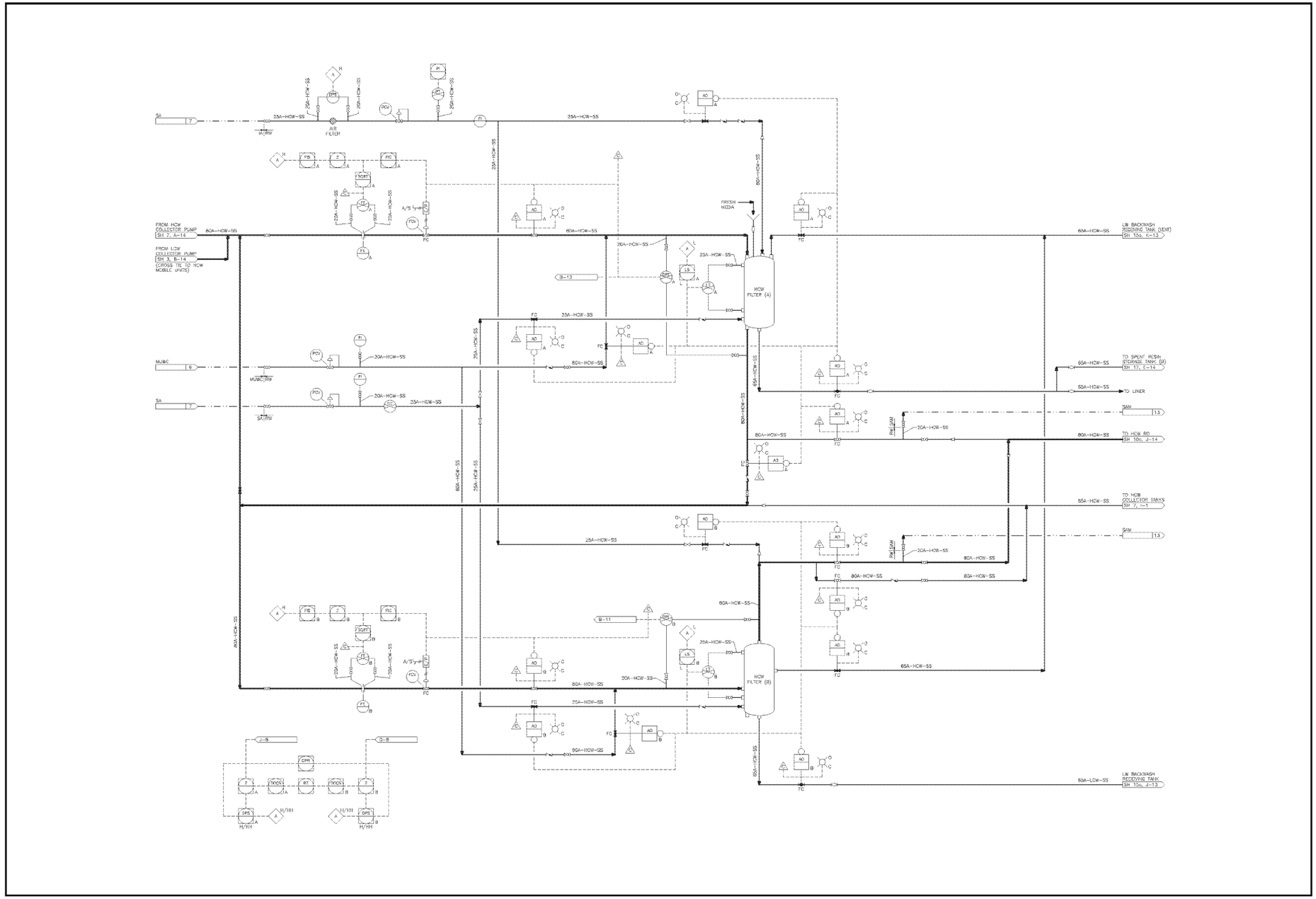

FIGURE 11.2-2 RADWASTE SYSTEM (SHEET 9a OF 36)

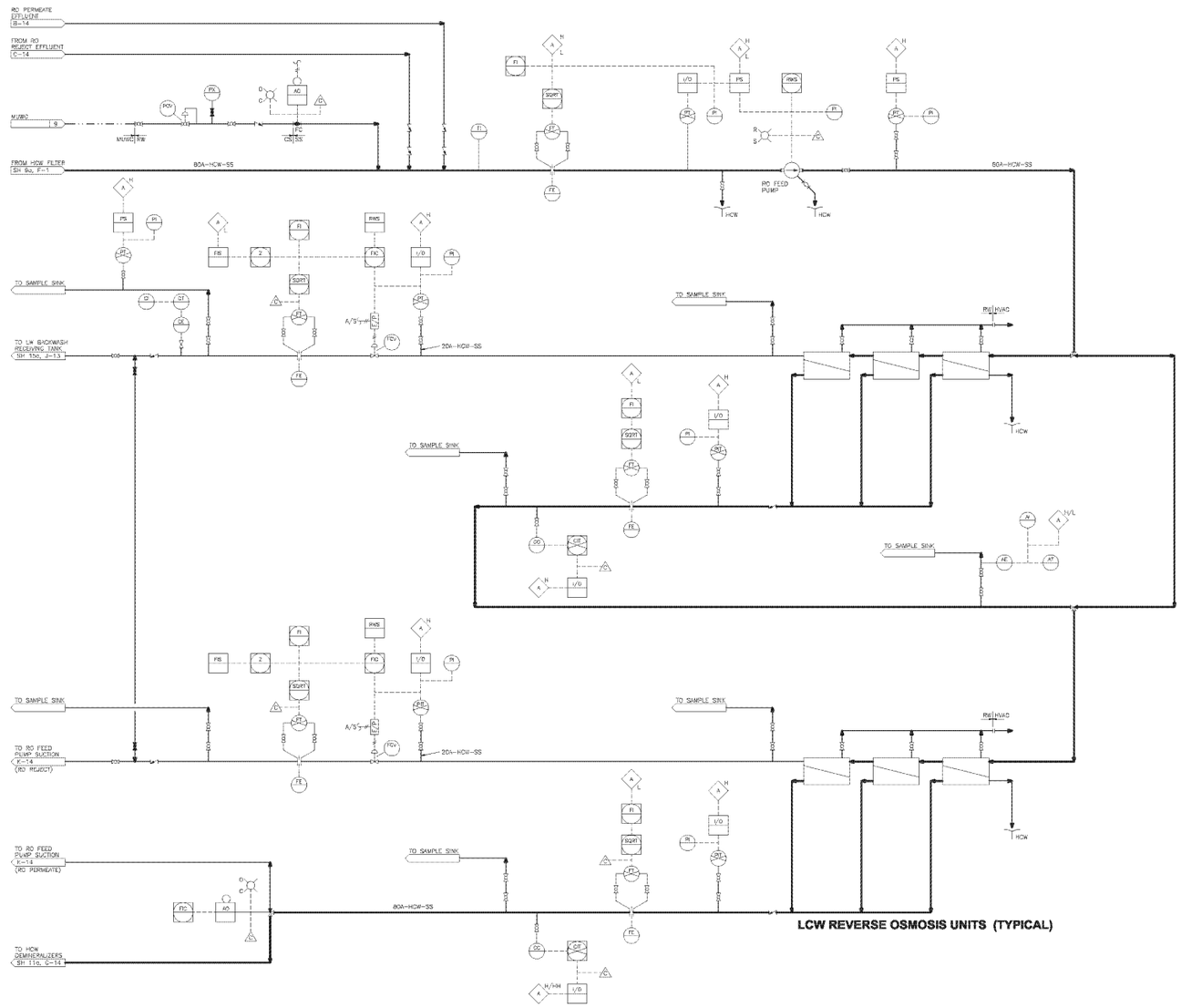

FIGURE 11.2-2 RADWASTE SYSTEM (SHEET 10a OF 36)

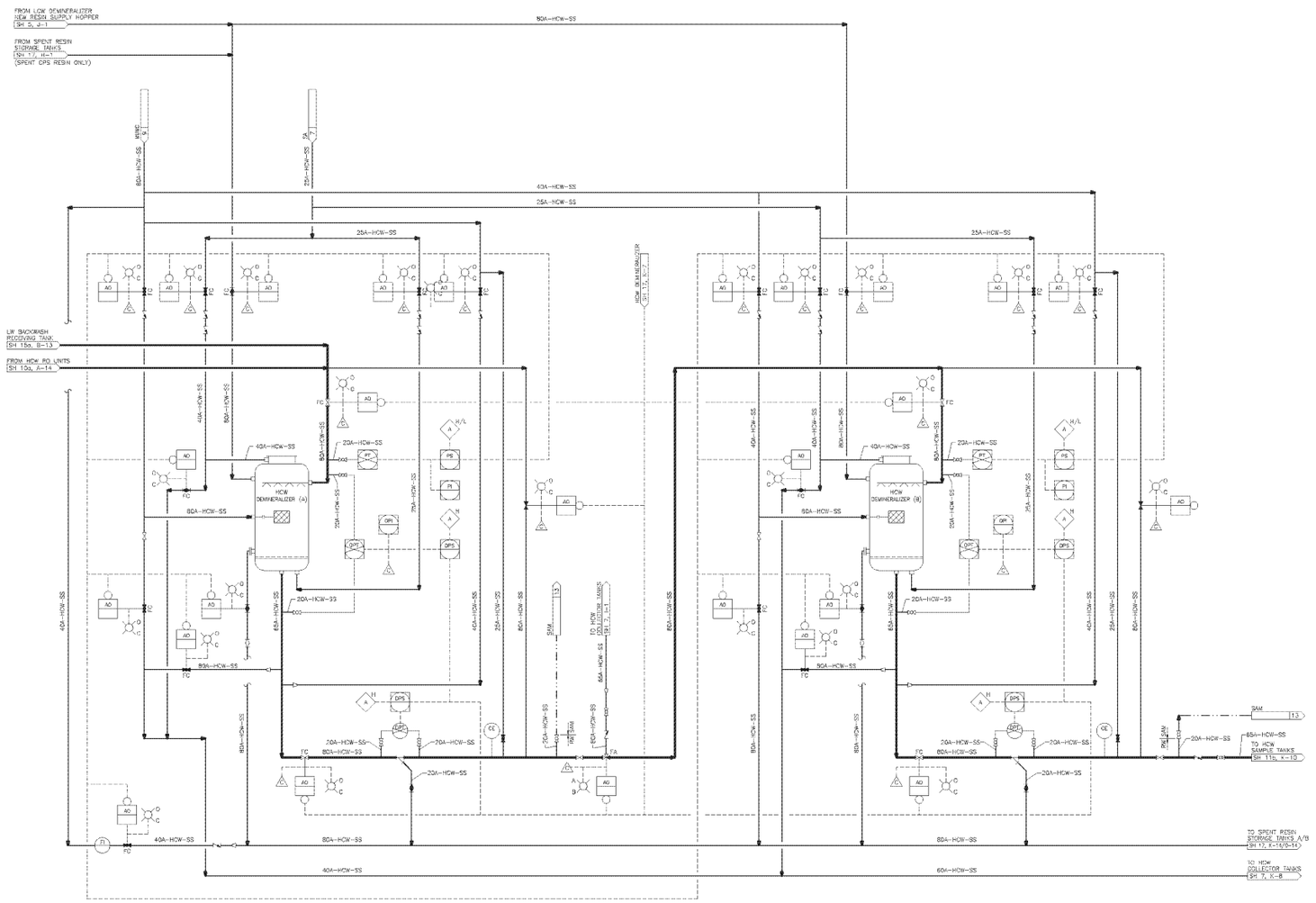

FIGURE 11.2-2 RADWASTE SYSTEM (SHEET 11a OF 36)

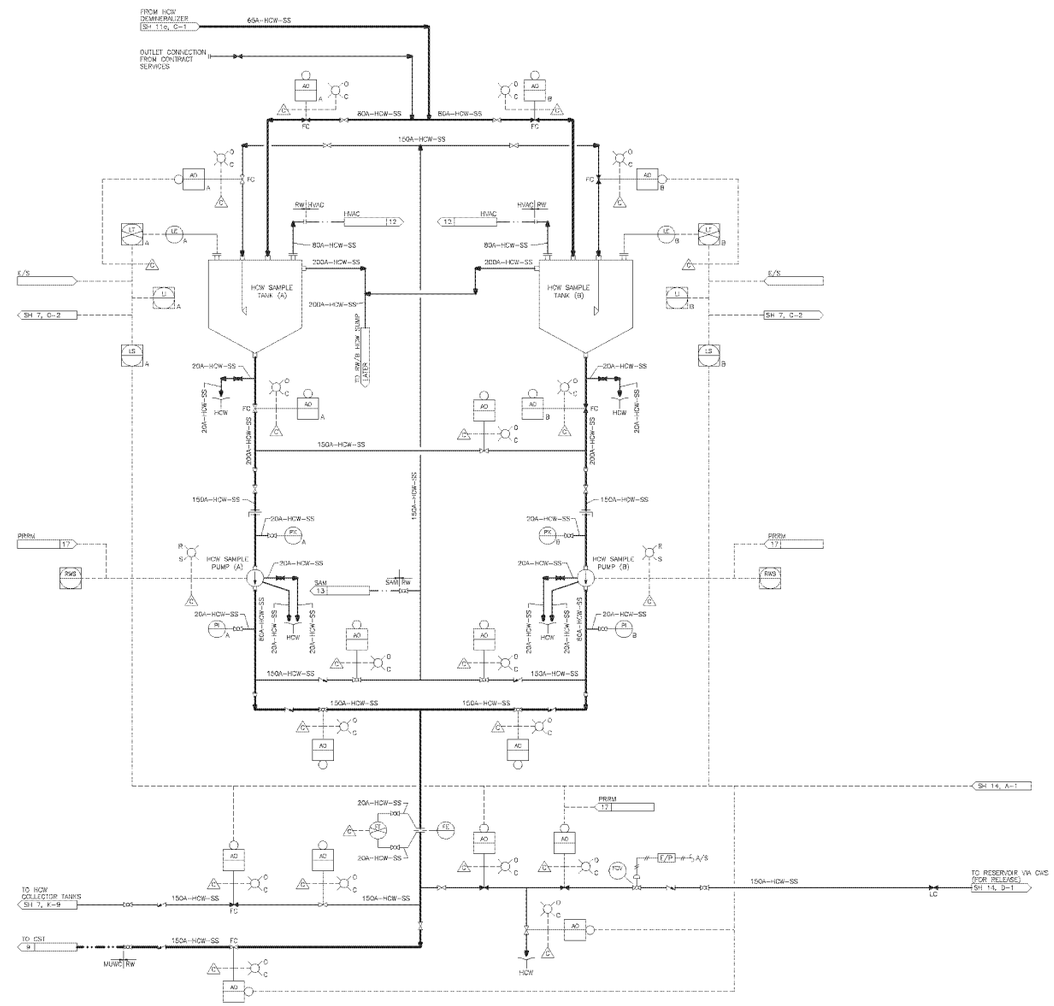

FIGURE 11.2-2 RADWASTE SYSTEM (SHEET 11b OF 36)

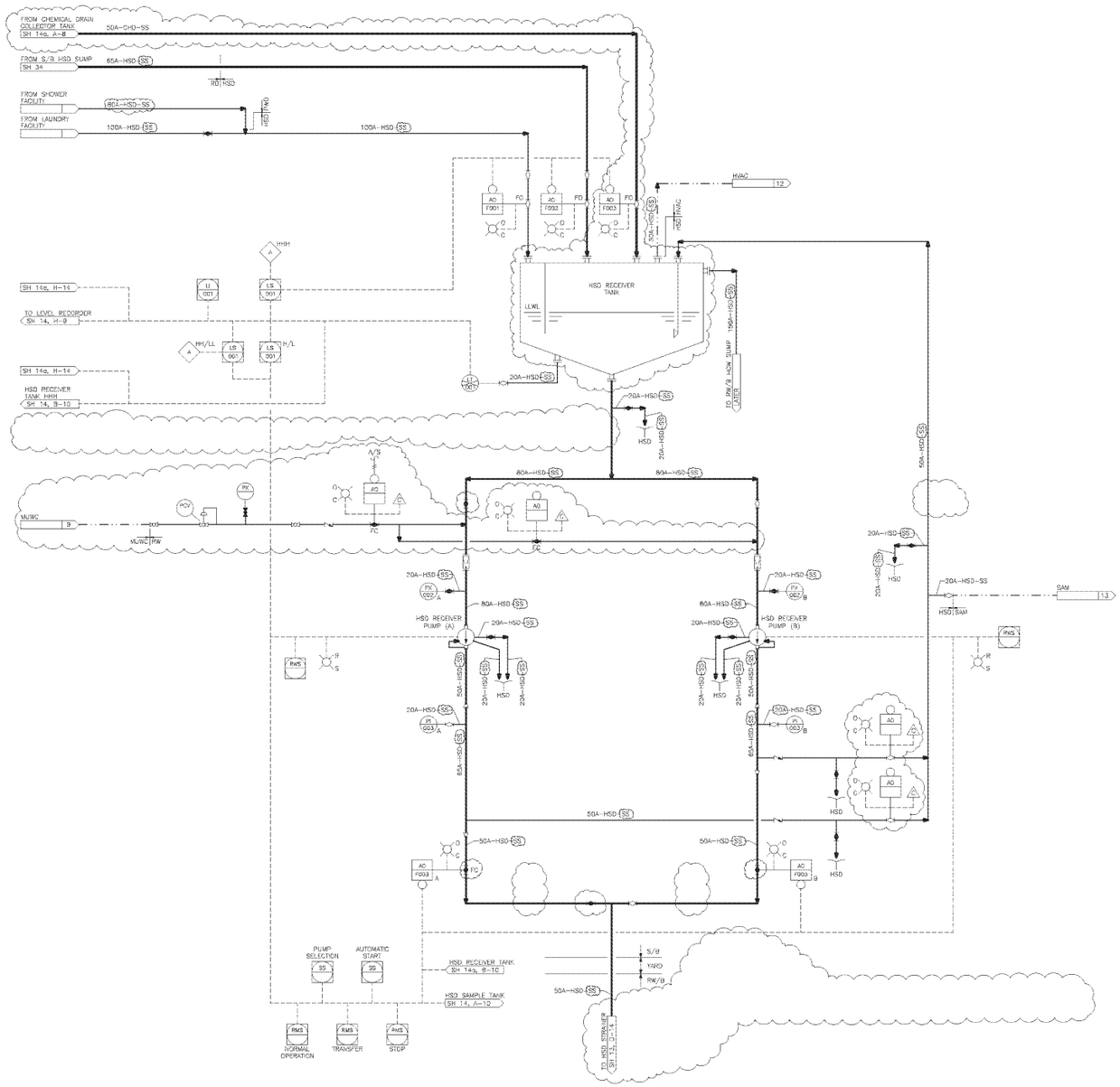

FIGURE 11.2-2 RADWASTE SYSTEM (SHEET 12 OF 36)

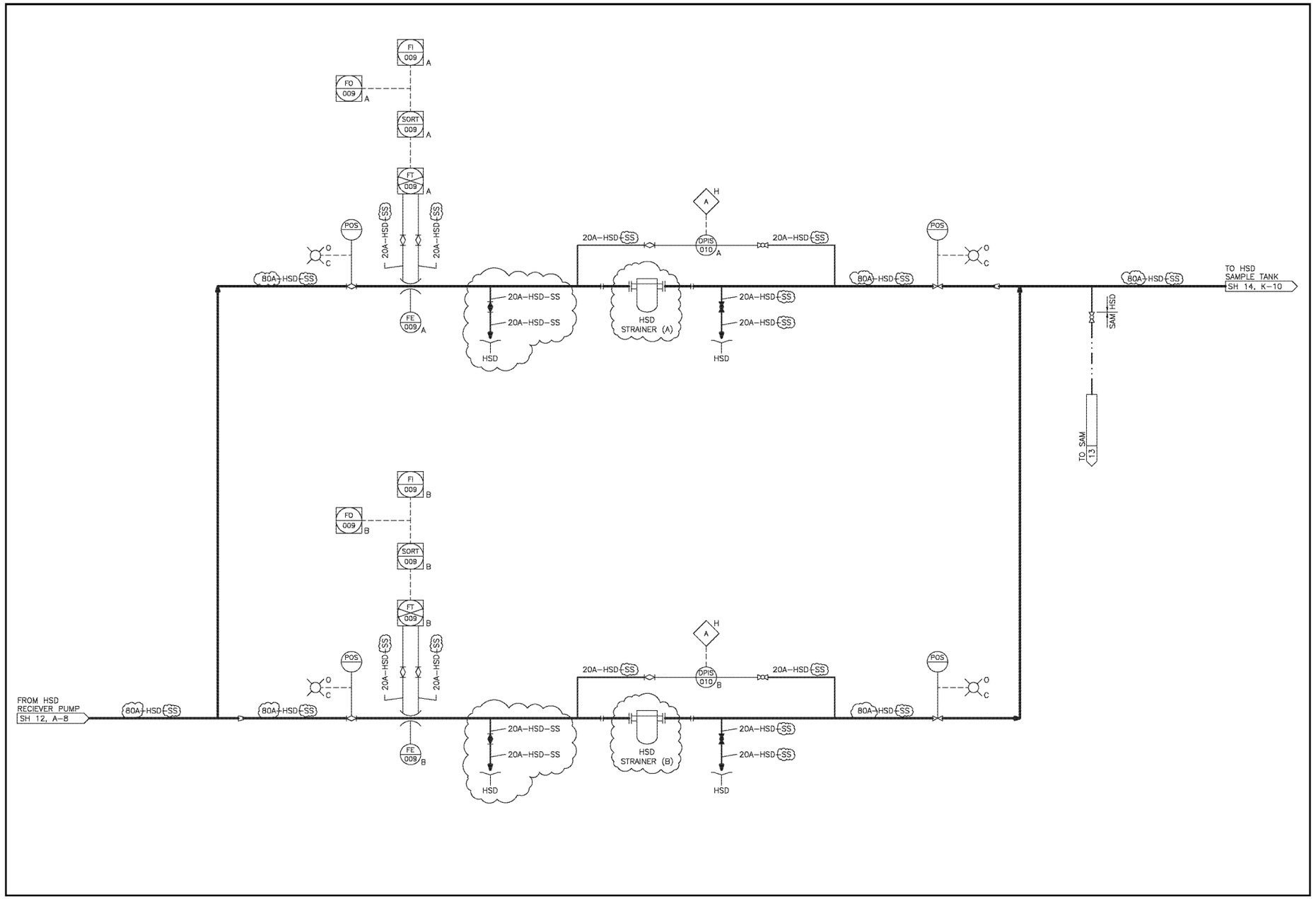

FIGURE 11.2-2 RADWASTE SYSTEM (SHEET 13 OF 36)

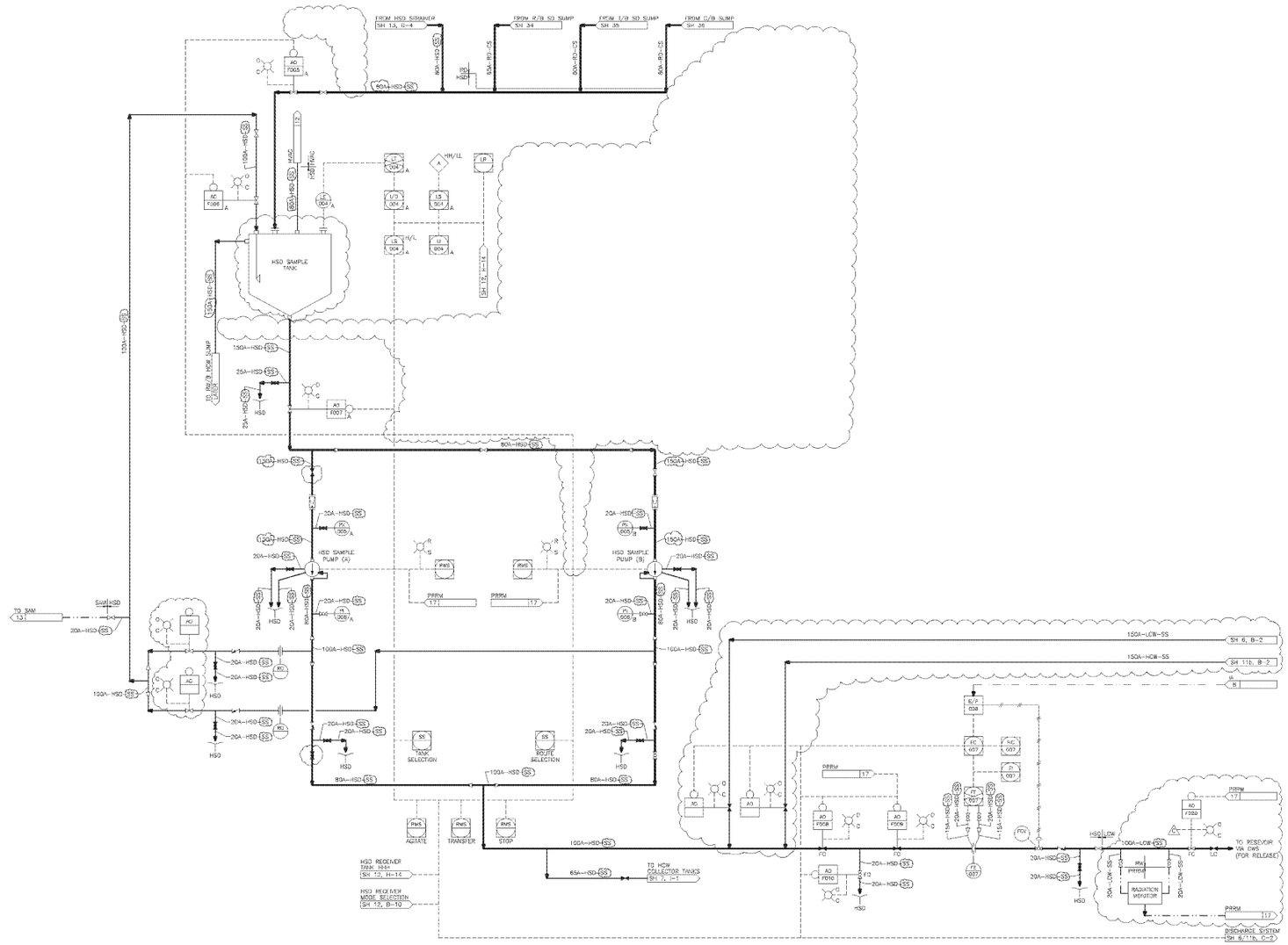

FIGURE 11.2-2 RADWASTE SYSTEM (SHEET 14 OF 36)

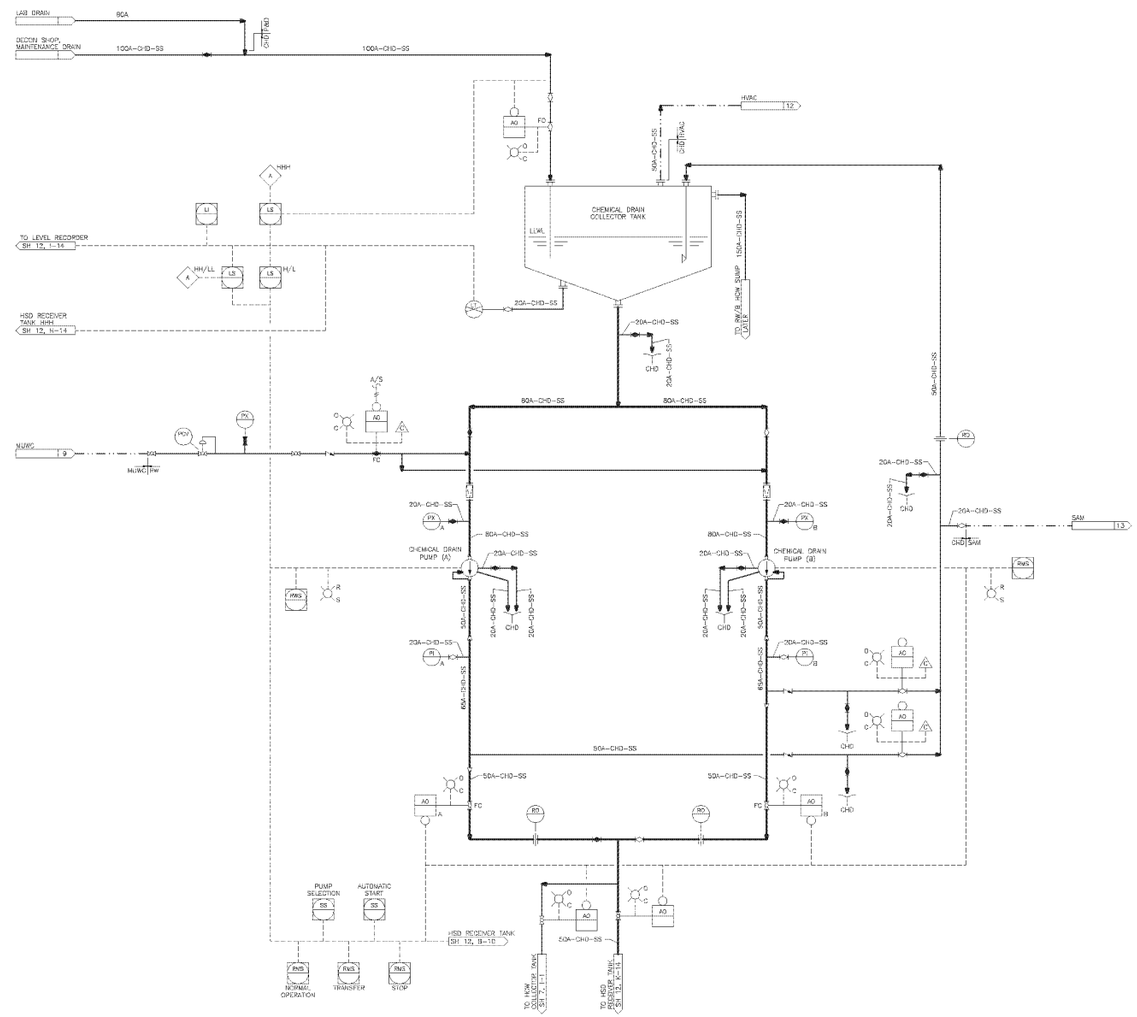

FIGURE 11.2-2 RADWASTE SYSTEM (SHEET 14a OF 36)

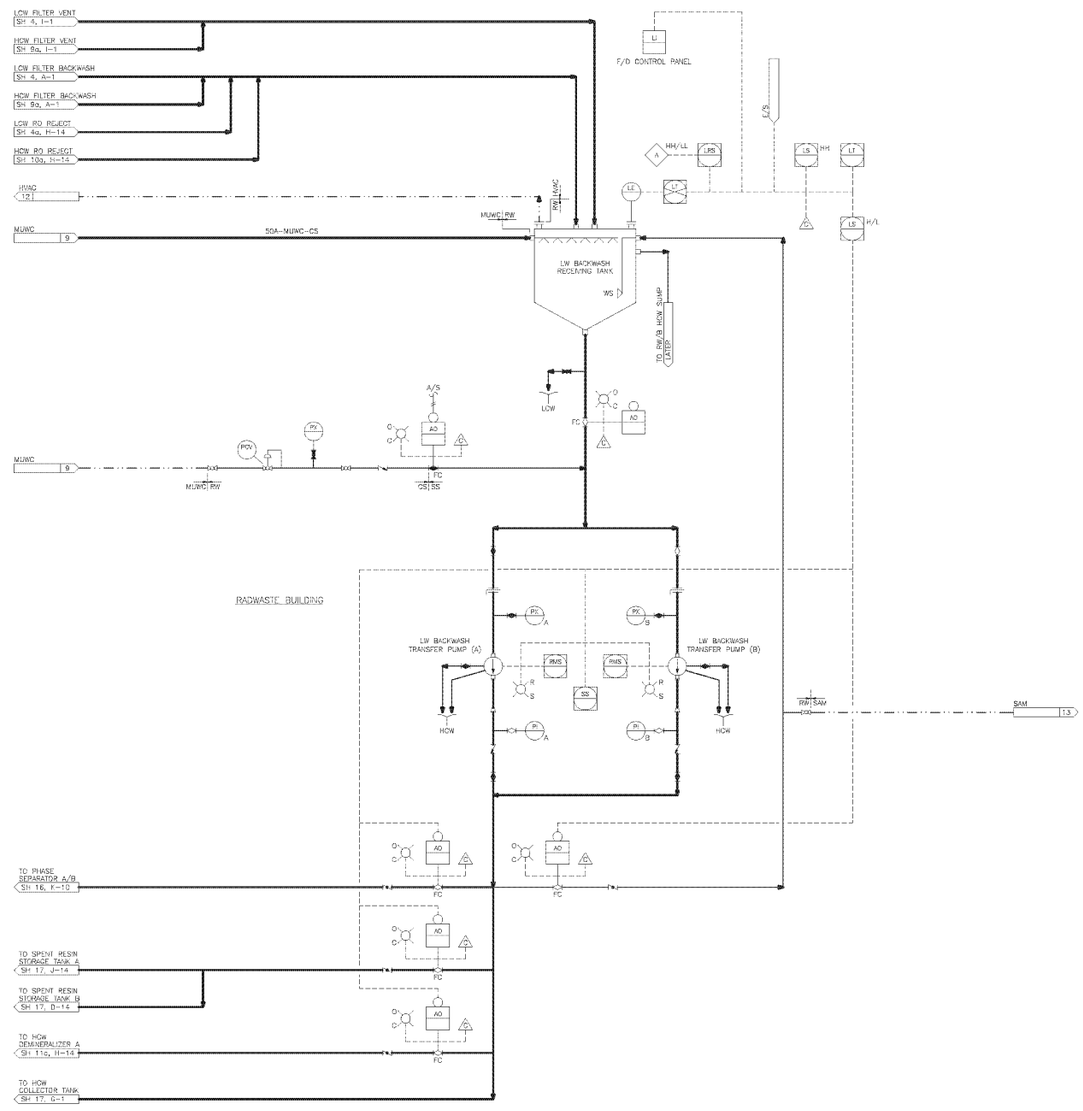

FIGURE 11.2-2 RADWASTE SYSTEM (SHEET 15a OF 36)

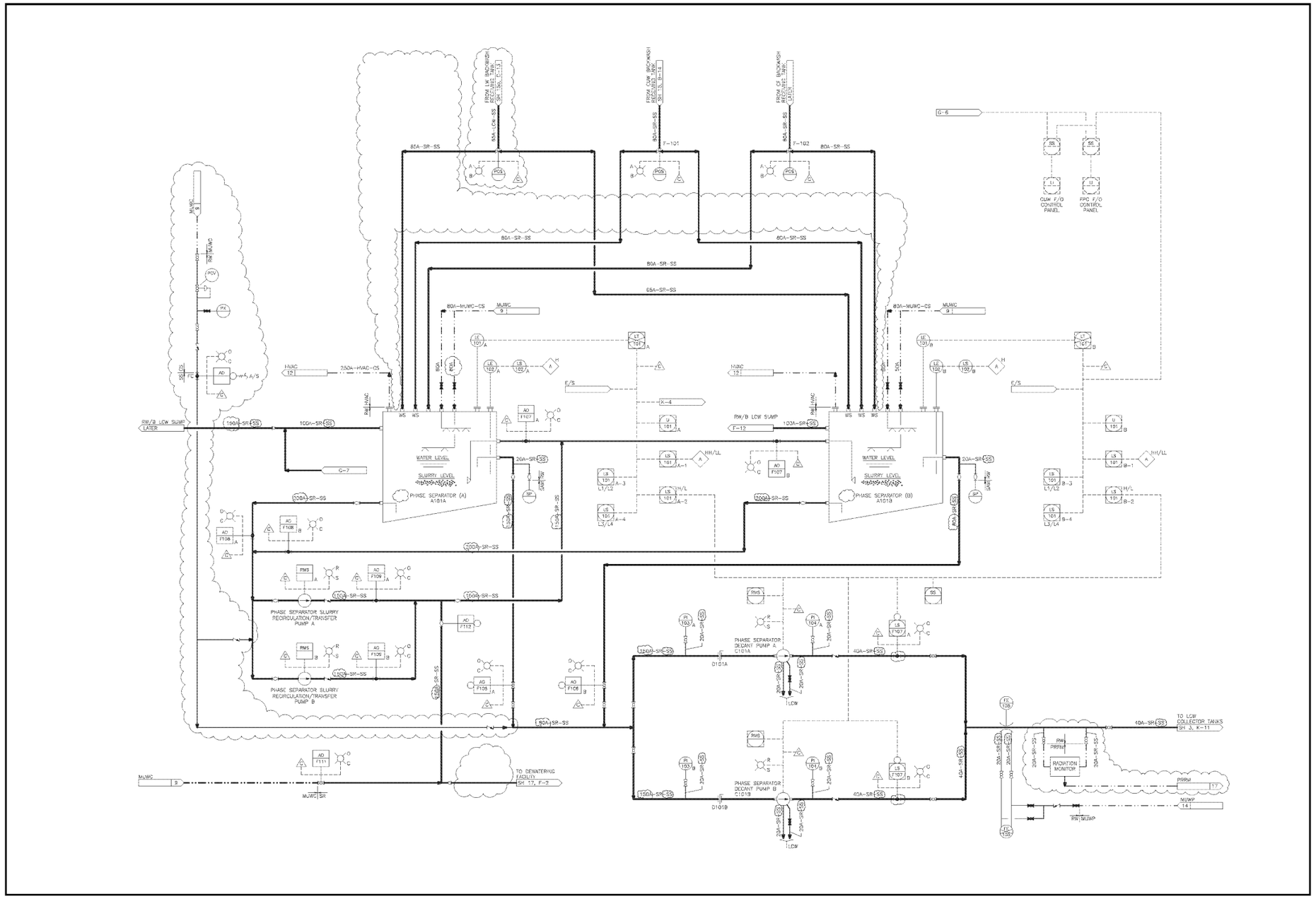

FIGURE 11.2-2 RADWASTE SYSTEM (SHEET 16 OF 36)

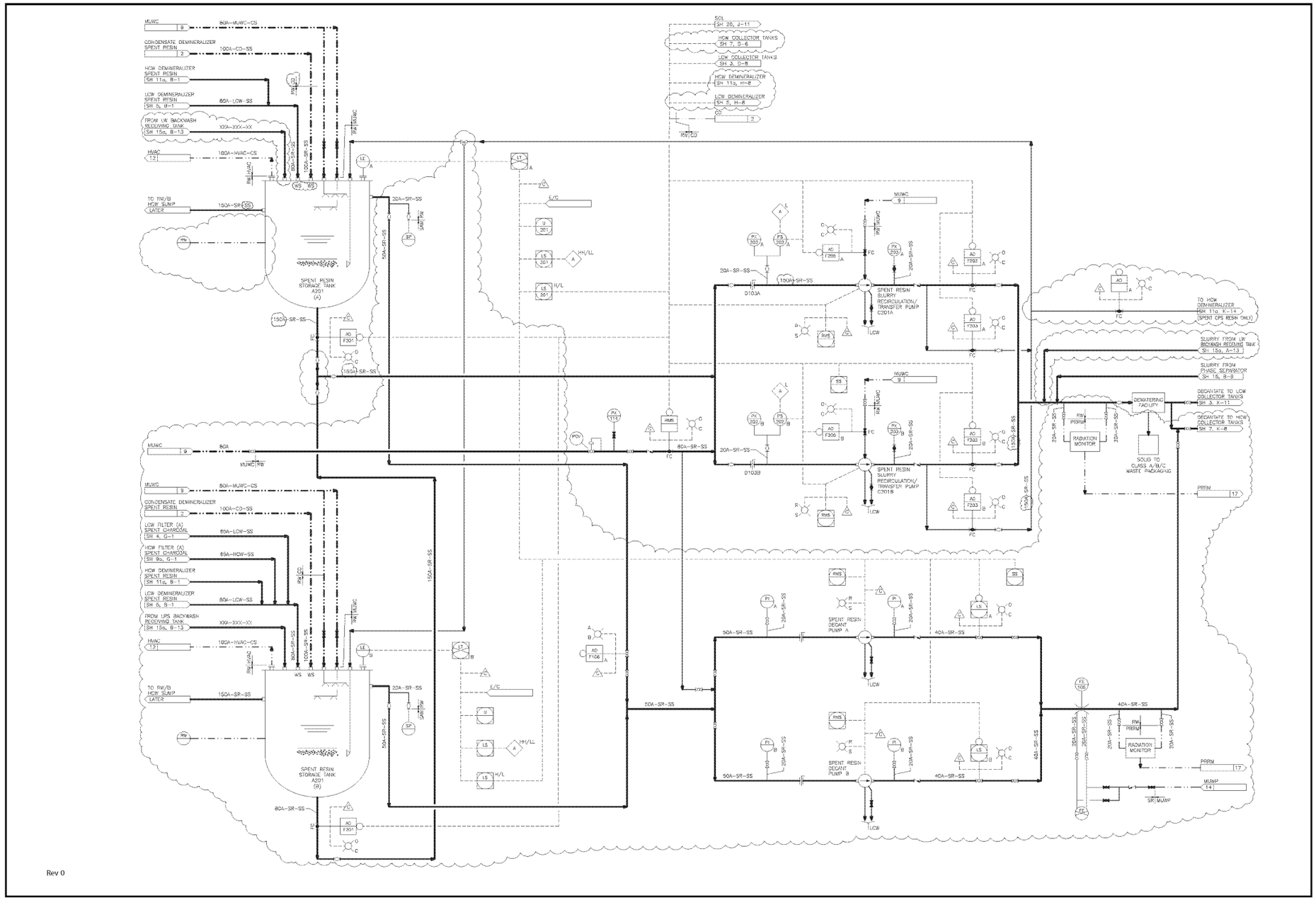

Rev 0

FIGURE 11.2-2 RADWASTE SYSTEM (SHEET 17 OF 36)

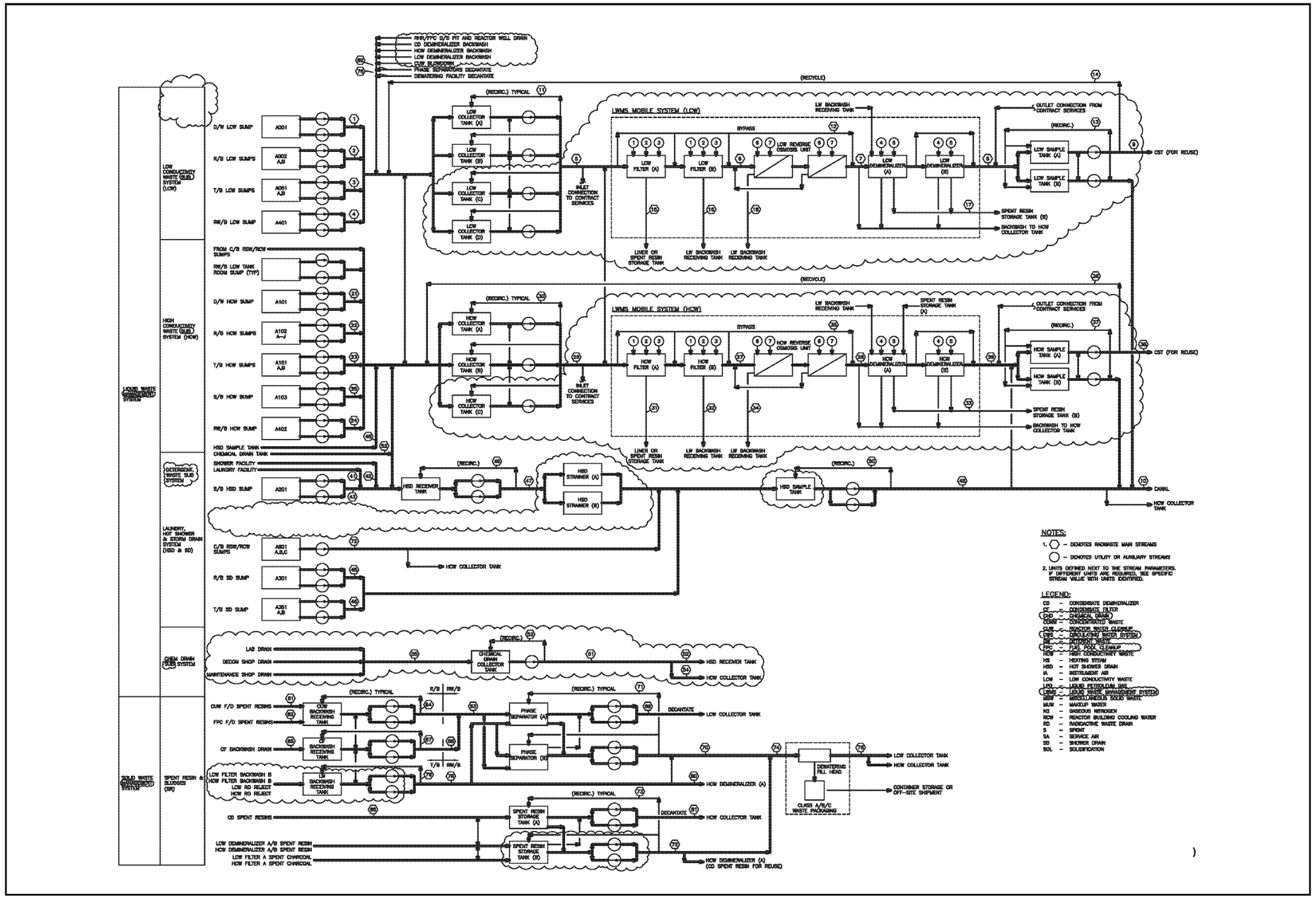

FIGURE 11.2-1 RADWASTE SYSTEM (SHEET 1 OF 2)

Stream No. ●	1	2	3	4	5	6	7	8	9	10	11	12	13	14	15	16	17	18	69	76
Sub System	LCW - RD	LCW - RD	LCW - RD	LCW - RD	LCW	LCW	LCW	LCW	LCW	LCW	LCW	LCW	LCW	LCW	LCW	LCW	LCW - Resin	LCW	LCW - SR	LCW - SR
Liquid/Slurry	Liquid	Liquid	Liquid	Liquid	Liquid	Liquid	Liquid	Liquid	Liquid	Liquid	Liquid	Liquid	Liquid	Liquid	Slurry	Slurry	Slurry	Slurry	Liquid	Liquid
Normal Batch/day	4	8	8	2	--	--	--	--	--	--	--	--	--	--	--	1/30	1/385	--	--	--
Maximum Batch/day	44	8	8	2	--	--	--	--	--	--	--	--	--	--		1	1		--	--
Batch Volume m^3 (a)	2.5	2.5	2.5	2.5	140	140	140	140	140	--	--	--	--	--	min	0.25	14.4	min	80	--
Normal Volume m^3/day	10	15	15	5	55	55	55	55	55	47.8	--	--	--	--	min	0.25	14.4	min	--	--
Normal Average Volume m^3/day	10	15	15	5	80	80	80	80	80	--	--	--	--	--	--	--	--	--	--	--
Maximum Volume m^3/day	110	15	15	5	815	815	815	815	815	145.3	--	--	--	--	min	0.25	14.4	min	--	--
Flow m^3/hour	10	10	10	10	34	34	34	34	150	40	88	34	150	150	--	--	--	--	10	10
Temperature °C	88	88	88	88	88	88	88	88	88	88	88	88	88	88	88	88	88	88	88	88
Pressure kg/cm^2	10	10	10	10	10	10	10	10	10	10	10	10	10	10	10	10	10	10	10	10
Conductivity μS/cm	~5	~5	~5	~5	~5	~5	~5	<1	<1	<1	~5	>1	<1	>1	--	--	--	--	--	--
Undissolved Solid ppm	~2	~2	~2	~2	~2	<0.1	<0.1	<0.1	<0.1	<0.1	~2	<0.1	<0.1	<0.1	18 wt%	~1700	18 wt%	~500	--	--

Stream No. ●	21	22	23	24	25	26	27	28	29	30	31	32	33	34	35	36	37	38
Sub System	HCW - RD	HCW - RD	HCW - RD	HCW - RD	HCW - RD	HCW	HCW	HCW	HCW	HCW	HCW	HCW	HCW - Resin	HCW	HCW	HCW	HCW	HCW
Liquid/Slurry	Liquid	Liquid	Liquid	Liquid	Liquid	Liquid	Liquid	Liquid	Liquid	Liquid	Slurry	Slurry	Slurry	Slurry	Liquid	Liquid	Liquid	Liquid
Normal Batch/day	--	2	2	1.2	0.8	--	--	--	--	--	1/385	12/385	1/385	12/385	--	--	--	--
Maximum Batch/day	--	22	2	1.2	0.8	--	--	--	--	--	--	--	--	--	--	--	--	--
Batch Volume m^3 (a)	2.5	2.5	2.5	2.5	2.5	140	140	140	140	140	1.4	1	14.4	12	--	--	--	140
Normal Volume m^3/day	--	5	5	3	2	15	15	15	15	--	1.4	1	14.4	12	--	--	--	15
Normal Average Volume m^3/day	--	--	--	--	--	--	--	--	--	--	--	--	--	--	--	--	--	--
Maximum Volume m^3/day	--	55	5	3	2	83	83	83	83	--	1.4	1	14.4	12	--	--	--	83
Flow m^3/hour	10	10	10	10	10	34	34	34	34	88	--	--	--	--	34	150	150	150
Temperature °C	88	88	88	88	88	88	88	88	88	88	88	88	88	88	88	88	88	88
Pressure kg/cm^2	10	10	10	10	10	10	10	10	10	10	10	10	10	10	10	10	10	10
Conductivity μS/cm	~5	~1000	~1000	~10000	~10000	1000~10000	<10	<10	<1	1000~10000	--	--	--	--	1000~10000	1000~10000	<1	<1
Undissolved Solid ppm	~2	0.05 wt%	0.05 wt%	0.05 wt%	1.25 wt%	0.05~2.00 wt%	<0.5	<0.5	<0.1	0.05~2.00 wt%	18 wt%	~1700	18 wt%	~500	0.05~2.00 wt%	0.05~2.00 wt%	<0.1	<0.1

Stream No. ●	41	42	43	44	45	46	47	48	49	50
Sub System	DW	DW	DW	Not used	DW	DW	DW	DW	DW	DW
Liquid/Slurry	Liquid	Liquid	Liquid	--	Liquid	Liquid	Liquid	Liquid	Liquid	Liquid
Normal Batch/day	--	--	--	--	8	8	--	--	--	--
Maximum Batch/day	--	--	--	--	12	12	--	--	--	--
Batch Volume m^3	--	--	2.5	--	2.5	2.5	30	30	30	--
Normal Volume m^3/day	7.5	3.8	--	--	20	20	4	4	--	--
Normal Average Volume m^3/day	--	--	--	--	--	--	--	--	--	--
Maximum Volume m^3/day	32.5	18.5	--	--	30	30	12	12	--	--
Flow m^3/hour	--	10	10	--	10	20	34	80	88	80
Temperature °C	88	88	88	--	88	88	88	88	88	88
Pressure kg/cm^2	10	10	10	--	10	10	10	10	10	10
Conductivity μS/cm	--	--	--	--	--	--	--	--	--	--
Undissolved Solid ppm	--	--	--	--	--	--	--	--	--	--

Stream No. ●	51	52	53	54	55
Sub System	CHD	CHD	CHD	CHD	CHD
Liquid/Slurry	Liquid	Liquid	Liquid	Liquid	Liquid
Normal Batch/day	--	--	--	--	--
Maximum Batch/day	--	--	--	--	--
Batch Volume m^3	4	4	4	4	4
Normal Volume m^3/day	2	2	2	2	2
Normal Average Volume m^3/day	--	--	--	--	--
Maximum Volume m^3/day	2	2	2	2	2
Flow m^3/hour	4	4	10	4	4
Temperature °C	88	88	88	88	88
Pressure kg/cm^2	10	10	10	10	10
Conductivity μS/cm	--	--	--	--	--
Undissolved Solid ppm	--	--	--	--	--

Stream No. ●	61	62	63	64	65	66	67	68	69	70	71	72	73	74	75	76	77	78	79	80	81
Sub System	SR	SR	SR	SR	SR	SR	SR	SR	LCW - SR	SR	SR	SR	SR	SR	Not used	LCW - SR	Not used	SR	SR	SR	SR
Liquid/Slurry	Slurry	Slurry	Slurry	Slurry	Slurry	Slurry	Slurry	Slurry	Liquid	Liquid	Slurry	Slurry	Slurry	Slurry	--	Liquid	--	Slurry	Slurry	Slurry	Liquid
Normal Batch/day	0.08	0.02	0.08	--	0.088	0.088	--	8/3 yr	--	--	--	--	--	--	--	--	--	--	--	--	--
Maximum Batch/day	2	1	1	--	3	3	--	2	--	--	--	--	--	--	--	--	--	--	--	--	--
Batch Volume m^3	15	20	30/35	--	35	35	--	30	80	--	--	--	--	--	--	--	--	--	--	--	--
Normal Volume m^3/day	15	20	30/35	--	35	35	--	30	--	--	--	--	--	--	--	--	--	--	--	--	--
Normal Average Volume m^3/day	1.2	0.4	1.8	--	3.1	3.1	--	0.18	--	--	--	--	--	--	--	--	--	--	--	--	--
Maximum Volume m^3/day	30	20	35	--	105	105	--	80	--	--	--	--	--	--	--	--	--	--	--	--	--
Flow m^3/hour	--	--	30	90	--	30	90	--	10	10	190	10	90	10	--	10	--	30	90	30	10
Temperature °C	88	88	88	88	88	88	88	88	88	88	88	88	88	88	--	88	--	88	88	88	88
Pressure kg/cm^2	10	10	10	10	10	10	10	10	10	10	10	10	10	10	--	10	--	10	10	10	10
Conductivity μS/cm	--	--	--	--	--	--	--	--	--	--	--	--	--	--	--	--	--	--	--	--	--
Undissolved Solid ppm	2200	2800	2200~2800	2200~2800	850	850	850	10 wt%	--	10~15 wt%	10 wt%	15 wt%	15 wt%	10~15 wt%	--	--	--	>2000	>2000	>2000	--

Stream No. ○	1	2	3	4	5	6	7
Utility	MUW	IA	SA	MUW	SA	MUW	SA
Pressure kg/cm^2	4.0	4.0	4.0	4.0	4.0	4.0	4.0
Flow m^3/hour	10	38 Nm^3/hr	22 Nm^3/hr	10	112 Nm^3/hr	10	112 Nm^3/hr
Heat kcal/hr	--	--	--	--	--	--	--
Temperature °C	≤40	≤40	≤40	≤40	≤40	≤40	≤40

Notes:

(a) Based on one collector tank batch

FIGURE 11.2-1 RADWASTE SYSTEM (SHEET 2 OF 2)

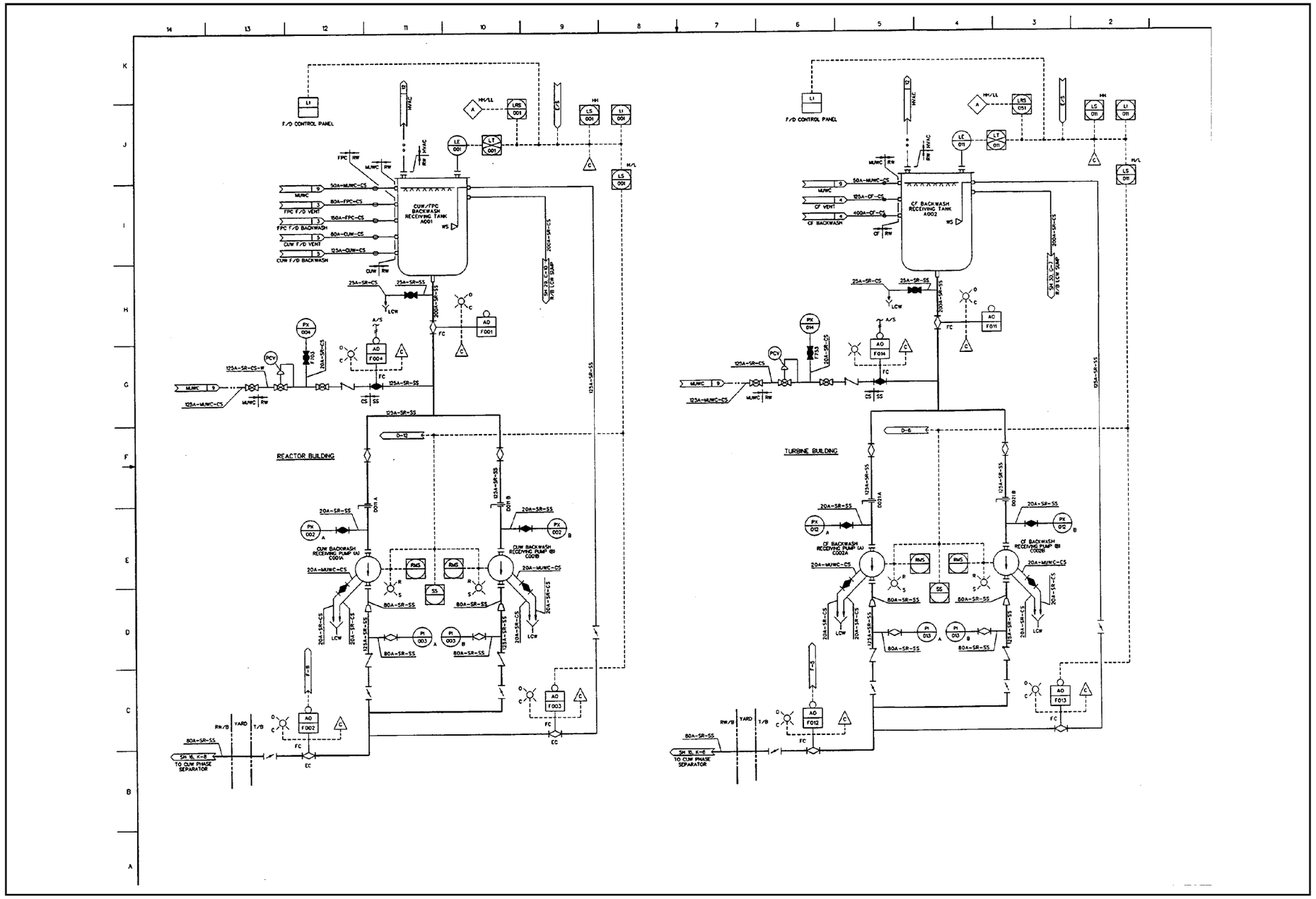

FIGURE 11.2-2 RADWASTE SYSTEM (SHEET 15 OF 36)

Figure 12.3-1 removed by NRC staff

Offical Use Only - Security Related Information

Figure 12.3-3 removed by NRC staff

Offical Use Only - Security Related Information

Figure 12.3-6 removed by NRC staff

Offical Use Only - Security Related Information

NOT FOR PUBLIC RELEASE

FIGURE 12.3-37 RADWASTE BUILDING, RADIATION ZONE MAP, NORMAL OPERATION AT ELEVATION - 3300 MM

NOT FOR PUBLIC RELEASE

FIGURE 12.3-38 RADWASTE BUILDING, RADIATION ZONE MAP, NORMAL OPERATION AT ELEVATION - 3700 MM

NOT FOR PUBLIC RELEASE

FIGURE 12.3-39 RADWASTE BUILDING, RADIATION ZONE MAP, NORMAL OPERATION AT ELEVATION - 10700 MM

NOT FOR PUBLIC RELEASE

FIGURE 12.3-40 RADWASTE BUILDING, RADIATION ZONE MAP, NORMAL OPERATION AT ELEVATION - 16700 MM

NOT FOR PUBLIC RELEASE

FIGURE 12.3-41 RADWASTE BUILDING, RADIATION ZONE MAP, NORMAL OPERATION AT CROSS SECTION A-A

NOT FOR PUBLIC RELEASE

FIGURE 12.3-49 TURNINE BUILDING RADIATION ZONE AT ELEVATION 5300 mm

NOT FOR PUBLIC RELEASE

FIGURE 12.3-50 TURBINE BUILDING RADIATION ZONE AT ELEVATION 12300 mm

NOT FOR PUBLIC RELEASE

FIGURE 12.3-51 TURBINE BUILDING, RADIATION ZONE AT ELEVATION 2300 mm

NOT FOR PUBLIC RELEASE

FIGURE 12.3-52 TURBINE BUILDING RADIATION ZONE AT ELEVATION 30300 mm

NOT FOR PUBLIC RELEASE

FIGURE 12.3-53 TURBINE BUILDING RADIATION ZONE AT NORMAL OPERATION-LONGITUDINAL SECTION A-A

NOT FOR PUBLIC RELEASE

FIGURE 12.3-56 REACTOR BUILDING, AREA RADIATION MONITORS, -8200 mm

NOT FOR PUBLIC RELEASE

FIGURE 12.3-57 REACTOR BUILDING, AREA RADIATION MONITORS, -1700 mm and 1500 mm

NOT FOR PUBLIC RELEASE

FIGURE 12.3-58 REACTOR BUILDING, AREA RADIATION MONITORS, 4800 mm

NOT FOR PUBLIC RELEASE

FIGURE 12.3-60 REACTOR BUILDING, AREA RADIATION MONITORS, 23500 mm

NOT FOR PUBLIC RELEASE

FIGURE 12.3-62 REACTOR BUILDING, AREA RADIATION MONITORS, 31700 mm

NOT FOR PUBLIC RELEASE

FIGURE 12.3-65 ~~RADWASTE BUILDING, AREA RADIATION MONITORS AT ELEVATION 1500 mm~~ Not Used

NOT FOR PUBLIC RELEASE

FIGURE 12.3-66 REACTOR BUILDING, AREA RADIATION MONITORS, 3700 mm

NOT FOR PUBLIC RELEASE

FIGURE 12.3-67 REACTOR BUILDING, AREA RADIATION MONITORS, 10700 mm

NOT FOR PUBLIC RELEASE

FIGURE 12.3-68 ~~RADWASTE BUILDING, AREA RADIATION MONITORS AT ELEVATION 21000 mm~~ Not Used

NOT FOR PUBLIC RELEASE

FIGURE 12.3-69 TURBINE BUILDING, GRADE LEVEL 1, AREA RADIATION MONITOR, 5300 mm

NOT FOR PUBLIC RELEASE

FIGURE 12.3-70 TURBINE BUILDING, GRADE LEVEL 2, AREA RADIATION MONITORS, 12300 mm

NOT FOR PUBLIC RELEASE

FIGURE 12.3-71 TURBINE BUILDING, LEVEL 3, AREA RADIATION MONITOR ELEVATION, 20300 mm

NOT FOR PUBLIC RELEASE

FIGURE 12.3-72 TURBINE BUILDING, LEVEL 4, AREA RADIATION MONITOR ELEVATION 30300 mm

NOT FOR PUBLIC RELEASE

FIGURE 12.3-73 TURBINE BUILDING, AREA RADIATION MONITOR, LONGITUDINAL SECTION A-A