Data Communications

TABLE 1 LPRM TO APRM ASSIGNMENTS

DET AND LPRM LOCATION	APRM CHANNEL A	B	C	D	MUX UNIT NO.
20-61	B	C	D	A	1
28-61	C	D	A	B	2
36-61	B	C	D	A	3
44-61	C	D	A	B	4
52-61	B	C	D	A	1
12-53	D	A	B	C	1
20-53	A	B	C	D	4
28-53	D	A	B	C	3
36-53	A	B	C	D	2
44-53	D	A	B	C	1
52-53	A	B	C	D	4
60-53	D	A	B	C	3
04-45	B	C	D	A	4
12-45	C	D	A	B	3
20-45	B	C	D	A	2
28-45	C	D	A	B	1
36-45	B	C	D	A	4
44-45	C	D	A	B	3
52-45	B	C	D	A	2
60-45	C	D	A	B	1
04-37	A	B	C	D	2
12-37	D	A	B	C	2
20-37	A	B	C	D	3
28-37	D	A	B	C	4
36-37	A	B	C	D	1
44-37	D	A	B	C	2
52-37	A	B	C	D	3
60-37	D	A	B	C	4
04-29	B	C	D	A	3
12-29	C	D	A	B	4
20-29	B	C	D	A	1
28-29	C	D	A	B	2
36-29	B	C	D	A	3
44-29	C	D	A	B	4
52-29	B	C	D	A	1
60-29	C	D	A	B	2

TABLE 1 LPRM TO APRM ASSIGNMENTS (CONT'D)

DET AND LPRM LOCATION	APRM CHANNEL A	B	C	D	MUX UNIT NO.
12-21	D	A	B	C	1
20-21	A	B	C	D	4
28-21	D	A	B	C	3
36-21	A	B	C	D	2
44-21	D	A	B	C	1
52-21	A	B	C	D	4
60-21	D	A	B	C	3
12-13	C	D	A	B	3
20-13	B	C	D	A	2
28-13	C	D	A	B	1
36-13	B	C	D	A	4
44-13	C	D	A	B	3
52-13	B	C	D	A	2
28-05	D	A	B	C	4
36-05	A	B	C	D	1
44-05	D	A	B	C	2

(NOTE 9)

TABLE 2 LPRM STRING ASSIGNMENT TO ATIP MACHINES

ATIP A POSITION #	ATIP A LPRM LOC.	ATIP B POSITION #	ATIP B LPRM LOC.	ATIP C POSITION #	ATIP C LPRM LOC.
1	04-29	1	28-05	1	44-13
2	04-37	2	28-13	2	44-21
3	04-45	3	28-21	3	44-29
4	12-13	4	28-29	4	44-37
5	12-21	5	28-37	5	44-45
6	12-29	6	28-45	6	44-53
7	12-37	7	28-53	7	44-61
8	12-45	8	28-61	8	52-13
9	12-53	9	36-05	9	52-21
10	20-13	10	36-13	10	52-29
11	20-21	11	36-21	11	52-37
12	20-29	12	36-29	12	52-45
13	20-37	13	36-45	13	52-53
14	20-45	14	36-53	14	52-61
15	20-53	15	36-61	15	60-21
16	20-61	16	44-05	16	60-29
17	–	17	–	17	60-37
18	–	18	–	18	60-45
19	–	19	–	19	60-53
20	36-37	20	36-37	20	36-37

TABLE 3 POWER DISTRIBUTION

	120V AC DIVISIONAL UPS BUS A	B	C	D
DIVISION	I	II	III	IV
SRNM CH'S	A,E,J	B,F	C,G,L	D,H
APRM CH'S	A	B	C	D
	120V AC NON-DIVISIONAL UPS A	B	C	D
MRBM CH'S	A	B		
SRNM RECORDERS	A,E,J	B,F	C,G,L	D,H
APRM RECORDERS	A	B	C	D
MRBM RECORDERS	A	B	A	B
460V, 3 Ø 3KVA:	ATIP DRIVE MECHANISMS			
~~120V AC:~~	~~ATIP INSTR. PANEL~~			

125 VDC VCM PNL

LEGEND:

- O – LPRM DETECTOR ASM (52)
- + – CONTROL RODS (205)
- □ – SRNM DETECTORS (10)
- △ – NEUTRON SOURCES (5)
- ◫ – SIGNAL ISOLATION
- C – COMPUTER INPUTS
- T – TRANSIENT TEST PANEL INPUTS
- ⇒ – MULTIPLEXING TRANSMISSION (VIA OPTIC FIBER OR METALLIC CONDUCTOR)
- → – SINGLE TRANSMISSION

Data

SUPPLEMENTAL DOCUMENTS UNDER THE FOLLOWING IDENTITIES ARE TO BE USED IN CONJUNCTION WITH THIS DRAWING:

	MPL NO.
1. RECIRCULATION FLOW CONTROL SYS, IED	C81-1040
2. PMCS INPUT/OUTPUT LIST	C90-1060
3. PIPING AND INSTRUMENT SYMBOLS DIAGRAM	A10-3030
4. REACTOR PROTECTION SYS, IED	C71-1040
5. ROD CONTROL AND INFORMATION SYS, IED	C11-1040
6. PMCS IED	C90-1040
7. MCRP SYSTEM IED	H11-1040
8. AUTOMATIC POWER REGULATOR SYS IED	C82-1040
9. NEUTRON MONITORING SYSTEM, IBD	C51-1030
10. NEUTRON MONITORING SYS ARGMT	C51-1070

ABBREVIATIONS

RPS --- REACTOR PROTECTION SYSTEM
SRNM --- STARTUP RANGE NEUTRON MONITOR
LPRM --- LOCAL POWER RANGE MONITOR
APRM --- AVERAGE POWER RANGE MONITOR
ATIP --- AUTOMATED TRAVERSING INCORE PROBE
MRBM --- MULTI-CHANNEL ROD BLOCK MONITOR
UPS --- UNINTERRUPTABLE POWER SUPPLY
NMS --- NEUTRON MONITORING SYSTEM
RC&IS --- ROD CONTROL AND INFORMATION SYSTEM
MCRP --- MAIN CONTROL ROOM PANEL
PMCS --- PERFORMANCE MONITORING CONTROL SYSTEM
APRS --- AUTOMATIC POWER REGULATOR SYSTEM
MSV --- MEAN SQUARE VOLTAGE
ATLM --- AUTOMATED THERMAL LIMIT MONITOR
OPRM --- OSCILLATION POWER RANGE MONITOR

RTIS-REACTOR TRIP AND ISOLATION SYSTEM

NOTES:

1. THIS DOCUMENT PRESENTS THE BASIC REQUIREMENTS OF FUNCTIONAL UNITS ALLOCATION OF THE NMS INSTRUMENTS, THEIR BASIC FUNCTIONS, AND THEIR INPUT AND OUTPUT REQUIREMENTS TO OTHER SYSTEMS. IT ALSO INCLUDES REQUIREMENTS OF DETECTOR LOCATION ASSIGNMENTS IN CORE AS WELL AS THEIR ASSIGNMENTS TO DIFFERENT DIVISIONS.
2. ALL EQUIPMENT, INSTRUMENTS AND DISPLAY CONTROL SYSTEM INPUT SIGNALS ARE PREFIXED BY C51- UNLESS OTHERWISE NOTED. THE PART NUMBERS ARE LOCATED ADJACENT TO OR ON THE SIGNAL CONDITIONING EQUIPMENT PERFORMING THE FUNCTION INDICATED.
3. AN AREA RADIATION MONITOR IS RECOMMENDED TO BE INSTALLED IN THE TIP DRIVE MECHANISM ROOM, AND THE OUTSIDE OF THE PERSONNEL HATCH DOOR (TO THE DRYWELL).
4. REMOTE DISPLAY MEANS DISPLAY ON MAIN CONTROL ROOM PANEL. FOR DISPLAY DEVICE TYPE, REFER TO C51-5030.
5. REMOTE RECORDING DEVICE SHALL BE BASED ON THAT SPECIFIED IN H11-4010.
6. SRNM NON-COINCIDENT UPSCALE LEVEL TRIP IS ONLY ACTIVATED BY MANUAL SWITCH IN RPS.
7. THESE ARE SAFETY RELATED CORE PLATE DIFFERENTIAL PRESSURE (C81-DPT301A-D) SIGNALS OF THE RFCS ESSENTIAL CORE PLATE DIFFERENTIAL PRESSURE SIGNALS.
8. COMMAND AND CONTROL SIGNALS BETWEEN THE ~~PROCESS COMPUTER~~ AND THE ATIP OTHER THAN ATIP MEASURED DATA ARE TRANSMITTED THROUGH THIS DATA ENTRY POINT.
9. IN CASE OF USING ~~MULTIPLEXING UNITS OR SUB-MUX UNITS~~, DETECTORS SIGNALS ARE ~~DISTRIBUTED~~ TO FOUR MULTIPLEXER UNITS, IN ~~EACH DIVISION~~ ACCORDING TO TABLE 1 ARRANGEMENT. THE ~~MULTIPLEXER~~ UNIT ASSIGNMENT ONLY DEPENDS ON LPRM STRING LOCATION AND ARE IDENTICAL FOR ALL FOUR DIVISIONS.
10. THE DATA COMMUNICATION FUNCTION (DCF) REFERS TO THE INPUT/OUTPUT FUNCTION OF THE SRNM AND THE APRM. THIS IED DOES NOT SPECIFY THE ACTUAL HARDWARE IMPLEMENTATION OF THIS DCF.
11. FOR DETAIL TRIP SIGNAL FUNCTIONAL INTERFACES WITH RCIS & RPS, REFER TO SUPPL DOC 8. THERE SHOULD BE A SEPARATE RCIS AND RPS TRIP LOGIC FUNCTION INDEPENDENT OF EACH INDIVIDUAL SRNM CHANNEL IN THE DIVISION. THE ~~OSLC~~ INTERLOCK SIGNAL IS THE "ATWS PERMISSIVE" SIGNAL.
12. THIS IED INCLUDES ALL MAIN INPUT/OUTPUT SIGNALS REQUIRED TO BE INCLUDED IN THE INSTRUMENT DESIGN. FOR DETAIL BINARY TRIP SIGNALS, REFER TO NMS IBD, SUPPLEMENTAL DOCUMENT 9.
13. THE SIGNAL TRANSMISSION PATH CAN BE EITHER THROUGH ~~MULTIPLEXING OR~~ THROUGH DEDICATED CONDUCTORS.
14. TRIP SIGNALS FROM THE NMS TO THE PMCS SHALL BE TRANSMITTED VIA DEDICATED CONDUCTORS (E.G. METAL CABLE WITH PROPER ISOLATION) TO AVOID UNNECESSARY TIME DELAY FOR TRIP SEQUENCE RECORDING.
15. THE OPRM IS A FUNCTIONAL SUBSYSTEM OF THE APRM. IT RECEIVES THE SAME LPRM SIGNALS THE APRM OF THE SAME DIVISION RECEIVES AS INPUT, AS SHOWN IN TABLE 1. THE OPRM LOGIC IS DESCRIBED IN SUPPL DOC 9.

Plant computer functions

Data Communication

RTIS

Data Communication

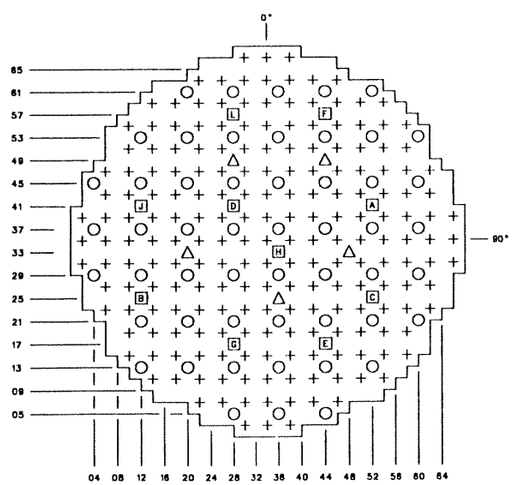

FIGURE 1: DETECTOR AND CONTROL ELEMENT ARRANGEMENT (TOP VIEW OF CORE)

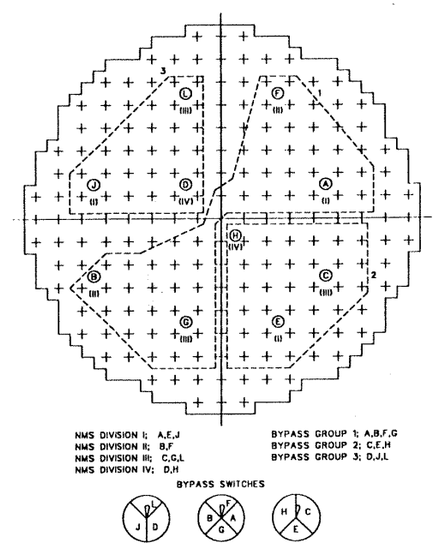

FIGURE 2: SRNM DIVISION & BYPASS GROUP ASSIGNMENTS

MPL NO. C51-1040

FIGURE 7.6-1 NEUTRON MONITORING SYSTEM IED SH 1 OF 4

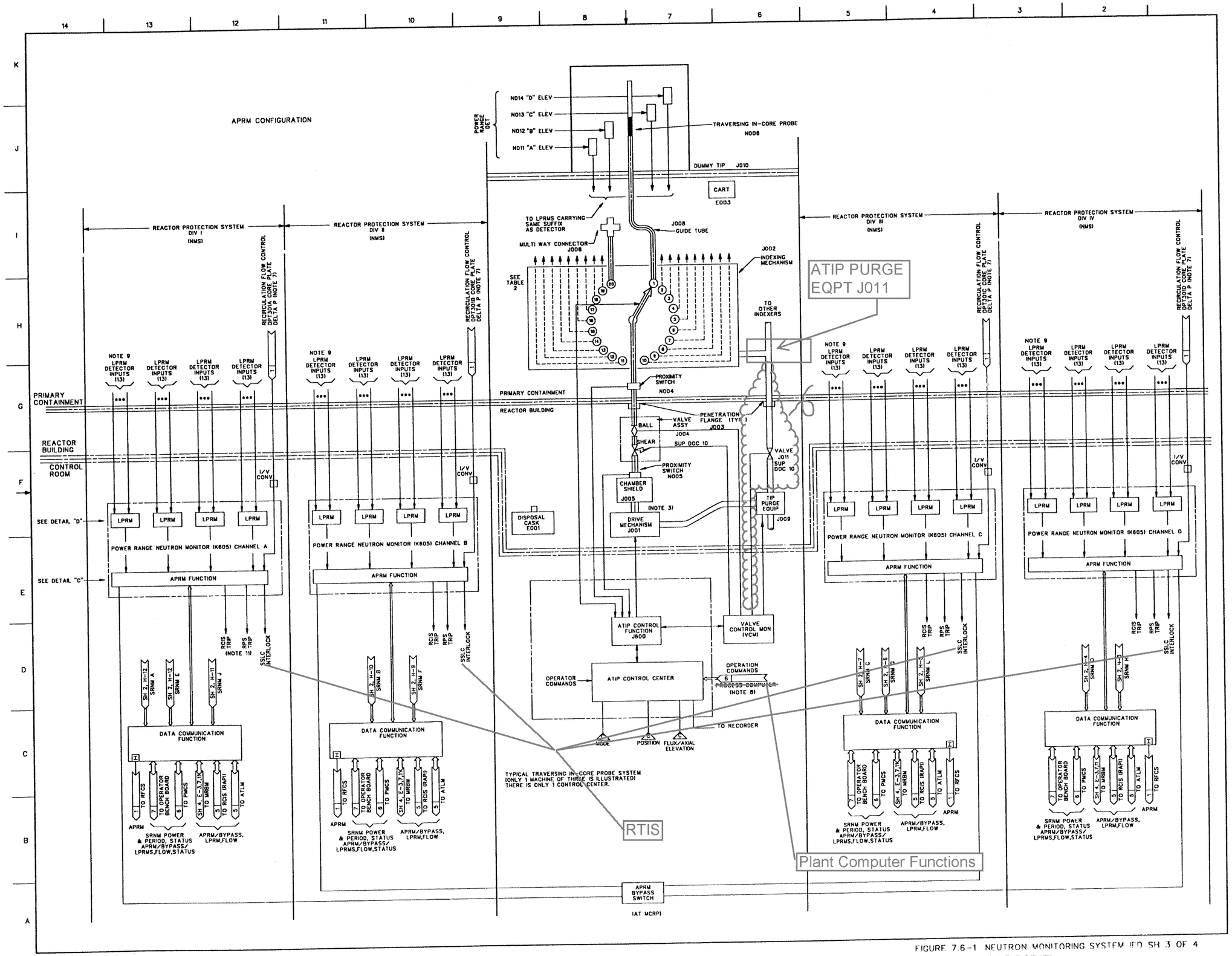

FIGURE 7.6-1 NEUTRON MONITORING SYSTEM (FD SH 3 OF 4

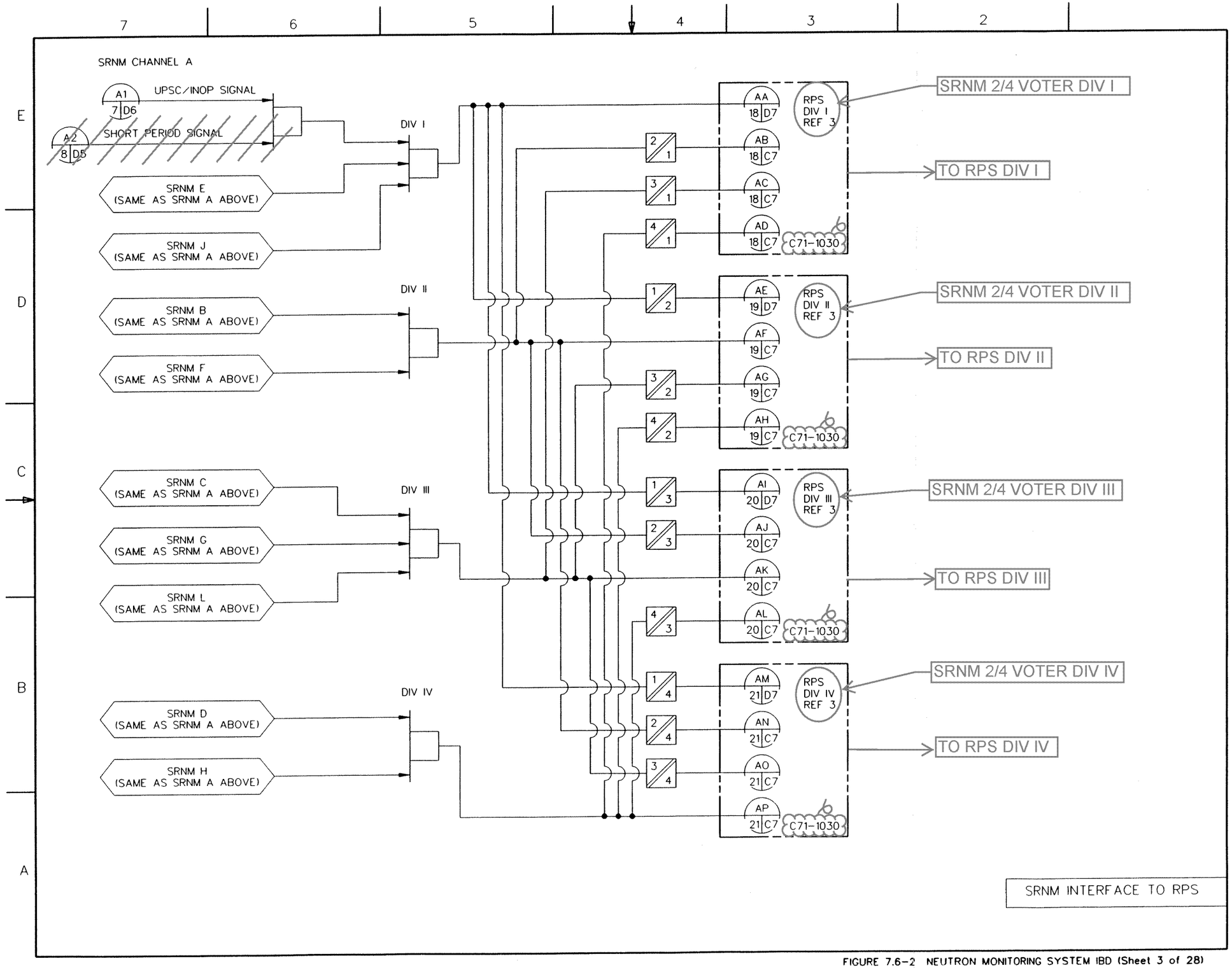

FIGURE 7.6-2 NEUTRON MONITORING SYSTEM IBD (Sheet 3 of 28)

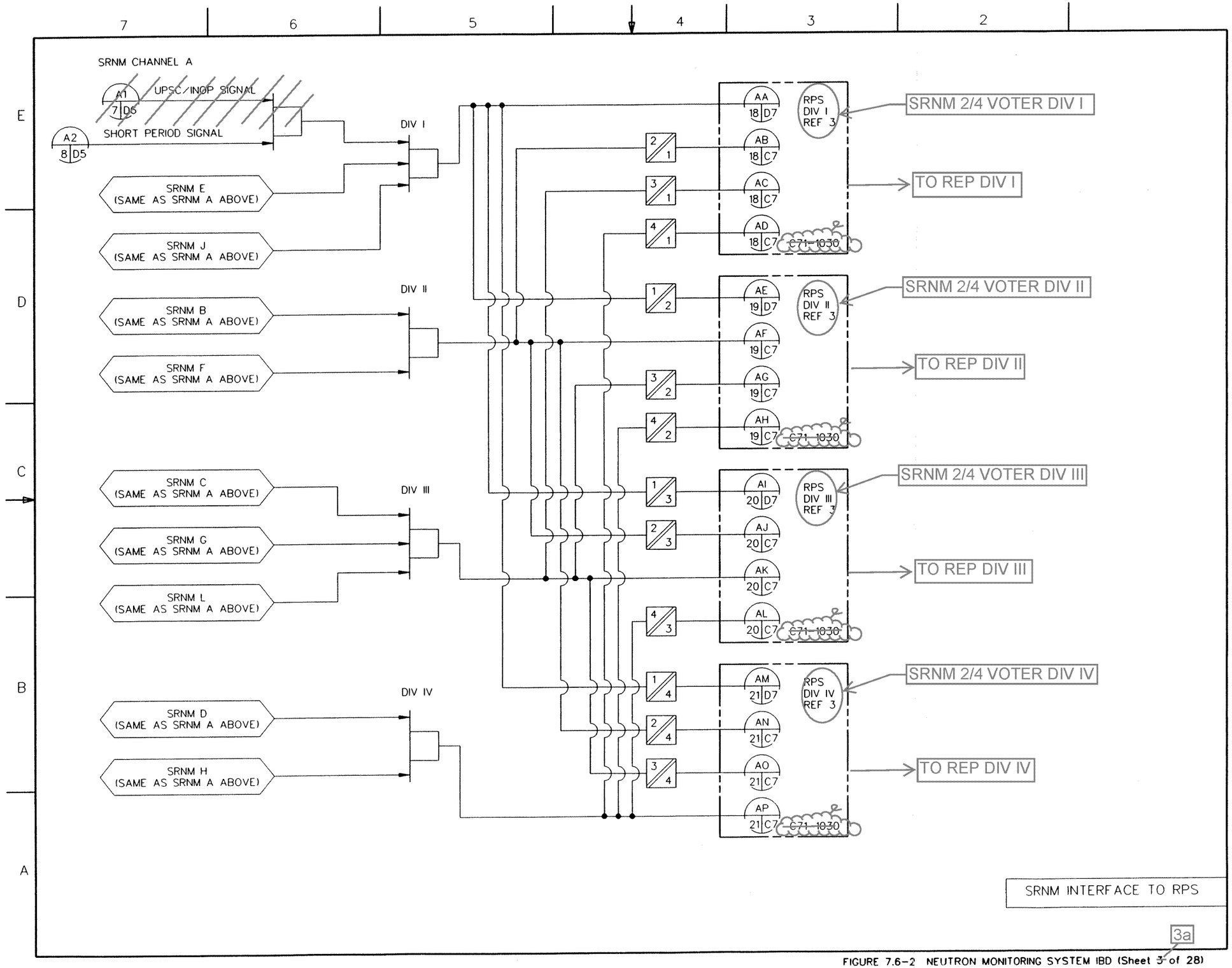

FIGURE 7.6-2 NEUTRON MONITORING SYSTEM IBD (Sheet ~~3~~ of 28)

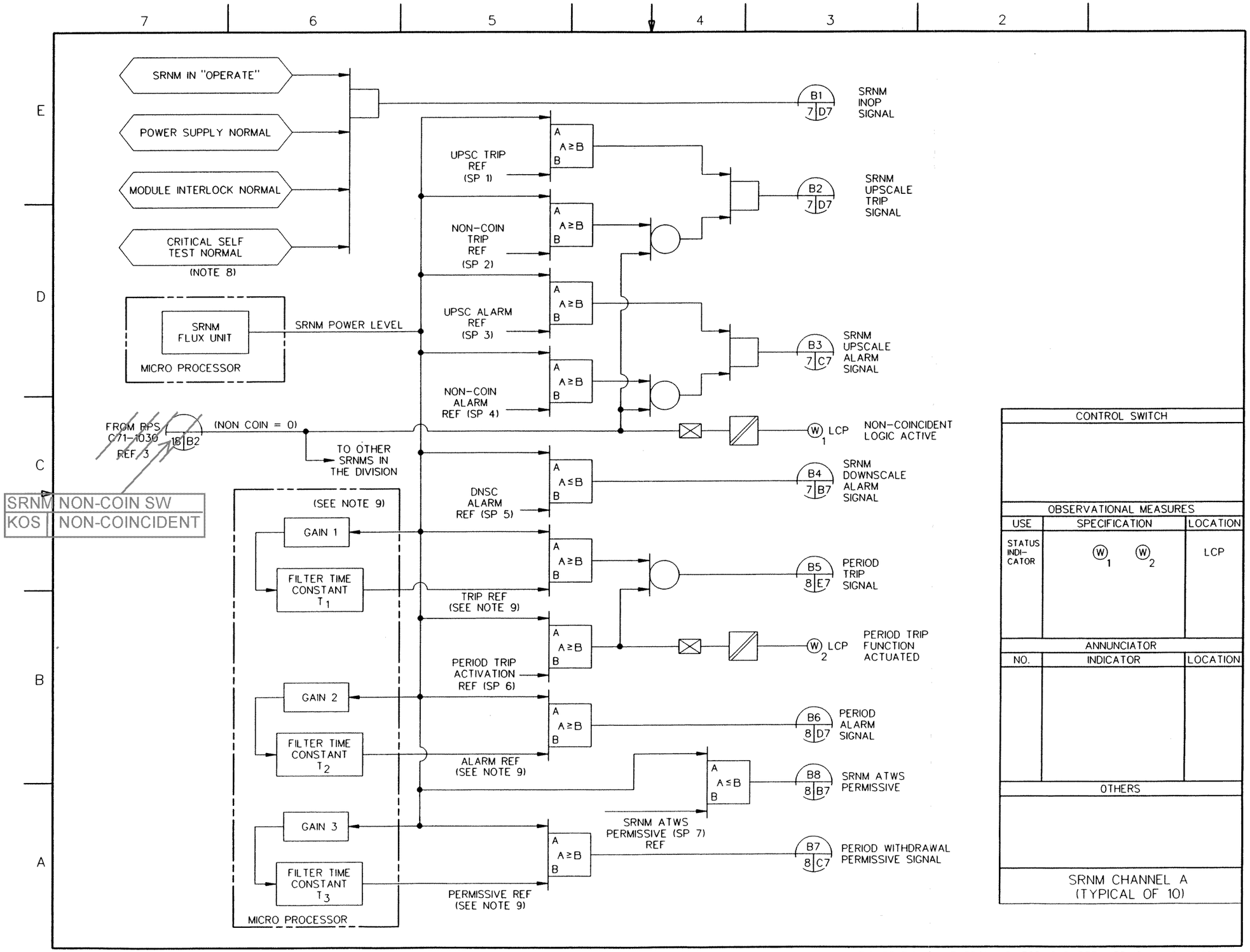

FIGURE 7.6-2 NEUTRON MONITORING SYSTEM IBD (Sheet 6 of 28)

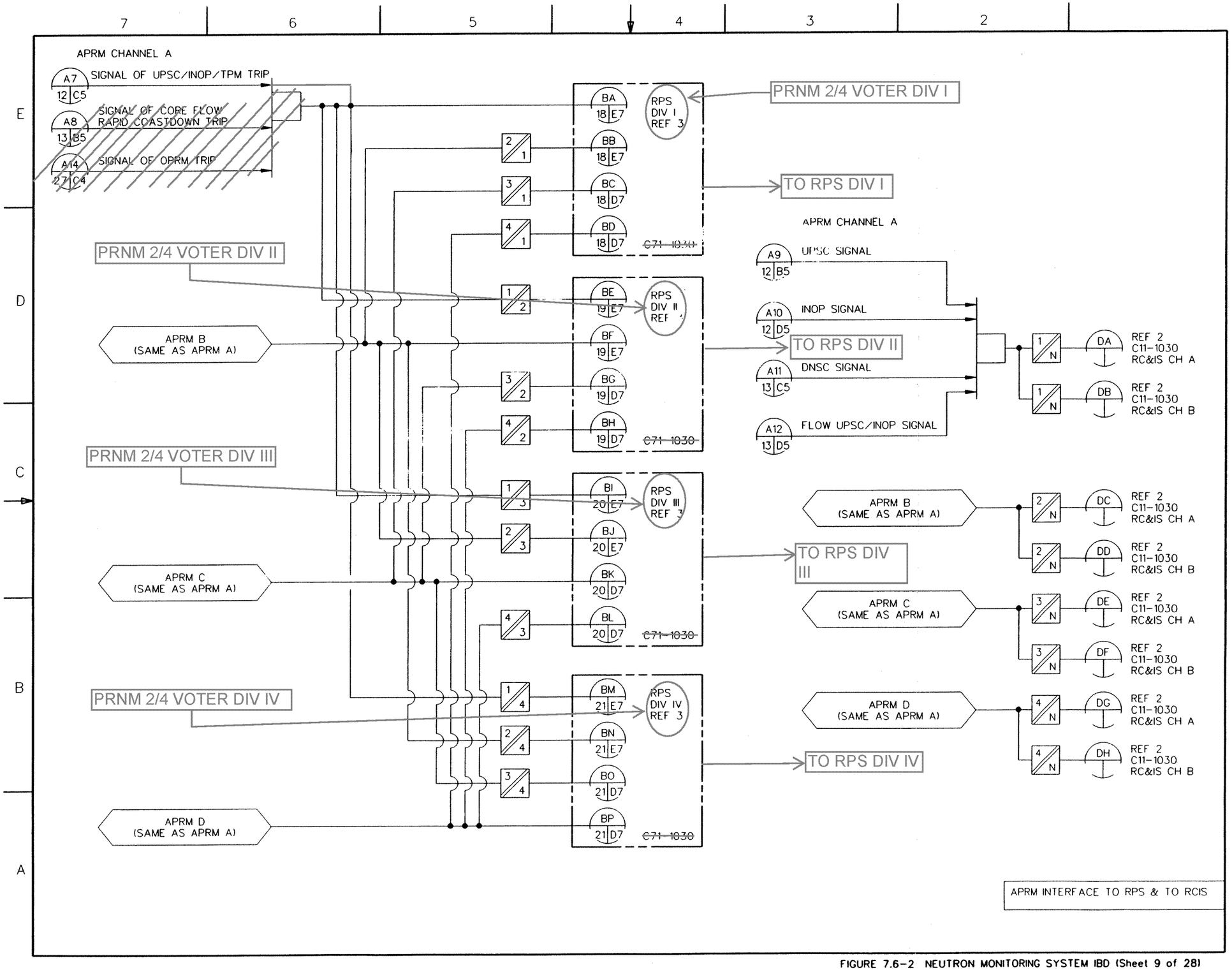

FIGURE 7.6-2 NEUTRON MONITORING SYSTEM IBD (Sheet 9 of 28)

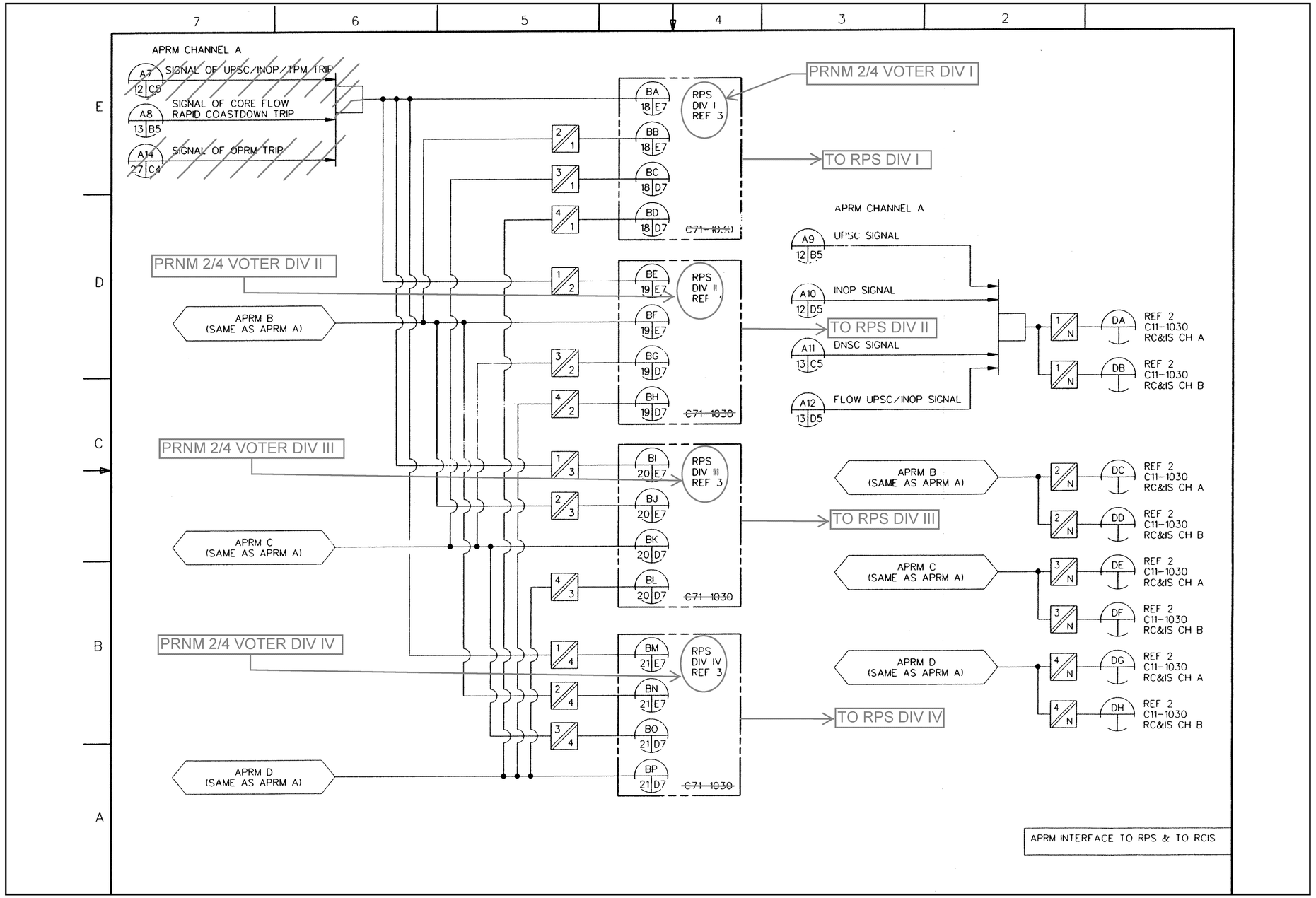

FIGURE 7.6-2 NEUTRON MONITORING SYSTEM IBD (Sheet 9a of 28)

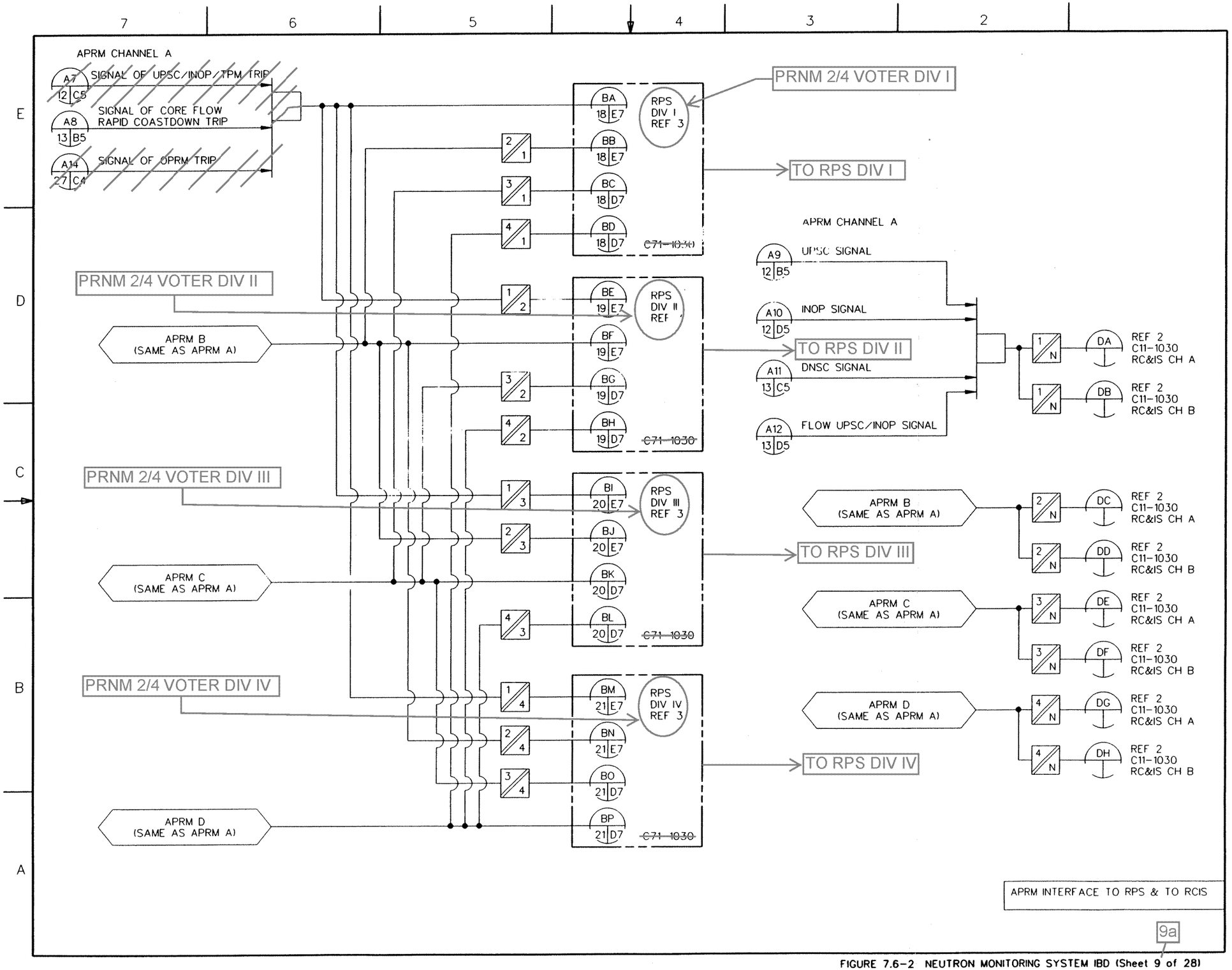

FIGURE 7.6-2 NEUTRON MONITORING SYSTEM IBD (Sheet 9 of 28)

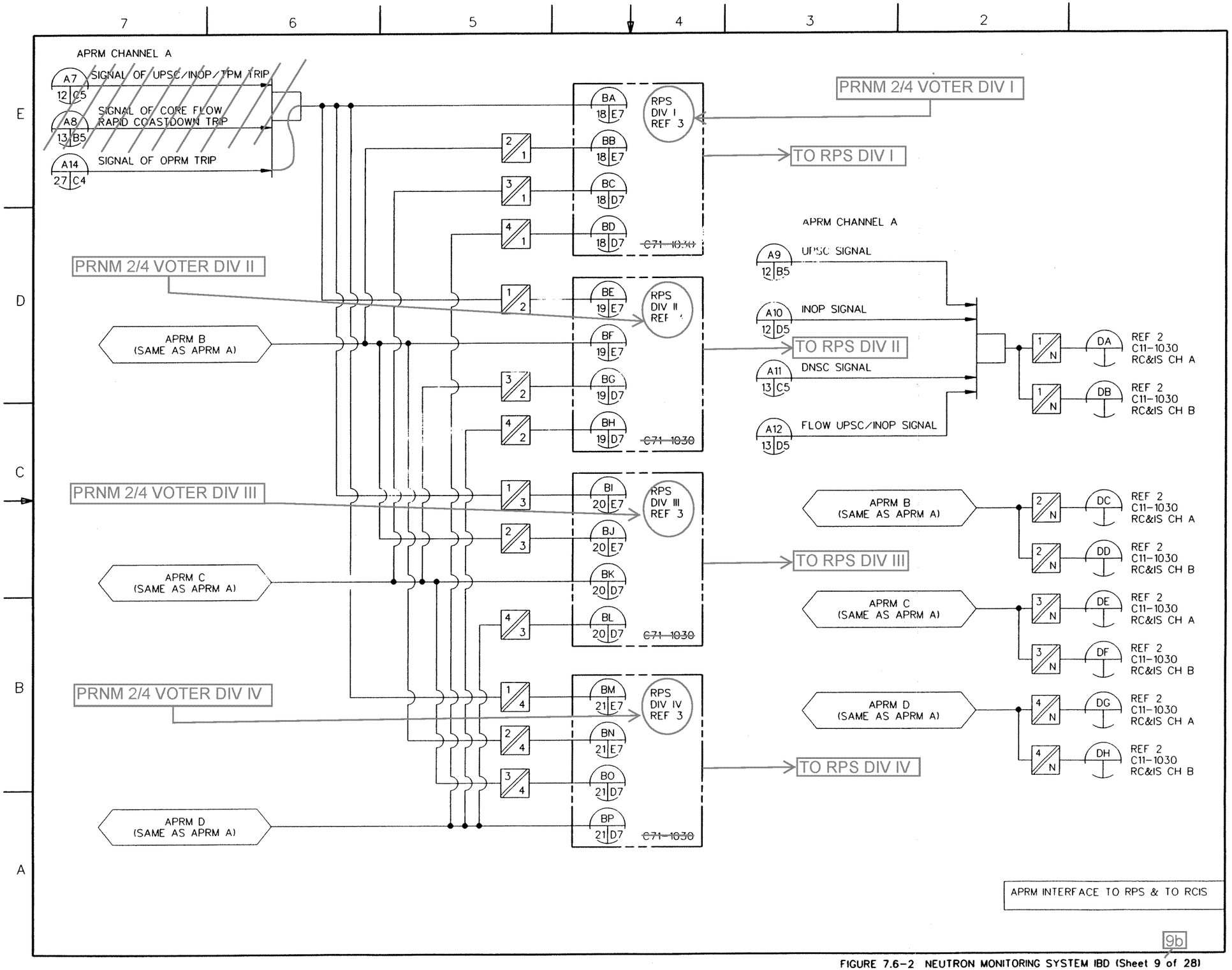

FIGURE 7.6-2 NEUTRON MONITORING SYSTEM IBD (Sheet 9 of 28)

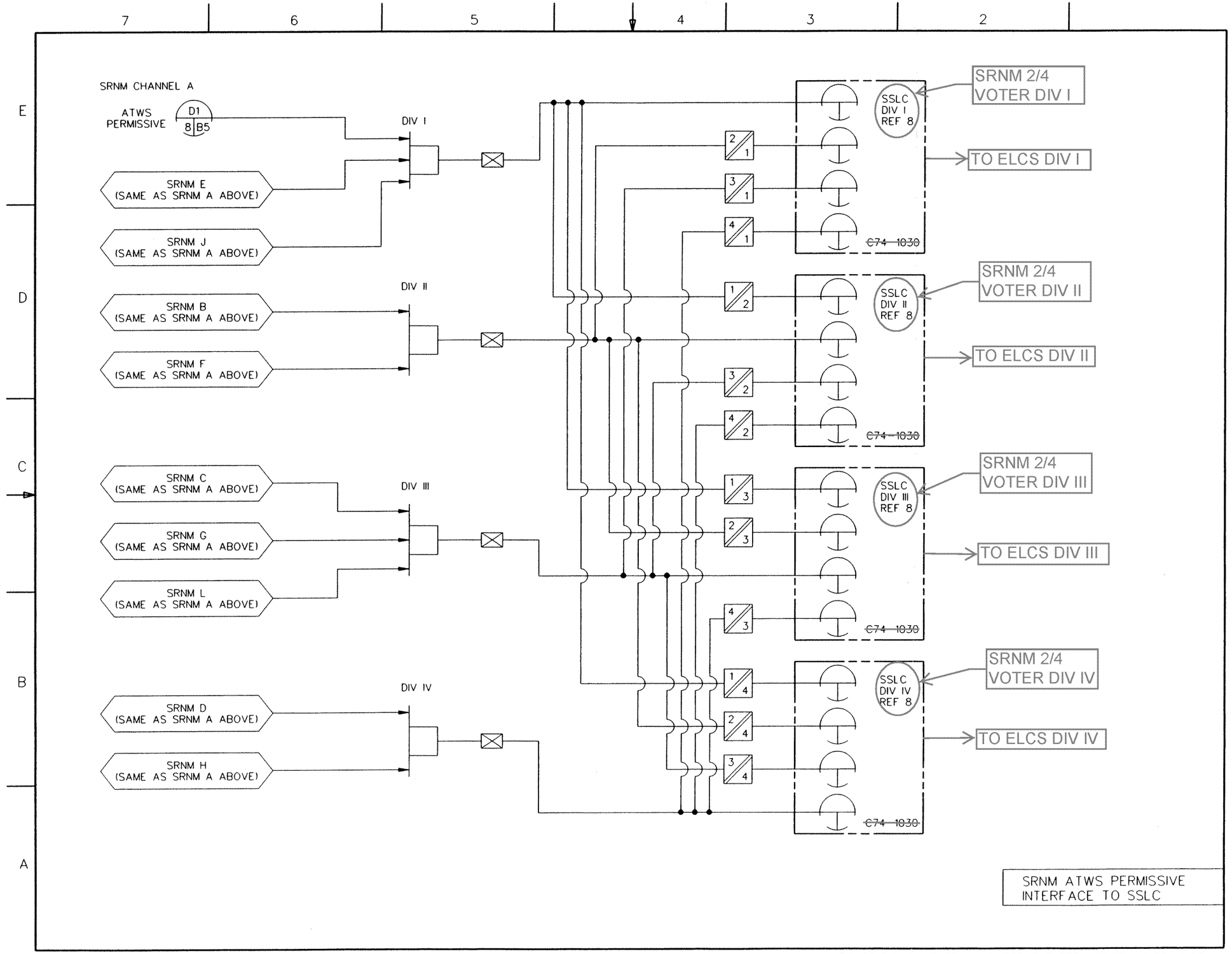

FIGURE 7.6-2 NEUTRON MONITORING SYSTEM IBD (Sheet 25 of 28)

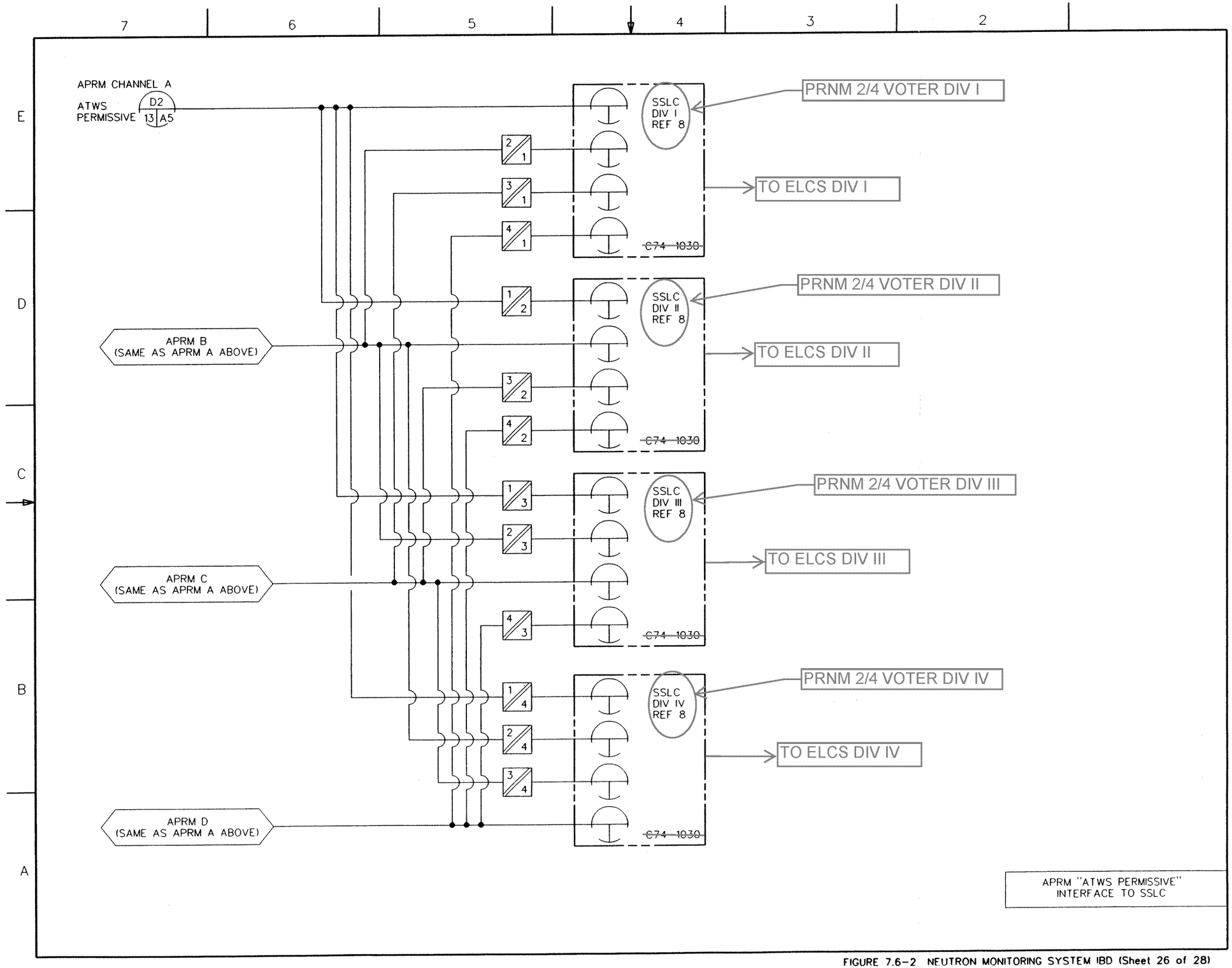

FIGURE 7.6-2 NEUTRON MONITORING SYSTEM IBD (Sheet 26 of 28)

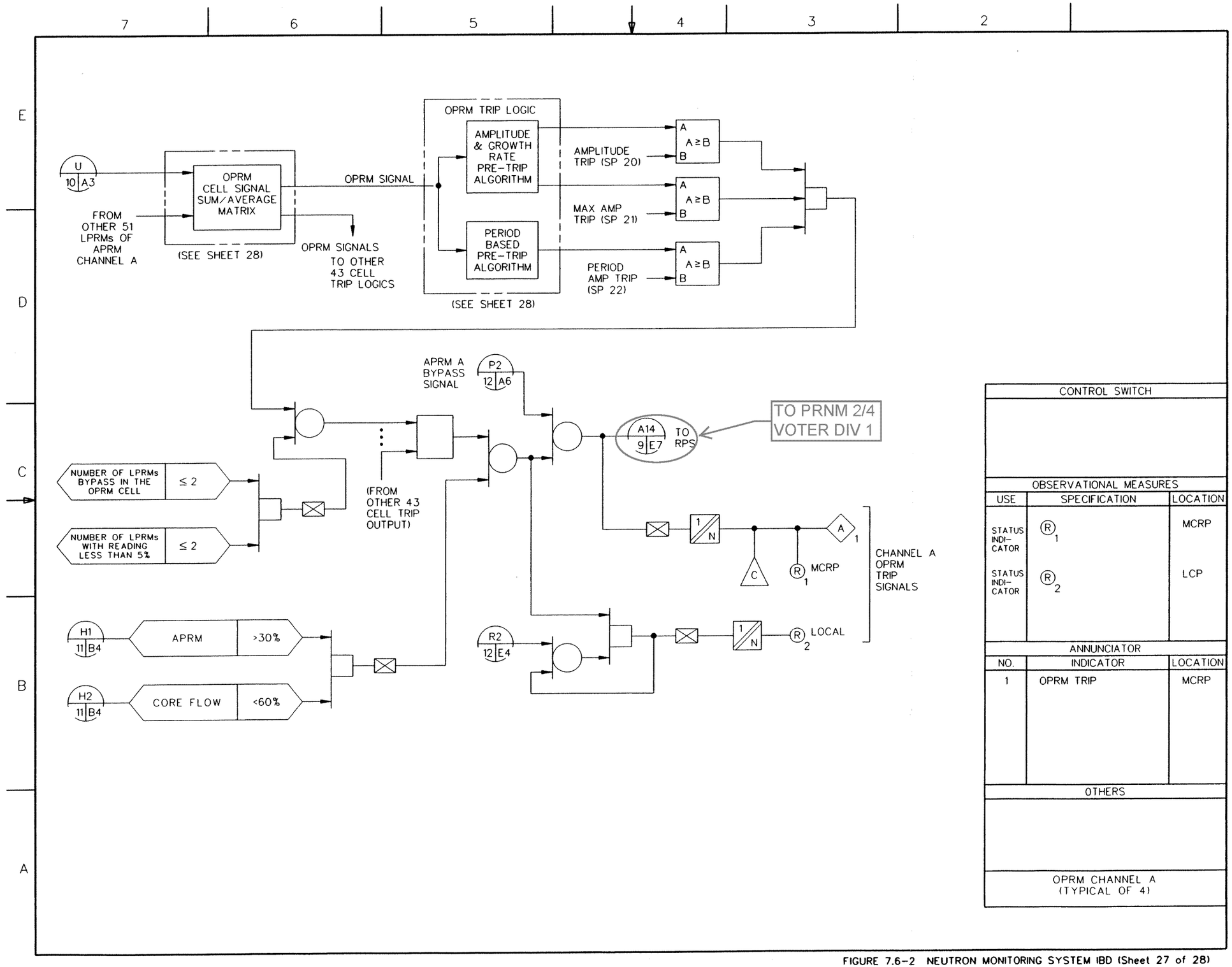

CONTROL SWITCH

OBSERVATIONAL MEASURES		
USE	SPECIFICATION	LOCATION
STATUS INDI-CATOR	R 1	MCRP
STATUS INDI-CATOR	R 2	LCP

ANNUNCIATOR		
NO.	INDICATOR	LOCATION
1	OPRM TRIP	MCRP

OTHERS

OPRM CHANNEL A
(TYPICAL OF 4)

FIGURE 7.6-2 NEUTRON MONITORING SYSTEM IBD (Sheet 27 of 28)

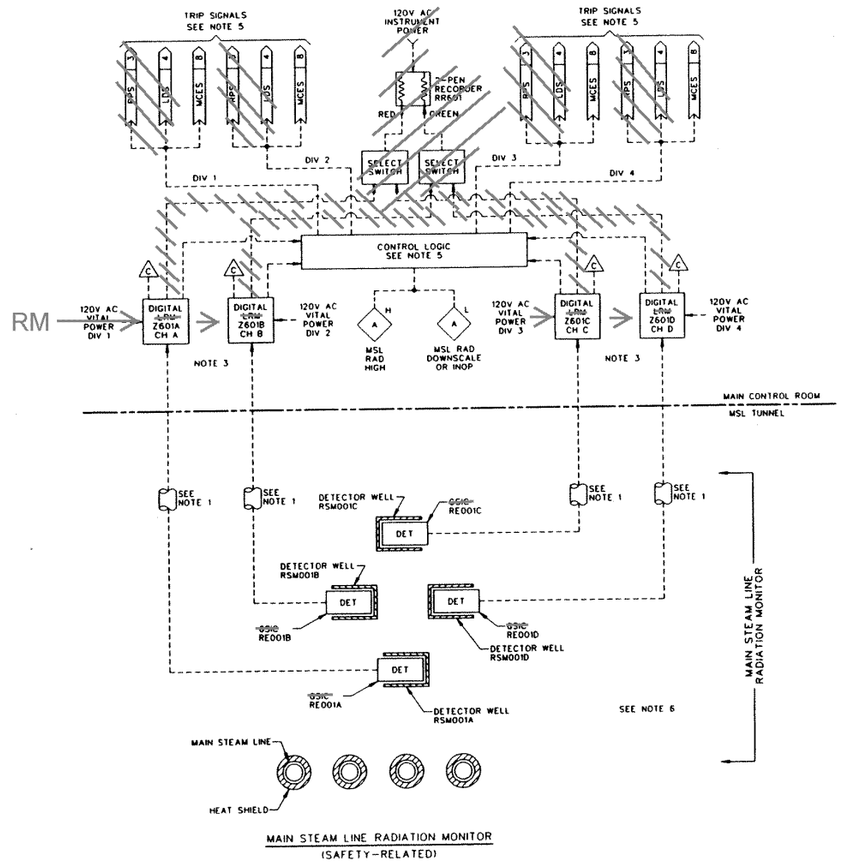

MAIN STEAM LINE RADIATION MONITOR
(SAFETY-RELATED)

REFERENCE DOCUMENTS

		REFERENCE DESIGNATOR
1	SPECIAL WIRE & CABLE REQUIREMENTS SPEC	A11-3080
2	ELECTRICAL EQUIPMENT SEPARATION SPEC	A11-3120
3	REACTOR PROTECTION SYSTEM IED	C71-1040
4	LEAK DETECTION AND ISOLATION SYSTEM IED	E31-1040
5	RADWASTE SYSTEM P&ID	K17-1010
6	MAKEUP WATER SYSTEM (PURIFIED) P&ID	P11-1010
7	REACTOR BUILDING COOLING WATER SYSTEM P&ID	P21-1010
8	MAIN CONDENSER EVACUATION SYSTEM P&ID	N61-1010
9	OFFGAS SYSTEM P&ID	N62-1010
10	INSTRUMENT AIR SYSTEM P&ID	P52-1010
11	STANDBY GAS TREATMENT SYSTEM P&ID	T22-1010
12	HEATING, VENTILATING & AIR CONDITIONING SYSTEM P&ID	U41-1010

LEGEND:

~~ARM - AREA RADIATION MONITOR~~
~~LCRM - DIGITAL LOG COUNT RATE METER~~
~~GM-B - BETA SENSITIVE GM DETECTOR~~
~~GSIC - GAMMA SENSITIVE ION CHAMBER~~
~~SYC - DIGITAL GAMMA SENSITIVE GM DETECTOR~~
~~LRM - LOG RADIATION MONITOR~~
USC - ULTRASONIC CLEANING
--> - SERIAL MULTIPLEXED SIGNALS

NOTES:

1. ALL CABLES AND WIRING SHALL CONFORM TO THE SPECIAL WIRE AND CABLE REQUIREMENTS AS SPECIFIED IN REF DOC 1
2. THE SAFETY RELATED SUBSYSTEMS OF THE PROCESS RADIATION MONITORING SYSTEM SHALL CONFORM TO THE CRITERIA AND REQUIREMENTS FOR ELECTRICAL SEPARATION AS DEFINED IN REF DOC 2.
3. FIBER OPTIC CABLES MAY BE USED IN THE DESIGN OF THIS SYSTEM PROVIDED THESE CABLES CONFORM TO THE REQUIREMENTS STIPULATED IN REF DOC(S) 1&2.
4. EACH ~~DIGITAL ARM~~ Z602A,B,C,D ~~& Z603~~ AND ~~LCRM~~ Z701 TO Z704 CAN ACCOMODATE MULTIPLE CHANNELS. THESE MONITORS ARE SHARED WITH THE OTHER SUBSYSTEMS AS INDICATED IN THIS DRAWING.
5. EACH MSL RADIATION MONITOR SHALL PROVIDE A DIVISIONAL TRIP SIGNAL ON EITHER RADIATION HIGH-HIGH OR ON DOWNSCALE INOPERATIVE (INOP) TO INITIATE THE FOLLOWING FUNCTIONS ON A COINCIDENCE VOTE OF ANY TWO OUT OF FOUR CHANNEL TRIPS:
   A. ~~REACTOR SCRAM~~
   ~~B. CLOSURE OF THE MSIV AND MS DRAIN LINE MV VSS~~
   ~~B.~~ C. SHUTDOWN OF THE MAIN CONDENSER MECHANICAL VACUUM PUMP AND CLOSURE OF THE EXIT LINE ISOLATION VALVE

Move text up to align with 'A'

6. THE MSL ION CHAMBERS SHALL BE SENSITIVE TO GAMMA RAYS (GSIC) AND SHALL BE ARRANGED INSIDE THE MSL TUNNEL IN A MANNER SO EACH CAN PROVIDE APPROXIMATELY THE SAME RESPONSE FROM ALL THE STEAM LINES. EACH DETECTOR ASSEMBLY SHALL BE INSERTED INTO A SEALED PIPE WELL TO BE RETRIEVABLE FROM OUTSIDE THE TUNNEL.
7. THESE DETECTORS ARE PROVIDED TO MONITOR RADIATION THAT MAY RESULT FROM A FUEL HANDLING ACCIDENT IN THE FUEL POOL OR THE REACTOR WELL.
8. EACH HVAC AIR EXHAUST ~~RADIATION~~ MONITOR IN THE REACTOR BUILDING AND ~~IN THE FUEL~~ HANDLING AREA PROVIDES A CHANNEL TRIP SIGNAL ~~TO~~ INITIATE THE FOLLOWING FUNCTIONS ON A COINCIDENCE VOTE OF ANY TWO OUT OF FOUR CHANNEL TRIPS:
   A. INITIATE OPERATION OF THE STANDBY GAS TREATMENT SYSTEM (SGTS)
   B. ISOLATE THE AIR INTAKE AND EXHAUST DUCTS OF THE HVAC SYSTEM
   C. ISOLATE THE PURGE AND VENT VALVES OF SECONDARY CONTAINMENT

   THE CHANNEL TRIP SIGNAL FROM EACH MONITOR SHALL CONSIST OF EITHER RADIATION HIGH-HIGH TRIP OR RADIATION DOWNSCALE/INOPERATIVE (INOP) TRIP.

to the LDS system to

9. THE OFF-GAS SAMPLE CHAMBER SHALL BE MOUNTED VERTICALLY WITH ITS PIPING SLOPED AWAY FROM THE CHAMBER TO PERMIT THE CONDENSATE TO DRAIN TO THE PROCESS LINE. A DRAIN SHALL BE PROVIDED AT THE BOTTOM OF THE SAMPLE CHAMBER
10. EACH RADIATION MONITOR SHALL PROVIDE TRIP SIGNALS TO THE OFF-GAS SYSTEM TO PERFORM THE FOLLOWING FUNCTIONS:
    A. BASED ON ONE-OUT-TWO LOGIC SIGNAL, THE RADIATION HIGH-~~HIGH~~ TRIP SIGNAL FROM EITHER MONITOR SHALL ~~INITIATE VALVE ALIGNMENT OF THE OFF-GAS SYSTEM TO FORCE THE GASEOUS EFFLUENTS THROUGH THE CHARCOAL VAULT FOR TREATMENT PRIOR TO RELEASE TO THE STACK~~

close the Offgas bypass valve

    B. BASED ON TWO-OUT-OF TWO LOGIC SIGNALS, THE RADIATION MONITOR CHANNEL TRIP SIGNALS SHALL INITIATE CLOSURE OF THE OFF-GAS SYSTEM VENT RELEASE VALVE ON RADIATION HIGH-HIGH-HIGH (HHH) CHANNEL TRIP FROM BOTH MONITORS, OR ON DOWNSCALE/INOPERATIVE CHANNEL TRIP FROM BOTH MONITORS, OR ON ONE HHH CHANNEL TRIP FROM ONE MONITOR AND ONE DOWNSCALE/INOPERATIVE CHANNEL TRIP FROM THE SECOND MONITOR.
11. HEATING OF THESE LINES MAY BE REQUIRED TO PREVENT CONDENSATION. HEATERS SHALL BE SIZED SO THE TEMPERATURE IS KEPT ABOVE THE DEW POINT.
12. THE RADIATION HIGH-HIGH TRIP SIGNAL FROM EACH MONITOR SHALL INITIATE CLOSURE OF ITS RESPECTIVE LCW AND HCW OUTBOARD DRAIN LINE ISOLATION VALVE.
13. THE RADIATION HIGH-HIGH TRIP, THE DOWNSCALE/INOPERATIVE, OR A NOT SAMPLING CONDITION SHALL CAUSE SHUTDOWN OF THE RADWASTE SYSTEM LIQUID EFFLUENT DISCHARGE PUMPS AND CLOSURE OF THE OULET VALVE IN THE DISCHARGE LINE
14. THE RADIATION MONITORS OF EACH SUBSYSTEM SHALL ISOLATE ITS RESPECTIVE AIR INTAKE DUCTS TO THE CONTROL BUILDING AND START THE EMERGENCY AIR CIRCULATING FAN ON A COINCIDENCE VOTE OF ANY TWO OUT OF FOUR CHANNEL TRIPS ON EITHER RADIATION HIGH-HIGH OR ON DOWNSCALE/INOPERATIVE INDICATION
15. ~~TEE SHALL BE UNION TEE SWAGELOCK TYPE SS-1610-3~~
16. ~~THE SAMPLE LINE SHALL BE 25.4mm X 1.47mm WALL THICKNESS SEAMLESS STAINLESS STEEL TUBING. THE TUBING MINIMUM BEND RADIUS SHALL BE 508mm. THE TUBING LENGTH SHALL BE JOINED WITH SWAGELOCK TYPE SS-1610-6 UNIONS. THE TUBING SHALL SLOPE SO THAT THE CONDENSATE WILL RUN TO DRAIN TEE.~~
17. REMOVABLE SECTION SHALL BE PROVIDED NEAR THE ISOKINETIC PROBE FOR THE INSERTION OF A CHARCOAL FILTER HOLDER IF SIGNIFICANT DEPOSITION IS SUSPECTED. THE FITTINGS ETC. SHALL PROVIDE SMOOTH TRANSITIONS WITHOUT EITHER INTRODUCING DISCONTINUITIES OR REDUCING THE CROSS SECTIONAL AREA OF THE FLOW STREAM.
18. HEATER AND CONDENSATE DRAIN WITH TRAP TO BE SIZED SO THAT TEMPERATURE OF SAMPLE STREAM IS KEPT ABOVE DEW POINT.
19. CONTROL OF THE CHECK SOURCE CAN BE INTEGRATED INTO THE ~~DIGITAL~~ LCRM AS PART OF THE MONITOR
20. ~~THE RADIATION HIGH-HIGH TRIP OR THE DOWNSCALE/INOPERATIVE TRIP SHALL TERMINATE OPERATION OF THE VENTILATION FANS.~~

MPL NO. G11-1010

T63

FIGURE 7.6-5 PROCESS RADIATION MONITORING SYSTEM IED (Sheet 1 of 11)

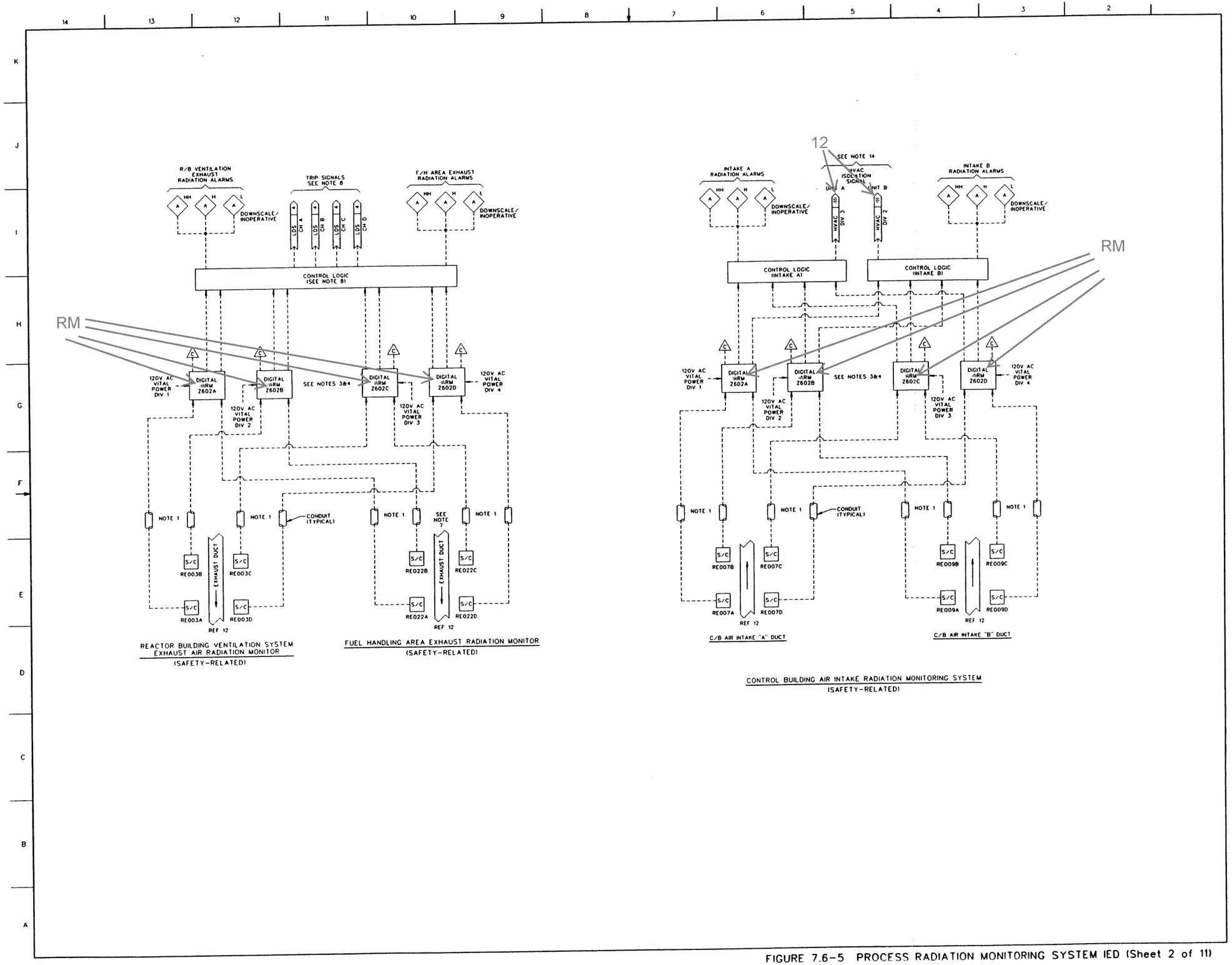

FIGURE 7.6-5 PROCESS RADIATION MONITORING SYSTEM IED (Sheet 2 of 11)

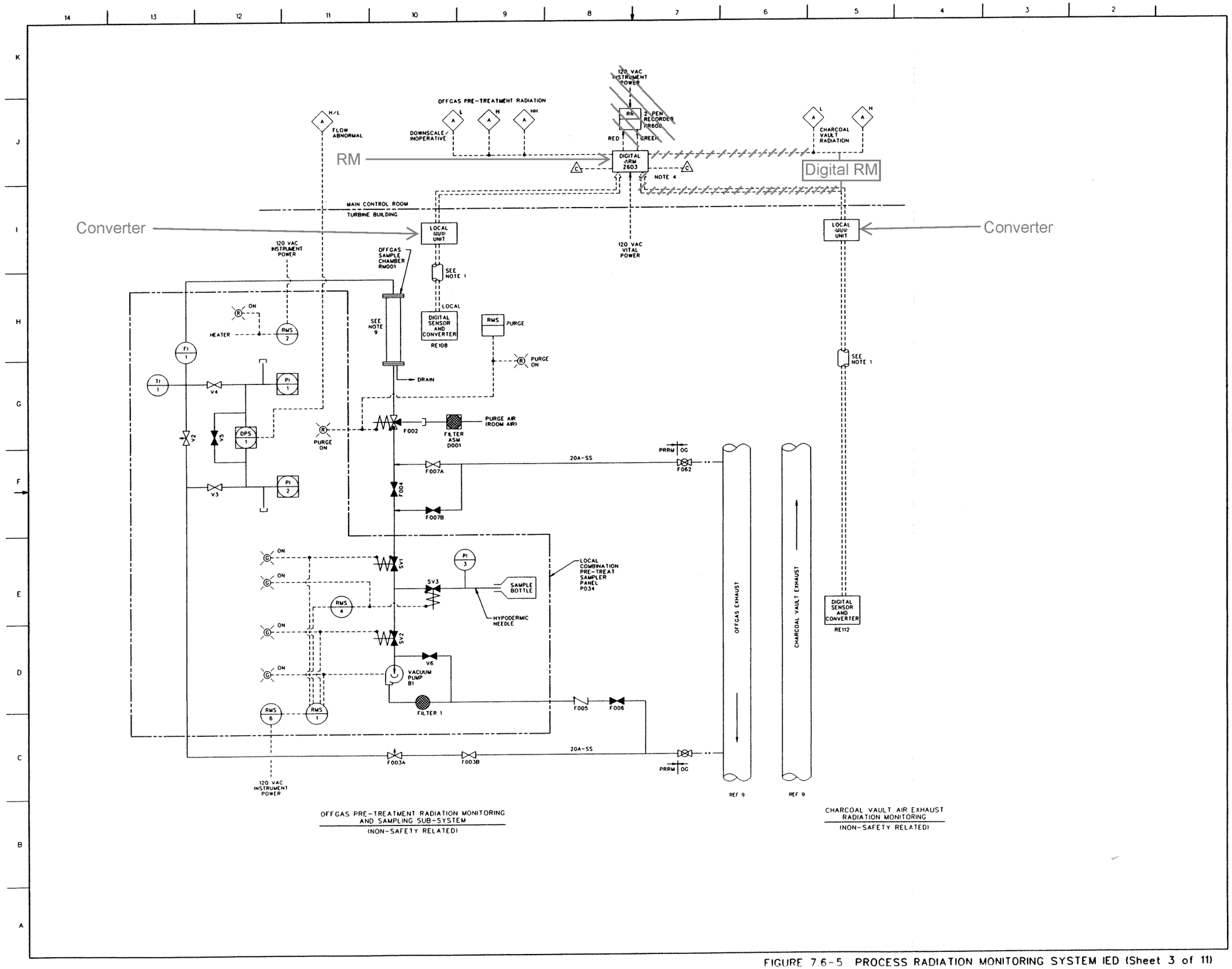

FIGURE 7.6-5 PROCESS RADIATION MONITORING SYSTEM IED (Sheet 3 of 11)

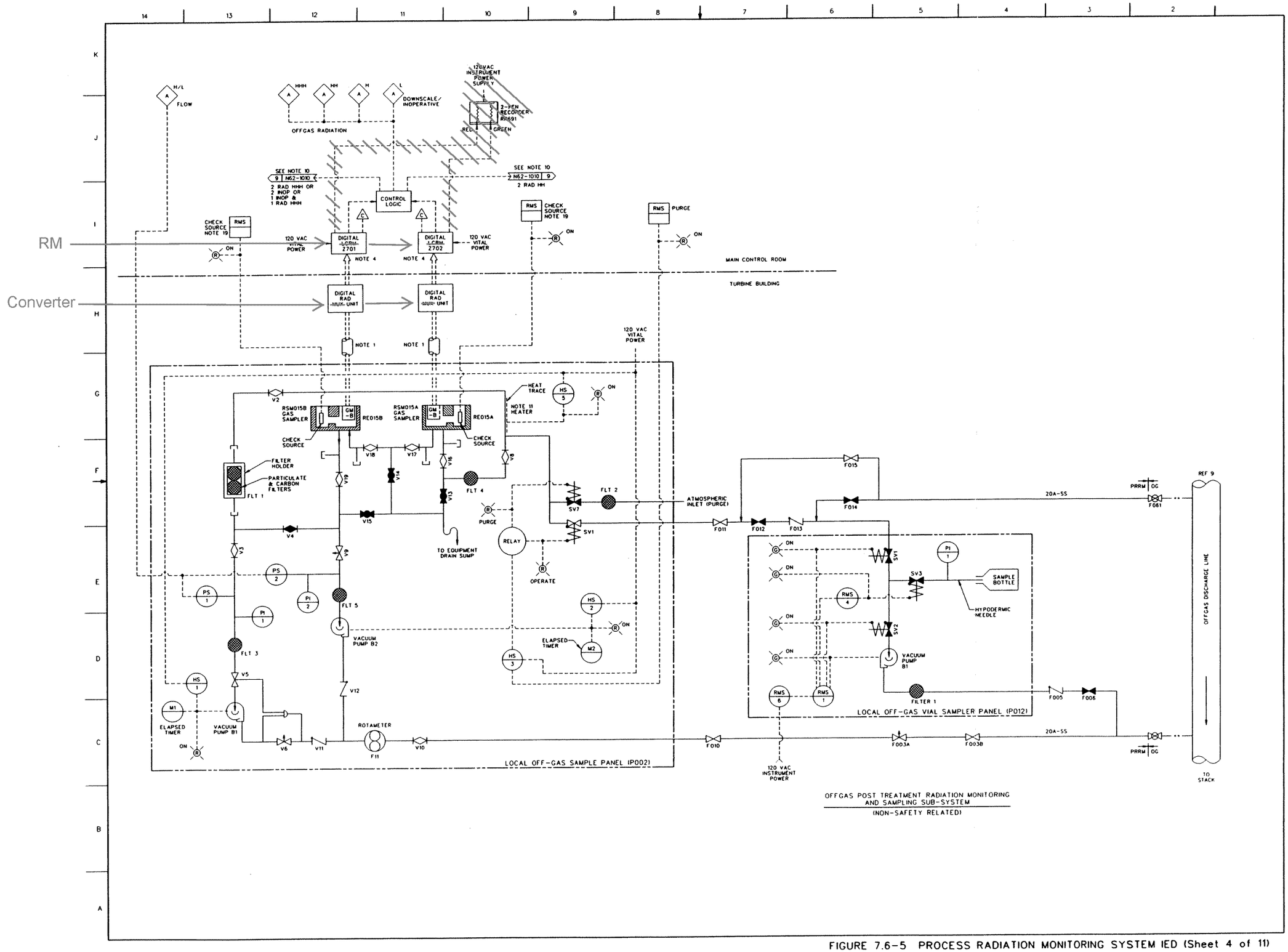

OFFGAS POST TREATMENT RADIATION MONITORING AND SAMPLING SUB-SYSTEM
(NON-SAFETY RELATED)

FIGURE 7.6-5 PROCESS RADIATION MONITORING SYSTEM IED (Sheet 4 of 11)

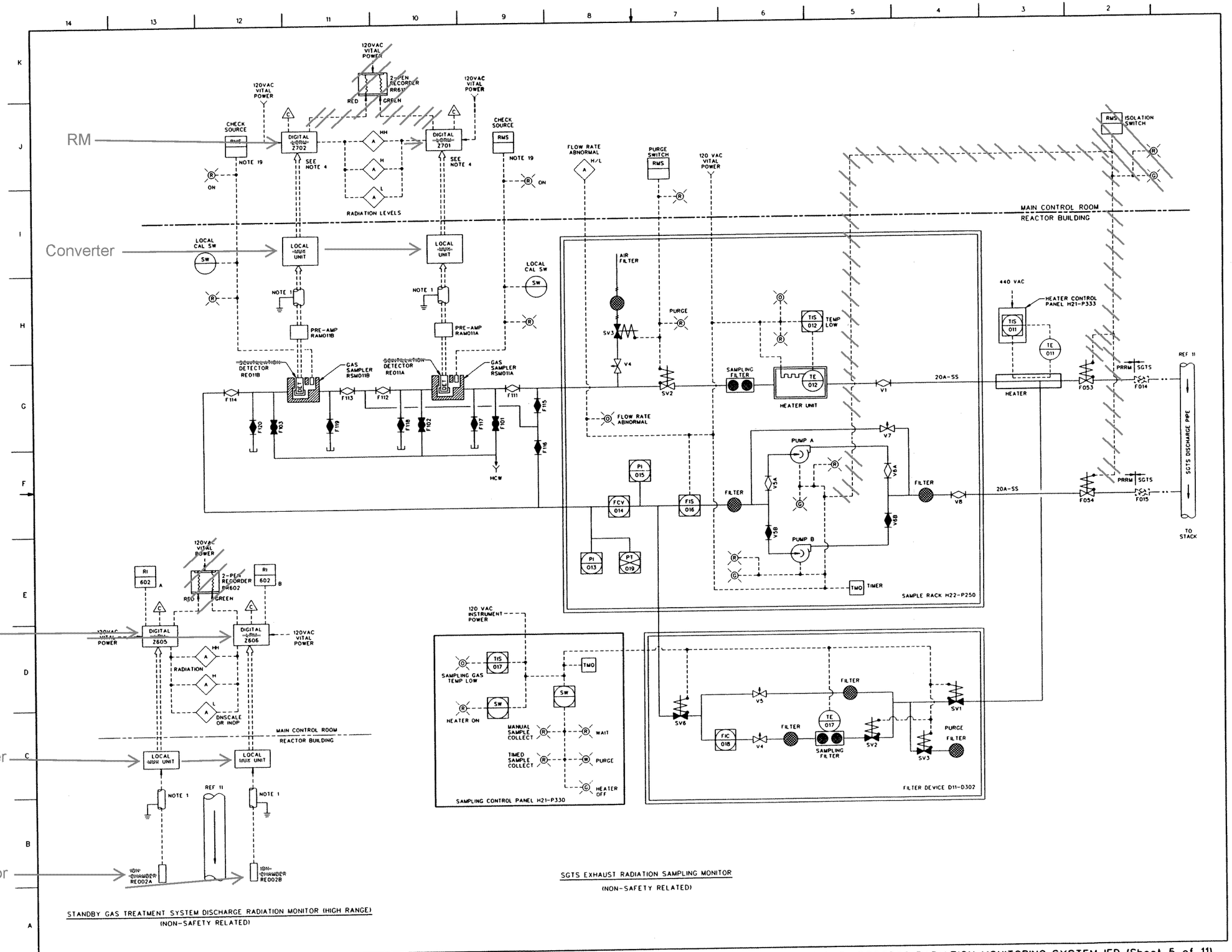

FIGURE 7.6-5 PROCESS RADIATION MONITORING SYSTEM IED (Sheet 5 of 11)

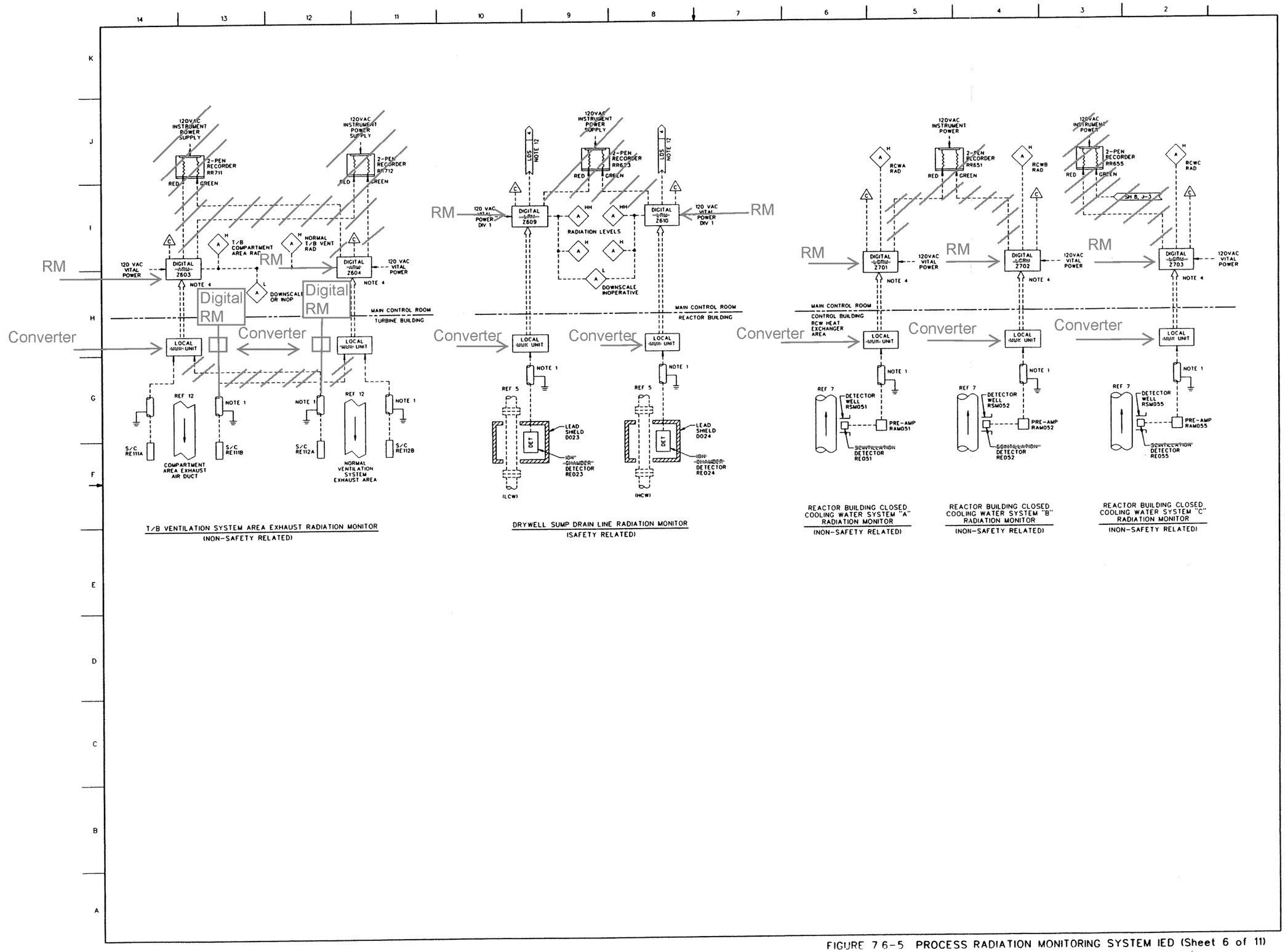

FIGURE 7.6-5 PROCESS RADIATION MONITORING SYSTEM IED (Sheet 6 of 11)

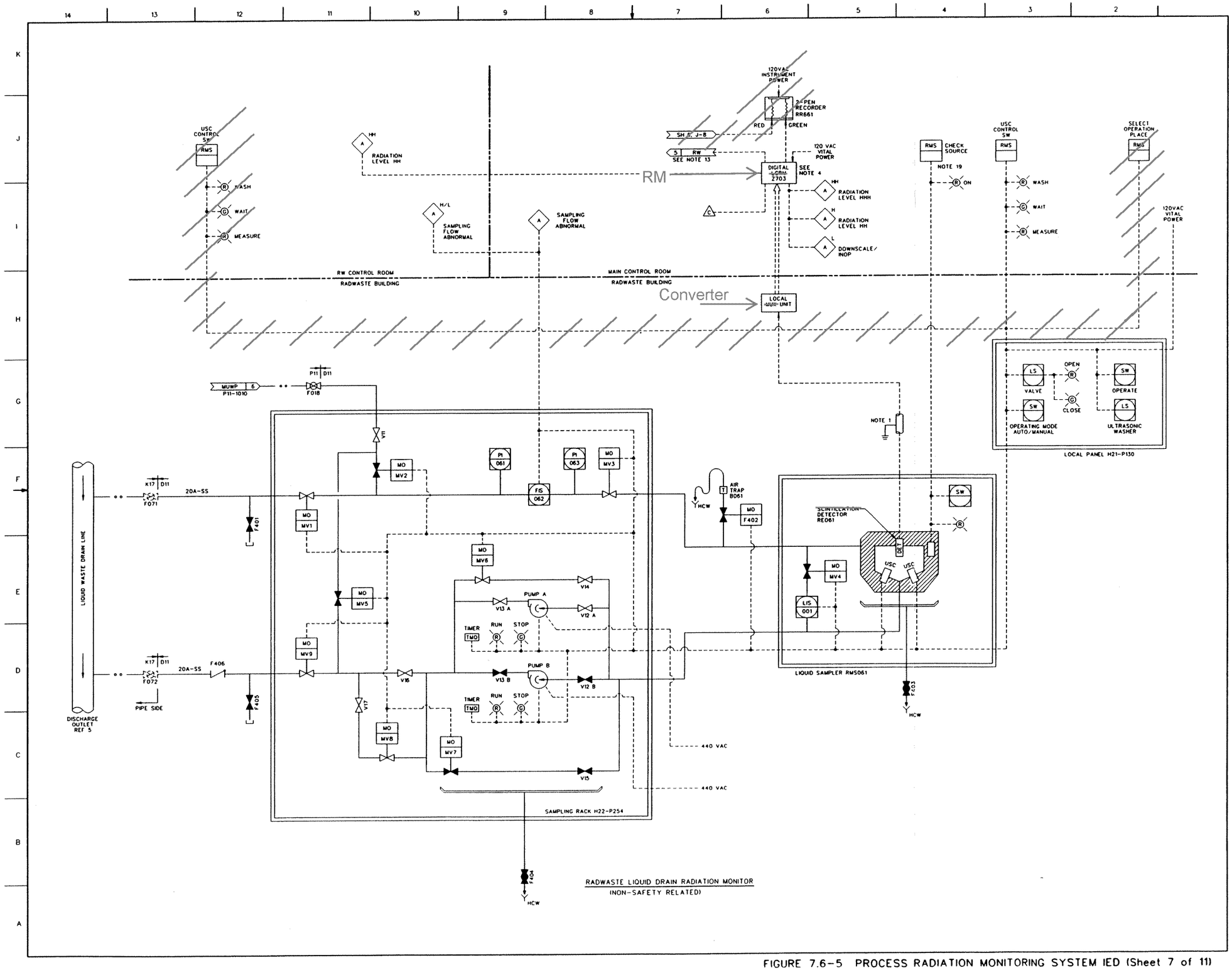

FIGURE 7.6-5 PROCESS RADIATION MONITORING SYSTEM IED (Sheet 7 of 11)

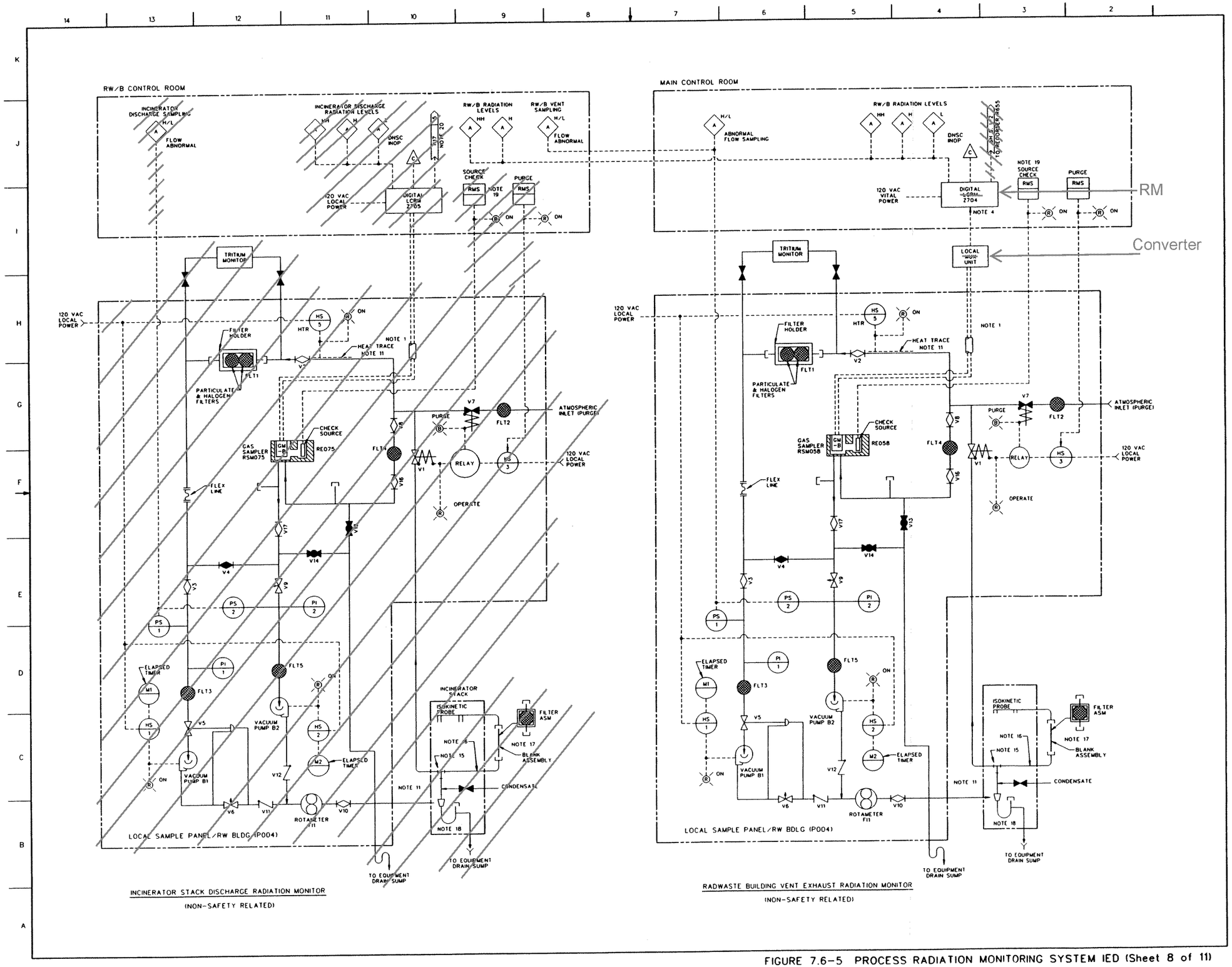

FIGURE 7.6-5 PROCESS RADIATION MONITORING SYSTEM IED (Sheet 8 of 11)

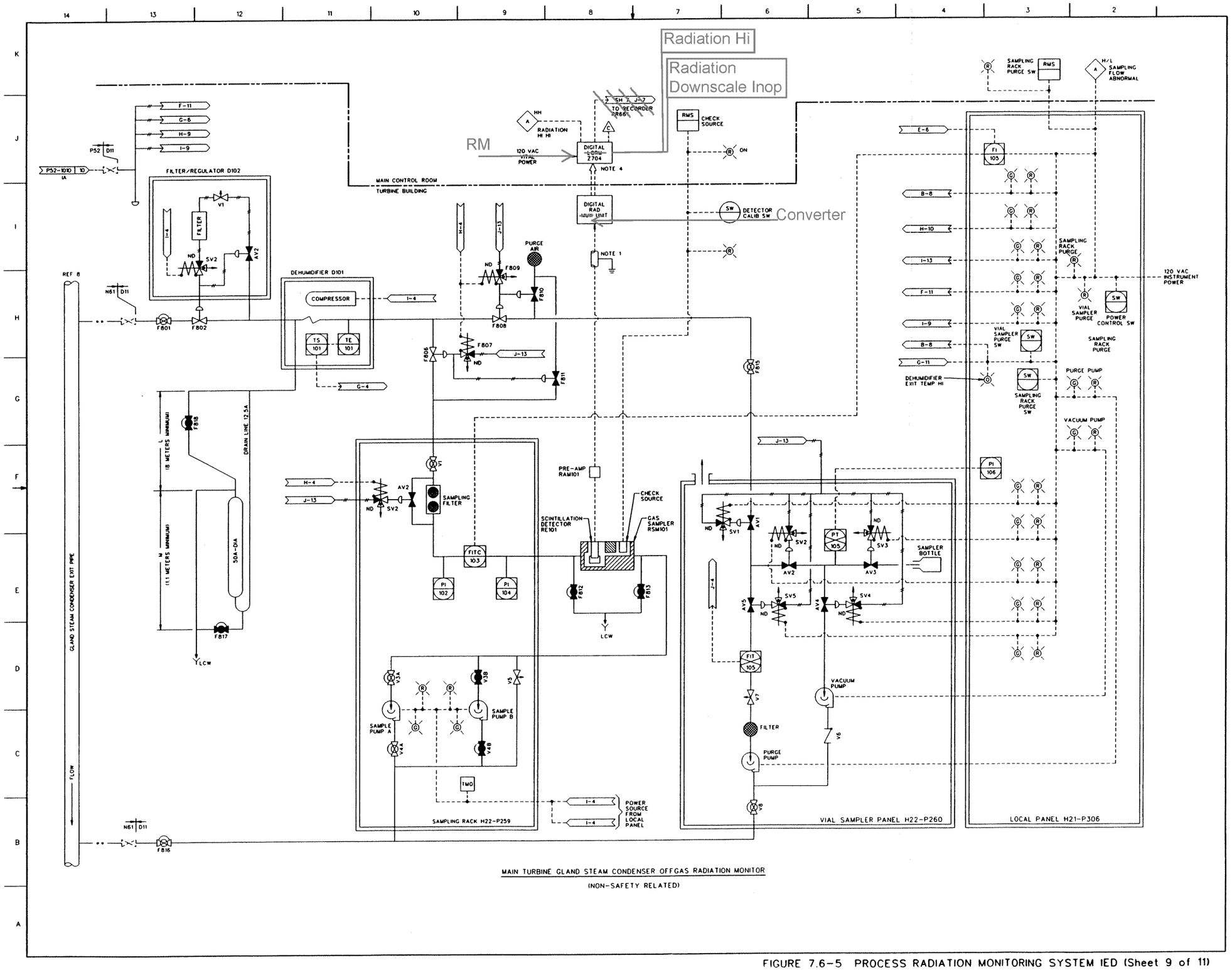

MAIN TURBINE GLAND STEAM CONDENSER OFFGAS RADIATION MONITOR

(NON-SAFETY RELATED)

FIGURE 7.6-5 PROCESS RADIATION MONITORING SYSTEM IED (Sheet 9 of 11)

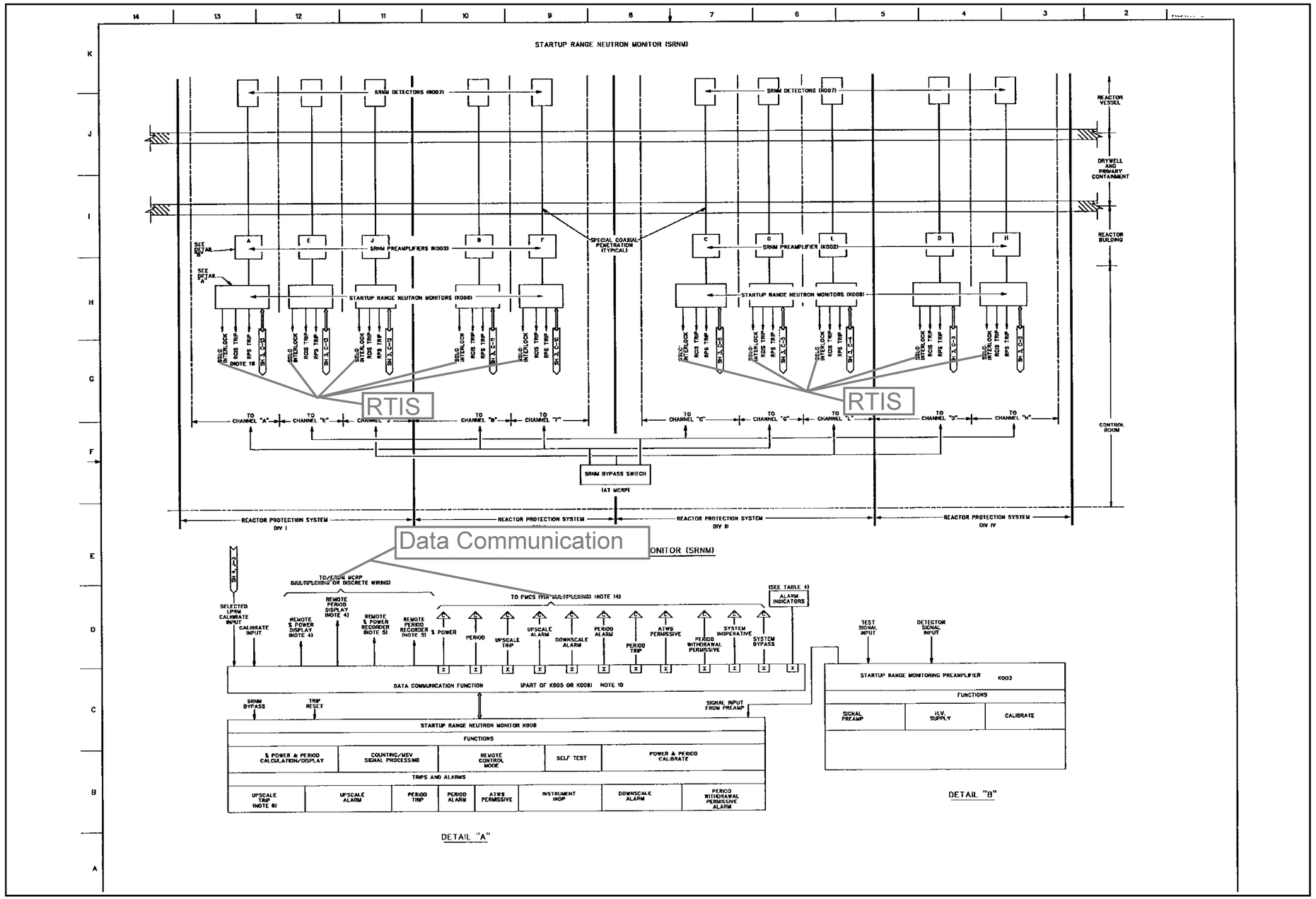

FIGURE 7.6-1 NEUTRON MONITORING SYSTEM IED (Sheet 2 of 4)

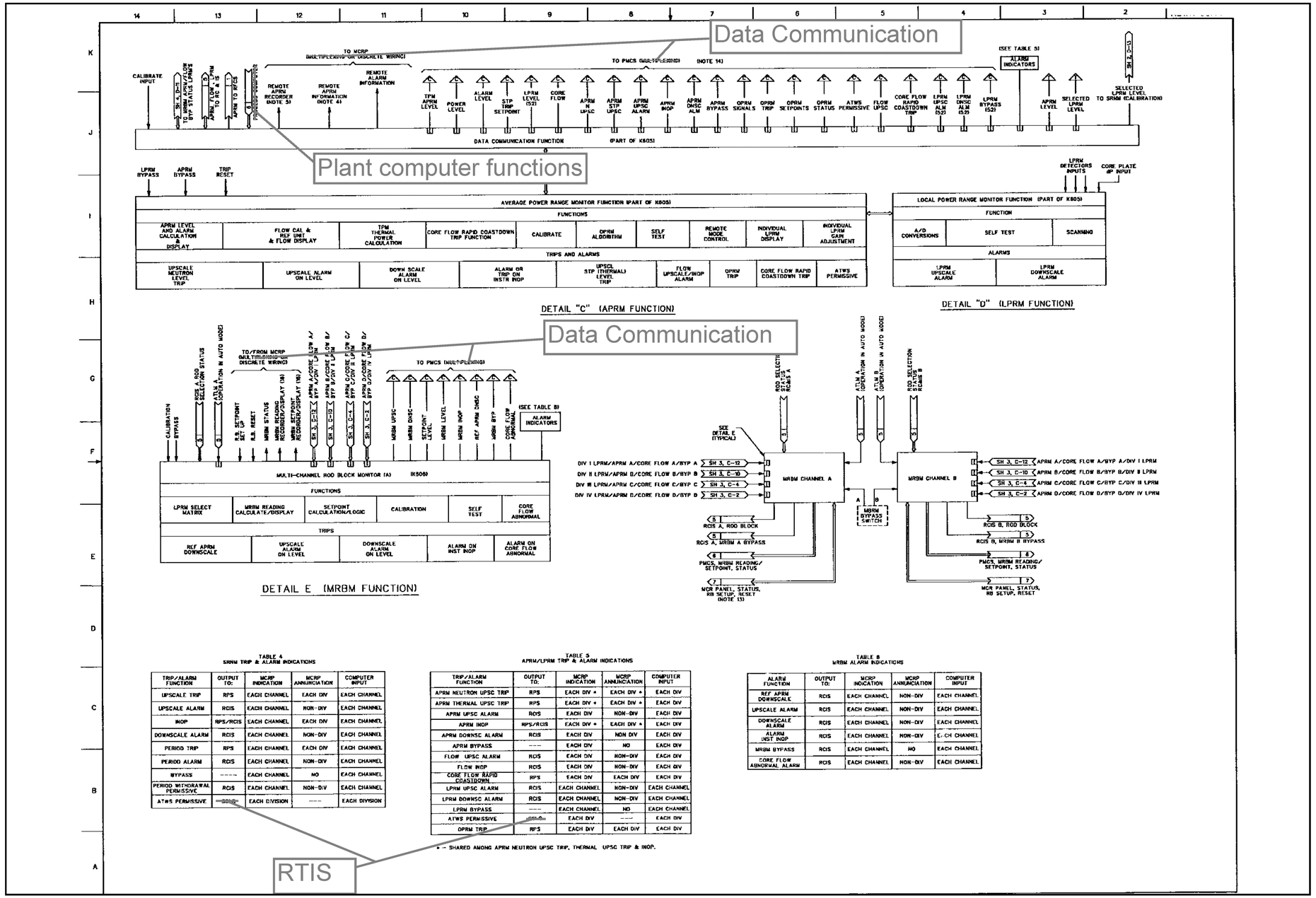

TABLE 4
SRNM TRIP & ALARM INDICATIONS

TRIP/ALARM FUNCTION	OUTPUT TO:	MCRP INDICATION	MCRP ANNUNCIATION	COMPUTER INPUT
UPSCALE TRIP	RPS	EACH CHANNEL	EACH DIV	EACH CHANNEL
UPSCALE ALARM	RCIS	EACH CHANNEL	NON-DIV	EACH CHANNEL
INOP	RPS/RCIS	EACH CHANNEL	EACH DIV	EACH CHANNEL
DOWNSCALE ALARM	RCIS	EACH CHANNEL	NON-DIV	EACH CHANNEL
PERIOD TRIP	RPS	EACH CHANNEL	EACH DIV	EACH CHANNEL
PERIOD ALARM	RCIS	EACH CHANNEL	NON-DIV	EACH CHANNEL
BYPASS	----	EACH CHANNEL	NO	EACH CHANNEL
PERIOD WITHDRAWAL PERMISSIVE	RCIS	EACH CHANNEL	NON-DIV	EACH CHANNEL
ATWS PERMISSIVE	----	EACH DIVISION	---	EACH DIVISION

TABLE 3
APRM/LPRM TRIP & ALARM INDICATIONS

TRIP/ALARM FUNCTION	OUTPUT TO:	MCRP INDICATION	MCRP ANNUNCIATION	COMPUTER INPUT
APRM NEUTRON UPSC TRIP	RPS	EACH DIV *	EACH DIV *	EACH DIV
APRM THERMAL UPSC TRIP	RPS	EACH DIV *	EACH DIV *	EACH DIV
APRM UPSC ALARM	RCIS	EACH DIV	NON-DIV	EACH DIV
APRM INOP	RPS/RCIS	EACH DIV *	EACH DIV *	EACH DIV
APRM DOWNSC ALARM	RCIS	EACH DIV	NON DIV	EACH DIV
APRM BYPASS	---	EACH DIV	NO	EACH DIV
FLOW UPSC ALARM	RCIS	EACH DIV	NON-DIV	EACH DIV
FLOW INOP	RCIS	EACH DIV	NON-DIV	EACH DIV
CORE FLOW RAPID COASTDOWN	RPS	EACH DIV	EACH DIV	EACH DIV
LPRM UPSC ALARM	RCIS	EACH CHANNEL	NON-DIV	EACH CHANNEL
LPRM DOWNSC ALARM	RCIS	EACH CHANNEL	NON-DIV	EACH CHANNEL
LPRM BYPASS	---	EACH CHANNEL	NO	EACH CHANNEL
ATWS PERMISSIVE	----	EACH DIV	---	EACH DIV
OPRM TRIP	RPS	EACH DIV	EACH DIV	EACH DIV

* - SHARED AMONG APRM NEUTRON UPSC TRIP, THERMAL UPSC TRIP & INOP.

TABLE 8
MRBM ALARM INDICATIONS

ALARM FUNCTION	OUTPUT TO:	MCRP INDICATION	MCRP ANNUNCIATION	COMPUTER INPUT
REF APRM DOWNSCALE	RCIS	EACH CHANNEL	NON-DIV	EACH CHANNEL
UPSCALE ALARM	RCIS	EACH CHANNEL	NON-DIV	EACH CHANNEL
DOWNSCALE ALARM	RCIS	EACH CHANNEL	NON-DIV	EACH CHANNEL
ALARM INST INOP	RCIS	EACH CHANNEL	NON-DIV	EACH CHANNEL
MRBM BYPASS	RCIS	EACH CHANNEL	NO	EACH CHANNEL
CORE FLOW ABNORMAL ALARM	RCIS	EACH CHANNEL	NON-DIV	EACH CHANNEL

FIGURE 7.6-1 NEUTRON MONITORING SYSTEM IED (Sheet 4 of 4)

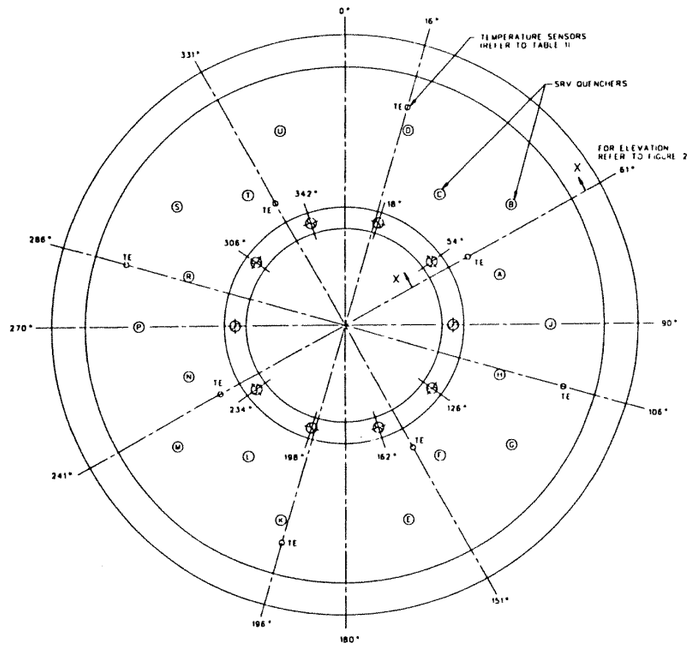

FIGURE 1 INSTRUMENTATION LOCATION DEFINITION

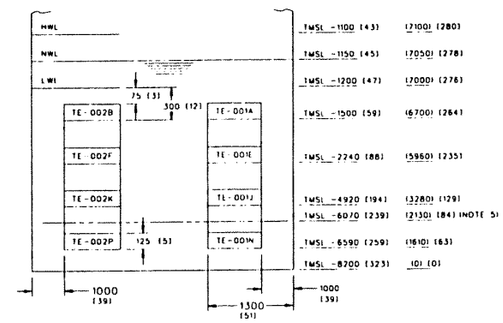

VIEW X-X FROM FIGURE 1
NOTES 2,6,7

FIGURE 2 SENSOR AND ENVELOPE DEFINITION

NOTES

1. DIVISION I AND DIVISION III AND DIVISION II AND DIVISION IV TEMPERATURE SENSORS AT EACH LOCATION SHALL BE SEPARATED BY 150 300 MM (6-12 INCHES)
2. TYPICAL OF DIVISION I AND DIVISION II SENSORS AT AZIMUTHAL LOCATIONS 16° AND 61°. DIVISION III AND DIVISION IV SENSORS ARE NOT SHOWN
3. BULK AVERAGE TEMPERATURE ALARM
4. SIGNALS FROM TE WHICH ARE LOCATED AT THE SAME LEVEL SHALL BE OMITTED FROM AVERAGE TEMPERATURE CALCULATION, WHEN S/P WATER LEVEL DECREASE BELOW SENSOR LEVEL
5. MIDDLE QUENCHER LEVEL
6. TWSL = TYPICAL MEAN SFA LEVEL
7. NUMBER ARE IN MILIMETER EXCEPT (.) WHICH ARE IN INCHES

SUPPLEMENTAL DOCUMENTS UNDER THE FOLLOWING IDENTITIES SHALL BE USED IN CONJUNCTION WITH THIS DRAWING

		REFERENCE DESIGNATOR
1	ATMOSPHERIC CONTROL SYSTEM P&ID	E31-1010
2	REMOTE SHUTDOWN SYSTEM IED	C61-1010
3	RESIDUAL HEAT REMOVAL SYS P&ID	E11-1010
4	PIPING AND INSTRUMENT SYMBOLS DIAGRAM	A10-3030
5	REACTOR PROTECTION SYSTEM IED	C71-1010
6	REACTOR BUILDING COOLING WATER SYS P&ID	P21-1010

TABLE 1 SENSOR DIVISION ASSIGNMENT

	DIVISION I	DIVISION II	DIVISION III	DIVISION IV
16°	TE-001A,E,J,N		TE-001C,G,L,R	
61°		TE-002B,F,K,P		TE-002D,H,M,S
106°		TE-003B,F,K,P		TE-003D,H,M,S
151°	TE-004A,E,J,N		TE-004C,G,L,R	
196°	TE-005A,E,J,N		TE-005C,G,L,R	
241°		TE-006B,F,K,P		TE-006D,H,M,S
286°		TE-007B,F,K,P		TE-007D,H,M,S
331°	TE-008A,E,J,N		TE-008C,G,L,R	

67
142
247
322

MPL NO 153 1010

FIGURE 7.6-11 SUPPRESSION POOL TEMPERATURE MONITORING SYSTEM (1 SHEET OF 3)

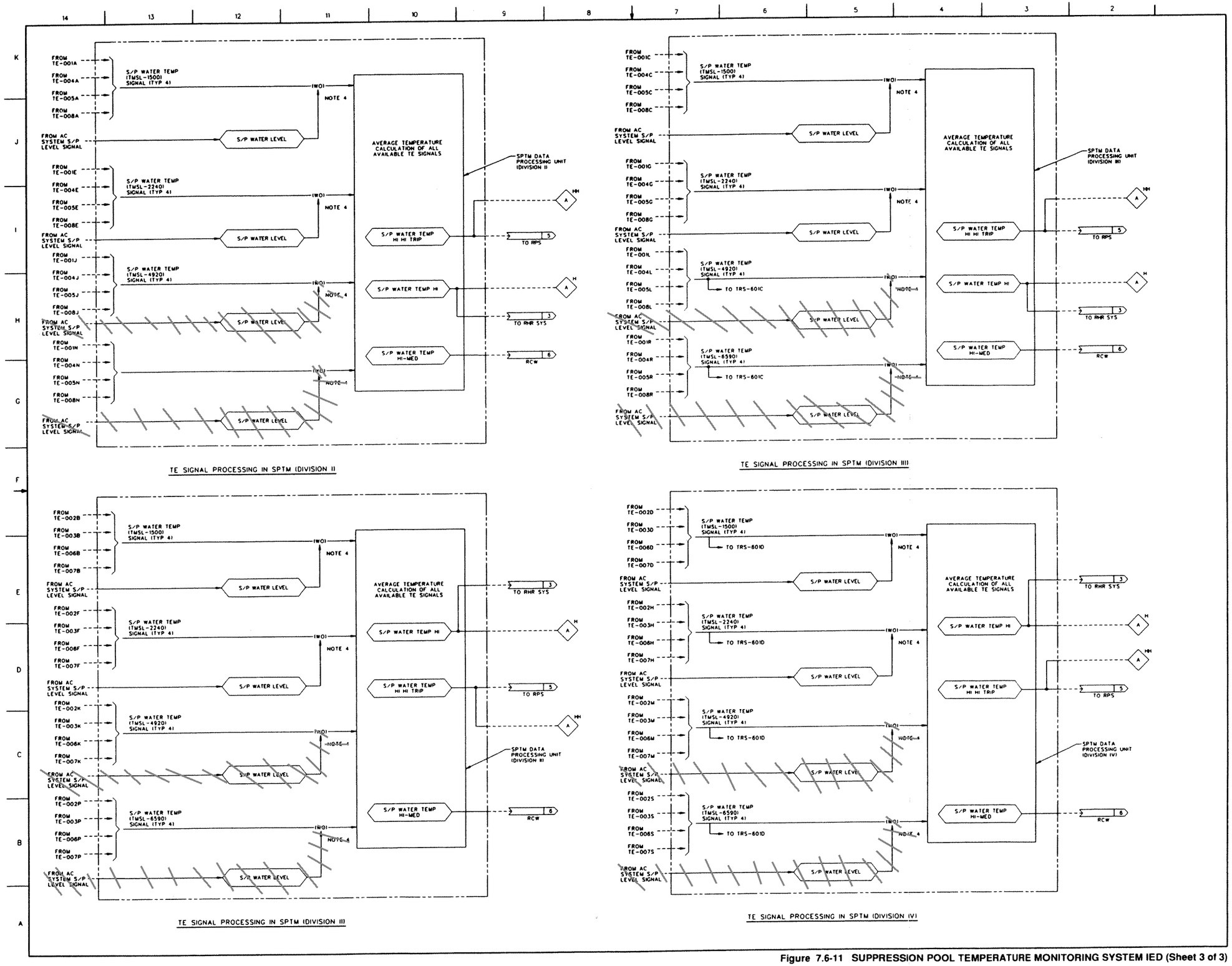

Figure 7.6-11 SUPPRESSION POOL TEMPERATURE MONITORING SYSTEM IED (Sheet 3 of 3)

TABLE 1: ANNUNCIATORS

NUMBER	INDICATION	FUNCTION	SOURCE OF THE SIGNAL	LOCATION
1	ALARM	SUPPRESSION POOL WATER (A) TEMP HIGH	LOGIC OUTPUT	
2	ALARM	SUPPRESSION POOL WATER (B) TEMP HIGH	LOGIC OUTPUT	
3	ALARM	SUPPRESSION POOL WATER (C) TEMP HIGH	LOGIC OUTPUT	
4	ALARM	SUPPRESSION POOL WATER (D) TEMP HIGH	LOGIC OUTPUT	
5	ALARM	SUPPRESSION POOL WATER (A) TEMP HI-HI	LOGIC OUTPUT	
6	ALARM	SUPPRESSION POOL WATER (B) TEMP HI-HI	LOGIC OUTPUT	
7	ALARM	SUPPRESSION POOL WATER (C) TEMP HI-HI	LOGIC OUTPUT	
8	ALARM	SUPPRESSION POOL WATER (D) TEMP HI-HI	LOGIC OUTPUT	

ABREVIATIONS

STPT = SETPOINT
NR = NARROW RANGE
~~WR = WIDE RANGE~~

NOTES:

1. SUPPRESSION POOL TEMPERATURE SIGNALS ARE PROCESSED BY POOL WATER LEVEL SIGNALS. SEE REFERENCE DOC 1.
2. SETPOINTS ARE REFERENCE VALUES.
3. ~~SUM TO DETERMINE NUMBER OF INPUTS (1-4).~~
4. ~~SUM OF UP TO 4 TEMPERATURES.~~
5. ~~AVERAGE OF 12 TO 16 TEMPERATURE INPUTS.~~

3. CALCULATE THE STRING AVERAGE TEMPERATURE (4 TEMP. SENSORS/STRING).
4. CALCULATE THE DIVISIONAL S/P WATER BULK TEMPERATURE (4 STRINGS/DIVISIONS).

SUPPLEMENTAL DOCUMENTS UNDER THE FOLLOWING IDENTITIES ARE TO BE USED IN CONJUNCTION WITH THIS DRAWING.

	REFERENCE DESIGNATOR
1. SUPPRESSION POOL TEMP MONITORING SYS IED	T53-1010
2. INTERLOCK BLOCK DIAGRAM STANDARD	A10-3070
3. RESIDUAL HEAT REMOVAL SYSTEM IBD	E11-1030
4. REACTOR COOLING WATER/ REACTOR SERVICE WATER SYSTEM IBD	P21/P41-1030
5. REACTOR PROTECTION SYSTEM IBD	C71-1030

MPL NO. T53-1030

FIGURE 7.6-12 SUPPRESSION POOL TEMPERATURE MONITORING SYSTEM IBD (Sheet 1 of 6)

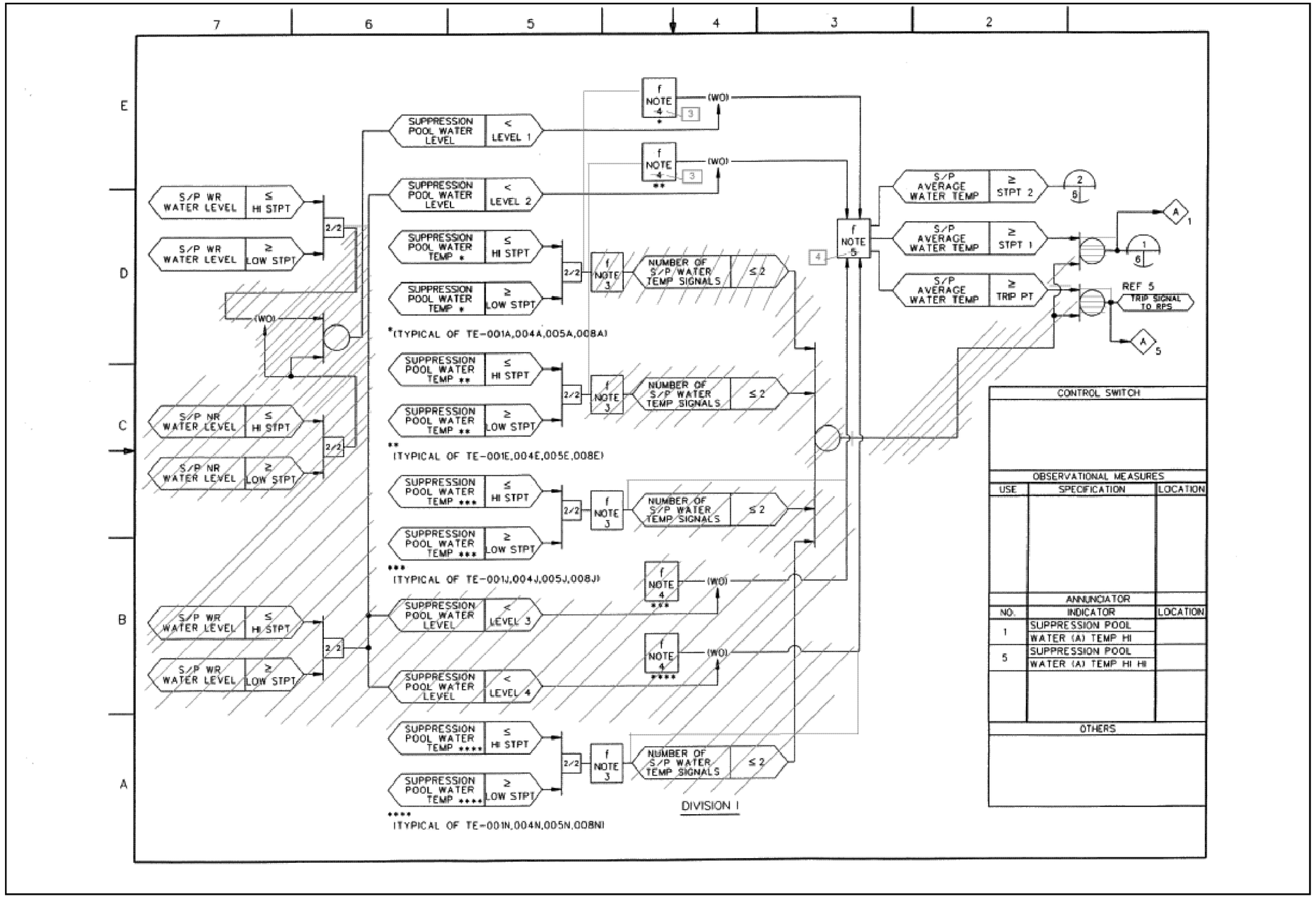

FIGURE 7.6-12 SUPPRESSION POOL TEMPERATURE MONITORING SYSTEM IBD (Sheet 2 of 6)

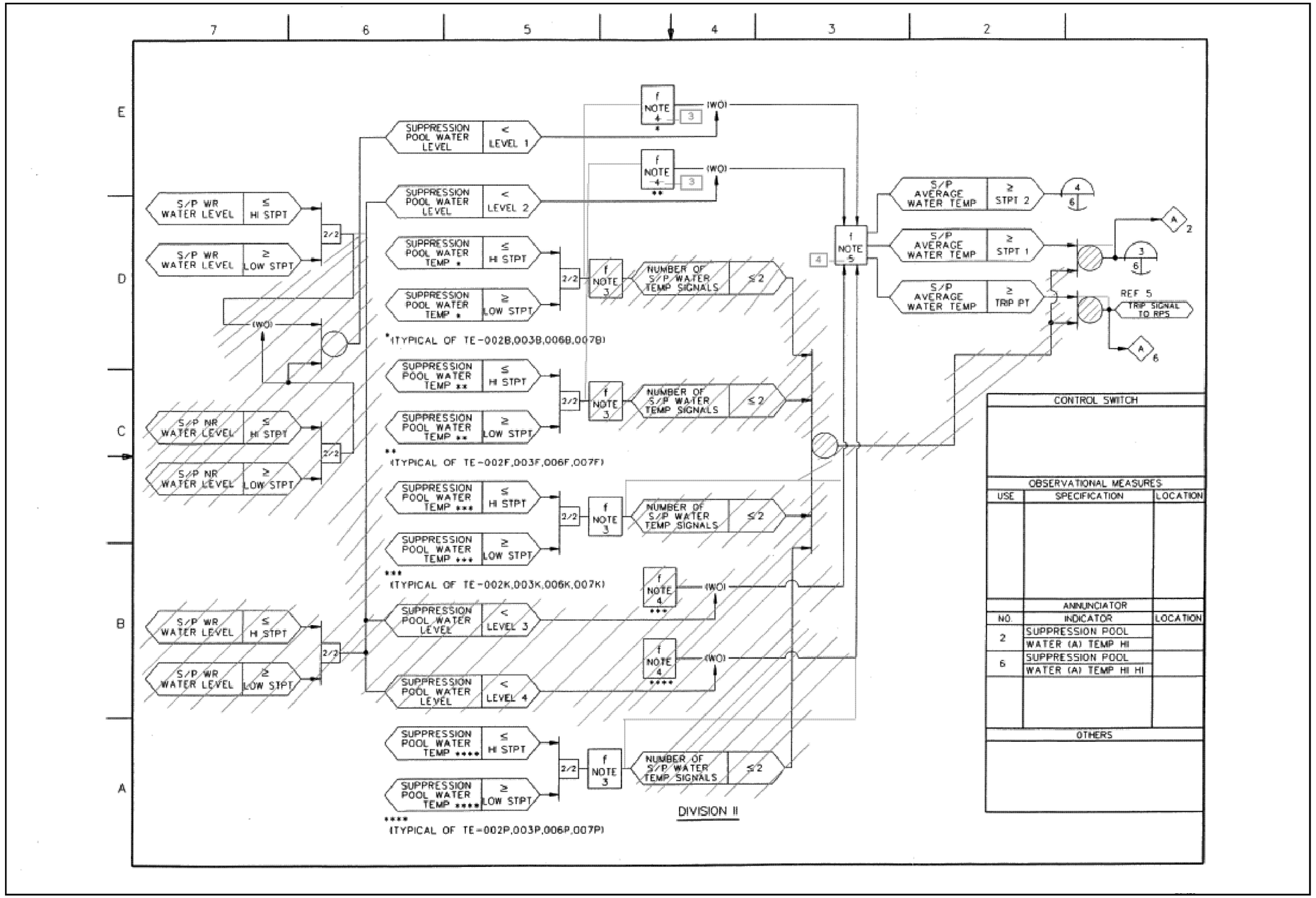

FIGURE 7.6-12 SUPPRESSION POOL TEMPERATURE MONITORING SYSTEM IBD (Sheet 3 of 6)

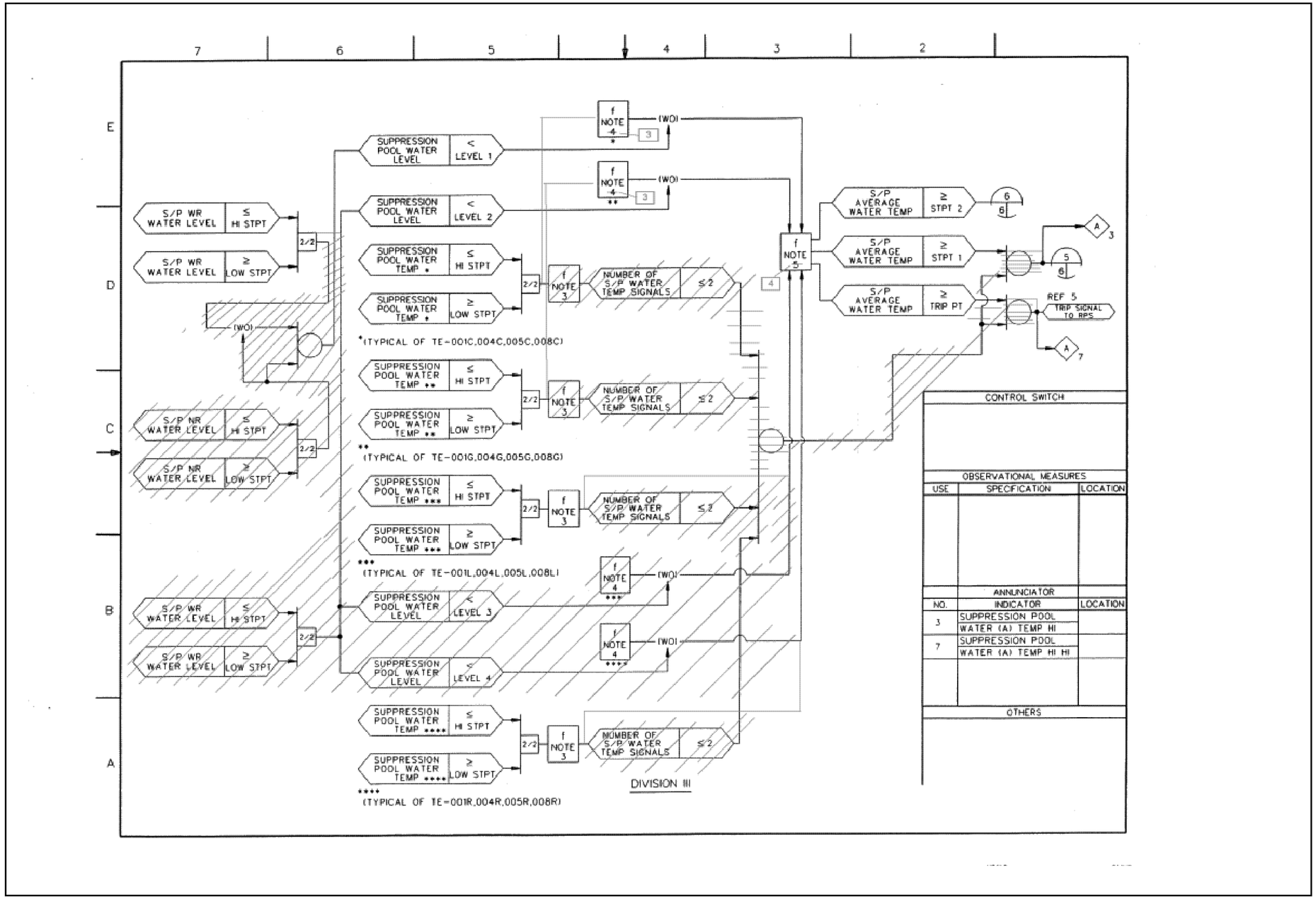

FIGURE 7.6-12 SUPPRESSION POOL TEMPERATURE MONITORING SYSTEM IBD (Sheet 4 of 6)

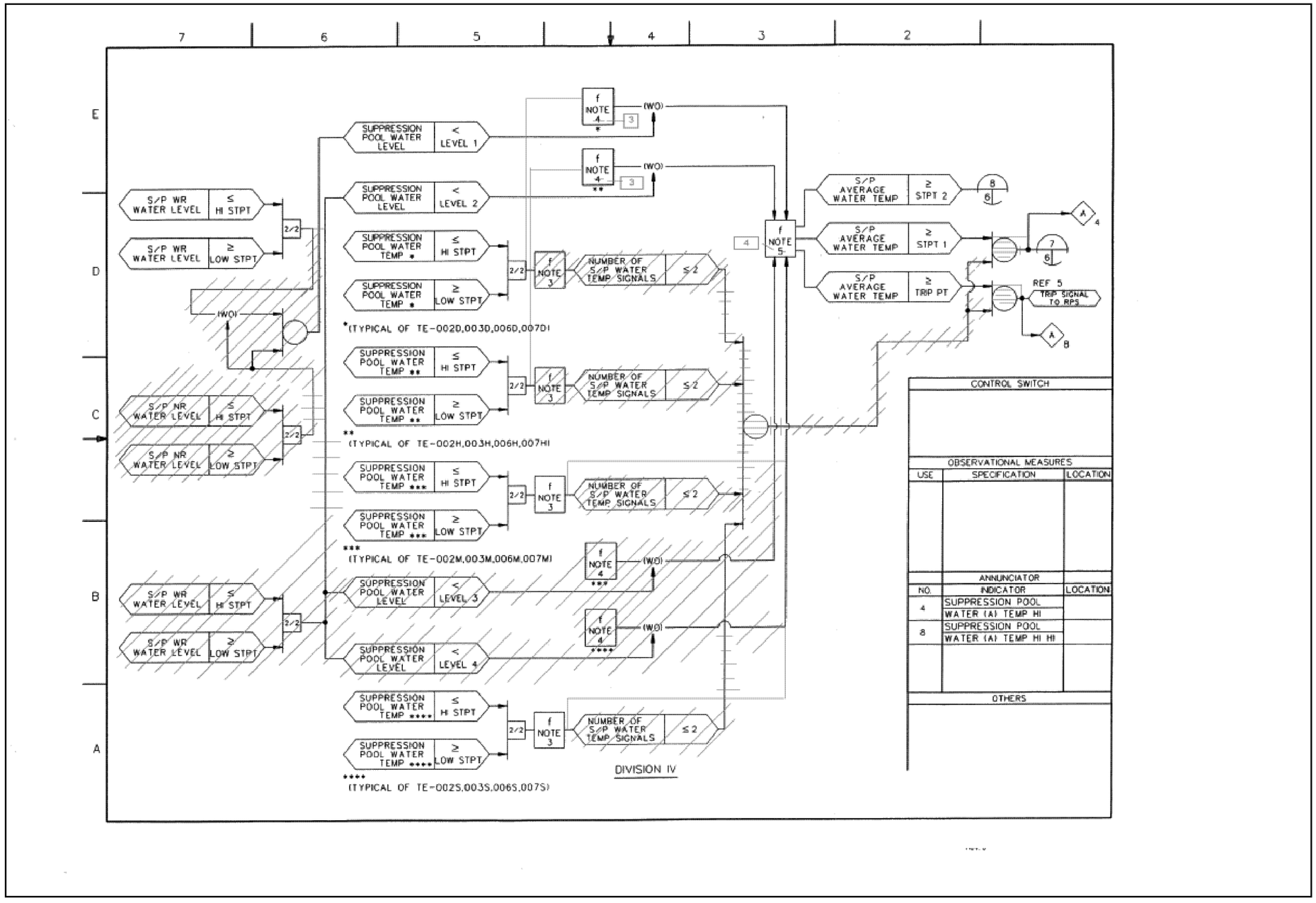

FIGURE 7.6-12 SUPPRESSION POOL TEMPERATURE MONITORING SYSTEM IBD (Sheet 5 of 6)

NOTES:

1. THIS IBD PRESENTS THE BASIC FUNCTIONAL REQUIREMENTS OF THE NEUTRON MONITORING SYSTEM (NMS) OF THE APPLIED PROJECT. IT CONTAINS THE SUBSYSTEMS OF SRNM, APRM & LPRM, ATIP AND MRBM. IT DOES NOT NECESSARILY REFLECT THE ACTUAL PHYSICAL LOCATIONS OF LOGICS TO BE IMPLEMENTED TO THE HARDWARE OR SOFTWARE LEVEL. (FOR INSTANCE, THE LOCATION OF THE SRNM OR APRM CHANNEL BYPASS FUNCTION MAY BE AT DIFFERENT LOCATION OR MORE THAN ONE LOCATION AS SHOWN IN THIS IBD).

2. FAIL SAFE LOGIC: ALL OUTPUT CONNECTIONS FROM LOGIC UNITS EXCEPT ATIP AND MRBM IBD ARE DEFINED AS LOGIC "1" DURING NORMAL REACTOR OPERATION. THEY CHANGE TO LOGIC "0" UPON A TRIP CONDITION. ANY "LOSS OF SIGNAL" CONDITION WILL ALSO CAUSE THE STATE TO BE CHANGED TO "0".

3. ONE RESET SWITCH SHALL BE USED FOR EACH CHANNEL ON THE MCR BACK PANEL.

4. THE PRESENCE OF AN OPERATOR INPUT, SUCH AS RESET, BYPASS, AUTO CALIBRATION, ETC., IMPLIES LOGIC "1".

5. TIME CONSTANT REFERS TO THE FILTER TIME CONSTANT WHERE THE FILTERED SIGNAL IS LAGGED BEHIND THE ORIGINAL SIGNAL BY THIS TIME CONSTANT AFTER SIGNIFICANT TIME ELAPSE. THIS IS SHOWN IN THE LEGEND SECTION.

6. R – S FLIP FLOPS ARE SET AND RESET BY POSITIVE LOGIC.

TRUTH TABLE

R	S	OUTPUT
0	0	PREVIOUS STATE
0	1	1
1	0	0
1	1	0

7. FAIL SAFE LOGIC: EXCEPT ATIP AND MRBM IBD, THE OUTPUT OF THE COMPARATOR IS DEFINED AS ZERO WHEN A TRIP OCCURS (FAIL SAFE LOGIC), I.E., WHEN THE COMPARISON EQUATION IS TRUE. OTHERWISE IT IS "1" DURING NORMAL CONDITION. HOWEVER, ALARMS, ANNUNCIATORS ARE ACTIVATED WITH LOGIC "1".

8. THE FAULT CONDITION RESULTED FROM A CHANNEL SELF-TEST IS LOGIC "0", SO IS THE CONDITION OF AN INSTRUMENT INOPERATIVE TRIP. THE SCOPE OF "CRITICAL SELF TEST" ITEMS IS TO BE REFERENCED IN NMS HARDWARE & SOFTWARE SYSTEM SPEC, C51-4010.

9. SETPOINTS FOR NMS LOGICS (NOMINAL) (I.E., SP 1 TO SP 22, MRBM AND SRNM PERIOD TRIP SETPOINTS) ARE INCLUDED IN AND SHALL BE GOVERNED BY THE NMS SYSTEM DESIGN SPEC, C51-4010.

10. CORE FLOW CONVERSION, FLOW REFERENCE LOGIC AND CORE FLOW RAPID COASTDOWN TRIP ALGORITHMS, MRBM CORE FLOW COMPARISON ALGORITHM AND OPRM TRIP ALGORITHM ARE DEFINED IN THE NMS HARDWARE AND SOFTWARE SYSTEM SPEC, C51-4010. ALSO THE TIME DELAY IN ATIP AUTO PARK LOGIC IS REFERENCED IN THIS DOCUMENT.

11. FOR ATIP IBD, IN DRIVE MECHANISM LOGIC,
X = 1 INDICATES "MOVE", X = 0 INDICATES "STOP",
Y = 1 INDICATES "FORWARD", Y = 0 INDICATES "REVERSE"
Z = 1 INDICATES "FAST", Z = 0 INDICATES "SLOW"

12. FOR ATIP IBD, THE DESCRIPTION OF AUTO MECHANISM IS PROVIDED.

13. STATUS INDICATORS CAN BE APPLIED BY ELECTRO LUMINESCENT TYPE OR CATHODE RAY TUBE DISPLAY, ETC., WHICH ARE INSTALLED ON THE UNITS. THE NOTE "LOCAL" REFERS TO CONTROL ROOM BACK BACK; THE NOTE "MCRP" REFERS TO MAIN CONTROL ROOM OPERATOR MAIN PANELS.

14. INDICATIONS IN MAIN CONTROL ROOM PANEL (MCRP) CAN BE PROVIDED USING THE NMS SIGNALS VIA THE PERFORMANCE MONITORING AND CONTROL SYSTEM (PMCS) OF THE ~~PROCESS COMPUTER~~, OR DIRECTLY FROM THE NMS.

Plant computer functions

15. SRNM PERIOD WITHDRAWAL PERMISSIVE SIGNALS TO APRS ARE FOR INTERRUPT OF AUTOMATED CONTROL ROD WITHDRAWAL DURING AUTOMATED OPERATION.

16. THE OR GATE IS LOCATED IN THE MCRP SYSTEM.

SUPPLEMENTAL DOCUMENTS UNDER THE FOLLOWING IDENTITIES ARE TO BE USED IN CONJUNCTION WITH THIS DRAWING.

		MPL NO.
1.	AUTOMATIC POWER REGULATOR SYS, IBD	C82-1030
2.	ROD CONTROL & INFORMATION SYS, IBD	C11-1030
3.	REACTOR PROTECTION SYSTEM, IBD	C71-1030
4.	RECIRCULATION FLOW CONTROL SYS, IED	C81-1040
5.	ROD CONTROL & INFORMATION SYS, IED	C11-1040
6.	NEUTRON MONITORING SYSTEM, IED	C51-1040
7.	LEAK DETECTION AND ISOLATION SYS, IBD	E31-1030
8.	SAFETY SYSTEM LOGIC & CONTROL SYSTEM IBD	C74-1030

SUPPORTING DOCUMENTS	MPL NO.
1. INTERLOCK BLOCK DIAGRAM (IBD) STANDARDS	A10-1030

LEGEND:

1. FILTERED TIME CONSTANT

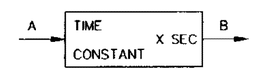

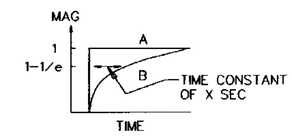

ABBREVIATIONS

NMS-NEUTRON MONITORING SYSTEM
RPS- REACTOR PROTECTION SYSTEM
SRNM-STARTUP RANGE NEUTRON MONITOR
LPRM-LOCAL POWER RANGE MONITOR
APRM-AVERAGE POWER RANGE MONITOR
ATIP-AUTOMATED TRAVERSING IN-CORE PROBE
MRBM-MULTI CHANNEL ROD BLOCK MONITOR
RC&IS-ROD CONTROL & INFORMATION SYSTEM
MCRP-MAIN CONTROL ROOM PANEL
PMCS-PERFORMANCE MONITORING CONTROL SYSTEM
ATCF-AUTOMATED TIP CONTROL FUNCTION
OPRM – OSCILLATION POWER RANGE MONITOR
ATWS – ANTICIPATED TRANSIENT WITHOUT SCRAM
UPSC-UPSCALE
INOP-INOPERABLE
DNSC-DOWNSCALE

MPL NO. C51-1030

FIGURE 7.6-2 NEUTRON MONITORING SYSTEM IBD (Sheet 1 of 28)

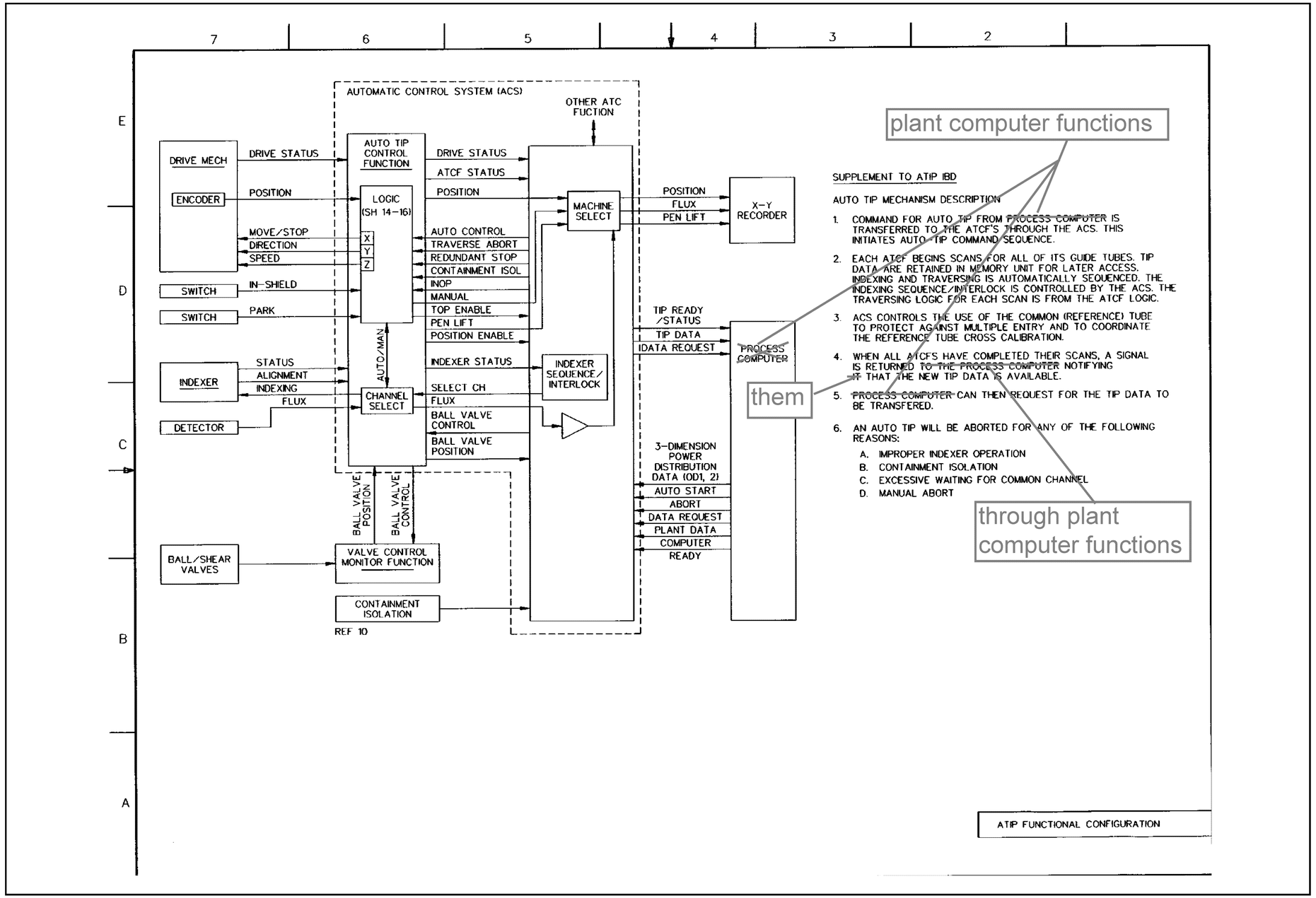

FIGURE 7.6-2 NEUTRON MONITORING SYSTEM IBD (Sheet 14 of 28)

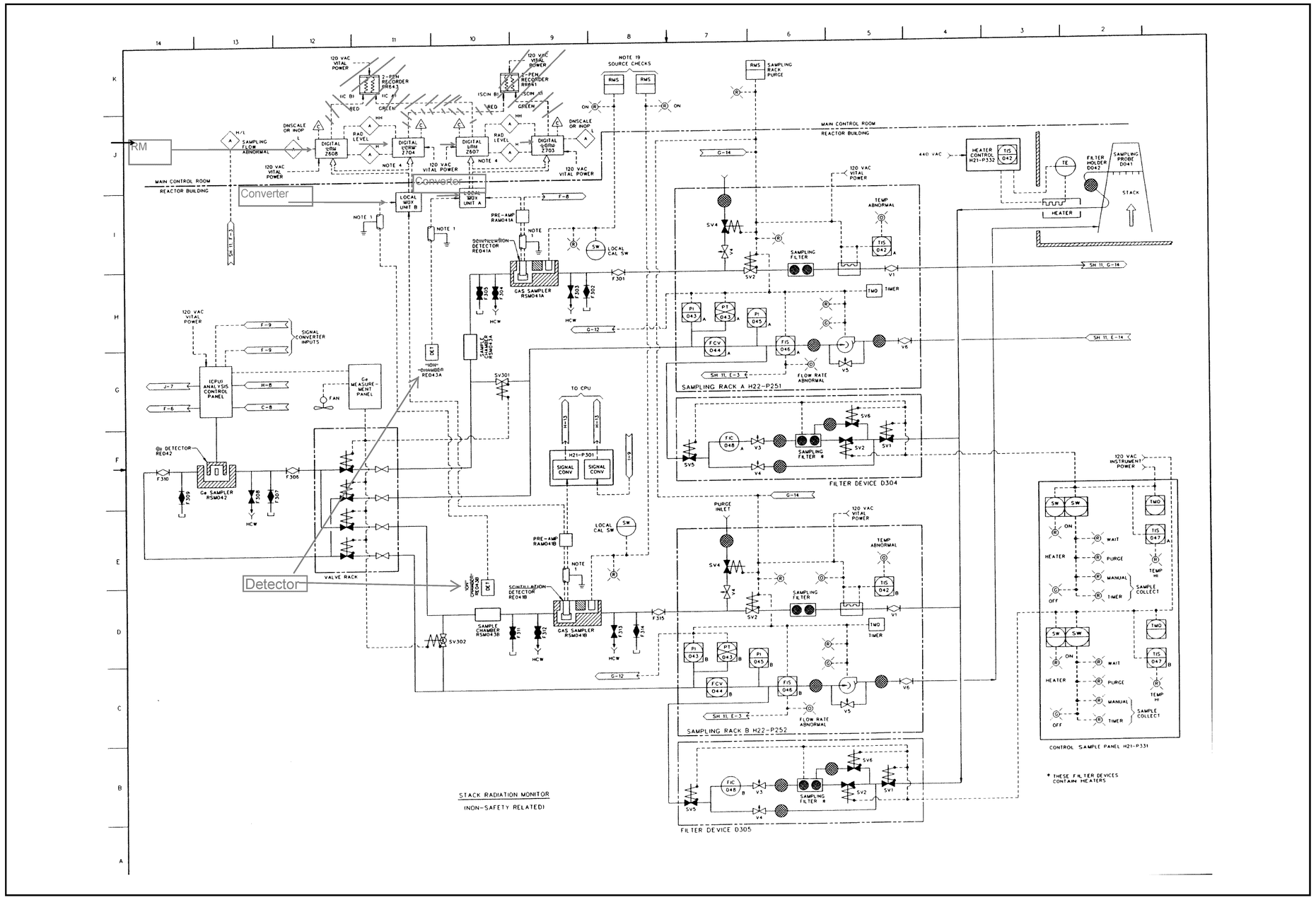

FIGURE 7.6-5 PROCESS RADIATION MONITORING SYSTEM IED (Sheet 10 of 11)

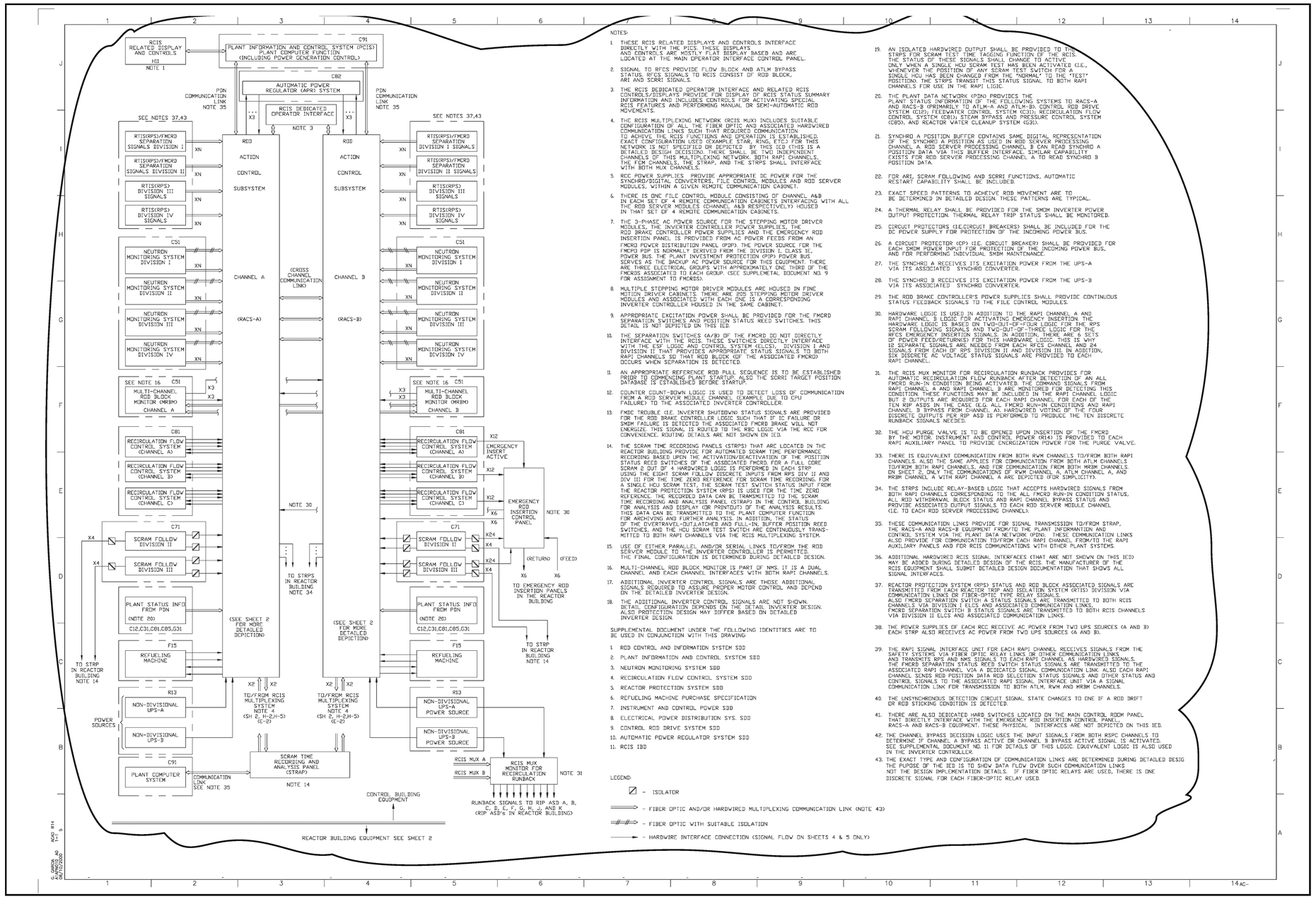

NOTES:

1. THESE RCIS RELATED DISPLAYS AND CONTROLS INTERFACE DIRECTLY WITH THE PCIS. THESE DISPLAYS AND CONTROLS ARE MOSTLY FLAT DISPLAY BASED AND ARE LOCATED AT THE MAIN OPERATOR INTERFACE CONTROL PANEL.

2. SIGNAL TO RFCS PROVIDE FLOW BLOCK AND ATLM BYPASS STATUS. RFCS SIGNALS TO RCIS CONSIST OF ROD BLOCK, ARI AND SCRRI SIGNALS.

3. THE RCIS DEDICATED OPERATOR INTERFACE AND RELATED RCIS CONTROLS/DISPLAYS PROVIDE FOR DISPLAY OF RCIS STATUS SUMMARY INFORMATION AND INCLUDES CONTROLS FOR ACTIVATING SPECIAL RCIS FEATURES AND PERFORMING MANUAL OR SEMI-AUTOMATIC ROD MOVEMENTS.

4. THE RCIS MULTIPLEXING NETWORK (RCIS MUX) INCLUDES SUITABLE CONFIGURATION OF ALL THE FIBER OPTIC AND ASSOCIATED HARDWIRED COMMUNICATION LINKS SUCH THAT REQUIRED COMMUNICATION TO ACHIVE THE RCIS FUNCTIONS AND OPERATION IS ESTABLISHED. EXACT CONFIGURATION USED (EXAMPLE STAR, RING, ETC.) FOR THIS NETWORK IS NOT SPECIFIED OR DEPICTED BY THIS IED (THIS IS A DETAILED DESIGN DECISION). THERE SHALL BE TWO INDEPENDENT CHANNELS OF THIS MULTIPLEXING NETWORK. BOTH RAPI CHANNELS, THE FEM CHANNELS, THE STRAP, AND THE STRPS SHALL INTERFACE WITH BOTH MUX CHANNELS.

5. RCC POWER SUPPLIES PROVIDE APPROPRIATE DC POWER FOR THE SYNCHRO/DIGITAL CONVERTERS, FILE CONTROL MODULES AND ROD SERVER MODULES, WITHIN A GIVEN REMOTE COMMUNICATION CABINET.

6. THERE IS ONE FILE CONTROL MODULE CONSISTING OF CHANNEL A&B IN EACH SET OF 4 REMOTE COMMUNICATION CABINETS INTERFACING WITH ALL THE ROD SERVER MODULES (CHANNEL A&B RESPECTIVELY) HOUSED IN THAT SET OF 4 REMOTE COMMUNICATION CABINETS.

7. THE 3-PHASE AC POWER SOURCE FOR THE STEPPING MOTOR DRIVER MODULES, THE INVERTER CONTROLLER POWER SUPPLIES, THE ROD BRAKE CONTROLLER POWER SUPPLIES AND THE EMERGENCY ROD INSERTION PANEL IS PROVIDED FROM AC POWER FEEDS FROM AN FMCRD POWER DISTRIBUTION PANEL (PDP). THE POWER SOURCE FOR THE FMCRD PDP IS NORMALLY DERIVED FROM THE DIVISION I, CLASS 1E, POWER BUS. THE PLANT INVESTMENT PROTECTION (PIP) POWER BUS SERVES AS THE BACKUP AC POWER SOURCE FOR THIS EQUIPMENT. THERE ARE THREE ELECTRICAL GROUPS WITH APPROXIMATELY ONE THIRD OF THE FMCRDS ASSOCIATED TO EACH GROUP. (SEE SUPPLEMETAL DOCUMENT NO. 9 FOR ASSIGNMENT TO FMCRDS).

8. MULTIPLE STEPPING MOTOR DRIVER MODULES ARE HOUSED IN FINE MOTION DRIVER CABINETS. THERE ARE 205 STEPPING MOTOR DRIVER MODULES AND ASSOCIATED WITH EACH ONE IS A CORRESPONDING INVERTER CONTROLLER HOUSED IN THE SAME CABINET.

9. APPROPRIATE EXCITATION POWER SHALL BE PROVIDED FOR THE FMCRD SEPARATION SWITCHES AND POSITION STATUS REED SWITCHES. THIS DETAIL IS NOT DEPICTED ON THIS IED.

10. THE SEPARATION SWITCHES (A/B) OF THE FMCRD DO NOT DIRECTLY INTERFACE WITH THE RCIS. THESE SWITCHES DIRECTLY INTERFACE WITH THE ESF LOGIC AND CONTROL SYSTEM (ELCS). DIVISION I AND DIVISION II THAT PROVIDES APPROPRIATE STATUS SIGNALS TO BOTH RAPI CHANNELS SO THAT ROD BLOCK (OF THE ASSOCIATED FMCRD) OCCURS WHEN SEPARATION IS DETECTED.

11. AN APPROPRIATE REFERENCE ROD PULL SEQUENCE IS TO BE ESTABLISHED PRIOR TO COMMENCING PLANT STARTUP. ALSO THE SCRRI TARGET POSITION DATABASE IS ESTABLISHED BEFORE STARTUP.

12. COUNTER COUNT-DOWN LOGIC IS USED TO DETECT LOSS OF COMMUNICATION FROM A ROD SERVER MODULE CHANNEL (EXAMPLE DUE TO CPU FAILURE) TO THE ASSOCIATED INVERTER CONTROLLER.

13. FMDC TROUBLE (I.E. INVERTER SHUTDOWN) STATUS SIGNALS ARE PROVIDED FOR THE ROD BRAKE CONTROLLER LOGIC SUCH THAT IF IC FAILURE OR SMDM FAILURE IS DETECTED THE ASSOCIATED FMCRD BRAKE WILL NOT ENERGIZE. THIS SIGNAL IS ROUTED TO THE RBC LOGIC VIA THE RCC FOR CONVENIENCE. ROUTING DETAILS ARE NOT SHOWN IN IED.

14. THE SCRAM TIME RECORDING PANELS (STRPS) THAT ARE LOCATED IN THE REACTOR BUILDING PROVIDE FOR AUTOMATED SCRAM TIME PERFORMANCE RECORDING BASED UPON THE ACTIVATION/DEACTIVATION OF THE POSITION STATUS REED SWITCHES OF THE ASSOCIATED FMCRD FOR A FULL CORE SCRAM & OUT OF 4 HARDWIRED LOGIC IS PERFORMED IN EACH STRP USING THE EIGHT SCRAM FOLLOW DISCRETE INPUTS FROM RPS DIV II AND DIV III FOR THE TIME ZERO REFERENCE FOR SCRAM TIME RECORDING. FOR A SINGLE HCU SCRAM TEST, THE SCRAM TEST SWITCH STATUS INPUT FROM THE REACTOR PROTECTION SYSTEM (RPS) IS USED FOR THE TIME ZERO REFERENCE. THE RECORDED DATA CAN BE TRANSMITTED TO THE SCRAM TIME RECORDING AND ANALYSIS PANEL (STRAP) IN THE CONTROL BUILDING FOR ANALYSIS AND DISPLAY (OR PRINTOUT) OF THE ANALYSIS RESULTS. THIS DATA CAN BE TRANSMITTED TO THE PLANT COMPUTER FUNCTION FOR ARCHIVING AND FURTHER ANALYSIS. IN ADDITION, THE STATUS OF THE OVERTRAVEL-OUT/LATCHED AND FULL-IN, BUFFER POSITION REED SWITCHES, AND THE HCU SCRAM TEST SWITCH ARE CONTINUOUSLY TRANSMITTED TO BOTH RAPI CHANNELS VIA THE RCIS MULTIPLEXING SYSTEM.

15. USE OF EITHER PARALLEL AND/OR SERIAL LINKS TO/FROM THE ROD SERVER MODULE TO THE INVERTER CONTROLLER IS PERMITTED. THE FINAL CONFIGURATION IS DETERMINED DURING DETAILED DESIGN.

16. MULTI-CHANNEL ROD BLOCK MONITOR IS PART OF NMS. IT IS A DUAL CHANNEL AND EACH CHANNEL INTERFACES WITH BOTH RAPI CHANNELS.

17. ADDITIONAL INVERTER CONTROL SIGNALS ARE THOSE ADDITIONAL SIGNALS REQUIRED TO ASSURE PROPER MOTOR CONTROL AND DEPEND ON THE DETAILED INVERTER DESIGN.

18. THE ADDITIONAL INVERTER CONTROL SIGNALS ARE NOT SHOWN. DETAIL CONFIGURATION DEPENDS ON THE DETAIL INVERTER DESIGN. ALSO PROTECTION DESIGN MAY DIFFER BASED ON DETAILED INVERTER DESIGN.

SUPPLEMENTAL DOCUMENT UNDER THE FOLLOWING IDENTITIES ARE TO BE USED IN CONJUNCTION WITH THIS DRAWING

1. ROD CONTROL AND INFORMATION SYSTEM SDD
2. PLANT INFORMATION AND CONTROL SYSTEM SDD
3. NEUTRON MONITORING SYSTEM SDD
4. RECIRCULATION FLOW CONTROL SYSTEM SDD
5. REACTOR PROTECTION SYSTEM SDD
6. REFUELING MACHINE PURCHASE SPECIFICATION
7. INSTRUMENT AND CONTROL POWER SDD
8. ELECTRICAL POWER DISTRIBUTION SYS. SDD
9. CONTROL ROD DRIVE SYSTEM SDD
10. AUTOMATIC POWER REGULATOR SYSTEM SDD
11. RCIS IBD

LEGEND:

- ISOLATOR
- FIBER OPTIC AND/OR HARDWIRED MULTIPLEXING COMMUNICATION LINK (NOTE 43)
- FIBER OPTIC WITH SUITABLE ISOLATION
- HARDWIRE INTERFACE CONNECTION (SIGNAL FLOW ON SHEETS 4 & 5 ONLY)

19. AN ISOLATED HARDWIRED OUTPUT SHALL BE PROVIDED TO THE STRPS FOR SCRAM TEST TIME TAGGING FUNCTION OF THE RCIS. THE STATUS OF THESE SIGNALS SHALL CHANGE TO ACTIVE ONLY WHEN A SINGLE HCU SCRAM TEST HAS BEEN ACTIVATED (I.E., WHENEVER THE POSITION OF ANY SCRAM TEST SWITCH FOR A SINGLE HCU HAS BEEN CHANGED FROM THE "NORMAL" TO THE "TEST" POSITION). THE STRPS TRANSIT THIS STATUS SIGNAL TO BOTH RAPI CHANNELS FOR USE IN THE RAPI LOGIC.

20. THE PLANT DATA NETWORK (PDN) PROVIDES THE PLANT STATUS INFORMATION OF THE FOLLOWING SYSTEMS TO RACS-A AND RACS-B (PRIMARILY TO ATLM-A AND ATLM-B). CONTROL ROD DRIVE SYSTEM (C12); FEEDWATER CONTROL SYSTEM (C31); RECIRCULATION FLOW CONTROL SYSTEM (C81); STEAM BYPASS AND PRESSURE CONTROL SYSTEM (C85), AND REACTOR WATER CLEANUP SYSTEM (G31).

21. SYNCHRO A POSITION BUFFER CONTAINS SAME DIGITAL REPRESENTATION OF THE SYNCHRO A POSITION AS USED IN ROD SERVER PROCESSING CHANNEL A. ROD SERVER PROCESSING CHANNEL B CAN READ SYNCHRO A POSITION DATA VIA THIS BUFFER INTERFACE; SIMILAR CAPABILITY EXISTS FOR ROD SERVER PROCESSING CHANNEL A TO READ SYNCHRO B POSITION DATA.

22. FOR ARI, SCRAM FOLLOWING AND SCRRI FUNCTIONS, AUTOMATIC RESTART CAPABILITY SHALL BE INCLUDED.

23. EXACT SPEED PATTERNS TO ACHEIVE ROD MOVEMENT ARE TO BE DETERMINED IN DETAILED DESIGN. THESE PATTERNS ARE TYPICAL.

24. A THERMAL RELAY SHALL BE PROVIDED FOR THE SMDM INVERTER POWER OUTPUT PROTECTION. THERMAL RELAY TRIP STATUS SHALL BE MONITORED.

25. CIRCUIT PROTECTORS (I.E.CIRCUIT BREAKERS) SHALL BE INCLUDED FOR THE DC POWER SUPPLY FOR PROTECTION OF THE INCOMING POWER BUS.

26. A CIRCUIT PROTECTOR (CP) (I.E. CIRCUIT BREAKER) SHALL BE PROVIDED FOR EACH SMDM POWER INPUT FOR PROTECTION OF THE INCOMING POWER BUS, AND FOR PERFORMING INDIVIDUAL SMDM MAINTENANCE.

27. THE SYNCHRO A RECEIVES ITS EXCITATION POWER FROM THE UPS-A VIA ITS ASSOCIATED SYNCHRO CONVERTER.

28. THE SYNCHRO B RECEIVES ITS EXCITATION POWER FROM THE UPS-B VIA ITS ASSOCIATED SYNCHRO CONVERTER.

29. THE ROD BRAKE CONTROLLER'S POWER SUPPLIES SHALL PROVIDE CONTINUOUS STATUS FEEDBACK SIGNALS TO THE FILE CONTROL MODULES.

30. HARDWARE LOGIC IS USED IN ADDITION TO THE RAPI CHANNEL A AND RAPI CHANNEL B LOGIC FOR ACTIVATING EMERGENCY INSERTION. THE HARDWARE LOGIC IS BASED ON TWO-OUT-OF-FOUR LOGIC FOR THE RPS SCRAM FOLLOWING SIGNALS AND TWO-OUT-OF-THREE LOGIC FOR THE RFCS EMERGENCY INSERTION SIGNALS. IN ADDITION, THERE ARE 6 SETS OF POWER FEED/RETURNS) FOR THIS HARDWARE LOGIC. THIS IS WHY 12 SEPARATE SIGNALS ARE NEEDED FROM EACH RFCS CHANNEL AND 24 SIGNALS FROM EACH OF RPS DIVISION II AND DIVISION III. IN ADDITION, SIX DISCRETE AC VOLTAGE STATUS SIGNALS ARE PROVIDED TO EACH RAPI CHANNEL.

31. THE RCIS MUX MONITOR FOR RECIRCULATION RUNBACK PROVIDES FOR AUTOMATIC RECIRCULATION FLOW RUNBACK AFTER DETECTION OF AN ALL FMCRD RUN-IN CONDITION BEING ACTIVATED. THE COMMAND SIGNALS FROM RAPI CHANNEL A AND RAPI CHANNEL B ARE MONITORED FOR DETECTING THIS CONDITION. THESE SIGNALS MAY BE INCLUDED IN THE RAPI CHANNEL LOGIC BUT 2 OUTPUTS ARE REQUIRED FOR EACH RAPI CHANNEL FOR EACH OF THE TEN RIP ASDS IN THE CASE (E.G. ALL FMCRD RUN-IN CONDITIONS AND RAPI CHANNEL B BYPASS FROM CHANNEL A). HARDWIRED VOTING OF THE FOUR DISCRETE OUTPUTS PER RIP ASD IS PERFORMED TO PRODUCE THE TEN DISCRETE RUNBACK SIGNALS NEEDED.

32. THE HCU PURGE VALVE IS TO BE OPENED UPON INSERTION OF THE FMCRD BY THE MOTOR, INSTRUMENT AND CONTROL POWER (R14) IS PROVIDED TO EACH RAPI AUXILIARY PANEL TO PROVIDE ENERGIZATION POWER FOR THE PURGE VALVE.

33. THERE IS EQUIVALENT COMMUNICATION FROM BOTH RWM CHANNELS TO/FROM BOTH RAPI CHANNELS. ALSO THE SAME APPLIES FOR COMMUNICATION FROM BOTH ATLM CHANNELS TO/FROM BOTH RAPI CHANNELS, AND FOR COMMUNICATION FROM BOTH MRBM CHANNELS. ON SHEET 2, ONLY THE COMMUNICATIONS OF RWM CHANNEL A, ATLM CHANNEL A, AND MRBM CHANNEL A WITH RAPI CHANNEL A ARE DEPICTED (FOR SIMPLICITY).

34. THE STRPS INCLUDE RELAY-BASED LOGIC THAT ACCEPTS HARDWIRED SIGNALS FROM BOTH RAPI CHANNELS CORRESPONDING TO THE ALL FMCRD RUN-IN CONDITION STATUS, ALL ROD WITHDRAWAL BLOCK STATUS AND RAPI CHANNEL BYPASS STATUS AND PROVIDE ASSOCIATED OUTPUT SIGNALS TO EACH ROD SERVER MODULE CHANNEL (I.E. TO EACH ROD SERVER PROCESSING CHANNEL).

35. THESE COMMUNICATION LINKS PROVIDE FOR SIGNAL TRANSMISSION TO/FROM STRAP, THE RACS-A AND RACS-B EQUIPMENT FROM/TO THE PLANT INFORMANTION AND CONTROL SYSTEM VIA THE PLANT DATA NETWORK (PDN). THESE COMMUNICATION LINKS ALSO PROVIDE FOR COMMUNICATION TO/FROM EACH RAPI CHANNEL FROM/TO THE RAPI AUXILIARY PANELS AND FOR RCIS COMMUNICATIONS WITH OTHER PLANT SYSTEMS.

36. ADDITIONAL HARDWIRED RCIS SIGNAL INTERFACES (THAT ARE NOT SHOWN ON THIS IED) MAY BE ADDED DURING DETAILED DESIGN OF THE RCIS. THE MANUFACTURER OF THE RCIS EQUIPMENT SHALL SUBMIT DETAILED DESIGN DOCUMENTATION THAT SHOWS ALL SIGNAL INTERFACES.

37. REACTOR PROTECTION SYSTEM (RPS) STATUS AND ROD BLOCK ASSOCIATED SIGNALS ARE TRANSMITTED FROM EACH REACTOR TRIP AND ISOLATION SYSTEM (RTIS) DIVISION VIA COMMUNICATION LINKS OR FIBER-OPTIC TYPE RELAY SIGNALS. ALSO FMCRD SEPARATION SWITCH A STATUS SIGNALS ARE TRANSMITTED TO BOTH RCIS CHANNELS VIA DIVISION I ELCS AND ASSOCIATED COMMUNICATION LINKS. FMCRD SEPARATION SWITCH B STATUS SIGNALS ARE TRANSMITTED TO BOTH RCIS CHANNELS VIA DIVISION II ELCS AND ASSOCIATED COMMUNICATION LINKS.

38. THE POWER SUPPLIES OF EACH RCC RECEIVE AC POWER FROM TWO UPS SOURCES (A AND B) EACH STRP ALSO RECEIVES AC POWER FROM TWO UPS SOURCES (A AND B).

39. THE RAPI SIGNAL INTERFACE UNIT FOR EACH RAPI CHANNEL RECEIVES SIGNALS FROM THE SAFETY SYSTEMS VIA FIBER OPTIC RELAY LINKS OR OTHER COMMUNICATION LINKS AND TRANSMITS RPS AND NMS SIGNALS TO EACH RAPI CHANNEL AS HARDWIRED SIGNALS. THE FMCRD SEPARATION STATUS REED SWITCH STATUS SIGNALS ARE TRANSMITTED TO THE ASSOCIATED RAPI CHANNEL VIA A DEDICATED SIGNAL COMMUNICATION LINK. ALSO EACH RAPI CHANNEL SENDS ROD POSITION DATA ROD SELECTION STATUS SIGNALS AND OTHER STATUS AND CONTROL SIGNALS TO THE ASSOCIATED RAPI SIGNAL INTERFACE UNIT VIA A SIGNAL COMMUNICATION LINK FOR TRANSMISSION TO BOTH ATLM, RWM AND MRBM CHANNELS.

40. THE UNSYNCHRONOUS DETECTION CIRCUIT SIGNAL STATE CHANGES TO ONE IF A ROD DRIFT OR ROD STICKING CONDITION IS DETECTED.

41. THERE ARE ALSO DEDICATED HARD SWITCHES LOCATED ON THE MAIN CONTROL ROOM PANEL THAT DIRECTLY INTERFACE WITH THE EMERGENCY ROD INSERTION CONTROL PANEL, RACS-A AND RACS-B EQUIPMENT. THESE PHYSICAL INTERFACES ARE NOT DEPICTED ON THIS IED.

42. THE CHANNEL BYPASS DECISION LOGIC USES THE INPUT SIGNALS FROM BOTH RSPC CHANNELS TO DETERMINE IF CHANNEL A BYPASS ACTIVE OR CHANNEL B BYPASS ACTIVE SIGNAL IS ACTIVATED. SEE SUPPLEMENTAL DOCUMENT NO. 11 FOR DETAILS OF THIS LOGIC. EQUIVALENT LOGIC IS ALSO USED IN THE INVERTER CONTROLLER.

43. THE EXACT TYPE AND CONFIGURATION OF COMMUNICATION LINKS ARE DETERMINED DURING DETAILED DESIG THE PURPOSE OF THE IED IS TO SHOW DATA FLOW OVER SUCH COMMUNICATION LINKS NOT THE DESIGN IMPLEMENTATION DETAILS. IF FIBER OPTIC RELAYS ARE USED, THERE IS ONE DISCRETE SIGNAL FOR EACH FIBER-OPTIC RELAY USED.

FIGURE 7.7-2 ROD CONTROL AND INFORMATION SYSTEM IED (Sheet 1 of 5)

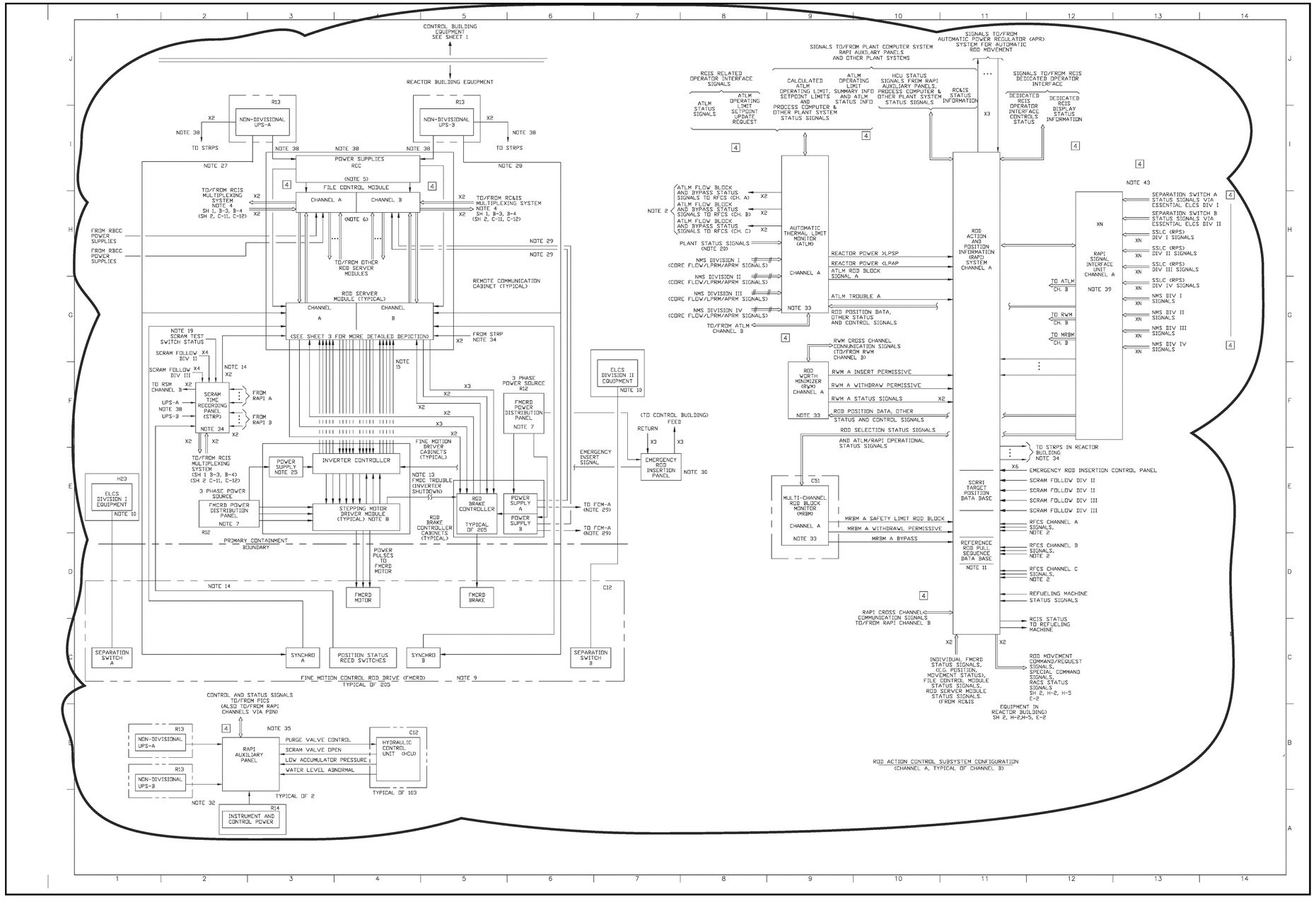

FIGURE 7.7-2 ROD CONTROL AND INFORMATION SYSTEM IED (Sheet 2 of 5)

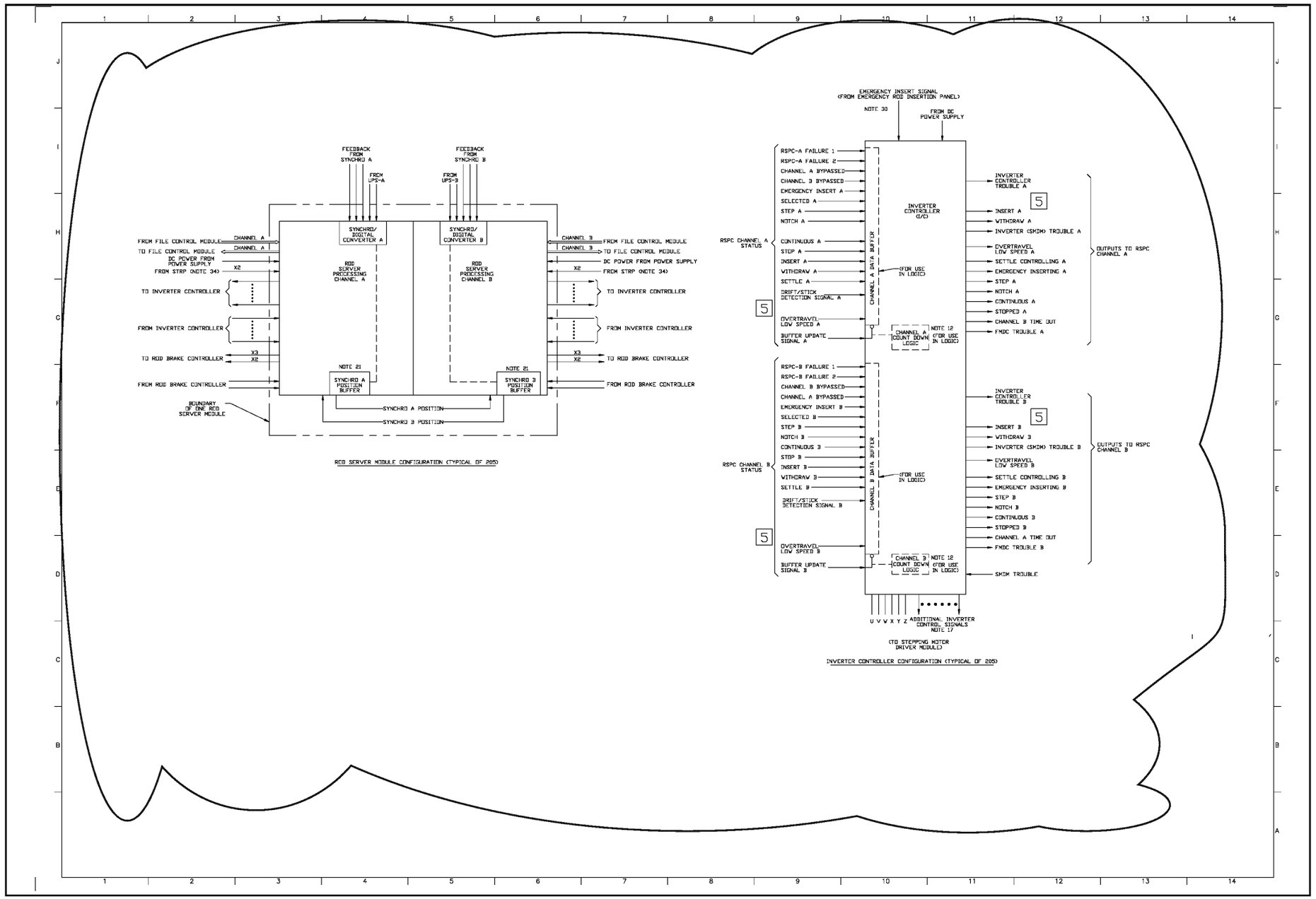

FIGURE 7.7-2 ROD CONTROL AND INFORMATION SYSTEM IED (Sheet 3 of 5)

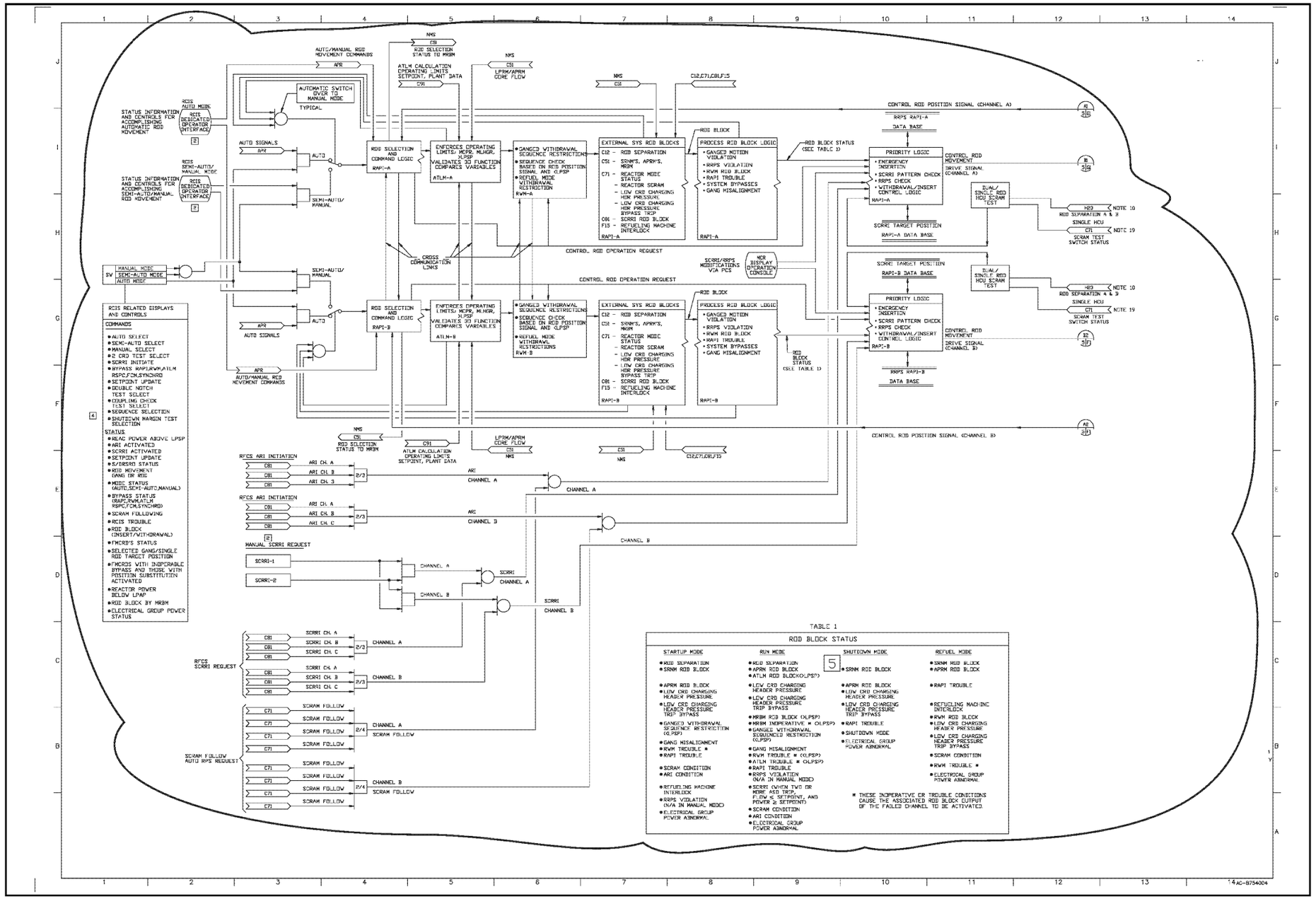

FIGURE 7.7-2 ROD CONTROL AND INFORMATION SYSTEM IED (Sheet 4 of 5)

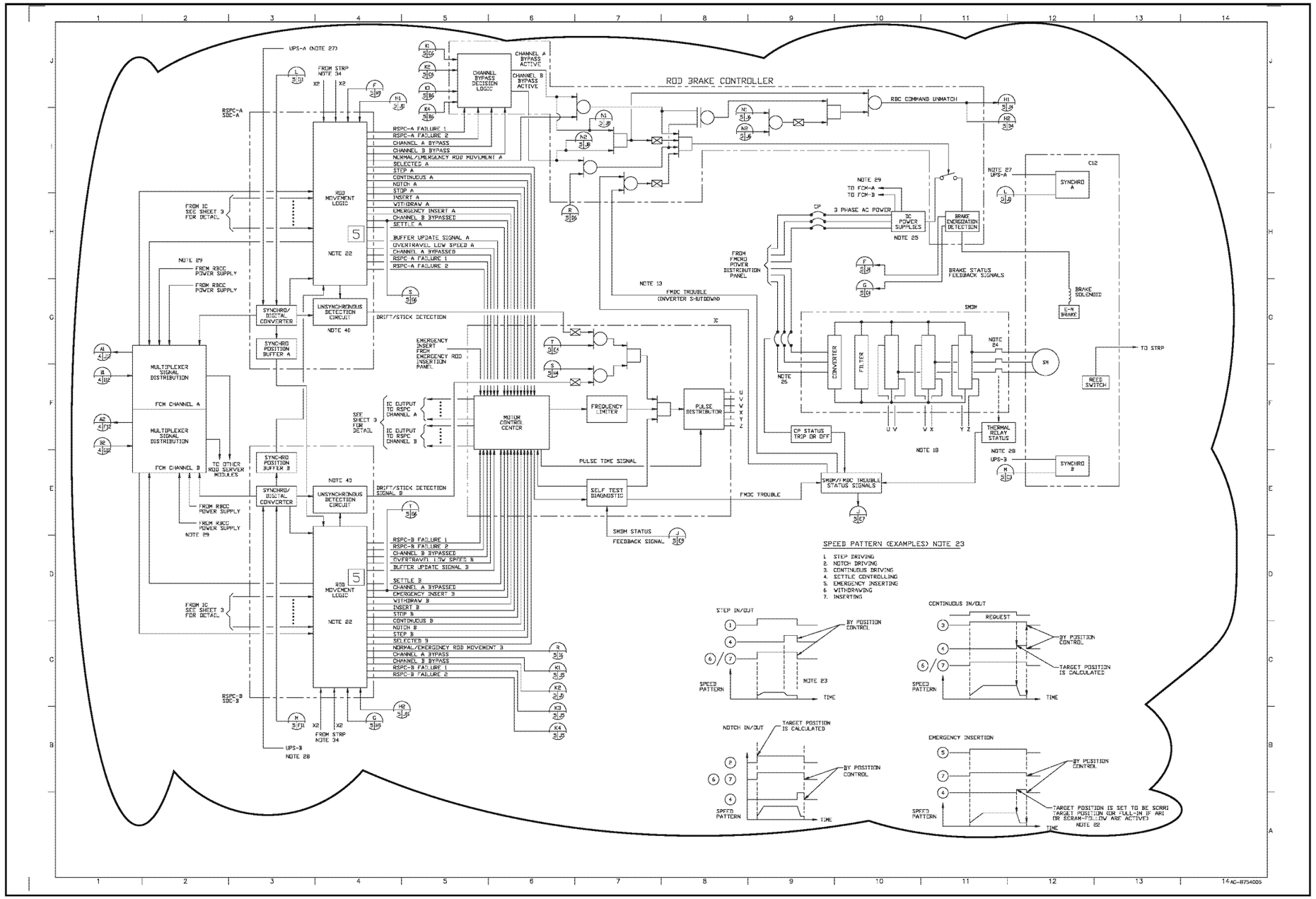

FIGURE 7.7-2 ROD CONTROL AND INFORMATION SYSTEM IED (Sheet 5 of 5)

ROD CONTROL AND INFORMATION SYSTEM INTERLOCK BLOCK DIAGRAM

FOR REVISION STATUS REFER TO SHEETS 2 AND 3.

NOTES:

REFERENCE DOCUMENT TABLE	
REFERENCE NO.	DOCUMENT TITLE
1	ROD CONTROL AND INFORMATION SYSTEM (RCIS) SYSTEM DESIGN DESCRIPTION (SDD)
2	ROD CONTROL AND INFORMATION SYSTEM IED
3	ROD CONTROL AND INFORMATION SYSTEM (RCIS) SYSTEM DESIGN DESCRIPTION (SDD) [DESCRIPTION OF RWM SUBSYSTEM IN THIS DOCUMENT.]
4	ROD CONTROL AND INFORMATION SYSTEM (RCIS) SYSTEM DESIGN DESCRIPTION (SDD) [DESCRIPTION OF ATLM SUBSYSTEM IN THIS DOCUMENT.]
5	REACTOR PROTECTION SYSTEM (RPS) SYSTEM DESIGN DESCRIPTION (SDD)
	NEUTRON MONITORING SYSTEM (NMS) SYSTEM DESIGN DESCRIPTION (SDD)
7	CONTROL ROD DRIVE SYSTEM (CRD) SYSTEM DESIGN DESCRIPTION (SDD)
8	FEEDWATER CONTROL SYSTEM (FWC) SYSTEM DESIGN DESCRIPTION (SDD)
9	REFUELING MACHINE (RFM) PURCHASE SPECIFICATION
10	RECIRCULATION FLOW CONTROL SYSTEM (RFC) SYSTEM DESIGN DESCRIPTION (SDD)
11	AUTOMATIC POWER REGULATOR SYSTEM (APR) SYSTEM DESIGN DESCRIPTION (SDD)
12	REACTOR WATER CLEANUP SYSTEM SYSTEM DESIGN DESCRIPTION (SDD)
13	ROD CONTROL AND INFORMATION SYSTEM (RCIS) HARDWARE/SOFTWARE (HSS) SPECIFICATION
14	ELECTRICAL POWER DISTRIBUTION (EPD) SYSTEM DESIGN SPECIFICATION (SDD)
15	MAIN CONTROL ROOM PANELS (MCRP) SYSTEM DESIGN DESCRIPTION (SDD)
16	REACTOR TRIP AND ISOLATION SYSTEM (RTIS) SYSTEM DESIGN DESCRIPTION (SDD).
17	STEAM BYPASS AND PRESSURE CONTROL SYSTEM SYSTEM DESIGN DESCRIPTION (SDD)

NOTES.

1. THE SYSTEM NUMBER 'C11' IS OMITTED FROM EQUIPMENT NUMBERS AND INSTRUMENT NUMBERS UNLESS SPECIFICALLY REMARKED.
2. AUXILIARY RELAYS AND DEVICES ARE OMITTED UNLESS REQUIRED TO CLARIFY THEIR FUNCTIONS.
3. SET POINTS SHOWN IN THIS DRAWING ARE REFERENCE ONLY. SHOULD THEY CONFLICT WITH THE 'SET POINT DOCUMENT'. THE 'SET POINT DOCUMENT' SHALL GOVERN.
4. PLANT INFORMATION AND CONTROL SYSTEM (PCIS) INPUT POINTS ARE SHOWN BY " △C " SYMBOL.
5. H11–PL–1701,H11–PL–1704 AND FD12 ARE LOCATED IN MAIN CONTROL ROOM. H11–PL–0011A AND FD90 ARE RAPI PANEL LOCATIONS IN MCR BACK–PANEL AREA OF THE CONTROL BUILDING. THESE NUMBERS ARE FOR LOCATION REFERENCE ONLY. THE INSERT AND WITHDRAW PUSHBUTTONS AT THE RAPI PANELS AND ASSOCIATED FD90 TOUCH SWITCH PUSHBUTTON (Z–PB) OUTPUTS HAVE NO EFFECT UNLESS FD90 IS SELECTED FOR LOCAL CONTROL OPERATION (BY ASSOCIATED KEYLOCK SWITCH ON RAPI PANEL CLOSE TO FD90). IN ACTUAL DESIGN, FD12 EQUALS RCIS DOI; FD90 RAPI DOI.
6. RAPI CHANNEL A OUTPUTS ARE USED FOR FD12 AND FD90 UNLESS RAPI CHANNEL A BYPASS CONDITION EXISTS. IF RAPI CHANNEL A IS BYPASSED, RAPI CHANNEL B OUTPUTS ARE USED FOR FD12 AND FD90. IF NEITHER RAPI CHANNEL IS BYPASSED, THE CORRESPONDING SIGNALS NOTED ARE CHECKED FOR AGREEMENT BY THE FD CONTROLLERS AS PART OF THE FD SELF TEST LOGIC.
7. IN CASE OF FLIP–FLOP HAS WIPEOUT CIRCUIT, FLIP–FLOP OUTPUTS THE RESET SIGNAL.
8. TOUCH SWITCH (Z–PB) OUTPUTS THE SIGNAL WITH OPERATING [EXECUTE SIGNAL] Z–PB AFTER TOUCH OPERATION IN FLAT DISPLAY. SOFT PUSHBUTTON (Z–BP) STATUS FEEDBACK SIGNALS ARE NOT DEPICTED IN THIS IBD.
9. FOR THE SIGNAL CONNECTION CIRCLES OR TABLES, "*" IS USED ON THE LEFT TO DENOTE THE CONNECTION FOR THIS CASE IS ON THE SAME SHEET.
10. REFERENCE COLORS USED FOR FD12 AND FD90 STATUS INFORMATION DISPLAYS MAY CHANGE BASED UPON RESULTS OF HUMAN FACTORS ENGINEERING EVALUATIONS. THE REFERENCE COLORS USED FOR THIS IBD ARE AS FOLLOWS:
    - (G) – GREEN
    - (B) – DARK BLUE
    - (M) – MAGENTA
    - (Y) – YELLOW
    - (R) – RED
    - (C) – CYAN
    - (W) – WHITE
11. IN GENERAL, THIS IBD DEPICTS LOGIC FOR RAPI CHANNEL A AND FOR ONE RSPC CHANNEL A FOR ONLY ONE CONTROL ROD. ALSO, STRP LOGIC, IC LOGIC AND RBC LOGIC IS ONLY SHOWN FOR ONE TYPICAL CONTROL ROD. RAPI CHANNEL B LOGIC IS EQUIVALENT TO RAPI CHANNEL A LOGIC. RSPC CHANNEL B LOGIC FOR A GIVEN CONTROL ROD IS EQUIVALENT TO RSPC CHANNEL A LOGIC FOR THAT CONTROL ROD. THE RCIS LOGIC FOR THE OTHER 204 CONTROL RODS IS EQUIVALENT TO THAT OF SHOWN FOR THE ONE TYPICAL CONTROL ROD.
12. THERE IS ADDITIONAL LOGIC (INCLUDED IN THE FLAT DISPLAY CONTROLLER TO DRIVE THE FINAL DISPLAY FORMATS) THAT IS NOT SHOWN IN THIS IBD. THIS LOGIC IS DETERMINED DURING DETAILED DISPLAY DESIGN.

RCIS IBD COVER

FIGURE 7.7-3 ROD CONTROL AND INFORMATION SYSTEM IBD (Sheet 1 of 114)

NO.	TITLE	SH. NO.	REVISION
1	COVER	1	0
2	TABLE OF CONTENTS	2	0
3	TABLE OF CONTENTS	3	0
4	RAPI INPUT SIGNAL (1/5)	4	0
5	RAPI INPUT SIGNAL (2/5)	5	0
6	RAPI INPUT SIGNAL (3/5)	6	0
7	RAPI INPUT SIGNAL (4/5)	7	0
8	RAPI INPUT SIGNAL (5/5)	8	0
9	RAPI RCIS MODE SELECTION LOGIC (1/6)	9	0
10	RAPI RCIS MODE SELECTION LOGIC (2/6)	10	0
11	RAPI RCIS MODE SELECTION LOGIC (3/6)	11	0
12	RAPI RCIS MODE SELECTION LOGIC (4/6)	12	0
13	RAPI RCIS MODE SELECTION LOGIC (5/6)	13	0
14	RAPI RCIS MODE SELECTION LOGIC (6/6)	14	0
15	RAPI WITHDRAWAL/INSERT SIGNAL (STEP MODE) (1/3)	15	0
16	RAPI WITHDRAWAL/INSERT SIGNAL (NOTCH MODE (2/3)	16	0
17	RAPI WITHDRAWAL/INSERT SIGNAL (CONTINUOUS MODE) (3/3)	17	0
17A	RAPI WITHDRAWAL/INSERT SIGNAL (CONTINUOUS MODE) (3/3)	17A	0
18	RAPI SINGLE ROD SELECTION LOGIC	18	0
18A	ROD SELECTION RESET LOGIC	18A	0
19	RAPI GANG ROD SELECTION LOGIC	19	0
20	RAPI SEMI-AUTO/AUTO MODE TARGET POSITION GENERATION LOGIC	20	0
21	RAPI GANG LARGE DEVIATION/MANUAL MODE TARGET POSITION GENERATION LOGIC	21	0
22	RAPI CRD TEST MODE TARGET POSITION GENERATION LOGIC	22	0
23	RAPI RRPS/SCRRI DATA DOWNLOAD LOGIC (1/2)	23	0
24	RAPI RRPS/SCRRI DATA DOWNLOAD LOGIC (2/2)	24	0
25	RAPI ROD WITHDRAWAL PERMISSVE LOGIC (1/3)	25	0
26	RAPI ROD WITHDRAWAL PERMISSVE LOGIC (2/3)	26	0
27	RAPI ROD WITHDRAWAL PERMISSVE LOGIC (3/3)	27	0
28	RAPI ROD INSERT PERMISSIVE LOGIC (1/1)	28	0
29	RAPI RCIS MODE AUTO OUT OF SERVICE LOGIC	29	0

NO.	TITLE	SH. NO.	REVISION
30	RAPI BYPASS LOGIC	30	0
31	RSPC BYPASS LOGIC	31	0
31A	IC BYPASS LOGIC	31A	0
32	FCM BYPASS LOGIC	32	0
33	SYNCHRO BYPASS LOGIC	33	0
34	RAPI ROD INOP BYPASS LOGIC	34	0
35	RCIS TROUBLE DISPLAY (1/4)	35	0
36	RCIS TROUBLE DISPLAY (2/4)	36	0
37	RCIS TROUBLE DISPLAY (3/4)	37	0
38	RCIS TROUBLE DISPLAY (4/4)	38	0
39	RAPI/RSPC INTERFACE LOGIC (1/4)	39	0
40	RAPI/RSPC INTERFACE LOGIC (2/4)	40	0
41	RAPI/RSPC INTERFACE LOGIC (3/4)	41	0
42	RAPI/RSPC INTERFACE LOGIC (4/4)	42	0
43	REED SWITCH INPUT	43	0
43A	REED SWITCH INPUT	43A	0
44	RSPC SYNCHRO/ROD POSITION/ECHO LOGIC	44	0
45	RSPC STEP WITHDRAWAL LOGIC	45	0
46	RSPC STEP INSERT LOGIC	46	0
47	RSPC STEP DRIVE NOT COMPLETE/SETTLE LOGIC	47	0
47A	RCIS MUX MONITOR/RECIRC RUNBACK LOGIC	47A	0
48	RSPC NOTCH WITHDRAWAL LOGIC	48	0
49	RSPC NOTCH INSERT LOGIC	49	0
50	RSPC NOTCH DRIVE NOT COMPLETE/SETTLE LOGIC	50	0
51	RSPC CONTINUOUS WITHDRAWAL LOGIC	51	0
52	RSPC CONTINUOUS INSERT LOGIC	52	0
53	RSPC CONTINUOUS DRIVE NOT COMPLETE/SETTLE LOGIC	53	0
54	RSPC SCRRI INSERT LOGIC	54	0
55	RSPC SCRRI INSERT NOT COMPLETE/SETTLE LOGIC	55	0
56	RSPC EMERGENCY INSERT LOGIC	56	0
57	RSPC EMERGENCY INSERT NOT COMPLETE/SETTLE LOGIC	57	0
58	RSPC STICK/DRIFT DETECTION	58	0

NOTES:

RCIS IBD
TABLE OF CONTENTS

T.

FIGURE 7.7-3 ROD CONTROL AND INFORMATION SYSTEM IBD (Sheet 2 of 114)

NOTES:

NO.	TITLE	SH. NO.	REVISION
59	RSPC INVERTER CONTROLLER INTERFACE LOGIC (1/5)	59	0
60	RSPC INVERTER CONTROLLER INTERFACE LOGIC (2/5)	60	0
61	RSPC INVERTER CONTROLLER INTERFACE LOGIC (3/5)	61	0
62	RSPC INVERTER CONTROLLER INTERFACE LOGIC (4/5)	62	0
63	RSPC INVERTER CONTROLLER INTERFACE LOGIC (5/5)	63	0
64	BRAKE CONTROL LOGIC	64	0
65	PURGE WATER ELECTRO MAGNETIC VALVE CONTROL LOGIC	65	0
66	ALARM (1/9)	66	0
67	ALARM (2/9)	67	0
68	ALARM (3/9)	68	0
69	ALARM (4/9)	69	0
70	ALARM (5/9)	70	0
71	ALARM (6/9)	71	0
72	ALARM (7/9)	72	0
73	ALARM (8/9)	73	0
74	ALARM (9/9)	74	0
75	ALARM ITEM TABLE	75	0
76	ROD POSITION AND SUMMARY I/O POINTS	76	0

FOR REPRESENTATIVE LOGIC FO THE AUTOMATIC THERMAL LIMIT MONITER (ATLM) SUBSYSTEM OF THE RCIS, SEE SHEETS 77 THROUGH 86 OF THIS RCIS IBD DRAWING. ON THESE SHEETS INPUT OR OUTPUT SIGNALS IDENTIFIED AS ASSOCIATE WITH REFERENCE 1 ARE INTERFACE SIGNALS WITH THE RAPI SUBSYSTEM OF THE RCIS. REPRESENTATIVE LOGIC IS SHOWN FOR ATLM CHANNEL A (ATLM–A) ON THESE SHEETS. ATLM CHANNEL B (ATLM–B) IS THE EQUIVALENT OF THE LOGIC OF ATLM–A.

FOR REPRESENTATIVE LOGIC FOR THE ROD WORTH MINIMIZER (RWM) SUBSYSTEM OF THE RCIS, SEE SHEETS 87 THROUGH 114 OF THE RCIS IBD DRAWING. ON THESE SHEETS INPUT OR OUTPUT SIGNALS IDENTIFIED AS ASSOOCIATE WITH REFERENCE 1 ARE INTERFACE SIGNALS WITH THE RAPI SUBSYSTEM OF THE RCIS. REPRESENTATIVE LOGIC IS SHOWN FOR RWM CHANNEL–A (RWN–A) ON THESE SHEETS. RWM CHANNEL–B (RWM–B) IS THE EQUIVALENTOF THE LOGIC IN RWM–A.

RCIS IBD
TABLE OF CONTENTS

FIGURE 7.7-3 ROD CONTROL AND INFORMATION SYSTEM IBD (Sheet 3 of 114)

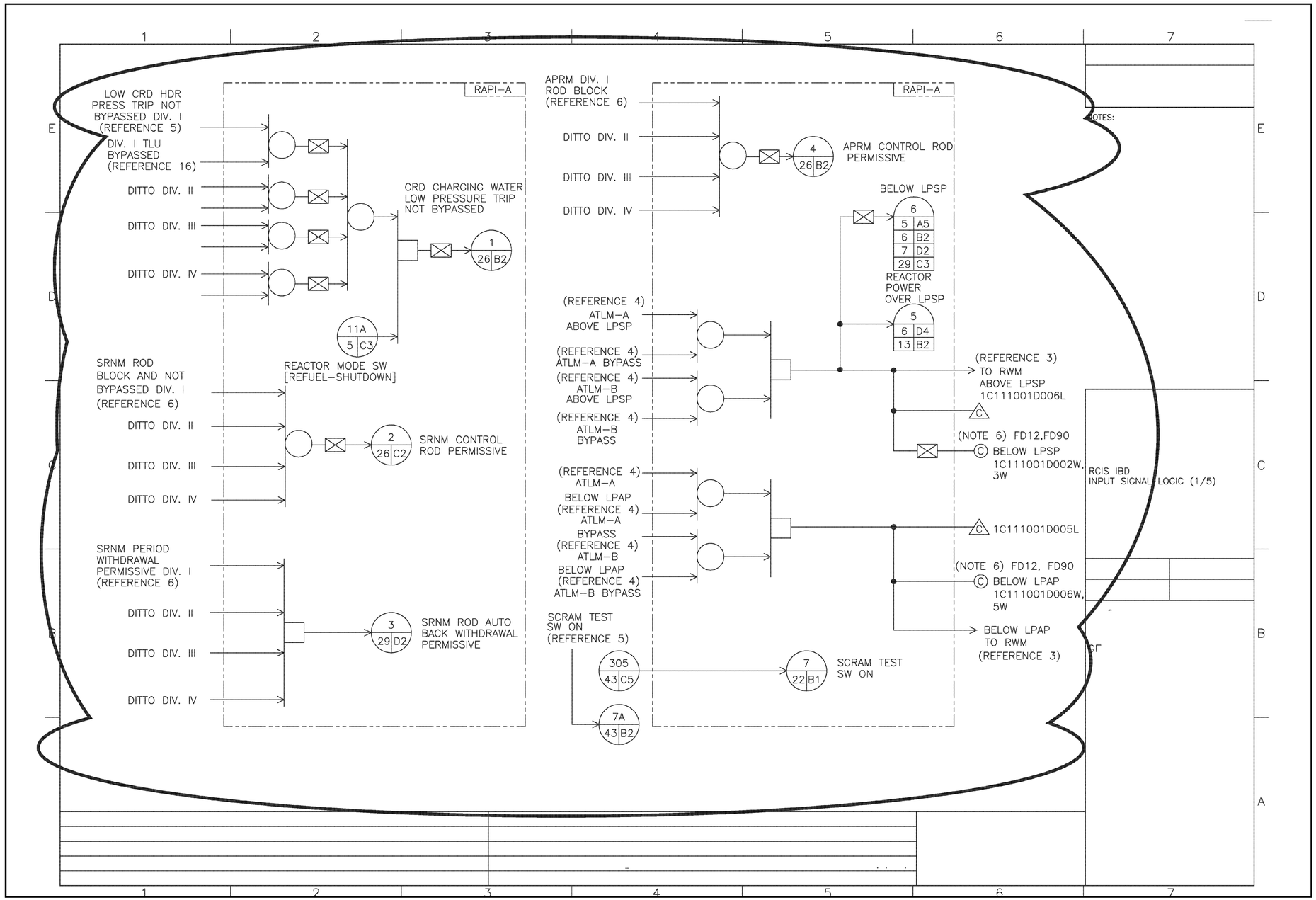

FIGURE 7.7-3 ROD CONTROL AND INFORMATION SYSTEM IBD (Sheet 4 of 114)

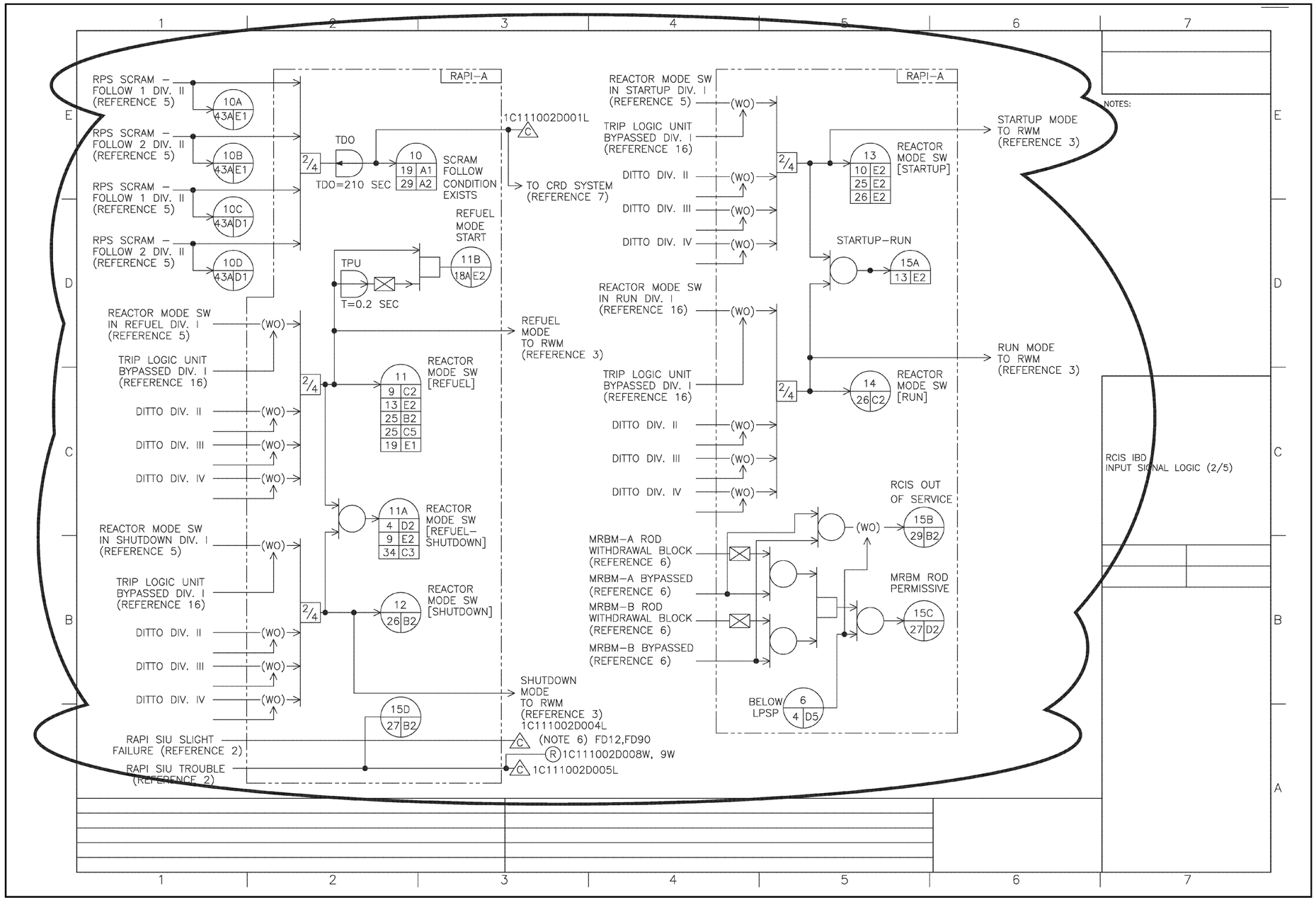

FIGURE 7.7-3 ROD CONTROL AND INFORMATION SYSTEM IBD (Sheet 5 of 114)

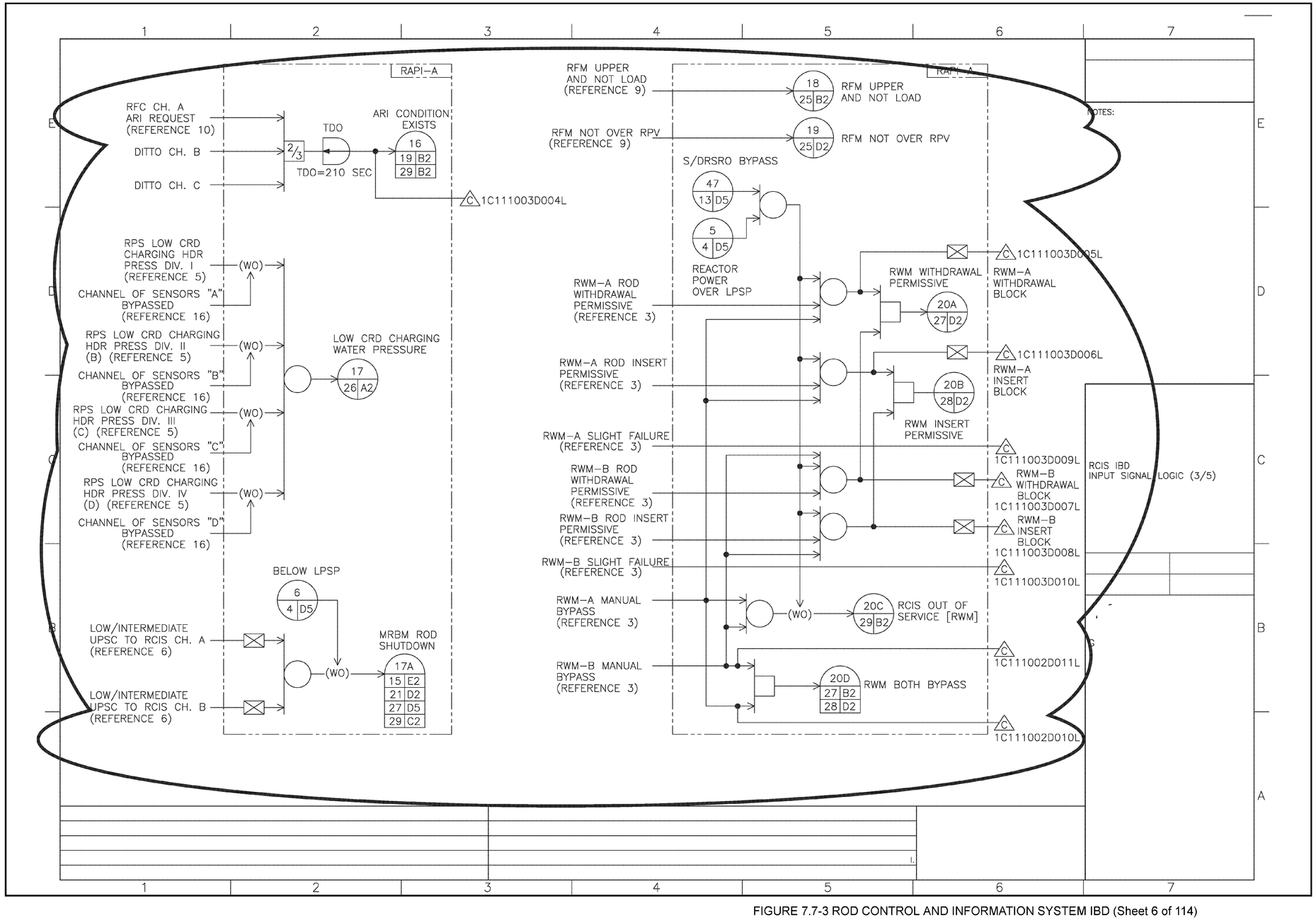

FIGURE 7.7-3 ROD CONTROL AND INFORMATION SYSTEM IBD (Sheet 6 of 114)

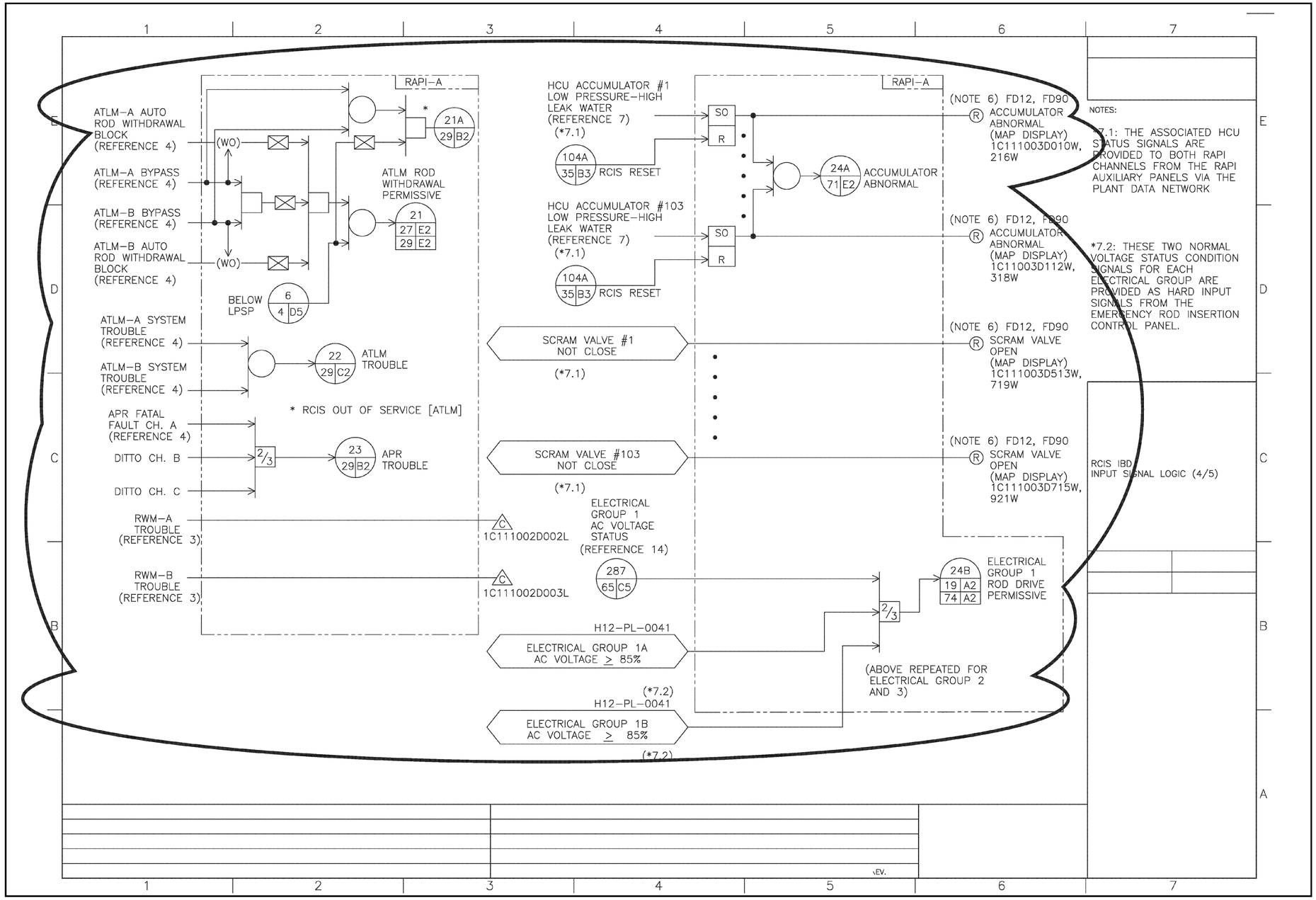

FIGURE 7.7-3 ROD CONTROL AND INFORMATION SYSTEM IBD (Sheet 7 of 114)

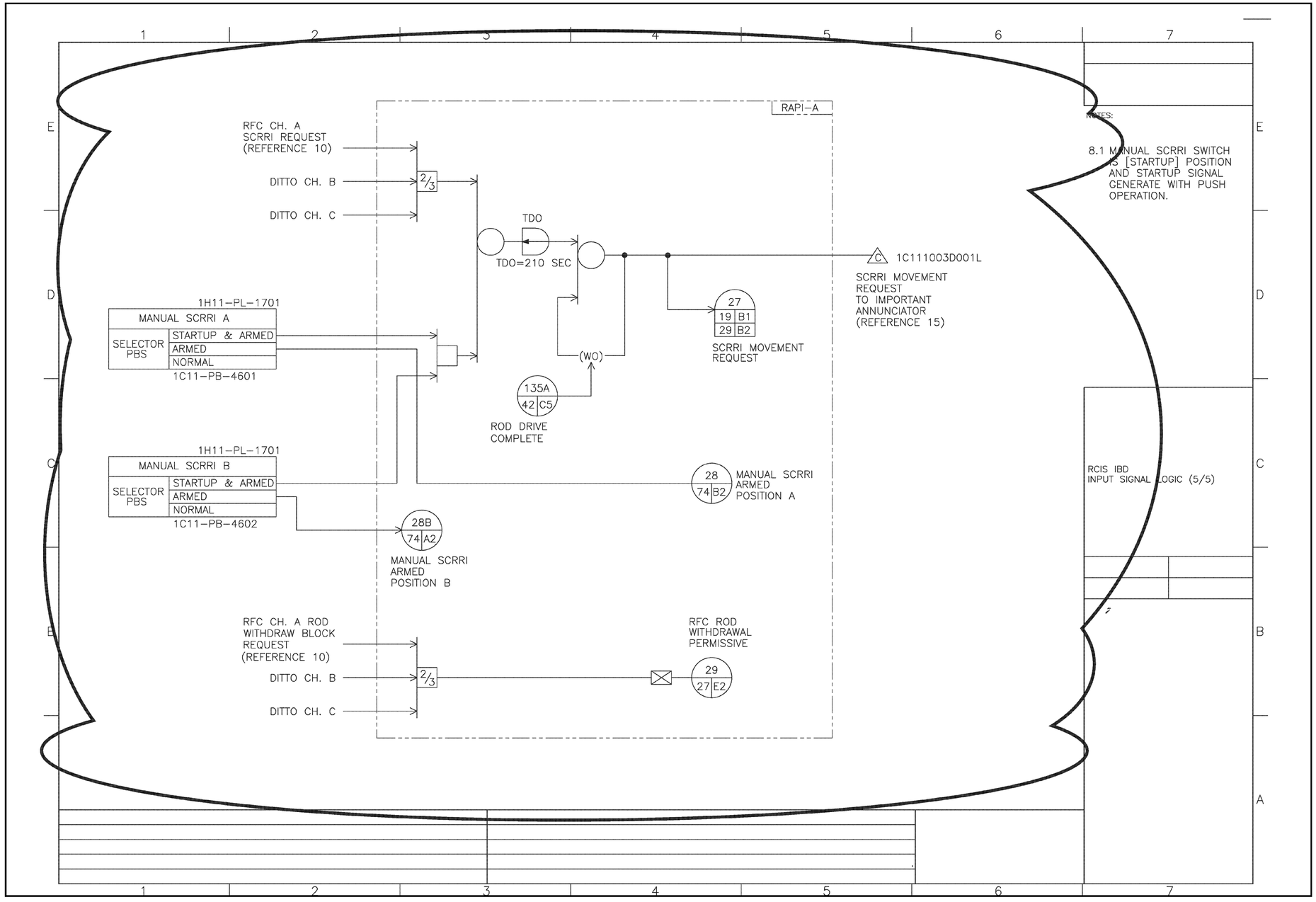

FIGURE 7.7-3 ROD CONTROL AND INFORMATION SYSTEM IBD (Sheet 8 of 114)

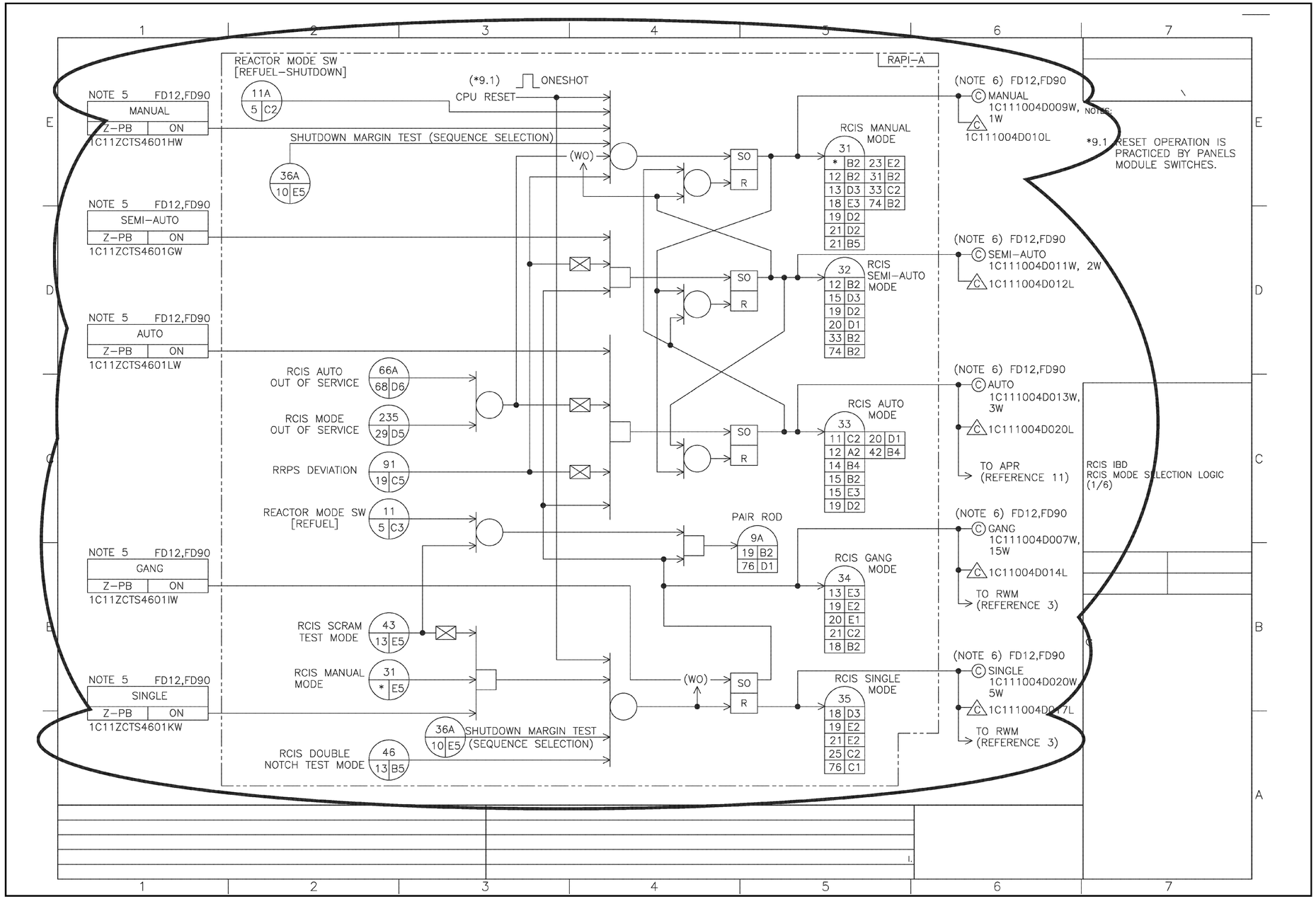

FIGURE 7.7-3 ROD CONTROL AND INFORMATION SYSTEM IBD (Sheet 9 of 114)

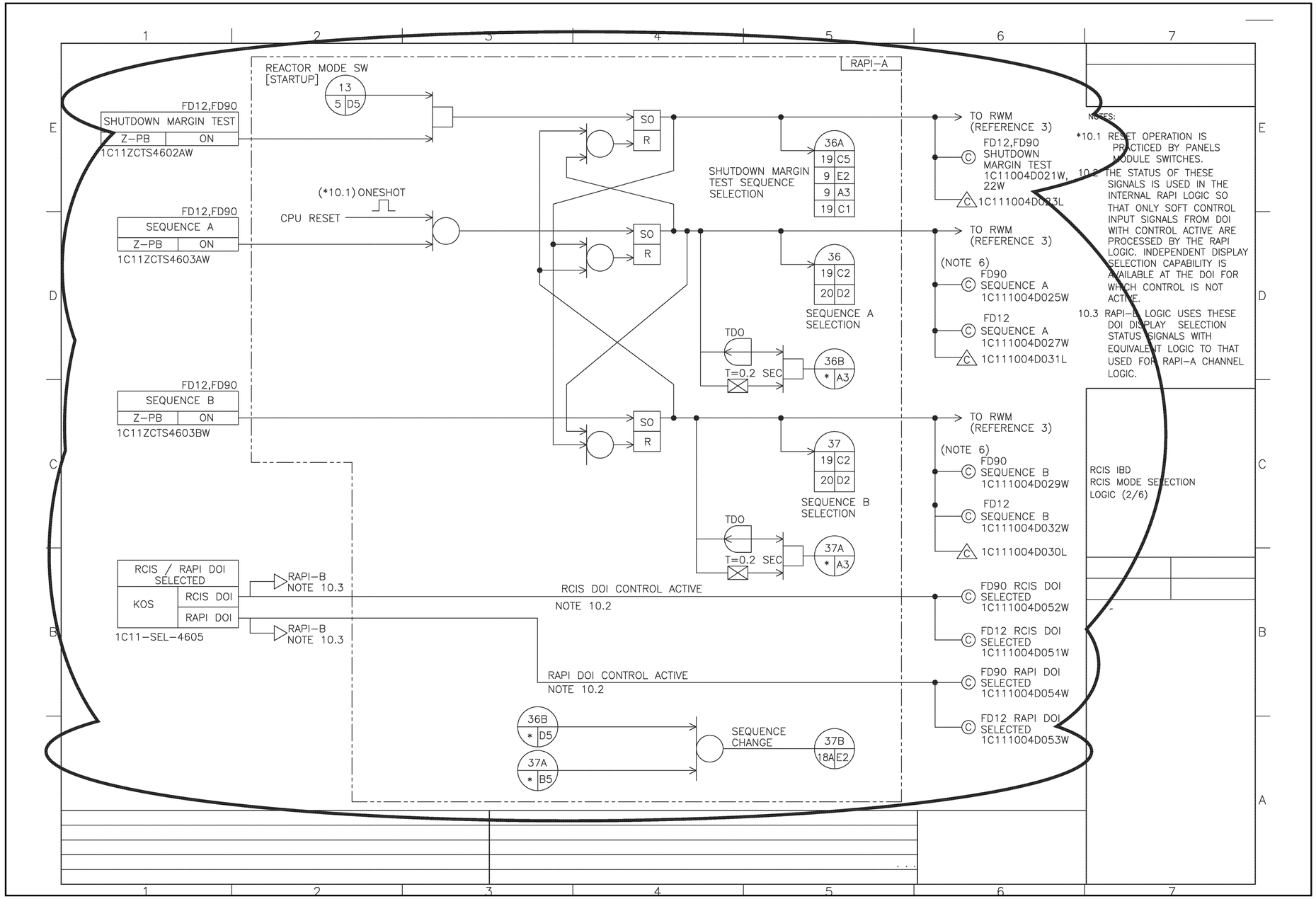

FIGURE 7.7-3 ROD CONTROL AND INFORMATION SYSTEM IBD (Sheet 10 of 114)

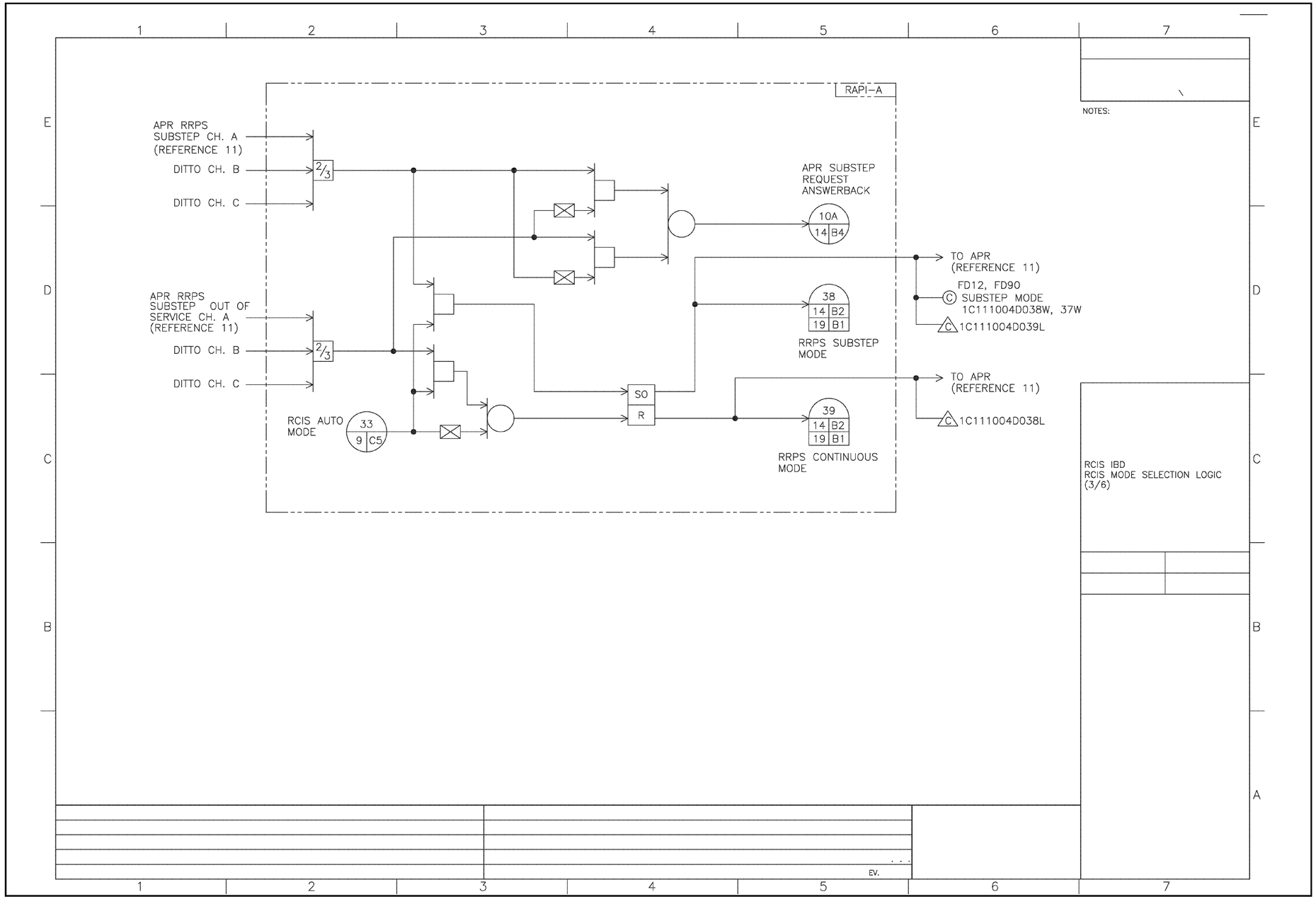

FIGURE 7.7-3 ROD CONTROL AND INFORMATION SYSTEM IBD (Sheet 11 of 114)

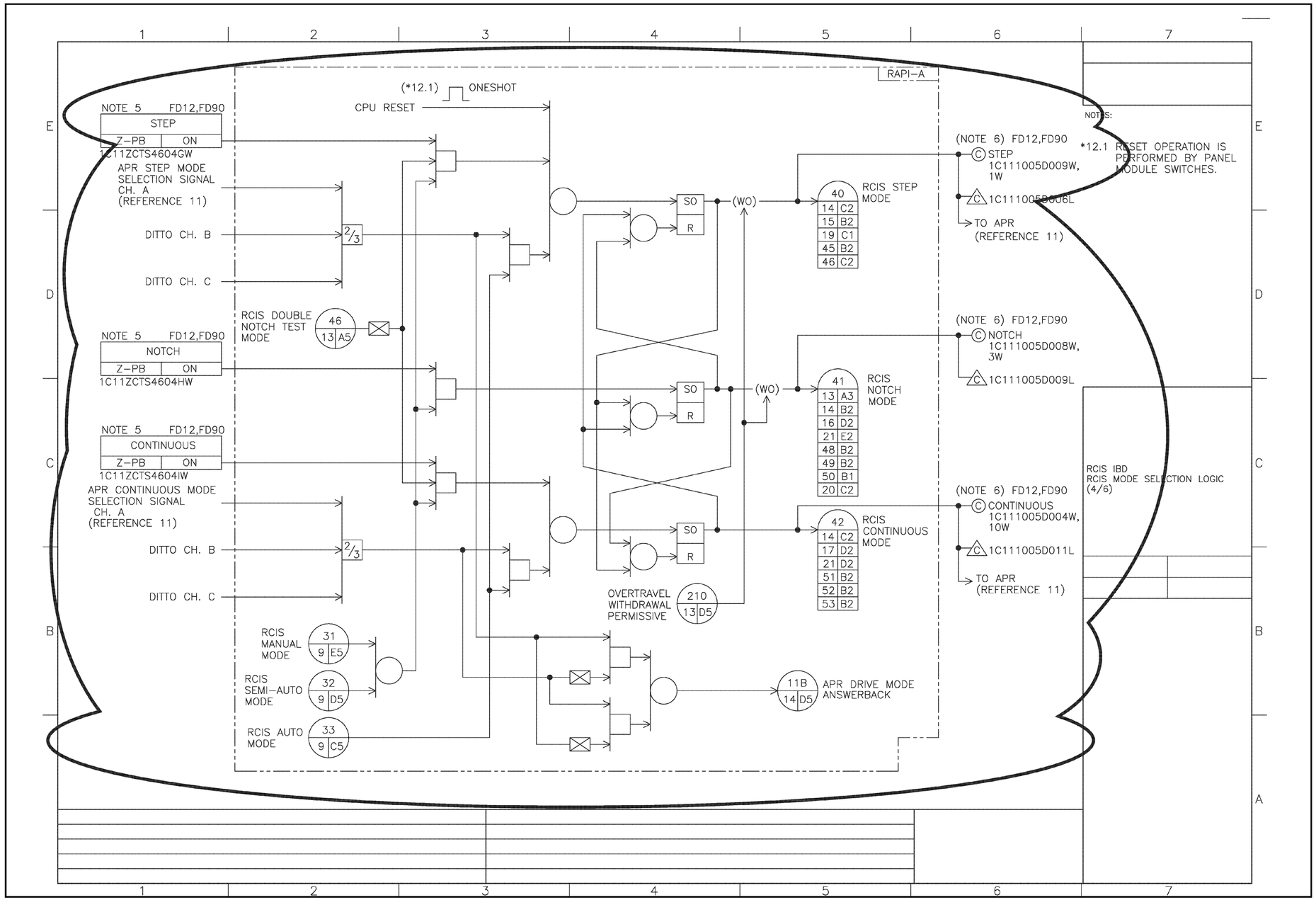

FIGURE 7.7-3 ROD CONTROL AND INFORMATION SYSTEM IBD (Sheet 12 of 114)

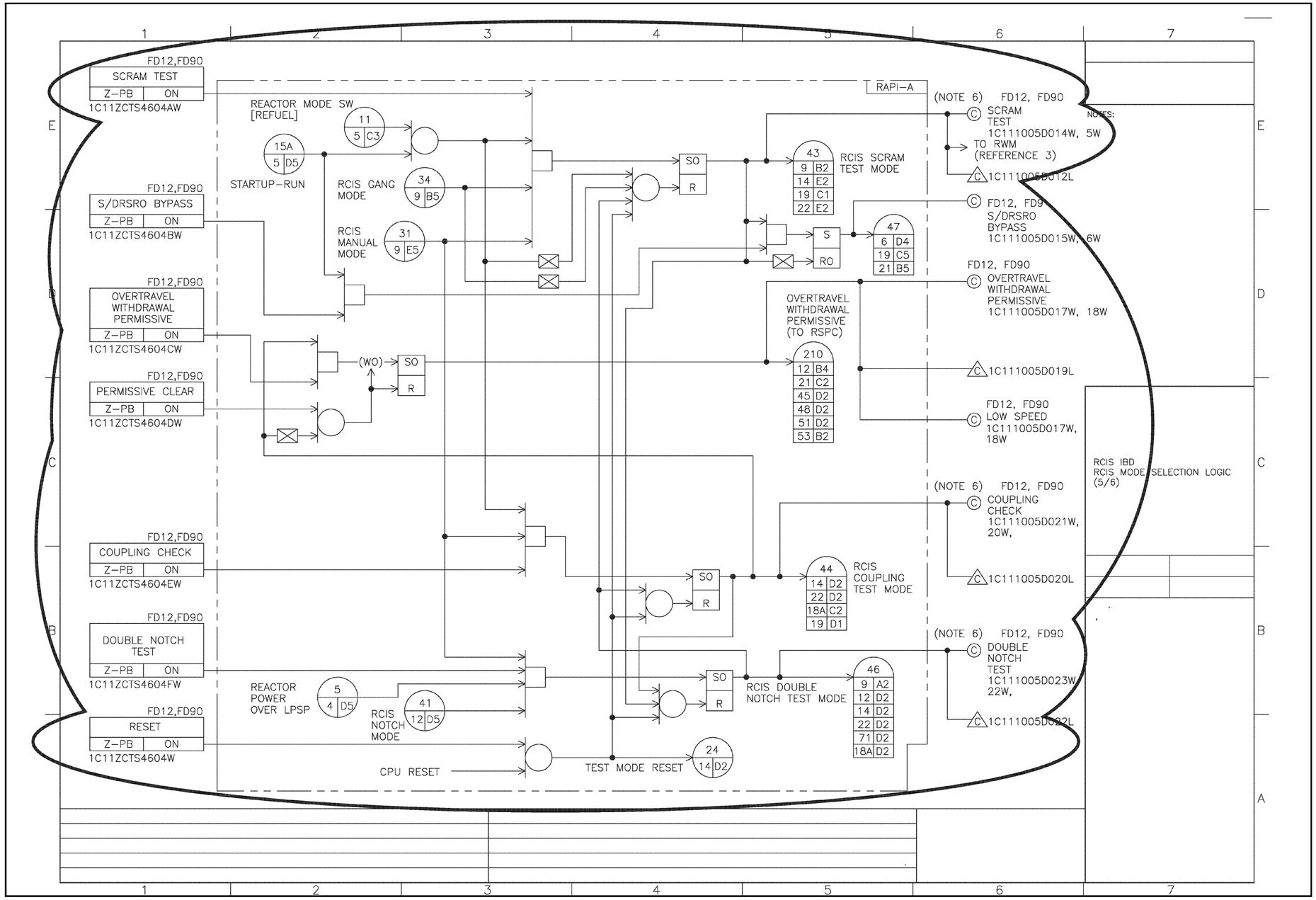

FIGURE 7.7-3 ROD CONTROL AND INFORMATION SYSTEM IBD (Sheet 13 of 114)

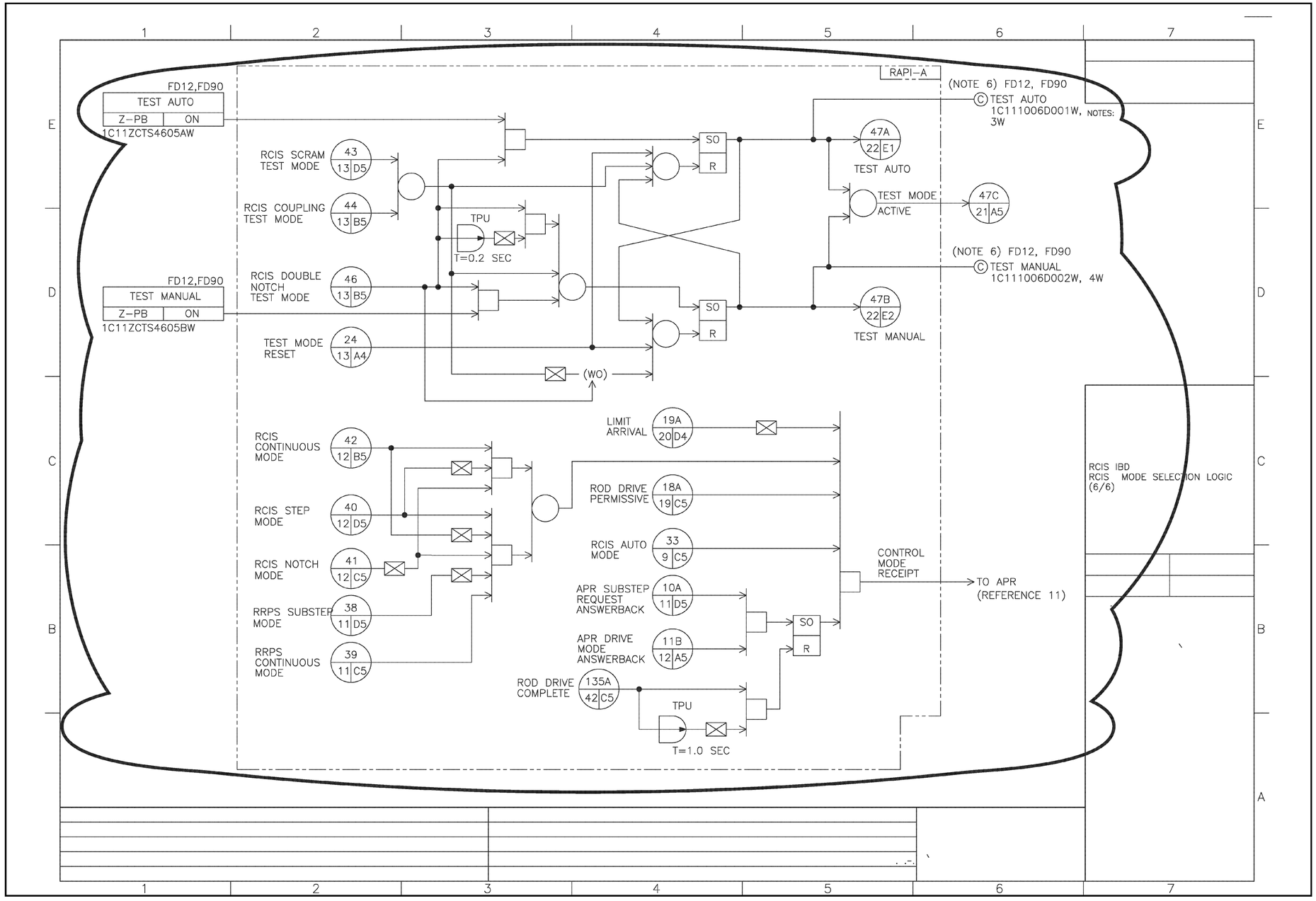

FIGURE 7.7-3 ROD CONTROL AND INFORMATION SYSTEM IBD (Sheet 14 of 114)

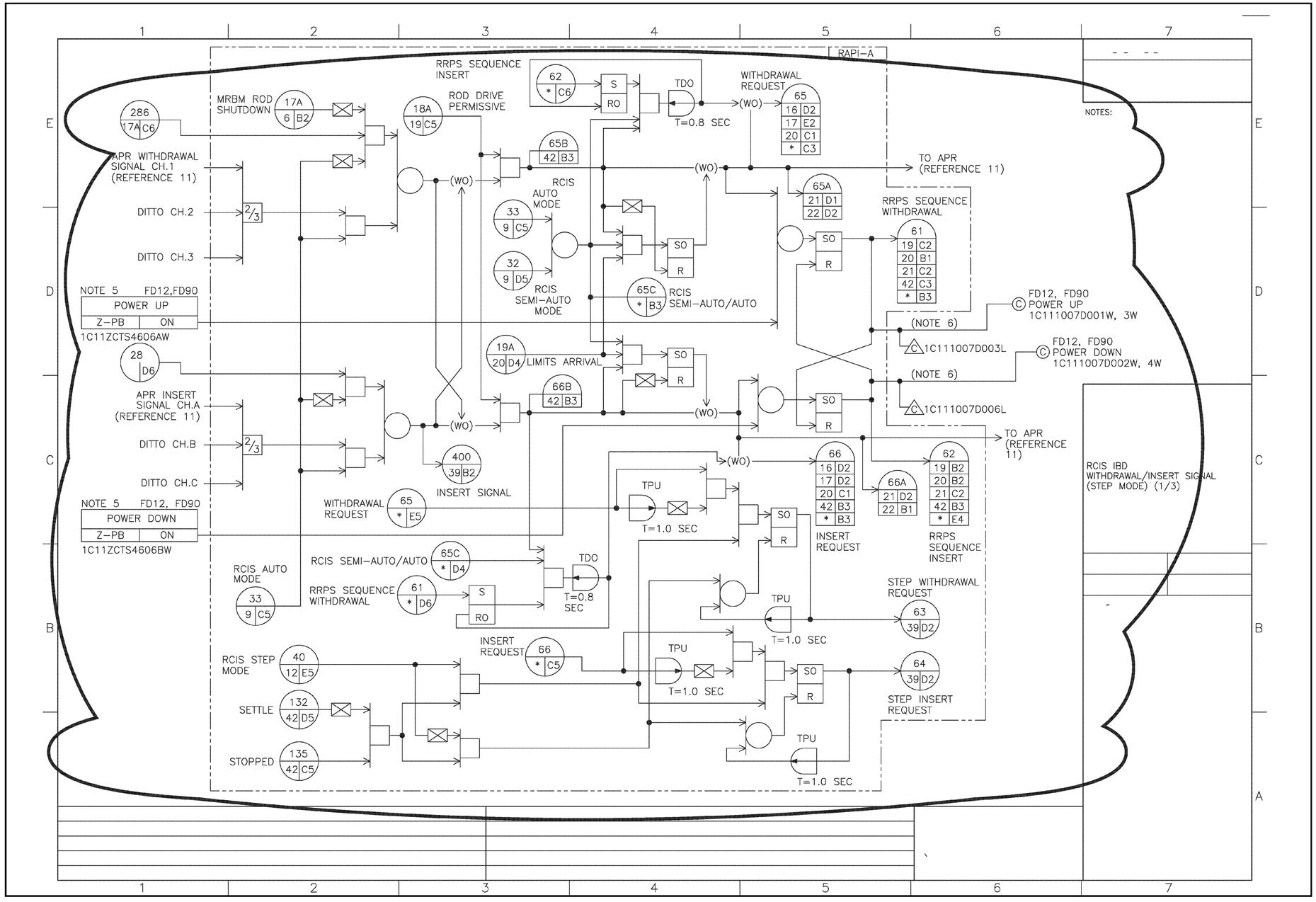

FIGURE 7.7-3 ROD CONTROL AND INFORMATION SYSTEM IBD (Sheet 15 of 114)

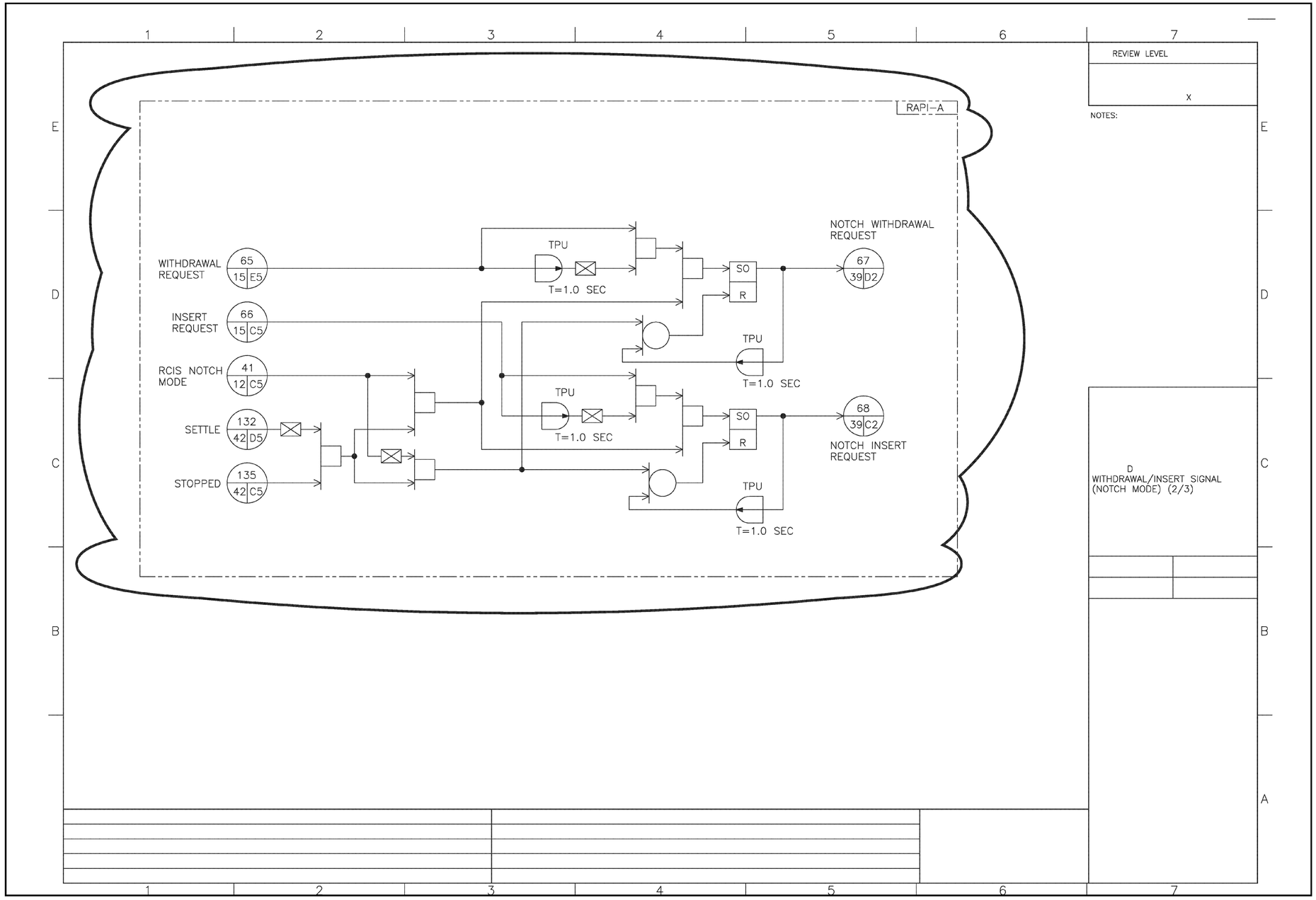

FIGURE 7.7-3 ROD CONTROL AND INFORMATION SYSTEM IBD (Sheet 16 of 114)

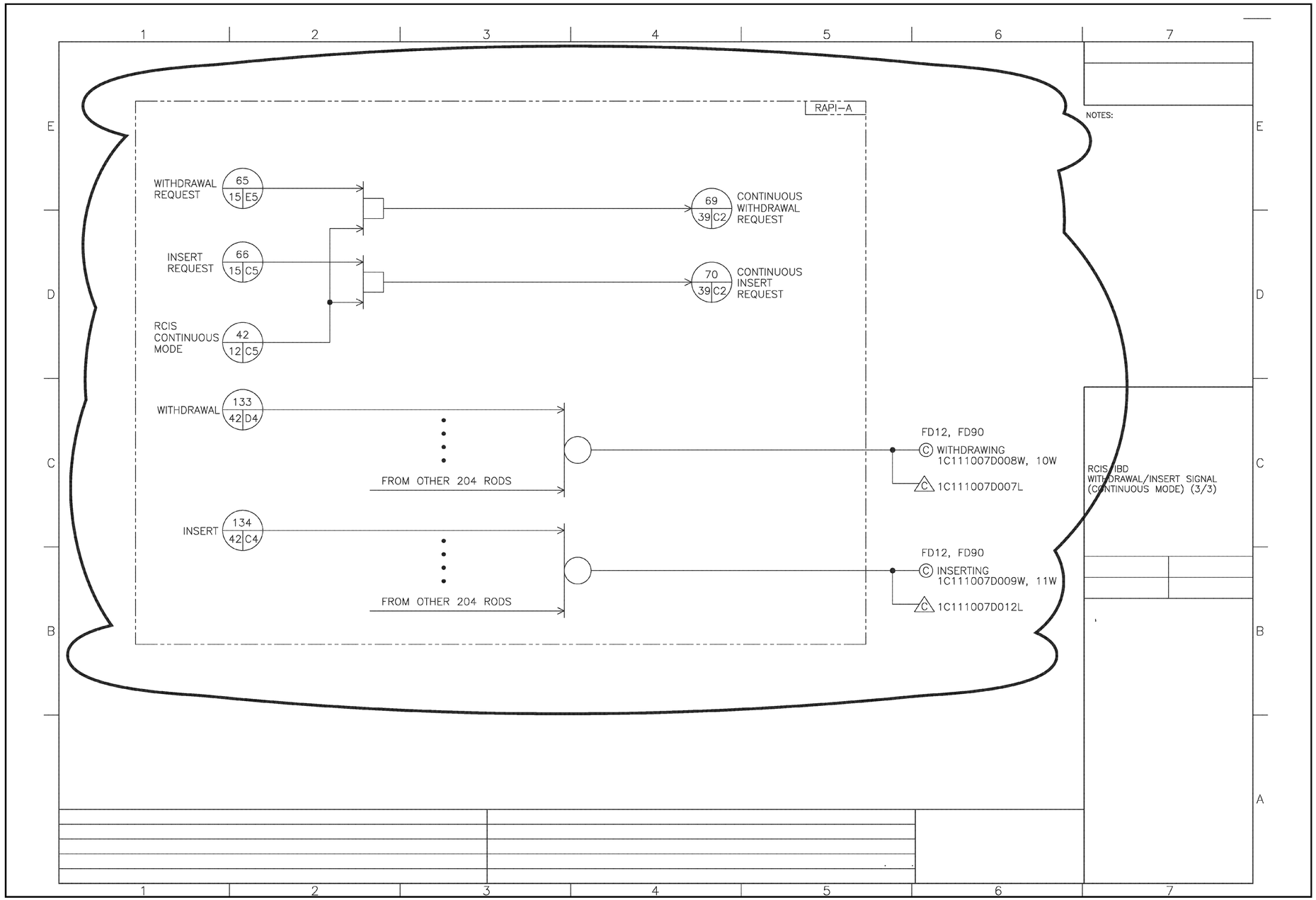

FIGURE 7.7-3 ROD CONTROL AND INFORMATION SYSTEM IBD (Sheet 17 of 114)

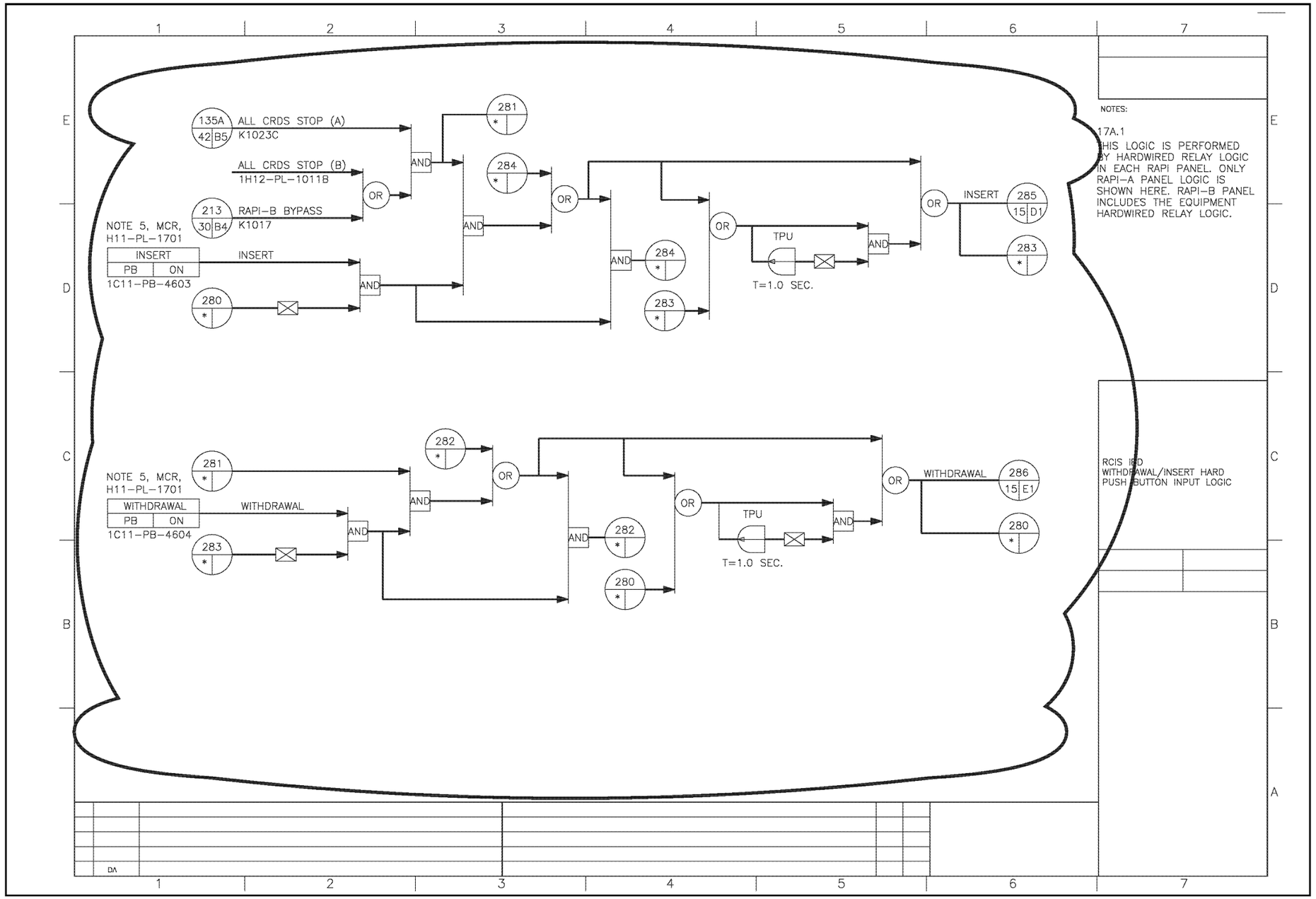

FIGURE 7.7-3 ROD CONTROL AND INFORMATION SYSTEM IBD (Sheet 17a of 114)

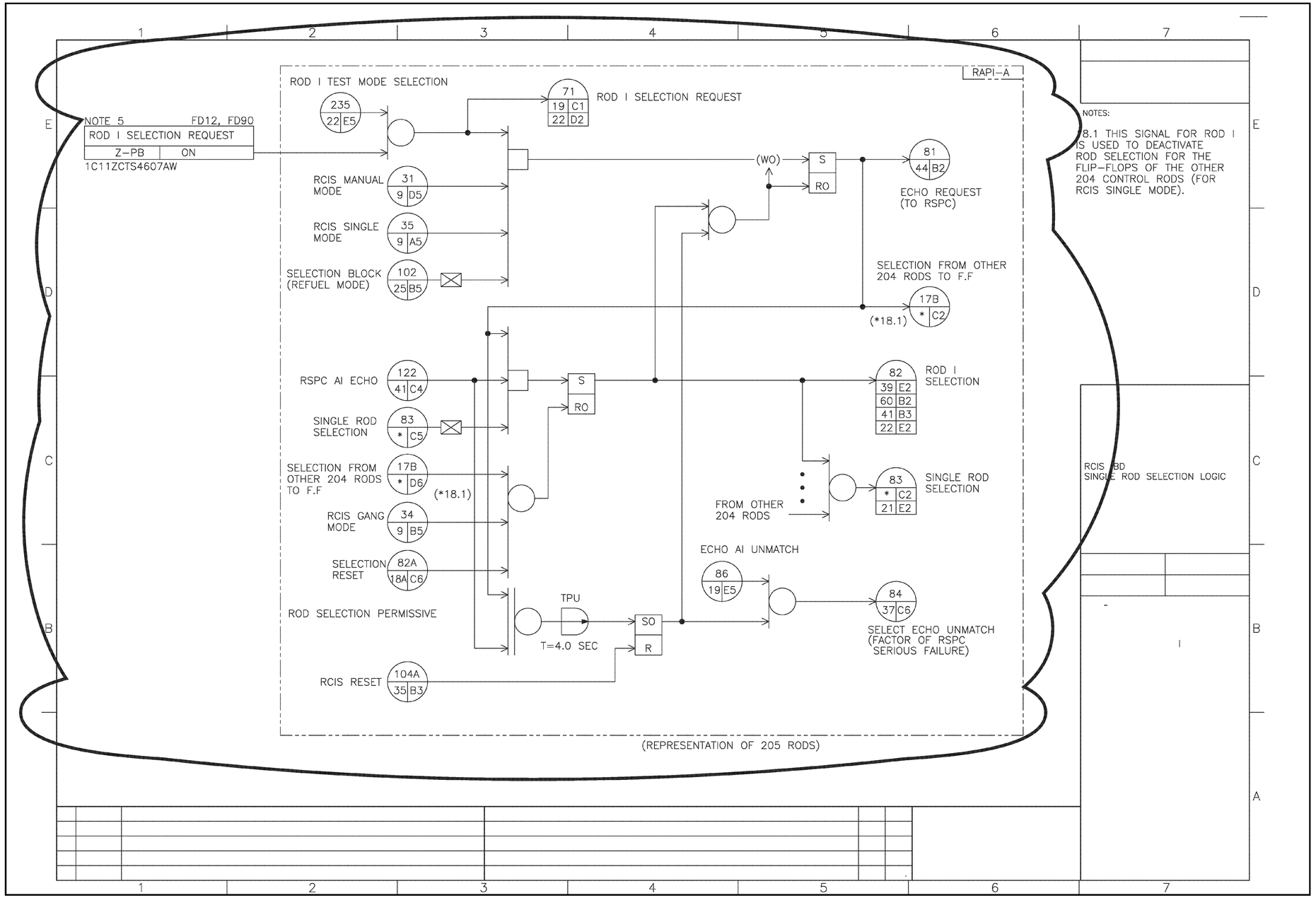

FIGURE 7.7-3 ROD CONTROL AND INFORMATION SYSTEM IBD (Sheet 18 of 114)

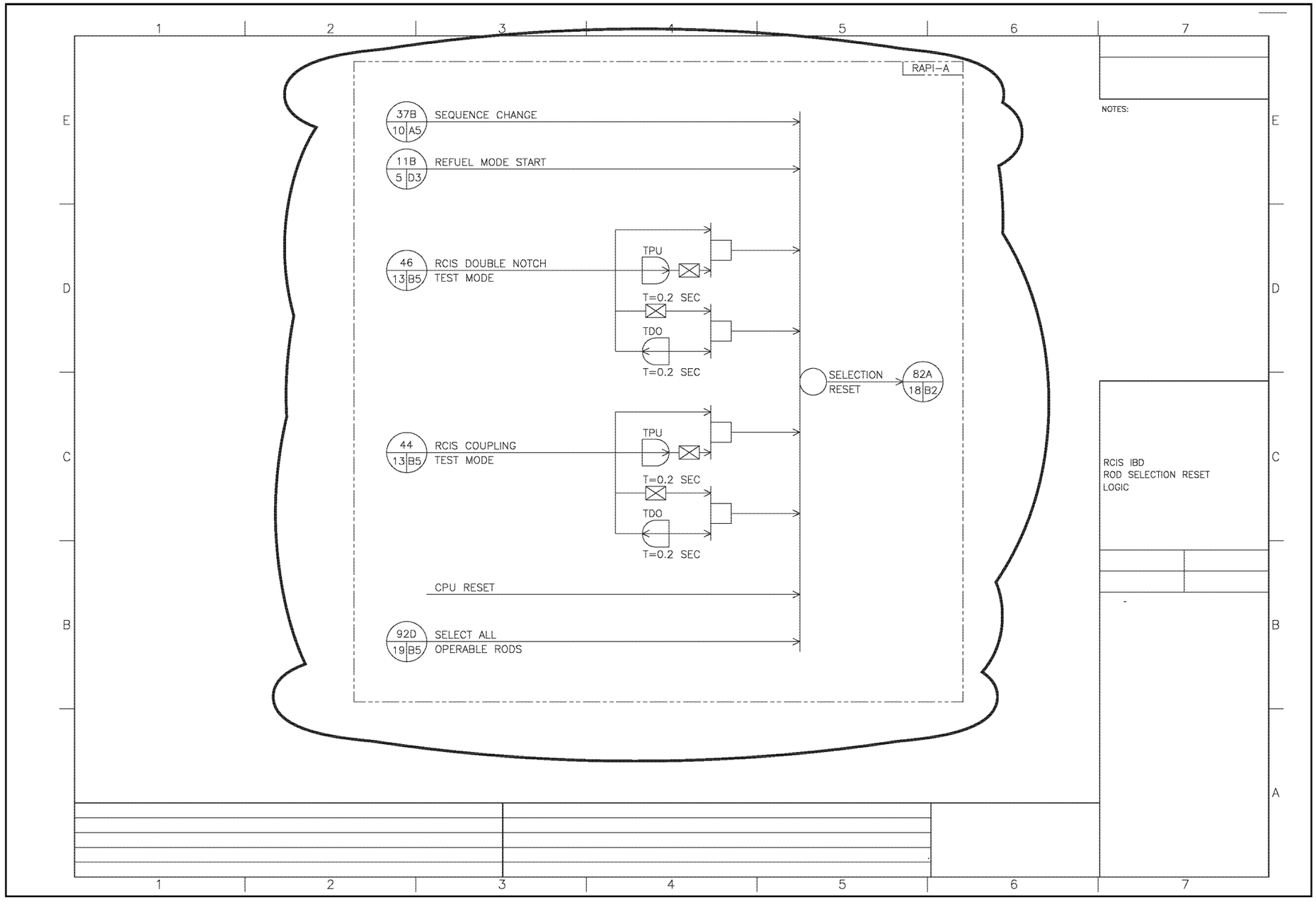

FIGURE 7.7-3 ROD CONTROL AND INFORMATION SYSTEM IBD (Sheet 18a of 114)

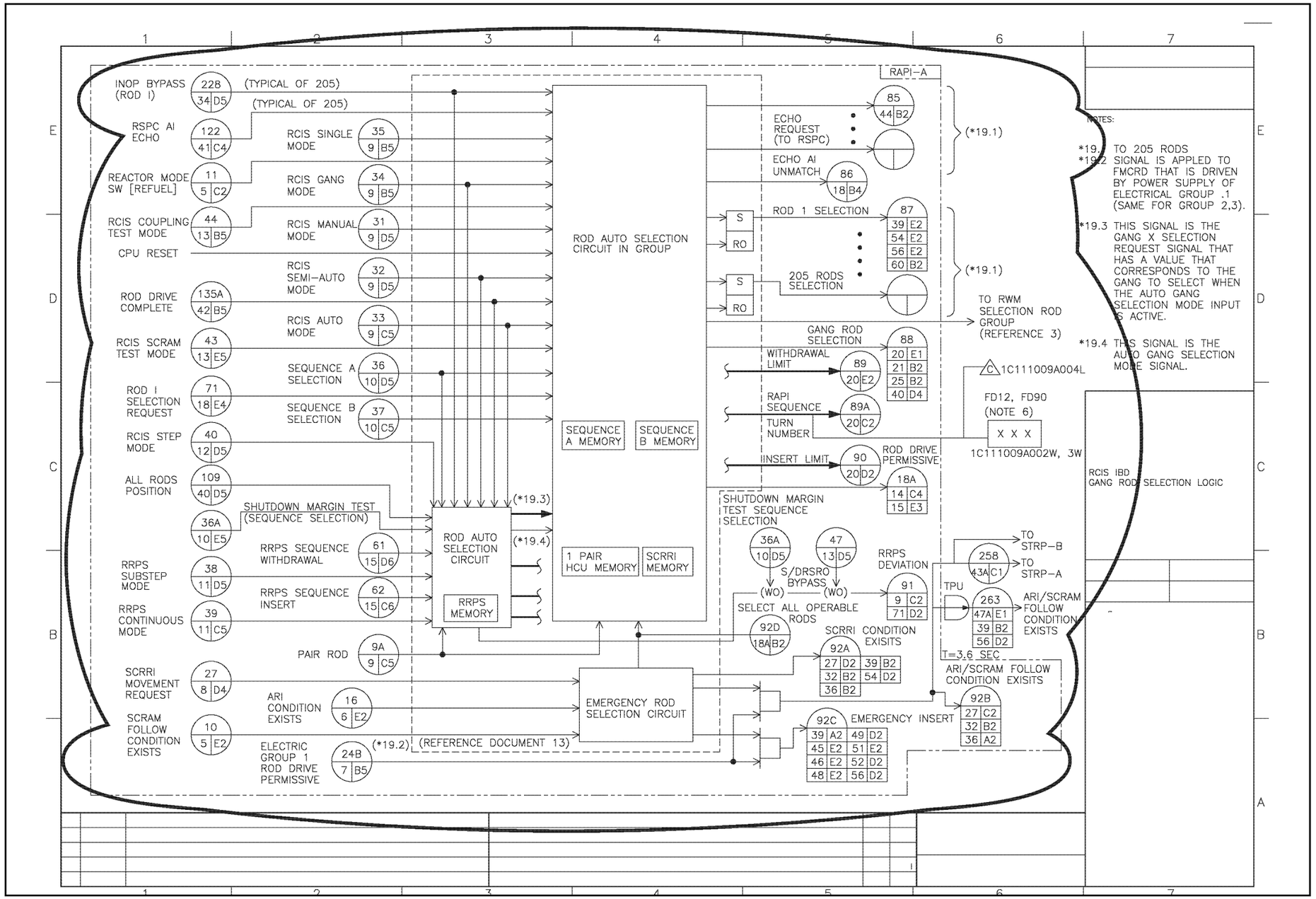

FIGURE 7.7-3 ROD CONTROL AND INFORMATION SYSTEM IBD (Sheet 19 of 114)

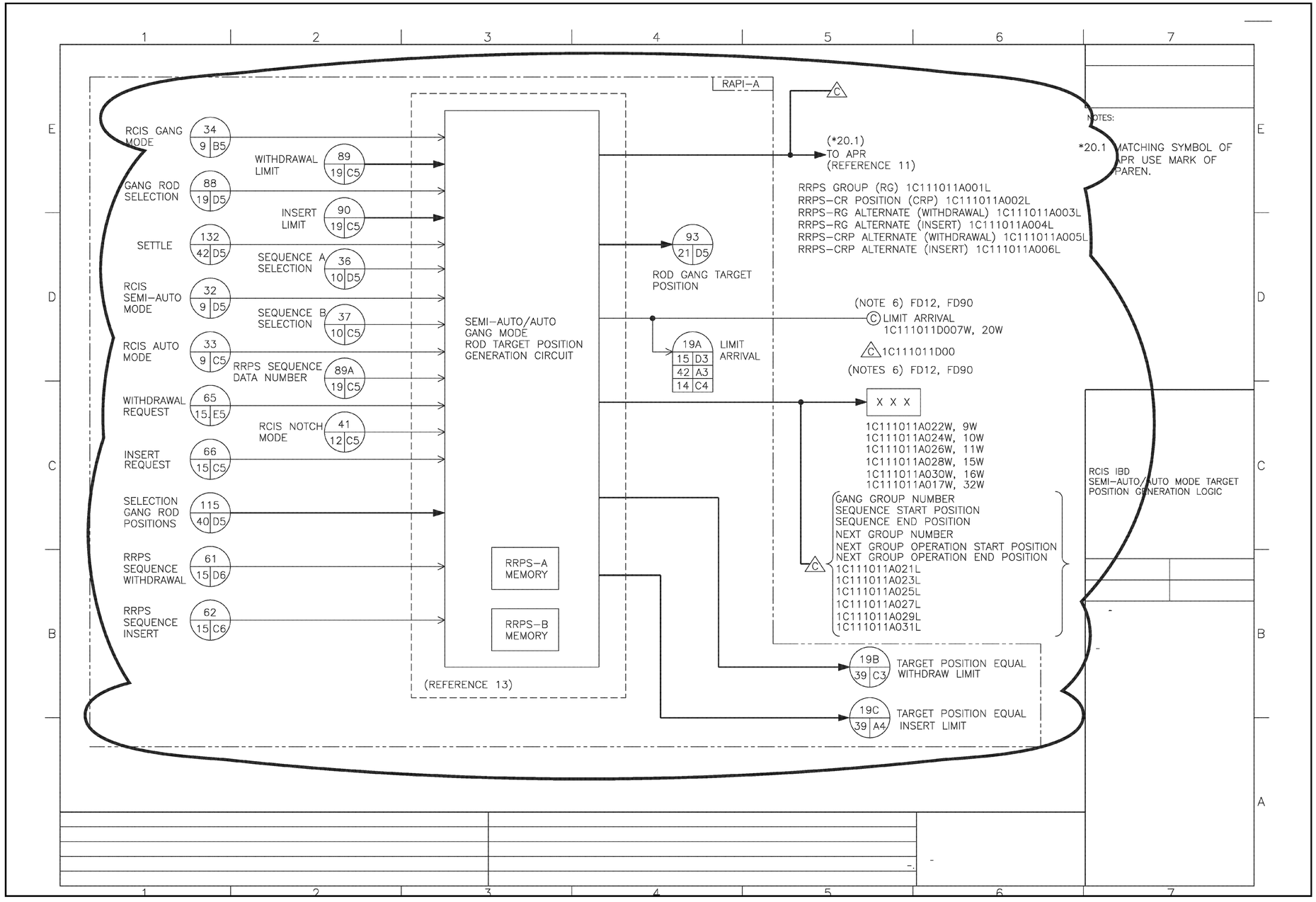

FIGURE 7.7-3 ROD CONTROL AND INFORMATION SYSTEM IBD (Sheet 20 of 114)

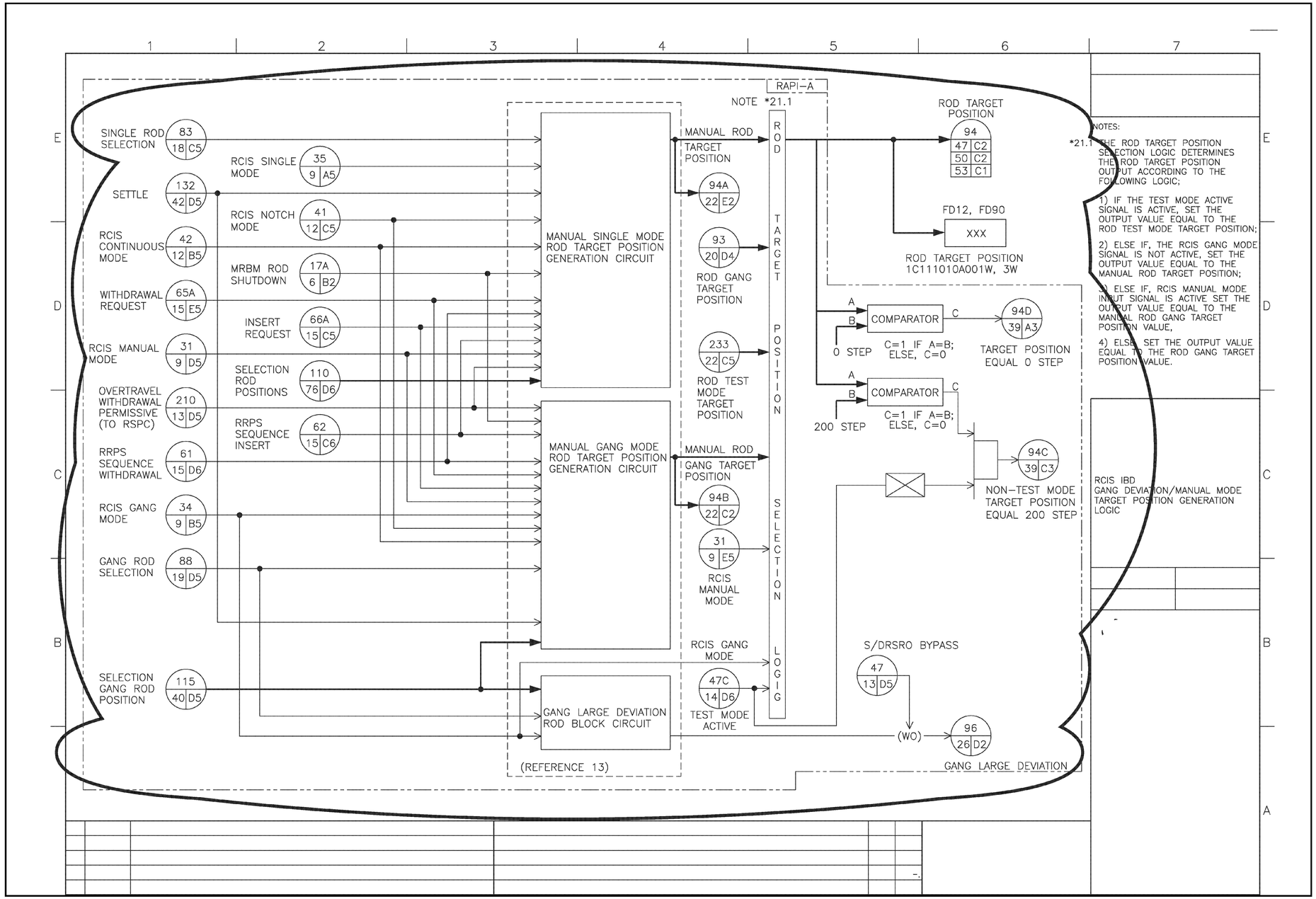

FIGURE 7.7-3 ROD CONTROL AND INFORMATION SYSTEM IBD (Sheet 21 of 114)

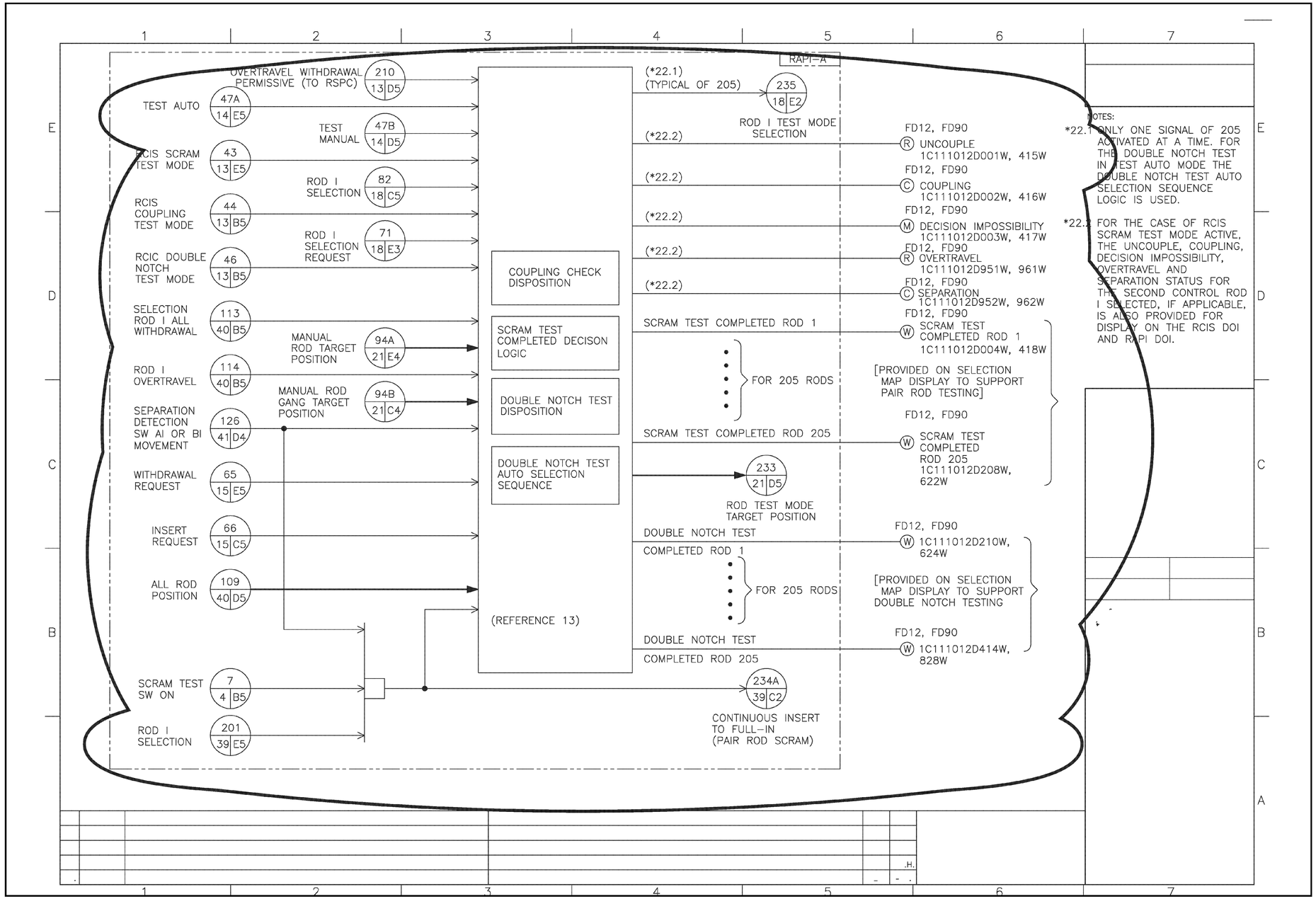

FIGURE 7.7-3 ROD CONTROL AND INFORMATION SYSTEM IBD (Sheet 22 of 114)

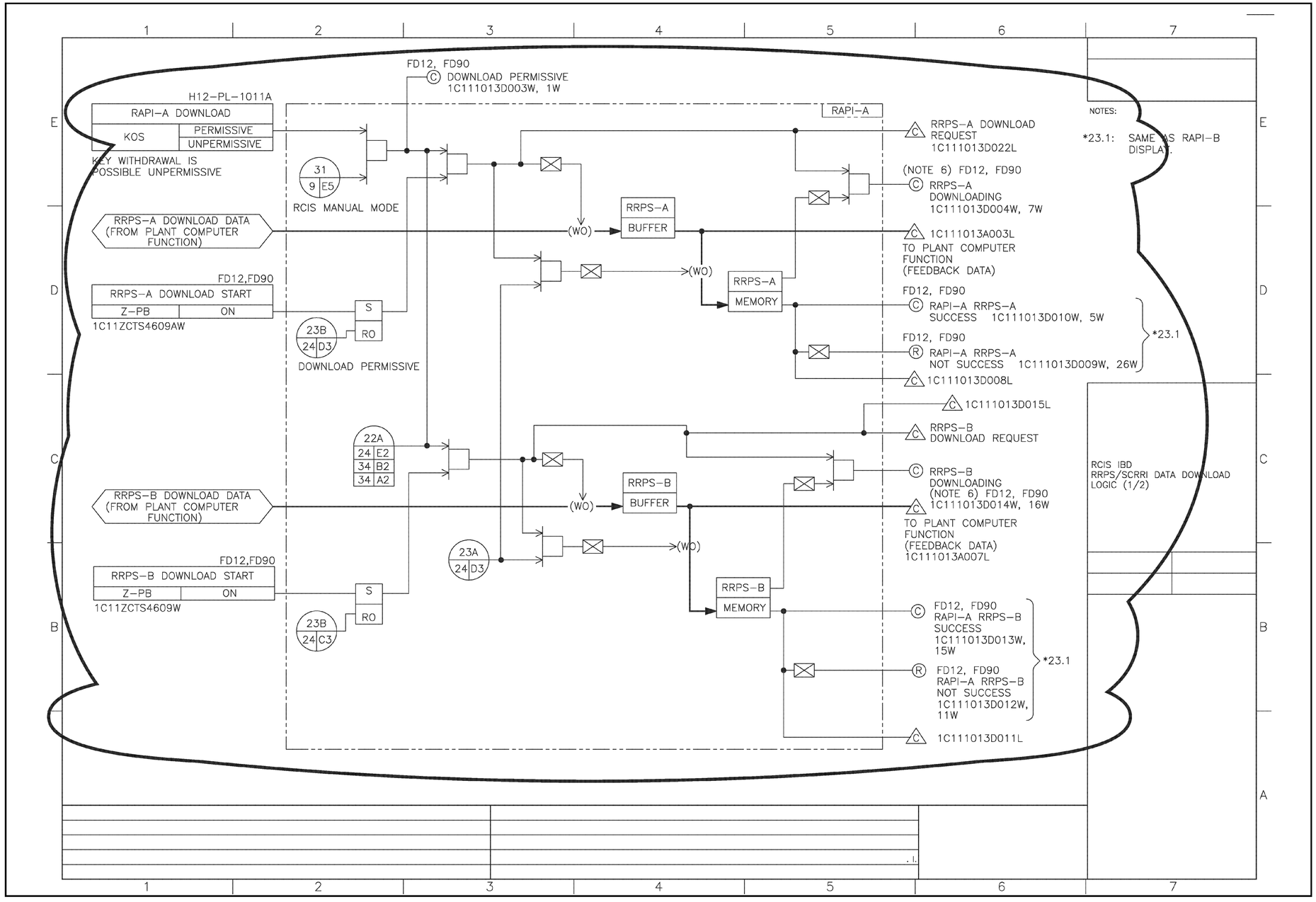

FIGURE 7.7-3 ROD CONTROL AND INFORMATION SYSTEM IBD (Sheet 23 of 114)

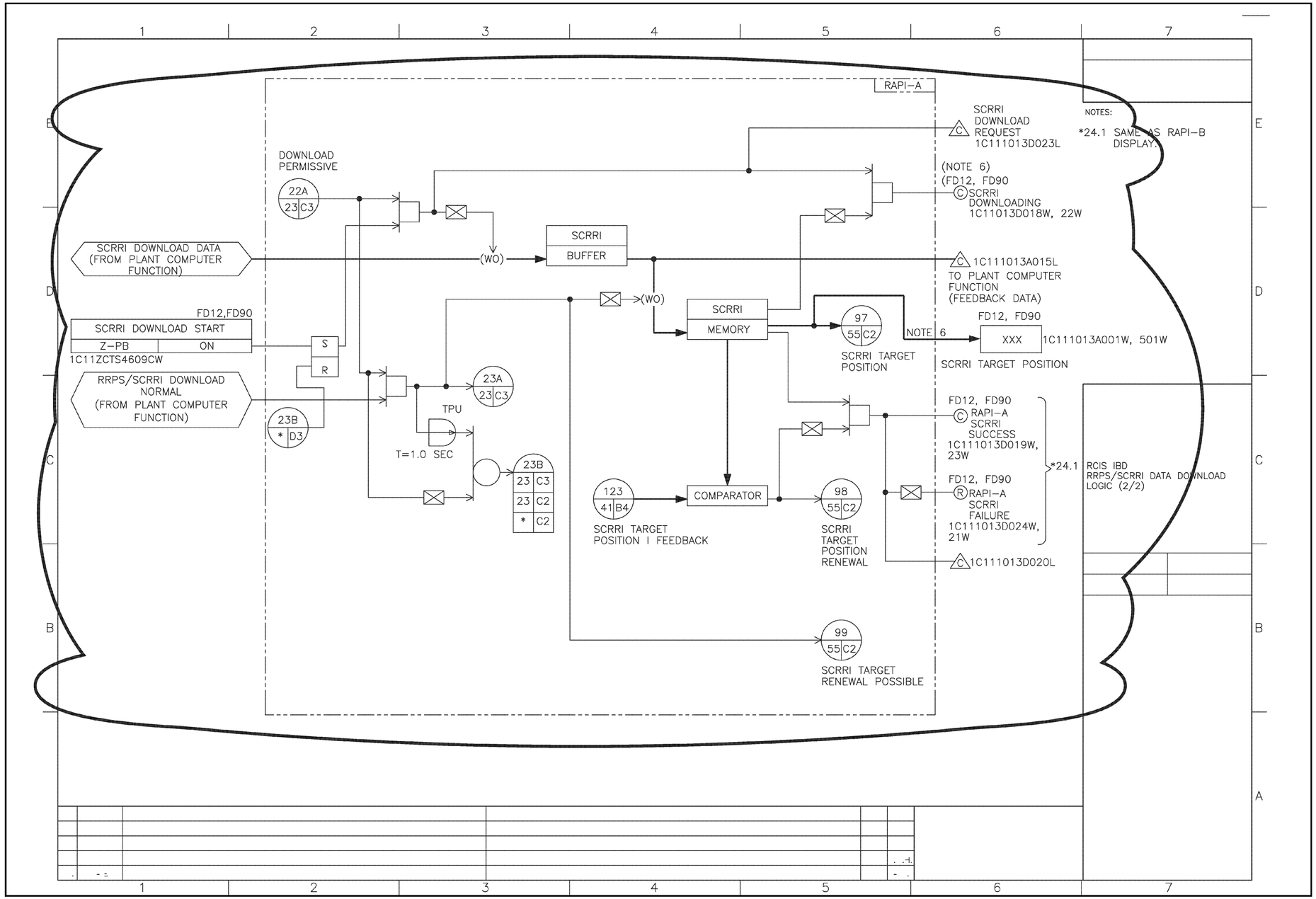

FIGURE 7.7-3 ROD CONTROL AND INFORMATION SYSTEM IBD (Sheet 24 of 114)

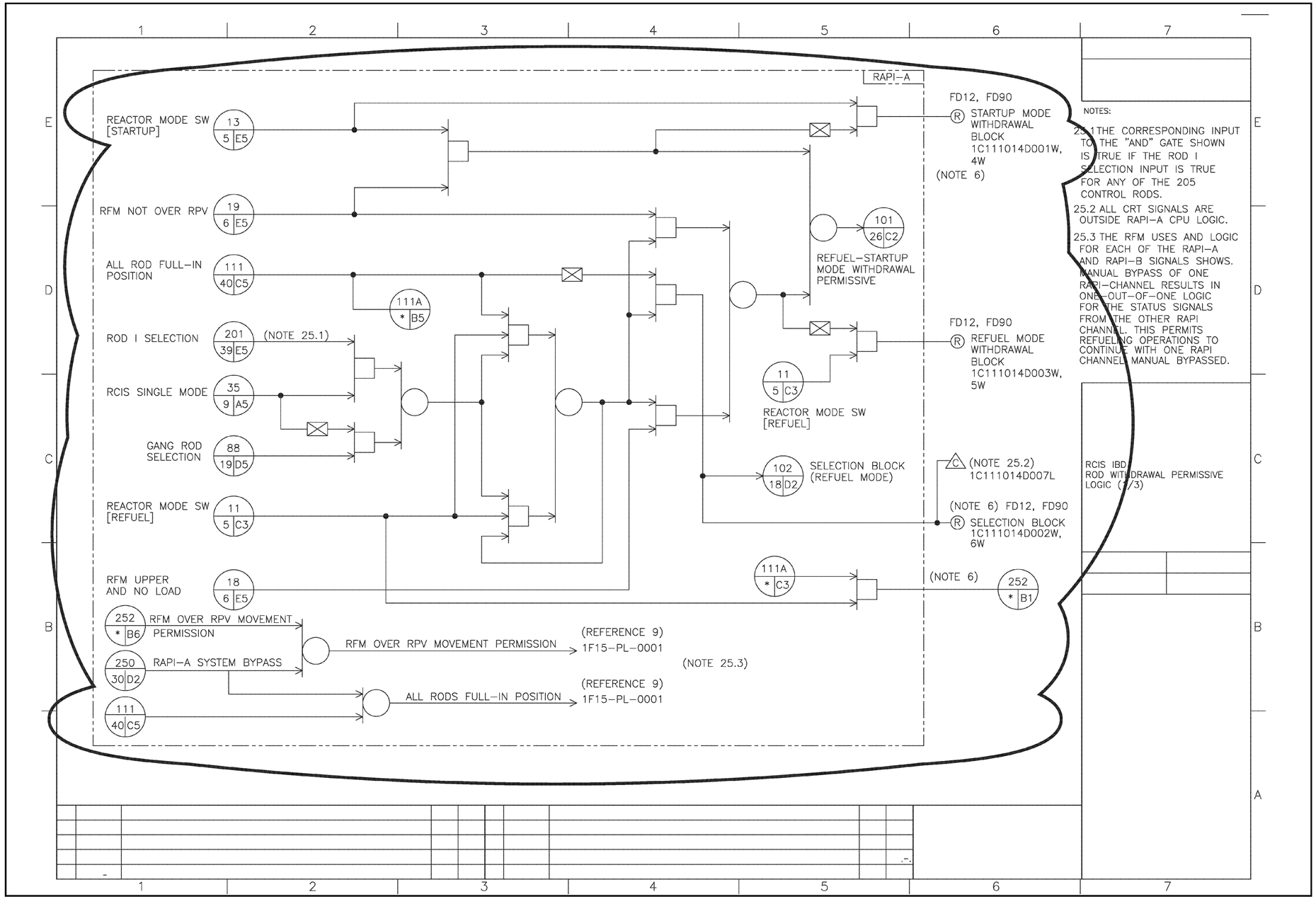

FIGURE 7.7-3 ROD CONTROL AND INFORMATION SYSTEM IBD (Sheet 25 of 114)

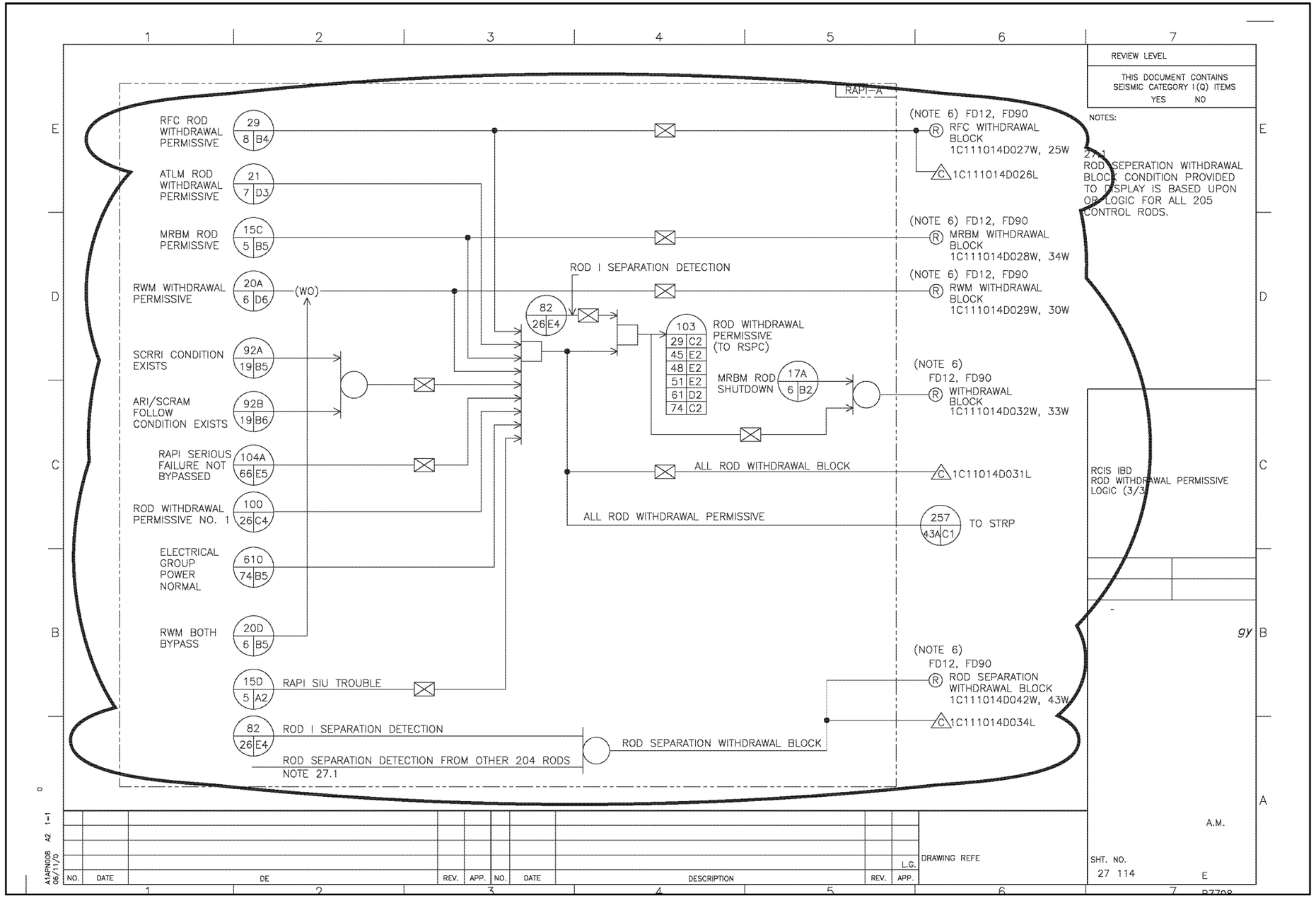

FIGURE 7.7-3 ROD CONTROL AND INFORMATION SYSTEM IBD (Sheet 27 of 114)

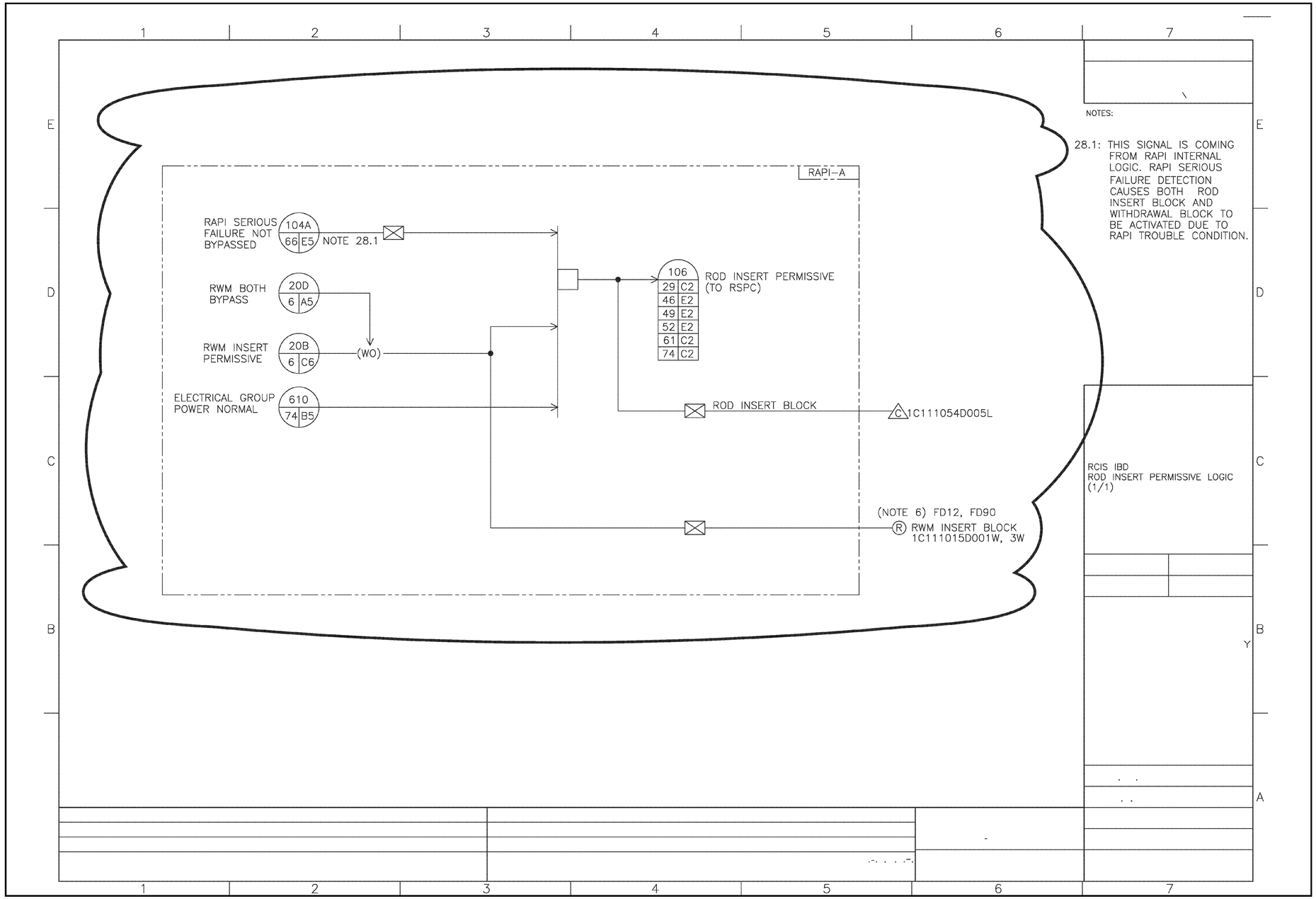

FIGURE 7.7-3 ROD CONTROL AND INFORMATION SYSTEM IBD (Sheet 28 of 114)

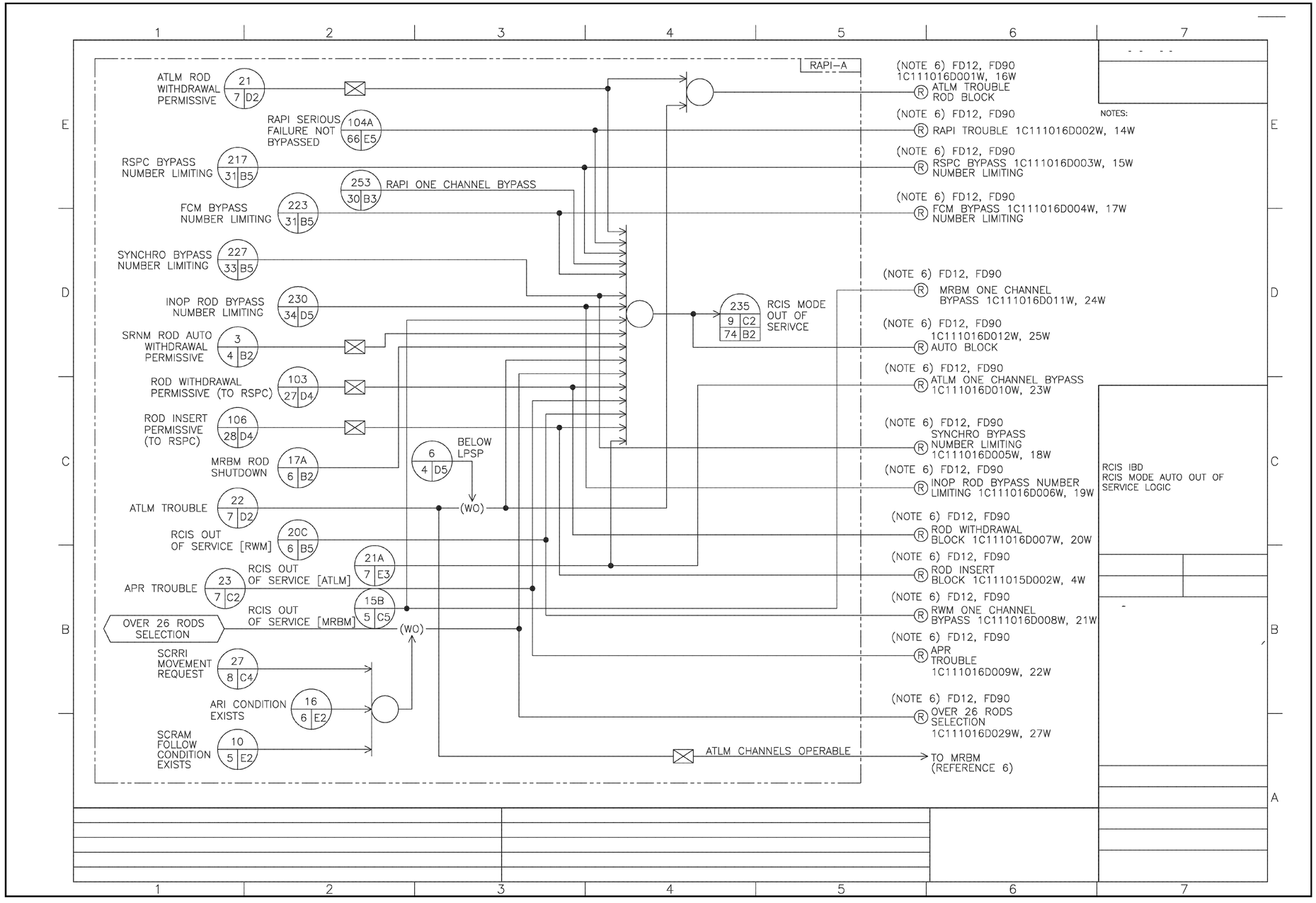

FIGURE 7.7-3 ROD CONTROL AND INFORMATION SYSTEM IBD (Sheet 29 of 114)

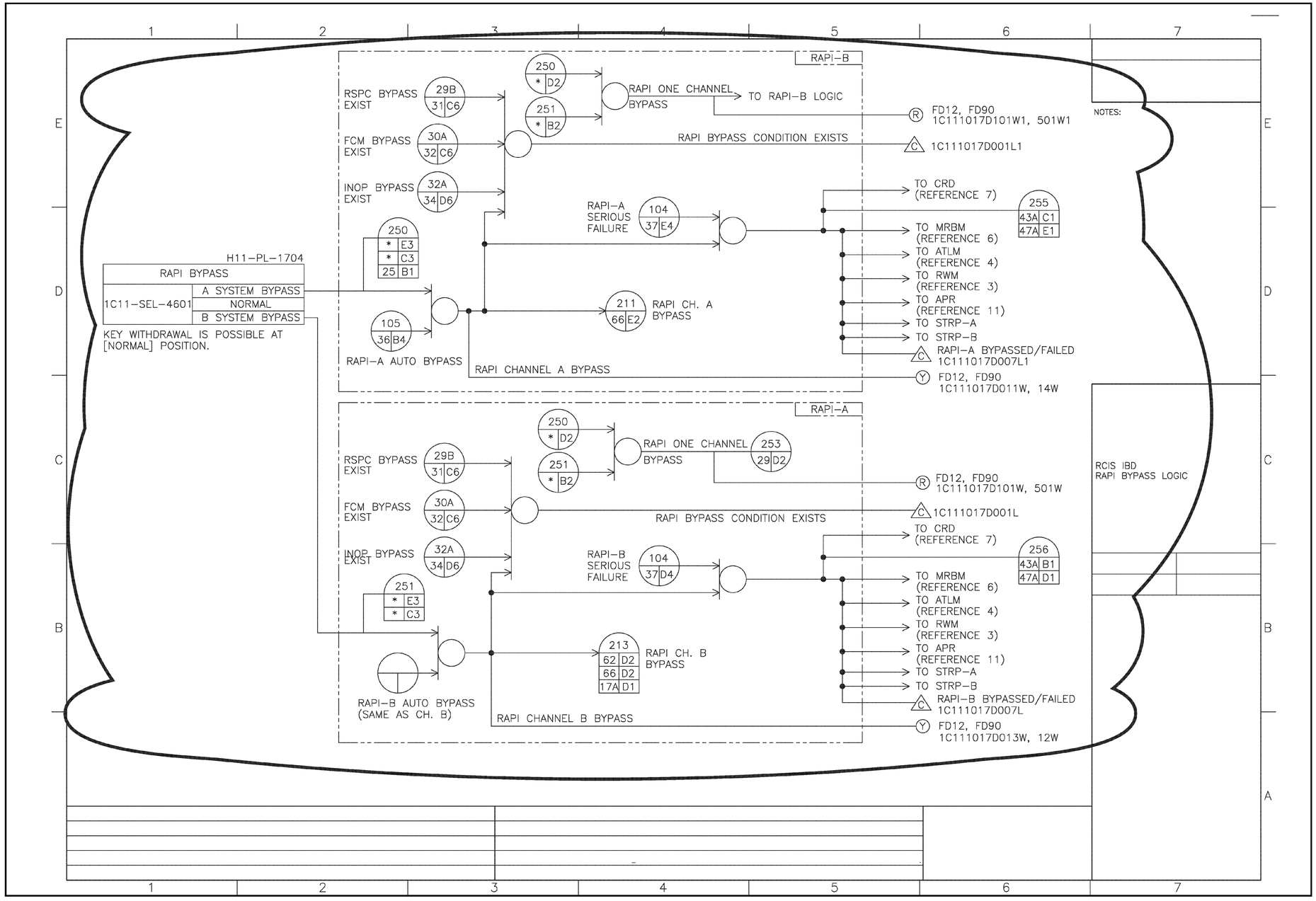

FIGURE 7.7-3 ROD CONTROL AND INFORMATION SYSTEM IBD (Sheet 30 of 114)

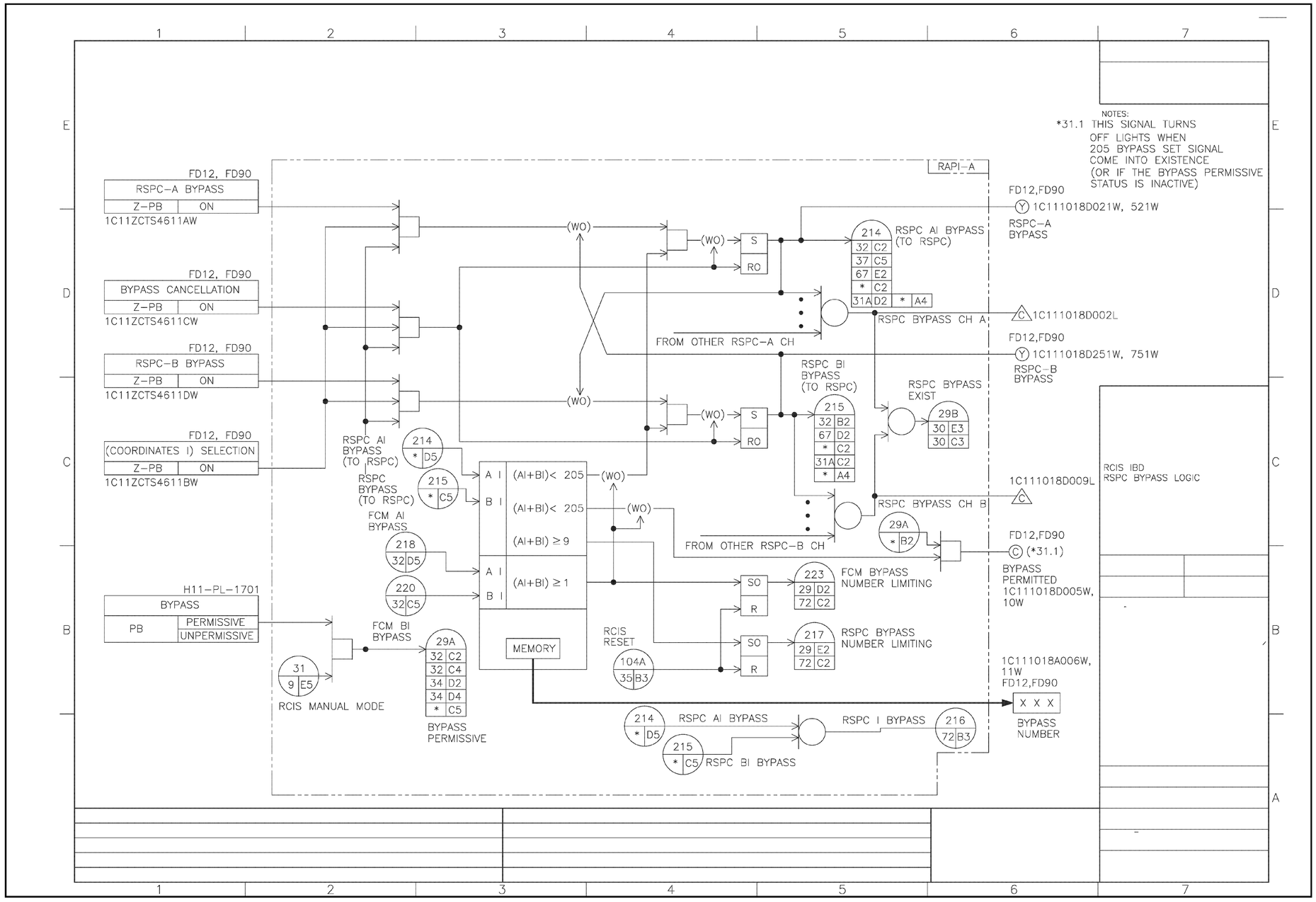

FIGURE 7.7-3 ROD CONTROL AND INFORMATION SYSTEM IBD (Sheet 31 of 114)

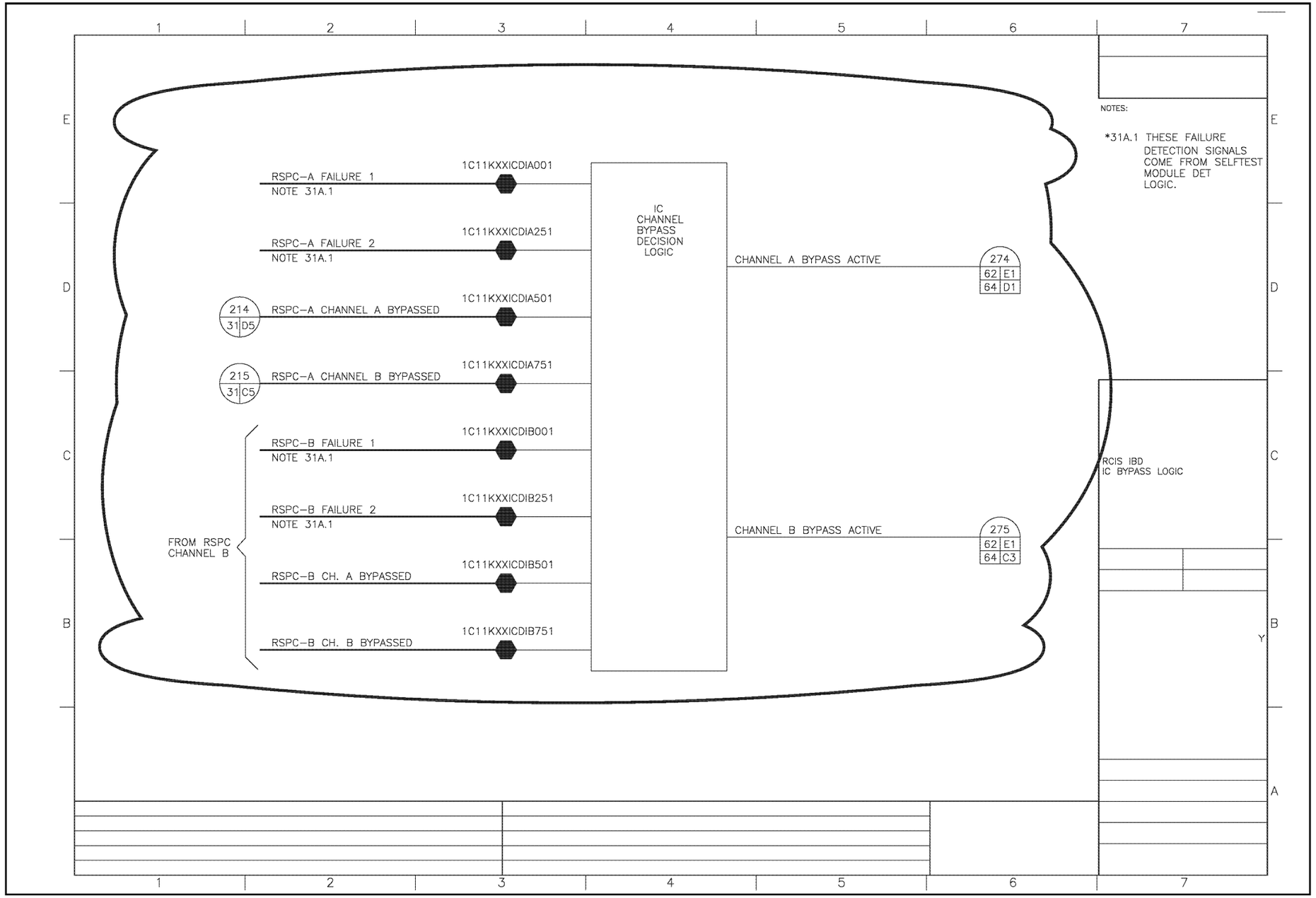

FIGURE 7.7-3 ROD CONTROL AND INFORMATION SYSTEM IBD (Sheet 31a of 114)

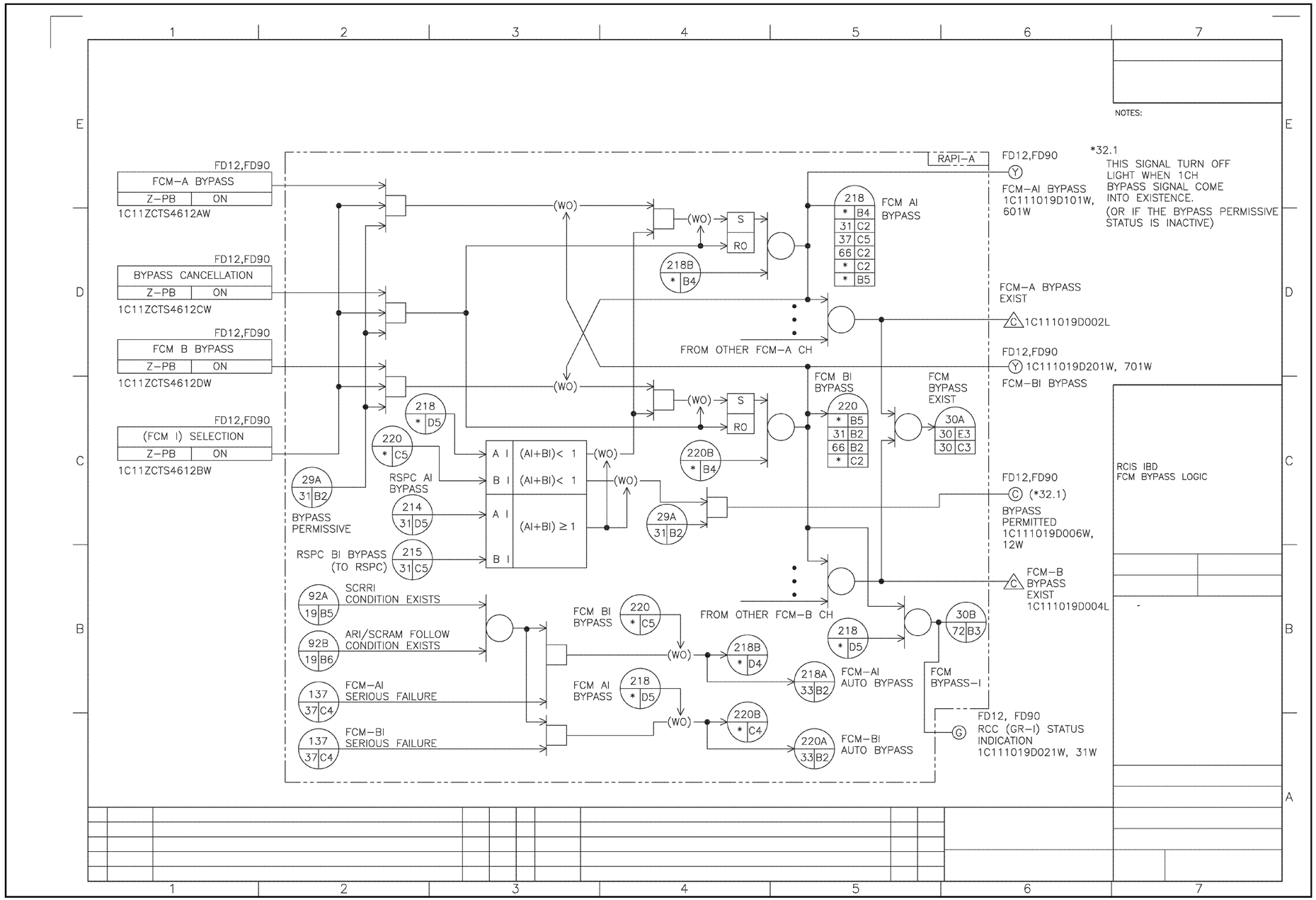

FIGURE 7.7-3 ROD CONTROL AND INFORMATION SYSTEM IBD (Sheet 32 of 114)

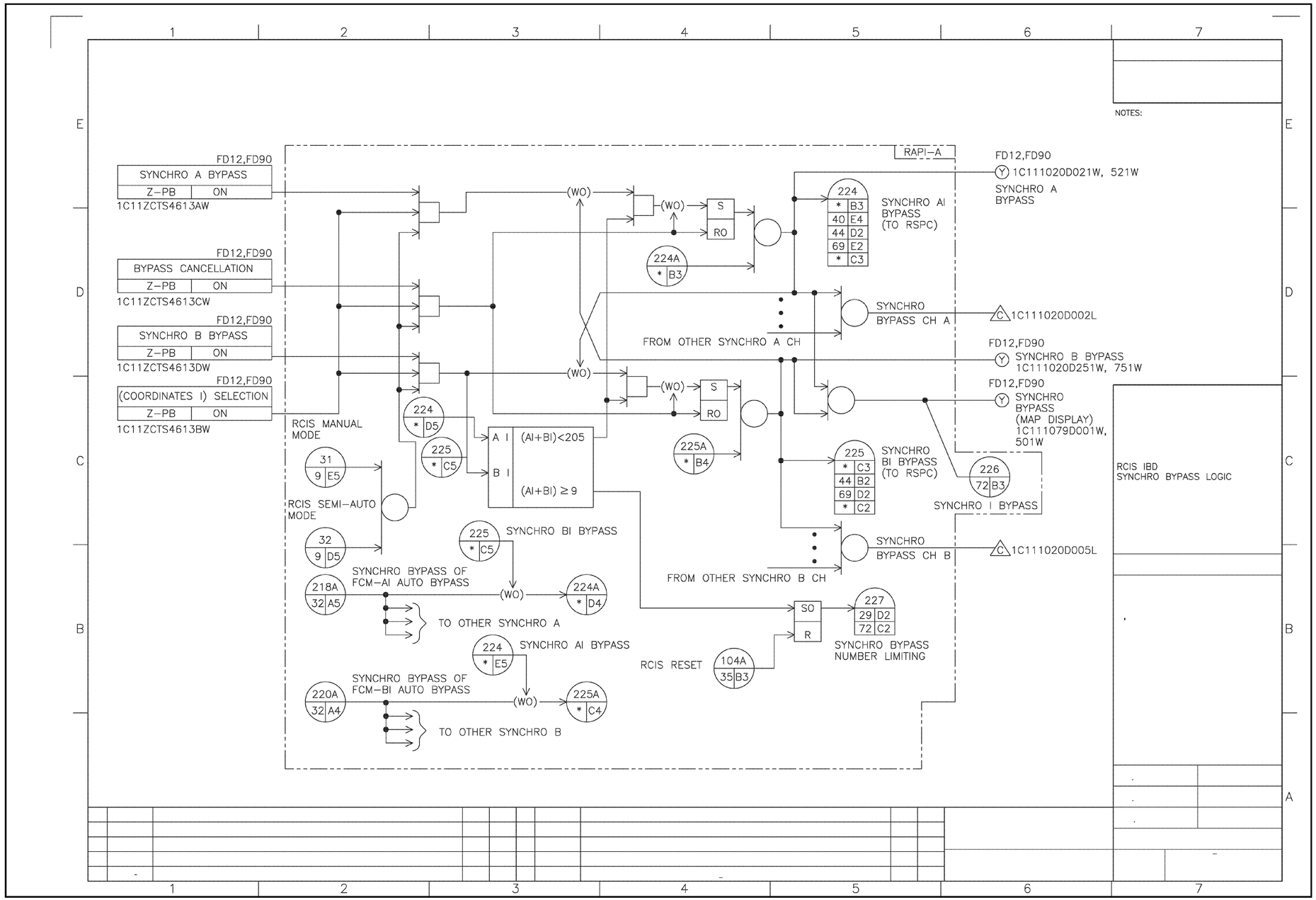

FIGURE 7.7-3 ROD CONTROL AND INFORMATION SYSTEM IBD (Sheet 33 of 114)

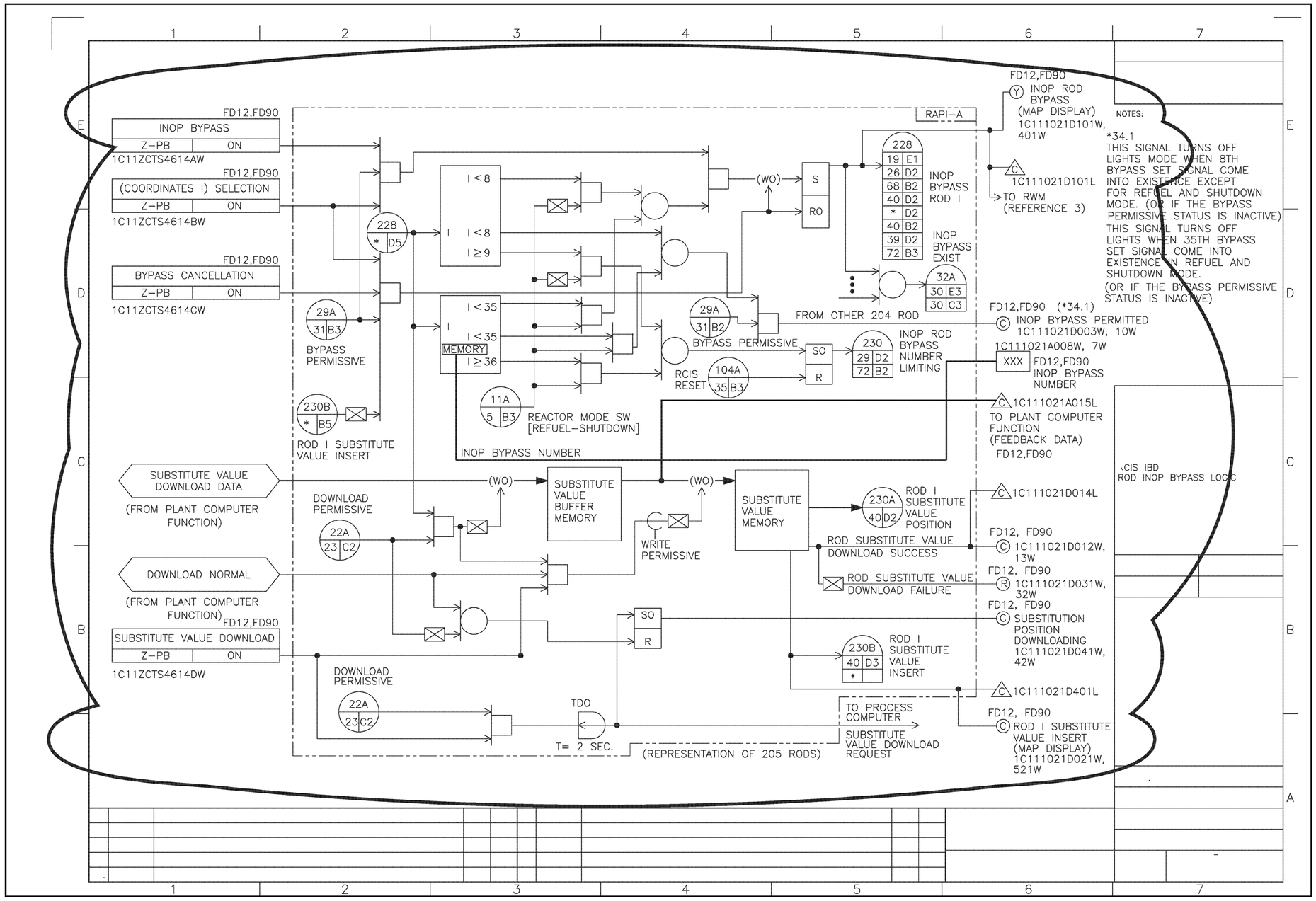

FIGURE 7.7-3 ROD CONTROL AND INFORMATION SYSTEM IBD (Sheet 34 of 114)

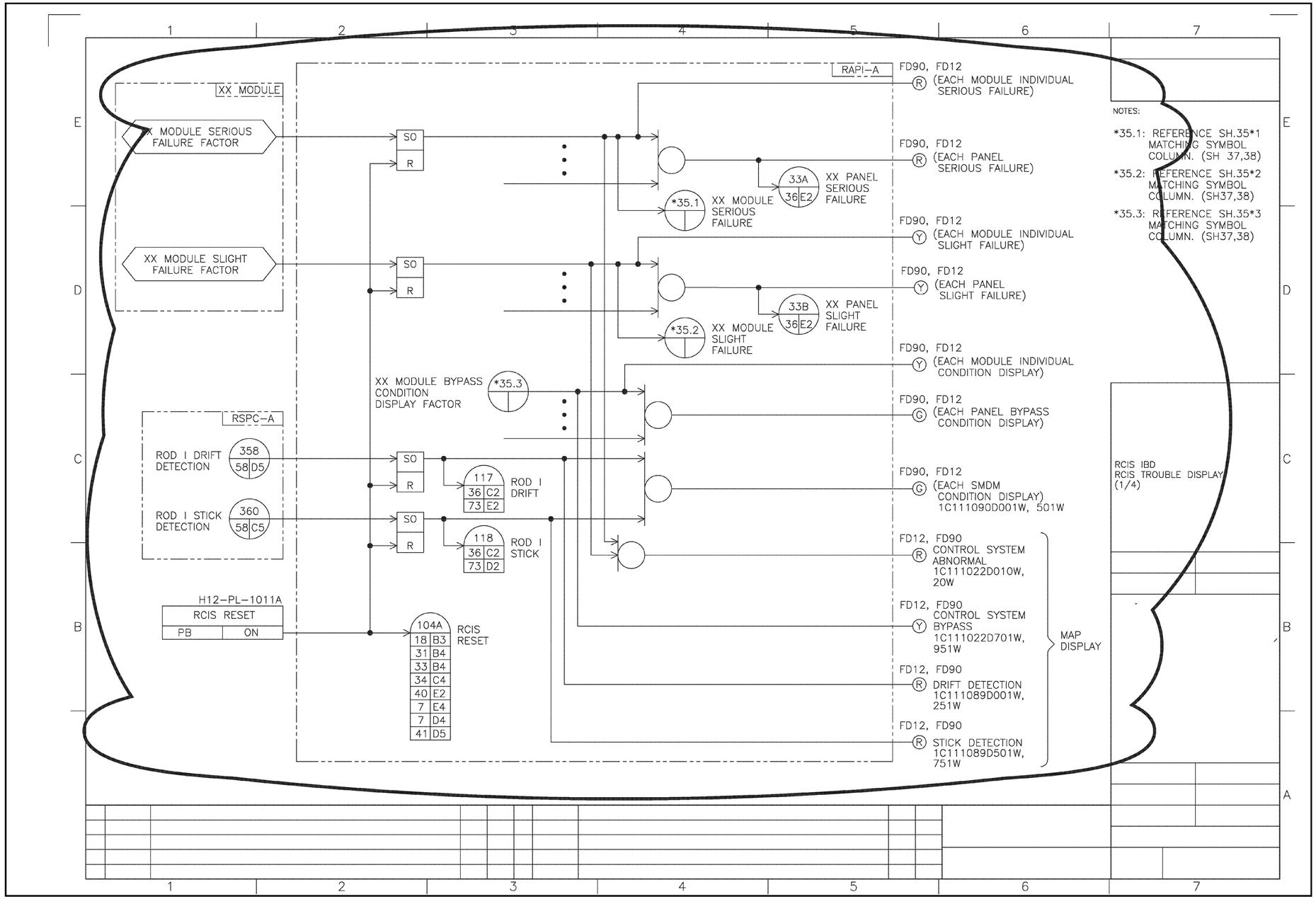

FIGURE 7.7-3 ROD CONTROL AND INFORMATION SYSTEM IBD (Sheet 35 of 114)

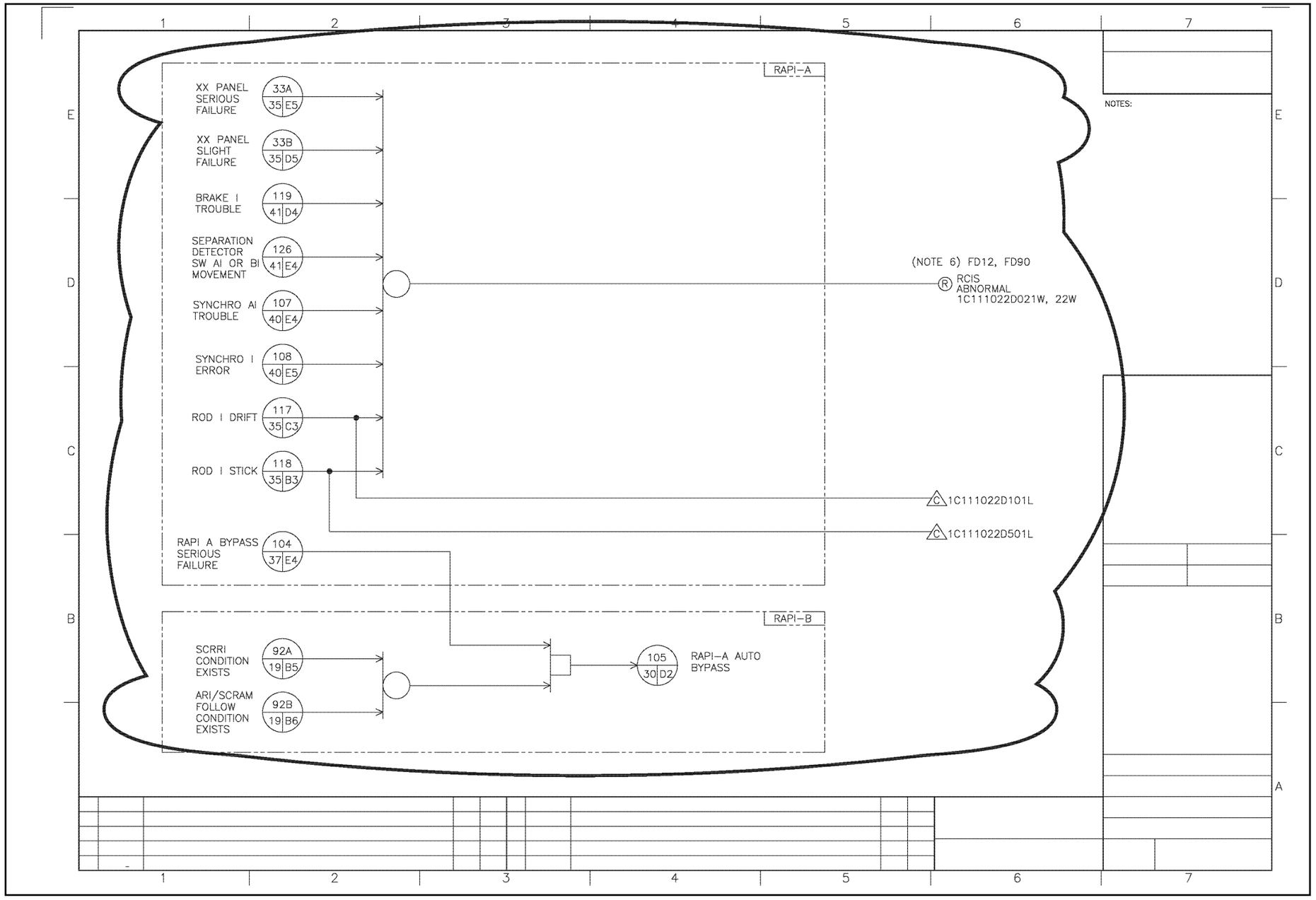

FIGURE 7.7-3 ROD CONTROL AND INFORMATION SYSTEM IBD (Sheet 36 of 114)

NO	PANEL NO	PANEL ABBREVIATION	MODULE ABBREVIATION	SERIOUS FAILURE (R) FACTOR	*1 MATCHING SYMBOL	SLIGHT FAILURE (Y) FACTOR	*2 MATCHING SYMBOL	CONDITION DISPLAY (G) *3 MATCHING SYMBOL	CONDITION DISPLAY (G) FACTOR	NOTES
1	H12-PL-1011A H12-PL-1011B	RAPI	—	1. CPU ABNORMAL. 2. POWER SUPPLY SYSTEM ABNORMAL. 3. AC SUPPLY BOTH SUPPLY ABNORMAL. 4. RAPI CROSS-CHANNEL NON CONFORMITY FAILURE *37.1	104 / 30 D4 / 30 C4 / 36 B2 / 66 E4	1. FAN ABNORMAL. 2. HIGH TEMPERATURE IN PANELS. 3. AC SUPPLY (ONE SIDE) SUPPLY ABNORMAL.	35L / 71 C2	—	—	
2	H12-PL-1013	STRAP	—	1. COMMUNICATION ERROR	35A / 71 C2			—	—	
3	C11-PL-0009A~0009Z	RCC	—	1. POWER SUPPLY SYSTEM ABNORMAL. 2. AC SUPPLY AND DC SUPPLY ABNORMAL. 3. SYNCHRO SUPPLY SYSTEM ABNORMAL.	35B / 67 C2	1. FAN ABNORMAL. 2. HIGH TEMPERATURE IN PANEL. 3. AC SUPPLY OR DC SUPPLY ABNORMAL.	35N / 71 B2	—	—	
			FCM	1. CPU HARD ABNORMAL.	137 / 32 A2 / 32 B2 / 66 D2 / 73 B2	—	—	218 / 32 D5	1. BYPASS	
			RSPC	1. RSPC HARD ABNORMAL. (SELF DIAGNOSIS ABNORMAL) 2. SELECTION ECHO UNMATCH. *37.2	369A / 61 E2 / 67 E2 / 73 B2	—	—	214 / 31 D5	1. BYPASS	*37.2 84 / 18 B6 INPUT FROM SH. 18
			SDC	1. SYNCHRO SIGNAL CHANGE. 2. DRIVE FIELD DEVIATION. 3. SDC HARD ABNORMAL.	35C / 40 E2	—	—	—	—	
4	C11-PL-0010A~0010F	RBCC	—	1. BRAKE POWER SUPPLY ABNORMAL. (BOTH SYSTEM)	35D / 67 B2	1. POWER SUPPLY ABNORMAL. (ONE SIDE SYSTEM)	35P / 70 D2	—	—	
			RBC	1. BRAKE MISTAKE DRIVE. 2. BRAKE MISTAKE UNDRIVE. 3. BRAKE MISTAKE SIGNAL UNMATCH.	35E / 41 C4 / 68 E2	—	—	—	—	

NOTES:

*37.1
RAPI NONCONFORMITY SURVEILLANCE OBJECT MANUAL, SEMI-AUTO, AUTO, SINGLE, GANG, STEP, NOTCH, CONTINUOUS, SUB-STEP, LOW SPEED, SCRAM TEST, COUPLING CHECK, DOUBLE NOTCH TEST, SEQUENCE A, SEQUENCE B, SHUTDOWN MARGIN TEST.

*37.2
SEE NOTES IN TABLE.

FIGURE 7.7-3 ROD CONTROL AND INFORMATION SYSTEM IBD (Sheet 37 of 114)

NO	PANEL NO	PANEL ABBREVIATION	MODULE ABBREVIATION	SERIOUS FAILURE (R) FACTOR	*1 MATCHING SYMBOL	SLIGHT FAILURE (Y) FACTOR	*2 MATCHING SYMBOL	CONDITION DISPLAY (G) *3 MATCHING SYMBOL	CONDITION DISPLAY (G) FACTOR	NOTES
5	C11-PL-0011A1 ~0011F4	FMDC	——	1. IC ABNORMAL. 2. SMDM ABNORMAL.	35F 67 B2			——	——	
			IC	1. IC HARD ABNORMAL. (IC ANSWERBACK ERROR) (*38.2) 2. TRANSMISSION ABNORMAL. 3. BOTH SYSTEM UNMATCH. (*38.1)	124 68 D2 73 A2			——	——	(*38.1) 382 62 D6 INPUT FROM SH, 62
			SMDM	1. OVER FREQUENCY. 2. MOTOR OVERLOAD.	35G 68 B2 73 A2	——	——	LIST IN SH. 35	1. DRIFT 2. STICK	(*38.2) 40A 42 E4 INPUT FROM SH, 42
6	C11-PL-0015A C11-PL-0015B	STRP	——	1. CPU ABNORMAL. 2. POWER SUPPLY SYSTEM ABNORMAL. 3. AC SUPPLY AND DC SUPPLY ABNORMAL.	35H 70 C2	1. FAN ABNORMAL. 2. HIGH TEMPERATURE IN PANEL. 3. AC SUPPLY OR DC SUPPLY ABNORMAL.	35S 70 C2	——	——	
			RSSM	1. RSSM HARD ABNORMAL. (REED SWITCH ABNORMAL)	35J 70 B2	——	——	——	——	

NOTES:

*38.1
SEE NOTES IN TABLE.

*38.2
SEE NOTES IN TABLE.

RCIS IBD
RCIS TROUBLE DISPLAY (4/4)

FIGURE 7.7-3 ROD CONTROL AND INFORMATION SYSTEM IBD (Sheet 38 of 114)

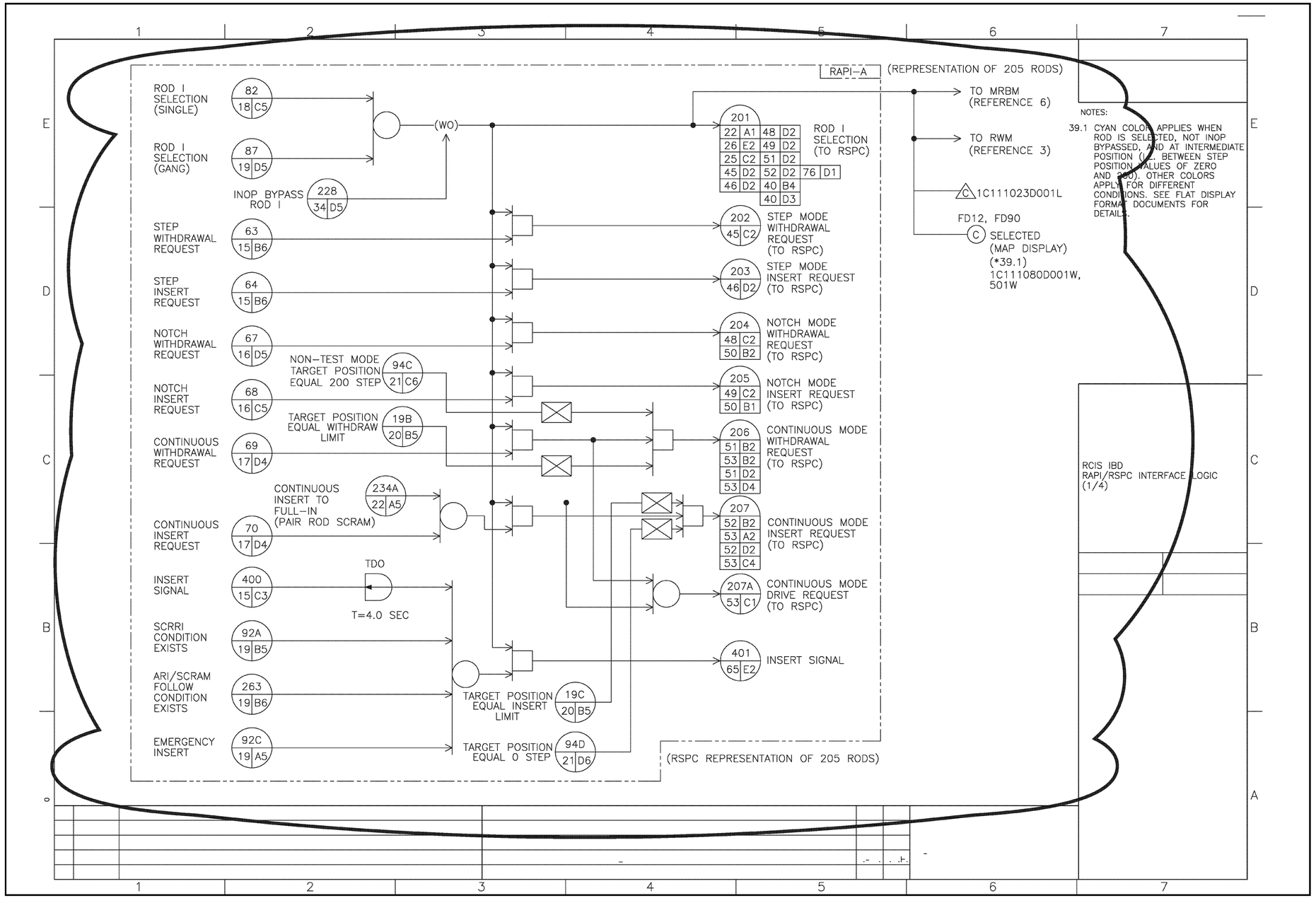

FIGURE 7.7-3 ROD CONTROL AND INFORMATION SYSTEM IBD (Sheet 39 of 114)

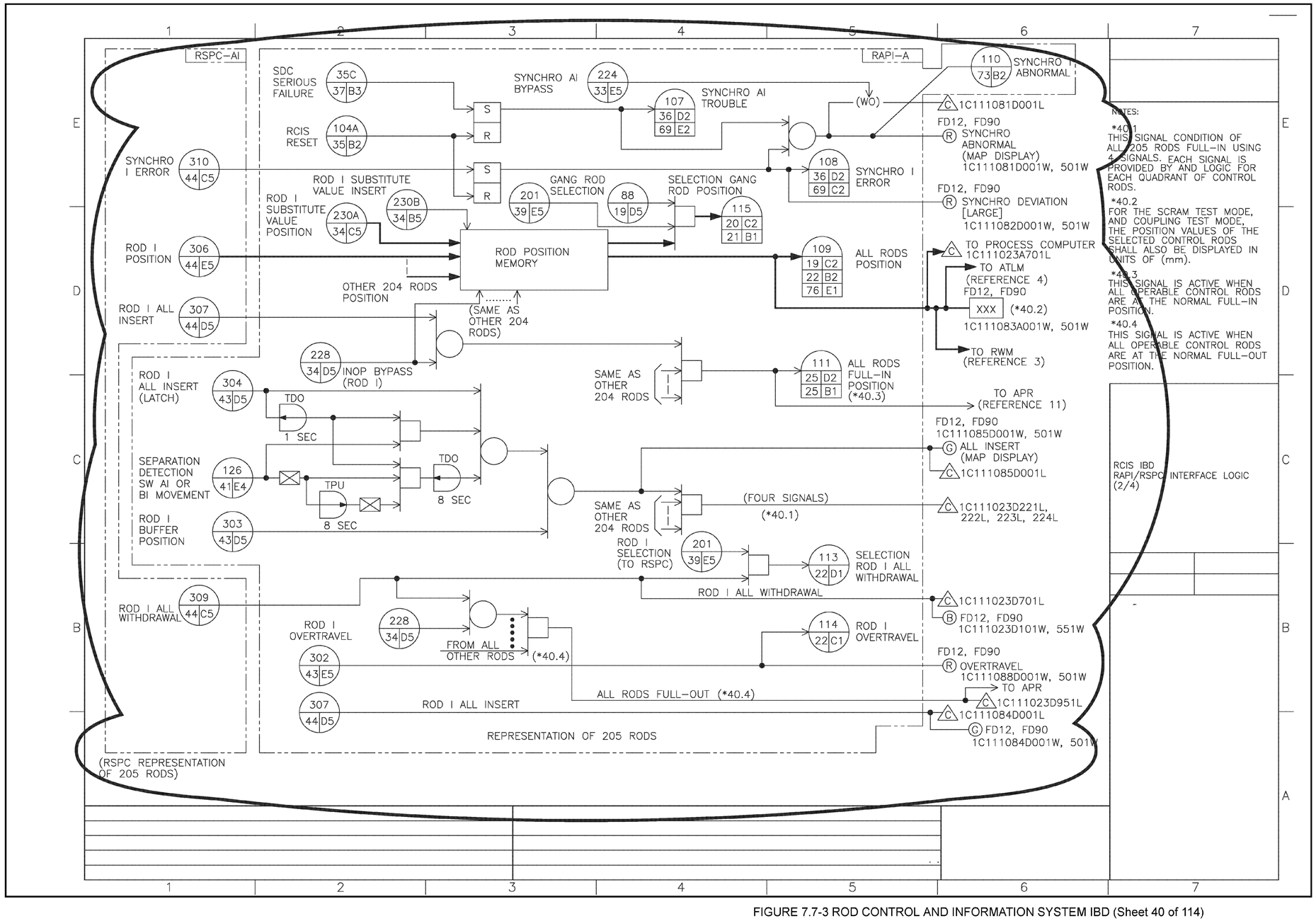

FIGURE 7.7-3 ROD CONTROL AND INFORMATION SYSTEM IBD (Sheet 40 of 114)

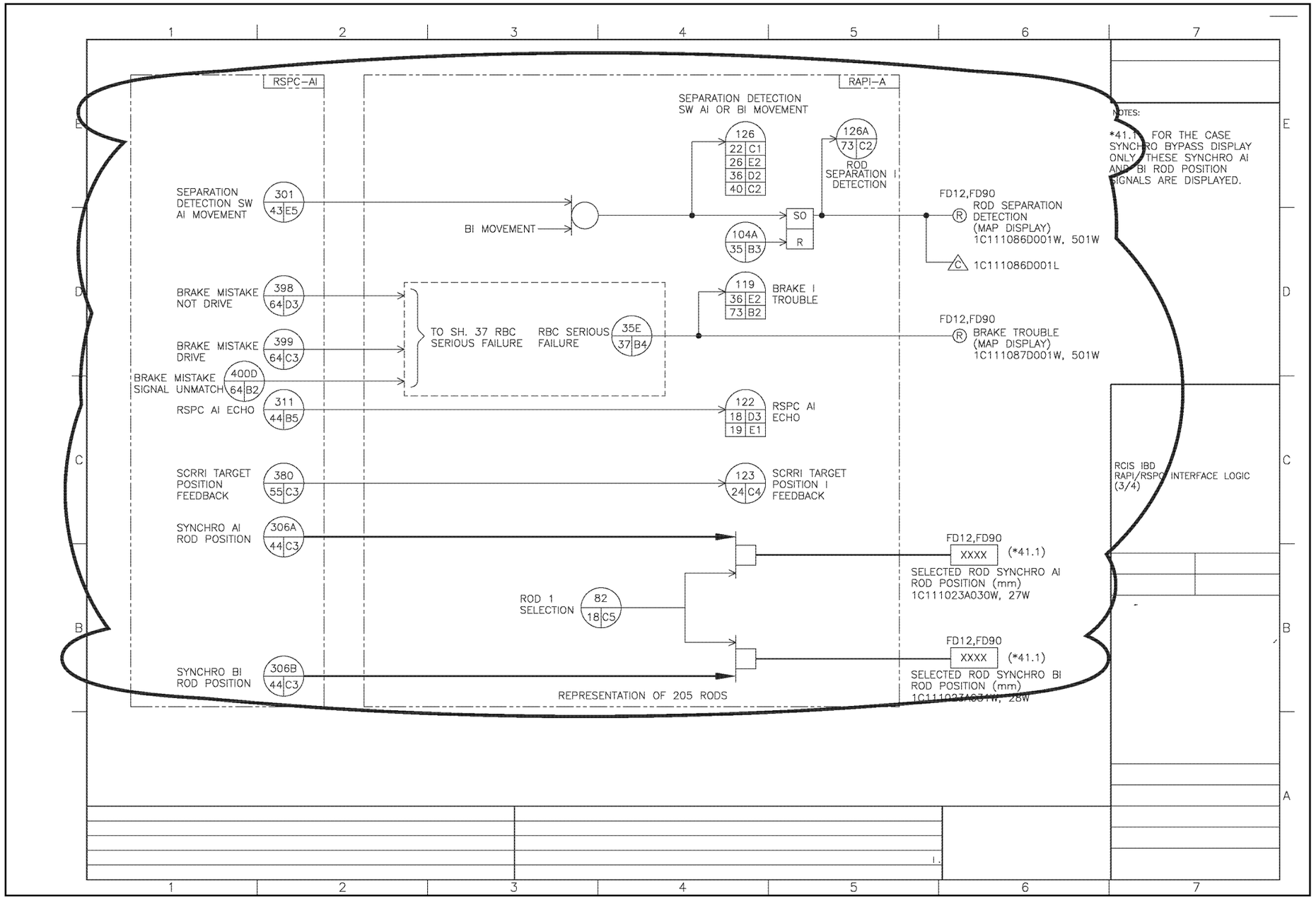

FIGURE 7.7-3 ROD CONTROL AND INFORMATION SYSTEM IBD (Sheet 41 of 114)

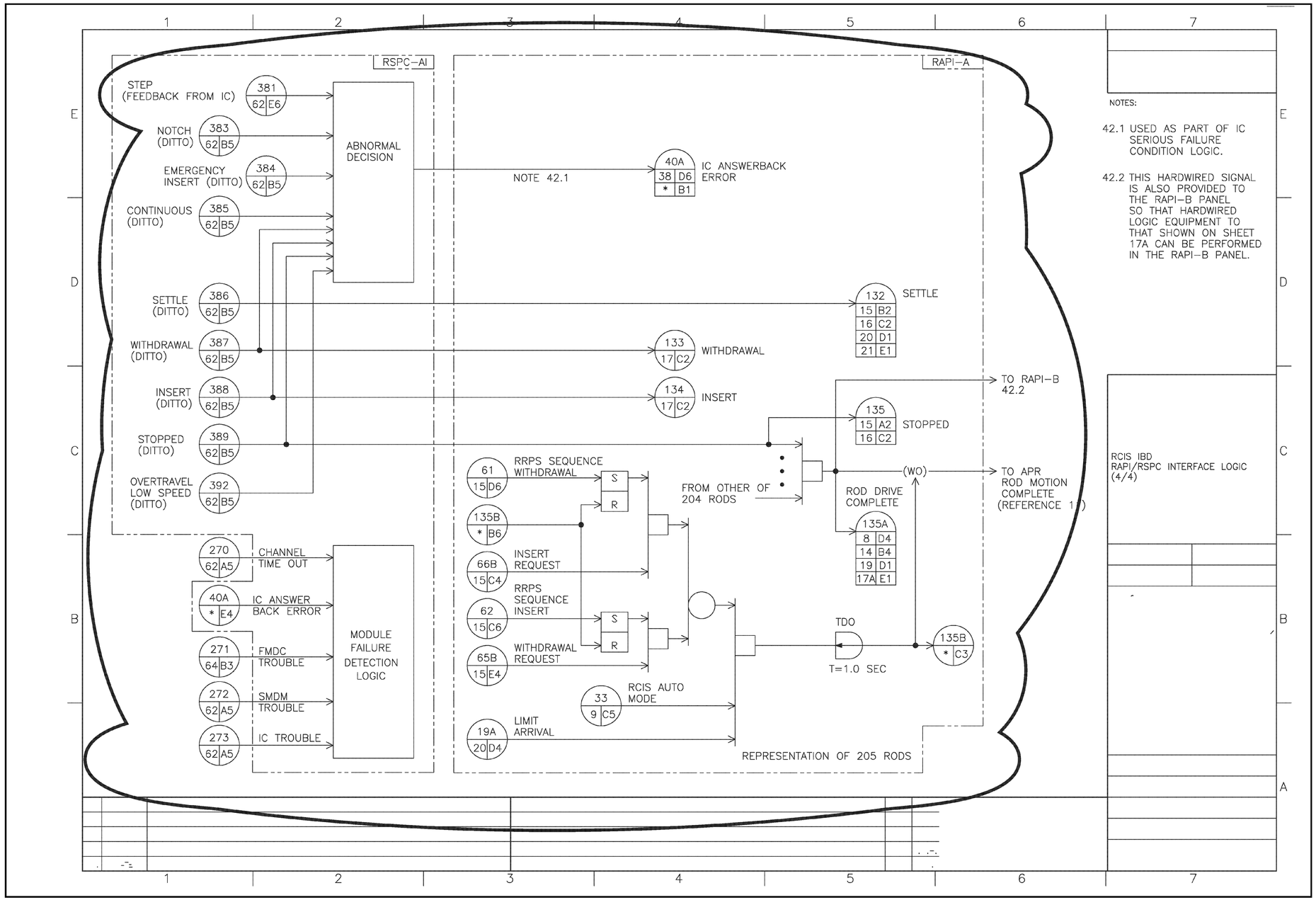

FIGURE 7.7-3 ROD CONTROL AND INFORMATION SYSTEM IBD (Sheet 42 of 114)

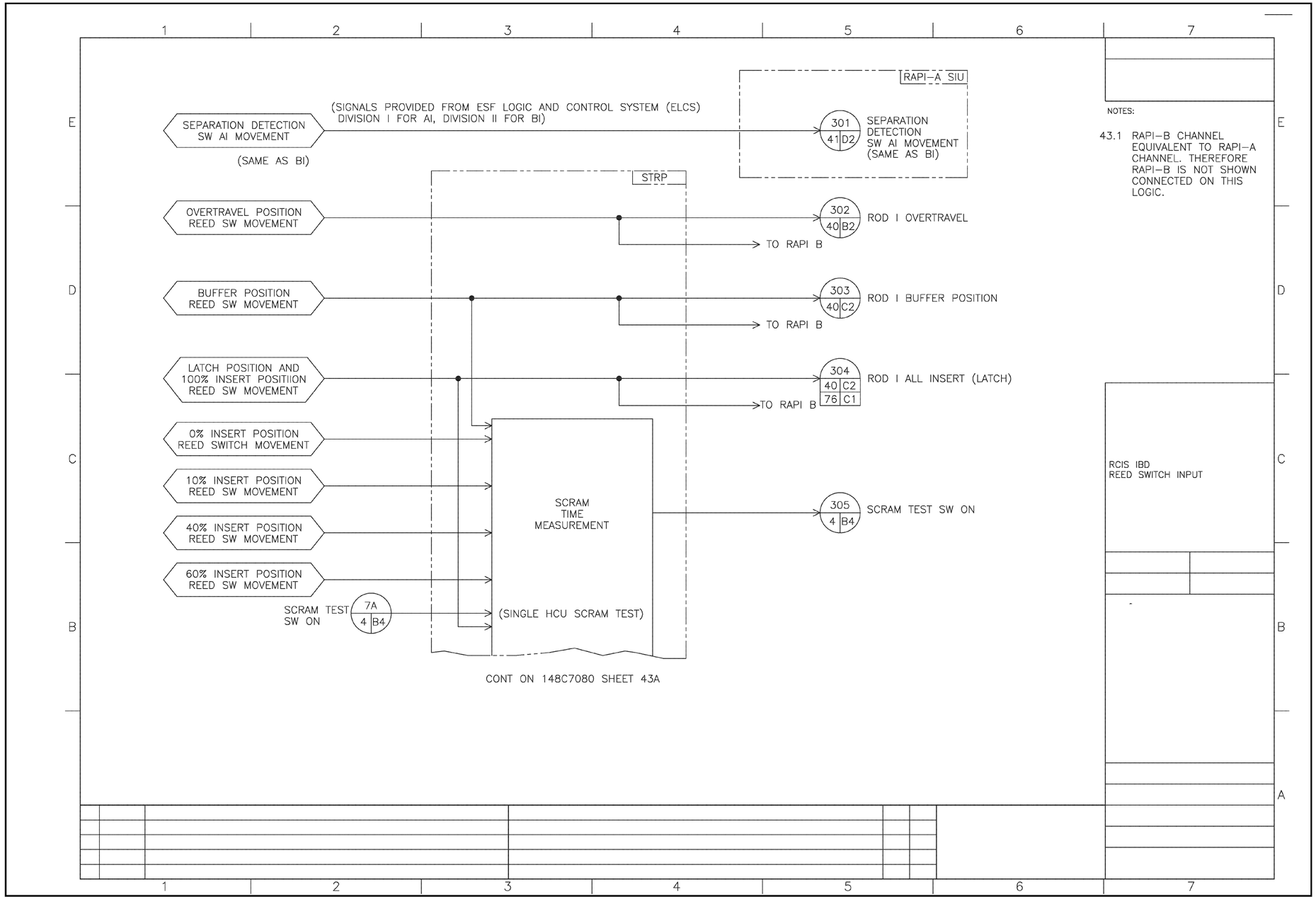

FIGURE 7.7-3 ROD CONTROL AND INFORMATION SYSTEM IBD (Sheet 43 of 114)

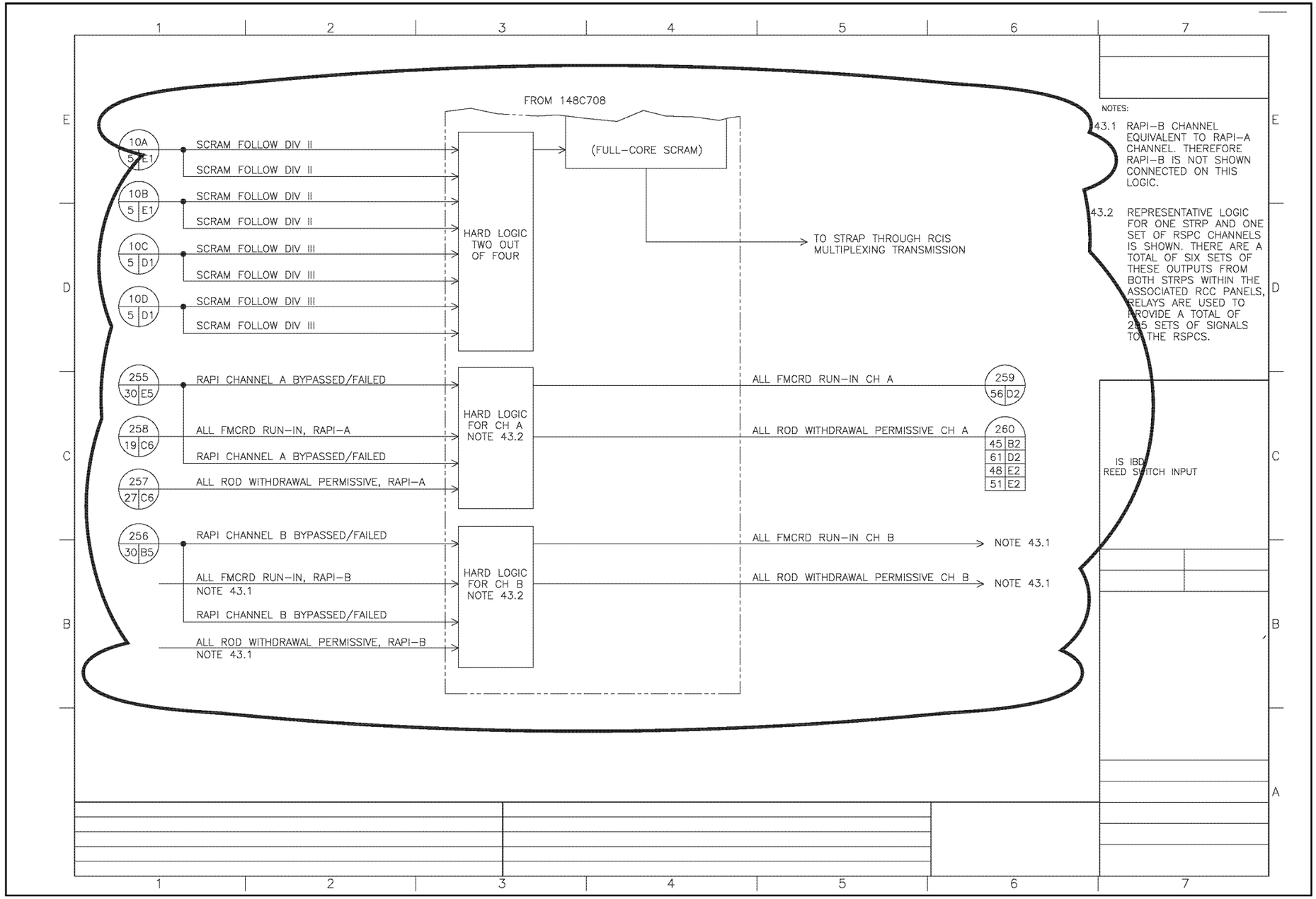

FIGURE 7.7-3 ROD CONTROL AND INFORMATION SYSTEM IBD (Sheet 43a of 114)

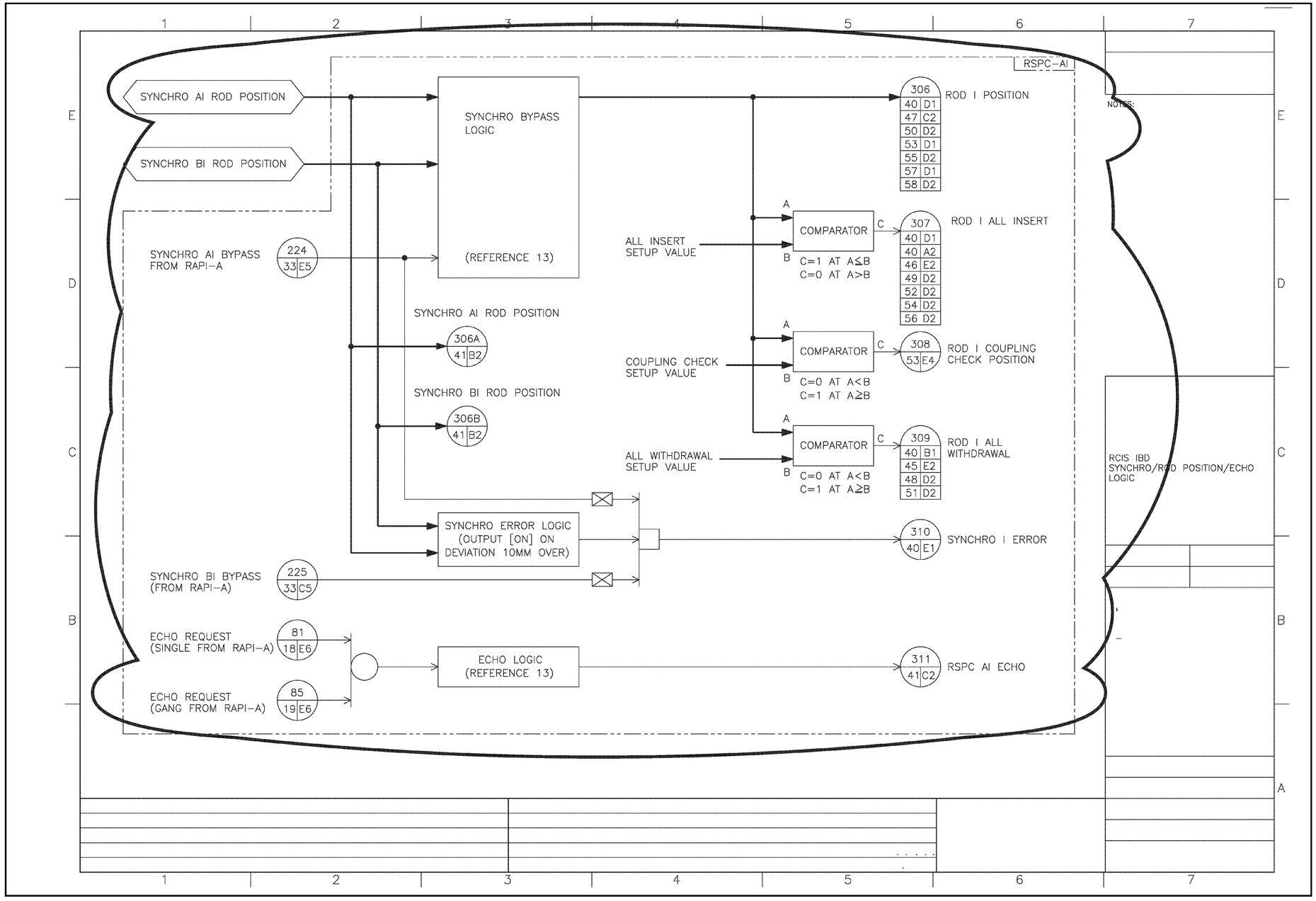

FIGURE 7.7-3 ROD CONTROL AND INFORMATION SYSTEM IBD (Sheet 44 of 114)

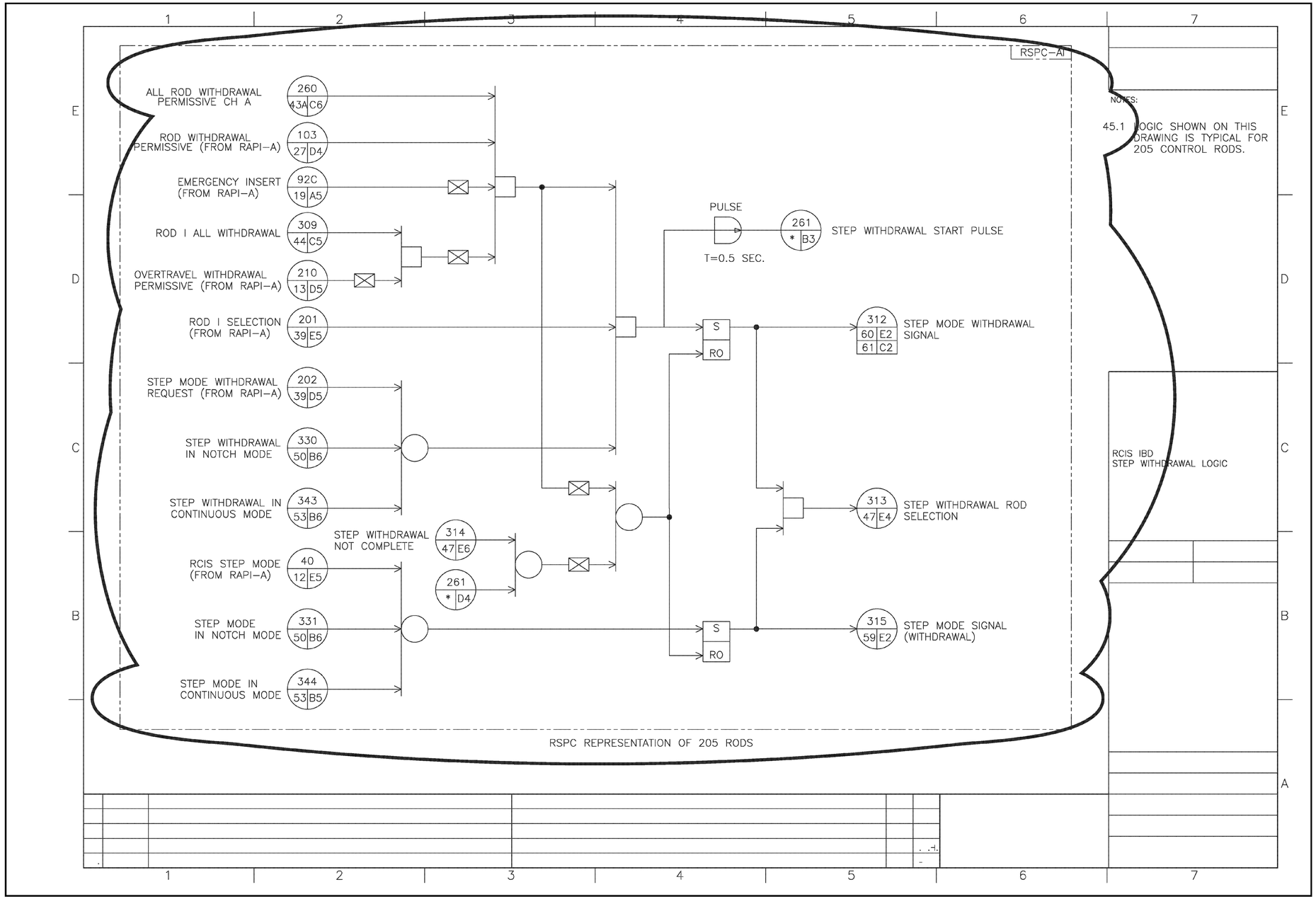

FIGURE 7.7-3 ROD CONTROL AND INFORMATION SYSTEM IBD (Sheet 45 of 114)

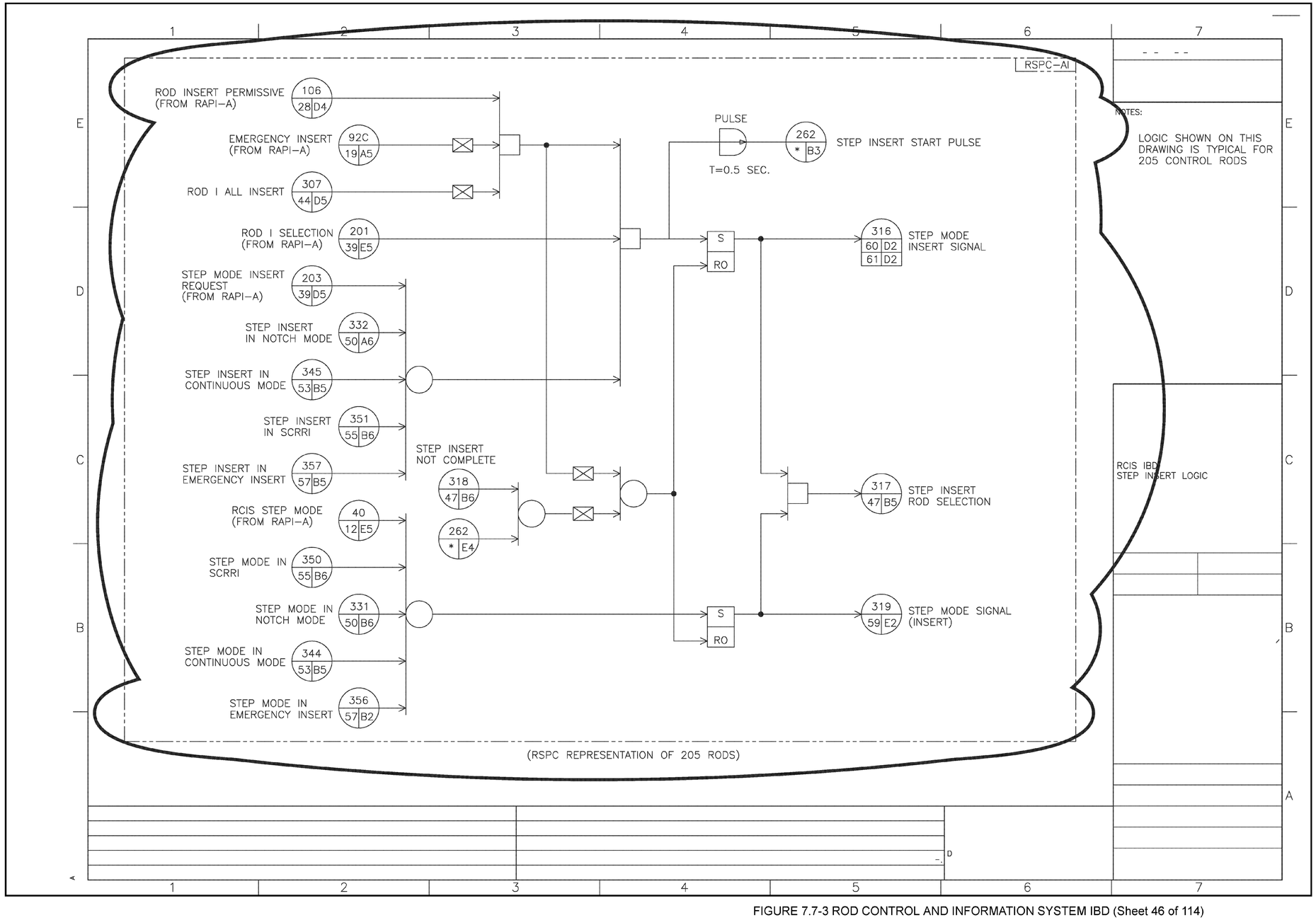

FIGURE 7.7-3 ROD CONTROL AND INFORMATION SYSTEM IBD (Sheet 46 of 114)

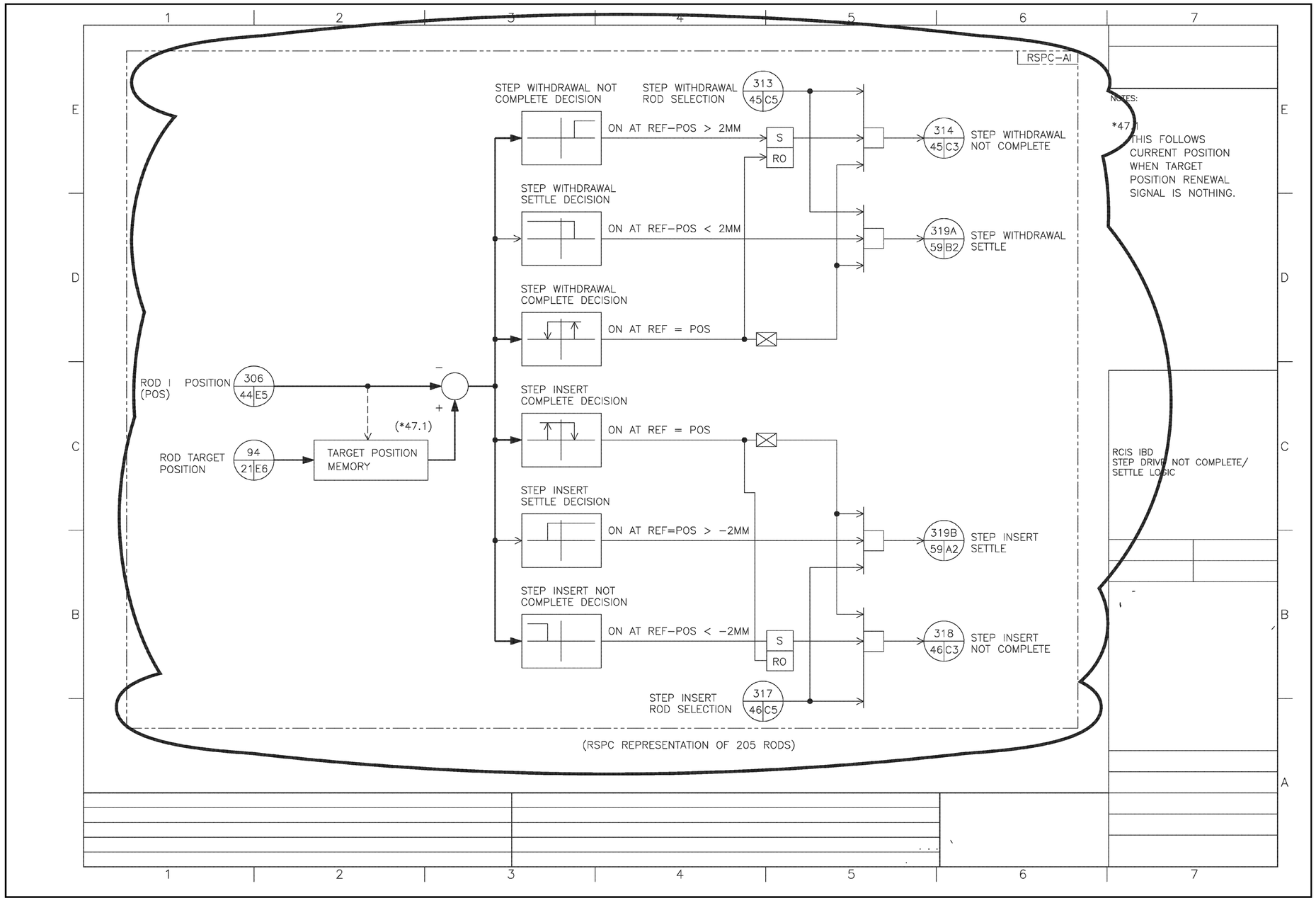

FIGURE 7.7-3 ROD CONTROL AND INFORMATION SYSTEM IBD (Sheet 47 of 114)

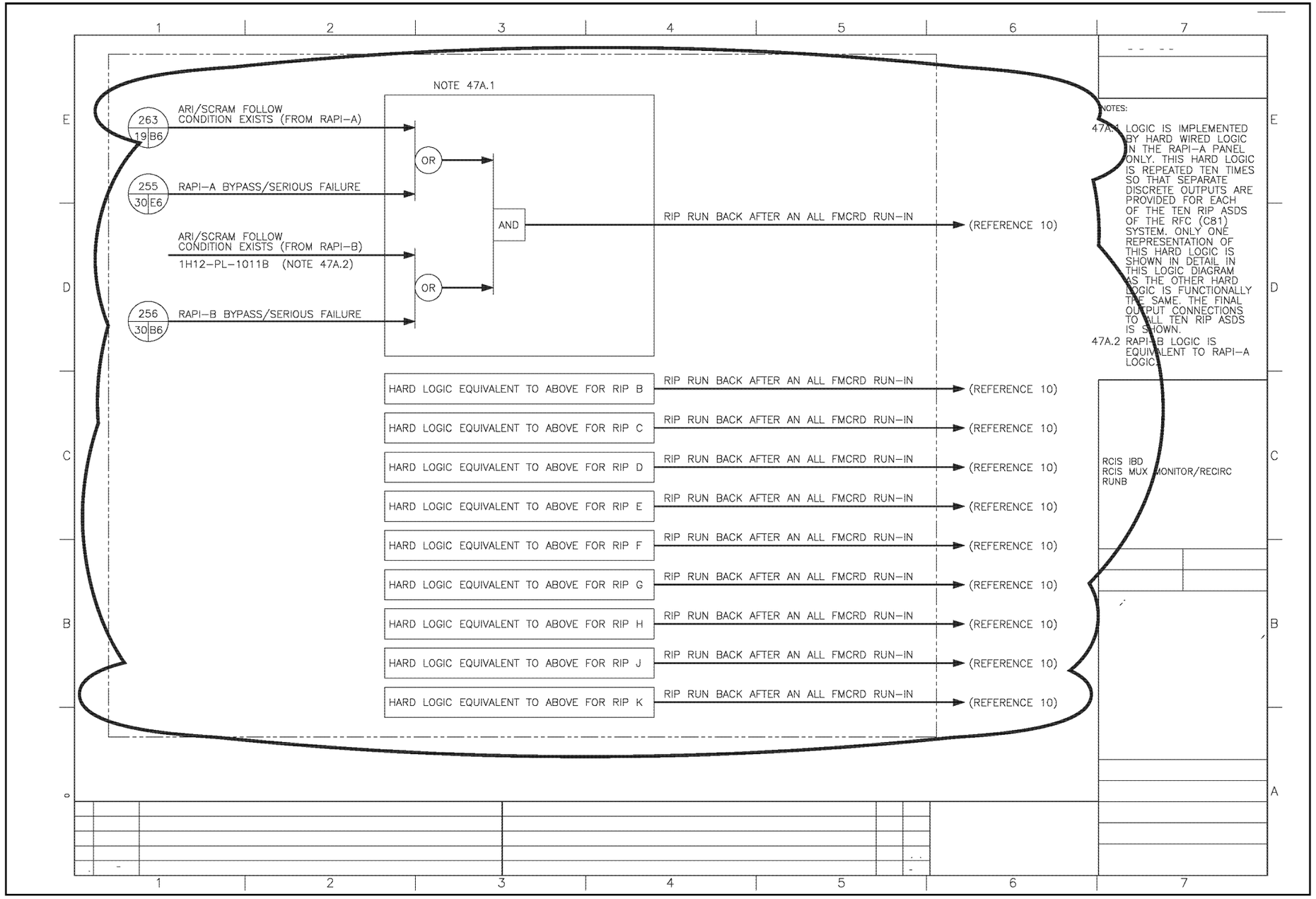

FIGURE 7.7-3 ROD CONTROL AND INFORMATION SYSTEM IBD (Sheet 47a of 114)

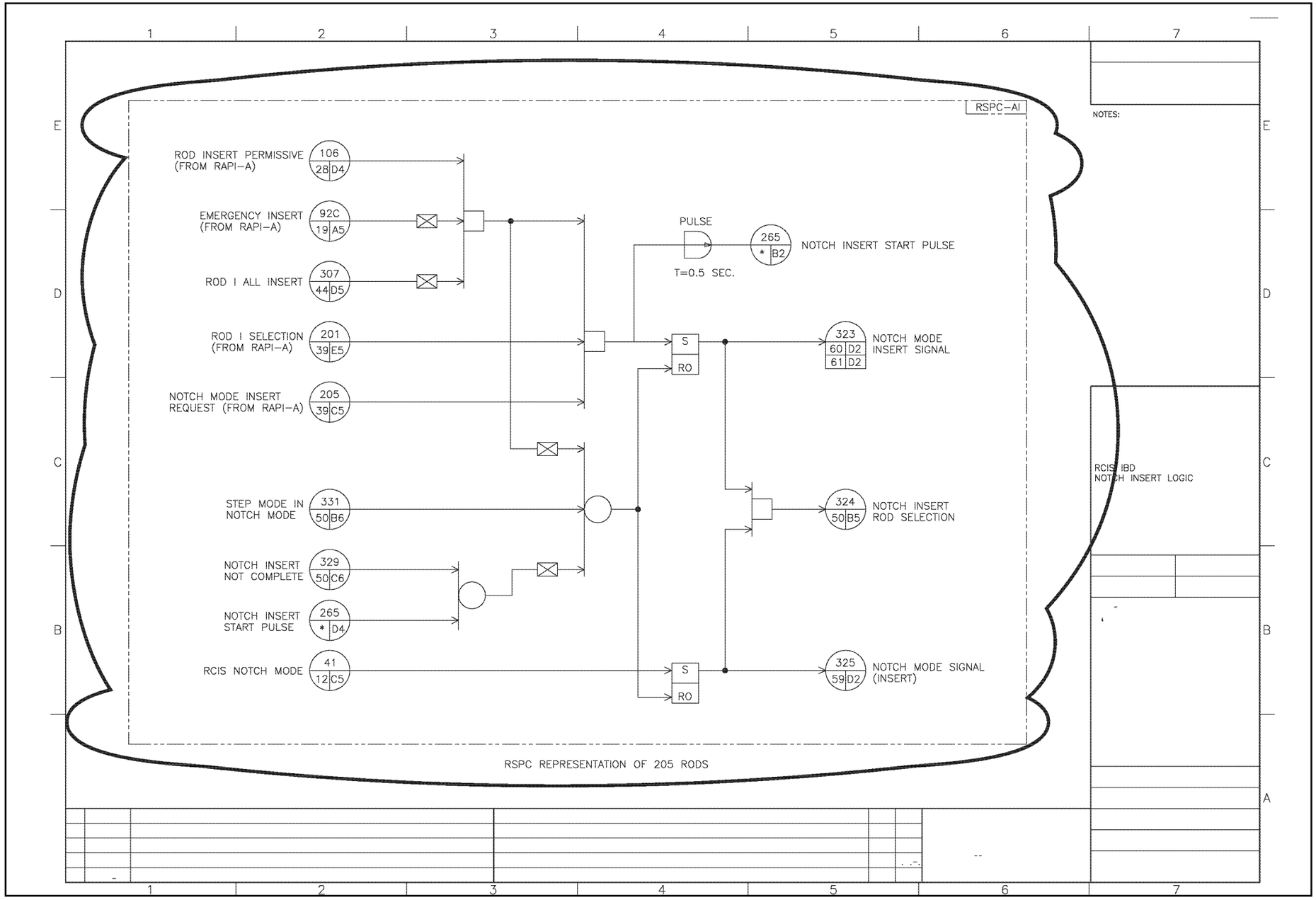

FIGURE 7.7-3 ROD CONTROL AND INFORMATION SYSTEM IBD (Sheet 49 of 114)

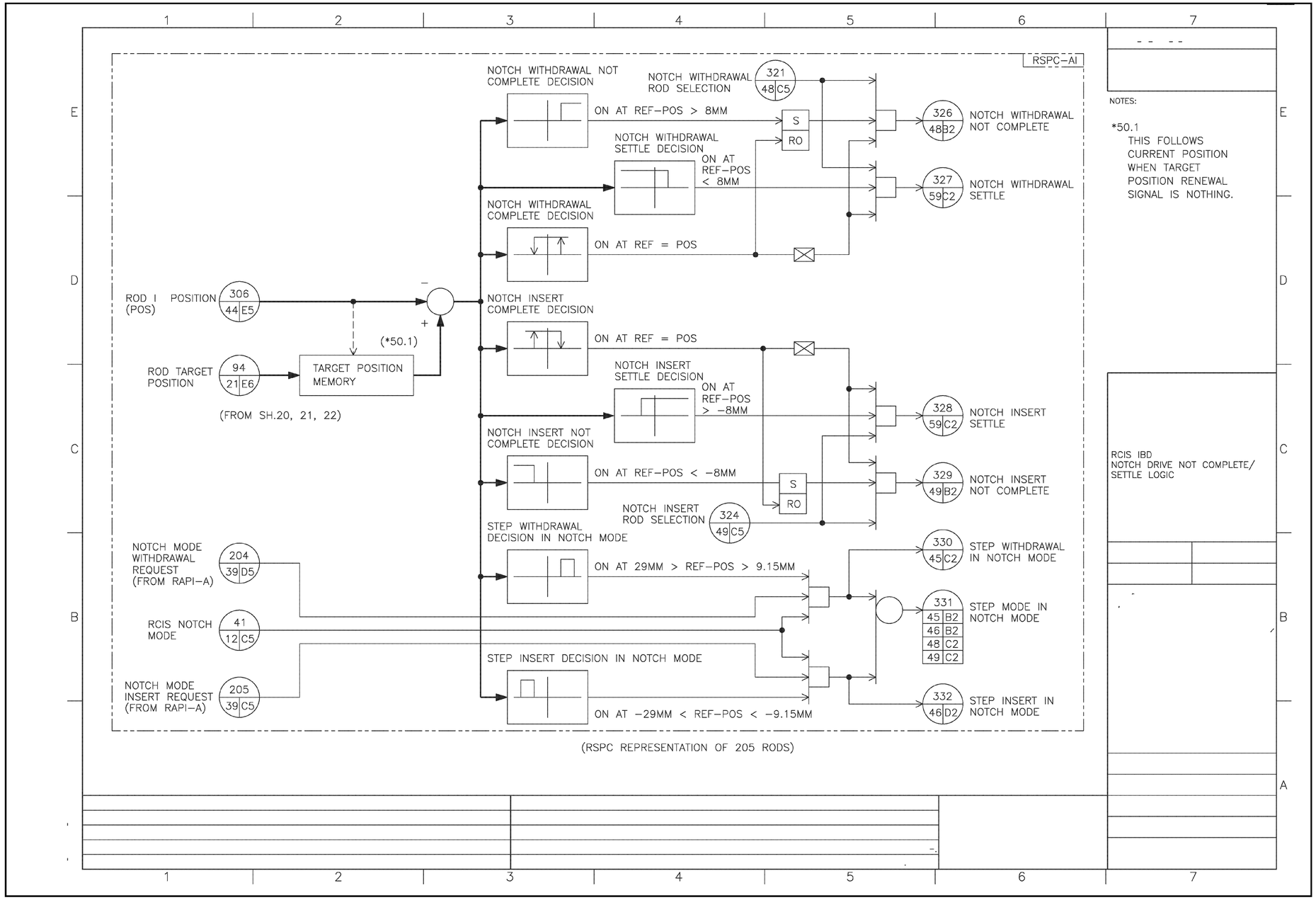

FIGURE 7.7-3 ROD CONTROL AND INFORMATION SYSTEM IBD (Sheet 50 of 114)

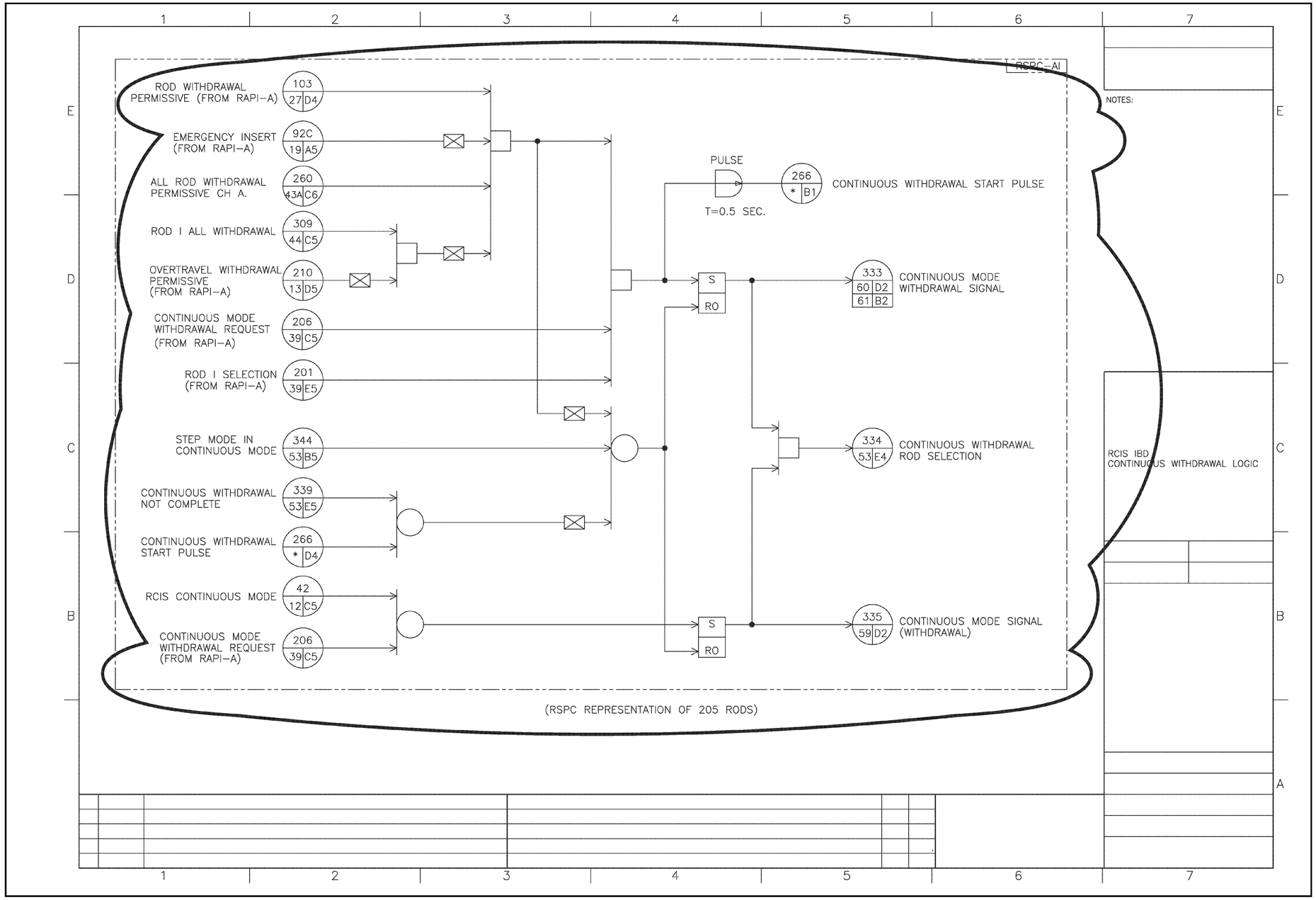

FIGURE 7.7-3 ROD CONTROL AND INFORMATION SYSTEM IBD (Sheet 51 of 114)

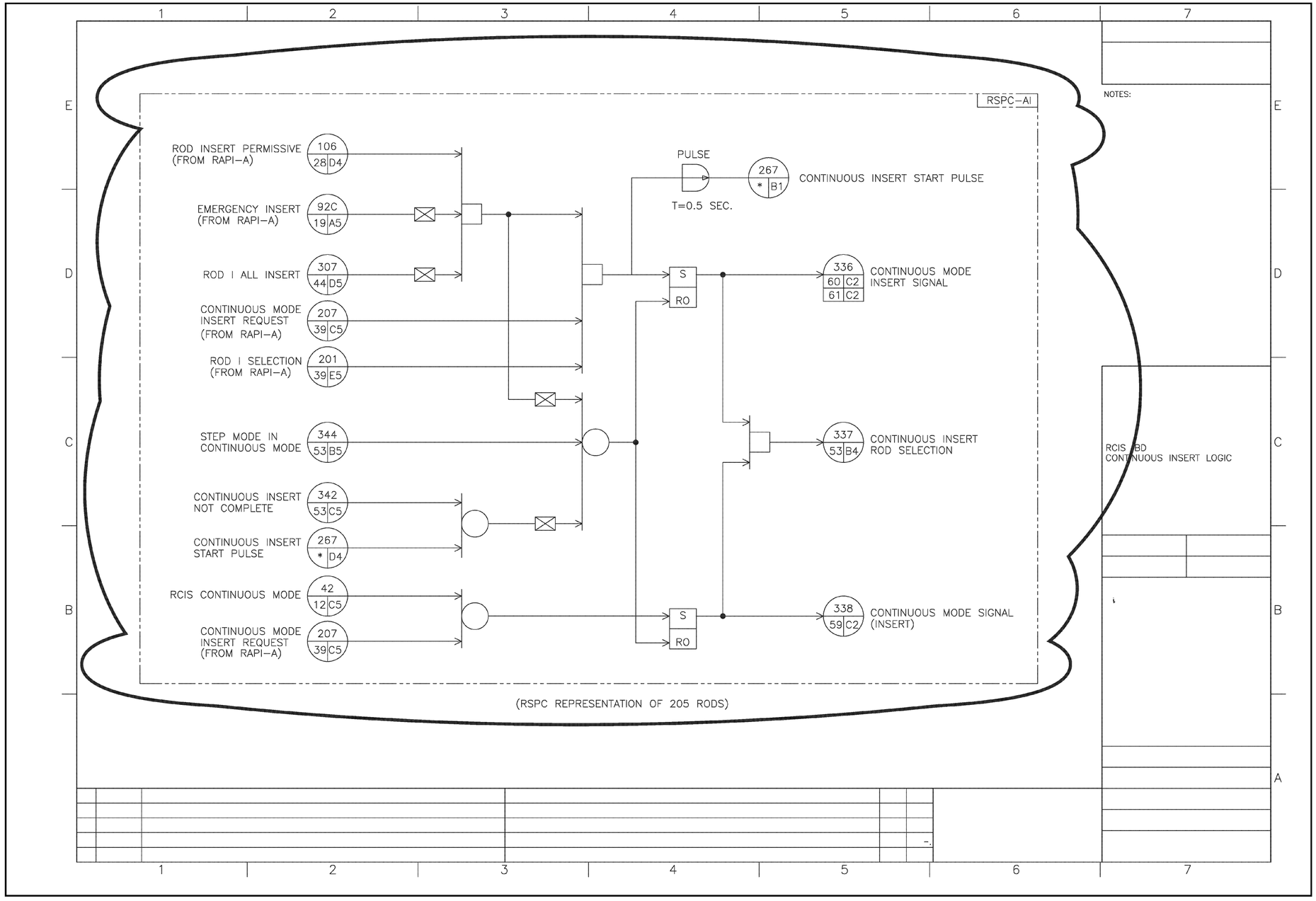

FIGURE 7.7-3 ROD CONTROL AND INFORMATION SYSTEM IBD (Sheet 52 of 114)

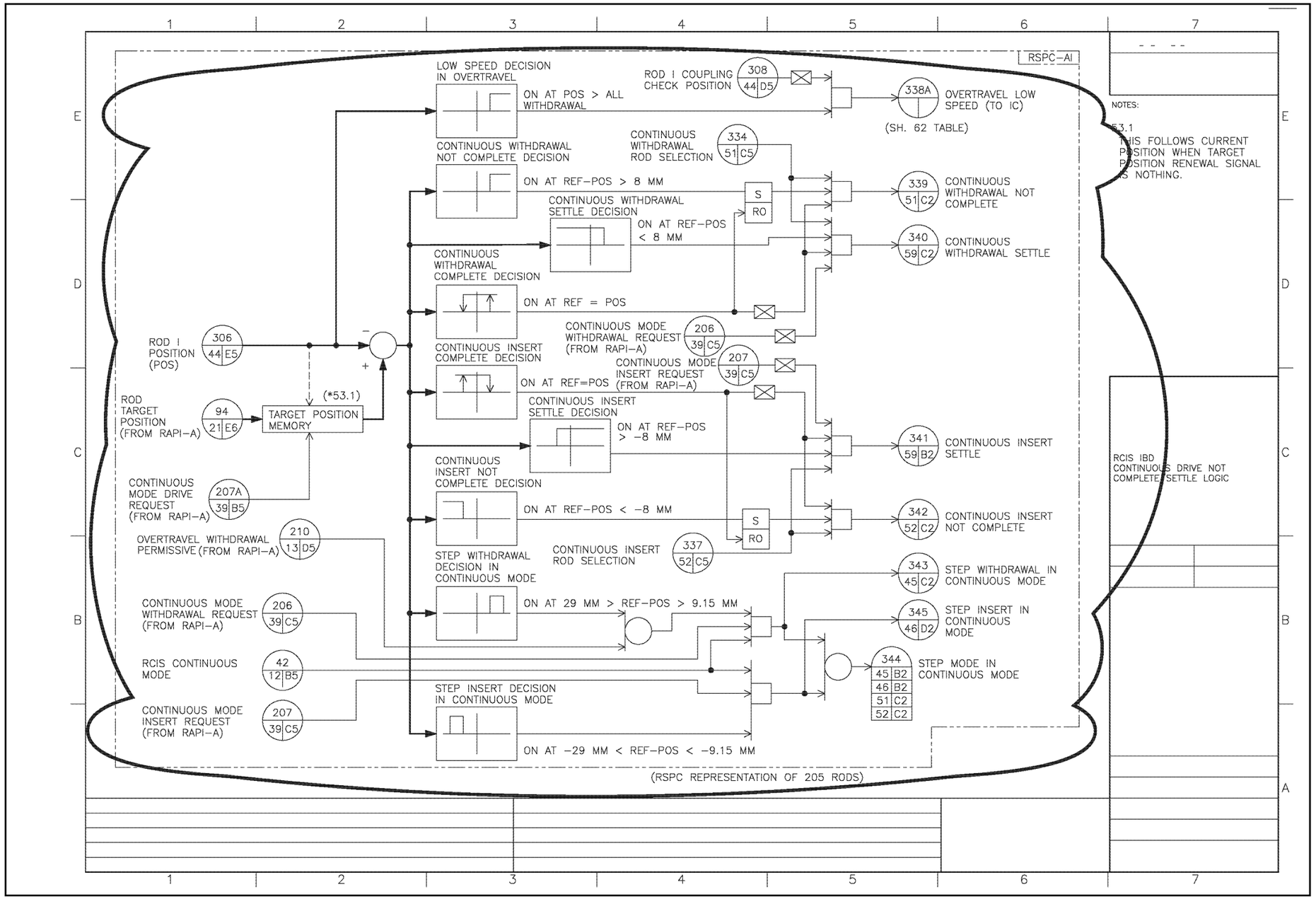

FIGURE 7.7-3 ROD CONTROL AND INFORMATION SYSTEM IBD (Sheet 53 of 114)

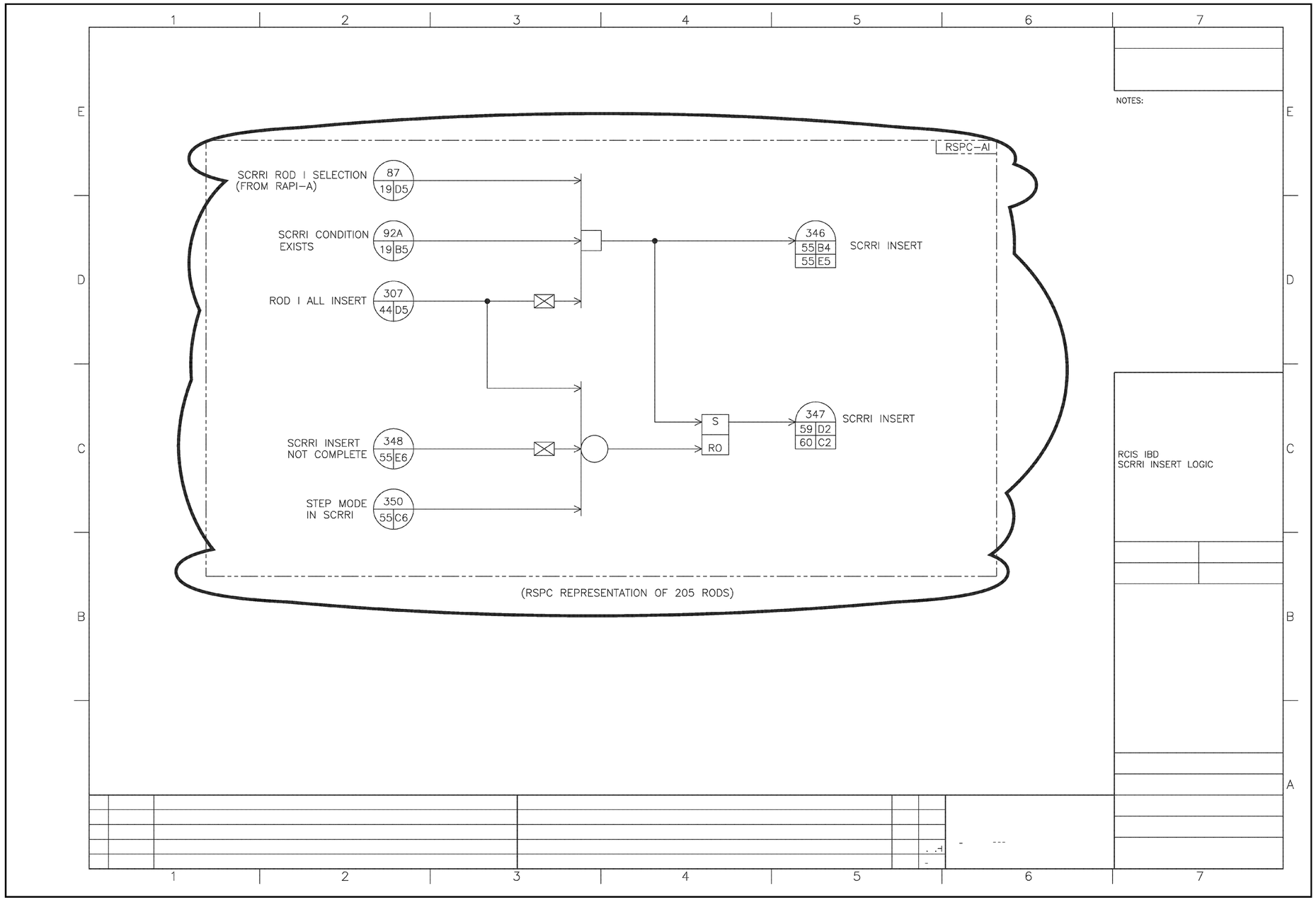

FIGURE 7.7-3 ROD CONTROL AND INFORMATION SYSTEM IBD (Sheet 54 of 114)

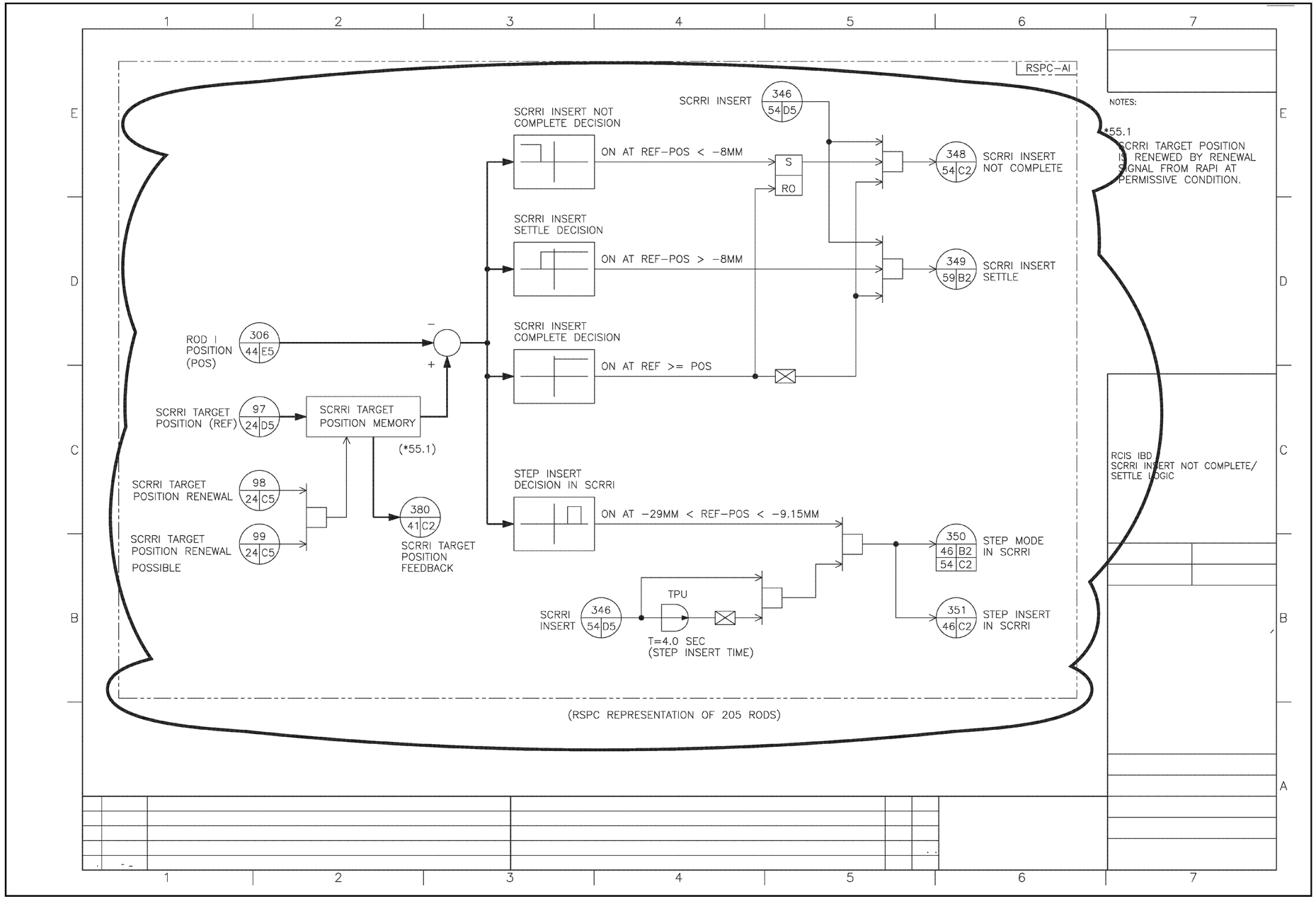

FIGURE 7.7-3 ROD CONTROL AND INFORMATION SYSTEM IBD (Sheet 55 of 114)

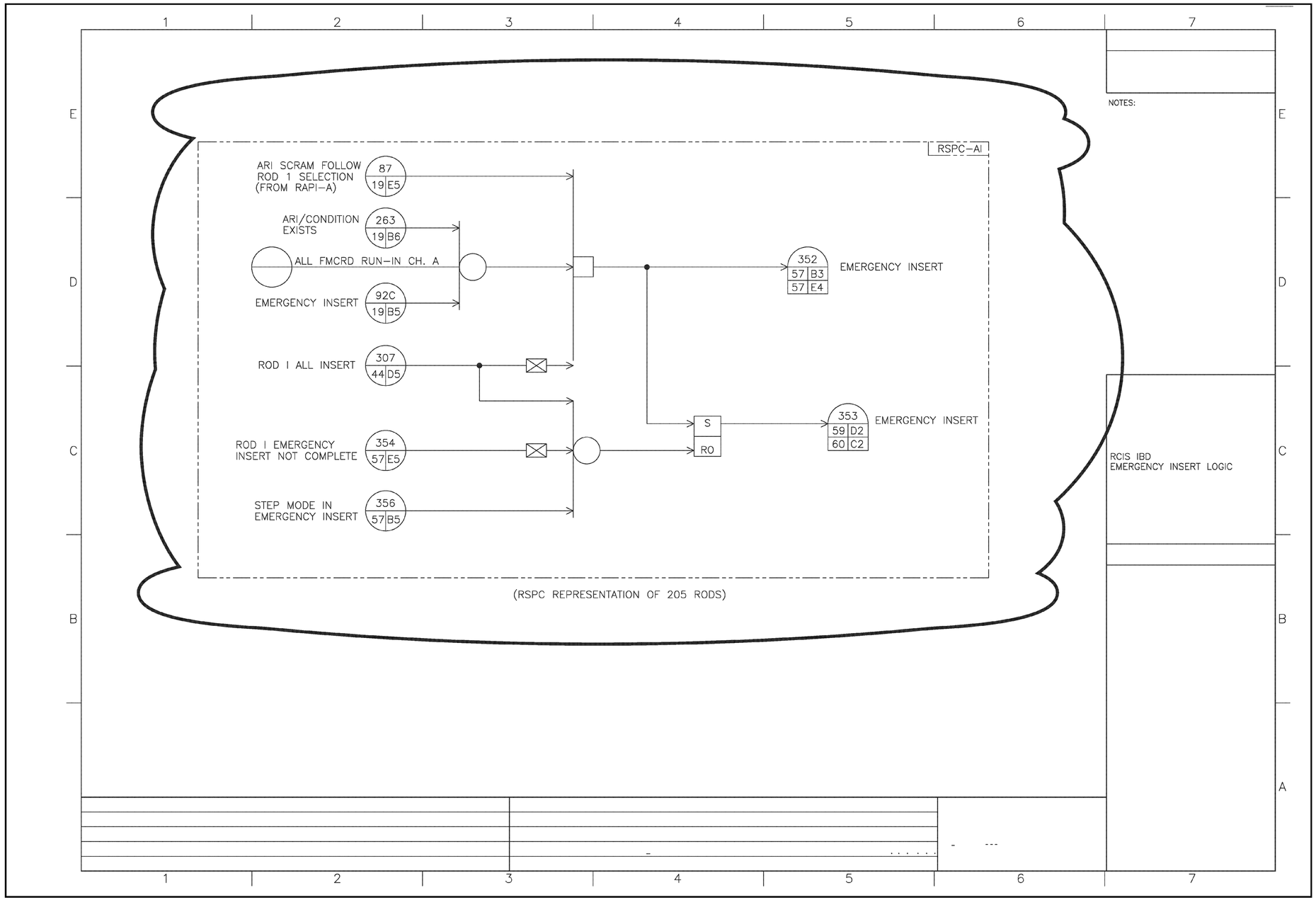

FIGURE 7.7-3 ROD CONTROL AND INFORMATION SYSTEM IBD (Sheet 56 of 114)

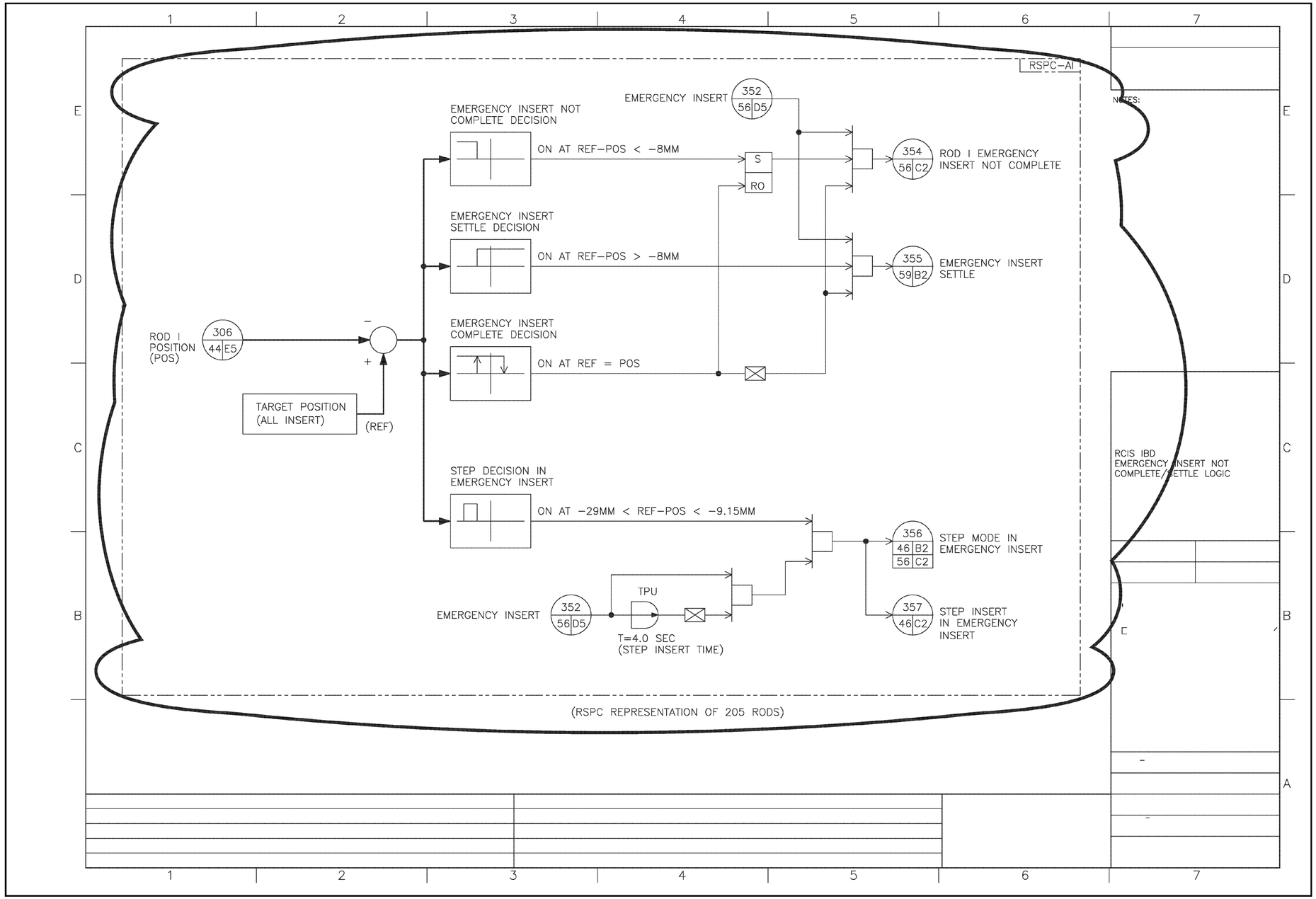

FIGURE 7.7-3 ROD CONTROL AND INFORMATION SYSTEM IBD (Sheet 57 of 114)

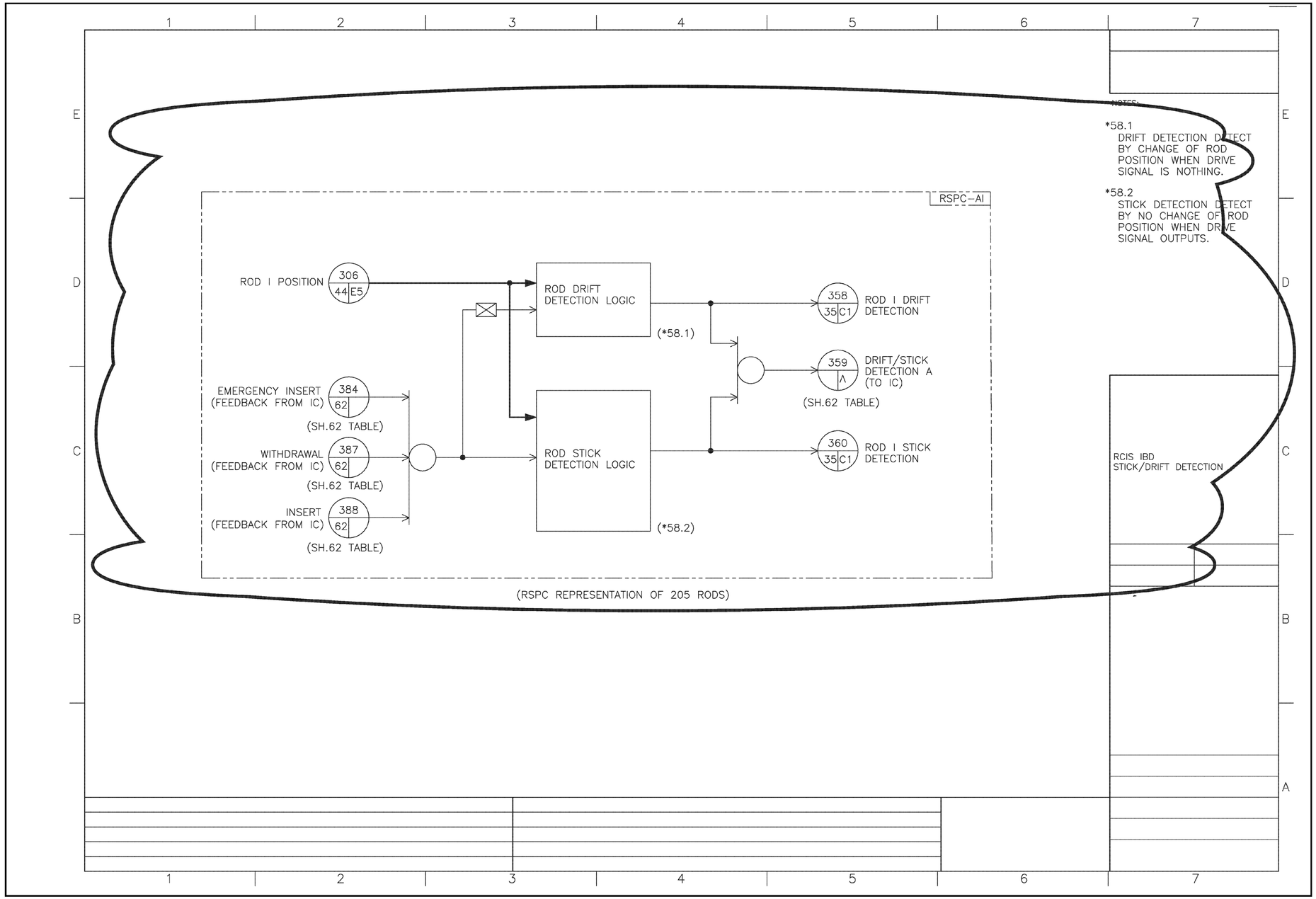

FIGURE 7.7-3 ROD CONTROL AND INFORMATION SYSTEM IBD (Sheet 58 of 114)

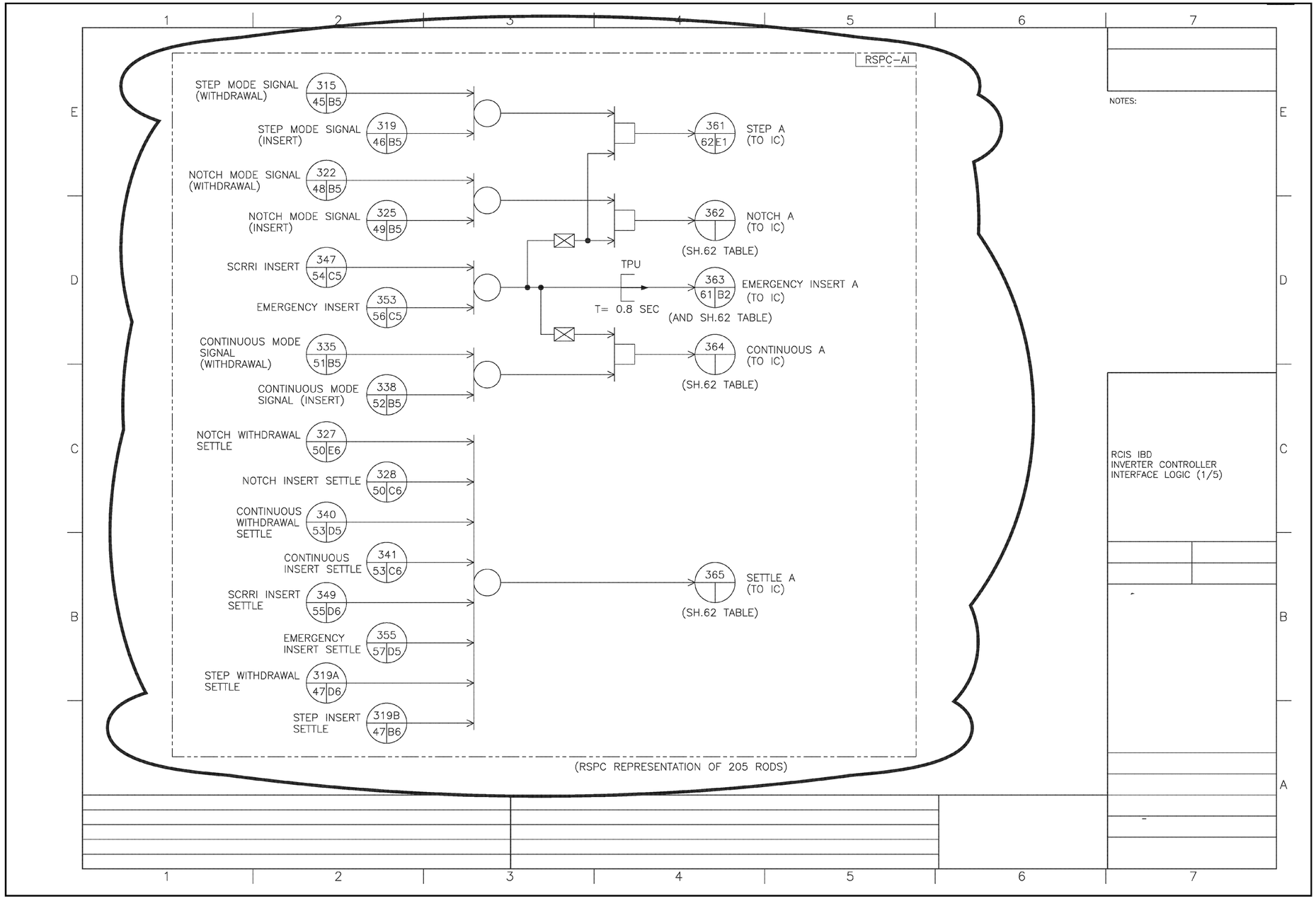

FIGURE 7.7-3 ROD CONTROL AND INFORMATION SYSTEM IBD (Sheet 59 of 114)

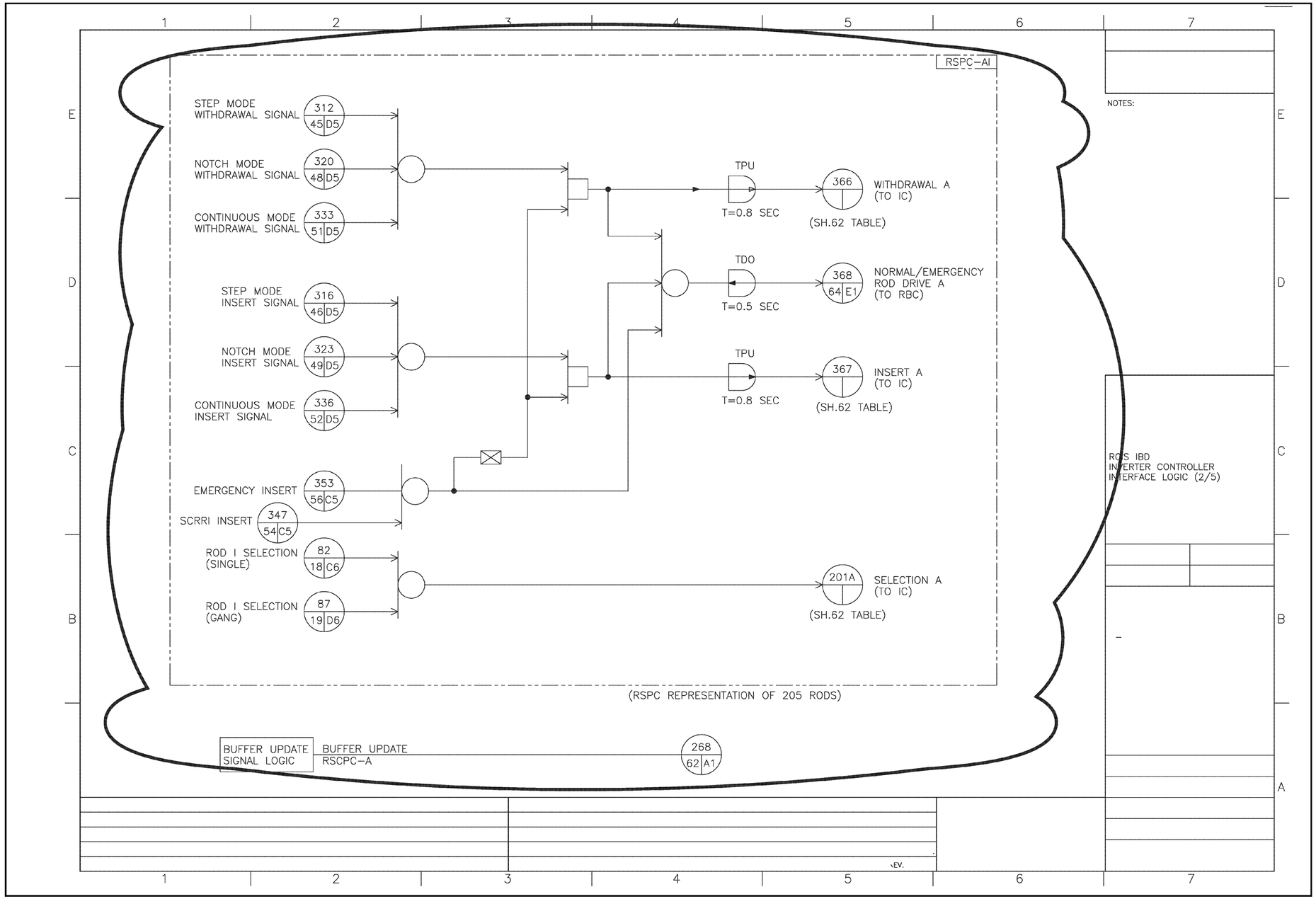

FIGURE 7.7-3 ROD CONTROL AND INFORMATION SYSTEM IBD (Sheet 60 of 114)

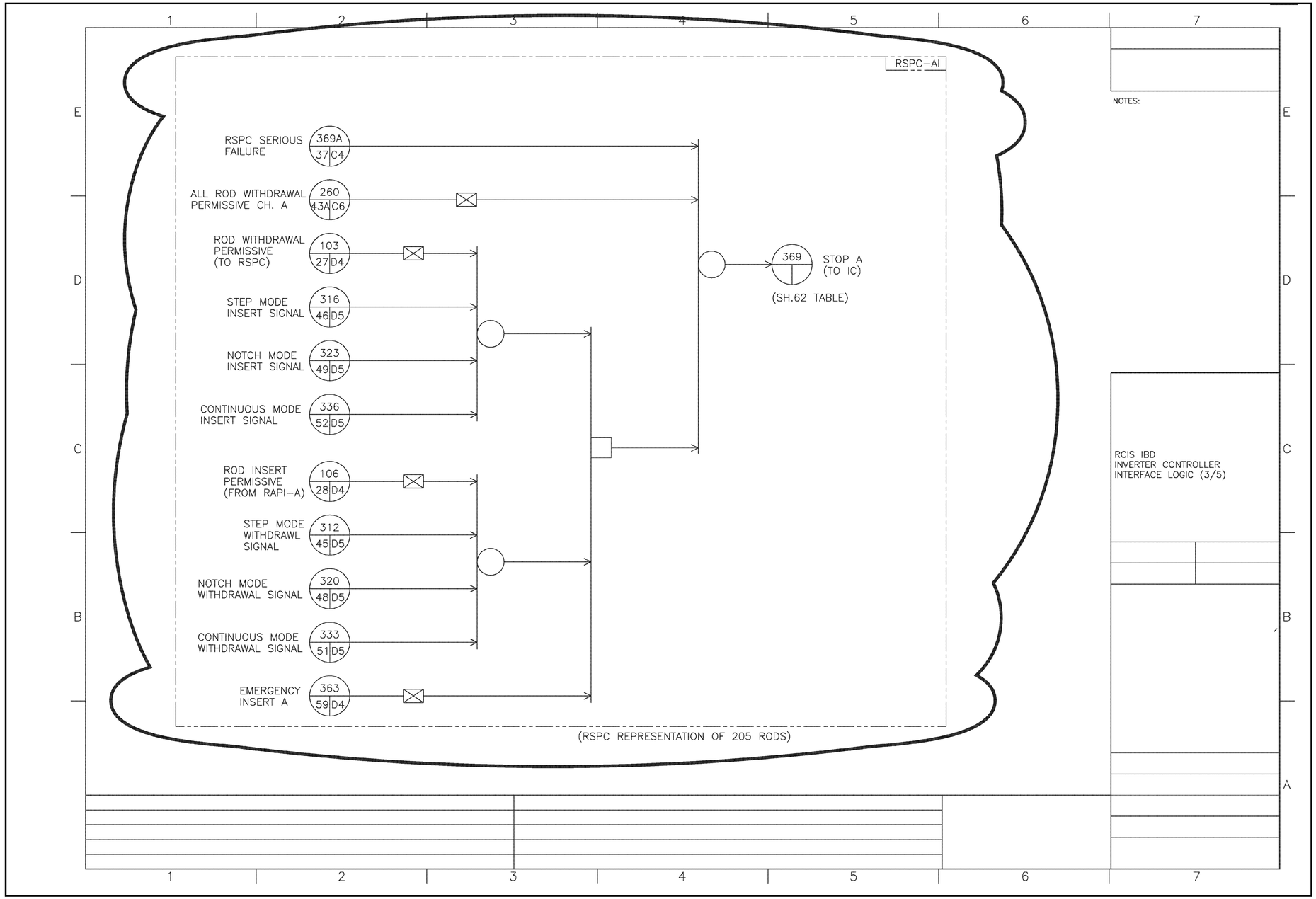

FIGURE 7.7-3 ROD CONTROL AND INFORMATION SYSTEM IBD (Sheet 61 of 114)

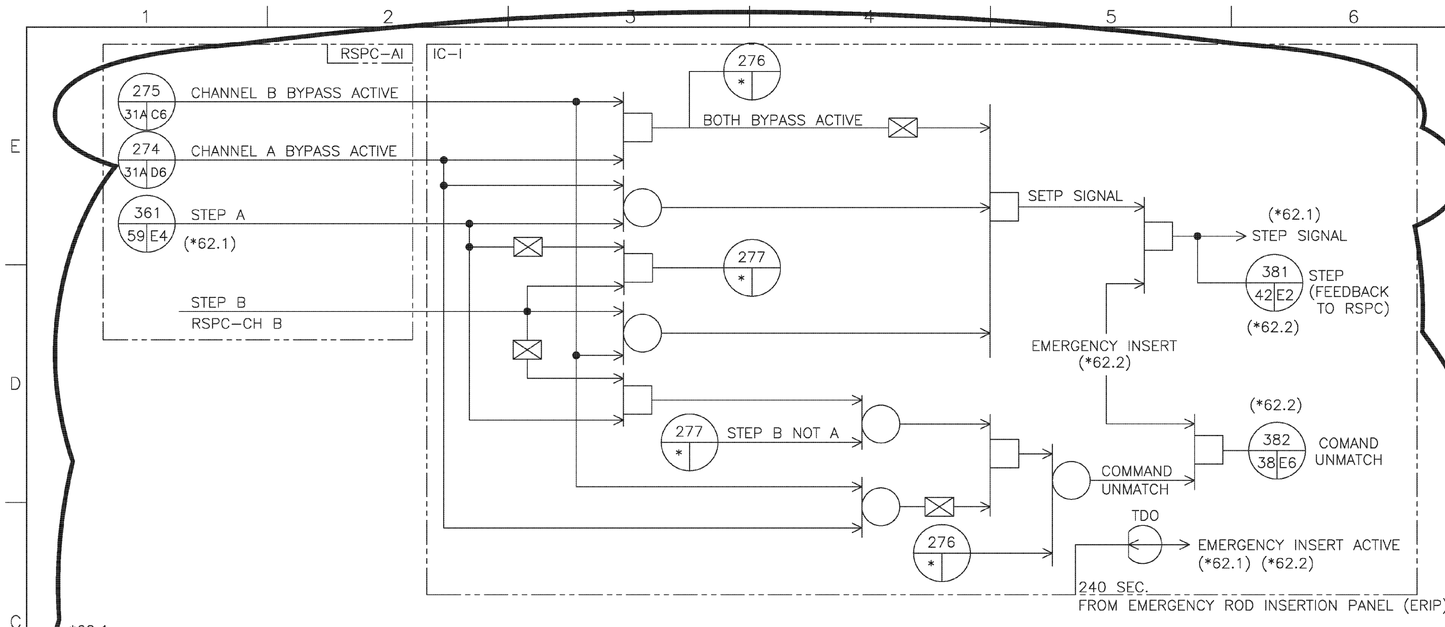

NOTES:

*62.4
THE RCIS LOGIC SHALL ALSO INCLUDE LOGIC THAT RESULTS IN THE RSPC-BI BYPASS SIGNALS BEING ACTIVATED IF THE CORRESPONDING FCM-BI BYPASS SIGNAL IS ACTIVE (SEE SHEET 32 FOR FCM-BI BYPASS LOGIC).
ALSO EQUIVALENT LOGIC SHALL EXIST FOR RSPC-AI BYPASS LOGIC BASED UPON BYPASS STATUS.

*62.1
THE FOLLOWING SIGNALS ARE THE SAME INTERFACE, EXCEPT FOR THE EMERGENCY INSERT CONDITION WHICH ALSO REQUIRES THE ASSOCIATED INPUT FROM THE ERIP TO BE ACTIVATED FOR EMERGENCY INSERTION TO BE PERFORMED BY THE IC LOGIC RSPC REQUESTS SIGNALS ARE INVALIDITY AND COMPULSORY SHUTDOWN IN TWO CHANNEL COMMAND UNMATCH.
IC SLIGHT FAILURE DISPLAY IS LIGHTED EACH MODULE INDIVIDUAL ALARM IN THIS CONDITIONS.

*62.2
THE FOLLOWING SIGNALS ARE THE SAME INTERFACE, EXCEPT FOR THE EMERGENCY INSERT CONDITION WHICH ALSO REQUIRES THE ASSOCIATED INPUT FROM THE ERIP TO BE ACTIVATED FOR EMERGENCY INSERTION TO BE PERFORMED BY THE IC LOGIC (AND PROVIDE FEEDBACK THE ASSOCIATED "AND" GATE SHOWN FOR TO THE RSPC). THIS CASE IS NOT NEEDED FOR ALL OTHER CASES.

*62.3
INVERTER CONTROLLER RECEIVES TWO CHANNEL DRIFT/STICK DETECTION (FROM THE ASSOCIATED RSPCS). NO FEEDBACK OF THIS SIGNAL TO THE RSPCS IS NEEDED. POWER OF SMDM IS CUT OFF WHEN BOTH ASSOCIATED RSPC CHANNELS DETECT "DRIFT/STICK" CONDITION.

RCIS IBD
INVERTER CONTROLLER
INTERFACE LOGIC (4/5)

NO.	MATCHING SIGNAL	MATCHING SH.	SIGNAL NAME	NOTES
1	362	59	NOTCH A	
2	363	59	EMERGENCY INSERT A	
3	364	59	CONTINUOUS A	
4	365	59	SETTLE A	
5	366	60	WITHDRAWAL A	
6	367	60	INSERT A	
7	369	61	STOP A	
8	201A	60	SELECTION A	
9	359	58	DRIFT/STICK DETECTION A	*62.3
10	338A	53	OVERTRAVEL LOW SPEED A	
11	390	82	EMERGENCY INSERT ACTIVE	
12	268	60	BUFFER UPDATE	

NO.	SIGNAL NAME	MATCHING SIGNAL	MATCHING SH.	NOTES
1	NOTCH	383	42	
2	EMERGENCY INSERT	384	42,58	
3	CONTINUOUS	385	42	
4	SETTLE	386	42	
5	WITHDRAWAL	387	42,58	
6	INSERT	388	42,58	
7	STOPPED	389	42	
8	(DELETED)			
9	DRIFT/STICK DETECTION	N/A		*62.3
10	OVERTRAVEL LOW SPEED	392	42	
11	CHANNEL TIME OUT	270	42	
12	IC TROUBLE	273	42	
13	SMDM	272	42	

FIGURE 7.7-3 ROD CONTROL AND INFORMATION SYSTEM IBD (Sheet 62 of 114)

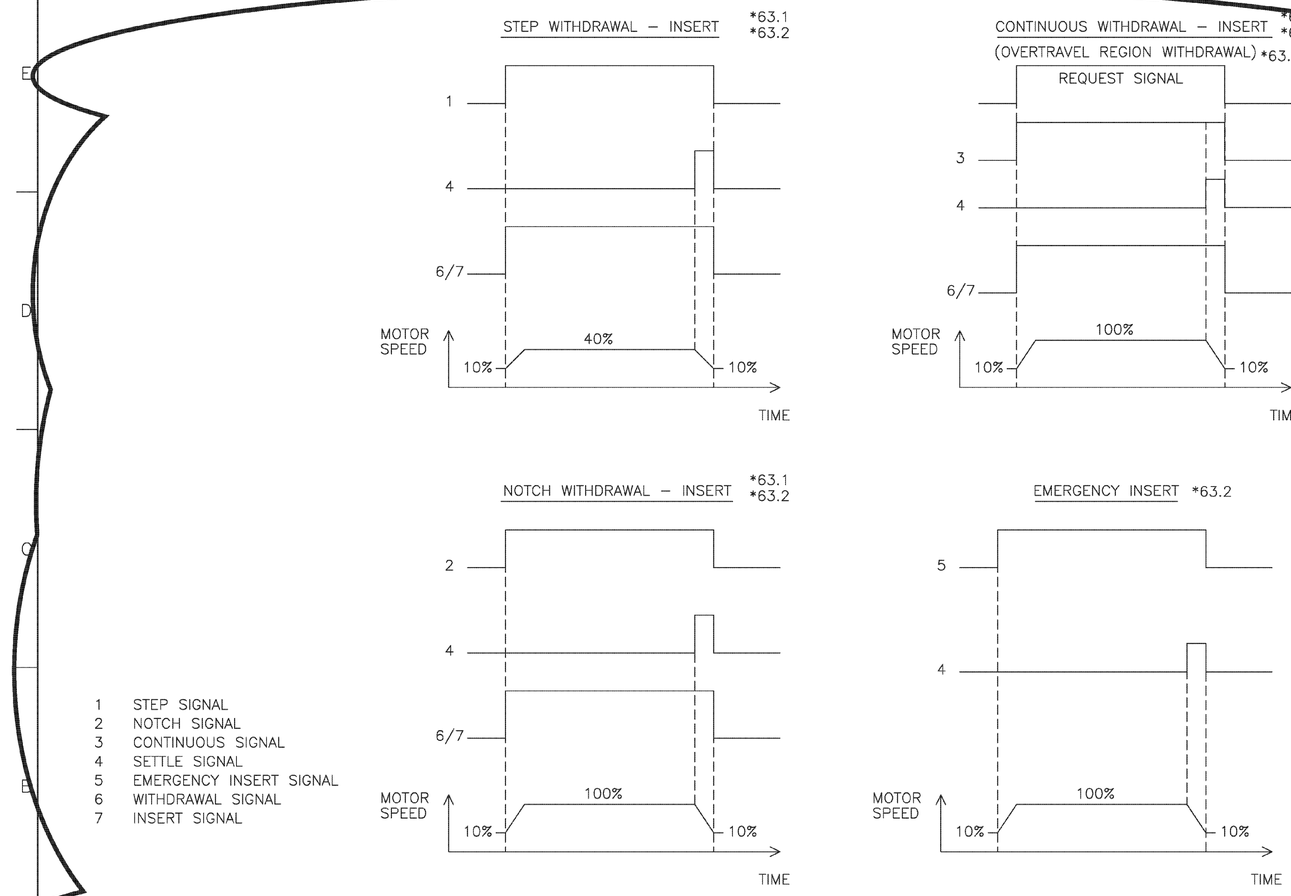

1 STEP SIGNAL
2 NOTCH SIGNAL
3 CONTINUOUS SIGNAL
4 SETTLE SIGNAL
5 EMERGENCY INSERT SIGNAL
6 WITHDRAWAL SIGNAL
7 INSERT SIGNAL

NOTES:

*63.1 THE SETTLE SIGNAL IS ALSO ACTIVATED WITHIN 30 MM OF BEING FULL–IN FOR THE ASSOCIATED WITHDRAWAL MOVEMENTS.
*63.2 THE SETTLE SIGNAL IS ALSO ACTIVATED WITHIN 30 MM OF BEING FULL–OUT FOR THE ASSOCIATED INSERTION MOVEMENTS.
*63.3 FOR THE COUPLING TEST, CONTINUOUS WITHDRAWA
TRAVEL REGION IS LIMITED TO 40% MAXIMUM SPEED USING THE OVERTRAVEL LOW SPEED COMMAND SIGNALS TO

RCIS IBD
INVERTER CONTROLLER
INTERFACE LOGIC (5/5)

FIGURE 7.7-3 ROD CONTROL AND INFORMATION SYSTEM IBD (Sheet 63 of 114)

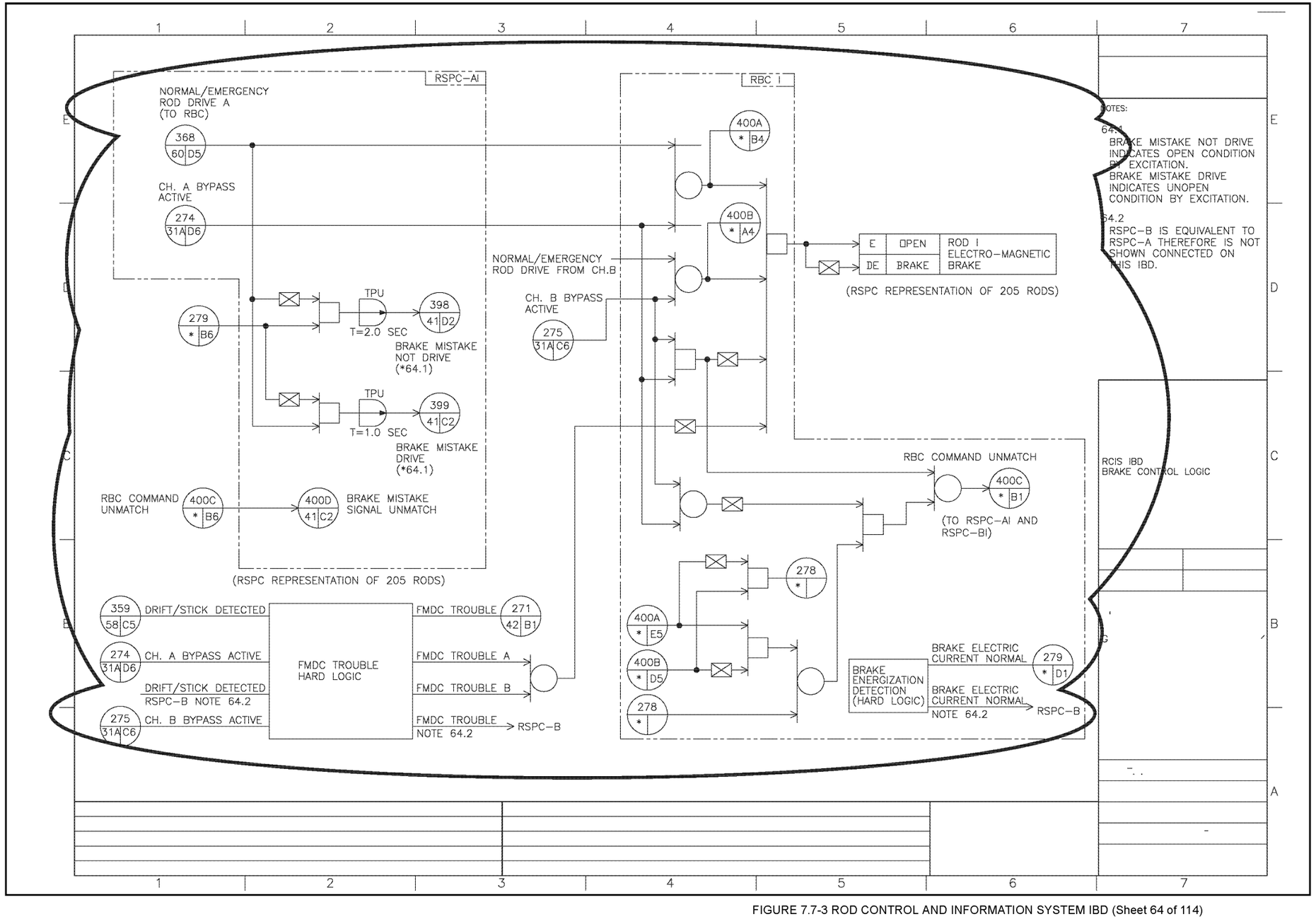

FIGURE 7.7-3 ROD CONTROL AND INFORMATION SYSTEM IBD (Sheet 64 of 114)

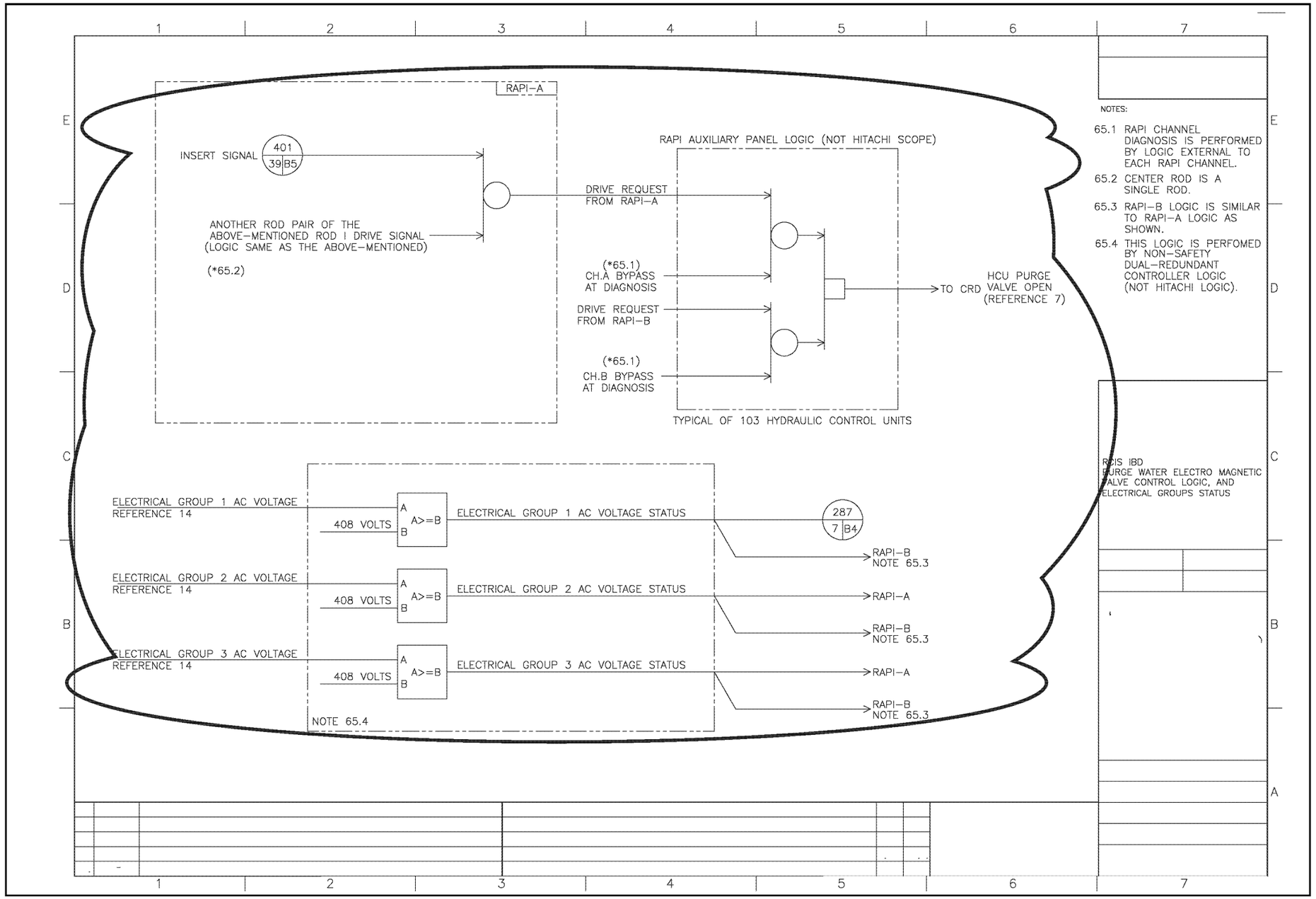

FIGURE 7.7-3 ROD CONTROL AND INFORMATION SYSTEM IBD (Sheet 65 of 114)

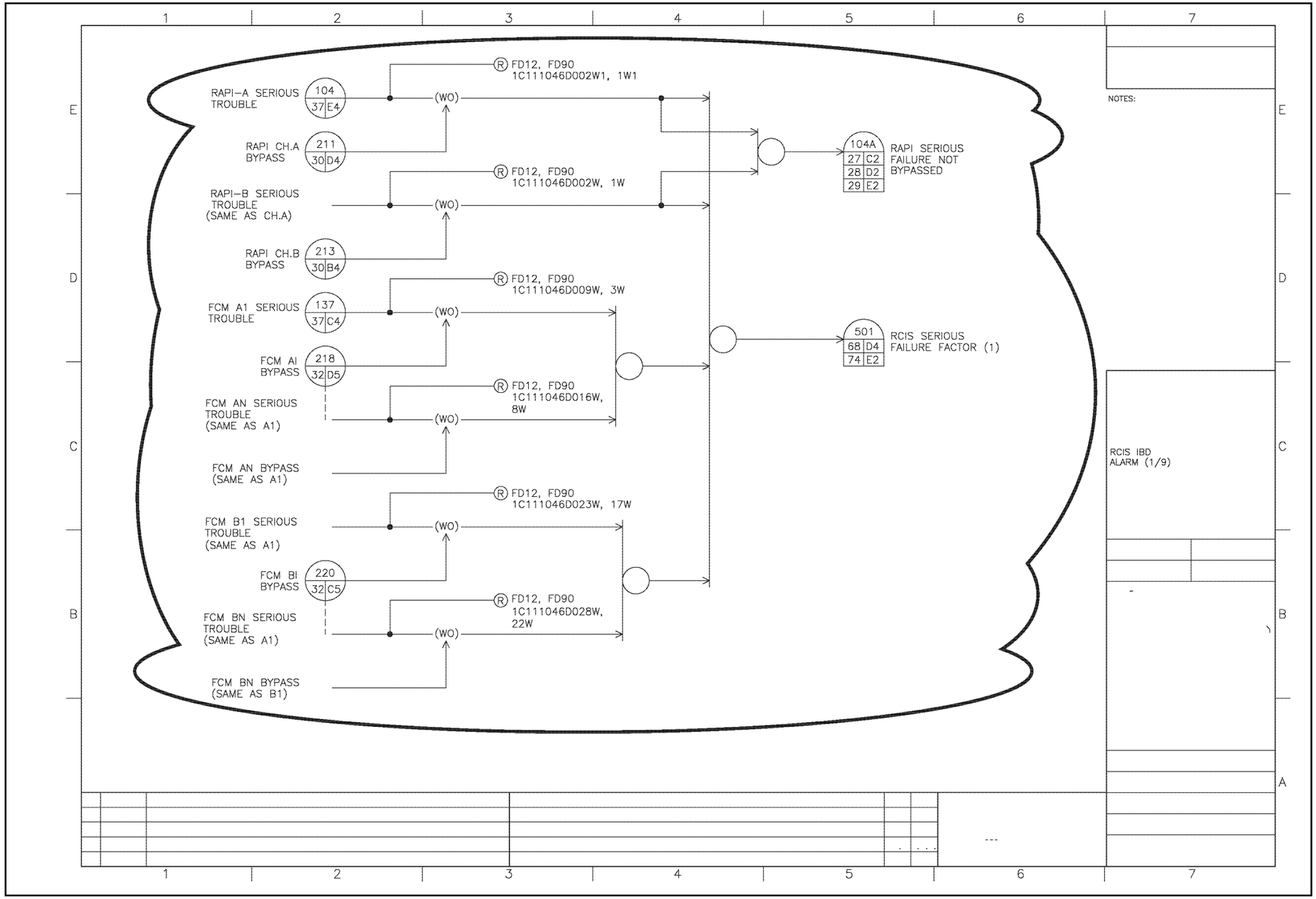

FIGURE 7.7-3 ROD CONTROL AND INFORMATION SYSTEM IBD (Sheet 66 of 114)

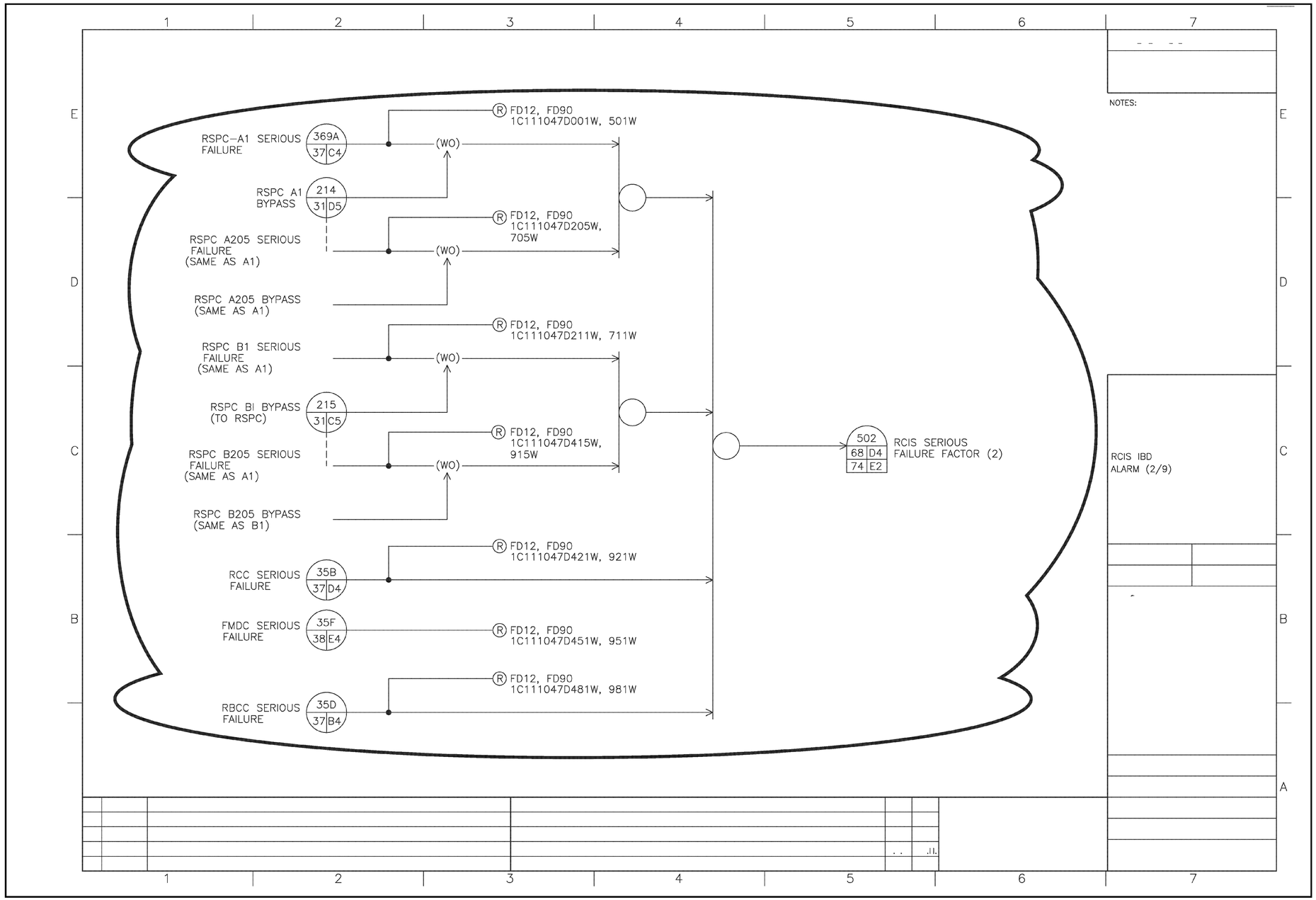

FIGURE 7.7-3 ROD CONTROL AND INFORMATION SYSTEM IBD (Sheet 67 of 114)

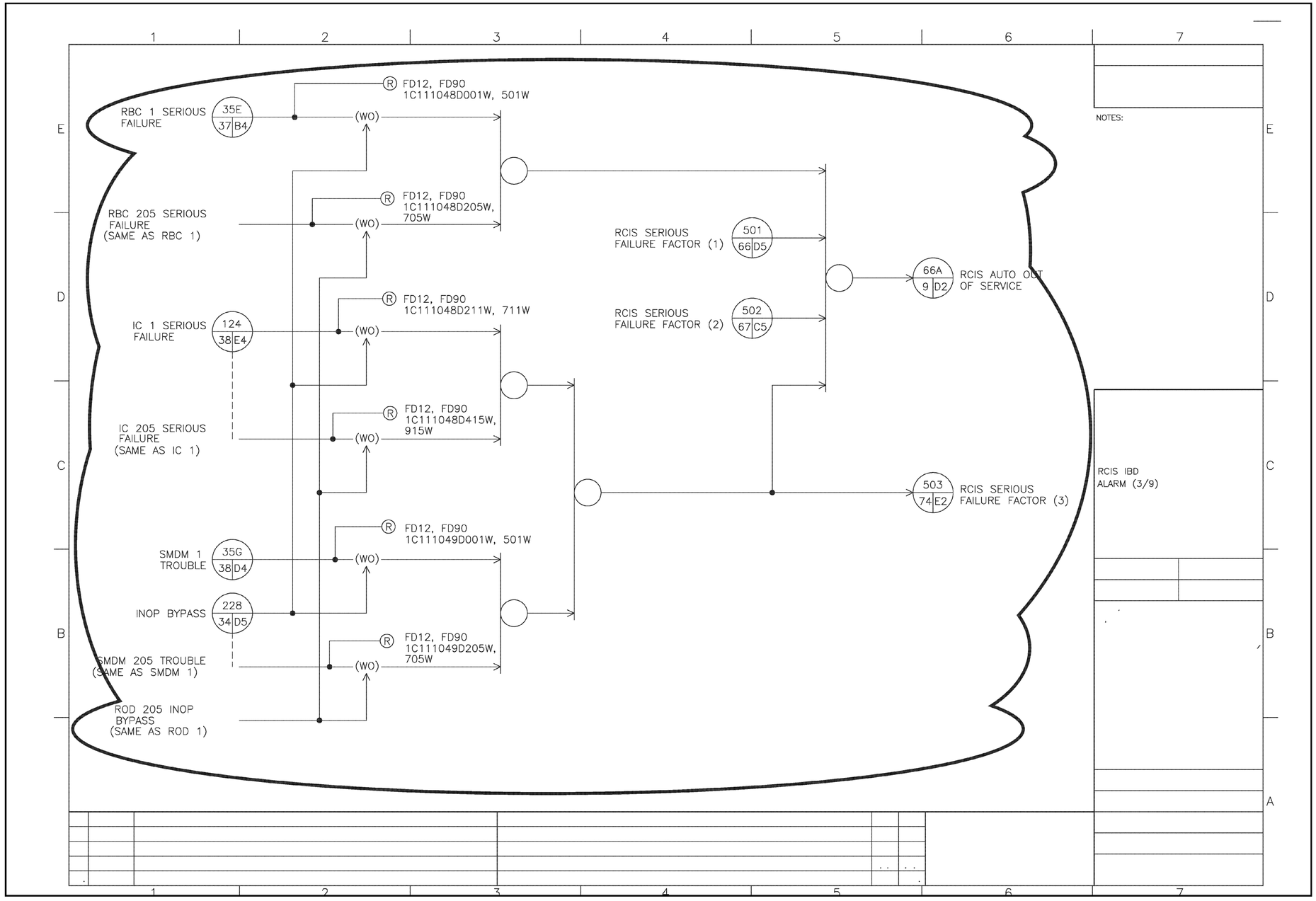

FIGURE 7.7-3 ROD CONTROL AND INFORMATION SYSTEM IBD (Sheet 68 of 114)

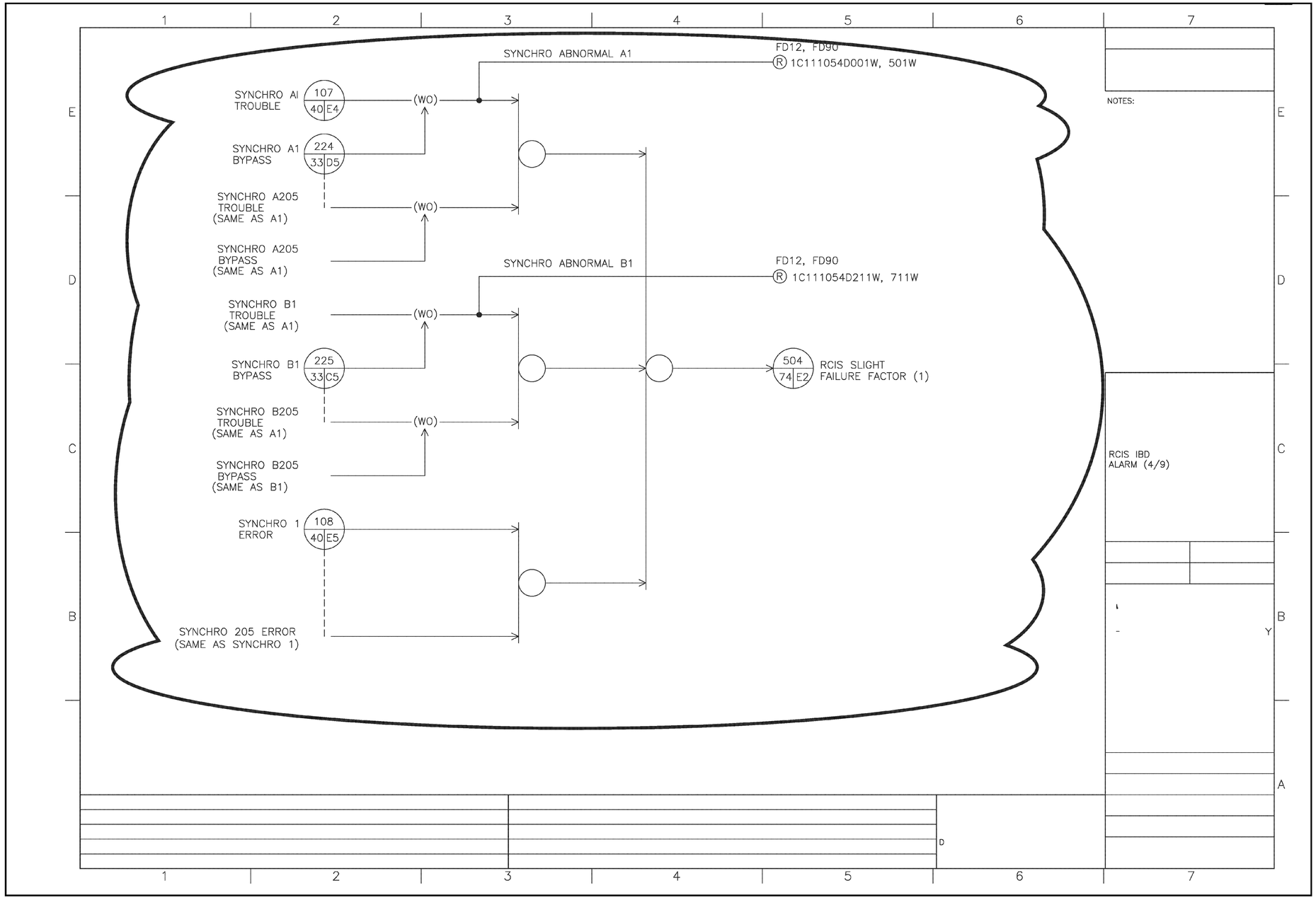

FIGURE 7.7-3 ROD CONTROL AND INFORMATION SYSTEM IBD (Sheet 69 of 114)

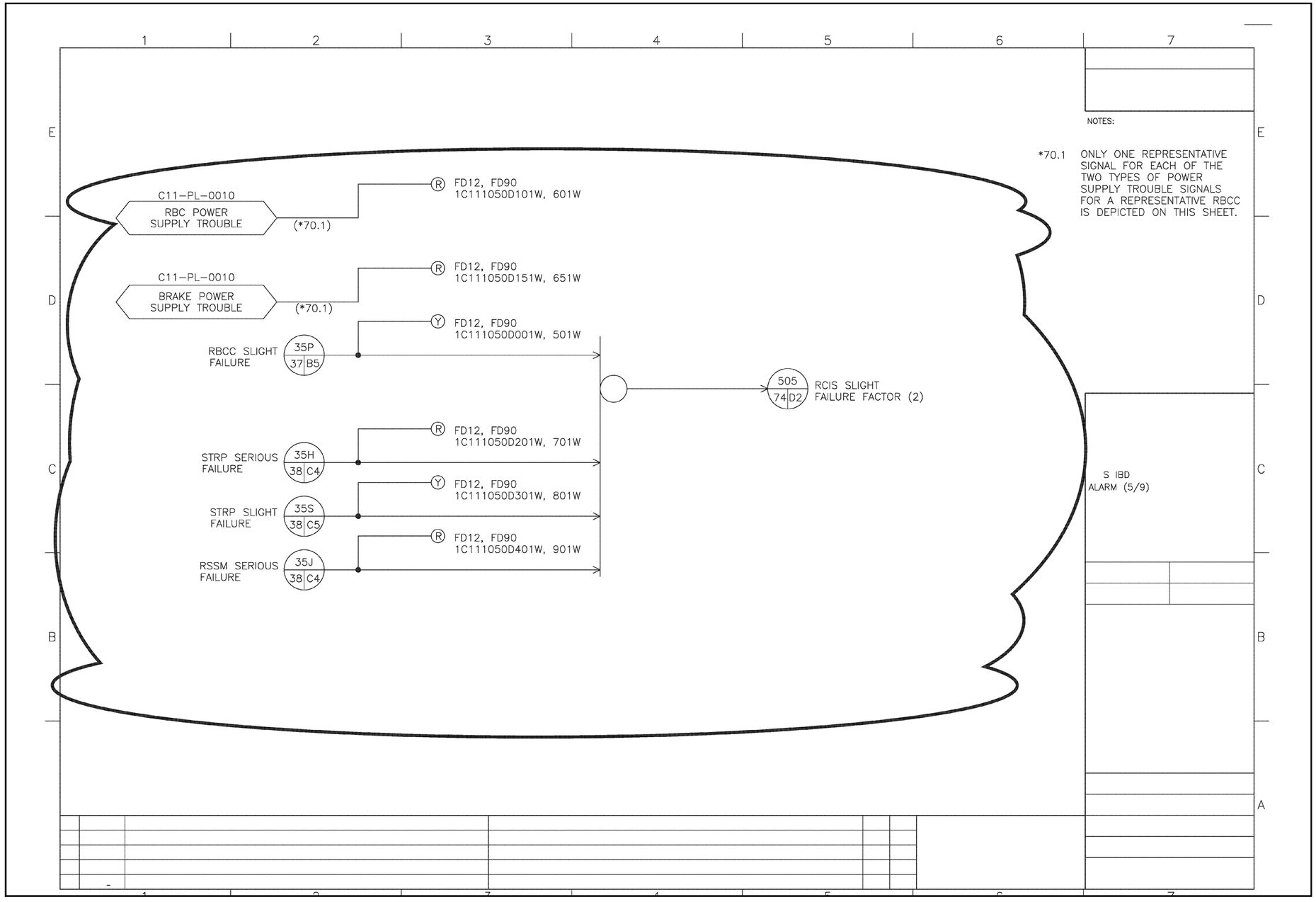

FIGURE 7.7-3 ROD CONTROL AND INFORMATION SYSTEM IBD (Sheet 70 of 114)

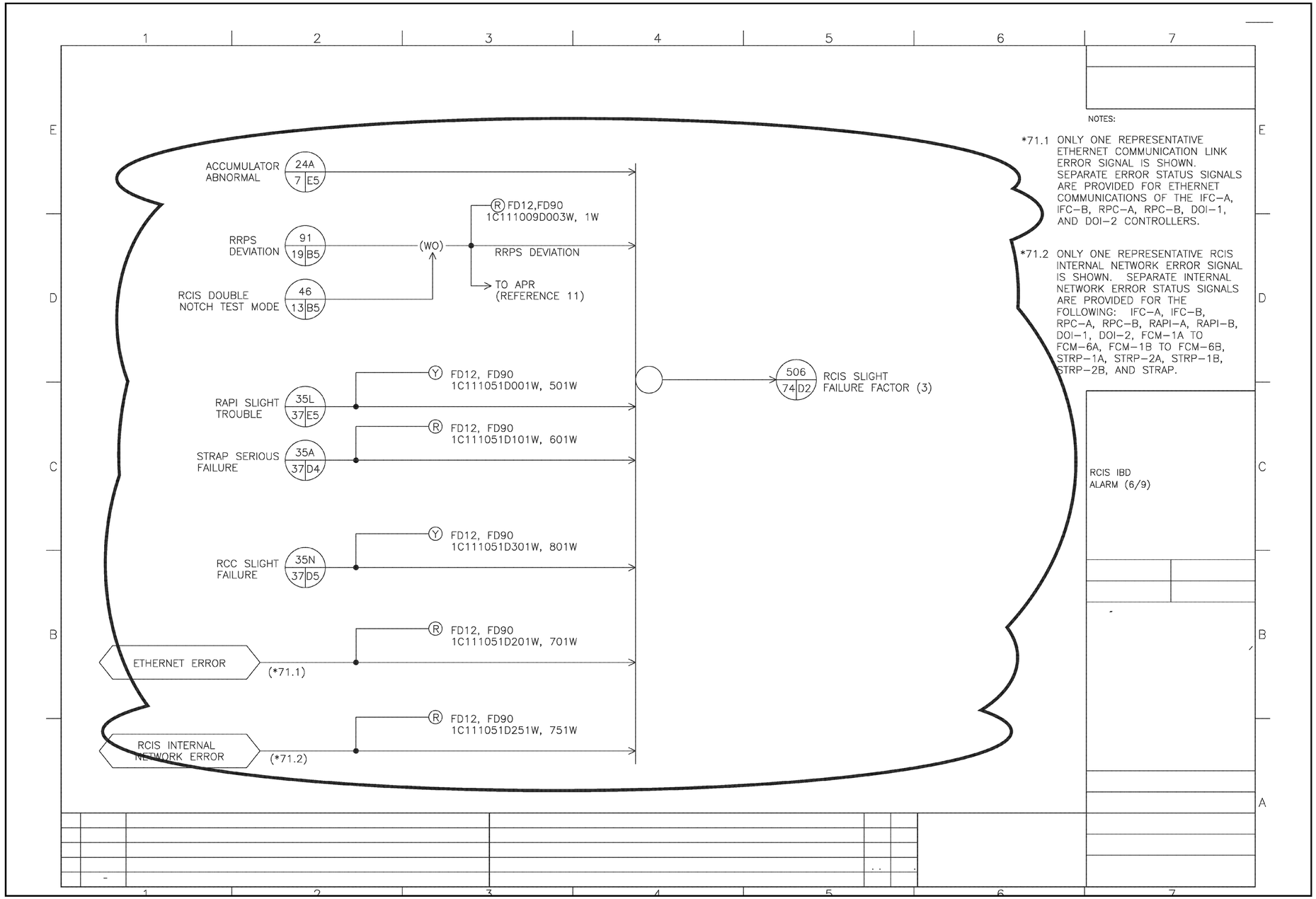

NOTES:

*71.1 ONLY ONE REPRESENTATIVE ETHERNET COMMUNICATION LINK ERROR SIGNAL IS SHOWN. SEPARATE ERROR STATUS SIGNALS ARE PROVIDED FOR ETHERNET COMMUNICATIONS OF THE IFC–A, IFC–B, RPC–A, RPC–B, DOI–1, AND DOI–2 CONTROLLERS.

*71.2 ONLY ONE REPRESENTATIVE RCIS INTERNAL NETWORK ERROR SIGNAL IS SHOWN. SEPARATE INTERNAL NETWORK ERROR STATUS SIGNALS ARE PROVIDED FOR THE FOLLOWING: IFC–A, IFC–B, RPC–A, RPC–B, RAPI–A, RAPI–B, DOI–1, DOI–2, FCM–1A TO FCM–6A, FCM–1B TO FCM–6B, STRP–1A, STRP–2A, STRP–1B, STRP–2B, AND STRAP.

FIGURE 7.7-3 ROD CONTROL AND INFORMATION SYSTEM IBD (Sheet 71 of 114)

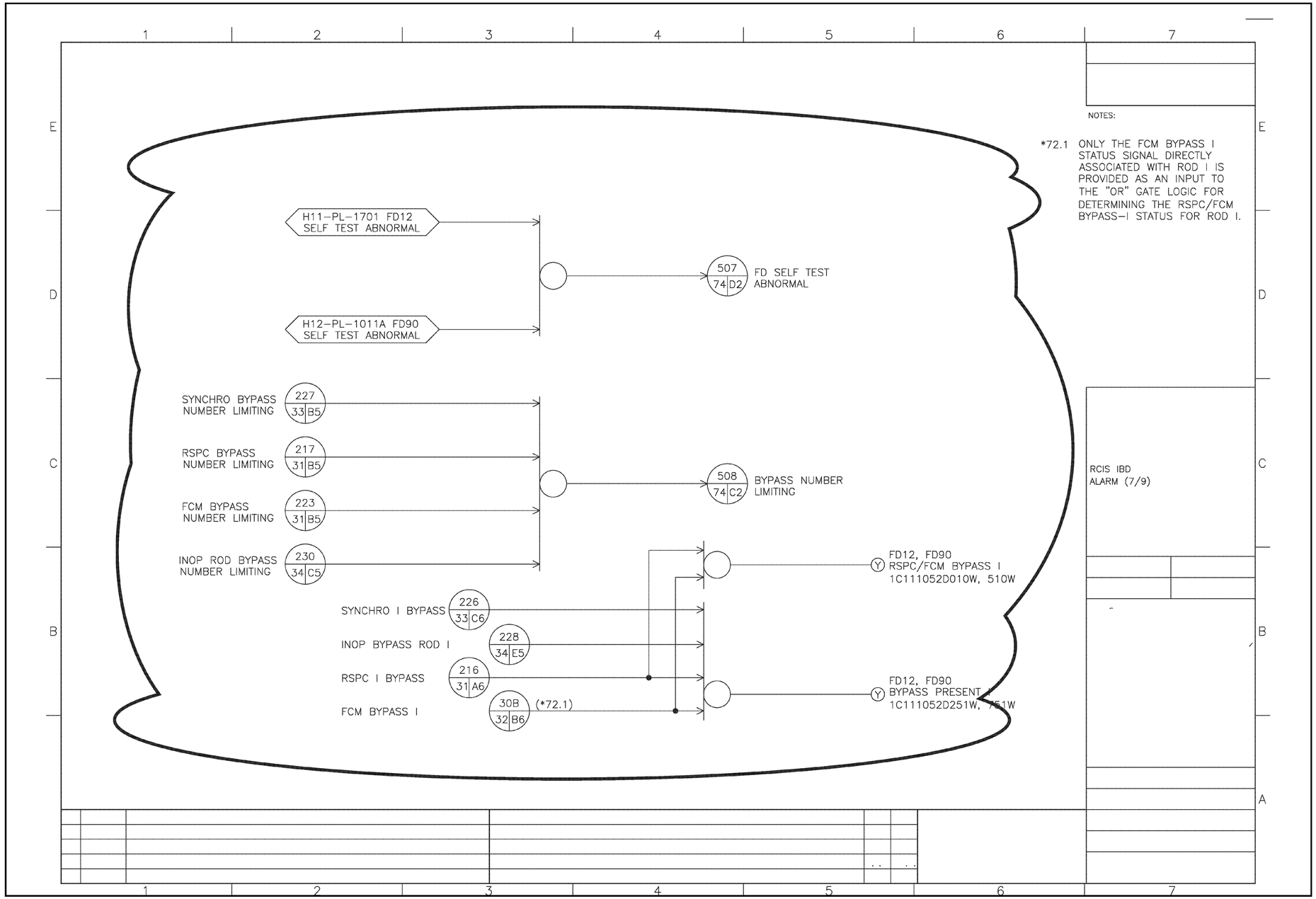

FIGURE 7.7-3 ROD CONTROL AND INFORMATION SYSTEM IBD (Sheet 72 of 114)

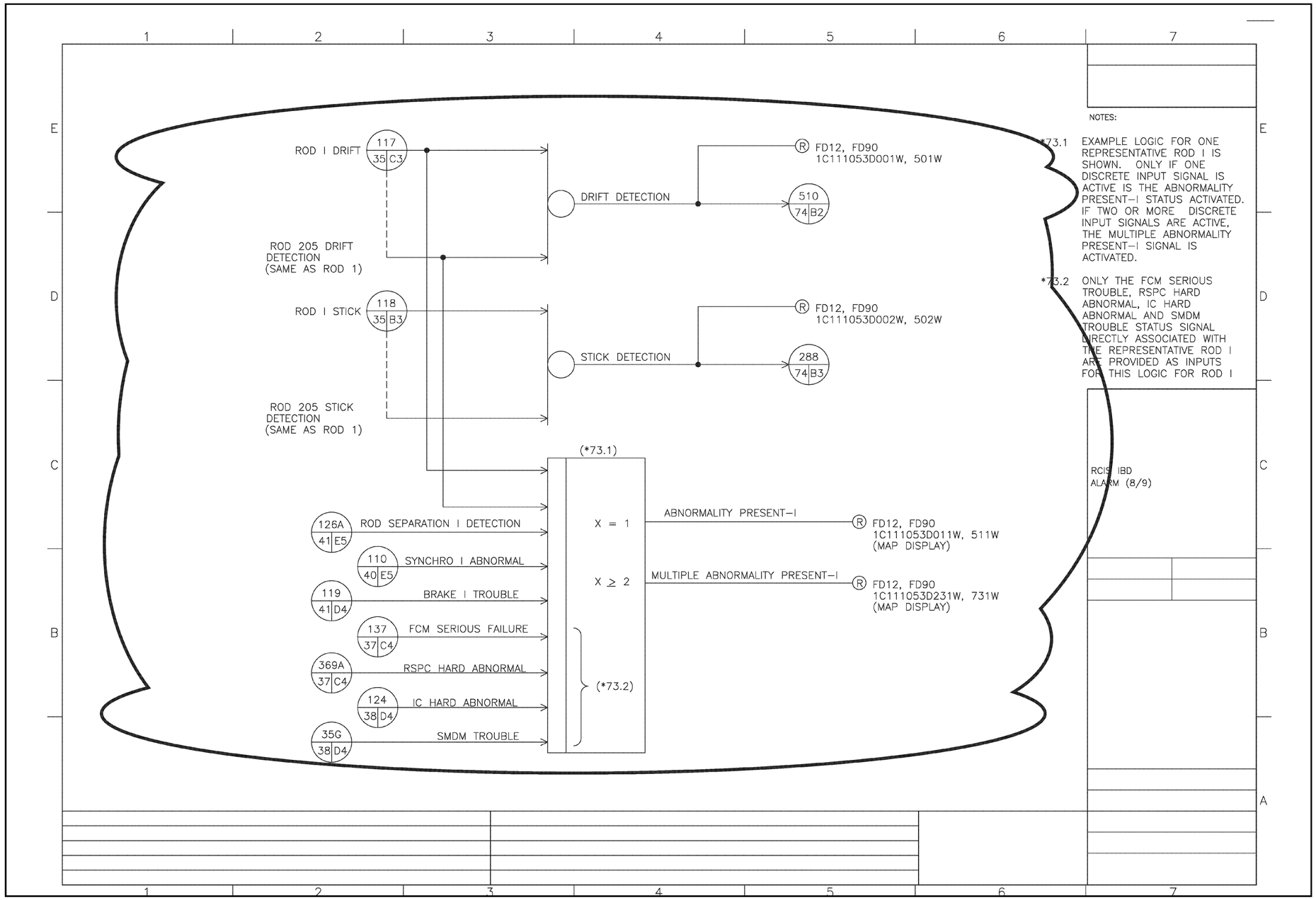

FIGURE 7.7-3 ROD CONTROL AND INFORMATION SYSTEM IBD (Sheet 73 of 114)

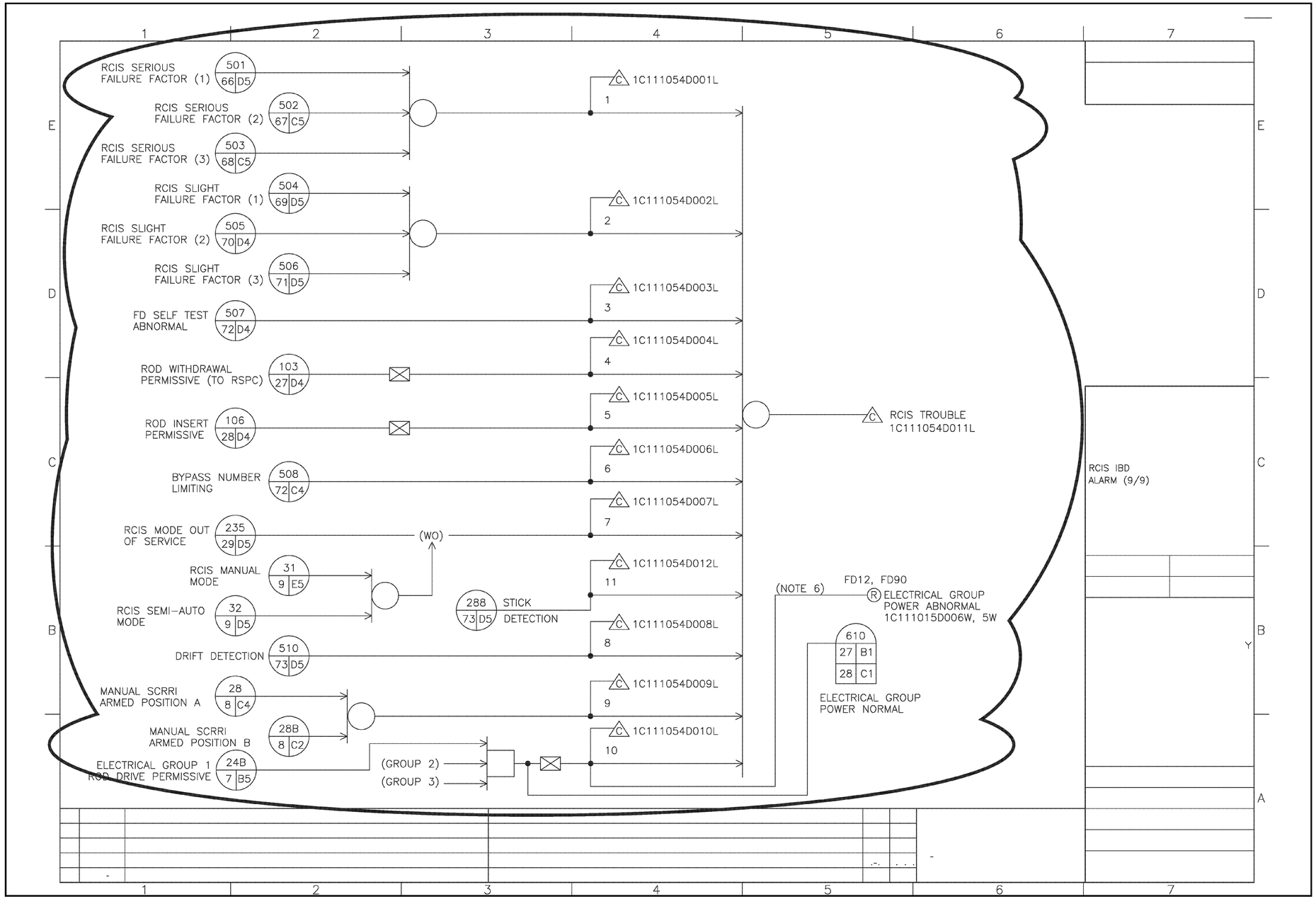

FIGURE 7.7-3 ROD CONTROL AND INFORMATION SYSTEM IBD (Sheet 74 of 114)

TABLE 1 ALARM ITEM TABLE

NO.	ALARM NAMES	DISPLAY POSITION	PRINCIPAL EXTENT	NOTES
1	RCIS SERIOUS FAILURE	FD	1	
2	RCIS SLIGHT FAILURE	FD	2	
3	RCIS FD SELF TEST FAILURE	FD	2	
4	RCIS ROD WITHDRAWAL BLOCK	FD	3	
5	RCIS ROD INSERT BLOCK	FD	3	
6	RCIS BYPASS NUMBER LIMITING	FD	3	
7	RCIS MODE MANUAL CHANGE	FD	3	
8	RCIS DRIFT DETECTION	FD	3	
9	RCIS MANUAL SCRRI ARMED POSITION	FD	3	
10	ELECTRICAL GROUP POWER ABNORMAL	FD	3	
11	RCIS STICK DETECTION	FD	3	
12				
13				
14				
15				
16				
17				
18				
19				
20				
21				
22				
23				
24				
25				

1. SERIOUS FAILURE
2. SLIGHT FAILURE
3. CONDITION DISPLAY

NOTES:

75.1
ALARM OF NOTES (TABLE 1) INPUT TO PLANT INFORMATION AND CONTROL SYSTEM.

RCIS IBD
ALARM ITEM TABLE

FIGURE 7.7-3 ROD CONTROL AND INFORMATION SYSTEM IBD (Sheet 75 of 114)

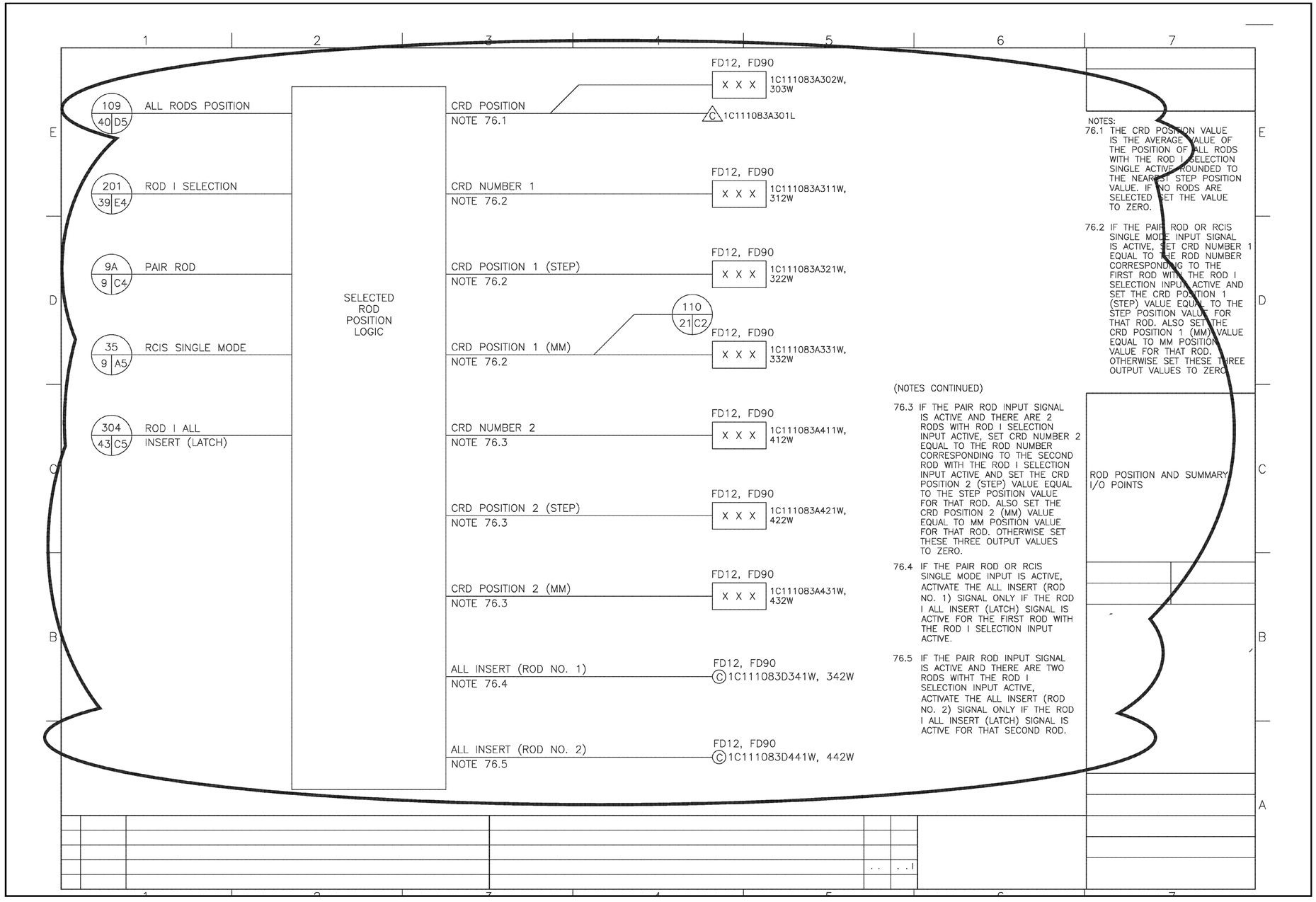

FIGURE 7.7-3 ROD CONTROL AND INFORMATION SYSTEM IBD (Sheet 76 of 114)

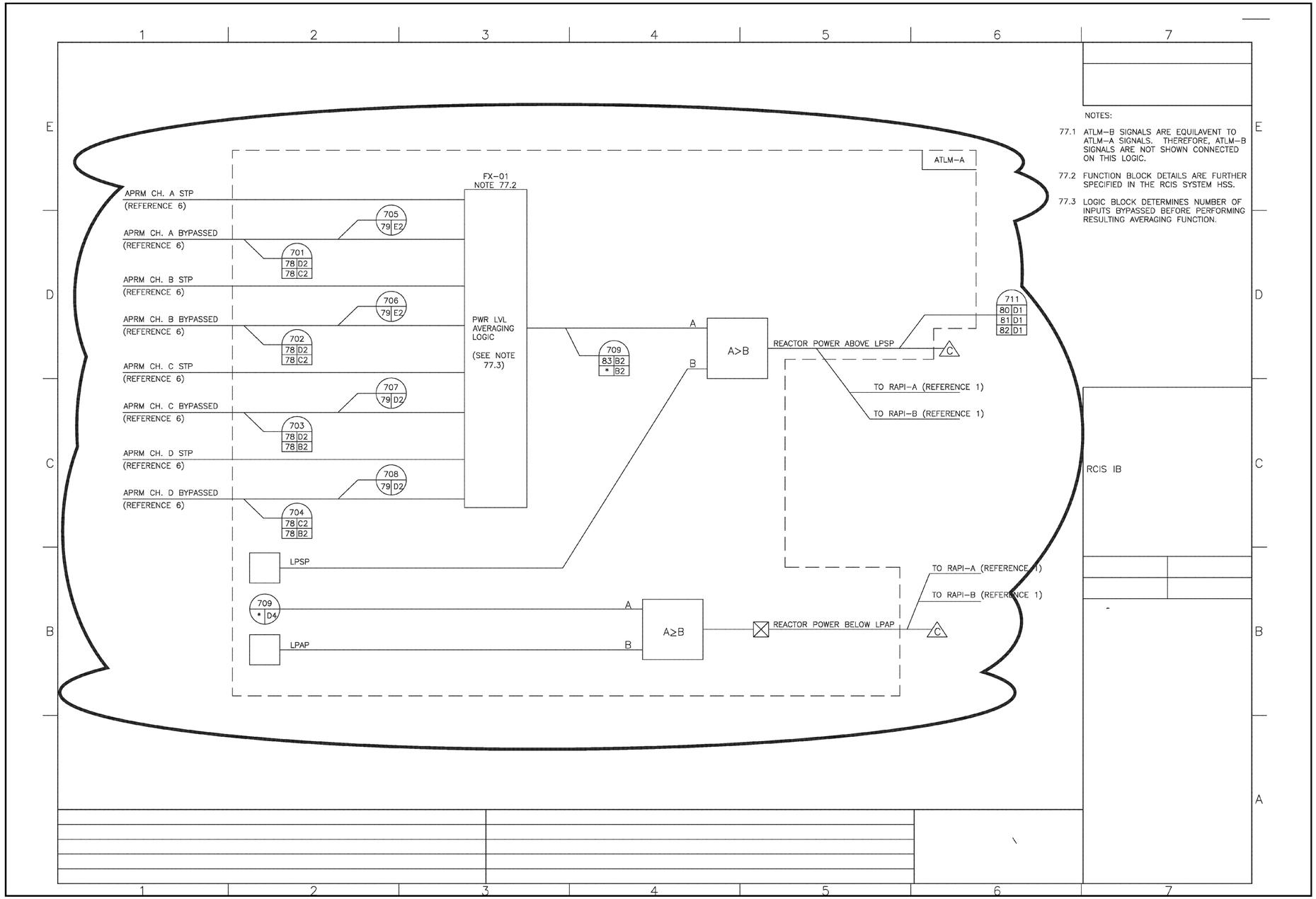

FIGURE 7.7-3 ROD CONTROL AND INFORMATION SYSTEM IBD (Sheet 77 of 114)

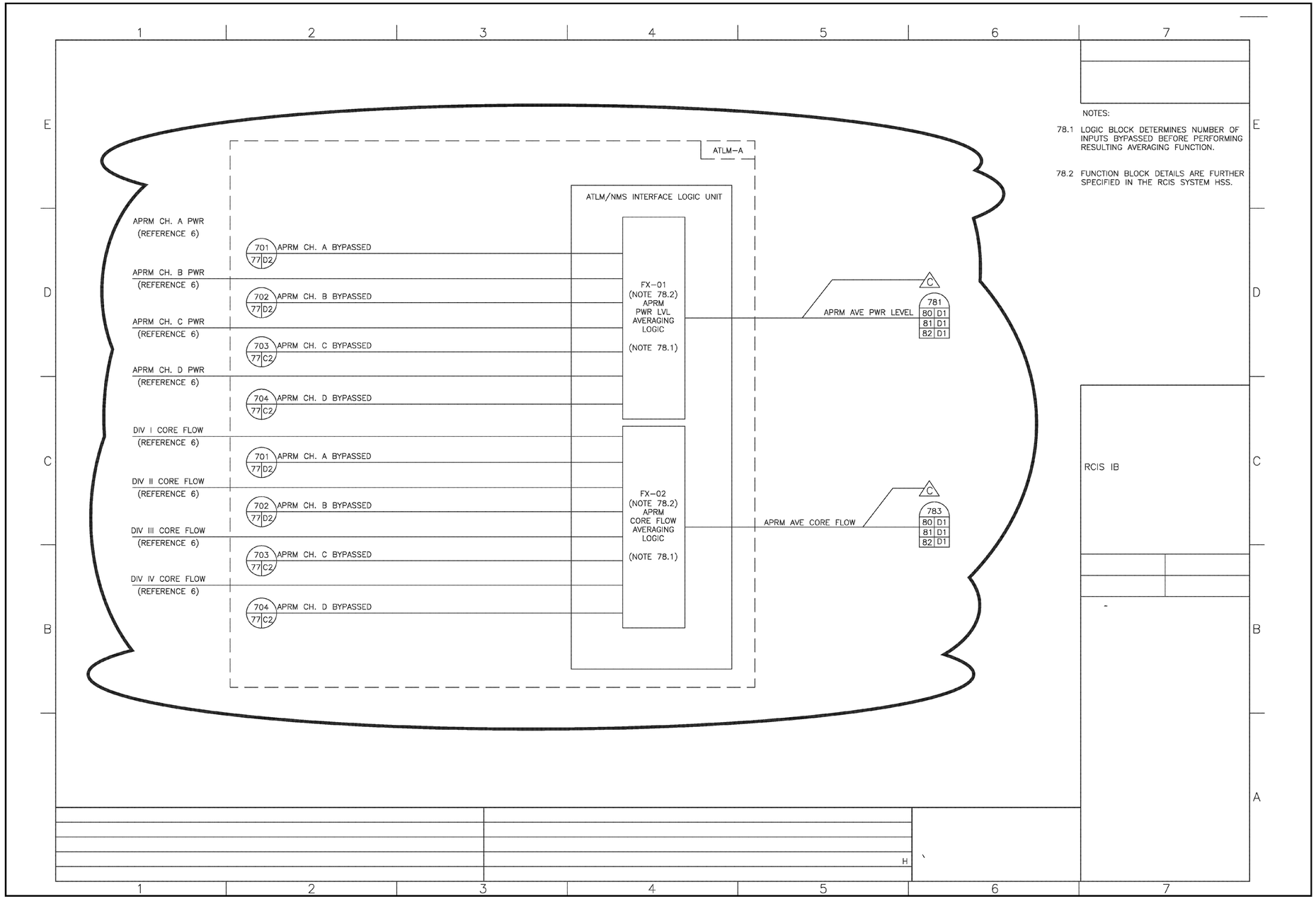

FIGURE 7.7-3 ROD CONTROL AND INFORMATION SYSTEM IBD (Sheet 78 of 114)

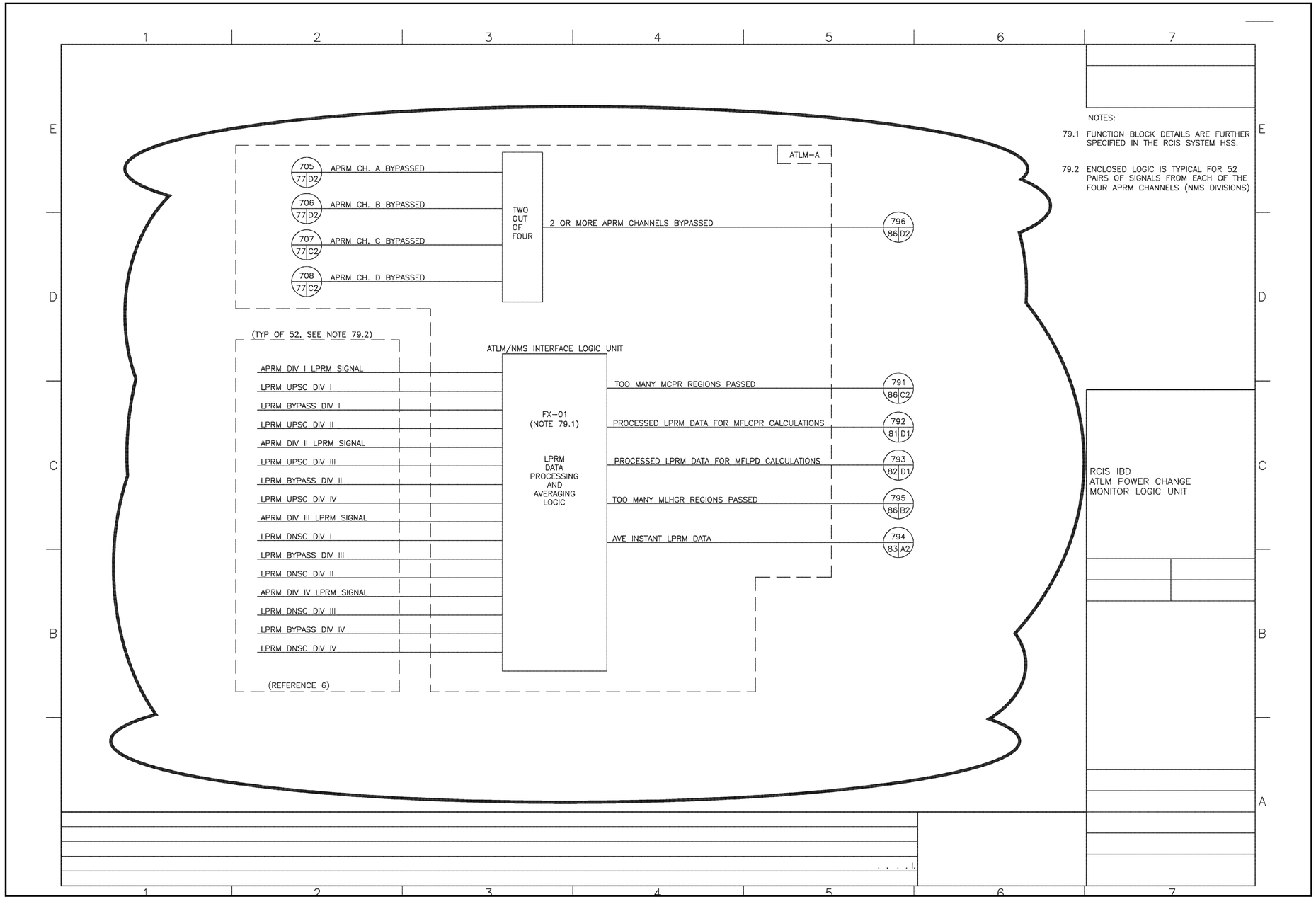

FIGURE 7.7-3 ROD CONTROL AND INFORMATION SYSTEM IBD (Sheet 79 of 114)

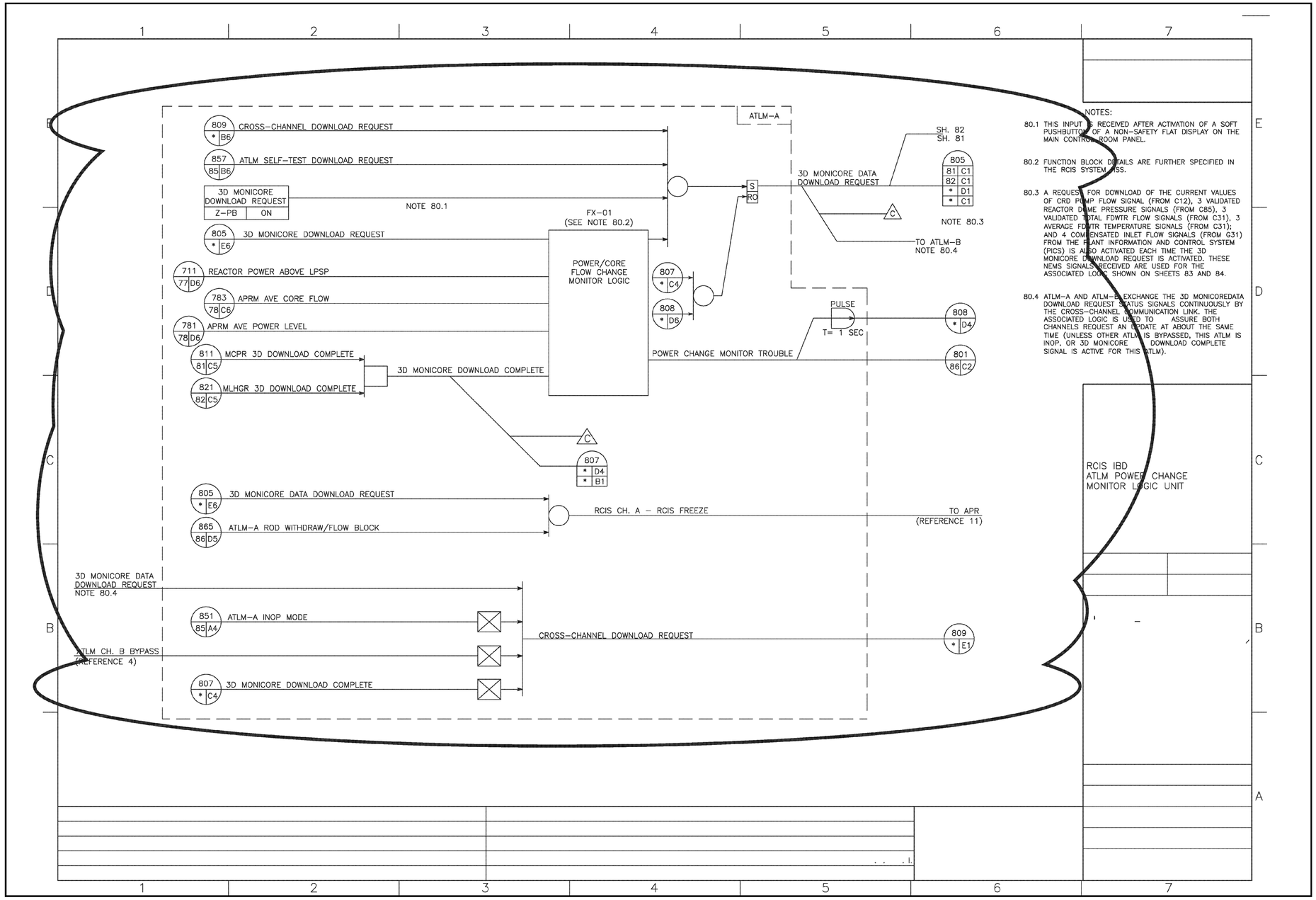

FIGURE 7.7-3 ROD CONTROL AND INFORMATION SYSTEM IBD (Sheet 80 of 114)

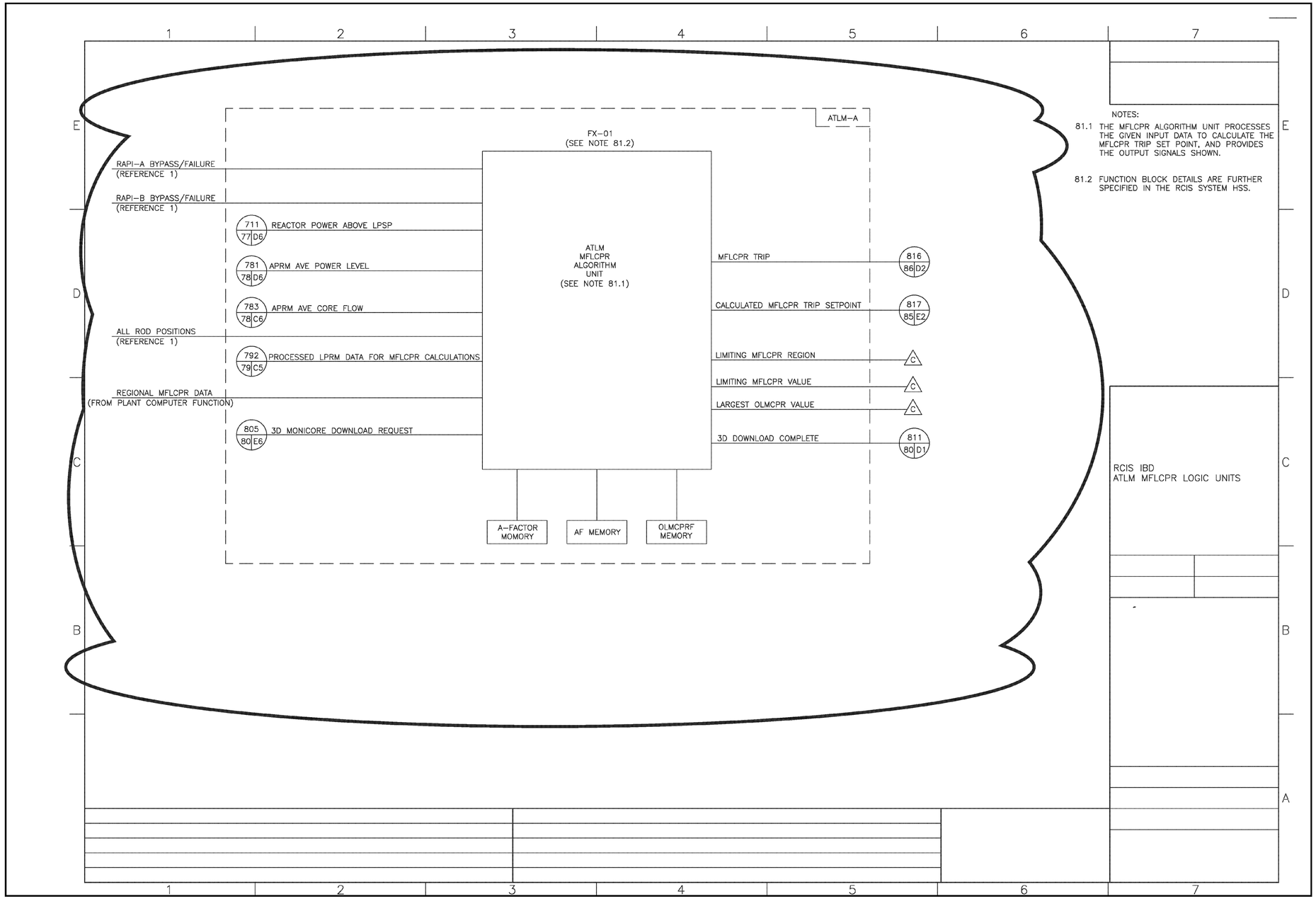

FIGURE 7.7-3 ROD CONTROL AND INFORMATION SYSTEM IBD (Sheet 81 of 114)

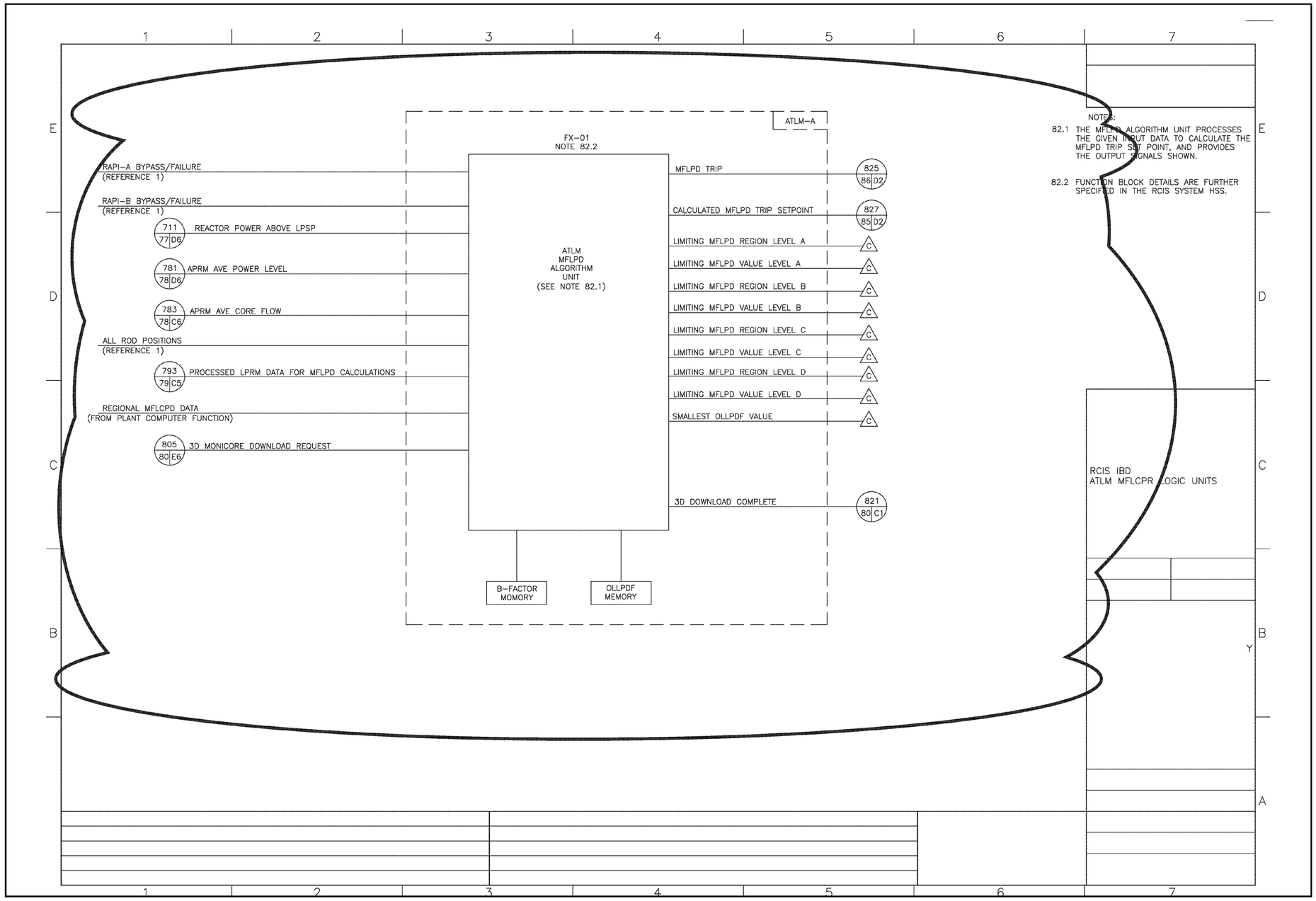

FIGURE 7.7-3 ROD CONTROL AND INFORMATION SYSTEM IBD (Sheet 82 of 114)

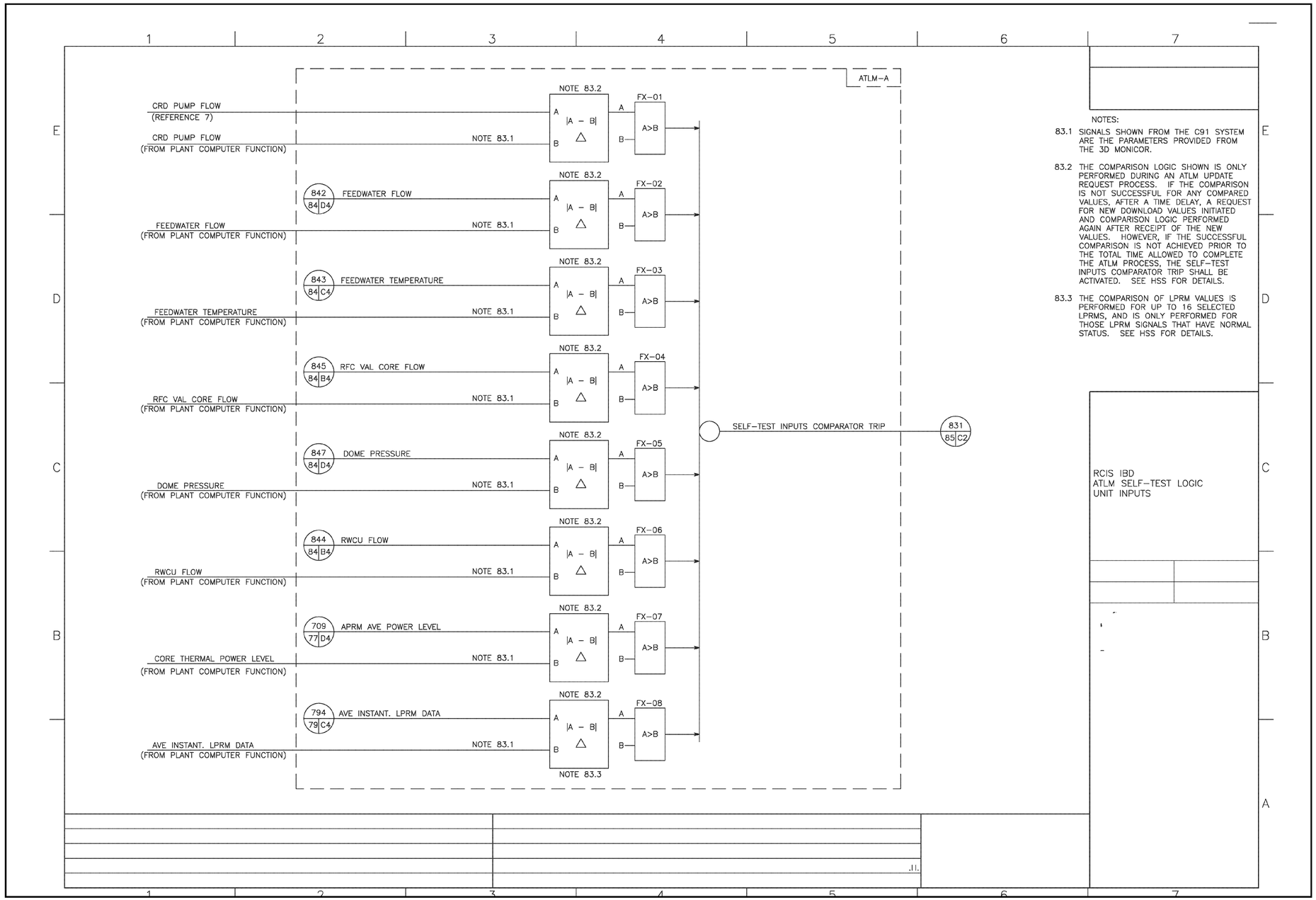

NOTES:

83.1 SIGNALS SHOWN FROM THE C91 SYSTEM ARE THE PARAMETERS PROVIDED FROM THE 3D MONICOR.

83.2 THE COMPARISON LOGIC SHOWN IS ONLY PERFORMED DURING AN ATLM UPDATE REQUEST PROCESS. IF THE COMPARISON IS NOT SUCCESSFUL FOR ANY COMPARED VALUES, AFTER A TIME DELAY, A REQUEST FOR NEW DOWNLOAD VALUES INITIATED AND COMPARISON LOGIC PERFORMED AGAIN AFTER RECEIPT OF THE NEW VALUES. HOWEVER, IF THE SUCCESSFUL COMPARISON IS NOT ACHIEVED PRIOR TO THE TOTAL TIME ALLOWED TO COMPLETE THE ATLM PROCESS, THE SELF–TEST INPUTS COMPARATOR TRIP SHALL BE ACTIVATED. SEE HSS FOR DETAILS.

83.3 THE COMPARISON OF LPRM VALUES IS PERFORMED FOR UP TO 16 SELECTED LPRMS, AND IS ONLY PERFORMED FOR THOSE LPRM SIGNALS THAT HAVE NORMAL STATUS. SEE HSS FOR DETAILS.

FIGURE 7.7-3 ROD CONTROL AND INFORMATION SYSTEM IBD (Sheet 83 of 114)

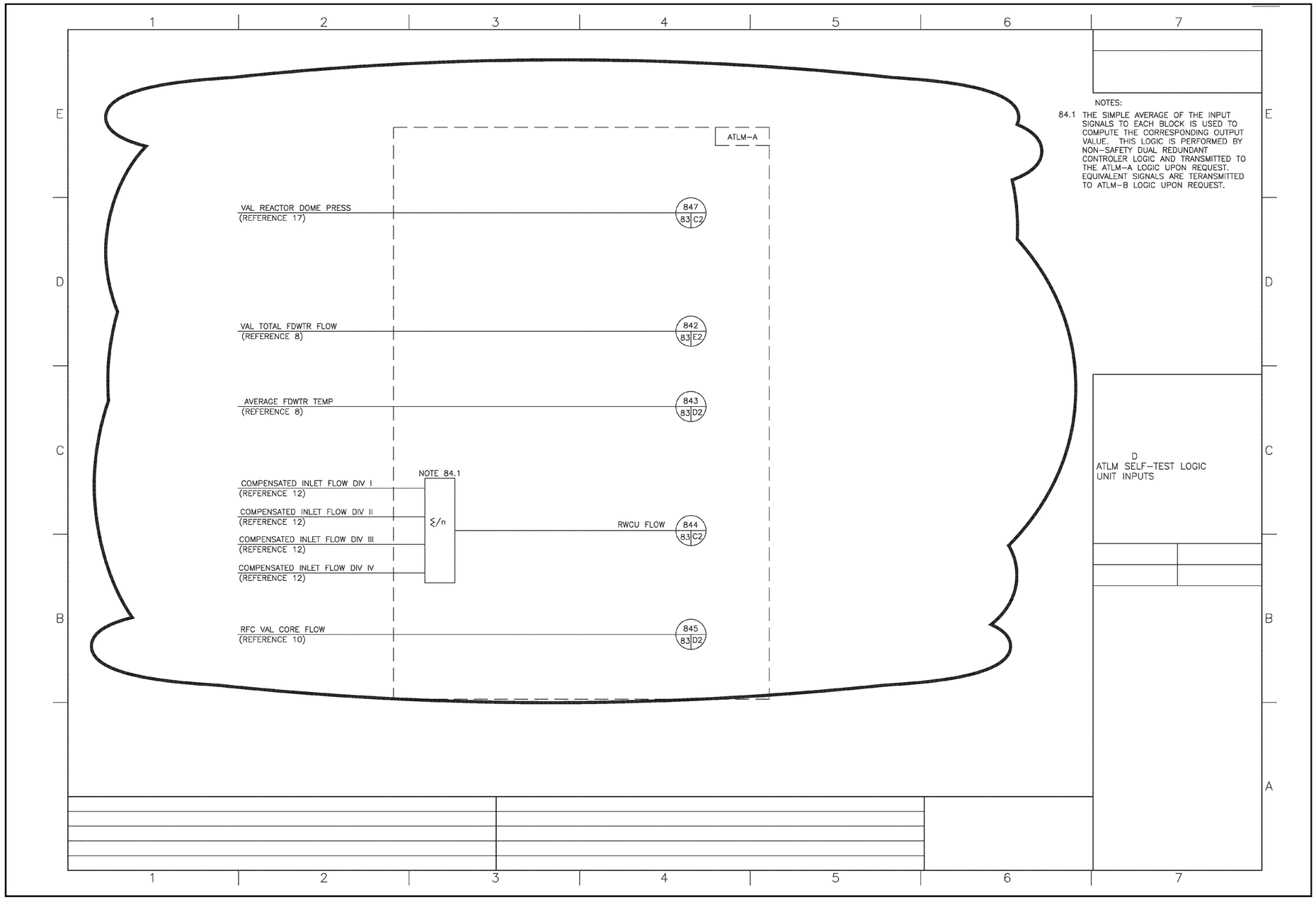

FIGURE 7.7-3 ROD CONTROL AND INFORMATION SYSTEM IBD (Sheet 84 of 114)

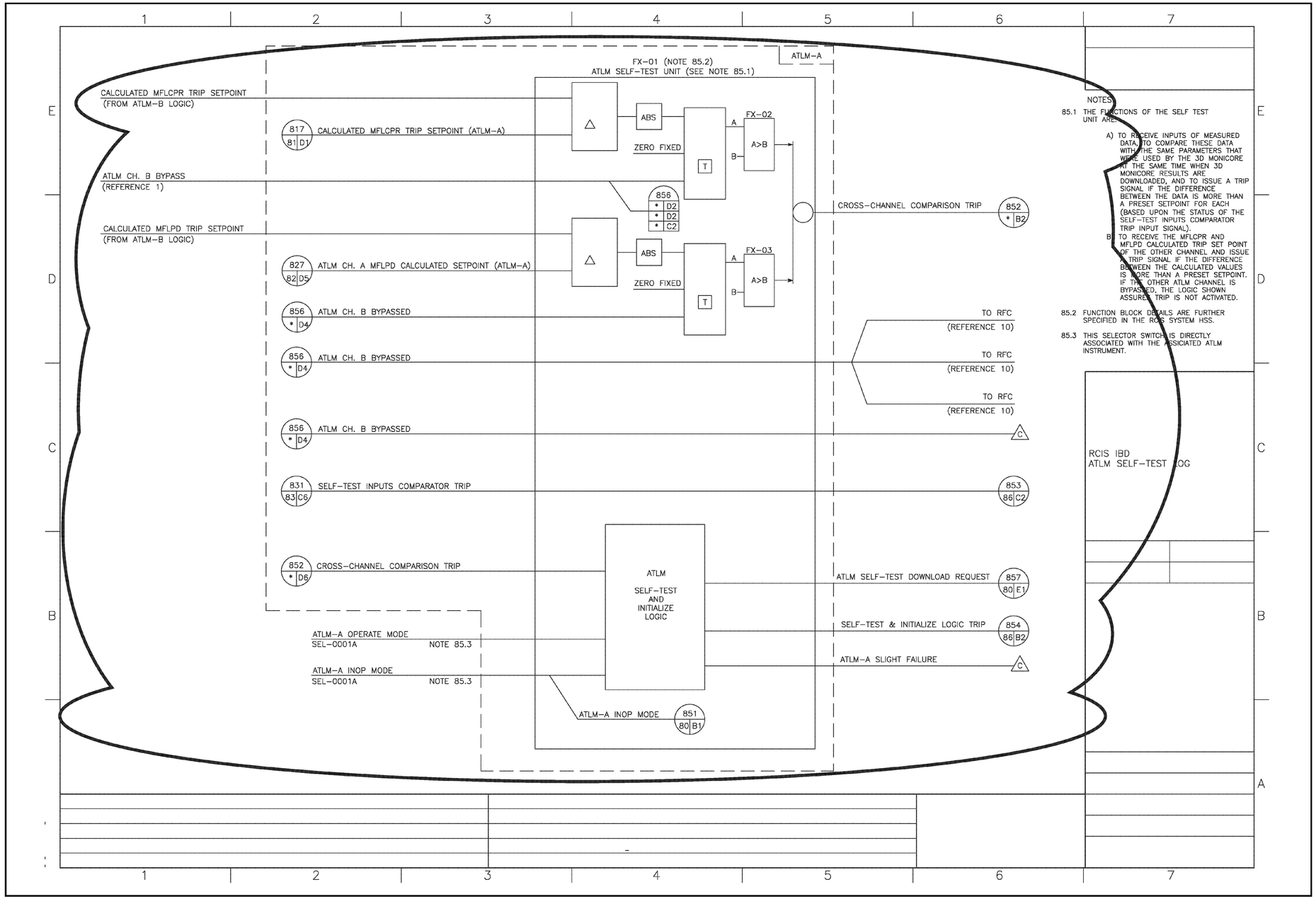

FIGURE 7.7-3 ROD CONTROL AND INFORMATION SYSTEM IBD (Sheet 85 of 114)

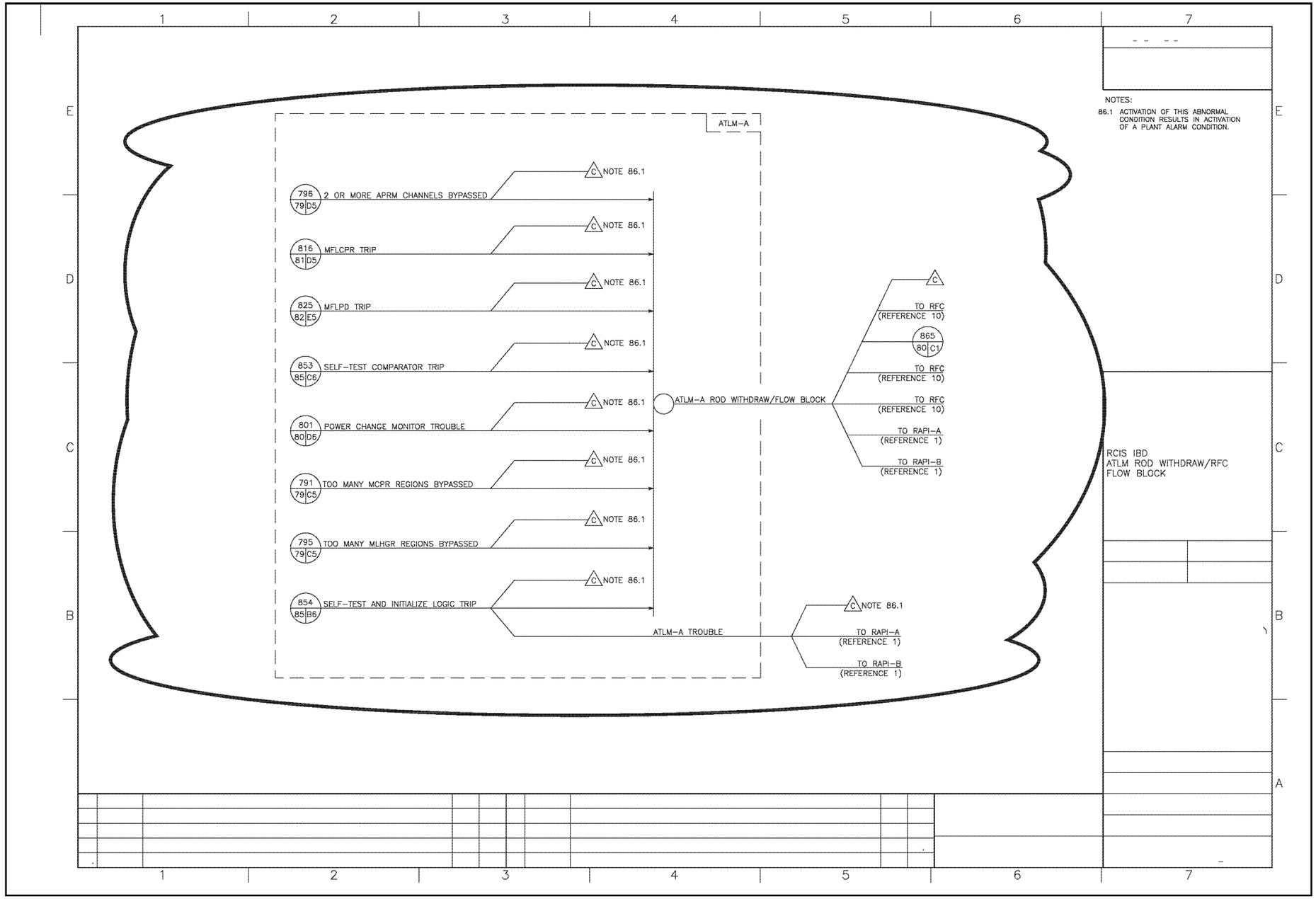

FIGURE 7.7-3 ROD CONTROL AND INFORMATION SYSTEM IBD (Sheet 86 of 87)

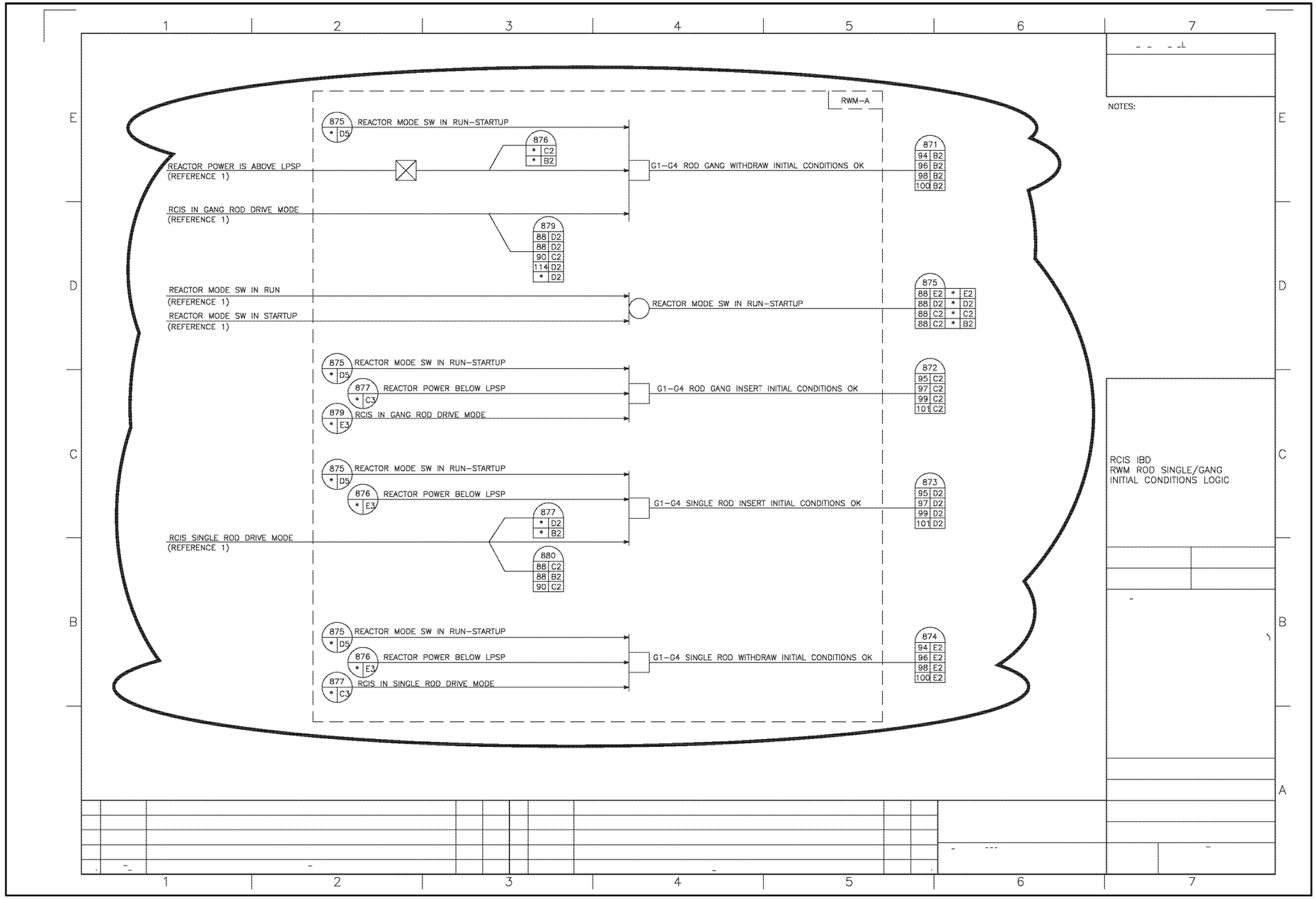

FIGURE 7.7-3 ROD CONTROL AND INFORMATION SYSTEM IBD (Sheet 87 of 87)

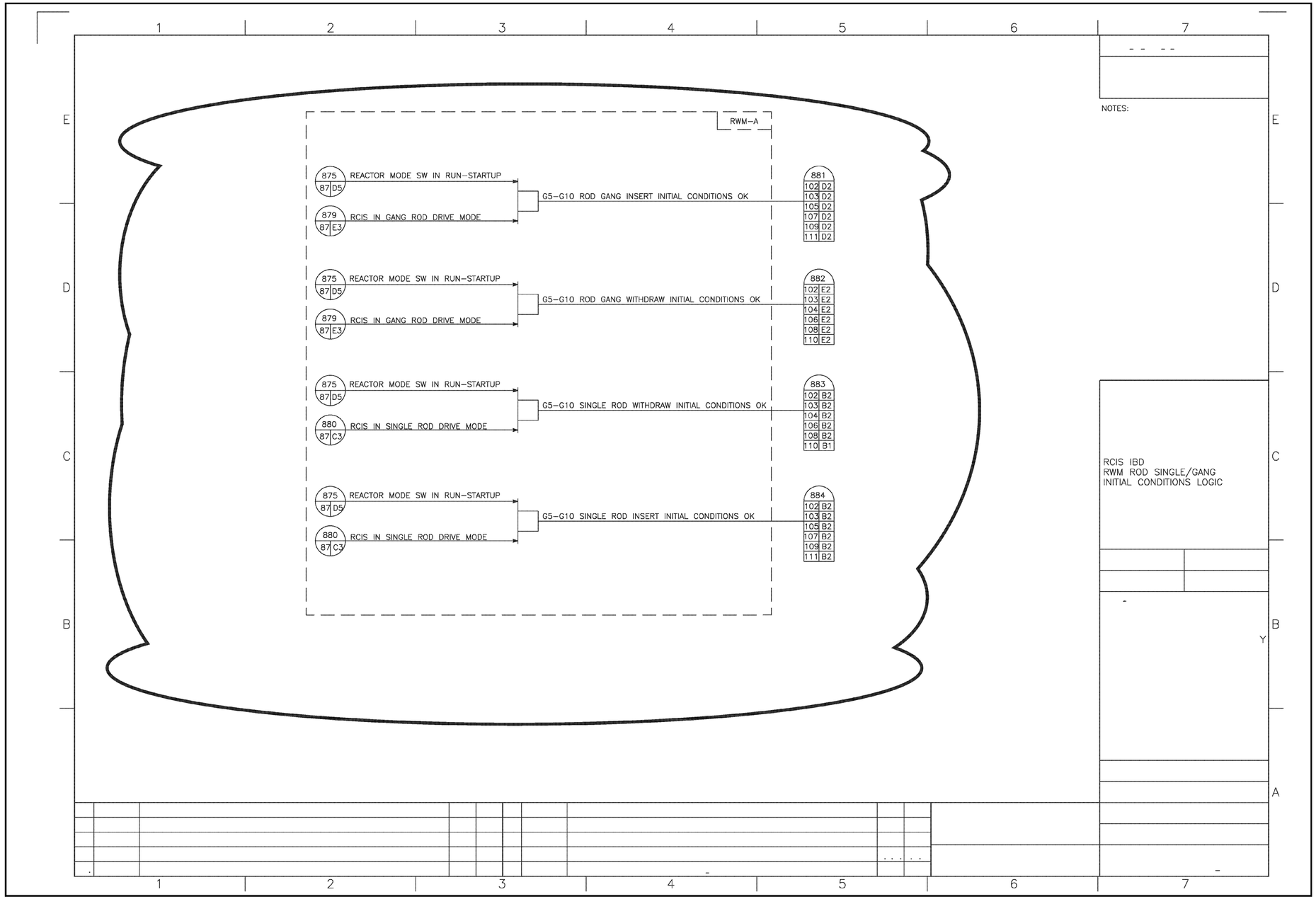

FIGURE 7.7-3 ROD CONTROL AND INFORMATION SYSTEM IBD (Sheet 88 of 114)

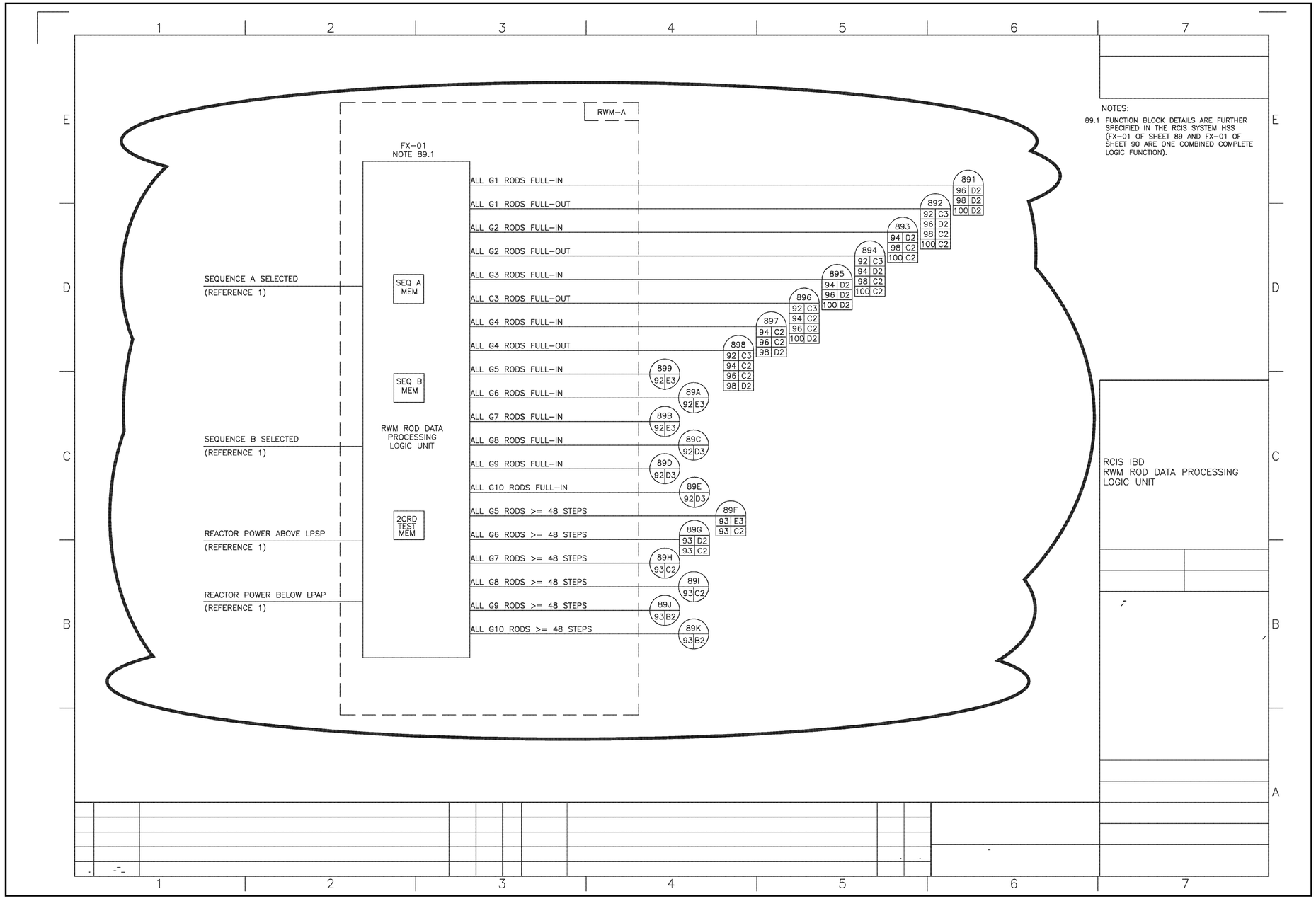

FIGURE 7.7-3 ROD CONTROL AND INFORMATION SYSTEM IBD (Sheet 89 of 114)

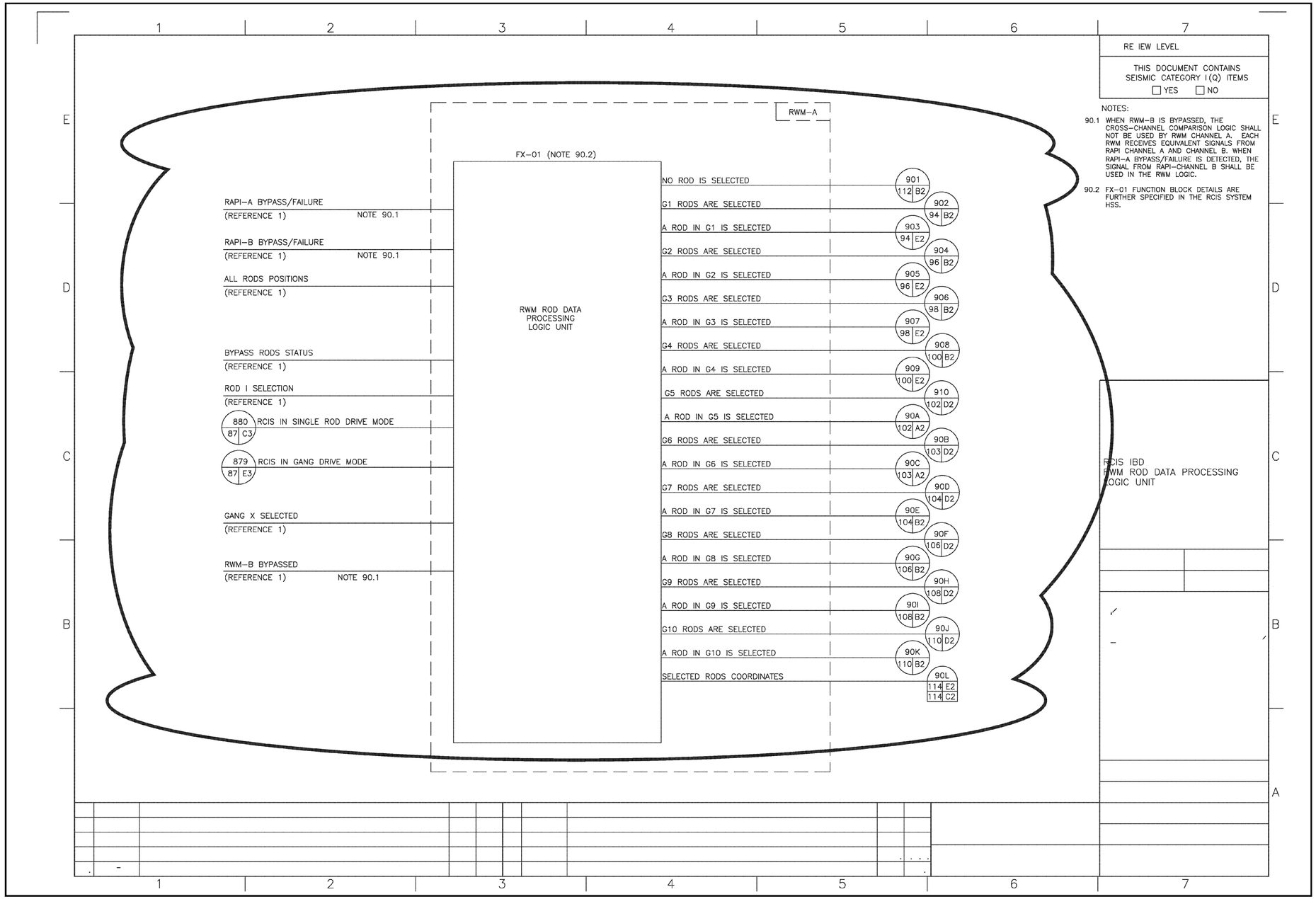

FIGURE 7.7-3 ROD CONTROL AND INFORMATION SYSTEM IBD (Sheet 90 of 114)

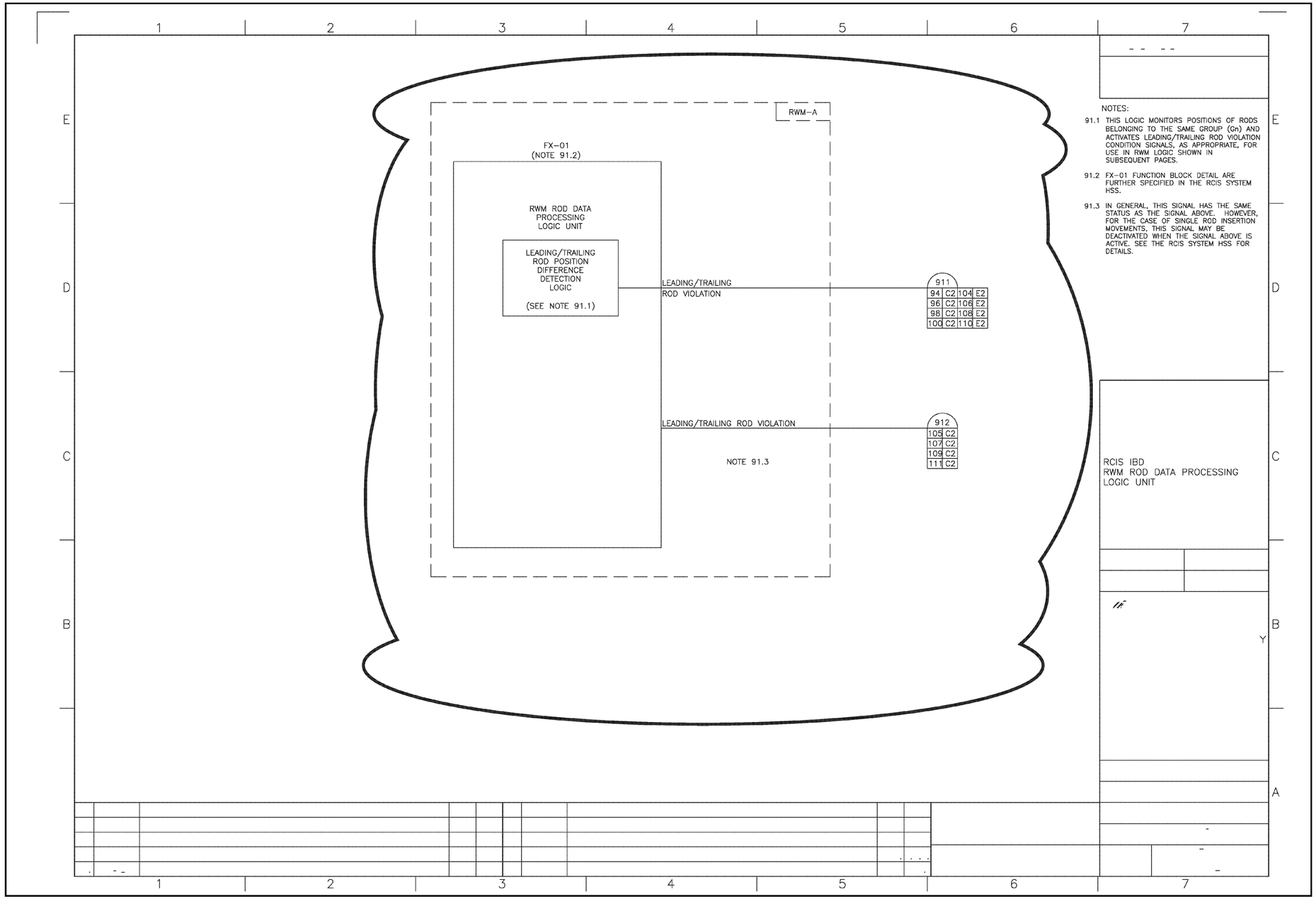

FIGURE 7.7-3 ROD CONTROL AND INFORMATION SYSTEM IBD (Sheet 91 of 114)

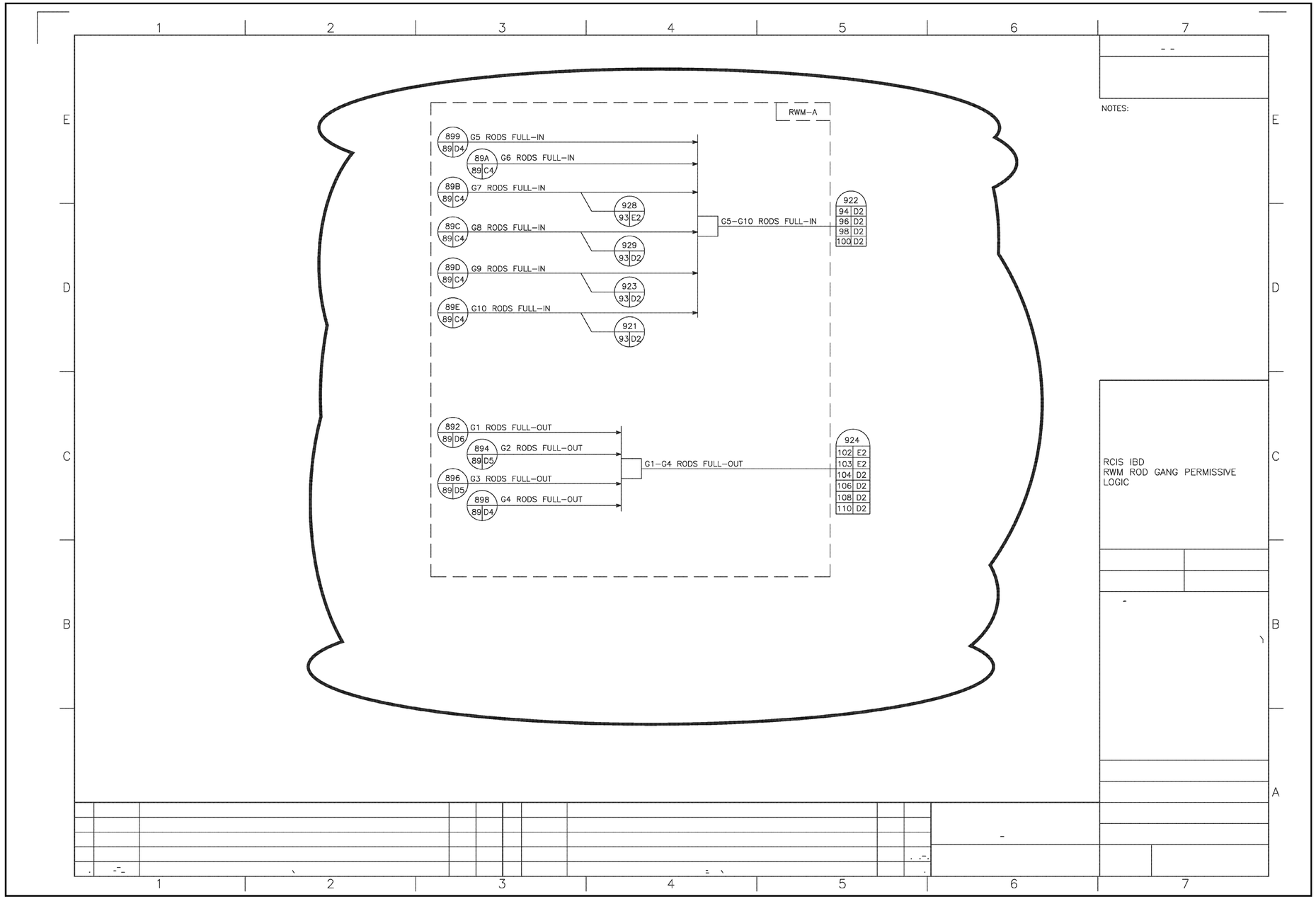

FIGURE 7.7-3 ROD CONTROL AND INFORMATION SYSTEM IBD (Sheet 92 of 114)

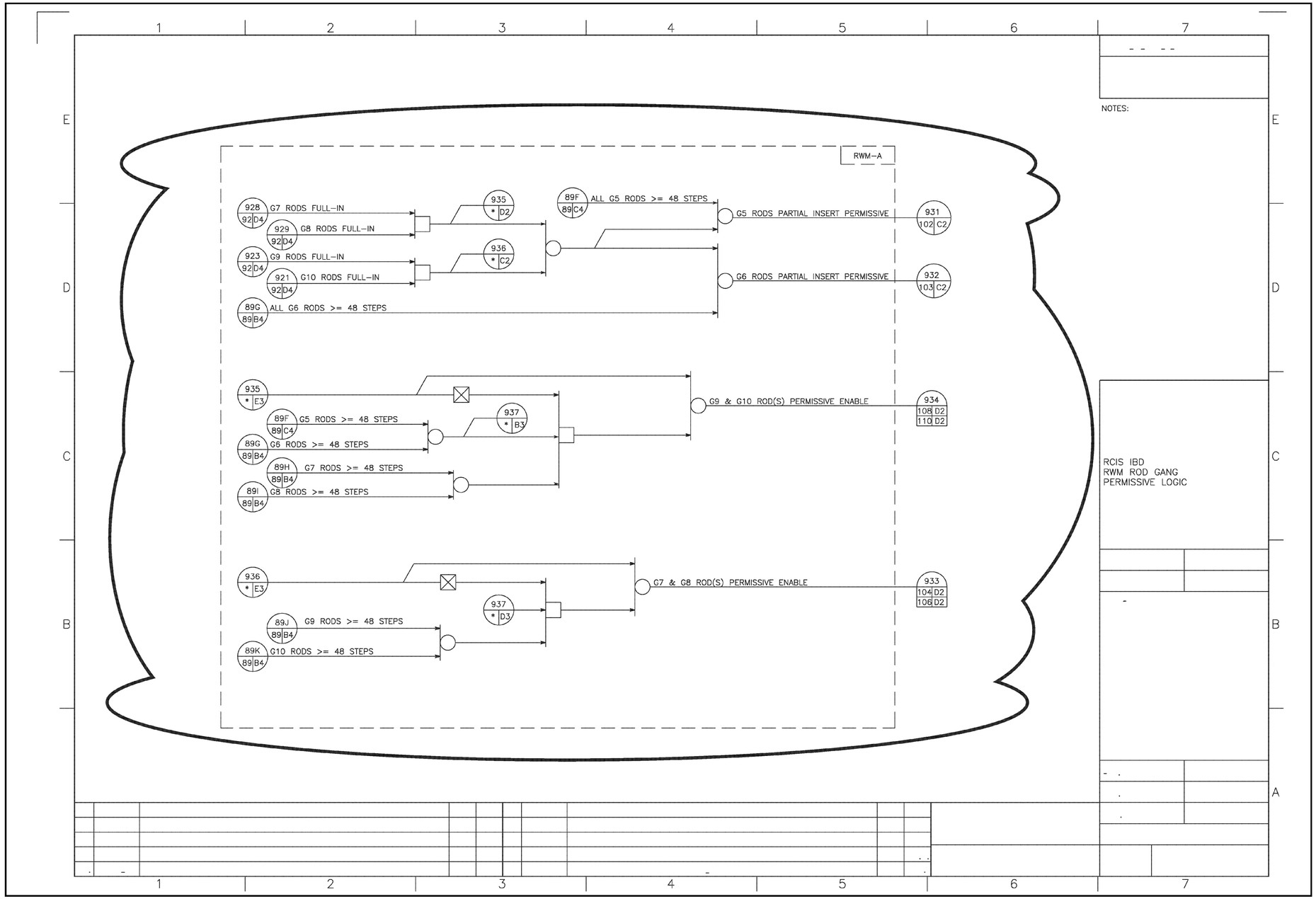

FIGURE 7.7-3 ROD CONTROL AND INFORMATION SYSTEM IBD (Sheet 93 of 114)

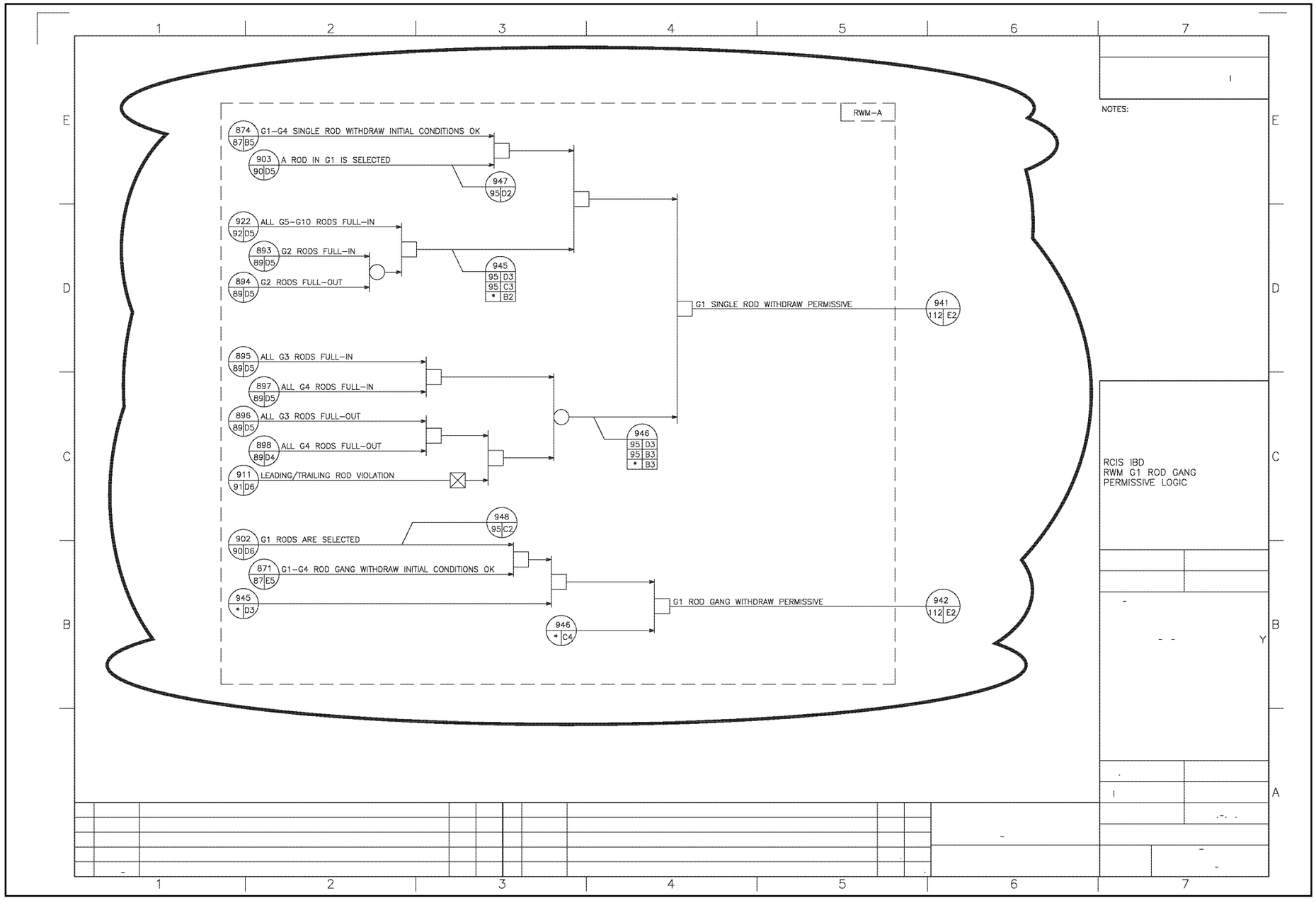

FIGURE 7.7-3 ROD CONTROL AND INFORMATION SYSTEM IBD (Sheet 94 of 114)

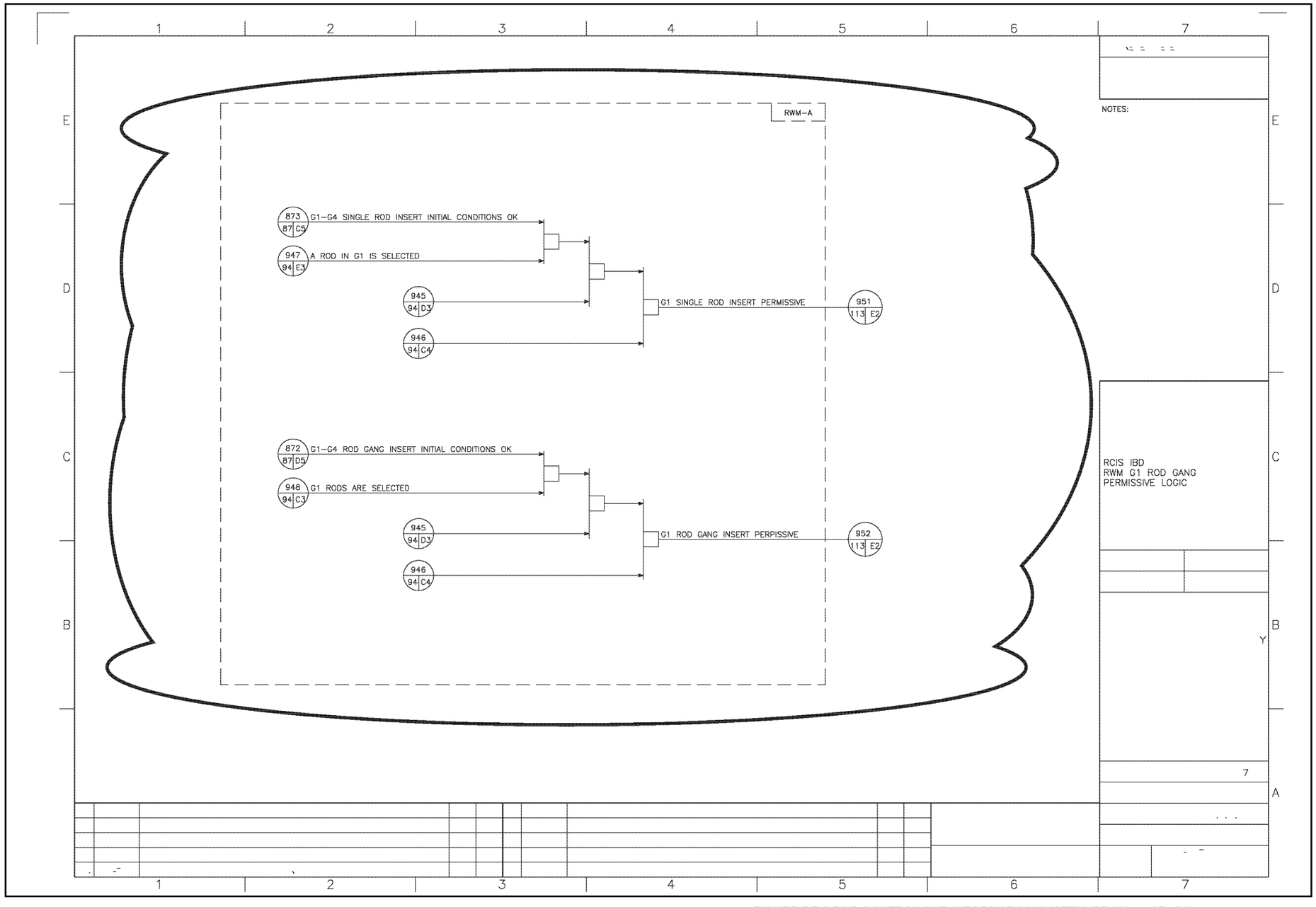

FIGURE 7.7-3 ROD CONTROL AND INFORMATION SYSTEM IBD (Sheet 95 of 114)

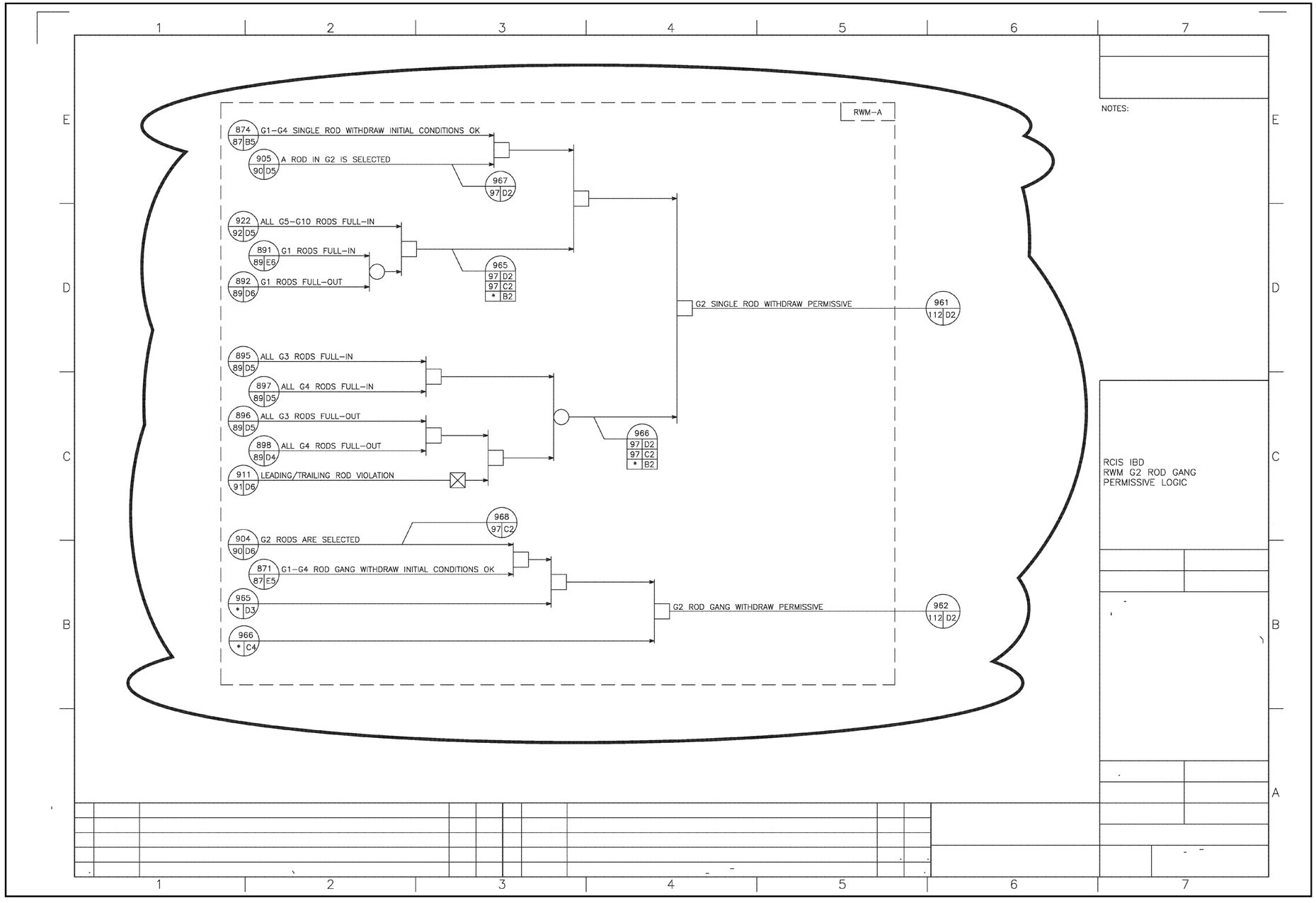

FIGURE 7.7-3 ROD CONTROL AND INFORMATION SYSTEM IBD (Sheet 96 of 114)

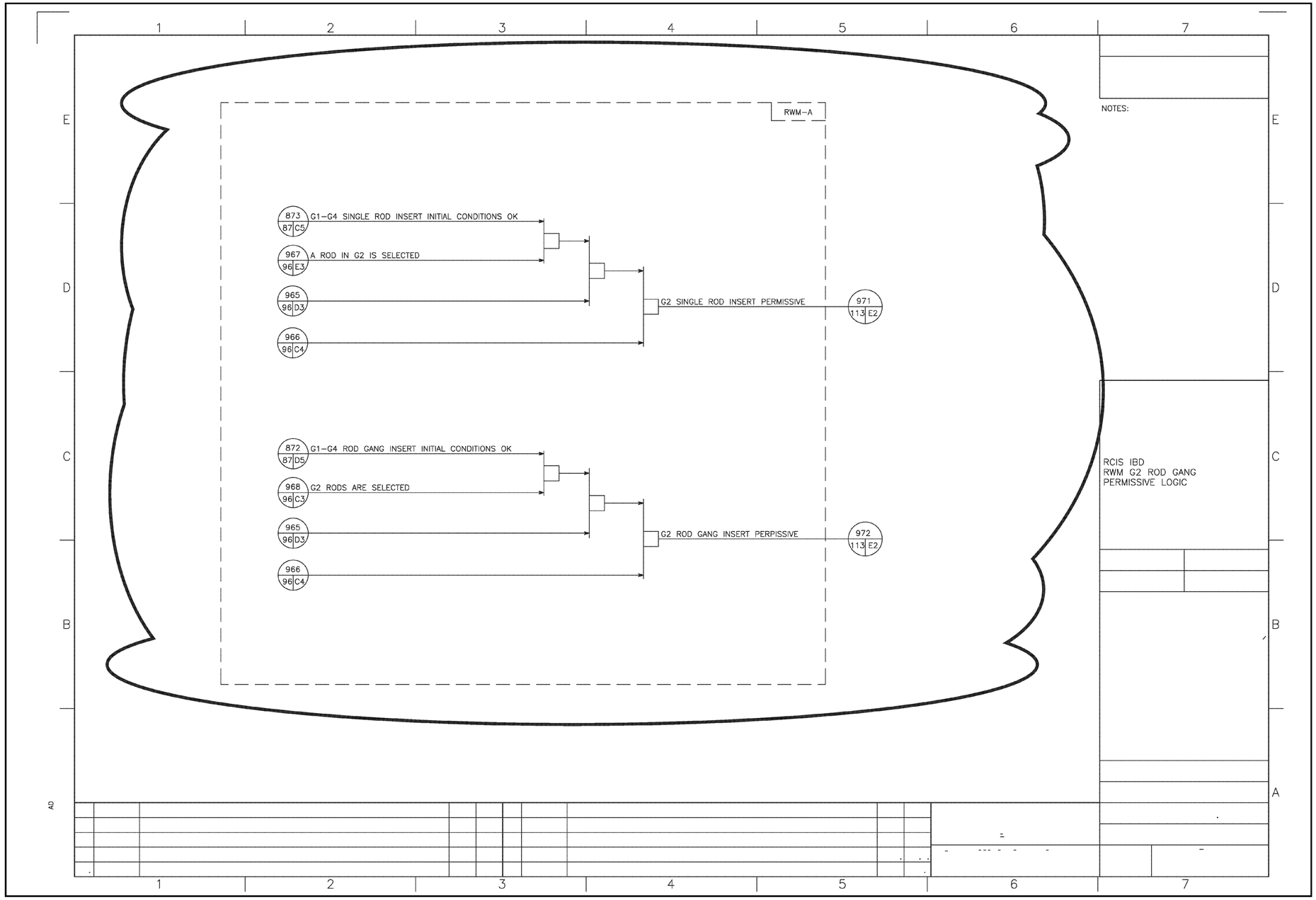

FIGURE 7.7-3 ROD CONTROL AND INFORMATION SYSTEM IBD (Sheet 97 of 114)

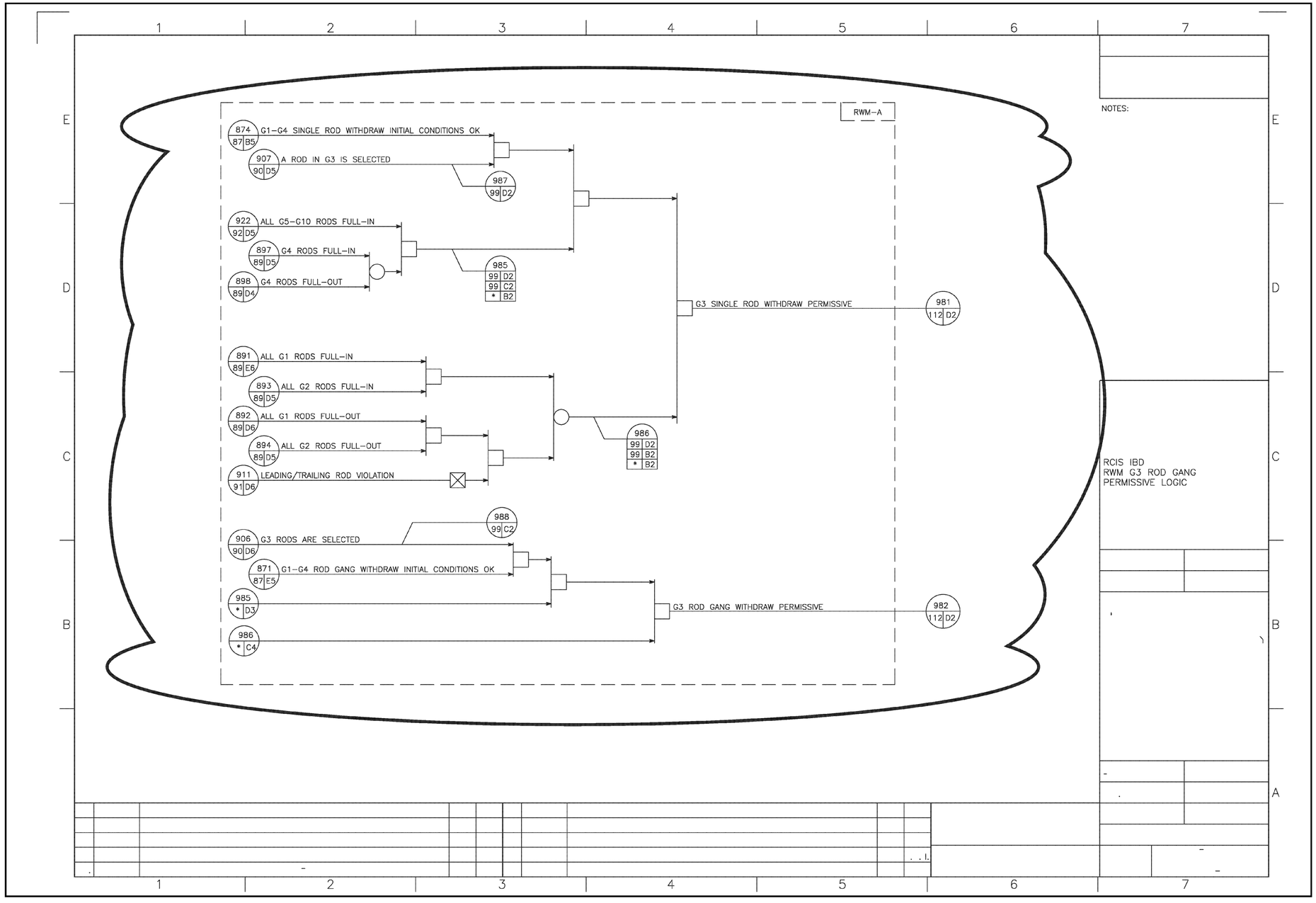

FIGURE 7.7-3 ROD CONTROL AND INFORMATION SYSTEM IBD (Sheet 98 of 114)

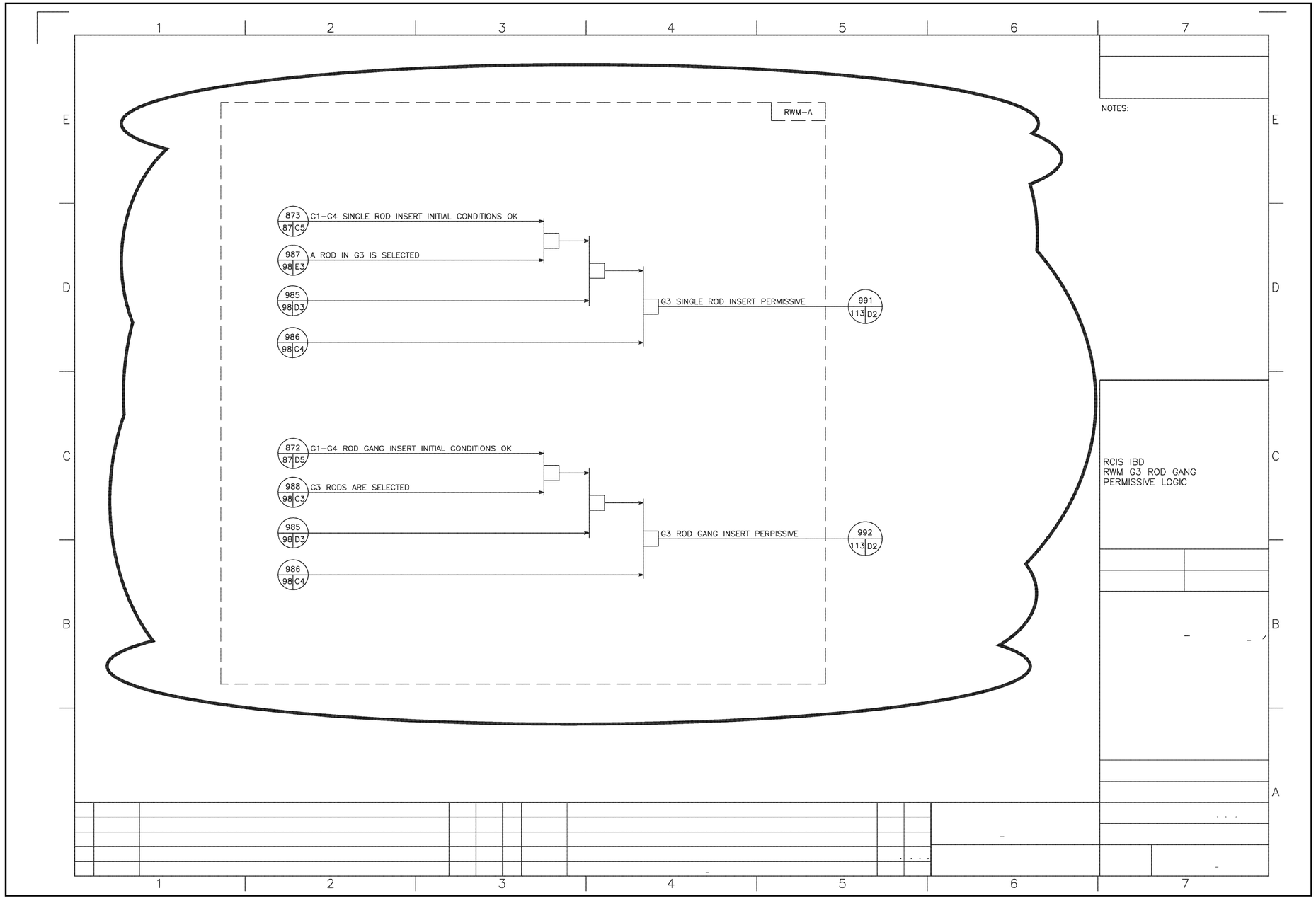

FIGURE 7.7-3 ROD CONTROL AND INFORMATION SYSTEM IBD (Sheet 99 of 114)

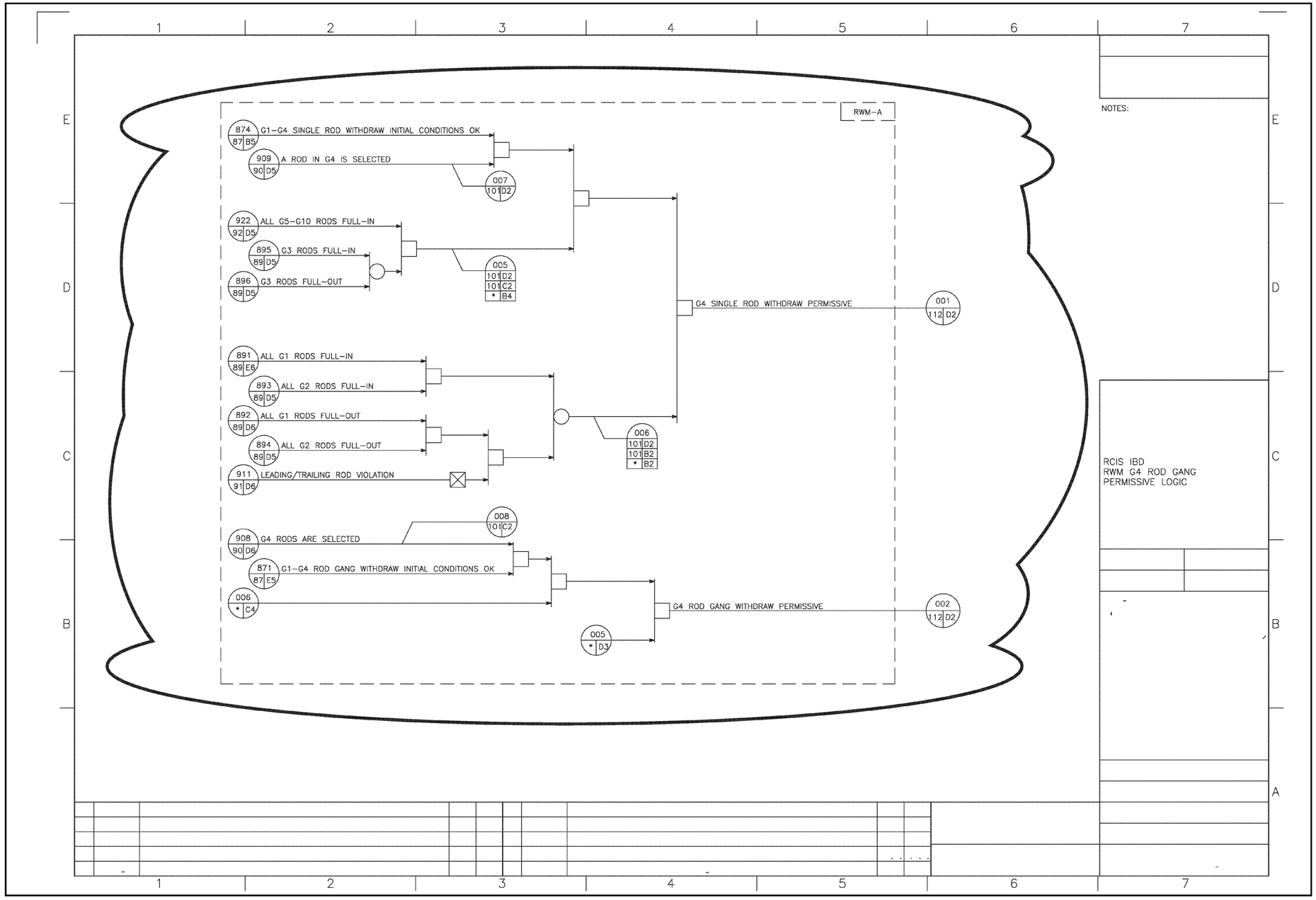

FIGURE 7.7-3 ROD CONTROL AND INFORMATION SYSTEM IBD (Sheet 100 of 114)

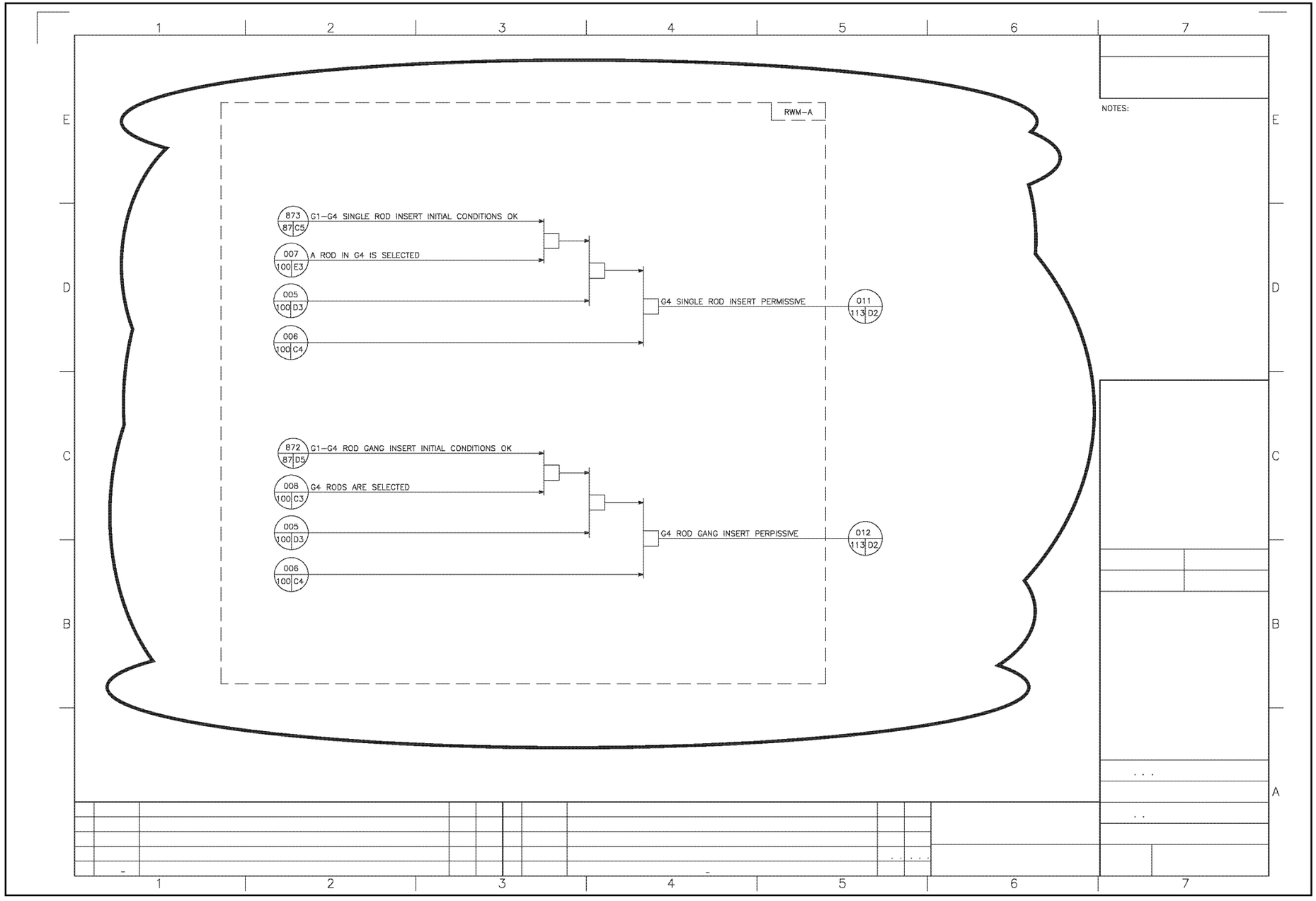

FIGURE 7.7-3 ROD CONTROL AND INFORMATION SYSTEM IBD (Sheet 101 of 114)

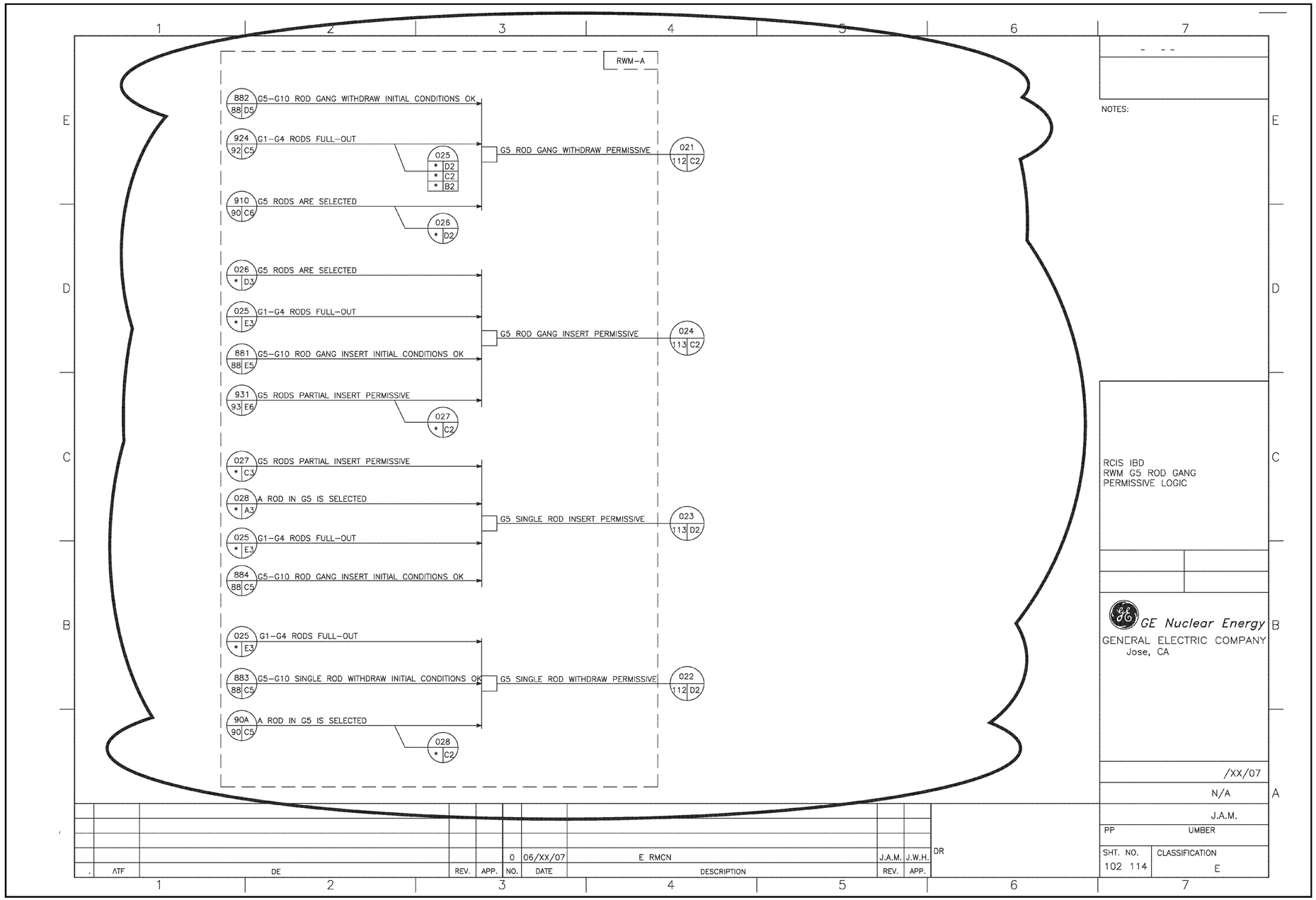

FIGURE 7.7-3 ROD CONTROL AND INFORMATION SYSTEM IBD (Sheet 102 of 114)

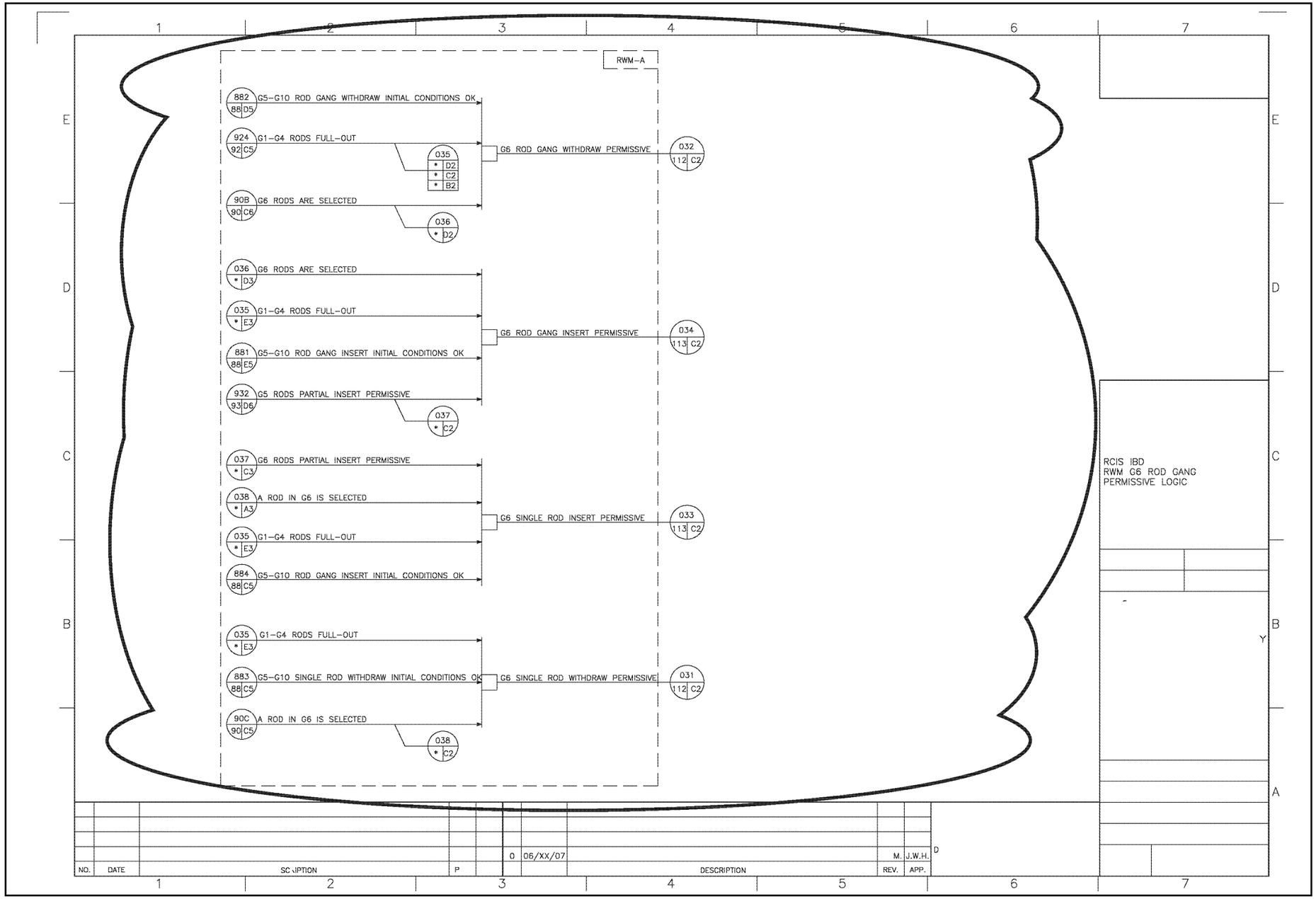

FIGURE 7.7-3 ROD CONTROL AND INFORMATION SYSTEM IBD (Sheet 103 of 114)

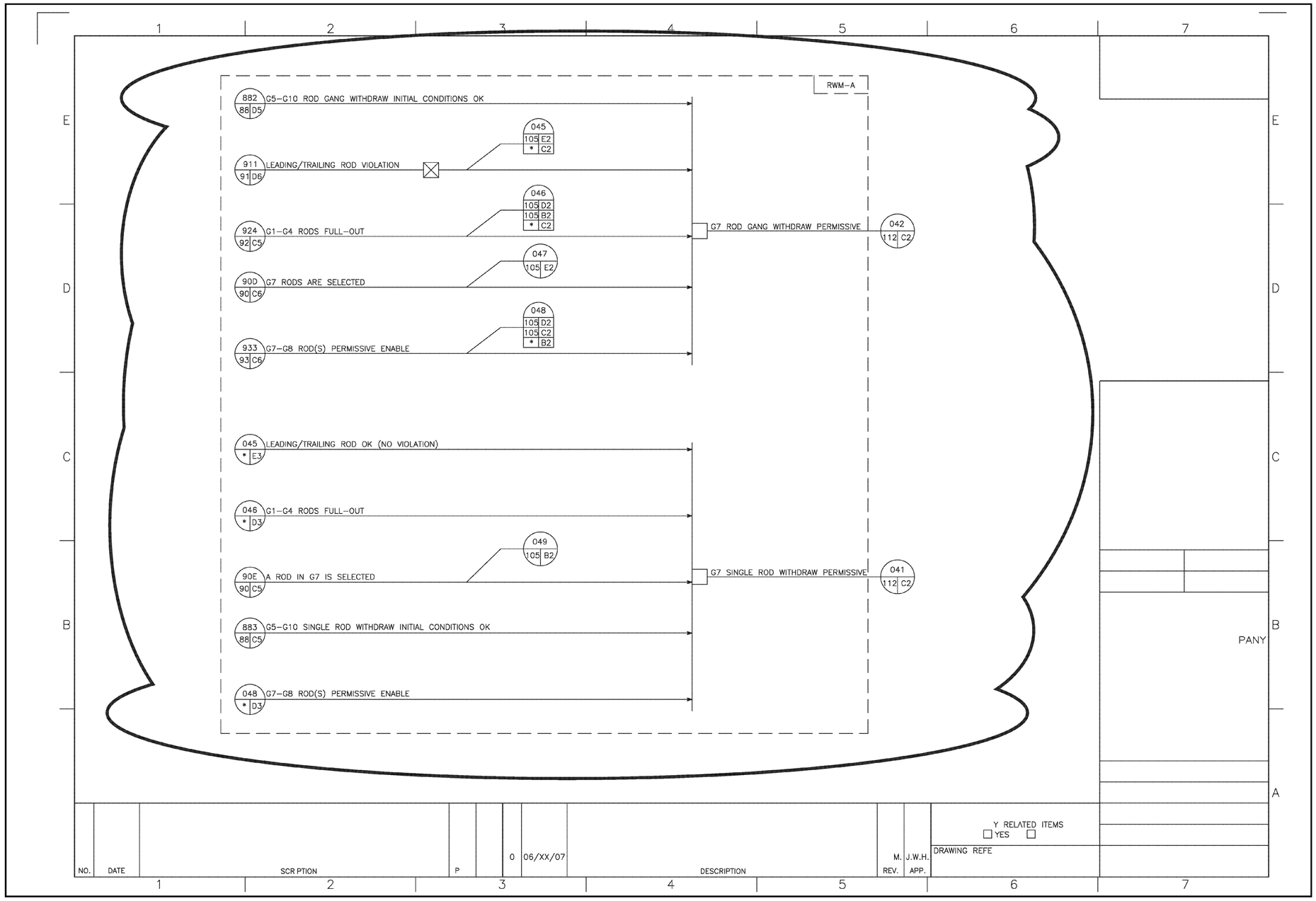

FIGURE 7.7-3 ROD CONTROL AND INFORMATION SYSTEM IBD (Sheet 104 of 114)

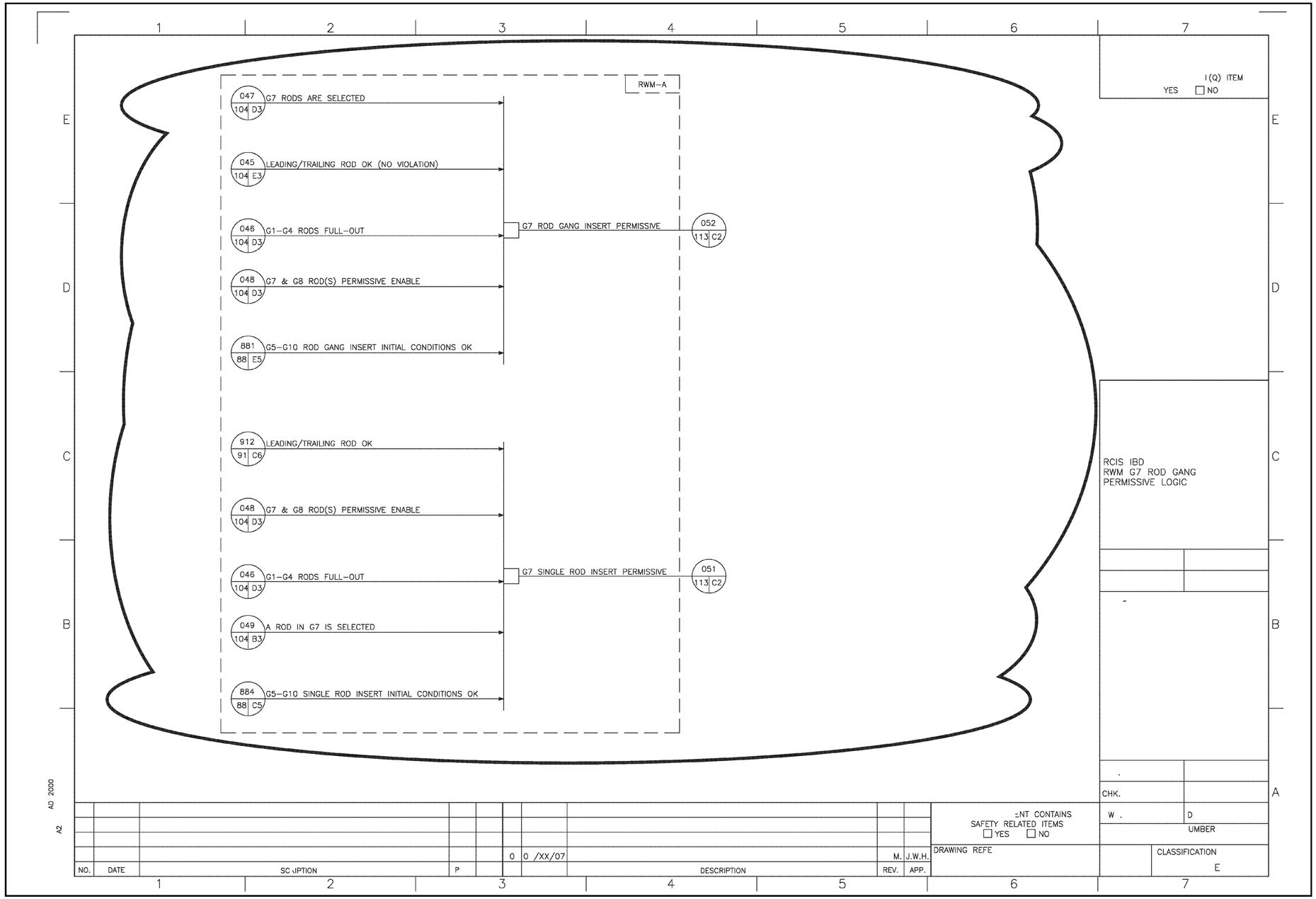

FIGURE 7.7-3 ROD CONTROL AND INFORMATION SYSTEM IBD (Sheet 105 of 114)

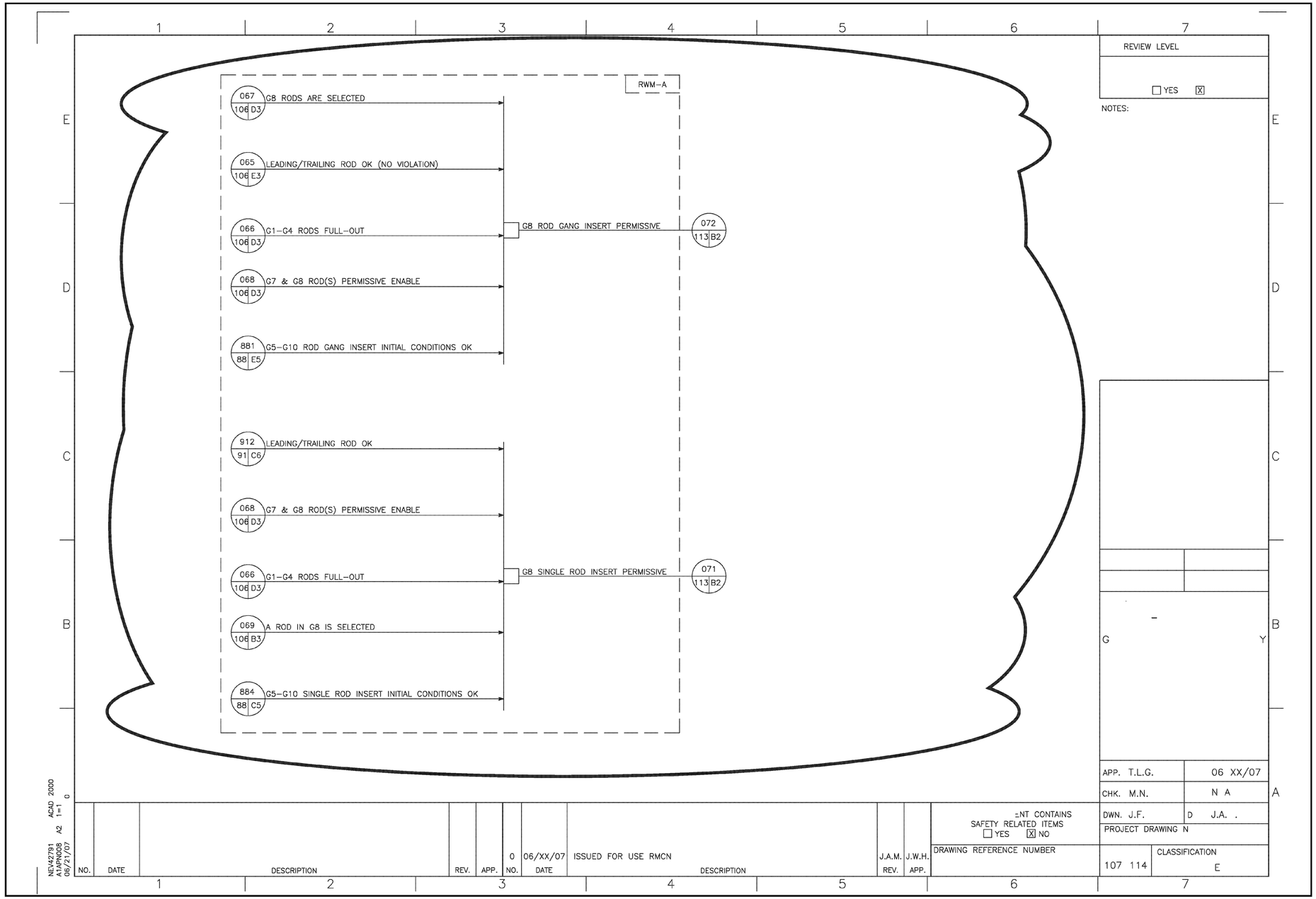

FIGURE 7.7-3 ROD CONTROL AND INFORMATION SYSTEM IBD (Sheet 107 of 114)

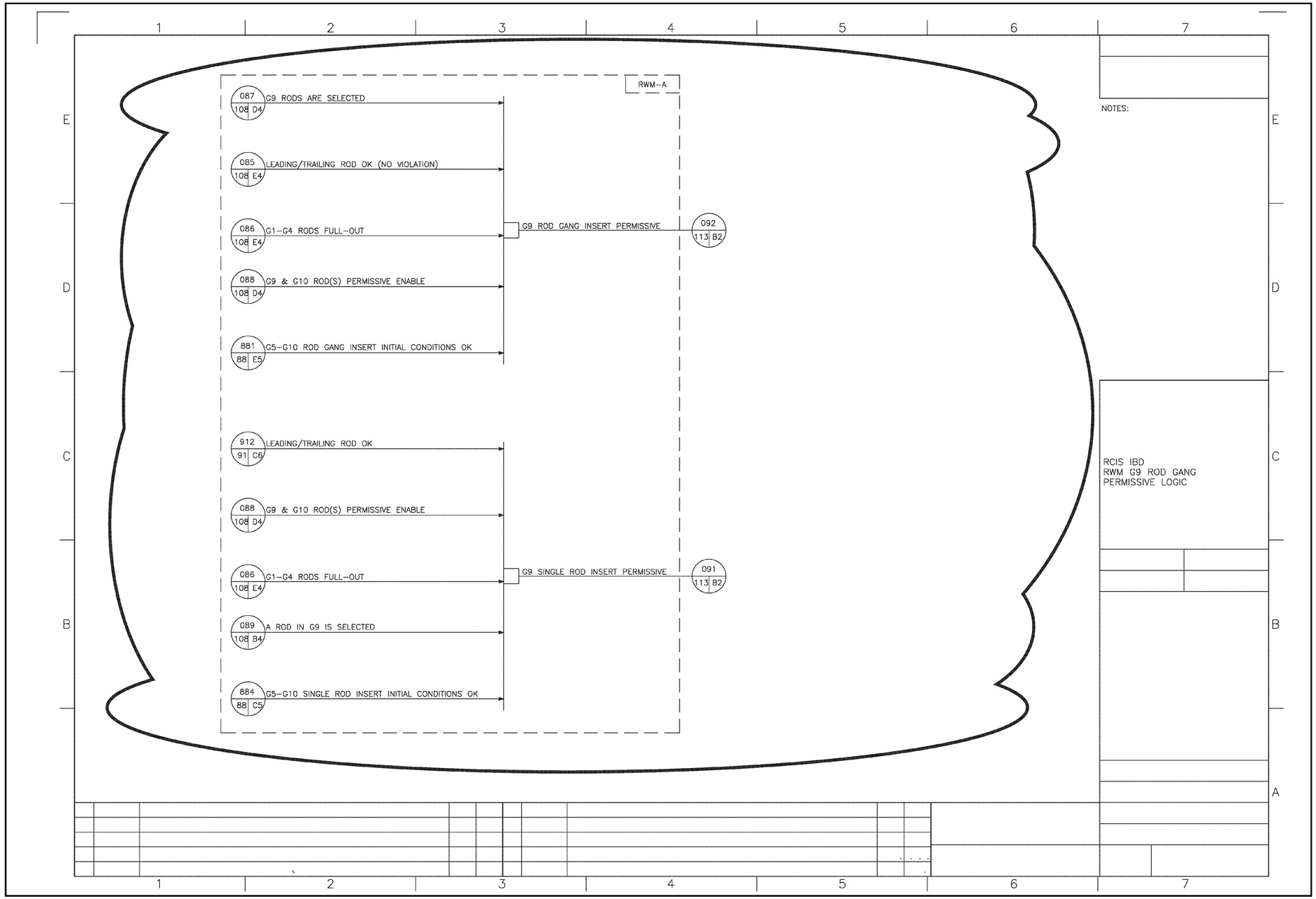

FIGURE 7.7-3 ROD CONTROL AND INFORMATION SYSTEM IBD (Sheet 109 of 114)

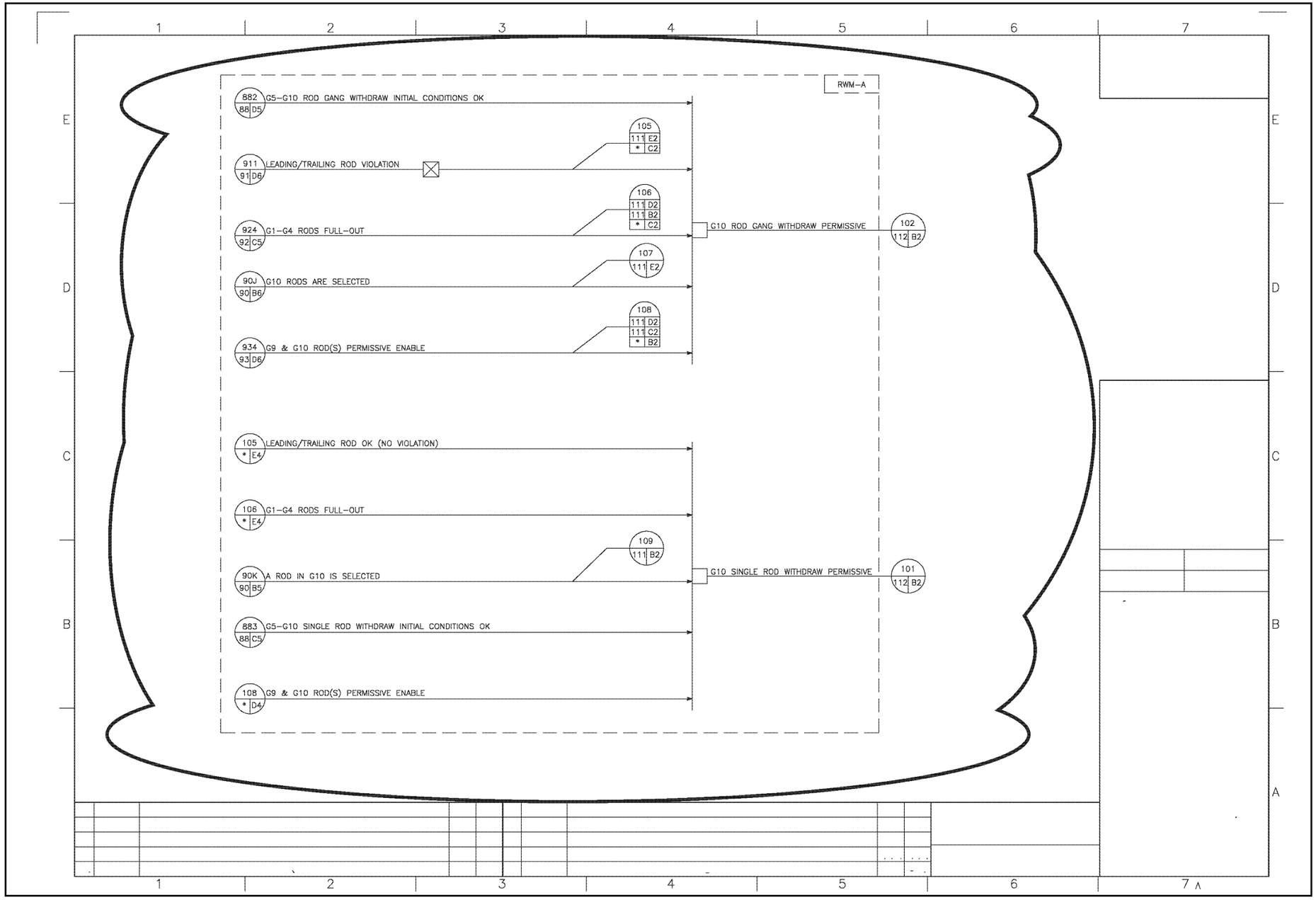

FIGURE 7.7-3 ROD CONTROL AND INFORMATION SYSTEM IBD (Sheet 110 of 114)

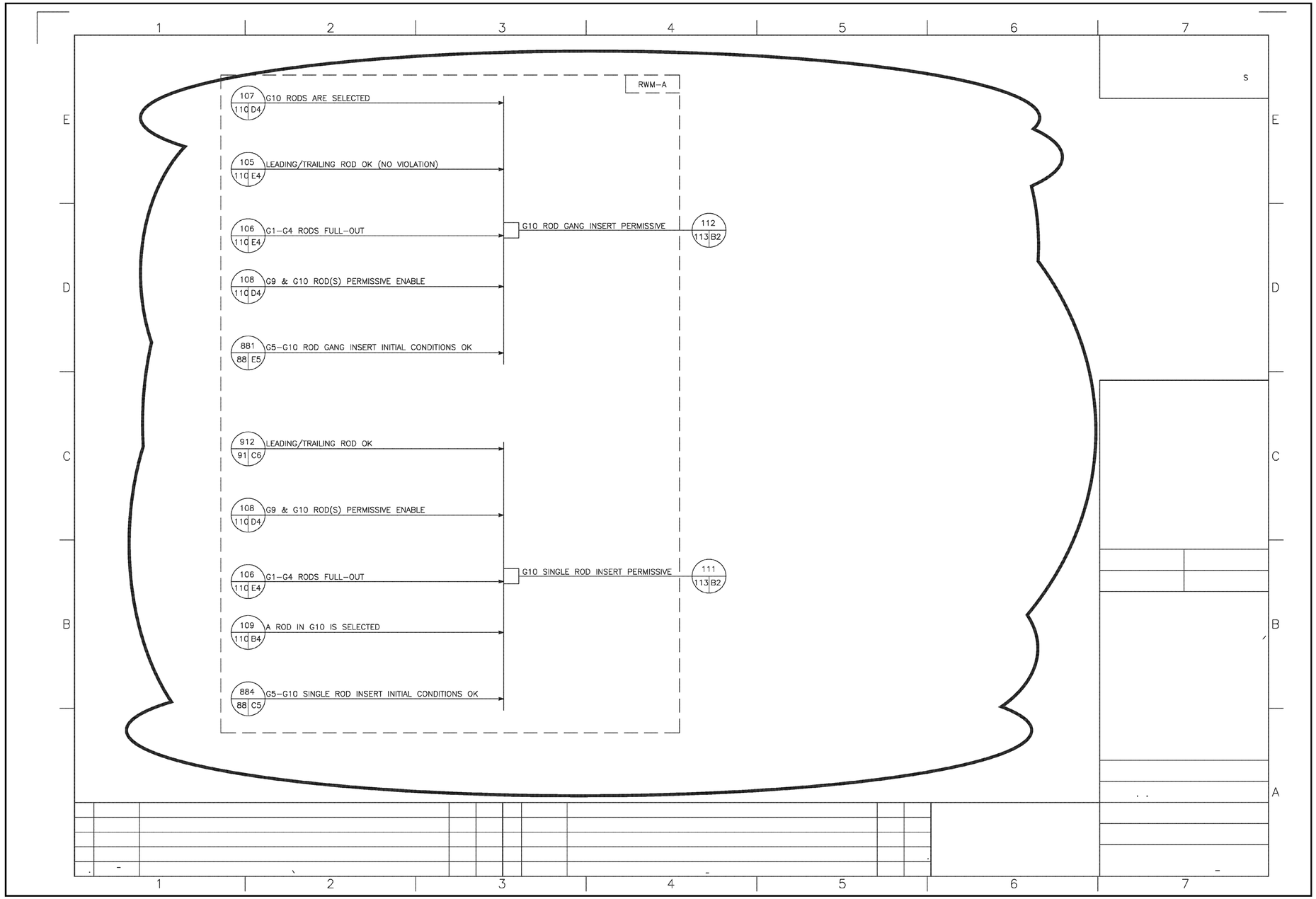

FIGURE 7.7-3 ROD CONTROL AND INFORMATION SYSTEM IBD (Sheet 111 of 114)

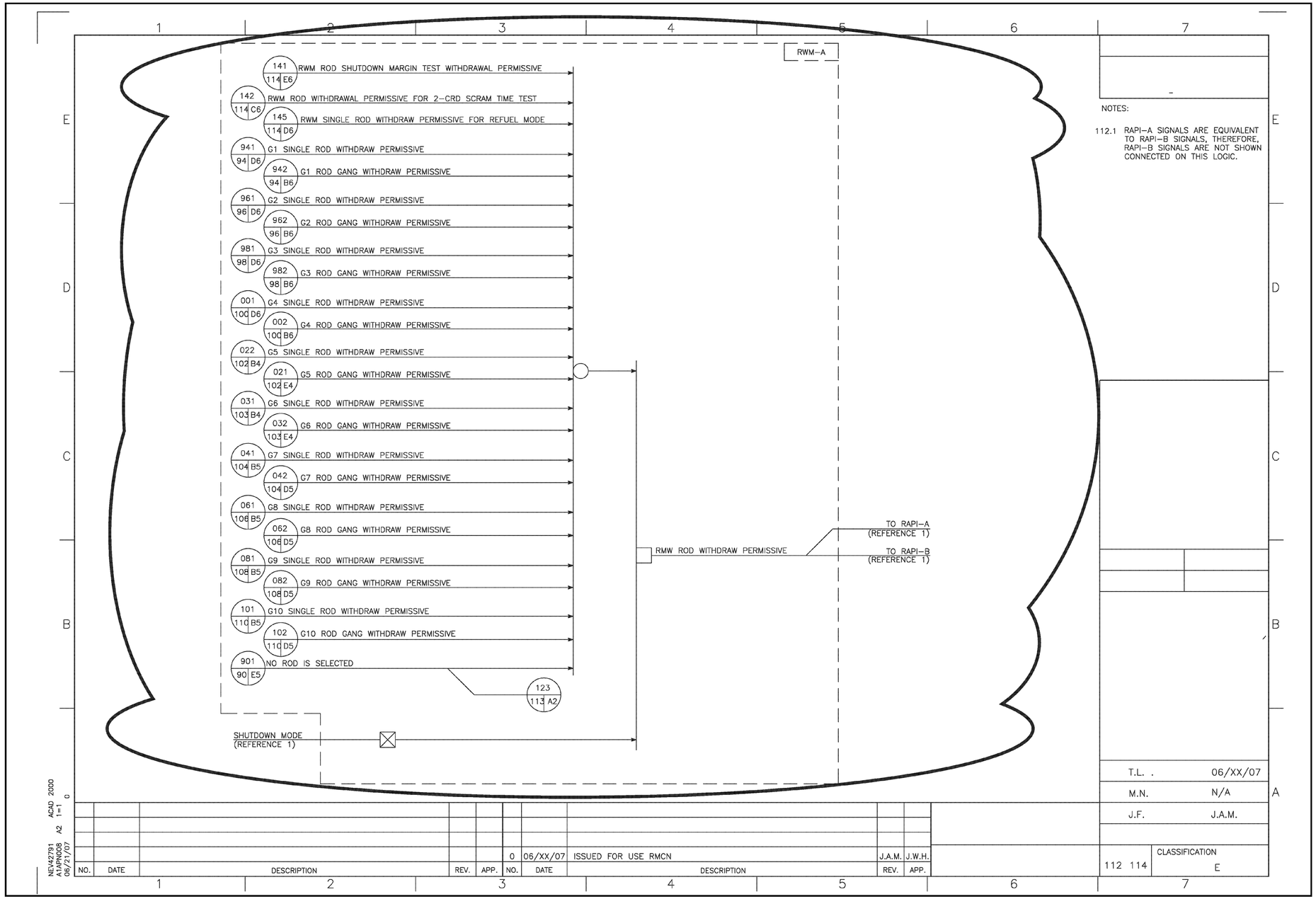

FIGURE 7.7-3 ROD CONTROL AND INFORMATION SYSTEM IBD (Sheet 112 of 114)

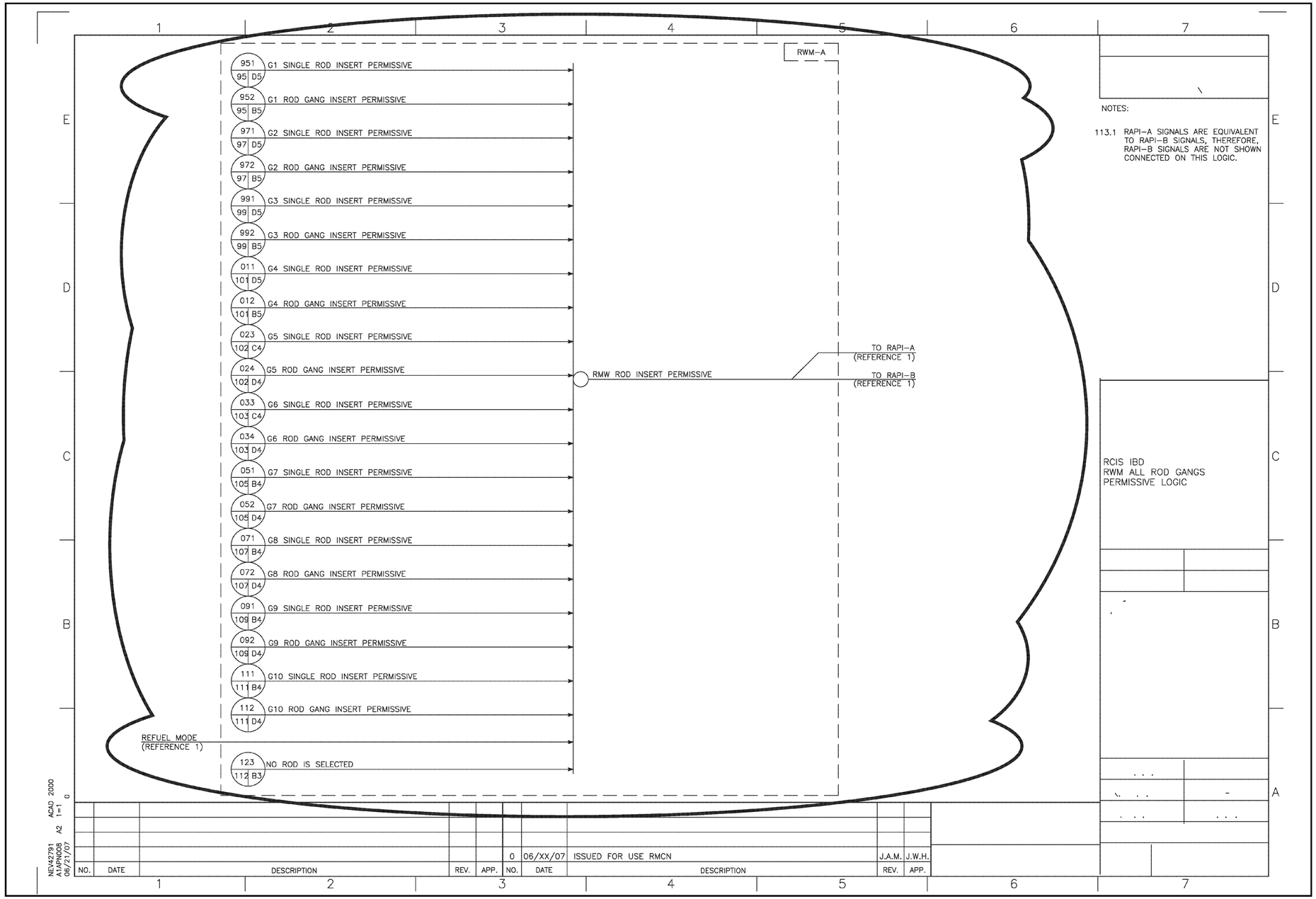

FIGURE 7.7-3 ROD CONTROL AND INFORMATION SYSTEM IBD (Sheet 113 of 114)

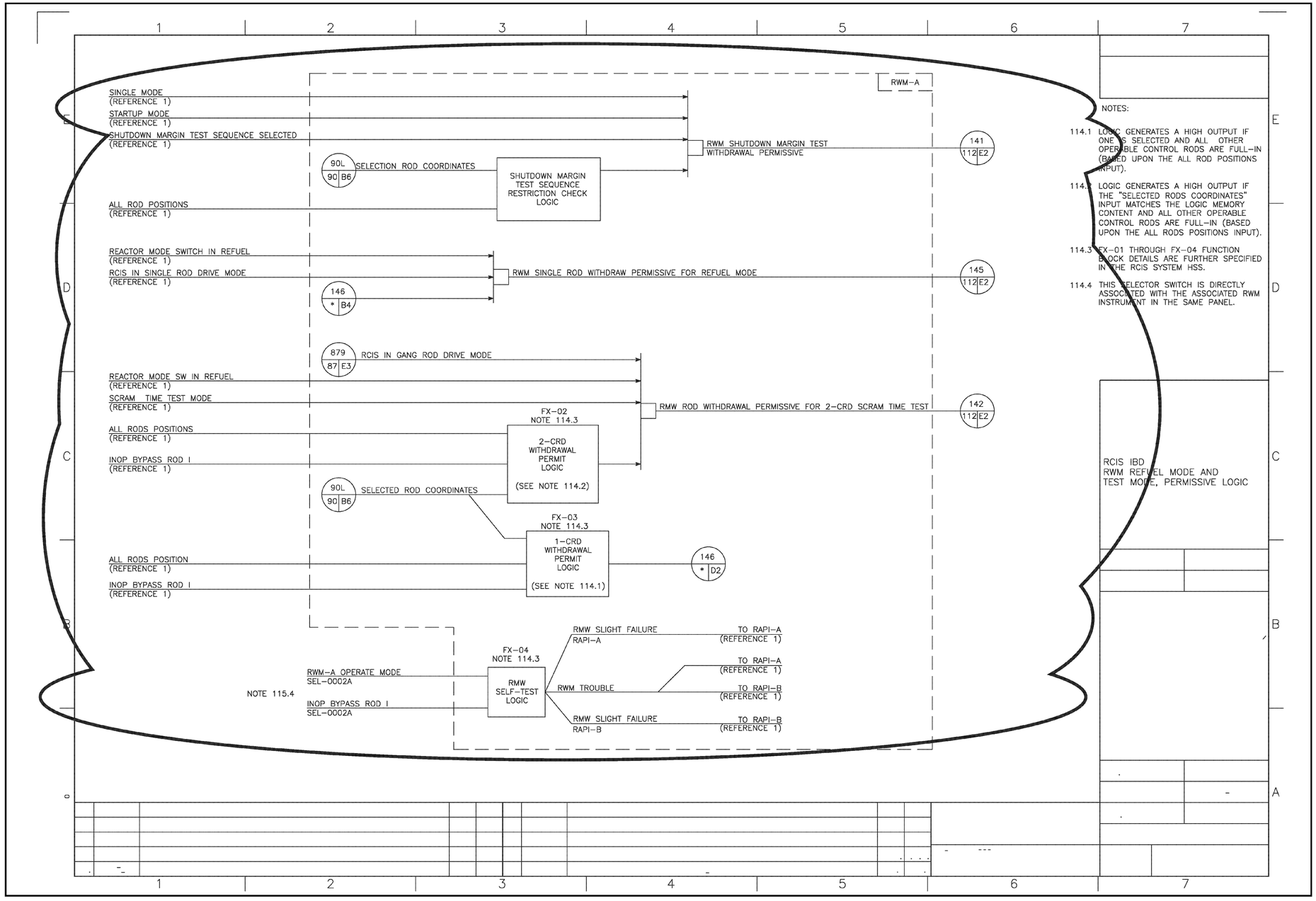

FIGURE 7.7-3 ROD CONTROL AND INFORMATION SYSTEM IBD (Sheet 114 of 114)

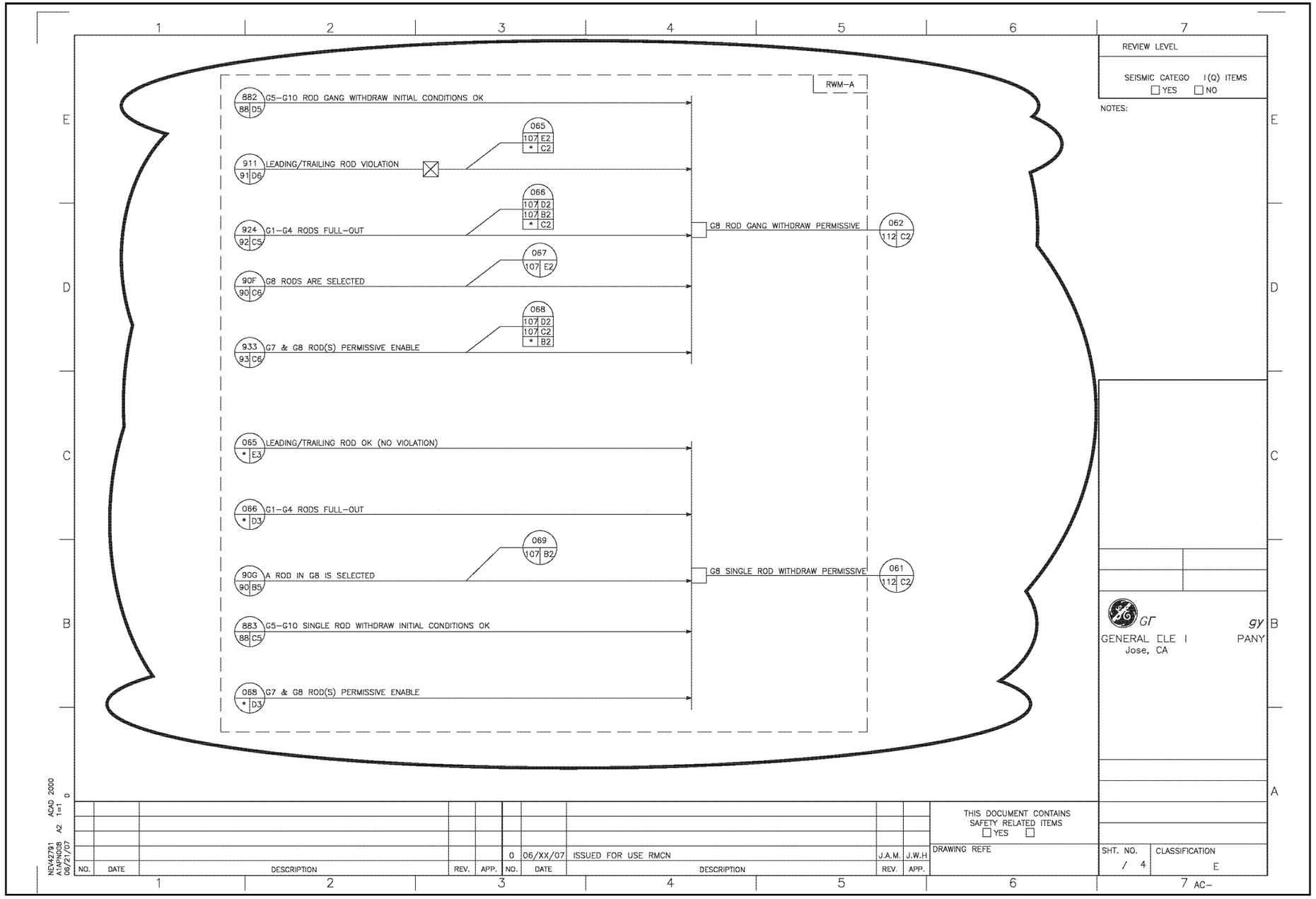

FIGURE 7.7-3 ROD CONTROL AND INFORMATION SYSTEM IBD (Sheet 106 of 114)

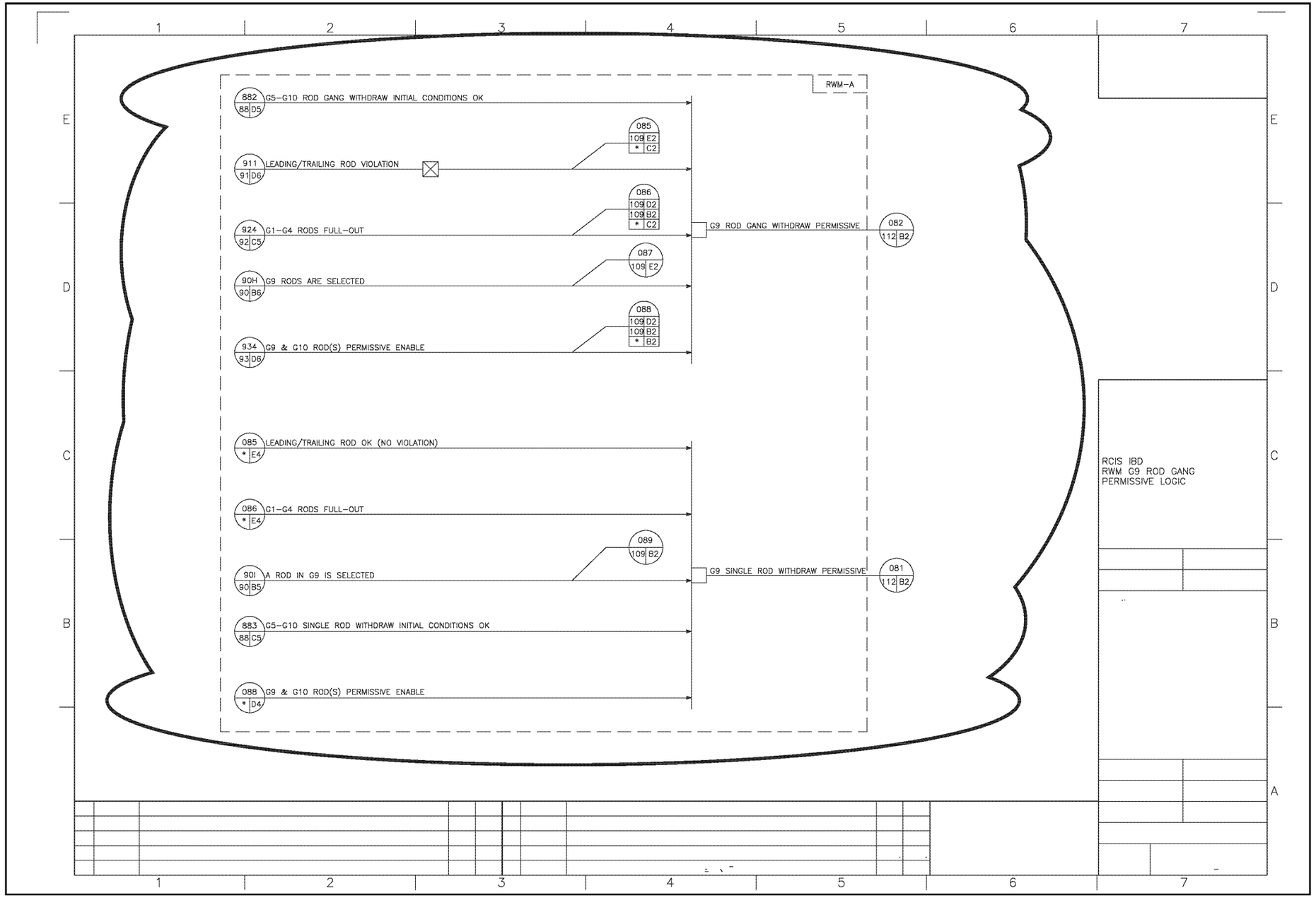

FIGURE 7.7-3 ROD CONTROL AND INFORMATION SYSTEM IBD (Sheet 108 of 114)