TN-RAM

Certificate of Compliance Revision
Pre-application Meeting with NRC

September 25, 2007

TN-RAM C of C Revision

AGENDA

1. Introduction
2. Overview of the TN-RAM Transport Package
3. Scope of Revision
4. Discussion of Changes to the SAR
5. Plans and Schedule

TN-RAM Introduction

- *Licensed in 1989 as a Type B(U) cask*
- *Currently operating under C of C No. 9233, Rev 8*
  - *Expires in 2010*
- *Single cask fabricated in 1990*
  - *Has been in continual use since*

TN-RAM on Trailer

TN-RAM Dimensions and Weights

Dimensions

	Length	Diameter
Outer Dimensions (with limiters)	178”	92”
Outer Dimensions (w/o limiters)	129”	51”
Cavity Dimensions	111”	35”

Weights

- Maximum gross weight 80,000 lbs
- Maximum payload 9,500 lbs

TN-RAM Payload

- *Typical payloads include control rod blades, LPRMs, fuel channels and BPRAs.*
- *Considered to be dry irradiated and contaminated non fuel bearing solids in secondary containers.*
- *Payload Activity*
  - *Licensed for 2000 A_2 (for Co^{60} = 14,000 curies)*
  - *Total heat load of 300 Watts*

Scope of C of C Revision

- *Update to requirements of B(U)-96*
- *Design changes*

Changes to Meet -96 Requirements

- *Immersion pressure increase from 21.0 to 21.7 psig*
- *Addition of insolation to post-fire ambient condition*
- *Change Co^{60} A_2 from 7 to 11*
- *Add required information to cask nameplate*

Design Changes

- **Addition of optional two-piece lid**
  - **Current lid has integral lead shield plug**

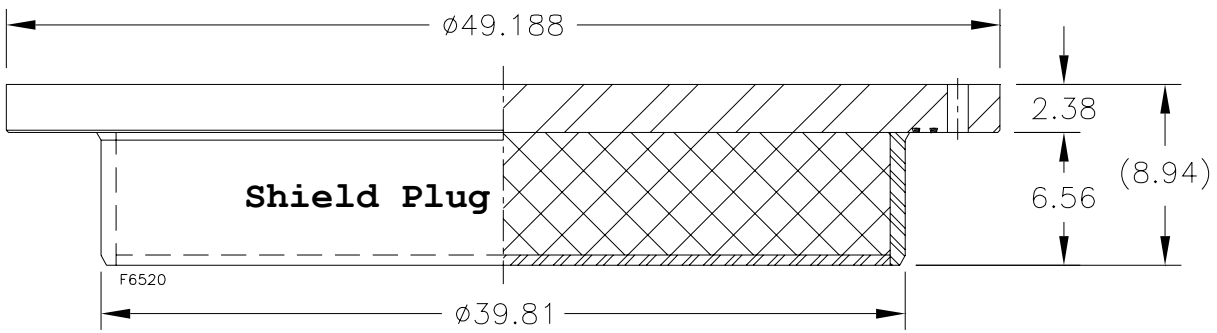

Design Changes (cont.)

- *Optional design separates lid from shield plug*

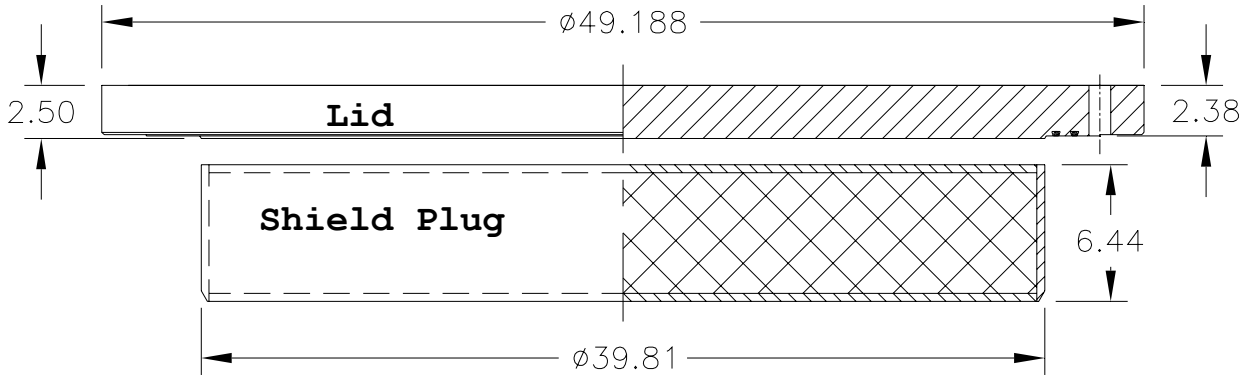

Design Changes (cont.)

- **Addition of "one piece" trunnion as an option**

Present Trunnion

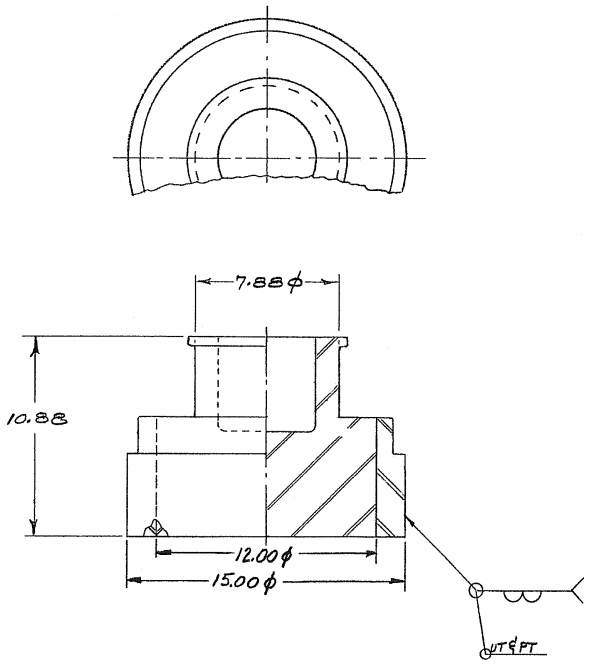

Optional Trunnion

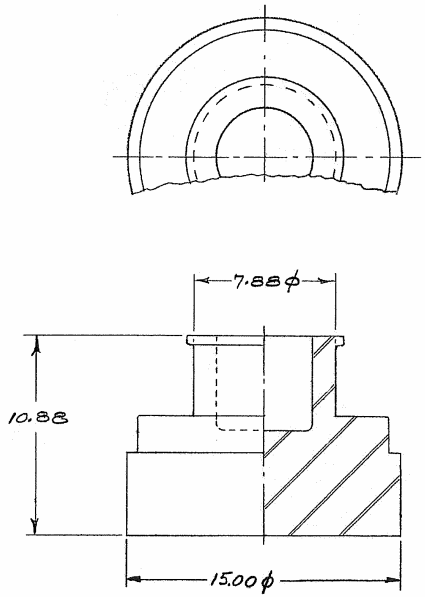

SAR Revision Summary

Structural changes

- **New optional lid design will require structural analysis of the lid and lid bolts**
  - **Lid bolt analysis using NUREG/CR 6007.**
  - **Optional lid design shown to be stronger than original design through use of higher strength (XM-19 steel) material. Therefore original lid structural analyses are bounding.**
  - **Optional one-piece trunnion requires no analyses for structural or any other disciplines (fabrication option only).**
  - **Immersion pressure increase small enough that no reanalysis is required.**

SAR Revision Summary (cont.)

- ***Thermal changes***
  - ***HAC Fire Analysis revised to reflect post-fire insolation. Increases seal temperature by 28°F to 249°F but is still well below the 437°F seal limit.***
  - ***Optional lid has negligible impact on existing thermal analyses.***

SAR Revision Summary (cont.)

- ***Nuclear changes***
  - ***Change in A_2 accommodated by decreasing the payload limit from 2,000 A_2 to 1,272 A_2. No changes to the design basis source term of 14,000 Curies of Co^{60}.***
  - ***Existing containment analysis bounding because the change in A_2 value results in a higher allowable leak rate. TN will continue to use the lower original leak rate.***
  - ***Optional lid/shield plug configuration has 0.25" less lead thickness than original design. Original shielding analysis remains bounding because lead thickness of the bottom was used for the top dose rates in the original analysis.***
- ***Operations changes***
  - ***Additional operations will be added to deal with installation and removal of separate shield plug.***

Project Schedule

- C of C Revision Application — 10 / 2007
- NRC Approval Requested by — 10 / 2008