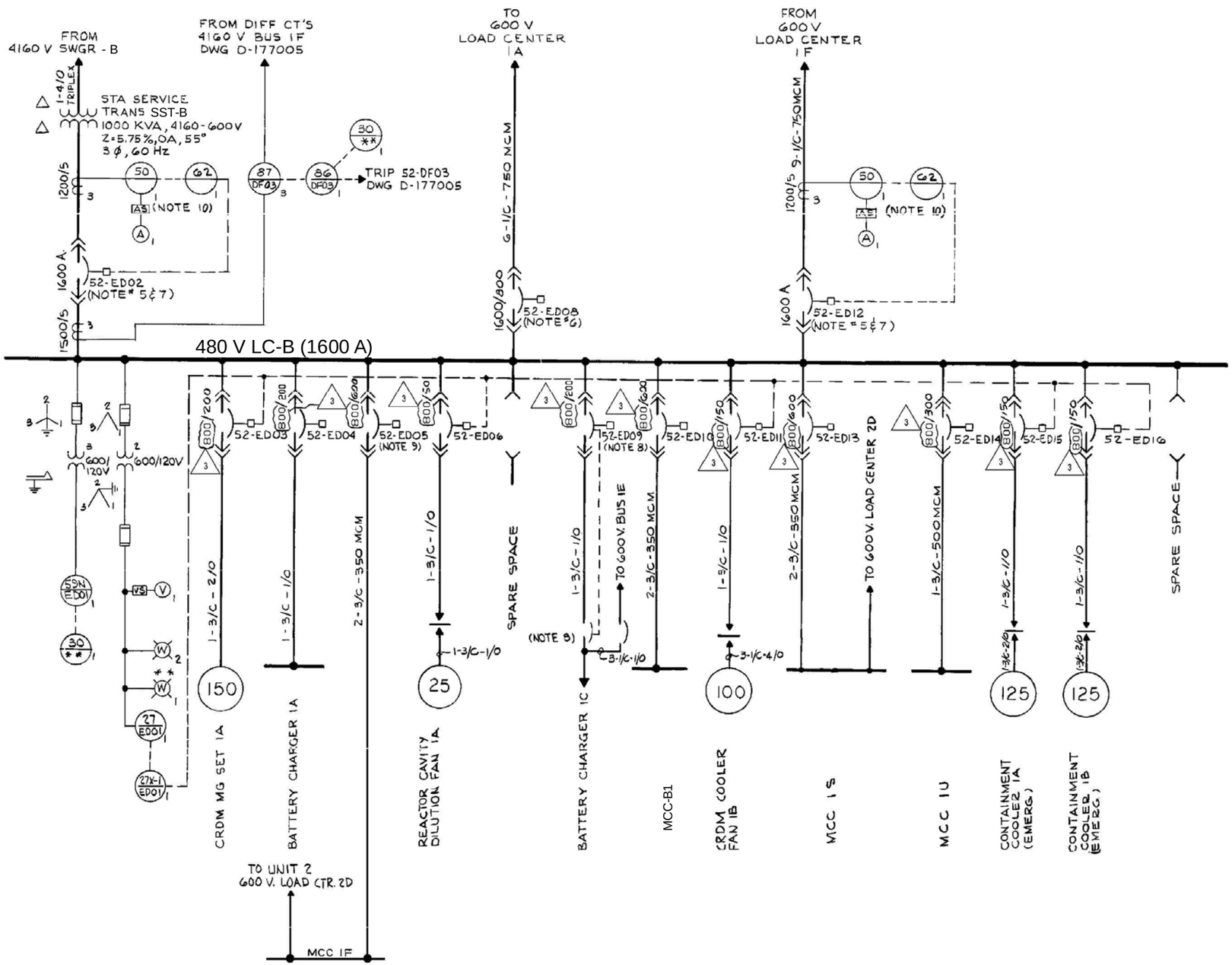

DEVICE	DESCRIPTION	MFR/TYPE	REMARKS
50 / NOTE 10	STA. SERVICE TRANSF. 1D OVER CURRENT RELAY, 3ϕ	GE/PJC32G	
62 / NOTE 10	TIME DELAY RELAY	AGASTAT/ E7012PA	
50 / NOTE 10	OVER CURRENT RELAY, 3ϕ, FOR INC FDR FROM LOAD CTR 1F	GE/PJC32G	
62 / NOTE 10	TIME DELAY RELAY	AGASTAT/ E7012PA	
87 / DF03	STA. SERVICE TRANSF. 1D DIFFERENTIAL RELAY	GE/12STD15C5A	
86 / DF03	STA. SERVICE TRANSF. 1D LOCKING OUT RELAY	G.E/HEA	
59N / ED01	BUS 1D OVER VOLTAGE RELAY (GROUND DETECTION)	WEST/CV-8	
27 / ED01	BUS 1D UNDER VOLTAGE RELAY	WEST/CV-2	
27X-1 / ED01	BUS 1D UNDER VOLTAGE AUXILIARY RELAY.	WEST/MG-6	

NOTES

1. ** - DENOTES EMERG. POWER BOARD IN MAIN CONT. RM.
2. INTERRUPTING RATING OF ACB'S IS 22,000 AMPS RMS SYMMETRICAL (MIN)
3. BUS SHORT CIRCUIT RATING 22,000 AMPS SYMMETRICAL.
4. STATION SERVICE TRANSFORMER "ASKAREL" TYPE.
5. BREAKERS 52-ED02 AND 52-ED12 ARE KEY INTERLOCKED SO THAT ONLY ONE CAN BE CLOSED AT ANY TIME (DWG. B-177125)
6. BREAKERS 52-ED08 AND 52-EA09 (ON 600V. BUS 1A) ARE OPERATED BY A SINGLE CONTROL SWITCH IN THE MAIN CONTROL ROOM.
7. ALL BKR'S EXCEPT 52-ED02 & 52-ED12 HAVE SOLID STATE TRIP UNITS WITH FOLLOWING DESIGNATIONS (BREAKER FRAME/SENSOR RATING - AMPERES)
8. BREAKERS 52-ED09, 52-EE06 AND MOLDED CASE BKRS. TO BATTERY CHARGER 1C ARE KEY INTERLOCKED SO THAT ONLY ONE BREAKER AND CORRESPONDING MOLDED CASE BKRS CAN BE CLOSED AT ANY TIME (DWG-C-177133).
9. UNIT 1 BREAKER ED06 IS ELECTRICALLY INTERLOCKED WITH UNIT 2 BREAKER ED06 TO PREVENT SIMULTANEOUS CLOSING OF BOTH BREAKERS.
10. LOCATED IN TERMINAL BLOCK COMPARTMENT ABOVE ASSOCIATED BREAKER.
11. THIS DRAWING SUPERSEDES DRAWING C-177010, SHT 1 OF 1. REV. 14, DATED 11-15-90, PER PCN S-93-1-8690, REV. 0.

REFERENCE DRAWINGS

A-177538 - ELECTRICAL GENERAL DETAILS & NOTES
D-177001 - SINGLE LINE ELEC. AUX. SYSTEM (4160 & 600V)

SNPP	Drawing No.: LC-B-01
LOAD CENTER B (LC-B) ONE-LINE DIAGRAM	Date: 05/20/2007
	Revision No.: #6

DEVICE	DESCRIPTION	MFR/TYPE	REMARKS
62	TIME DELAY PICK-UP RELAY	AGA/E7012PA	125V DC 0.1 TO 1.0 SEC

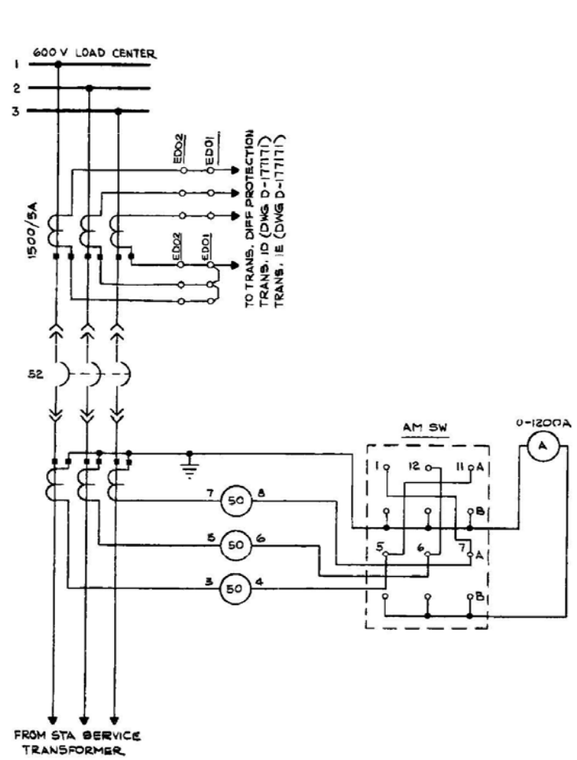

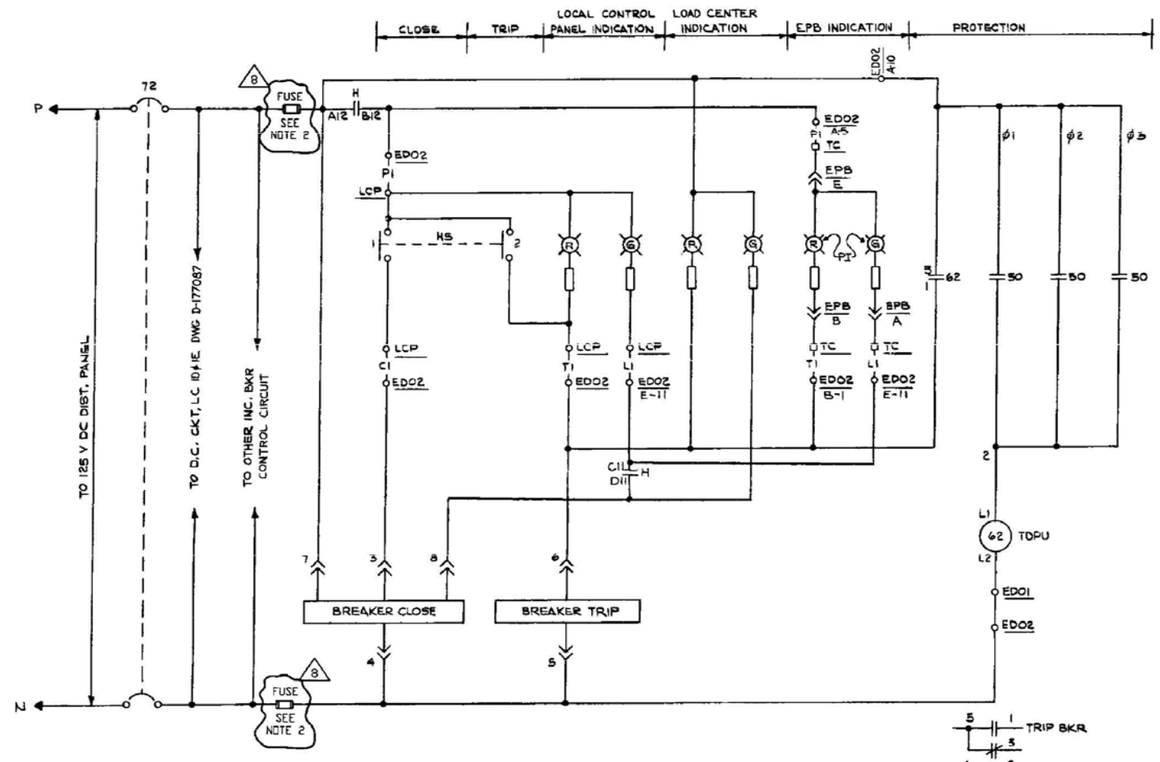

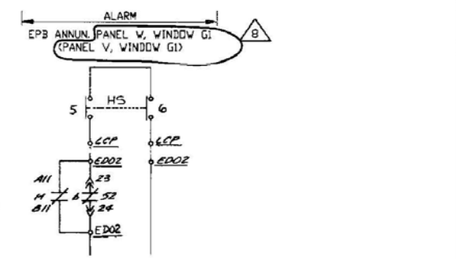

NOTES:

1. H-TRUCK OPERATED CELL SWITCH SHOWN FOR BREAKER IN TEST POSITION.
2. REFER TO FUSE MANUAL A-181987 FOR FUSE RATING AND TYPE.

REFERENCE DRAWINGS

D-177001 - SINGLE LINE, ELECTRICAL AUXILIARY SYSTEM.(EMERG.-460V & 600V)

A-177538 - ELECTRICAL GENERAL DETAILS AND NOTES.

D-177010 SINGLE LINE PROTECTION AND METERING 600V LOAD CENTER 1D (EMERGENCY)

D-177011 SINGLE LINE PROTECTION AND METERING 600V LOAD CENTER 1E (EMERGENCY)

AMMETER

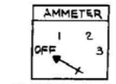

AMMETER SWITCH
(W) TYPE W-2
S# 787A976G01
ROUND FIXED HANDLE

CONTACT	POSITION								
	0	-	1	-	-	2	-	-	5
A11-B11	X	X		X	X	X	X	X	X
A12-B12	X	X	X	X	X		X	X	X
A1-B1	X	X	X	X	X	X	X	X	
A5-B5		X	X	X					
A6-B6					X	X	X		
A7-B7								X	X

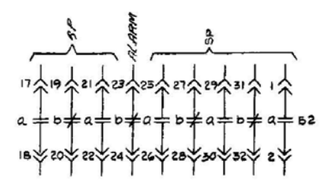

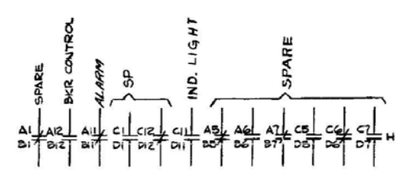

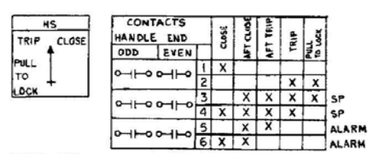

HANDSWITCH
GE SBM TYPE
MODEL NR 10AA116
SPRING RETURN TO CENTER
PULL TO LOCK IN TRIP POSITION

EQUIPMENT		FAC	SCHEME	LOAD CENT COMPT.	LCP LOCAL CONTROL PANEL	START UP NUMBER	EPB EMERGENCY POWER BOARD	TC TERMINATION CABINET	PI POSITION INDICATOR LIGHT
INCOMING BREAKER TO 600V LOAD CENTER	1D	1V	AE002	ED02	Q1H21 E009-A	5	Q3H1NG EPB2508-AB	Q1H25 L037-A	Q1R16 ZL2018BA-A
	1E	1V	BE002	EE02	Q1H21 E010-B	5	Q3H1NG EPB2508-AB	Q1H25 L039-B	Q1R16 ZL2018BA-B

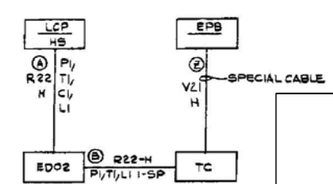

BLOCK DIAGRAM

SNPP

52-ED-02
BREAKER SCHEMATIC

Drawing No.: LC-B-02

Date: 05/20/2007

Revision No.: #6

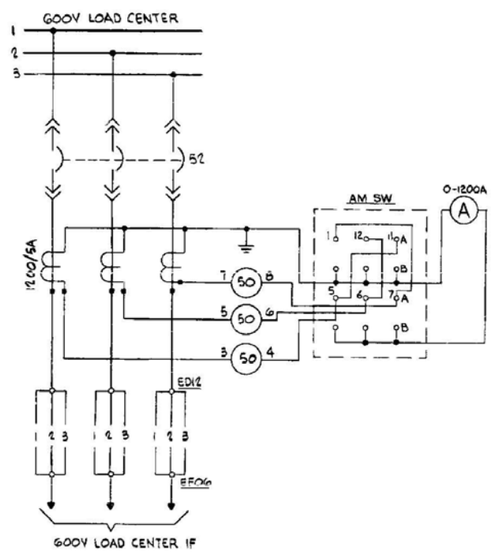

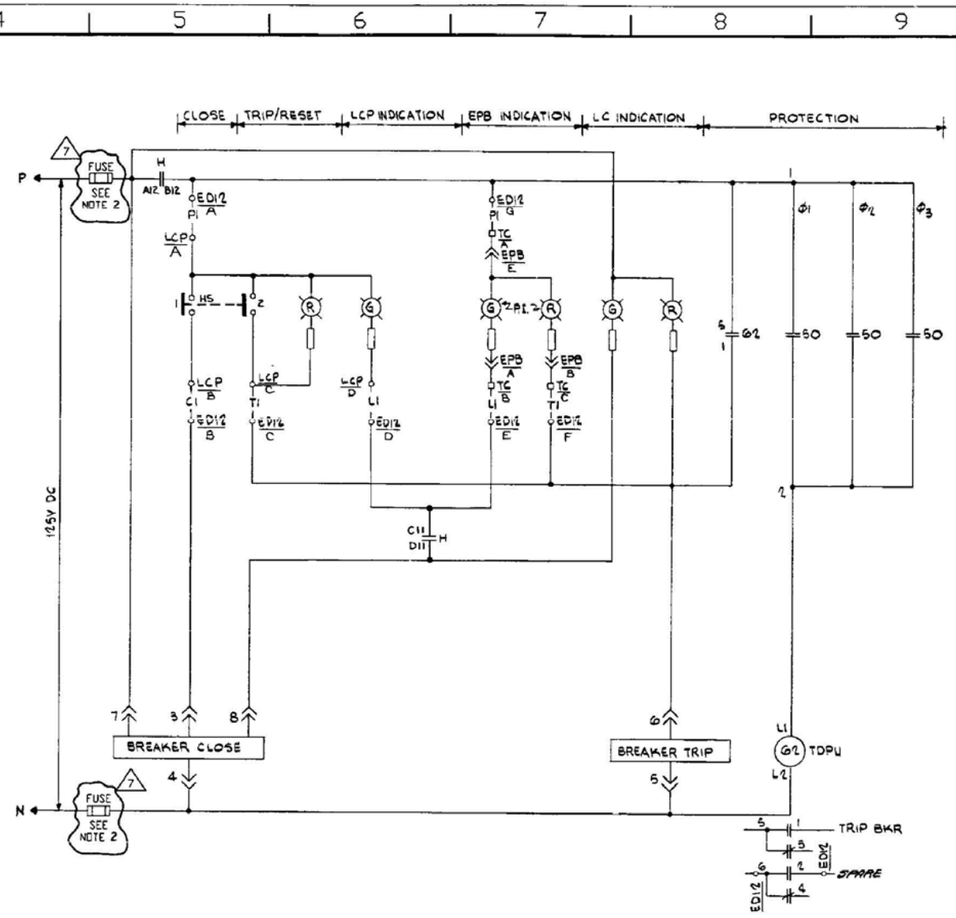

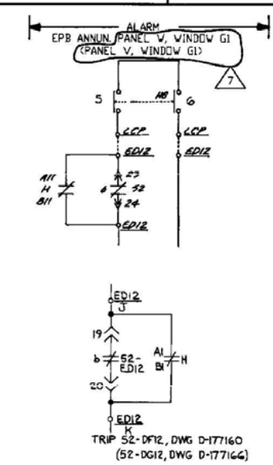

DEVICE	DESCRIPTION	MFR/TYPE	REMARKS
62	TIME DELAY PICK-UP RELAY	AGASTAT E7012PA	125V DC 0.1 TO 1.0 SEC

NOTES:

1. H-TRUCK OPERATED CELL SWITCH SHOWN FOR BREAKER IN TEST POSITION.
2. REFER TO FUSE MANUAL A-181987 FOR FUSE RATING AND TYPE.

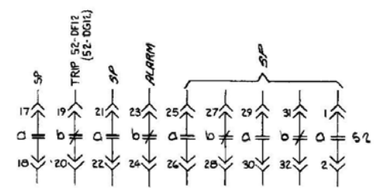

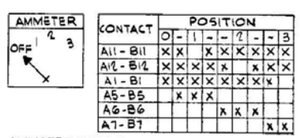

CONTACT	POSITION								
	O	-	1	-	-	2	-	-	3
A11 - B11	X	X		X	X	X	X	X	X
A12 - B12	X	X	X	X	X		X	X	X
A1 - B1	X	X	X	X	X	X	X	X	
A5 - B5		X	X	X					
A6 - B6					X	X	X		
A7 - B7								X	X

AMMETER SWITCH
(W) TYPE W-2, S# 787A976G01
ROUND FIXED HANDLE

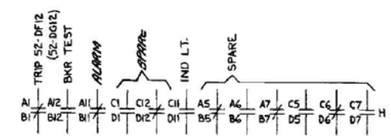

REFERENCE DRAWINGS

A-177538 – ELECTRICAL GENERAL DETAILS AND NOTES

D-177001 – SINGLE LINE ELECTRICAL AUX SYSTEM (EMERG – 4160V & 600V)

D-177010 – SINGLE LINE PROTECTION AND METERING 600V L.C. 1D (EMERG)

D-177011 – SINGLE LINE PROTECTION AND METERING 600V L.C. 1E (EMERG)

C-177012 – SINGLE LINE PROTECTION AND METERING 600V LOAD CENTER 1F

EQUIPMENT		FAC	SCHEME	L.C. COMPT.	LCP LOCAL CONTROL PANEL	EPB EMERG POWER BOARD	TC TERMINATION CABINET	PI POSITION IND. LIGHTS	START-UP NUMBER	L.C. COMPT
INCOMING 600V LOAD CENTER BREAKER	1D	IV	AED12	ED12	Q1H21 E009-A	Q5H11G EPB250B-AB	Q1H25 L037-A	Q1R16 ZL201BMA-A	5	EF06
	1E	IV	BEE12	EE12	Q1H21 E010-B	Q5H11G EPB250B-AB	Q1H25 L039-B	Q1R16 ZL201BMA-B	5	EF08

LOAD CENTER COMPARTMENT	TERMINAL BLOCK NUMBERS									
	A	B	C	D	E	F	G	H	I	J	K
ED12	A-5	A-7	B-1	E-11	E-11	B-2	A-6	B-5	B-4	C-11	C-12
EE12	A-5	A-7	B-1	E-11	E-11	B-2	A-4	B-5	B-4	C-11	C-12

LOCAL CONTROL PNL	TERMINAL BLOCK NUMBERS			
	A	B	C	D
ED12	TB7-9	TB7-11	TB7-14	TB7-12
EE12	TB10-5	TB10-6	TB10-7	TB10-8

TERMINATION CABINET	TERMINAL BLOCK NUMBERS		
	A	B	C
Q1H25L037-A	1TB2-38	1TB2-36	1TB2-37
Q1H25L039-B	3TB1-33	3TB1-31	3TB1-32

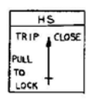

CONTACTS HANDLE END ODD	EVEN		CLOSE	AFT CLOSE	AFT TRIP	TRIP	PULL TO LOCK	
		1	X					
		2				X	X	
		3		X	X	X	X	SP
		4	X	X	X	X		SP
		5		X	X			ALARM
		6	X	X				ALARM

HANDSWITCH
GE SBM TYPE
MODEL Nº 10AA116
SPRING RETURN TO CENTER
PULL TO LOCK IN TRIP POSITION.

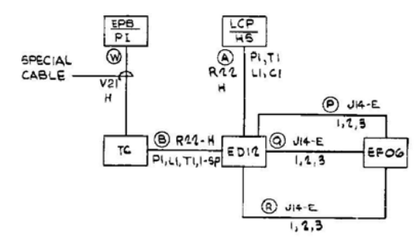

BLOCK DIAGRAM

SNPP	Drawing No.: LC-B-03
52-ED-12 SCHEMATIC	Date: 05/20/2007
	Revision No.: #6

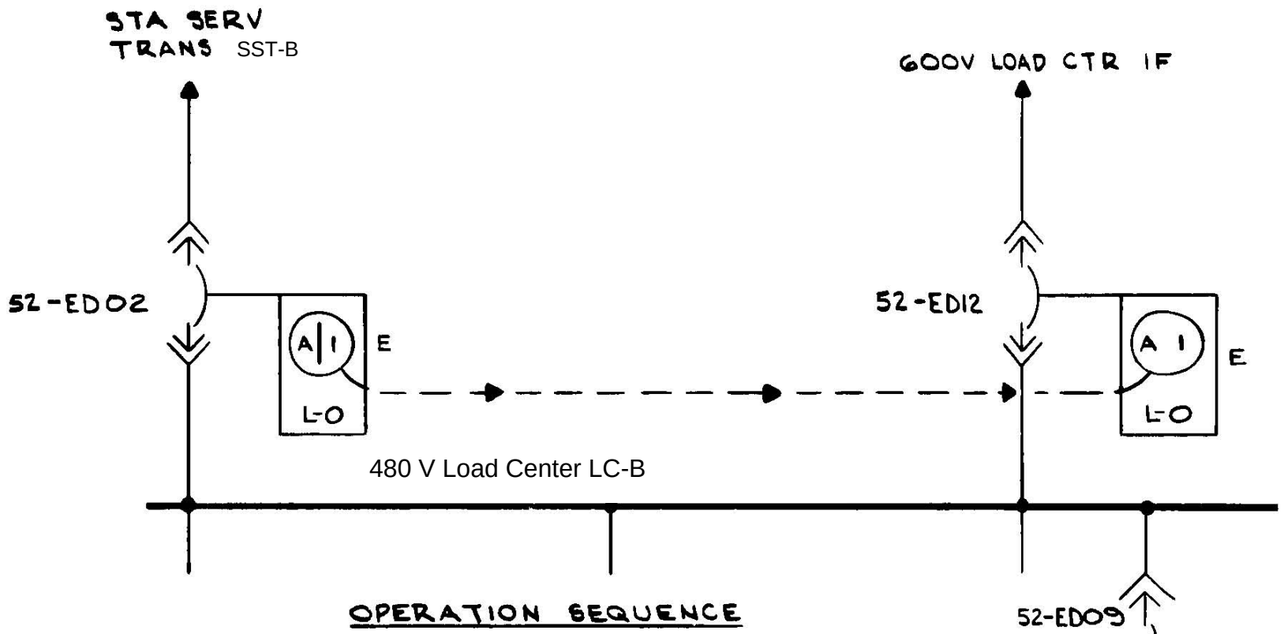

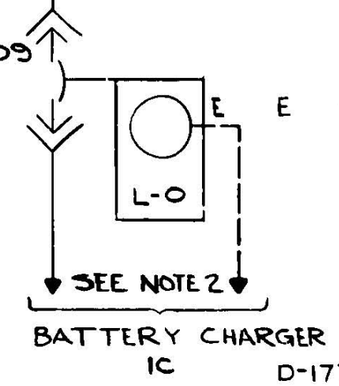

NOTES

1. ALL INTERLOCKS ARE KIRK TYPE
2. CIRCUIT BREAKERS 52-ED09, 52-EE06 & MOLDED CASE BREAKERS TO BATTERY CHARGER 1C ARE KEY INTERLOCKED SO THAT ONLY ONE BREAKER AND CORRESPONDING BATTERY CHARGER MOLDED CASE BREAKER CAN BE CLOSED AT ANY TIME (SEE DWG C-177133)

LEGEND

A1 L-O — INTERLOCK WITH KEY HELD.

A1 L-O — INTERLOCK WITH KEY REMOVED.

L-O — (LOCKED OPEN) INDICATES THAT THE KEY IS REMOVABLE WHEN THE CIRCUIT BREAKER IS LOCKED IN THE OPEN POSITION.

E — INDICATES KEY REMOVABLE ONLY WHEN BOLT EXTENDED.

INTERLOCK KEY TABLE

INTERLOCK	KEY NUMBER
A1	RE-14204

OPERATION SEQUENCE

KEY IS HELD IN CIRCUIT BREAKER 52-ED02 INTERLOCK.

TO ESTABLISH SERVICE THROUGH CIRCUIT BREAKER 52-ED12

1. TRIP CIRCUIT BREAKER 52-ED02
2. TURN KEY A1 IN L-O INTERLOCK ON CIRCUIT BREAKER 52-ED02 TO LOCK OPEN. KEY A1 IS NOW FREE.
3. INSERT KEY A1 IN L-O INTERLOCK ON CIRCUIT BREAKER 52-ED12 AND TURN TO UNLOCK. KEY A1 IS NOW HELD.
4. CLOSE CIRCUIT BREAKER 52-ED12.

REVERSE SEQUENCE TO RESTORE SERVICE THROUGH CIRCUIT BREAKER 52-ED02.

NOTE: AS AN EXCEPTION FOR MAINTENANCE WORK PER A PLANT PROCEDURE, TWO KEYS MAY BE USED TO OVERRIDE THE NORMAL CIRCUIT BREAKER INTERLOCK FEATURE. 4

REFERENCE DWG.

D-177001 - SINGLE LINE ELEC AUX SYSTEM (4160V & 600V)

C-177010 - SINGLE LINE PROTECTION & METERING 600V LOAD CENTER 1D

A-177538 - ELEC GEN DETAILS & NOTES

SNPP	Drawing No.: LC-B-04
LC-B INCOMING BREAKER INTERLOCKS	Date: 05/20/2007
	Revision No.: #6

DEVICE	DESCRIPTION	MFR / TYPE	REMARKS
27X-1	UNDERVOLTAGE AUXILIARY RELAY	(W)/MG-G	125V DC
27X-2	UNDERVOLTAGE AUXILIARY RELAY	GE/HFA	125V DC

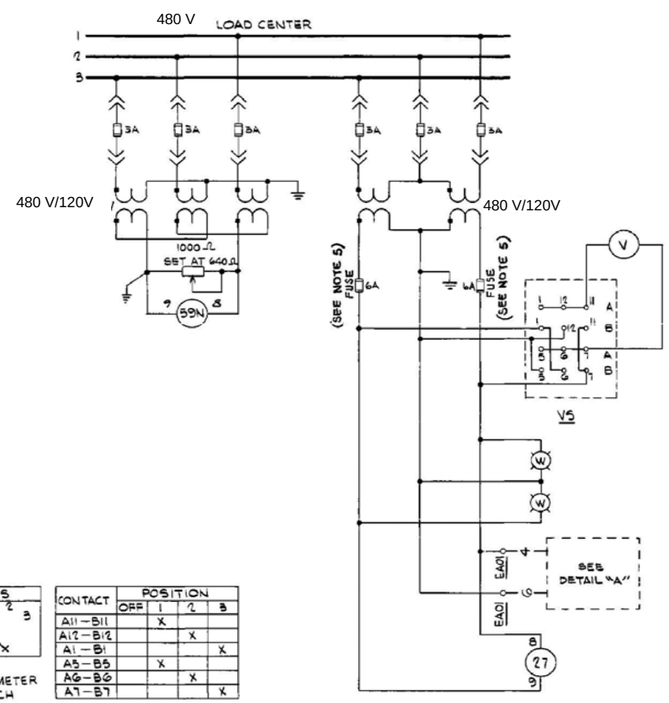

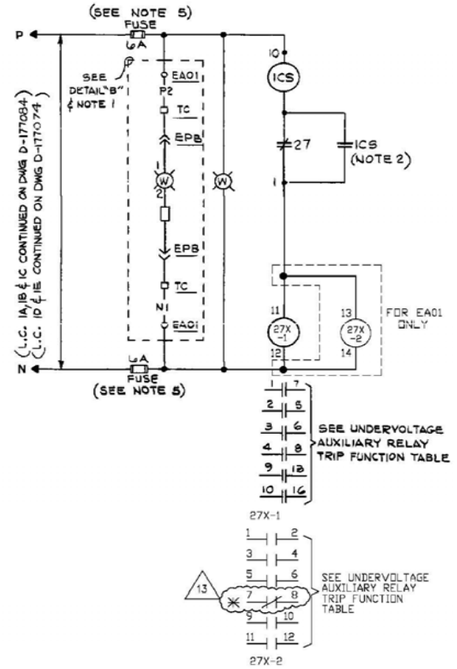

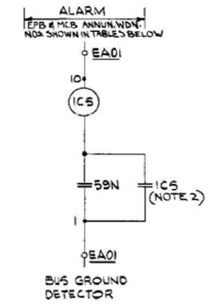

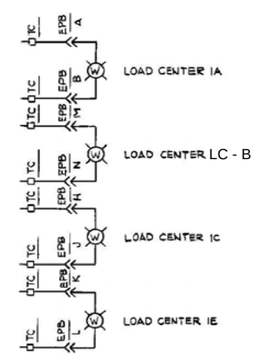

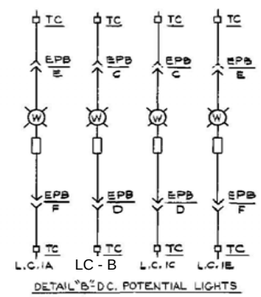

NOTES:

1. DOES NOT APPLY TO EB01.
2. SEAL IN CONTACT TO BE DISCONNECTED
3. CABLE FOR D.C. POTENTIAL LIGHTS.
4. CABLE FOR A.C. POTENTIAL LIGHTS.
5. SEE DRAWING A-181987 FOR FUSE RATING AND TYPE (LC COMPT'S EA01, EC01, ED01, AND EE01 ONLY).

V5	CONTACT	POSITION OFF	1	2	3
OFF 1 2 3	A11–B11		X		
	A12–B12			X	
	A1–B1				X
	A5–B5		X		
	A6–B6			X	
	A7–B7				X

VOLTMETER SWITCH

(W) TYPE W-2 S#505A702677
ROUND FIXED HANDLE
MAINTAINED CONTACTS

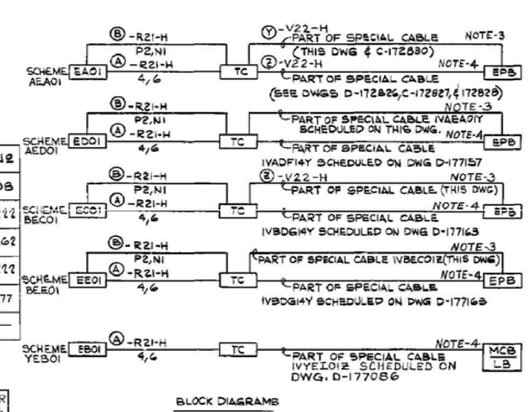

REFERENCE DRAWINGS:

A-177538 — ELECTRICAL GENERAL DETAILS AND NOTES
D-177000 — SINGLE LINE ELECTRICAL AUX SYSTEM (NORMAL - 4160V & 600V)
D-177001 — SINGLE LINE ELECTRICAL AUX SYSTEM (EMERG - 4160V & 600V)
D-177007 — SINGLE LINE PROTECTION AND METERING 600V LOAD CENTER 1A
C-177008 — SINGLE LINE PROTECTION AND METERING 600V LOAD CENTER 1B
C-177009 — SINGLE LINE PROTECTION AND METERING 600V LOAD CENTER 1C
D-177010 — SINGLE LINE PROTECTION AND METERING 600V LOAD CENTER 1D (EMERG)
D-177011 — SINGLE LINE PROTECTION AND METERING 600V LOAD CENTER 1E (EMERG)
A-181987 — FUSE REPLACEMENT MANUAL FOR SAFETY RELATED EQUIPMENT.

UNDERVOLTAGE AUXILIARY RELAY TRIP FUNCTION TABLE

27X-1 EA01	LC BKR COMPT	TRIP FUNCTION	DWG Nº	27X-1 EB01	LC BKR COMPT	TRIP FUNCTION	DWG Nº	27X-1 EC01	LC BKR COMPT	TRIP FUNCTION	DWG Nº
9 ‖ 15	EA13	600-480/277V LIGHTING TRANS 1A	D-177090	4 ‖ 8	EB05	CTMT COOLER 1B (NORMAL)	D-177221	2 ‖ 5	EC09	SPENT FUEL POOL PUMP 1A	D-177205
2 ‖ 5	EA06	CTMT PURGE AHU FAN STARTER PANEL	D-177242	3 ‖ 6	EB06	CTMT COOLER 1C (NORMAL)	D-177221	1 ‖ 7	EC12	CTMT COOLER 1D (NORMAL)	D-177221
3 ‖ 6	EA10	CTMT COOLER 1A (NORMAL)	D-177221	2 ‖ 5	EB10	HYDRO TEST PUMP	D-177241	9 ‖ 13	——	SPARE	——
4 ‖ 8	EA12	SPENT FUEL POOL PUMP 1B	D-177205	9 ‖ 13	——	SPARE	——	4 ‖ 8	EC05	AUX BLDG MAIN EXHAUST FAN 1A	D-177257
1 ‖ 7	EA03	CTMT PURGE EXH. FAN STARTER PANEL	D-177242	1 ‖ 7	EB11	AUX BLDG MAIN EXHAUST FAN 1B	D-177257	3 ‖ 6	EC06	RADWASTE AHU SUPPLY FAN	D-177250
10 ‖ 16	——	SPARE		10 ‖ 16	——	SPARE	——	10 ‖ 16	——	SPARE	——

27X-1 ED01	LC BKR COMPT	TRIP FUNCTION	DWG Nº	27X-1 EE01	LC BKR COMPT	TRIP FUNCTION	DWG Nº
4 ‖ 8	ED03	CRDM MG SET 1A	D-177198	4 ‖ 8	EE03	CRDM MG SET 1B	D-177198
1 ‖ 7	ED15	CTMT COOLER 1A (EMERG)	D-177222	2 ‖ 5	EE08	CTMT COOLER 1C (EMERG)	D-177222
3 ‖ 6	ED11	CRDM COOLER FAN 1B	D-177262	1 ‖ 7	EE13	CRDM COOLER FAN 1A	D-177262
10 ‖ 16	ED16	CTMT COOLER 1B (EMERG)	D-177222	10 ‖ 16	EE16	CTMT COOLER 1D (EMERG)	D-177222
2 ‖ 5	ED06	REACTOR CAVITY H2 DIL. SYSTEM AIR COMP. 1A	D-177277	3 ‖ 6	EE09	REACTOR CAVITY H2 DIL. SYSTEM AIR COMP. 1B	D-177277
9 ‖ 13	——	SPARE	——	9 ‖ 13	——	SPARE	——

DETAIL "A" – A.C. POTENTIAL LIGHTS

27X-2 EA01	LC BKR COMPT	TRIP FUNCTION	DWG NO.
1 ‖ 2	EA11	PRESSURIZER HTR GROUP 1A	D-177109
3 ‖ 4	EA15	STATION AIR COMPRESSOR 1C	D-172746 SH. 4
5 ‖ 6	——	SPARE	
✱ 7 ‖ 8	EA15	STATION AIR COMPRESSOR 1C AUTO CLOSE	D-172746 SH. 4
9 ‖ 10	——	SPARE	
11 ‖ 12	——	SPARE	

13

✱ CONSTRUCTION NOTE:
FIELD TO CONVERT NO CONTACT 7–8 TO NC. 13

EPB	TC					EPB
EMERGENCY POWER BOARD	TERMINATION CABINET	FAC	SWGR CELL	SCHEME	START-UP NUMBER	ANN. WDW. NO.
QSHIING EP32508-AB	Q1H25L037-A	1V	EA01	AEA01	5	PANEL "V," G2
QSHIING EP32508-AB	Q1H25L039-B	1V	EC01	BEC01	5	PANEL "V," G2
QSHIING EP32508-AB	Q1H25L037-A	1V	ED01	AED01	5	PANEL "V," G2
QSHIING EP32508-AB	Q1H25L039-B	1V	EE01	BEE01	5	PANEL "V," G2

MCB	TC					LB	MCB
MAIN CONTROL BOARD	TERMINATION CABINET	FAC	SWGR CELL	SCHEME	START-UP NUMBER	BUS POTENTIAL LIGHT BUS	ANNUNCIATOR WINDOW NO.
QSHIING MCB2500B-AB	Q1H25L016-B	1V	EB01	YEB01	5	NIH11E12111F-N	PANEL "L," B3

SNPP

LOAD CENTER
UNDERVOLTAGE SCHEME

Drawing No.: LC-B-05

Date: 05/20/2007

Revision No.: #6

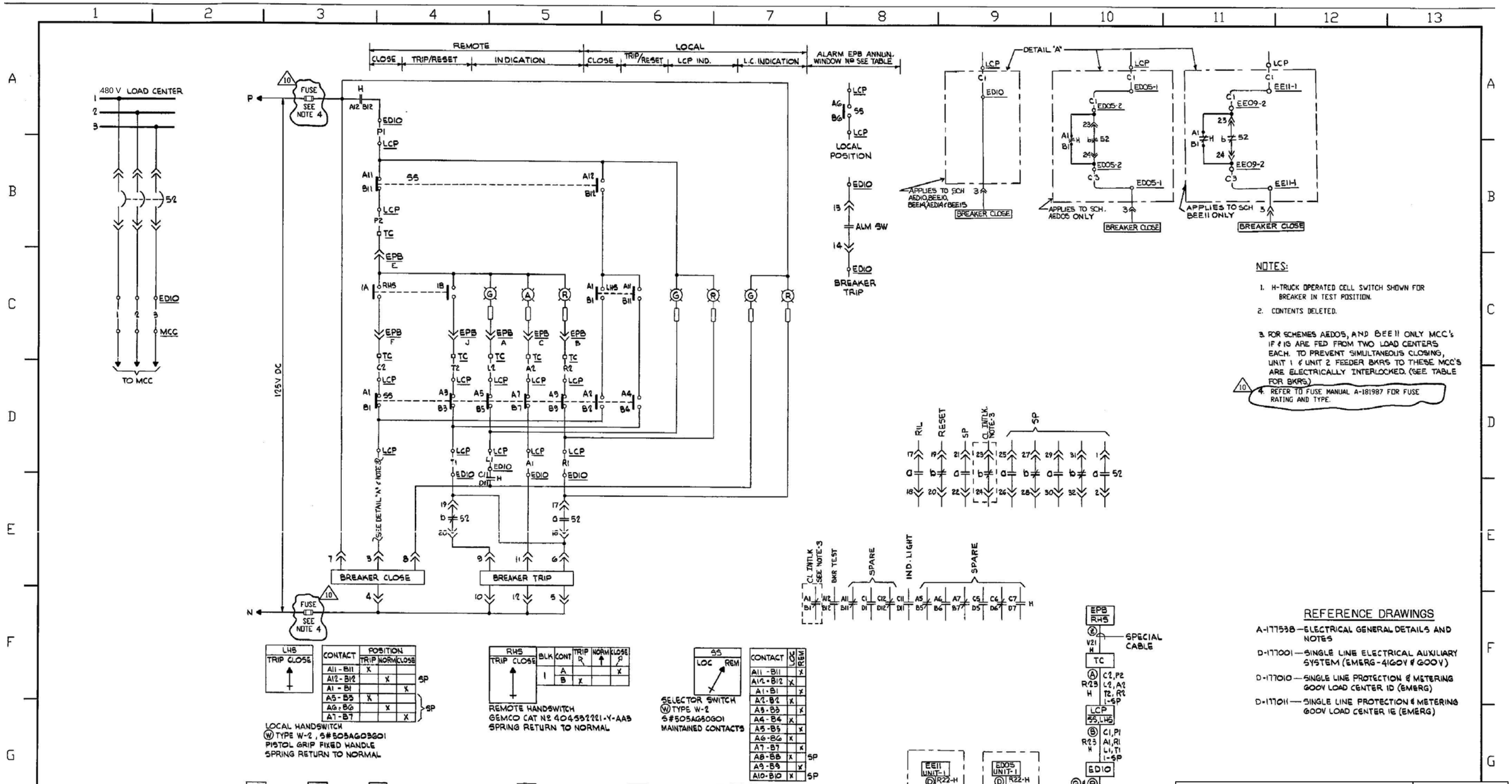

NOTES:

1. H-TRUCK OPERATED CELL SWITCH SHOWN FOR BREAKER IN TEST POSITION.
2. CONTENTS DELETED.
3. FOR SCHEMES AEDOS, AND BEE11 ONLY MCC's 1F & 1G ARE FED FROM TWO LOAD CENTERS EACH. TO PREVENT SIMULTANEOUS CLOSING, UNIT 1 & UNIT 2 FEEDER BKRS TO THESE MCC'S ARE ELECTRICALLY INTERLOCKED. (SEE TABLE FOR BKRS.)
4. REFER TO FUSE MANUAL A-181987 FOR FUSE RATING AND TYPE. (10)

LHS	
TRIP	CLOSE

CONTACT	POSITION TRIP	NORM	CLOSE	
A11 - B11	X			
A12 - B12		X		SP
A1 - B1			X	
A5 - B5	X			SP
A6 - B6		X		
A7 - B7			X	

LOCAL HANDSWITCH
(W) TYPE W-2, S#505AG03G01
PISTOL GRIP FIXED HANDLE
SPRING RETURN TO NORMAL

RHS TRIP CLOSE	BLK	CONT	TRIP R	NORM ↑	CLOSE R
	1	A			X
		B	X		

REMOTE HANDSWITCH
GEMCO CAT Nº 404592221-Y-AAB
SPRING RETURN TO NORMAL

SS: LOC REM

SELECTOR SWITCH
(W) TYPE W-2
S#505AG50G01
MAINTAINED CONTACTS

CONTACT	LOC	REM	
A11 - B11		X	
A12 - B12	X		
A1 - B1		X	
A2 - B2	X		
A3 - B3		X	
A4 - B4	X		
A5 - B5		X	
A6 - B6	X		
A7 - B7		X	
A8 - B8	X		SP
A9 - B9		X	
A10 - B10	X		SP

EQUIPMENT	FAC	SCHEME	L.C. COMPT.	LCP LOCAL CONTROL PANEL	EPB EMERGENCY POWER BOARD	TC TERMINATION CABINET	START-UP NUMBER	POWER CABLE CODE	MCC MOTOR CONT CENTER	CONDUCTOR Nos CABLE P	CABLE Q	RHS REMOTE HANDSWITCH	EPB ANNUNCIATOR WINDOW NO. BKR ON LOCAL CONTROL	BKR TRIP	LC COMPT
GOOV LOAD CENTER BKR'S TO MOTOR CONTROL CENTER	1A	IV	AEDIO	EDIO	QIH21E009-A	QIH25L037-A	6	LO9-F	FA-A2	1,2,3	1,2,3	QIR16HS2018KA-A	PANEL V, WINDOW G2	PANEL V, WINDOW G1	
	1B	IV	BEEIO	EEIO	QIH21E010-B	QIH25L039-B	6	LO9-F	FB-A2	1,2,3	X	QIR16HS2019KA-B	PANEL V, WINDOW G2	PANEL V, WINDOW G1	
	1F	IV	AEDOS	EDOS	QIH21E009-A	QIH25L037-A	6	LO9-F	FF-A2	1,2,3	1,2,3	QIR16HS2018EA-A	PANEL V, WINDOW G2	PANEL V, WINDOW G1	EDOS-2
	1G	IV	BEE11	EE11	QIH21E010-B	QIH25L039-B	6	LO9-F	FG-A2	1,2,3	1,2,3	QIR16HS2019LA-B	PANEL V, WINDOW G2	PANEL V, WINDOW G1	EE09-2
	1T	IV	BEE14	EE14	QIH21E010-B	QIH25L039-B	6	LO9-F	FT-A1	1,2,3	1,2,3	QIR16HS2019PA-B	PANEL V, WINDOW G2	PANEL V, WINDOW G1	
	1U	IV	AEDI4	EDI4	QIH21E009-A	QIH25L037-A	6	LIO-F	FU-A1	1,2,3	X	QIR16HS2018PA-A	PANEL V, WINDOW G2	PANEL V, WINDOW G1	
	1V	IV	BEE15	EE15	QIH21E010-B	QIH25L039-B	6	LIO-F	FV-A1	1,2,3	X	QIR16HS2019QA-B	PANEL V, WINDOW G2	PANEL V, WINDOW G1	

(10)

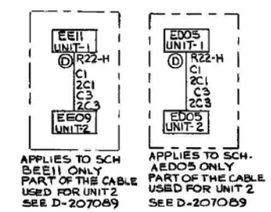

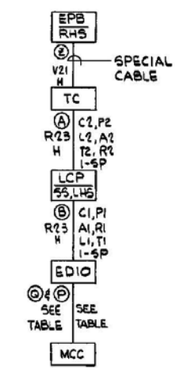

BLOCK DIAGRAM

REFERENCE DRAWINGS

A-177538—ELECTRICAL GENERAL DETAILS AND NOTES
D-177001—SINGLE LINE ELECTRICAL AUXILIARY SYSTEM (EMERG-41GOV & GOOV)
D-177010—SINGLE LINE PROTECTION & METERING GOOV LOAD CENTER 1D (EMERG)
D-177011—SINGLE LINE PROTECTION & METERING GOOV LOAD CENTER 1E (EMERG)

SNPP	Drawing No.: MCC-B1-01
MOTOR CONTROL CENTER MCC-1B	Date: 05/20/2007
	Revision No.: #6

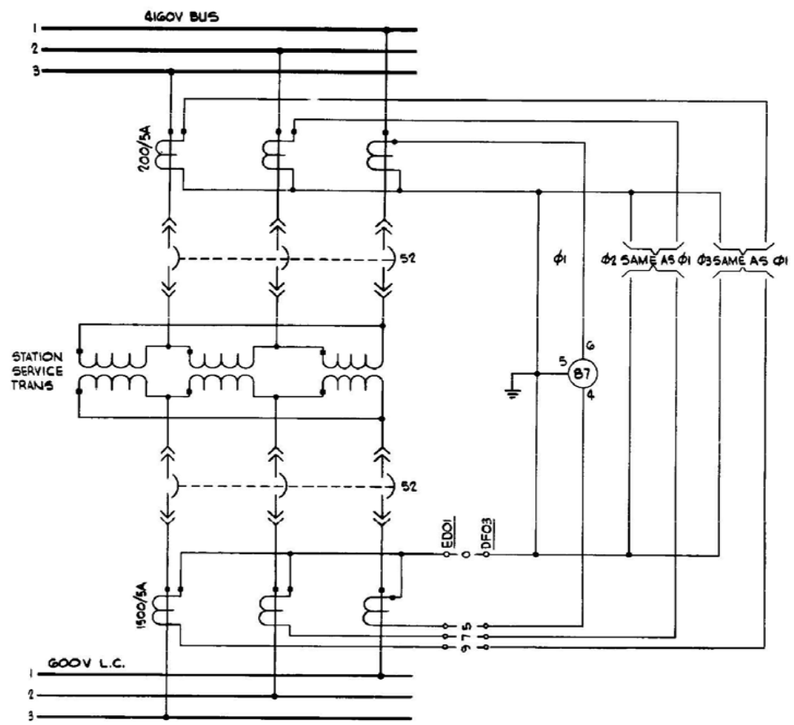

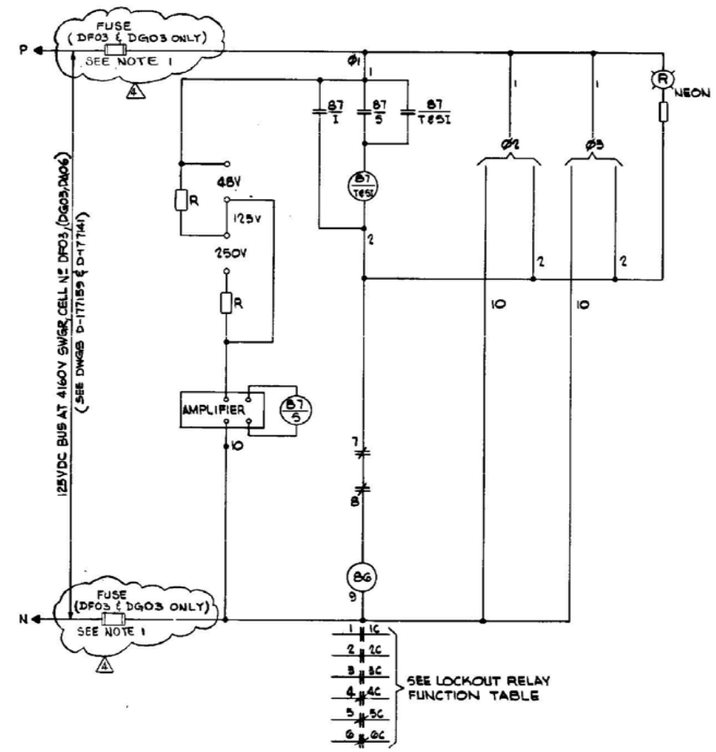

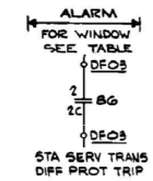

DEVICE	DESCRIPTION	MFR/TYPE	REMARKS
BG	LOCKOUT RELAY	GE/HEAGIA223	125V DC

NOTES:
1. SEE DRAWING A-181987 FOR FUSE RATING & TYPE.

LOCKOUT RELAY FUNCTION TABLE

BG DFO3	FUNCTION	DWG Nº	BG DGO3	FUNCTION	DWG Nº	BG DAO6	FUNCTION	DWG Nº
1 1C	TRIP BKR 52-DFO3	C-177159	1 1C	TRIP BKR 52-DGO3	C-177159	1 1C	TRIP BKR 52-DAO6	D-177141
2 2C	ALARM	THIS DWG	2 2C	ALARM	THIS DWG	2 2C	ALARM	THIS DWG
3 3C	SPARE	——	3 3C	SPARE	——	3 3C	SPARE	——
4 4C	SPARE	——	4 4C	SPARE	——	4 4C	BLOCK CLOSING BKR 52-DAO6	D-177141
5 5C	BLOCK CLOSING BKR 52-DFO3	C-177159	5 5C	BLOCK CLOSING BKR 52-DGO3	C-177159	5 5C	SPARE	——
6 6C	SPARE	——	6 6C	SPARE	——	6 6C	SPARE	——

EQUIPMENT		FAC	SCHEME	SWGR CELL	LOAD CENTER COMPARTMENT	START-UP NUMBER	ANNUNCIATOR WINDOW Nº
DIFFERENTIAL RELAY FOR STATION SERV TRANSFORMER	1D	1V	ADFO3	DFO3	EDO1	5	EPB PANEL "N" D4
	1E	1V	BDGO3	DGO3	EEO1	5	EPB PANEL "V" C4
	1I	1V	XDAO6	DAO6	EIO1	5	MCB PANEL "L" E2

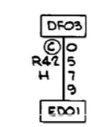

BLOCK DIAGRAM

REFERENCE DRAWINGS

A-177538 — ELECTRICAL GENERAL DETAILS AND NOTES
D-177001 — SINGLE LINE ELECTRICAL AUX SYSTEM (EMERG - 4160V & 600V)
D-177002 — SINGLE LINE PROTECTION AND METERING 4160V SWITCHGEAR, BUS 1A
D-177005 — SINGLE LINE PROTECTION AND METERING 4160V SWITCHGEAR BUS 1F (EMERG)
D-177006 — SINGLE LINE PROTECTION AND METERING 4160V SWITCHGEAR BUS 1G (EMERG)
C-177010 — SINGLE LINE PROTECTION AND METERING 600V LOAD CENTER 1D (EMERG)
C-177011 — SINGLE LINE PROTECTION AND METERING 600V LOAD CENTER 1E (EMERG)
C-177674 — SINGLE LINE PROTECTION AND METERING 600V LOAD CENTER 1I
A-181987 — FUSE REPLACEMENT MANUAL FOR SAFETY RELATED EQUIPMENT.

SNPP	Drawing No.: LC-B-06
STATION SERVICE TRANSFORMER DIFFERENTIAL PROTECTION SCHEME	Date: 05/20/2007
	Revision No.: #6