Duke Energy®

JAMES R MORRIS
Vice President

Catawba Nuclear Station
4800 Concord Road / CN01VP
York, SC 29745-9635

803 831 4251
803 831 3221 fax

July 30, 2007

U.S. Nuclear Regulatory Commission
Attention: Document Control Desk
Washington, D.C. 20555

Subject: Duke Power Company LLC d/b/a Duke Energy Carolinas, LLC (Duke)
Catawba Nuclear Station, Units 1 and 2
Docket Numbers 50-413 and 50-414
Proposed Technical Specifications (TS) and Bases Amendment
TS and Bases 3.7.8, Nuclear Service Water System (NSWS)

Pursuant to 10 CFR 50.90, Duke is requesting amendments to the Catawba Facility Operating Licenses and TS. This request is to modify the subject TS and Bases to allow single supply header operation of the NSWS (Duke designation "RN") for a time period of 35 days. The change, which is being requested on a permanent basis, will facilitate future maintenance of the NSWS supply headers. Specifically, the change will allow each of the buried supply headers to be removed from service for extensive repair, coating, lining, or replacement due to piping degradation from various corrosion mechanisms, including Microbiological Induced Corrosion (MIC), general corrosion, under deposit corrosion, and preferential weld attack. The change will also facilitate future inspections of the repaired 42-inch NSWS buried supply piping on a periodic basis, in conformance with regulatory requirements. These activities will ensure the long-term reliability of the NSWS.

The contents of this amendment request package are as follows:

Attachment 1 provides a marked-up version of the existing TS and Bases for the NSWS, showing the proposed changes. Attachment 2 provides the reprinted version of the TS and Bases for the NSWS, incorporating the proposed changes. Attachment 3 provides the background, description of

A001
NRR

Rec'd 9/20/07

proposed changes, and technical justification supporting the amendment request. Pursuant to 10 CFR 50.91, Attachment 4 provides the evaluation demonstrating that the amendment request contains no significant hazards considerations. Pursuant to 10 CFR 51.22(c)(9), Attachment 5 provides the basis for the categorical exclusion from performing an Environmental Assessment/Impact Statement. Attachment 6 is a list of NRC commitments associated with these proposed amendments.

Duke is requesting NRC review and approval of these proposed amendments by September 1, 2008 in order to support planned activities on the NSWS supply headers. These activities include removing each 2500-foot header from service to hydroblast and clean corrosion products, perform an internal inspection and any welding repairs identified, establish required environmental conditions, sandblast the internal surfaces, and apply a three-part epoxy coating consisting of prime, high-build, and finish coats. Future activities will include cleaning to support performance of internal coating inspections and any coating repairs identified.

Duke is requesting a 60-day implementation period in conjunction with these amendments. Implementation of these amendments will require changes to the Updated Final Safety Analysis Report (UFSAR). The following UFSAR sections may potentially be impacted: 3.1, "Conformance with General Design Criteria"; 6.6, "Inservice Inspection of Class 2 and 3 Components"; 7.4.2, "Nuclear Service Water System Instrumentation and Control"; 9.2.1, "Nuclear Service Water"; 9.2.5, "Ultimate Heat Sink"; 9.5.9, "Diesel Generator Room Sump Pump System"; and Table 9.4, "Nuclear Service Water System Failure Analysis". Necessary UFSAR changes will be submitted to the NRC in accordance with 10 CFR 50.71(e).

In accordance with Duke administrative procedures and the Quality Assurance Program Topical Report, these proposed amendments have been previously reviewed and approved by the Catawba Plant Operations Review Committee and the Duke Corporate Nuclear Safety Review Board.

Pursuant to 10 CFR 50.91, a copy of these proposed amendments is being sent to the appropriate State of South Carolina official.

Inquiries on this matter should be directed to L.J. Rudy at (803) 831-3084.

Very truly yours,

James R. Morris

LJR/s

Attachments

James R. Morris affirms that he is the person who subscribed his name to the foregoing statement, and that all the matters and facts set forth herein are true and correct to the best of his knowledge.

James R. Morris, Vice President

Subscribed and sworn to me: 7/30/07
Date

Notary Public

My commission expires: 7/2/2014
Date

SEAL

xc (with attachments):

W.D. Travers
U.S. Nuclear Regulatory Commission
Regional Administrator, Region II
Atlanta Federal Center
61 Forsyth St., SW, Suite 23T85
Atlanta, GA 30303

A.T. Sabisch
Senior Resident Inspector (CNS)
U.S. Nuclear Regulatory Commission
Catawba Nuclear Station

J.F. Stang, Jr. (addressee only)
NRC Senior Project Manager (CNS)
U.S. Nuclear Regulatory Commission
One White Flint North, Mail Stop 8-H4A
11555 Rockville Pike
Rockville, MD 20852-2738

H.J. Porter
Assistant Director
Division of Radioactive Waste Management
Bureau of Land and Waste Management
South Carolina Department of Health and Environmental Control
2600 Bull St.
Columbia, SC 29201

bxc (with attachments):

R.D. Hart (CN01RC)
L.J. Rudy (CN01RC)
K.E. Nicholson (CN01RC)
T.L. Edwards (CN03SP)
R.L. Gill, Jr. (EC05O)
NCMPA-1
NCEMC
PMPA
SREC
Document Control File 801.01
RGC File
ELL-EC05O

ATTACHMENT 1

MARKED-UP TS AND BASES PAGES

(2) Technical Specifications

The Technical Specifications contained in Appendix A, as revised through Amendment No 236 which are attached hereto, are hereby incorporated into this renewed operating license. Duke Power Company LLC shall operate the facility in accordance with the Technical Specifications.

(3) Updated Final Safety Analysis Report

The Updated Final Safety Analysis Report supplement submitted pursuant to 10 CFR 54.21(d), as revised on December 16, 2002, describes certain future activities to be completed before the period of extended operation. Duke shall complete these activities no later than December 6, 2024, and shall notify the NRC in writing when implementation of these activities is complete and can be verified by NRC inspection.

The Updated Final Safety Analysis Report supplement as revised on December 16, 2002, described above, shall be included in the next scheduled update to the Updated Final Safety Analysis Report required by 10 CFR 50.71(e)(4), following issuance of this renewed operating license. Until that update is complete, Duke may make changes to the programs described in such supplement without prior Commission approval, provided that Duke evaluates each such change pursuant to the criteria set forth in 10 CFR 50.59 and otherwise complies with the requirements in that section.

(4) Antitrust Conditions

Duke Power Company LLC shall comply with the antitrust conditions delineated in Appendix C to this renewed operating license.

(5) Fire Protection Program (Section 9.5.1, SER, SSER #2, SSER #3, SSER #4, SSER #5)*

Duke Power Company LLC shall implement and maintain in effect all provisions of the approved fire protection program as described in the Updated Final Safety Analysis Report, as amended, for the facility and as approved in the SER through Supplement 5, subject to the following provision:

> The licensee may make changes to the approved fire protection program without prior approval of the Commission only if those changes would not adversely affect the ability to achieve and maintain safe shutdown in the event of a fire.

*The parenthetical notation following the title of this renewed operating license condition denotes the section of the Safety Evaluation Report and/or its supplement wherein this renewed license condition is discussed.

(2) Technical Specifications

The Technical Specifications contained in Appendix A, as revised through Amendment No. 232 which are attached hereto, are hereby incorporated into this renewed operating license. Duke Power Company LLC shall operate the facility in accordance with the Technical Specifications.

(3) Updated Final Safety Analysis Report

The Updated Final Safety Analysis Report supplement submitted pursuant to 10 CFR 54.21(d), as revised on December 16, 2002, describes certain future activities to be completed before the period of extended operation. Duke shall complete these activities no later than February 24, 2026, and shall notify the NRC in writing when implementation of these activities is complete and can be verified by NRC inspection.

The Updated Final Safety Analysis Report supplement as revised on December 16, 2002, described above, shall be included in the next scheduled update to the Updated Final Safety Analysis Report required by 10 CFR 50.71(e)(4), following issuance of this renewed operating license. Until that update is complete, Duke may make changes to the programs described in such supplement without prior Commission approval, provided that Duke evaluates each such change pursuant to the criteria set forth in 10 CFR 50.59 and otherwise complies with the requirements in that section.

(4) Antitrust Conditions

Duke Power Company LLC shall comply with the antitrust conditions delineated in Appendix C to this renewed operating license.

(5) Fire Protection Program (Section 9.5.1, SER, SSER #2, SSER #3, SSER #4, SSER #5)*

Duke Power Company LLC shall implement and maintain in effect all provisions of the approved fire protection program as described in the Updated Final Safety Analysis Report, as amended, for the facility and as approved in the SER through Supplement 5, subject to the following provision:

> The licensee may make changes to the approved fire protection program without prior approval of the Commission only if those changes would not adversely affect the ability to achieve and maintain safe shutdown in the event of a fire.

*The parenthetical notation following the title of this renewed operating license condition denotes the section of the Safety Evaluation Report and/or its supplements wherein this renewed license condition is discussed.

3.7 PLANT SYSTEMS

3.7.8 Nuclear Service Water System (NSWS)

LCO 3.7.8 Two NSWS trains shall be OPERABLE*.

APPLICABILITY: MODES 1, 2, 3, and 4.

ACTIONS

CONDITION	REQUIRED ACTION	COMPLETION TIME
A. One NSWS train inoperable.	A.1 ----------NOTES---------- 1. Enter applicable Conditions and Required Actions of LCO 3.8.1, "AC Sources—Operating," for emergency diesel generator made inoperable by NSWS. 2. Enter applicable Conditions and Required Actions of LCO 3.4.6, "RCS Loops—MODE 4," for residual heat removal loops made inoperable by NSWS. ---------- Restore NSWS train to OPERABLE status.	72 hours*

(continued)

*For each Unit, the Completion Time that one NSWS train can be inoperable as specified by Required Action A.1 may be extended beyond the 72 hours up to 336 hours as part of the NSWS system upgrades. System upgrades include maintenance activities associated with cleaning of NSWS piping, weld coating, and necessary repairs and/or replacement. Upon completion of the system upgrades and system restoration, this footnote is no longer applicable and if not used, will expire at midnight on December 31, 2006.

INSERT 1

ACTIONS (continued)

CONDITION	REQUIRED ACTION	COMPLETION TIME
~~B.~~ C. Required Action and associated Completion Time of Condition A or B not met.	~~B.~~ C.1 Be in MODE 3.	6 hours
	AND	
	~~B.~~ C.2 Be in MODE 5.	36 hours

SURVEILLANCE REQUIREMENTS

	SURVEILLANCE	FREQUENCY
SR 3.7.8.1	----------NOTE---------- Isolation of NSWS flow to individual components does not render the NSWS inoperable. ---------- Verify each NSWS manual, power operated, and automatic valve in the flow path servicing safety related equipment, that is not locked, sealed, or otherwise secured in position, is in the correct position.	31 days
SR 3.7.8.2	Verify each NSWS automatic valve in the flow path that is not locked, sealed, or otherwise secured in position, actuates to the correct position on an actual or simulated actuation signal.	18 months
SR 3.7.8.3	Verify each NSWS pump starts automatically on an actual or simulated actuation signal.	18 months

INSERT 2

INSERTS for TS 3.7.8:

INSERT 1

B.	----------NOTES---------- 1. Immediately enter Condition A of this LCO if one or more NSWS components become inoperable while in this Condition and one NSWS train remains OPERABLE. 2. Immediately enter LCO 3.0.3 if one or more NSWS components become inoperable while in this Condition and no NSWS train remains OPERABLE. ---------- One NSWS supply header inoperable due to NSWS being aligned for single supply header operation.	B.1	Restore NSWS supply header to OPERABLE status.	35 days

INSERT 2

----------NOTE----------
Not required to be met for valves that are maintained in position to support NSWS single supply header operation.

BASES

BACKGROUND (continued)

Additional information about the design and operation of the NSWS, along with a list of the components served, is presented in the UFSAR, Section 9.2.1 (Ref. 1). The principal safety related function of the NSWS is the removal of decay heat from the reactor via the CCW System.

APPLICABLE SAFETY ANALYSES

The design basis of the NSWS is for one NSWS train, in conjunction with the CCW System and a containment spray system, to remove core decay heat following a design basis LOCA as discussed in the UFSAR, Section 6.2 (Ref. 2). This prevents the containment sump fluid from increasing in temperature during the recirculation phase following a LOCA and provides for a gradual reduction in the temperature of this fluid as it is supplied to the Reactor Coolant System by the ECCS pumps. The NSWS is designed to perform its function with a single failure of any active component, assuming the loss of offsite power.

The NSWS, in conjunction with the CCW System, also cools the unit from residual heat removal (RHR), as discussed in the UFSAR, Section 5.4 (Ref. 3), from RHR entry conditions to MODE 5 during normal and post accident operations. The time required for this evolution is a function of the number of CCW and RHR System trains that are operating. Thirty six hours after a trip from RTP, one NSWS train is sufficient to remove decay heat during subsequent operations in MODES 5 and 6. This assumes a maximum NSWS temperature, a simultaneous design basis event on the other unit, and the loss of offsite power.

The NSWS satisfies Criterion 3 of 10 CFR 50.36 (Ref. 4).

LCO

Two NSWS trains are required to be OPERABLE to provide the required redundancy to ensure that the system functions to remove post accident heat loads, assuming that the worst case single active failure occurs coincident with the loss of offsite power.

while the NSWS is operating in the normal dual supply header alignment,

An NSWS train is considered OPERABLE during MODES 1, 2, 3, and 4 when:

a. 1. Both NSWS pumps on the NSWS loop are OPERABLE; or

BASES

LCO (continued)

2. One unit's NSWS pump is OPERABLE and one unit's flowpath to the non essential header, AFW pumps, and Containment Spray heat exchangers are isolated (or equivalent flow restrictions); and

b. The associated piping, valves, and instrumentation and controls required to perform the safety related function are OPERABLE.

INSERT 1

The NSWS system is shared between the two units. The shared portions of the system must be OPERABLE for each unit when that unit is in the MODE of Applicability. Additionally, both normal and emergency power for shared components must also be OPERABLE. If a shared NSWS component becomes inoperable, or normal or emergency power to shared components becomes inoperable, then the Required Actions of this LCO must be entered independently for each unit that is in the MODE of applicability of the LCO, except as noted in a.2 above. In this case, sufficient flow is available, however, this configuration results in inoperabilities within other required systems on one unit and the associated Required Actions must be entered. Use of a NSWS pump and associated diesel generator on a shutdown unit to support continued operation (> 72 hours) of a unit with an inoperable NSWS pump is an unreviewed safety question.

for operation in the normal dual supply header alignment

not allowed

APPLICABILITY

In MODES 1, 2, 3, and 4, the NSWS is a normally operating system that is required to support the OPERABILITY of the equipment serviced by the NSWS and required to be OPERABLE in these MODES.

In MODES 5 and 6, the requirements of the NSWS are determined by the systems it supports.

ACTIONS

A.1

If one NSWS train is inoperable, action must be taken to restore OPERABLE status within 72 hours. In this Condition, the remaining OPERABLE NSWS train is adequate to perform the heat removal function. However, the overall reliability is reduced because a single failure in the OPERABLE NSWS train could result in loss of NSWS function. Due to the shared nature of the NSWS, both units are required to enter a 72 hour Action when a NSWS Train becomes inoperable on either unit. Required Action A.1 is modified by two Notes. The first Note indicates that the applicable Conditions and Required Actions of

BASES

ACTIONS (continued)

LCO 3.8.1, "AC Sources—Operating," should be entered if an inoperable NSWS train results in an inoperable emergency diesel generator. The second Note indicates that the applicable Conditions and Required Actions of LCO 3.4.6, "RCS Loops—MODE 4," should be entered if an inoperable NSWS train results in an inoperable decay heat removal train (RHR). An example of when these Notes should be applied is with both units' loop 'A' NSWS pumps inoperable, both units' 'A' emergency diesel generators and both units' 'A' RHR systems should be declared inoperable and appropriate Actions entered. This is an exception to LCO 3.0.6 and ensures the proper actions are taken for these components. The 72 hour Completion Time is based on the redundant capabilities afforded by the OPERABLE train, and the low probability of a DBA occurring during this time period.

INSERT 2

C ~~B~~.1 and ~~B~~.2 C

If the NSWS train cannot be restored to OPERABLE status within the associated Completion Time, the unit must be placed in a MODE in which the LCO does not apply. To achieve this status, the unit must be placed in at least MODE 3 within 6 hours and in MODE 5 within 36 hours.

or if the NSWS supply header cannot be restored to OPERABLE status within the associated Completion Time,

The allowed Completion Times are reasonable, based on operating experience, to reach the required unit conditions from full power conditions in an orderly manner and without challenging unit systems.

SURVEILLANCE REQUIREMENTS

SR 3.7.8.1

This SR is modified by a Note indicating that the isolation of the NSWS components or systems may render those components inoperable, but does not affect the OPERABILITY of the NSWS.

Verifying the correct alignment for manual, power operated, and automatic valves in the NSWS flow path provides assurance that the proper flow paths exist for NSWS operation. This SR does not apply to valves that are locked, sealed, or otherwise secured in position, since they are verified to be in the correct position prior to being locked, sealed, or secured. This SR does not require any testing or valve manipulation; rather, it involves verification that those valves capable of being mispositioned are in the correct position. This SR does not apply to valves that cannot be inadvertently misaligned, such as check valves. The 31 day Frequency is based on engineering judgment, is consistent with the procedural controls governing valve operation, and ensures

BASES

SURVEILLANCE REQUIREMENTS (continued)

correct valve positions.

SR 3.7.8.2

This SR verifies proper automatic operation of the NSWS valves on an actual or simulated actuation signal. The signals that cause the actuation are from Safety Injection and Phase 'B' isolation. The NSWS is a normally operating system that cannot be fully actuated as part of normal testing. This Surveillance is not required for valves that are locked, sealed, or otherwise secured in the required position under administrative controls. The 18 month Frequency is based on the need to perform this Surveillance under the conditions that apply during a unit outage and the potential for an unplanned transient if the Surveillance were performed with the reactor at power. Operating experience has shown that these components usually pass the Surveillance when performed at the 18 month Frequency. Therefore, the Frequency is acceptable from a reliability standpoint.

INSERT 3

SR 3.7.8.3

This SR verifies proper automatic operation of the NSWS pumps on an actual or simulated actuation signal. The signals that cause the actuation are from Safety Injection and Loss of Offsite Power. The NSWS is a normally operating system that cannot be fully actuated as part of normal testing during normal operation. The 18 month Frequency is based on the need to perform this Surveillance under the conditions that apply during a unit outage and the potential for an unplanned transient if the Surveillance were performed with the reactor at power. Operating experience has shown that these components usually pass the Surveillance when performed at the 18 month Frequency. Therefore, the Frequency is acceptable from a reliability standpoint.

REFERENCES

1. UFSAR, Section 9.2.

2. UFSAR, Section 6.2.

3. UFSAR, Section 5.4.

4. 10 CFR 50.36, Technical Specifications, (c)(2)(ii).

INSERTS for TS 3.7.8 Bases:

INSERT 1

While the NSWS is operating in the single supply header alignment, one of the supply headers is removed from service in support of planned maintenance or modification activities associated with the supply header that is taken out of service. In this configuration, each NSWS train is considered OPERABLE with the required NSWS flow to safety related equipment being fed through the remaining OPERABLE NSWS supply header. While the NSWS is operating in the single supply header alignment, an NSWS train is considered OPERABLE during MODES 1, 2, 3, and 4 when:

a. The associated train related NSWS pumps are OPERABLE; and

b. The associated piping (except for the supply header that is taken out of service), valves, and instrumentation and controls required to perform the safety related function are OPERABLE.

INSERT 2

B.1

If one NSWS supply header is inoperable due to the NSWS being aligned for single supply header operation, the NSWS supply header must be restored to OPERABLE status within 35 days. Dual supply header operation is the normal alignment of the NSWS. Condition B is only allowed to be entered in support of planned maintenance or modification activities associated with the supply header that is taken out of service. Entry into this Condition is not allowed in response to unplanned events (e.g., a component failure) or for other events involving the NSWS. For unplanned events or other events involving the NSWS, Condition A must be entered. The Completion Time of 35 days is supported by probabilistic risk analysis. While in Condition B, the single supply header is adequate to perform the heat removal function for all required safety related equipment for both safety trains. Due to the shared nature of the NSWS, both units are required to enter this Condition when the NSWS is aligned for single supply header operation.

In order to prevent the potential for NSWS pump runout, the single NSWS pump flow balance alignment cannot be utilized while the NSWS is aligned for single supply header operation.

Condition B is modified by two Notes. Note 1 requires immediate entry into Condition A of this LCO if one or more NSWS components become inoperable while in this Condition and one NSWS train remains OPERABLE. With one remaining OPERABLE NSWS train, the NSWS can still perform its safety related function. However, with one inoperable NSWS train, the NSWS cannot be assured of performing its safety related function in the event of a single failure of another NSWS component. The most limiting single failure is the failure of an NSWS pit to automatically transfer from Lake Wylie to the SNSWP during a seismic event. While the loss of any NSWS component subject to the requirements of this LCO can result in the entry into Condition A, the most common

example is the inoperability of an NSWS pump. This occurs during periodic testing of the emergency diesel generators. Inoperability of an emergency diesel generator renders its associated NSWS pump inoperable. Note 2 requires immediate entry into LCO 3.0.3 if one or more NSWS components become inoperable while in this Condition and no NSWS train remains OPERABLE. In this case, the NSWS cannot perform its safety related function.

INSERT 3

This SR is modified by a Note that states that the SR is not required to be met for valves that are maintained in position to support NSWS single supply header operation. When the NSWS is placed in this alignment, certain automatic valves in the system are maintained in position and will not automatically reposition in response to an actuation signal while the NSWS is in this alignment.

ATTACHMENT 2

REPRINTED TS AND BASES PAGES

(2) Technical Specifications

The Technical Specifications contained in Appendix A, as revised through Amendment No which are attached hereto, are hereby incorporated into this renewed operating license. Duke Power Company LLC shall operate the facility in accordance with the Technical Specifications.

(3) Updated Final Safety Analysis Report

The Updated Final Safety Analysis Report supplement submitted pursuant to 10 CFR 54.21(d), as revised on December 16, 2002, describes certain future activities to be completed before the period of extended operation. Duke shall complete these activities no later than December 6, 2024, and shall notify the NRC in writing when implementation of these activities is complete and can be verified by NRC inspection.

The Updated Final Safety Analysis Report supplement as revised on December 16, 2002, described above, shall be included in the next scheduled update to the Updated Final Safety Analysis Report required by 10 CFR 50.71(e)(4), following issuance of this renewed operating license. Until that update is complete, Duke may make changes to the programs described in such supplement without prior Commission approval, provided that Duke evaluates each such change pursuant to the criteria set forth in 10 CFR 50.59 and otherwise complies with the requirements in that section.

(4) Antitrust Conditions

Duke Power Company LLC shall comply with the antitrust conditions delineated in Appendix C to this renewed operating license.

(5) Fire Protection Program (Section 9.5.1, SER, SSER #2, SSER #3, SSER #4, SSER #5)*

Duke Power Company LLC shall implement and maintain in effect all provisions of the approved fire protection program as described in the Updated Final Safety Analysis Report, as amended, for the facility and as approved in the SER through Supplement 5, subject to the following provision:

> The licensee may make changes to the approved fire protection program without prior approval of the Commission only if those changes would not adversely affect the ability to achieve and maintain safe shutdown in the event of a fire.

*The parenthetical notation following the title of this renewed operating license condition denotes the section of the Safety Evaluation Report and/or its supplement wherein this renewed license condition is discussed.

(2) Technical Specifications

The Technical Specifications contained in Appendix A, as revised through Amendment No which are attached hereto, are hereby incorporated into this renewed operating license. Duke Power Company LLC shall operate the facility in accordance with the Technical Specifications.

(3) Updated Final Safety Analysis Report

The Updated Final Safety Analysis Report supplement submitted pursuant to 10 CFR 54.21(d), as revised on December 16, 2002, describes certain future activities to be completed before the period of extended operation. Duke shall complete these activities no later than February 24, 2026, and shall notify the NRC in writing when implementation of these activities is complete and can be verified by NRC inspection.

The Updated Final Safety Analysis Report supplement as revised on December 16, 2002, described above, shall be included in the next scheduled update to the Updated Final Safety Analysis Report required by 10 CFR 50.71(e)(4), following issuance of this renewed operating license. Until that update is complete, Duke may make changes to the programs described in such supplement without prior Commission approval, provided that Duke evaluates each such change pursuant to the criteria set forth in 10 CFR 50.59 and otherwise complies with the requirements in that section.

(4) Antitrust Conditions

Duke Power Company LLC shall comply with the antitrust conditions delineated in Appendix C to this renewed operating license.

(5) Fire Protection Program (Section 9.5.1, SER, SSER #2, SSER #3, SSER #4, SSER #5)*

Duke Power Company LLC shall implement and maintain in effect all provisions of the approved fire protection program as described in the Updated Final Safety Analysis Report, as amended, for the facility and as approved in the SER through Supplement 5, subject to the following provision:

> The licensee may make changes to the approved fire protection program without prior approval of the Commission only if those changes would not adversely affect the ability to achieve and maintain safe shutdown in the event of a fire.

*The parenthetical notation following the title of this renewed operating license condition denotes the section of the Safety Evaluation Report and/or its supplements wherein this renewed license condition is discussed.

3.7 PLANT SYSTEMS

3.7.8 Nuclear Service Water System (NSWS)

LCO 3.7.8 Two NSWS trains shall be OPERABLE.

APPLICABILITY: MODES 1, 2, 3, and 4.

ACTIONS

CONDITION	REQUIRED ACTION	COMPLETION TIME
A. One NSWS train inoperable.	A.1 ----------NOTES---------- 1. Enter applicable Conditions and Required Actions of LCO 3.8.1, "AC Sources—Operating," for emergency diesel generator made inoperable by NSWS. 2. Enter applicable Conditions and Required Actions of LCO 3.4.6, "RCS Loops—MODE 4," for residual heat removal loops made inoperable by NSWS. ---------- Restore NSWS train to OPERABLE status.	72 hours

(continued)

ACTIONS (continued)

CONDITION	REQUIRED ACTION	COMPLETION TIME
B. ----------NOTES---------- 1. Immediately enter Condition A of this LCO if one or more NSWS components become inoperable while in this Condition and one NSWS train remains OPERABLE. 2. Immediately enter LCO 3.0.3 if one or more NSWS components become inoperable while in this Condition and no NSWS train remains OPERABLE. ---------- One NSWS supply header inoperable due to NSWS being aligned for single supply header operation.	B.1 Restore NSWS supply header to OPERABLE status.	35 days
C. Required Action and associated Completion Time of Condition A or B not met.	C.1 Be in MODE 3. AND C.2 Be in MODE 5.	6 hours 36 hours

SURVEILLANCE REQUIREMENTS

SURVEILLANCE		FREQUENCY
SR 3.7.8.1	----------NOTE---------- Isolation of NSWS flow to individual components does not render the NSWS inoperable. ---------- Verify each NSWS manual, power operated, and automatic valve in the flow path servicing safety related equipment, that is not locked, sealed, or otherwise secured in position, is in the correct position.	31 days
SR 3.7.8.2	----------NOTE---------- Not required to be met for valves that are maintained in position to support NSWS single supply header operation. ---------- Verify each NSWS automatic valve in the flow path that is not locked, sealed, or otherwise secured in position, actuates to the correct position on an actual or simulated actuation signal.	18 months
SR 3.7.8.3	Verify each NSWS pump starts automatically on an actual or simulated actuation signal.	18 months

B 3.7 PLANT SYSTEMS

B 3.7.8 Nuclear Service Water System (NSWS)

BASES

BACKGROUND

The NSWS, including Lake Wylie and the Standby Nuclear Service Water Pond (SNSWP), provides a heat sink for the removal of process and operating heat from safety related components during a Design Basis Accident (DBA) or transient. During normal operation, and a normal shutdown, the NSWS also provides this function for various safety related and nonsafety related components. The safety related function is covered by this LCO.

The NSWS consists of two independent loops (A and B) of essential equipment, each of which is shared between units. Each loop contains two NSWS pumps, each of which is supplied from a separate emergency diesel generator. Each set of two pumps supplies two trains (1A and 2A, or 1B and 2B) of essential equipment through common discharge piping. While the pumps are unit designated, i.e., 1A, 1B, 2A, 2B, all pumps receive automatic start signals from a safety injection or blackout signal from either unit. Therefore, a pump designated to one unit will supply post accident cooling to equipment in that loop on both units, provided its associated emergency diesel generator is available. For example, the 1A NSWS pump, supplied by emergency diesel 1A, will supply post accident cooling to NSWS trains 1A and 2A.

One NSWS loop containing two OPERABLE NSWS pumps has sufficient capacity to supply post loss of coolant accident (LOCA) loads on one unit and shutdown and cooldown loads on the other unit. Thus, the OPERABILITY of two NSWS loops assures that no single failure will keep the system from performing the required safety function. Additionally, one NSWS loop containing one OPERABLE NSWS pump has sufficient capacity to maintain one unit indefinitely in MODE 5 (commencing 36 hours following a trip from RTP) while supplying the post LOCA loads of the other unit. Thus, after a unit has been placed in MODE 5, only one NSWS pump and its associated emergency diesel generator are required to be OPERABLE on each loop, in order for the system to be capable of performing its required safety function, including single failure considerations.

Additional information about the design and operation of the NSWS, along with a list of the components served, is presented in the UFSAR, Section 9.2.1 (Ref. 1). The principal safety related function of the NSWS is the removal of decay heat from the reactor via the CCW System.

BASES

APPLICABLE SAFETY ANALYSES

The design basis of the NSWS is for one NSWS train, in conjunction with the CCW System and a containment spray system, to remove core decay heat following a design basis LOCA as discussed in the UFSAR, Section 6.2 (Ref. 2). This prevents the containment sump fluid from increasing in temperature during the recirculation phase following a LOCA and provides for a gradual reduction in the temperature of this fluid as it is supplied to the Reactor Coolant System by the ECCS pumps. The NSWS is designed to perform its function with a single failure of any active component, assuming the loss of offsite power.

The NSWS, in conjunction with the CCW System, also cools the unit from residual heat removal (RHR), as discussed in the UFSAR, Section 5.4 (Ref. 3), from RHR entry conditions to MODE 5 during normal and post accident operations. The time required for this evolution is a function of the number of CCW and RHR System trains that are operating. Thirty six hours after a trip from RTP, one NSWS train is sufficient to remove decay heat during subsequent operations in MODES 5 and 6. This assumes a maximum NSWS temperature, a simultaneous design basis event on the other unit, and the loss of offsite power.

The NSWS satisfies Criterion 3 of 10 CFR 50.36 (Ref. 4).

LCO

Two NSWS trains are required to be OPERABLE to provide the required redundancy to ensure that the system functions to remove post accident heat loads, assuming that the worst case single active failure occurs coincident with the loss of offsite power.

While the NSWS is operating in the normal dual supply header alignment, an NSWS train is considered OPERABLE during MODES 1, 2, 3, and 4 when:

a. 1. Both NSWS pumps on the NSWS loop are OPERABLE; or

2. One unit's NSWS pump is OPERABLE and one unit's flowpath to the non essential header, AFW pumps, and Containment Spray heat exchangers are isolated (or equivalent flow restrictions); and

b. The associated piping, valves, and instrumentation and controls required to perform the safety related function are OPERABLE.

BASES

LCO (continued)

While the NSWS is operating in the single supply header alignment, one of the supply headers is removed from service in support of planned maintenance or modification activities associated with the supply header that is taken out of service. In this configuration, each NSWS train is considered OPERABLE with the required NSWS flow to safety related equipment being fed through the remaining OPERABLE NSWS supply header. While the NSWS is operating in the single supply header alignment, an NSWS train is considered OPERABLE during MODES 1, 2, 3, and 4 when:

a. The associated train related NSWS pumps are OPERABLE; and

b. The associated piping (except for the supply header that is taken out of service), valves, and instrumentation and controls required to perform the safety related function are OPERABLE.

The NSWS system is shared between the two units. The shared portions of the system must be OPERABLE for each unit when that unit is in the MODE of Applicability. Additionally, both normal and emergency power for shared components must also be OPERABLE. If a shared NSWS component becomes inoperable, or normal or emergency power to shared components becomes inoperable, then the Required Actions of this LCO must be entered independently for each unit that is in the MODE of applicability of the LCO, except as noted in a.2 above for operation in the normal dual supply header alignment. In this case, sufficient flow is available, however, this configuration results in inoperabilities within other required systems on one unit and the associated Required Actions must be entered. Use of a NSWS pump and associated diesel generator on a shutdown unit to support continued operation (> 72 hours) of a unit with an inoperable NSWS pump is not allowed.

APPLICABILITY

In MODES 1, 2, 3, and 4, the NSWS is a normally operating system that is required to support the OPERABILITY of the equipment serviced by the NSWS and required to be OPERABLE in these MODES.

In MODES 5 and 6, the requirements of the NSWS are determined by the systems it supports.

BASES

ACTIONS

A.1

If one NSWS train is inoperable, action must be taken to restore OPERABLE status within 72 hours. In this Condition, the remaining OPERABLE NSWS train is adequate to perform the heat removal function. However, the overall reliability is reduced because a single failure in the OPERABLE NSWS train could result in loss of NSWS function. Due to the shared nature of the NSWS, both units are required to enter a 72 hour Action when a NSWS Train becomes inoperable on either unit. Required Action A.1 is modified by two Notes. The first Note indicates that the applicable Conditions and Required Actions of LCO 3.8.1, "AC Sources—Operating," should be entered if an inoperable NSWS train results in an inoperable emergency diesel generator. The second Note indicates that the applicable Conditions and Required Actions of LCO 3.4.6, "RCS Loops—MODE 4," should be entered if an inoperable NSWS train results in an inoperable decay heat removal train (RHR). An example of when these Notes should be applied is with both units' loop 'A' NSWS pumps inoperable, both units' 'A' emergency diesel generators and both units' 'A' RHR systems should be declared inoperable and appropriate Actions entered. This is an exception to LCO 3.0.6 and ensures the proper actions are taken for these components. The 72 hour Completion Time is based on the redundant capabilities afforded by the OPERABLE train, and the low probability of a DBA occurring during this time period.

B.1

If one NSWS supply header is inoperable due to the NSWS being aligned for single supply header operation, the NSWS supply header must be restored to OPERABLE status within 35 days. Dual supply header operation is the normal alignment of the NSWS. Condition B is only allowed to be entered in support of planned maintenance or modification activities associated with the supply header that is taken out of service. Entry into this Condition is not allowed in response to unplanned events (e.g., a component failure) or for other events involving the NSWS. For unplanned events or other events involving the NSWS, Condition A must be entered. The Completion Time of 35 days is supported by probabilistic risk analysis. While in Condition B, the single supply header is adequate to perform the heat removal function for all required safety related equipment for both safety trains. Due to the shared nature of the NSWS, both units are required to enter this Condition when the NSWS is aligned for single supply header operation.

BASES

ACTIONS (continued)

In order to prevent the potential for NSWS pump runout, the single NSWS pump flow balance alignment cannot be utilized while the NSWS is aligned for single supply header operation.

Condition B is modified by two Notes. Note 1 requires immediate entry into Condition A of this LCO if one or more NSWS components become inoperable while in this Condition and one NSWS train remains OPERABLE. With one remaining OPERABLE NSWS train, the NSWS can still perform its safety related function. However, with one inoperable NSWS train, the NSWS cannot be assured of performing its safety related function in the event of a single failure of another NSWS component. The most limiting single failure is the failure of an NSWS pit to automatically transfer from Lake Wylie to the SNSWP during a seismic event. While the loss of any NSWS component subject to the requirements of this LCO can result in the entry into Condition A, the most common example is the inoperability of an NSWS pump. This occurs during periodic testing of the emergency diesel generators. Inoperability of an emergency diesel generator renders its associated NSWS pump inoperable. Note 2 requires immediate entry into LCO 3.0.3 if one or more NSWS components become inoperable while in this Condition and no NSWS train remains OPERABLE. In this case, the NSWS cannot perform its safety related function.

C.1 and C.2

If the NSWS train cannot be restored to OPERABLE status within the associated Completion Time, or if the NSWS supply header cannot be restored to OPERABLE status within the associated Completion Time, the unit must be placed in a MODE in which the LCO does not apply. To achieve this status, the unit must be placed in at least MODE 3 within 6 hours and in MODE 5 within 36 hours.

The allowed Completion Times are reasonable, based on operating experience, to reach the required unit conditions from full power conditions in an orderly manner and without challenging unit systems.

BASES

SURVEILLANCE REQUIREMENTS

SR 3.7.8.1

This SR is modified by a Note indicating that the isolation of the NSWS components or systems may render those components inoperable, but does not affect the OPERABILITY of the NSWS.

Verifying the correct alignment for manual, power operated, and automatic valves in the NSWS flow path provides assurance that the proper flow paths exist for NSWS operation. This SR does not apply to valves that are locked, sealed, or otherwise secured in position, since they are verified to be in the correct position prior to being locked, sealed, or secured. This SR does not require any testing or valve manipulation; rather, it involves verification that those valves capable of being mispositioned are in the correct position. This SR does not apply to valves that cannot be inadvertently misaligned, such as check valves. The 31 day Frequency is based on engineering judgment, is consistent with the procedural controls governing valve operation, and ensures correct valve positions.

SR 3.7.8.2

This SR verifies proper automatic operation of the NSWS valves on an actual or simulated actuation signal. The signals that cause the actuation are from Safety Injection and Phase 'B' isolation. The NSWS is a normally operating system that cannot be fully actuated as part of normal testing. This Surveillance is not required for valves that are locked, sealed, or otherwise secured in the required position under administrative controls. The 18 month Frequency is based on the need to perform this Surveillance under the conditions that apply during a unit outage and the potential for an unplanned transient if the Surveillance were performed with the reactor at power. Operating experience has shown that these components usually pass the Surveillance when performed at the 18 month Frequency. Therefore, the Frequency is acceptable from a reliability standpoint.

This SR is modified by a Note that states that the SR is not required to be met for valves that are maintained in position to support NSWS single supply header operation. When the NSWS is placed in this alignment, certain automatic valves in the system are maintained in position and will not automatically reposition in response to an actuation signal while the NSWS is in this alignment.

BASES

SURVEILLANCE REQUIREMENTS (continued)

SR 3.7.8.3

This SR verifies proper automatic operation of the NSWS pumps on an actual or simulated actuation signal. The signals that cause the actuation are from Safety Injection and Loss of Offsite Power. The NSWS is a normally operating system that cannot be fully actuated as part of normal testing during normal operation. The 18 month Frequency is based on the need to perform this Surveillance under the conditions that apply during a unit outage and the potential for an unplanned transient if the Surveillance were performed with the reactor at power. Operating experience has shown that these components usually pass the Surveillance when performed at the 18 month Frequency. Therefore, the Frequency is acceptable from a reliability standpoint.

REFERENCES

1. UFSAR, Section 9.2.
2. UFSAR, Section 6.2.
3. UFSAR, Section 5.4.
4. 10 CFR 50.36, Technical Specifications, (c)(2)(ii).

ATTACHMENT 3

BACKGROUND, DESCRIPTION OF PROPOSED CHANGES, AND TECHNICAL JUSTIFICATION

Background

The Nuclear Service Water System (NSWS), including Lake Wylie and the Standby Nuclear Service Water Pond (SNSWP), is the ultimate heat sink for various QA Condition 1 heat loads during normal operation, design basis events, and other design events as dictated by Catawba licensing criteria.

During normal operation the NSWS supplies cooling water to various safety related and non-safety related components. During design basis events, the NSWS is required to support Emergency Core Cooling System (ECCS) operation by providing cooling water to various safety related components along with emergency makeup to selected QA Condition 1 systems. The design basis event which imposes the most stringent requirement on the NSWS is the Loss of Coolant Accident (LOCA). In accordance with 10 CFR 50, Appendix A, General Design Criterion (GDC) 2 (Design bases for protection against natural phenomena), Catawba must withstand the effects of a Safe Shutdown Earthquake (SSE) without affecting the ability of the safety systems to shut down the plant. As such, the design basis events are considered after the occurrence of an SSE. This means that a loss of Lake Wylie and a dual unit Loss of Offsite Power (LOOP) are assumed.

Additional licensing criteria design events include loss of the main control room, fire, and security events. Each of these events imposes specific requirements on the function of the NSWS and each was evaluated with respect to single supply header operation.

NSWS Description

Two bodies of water serve as the ultimate heat sink for the components cooled by the NSWS. Lake Wylie is the normal source of nuclear service water. A single transport line conveys water from a seismic Category 1 intake structure at the bottom of the lake to both the A and B pits of the NSWS pumphouse serving the NSWS pumps in operation. Isolation of each line is assured by two valves in series and fitted with electric motor operators powered from separate power supplies. Should Lake Wylie be lost due to a seismic event in excess of the design of Wylie Dam, the SNSWP, formed by the seismic Category 1 SNSWP Dam, contains sufficient water to bring the station safely to a cold shutdown condition under all normal, transient, and accident conditions. The SNSWP has a seismic Category 1 intake structure, with two ASME Section III, Class 3 seismic, redundant lines to transport water independently to each pit in the pumphouse.

Each line is secured by a single motor operated valve. Automatically upon loss of Lake Wylie (as detected by NSWS pump pit level instrumentation), Lake Wylie double isolation valves are closed and the SNSWP valves are opened to both pit A and pit B.

Each pit in the seismic Category 1 pumphouse is capable of passing the flow needed for both normal and required accident conditions. Flow spreaders in front of all the intake pipe entrances prevent vortices and flow irregularities while removable lattice screens protect the NSWS pumps from solid objects. Pumps 1A and 2A take suction from pit A and discharge through strainers 1A and 2A, respectively. Pumps 1B and 2B take suction from pit B and discharge through strainers 1B and 2B, respectively. The outlet piping of the respective train's strainers then join back together to form the train A and B supply lines to train A and B components in both units. Outside the auxiliary building wall, the train A supply line splits, with the 1A supply header entering on the Unit 1 side, and the 2A supply header entering on the Unit 2 side. Likewise, the train B supply line splits, with the 1B supply header entering on the Unit 1 side, and the 2B supply header entering on the Unit 2 side. The supply and return headers are arranged and fitted with isolation valves such that a critical crack in either header can be isolated and will not jeopardize the safety functions of this system or flood out other safety related equipment. The operation of any two pumps on either or both supply lines is sufficient to supply all cooling water requirements for unit startup, cooldown, refueling, and post-accident operation of two units. However, one pump has sufficient capacity to supply all cooling water requirements during normal power operation of both units or during post-accident conditions if the unaffected unit is already in cold shutdown. All pumps (two per unit) are started during the hypothetical combined accident and loss of normal power. In an accident, the safety injection signal automatically starts both pumps on each unit, thus providing complete redundancy. If a diesel generator (or a NSWS pump) is out of service for an extended period of time, such that its associated unit is in cold shutdown, then one pump is sufficient to provide adequate cooling water requirements for the operating unit and to maintain the other unit in cold shutdown in the event of a hypothetical combined accident and loss of normal power. The NSWS design basis is for operation under the worst initial conditions of operation. This condition is assumed to be the low probability combination of a LOCA on one unit, a LOOP on both units, extended shutdown of the other unit,

loss of the downstream dam, and a prolonged drought and hot weather and its effect on the SNSWP.

Nuclear Service Water supplied by the NSWS is used in both units to supply essential and non-essential cooling water needs or as an assured source of water for certain safety related systems. Essential components are those necessary for safe shutdown of the units, and are designed with redundancy in order to meet single failure criteria. Non-essential components are not necessary for safe shutdown of the units, and are not designed with redundancy. Each unit has two trains of essential heat exchangers, designated train A and train B, and one train of non-essential ventilation heat exchangers, supplied from either train A or train B and isolated on an Engineered Safety Features actuation.

There are two main discharge headers, extending the width of the auxiliary building, with the 1A and 2A components returning flow to the train A header, and the 1B and 2B components returning flow to the train B header. During normal station operation, when the NSWS pumps are taking suction from Lake Wylie, discharge crossover valves are open, and all heat exchangers in operation discharge through the train A return to Lake Wylie via the Low Pressure Service Water discharge. Automatically upon emergency low pumphouse pit level (as in the loss of Lake Wylie), double isolation valves close on the return line to Lake Wylie, double isolation valves close on the discharge header crossover, and single isolation valves open on each train's return to the SNSWP. This sequence, along with isolation of the non-essential header and the supply header crossover valves, ensures two independent, redundant supplies and returns, satisfying single failure criteria. The non-essential header double isolation valves will only isolate on a Phase B signal (a Phase B signal isolates the Component Cooling Water System and the NSWS), not on an emergency low pumphouse pit level. An emergency low pumphouse pit level effectively isolates the non-essential header supply by closing the essential supply header crossovers. NSWS piping in each diesel generator building also has discharge isolation valves that are aligned from Lake Wylie discharge to SNSWP discharge on the same signals which cause the auxiliary building headers to align to the SNSWP. The discharge lines to the SNSWP split and discharge flow to each "finger" of the SNSWP to assure that surface cooling will occur in all areas of the pond. An orifice is installed to create a pressure drop in the shorter of the two discharge lines to divert flow to the longer of the

discharge lines and assure surface cooling over the entire SNSWP.

Figure 1 is a depiction of the existing (dual header) configuration of the NSWS. (Note that all figures contained within this submittal are not drawn to scale.)

Figure 1

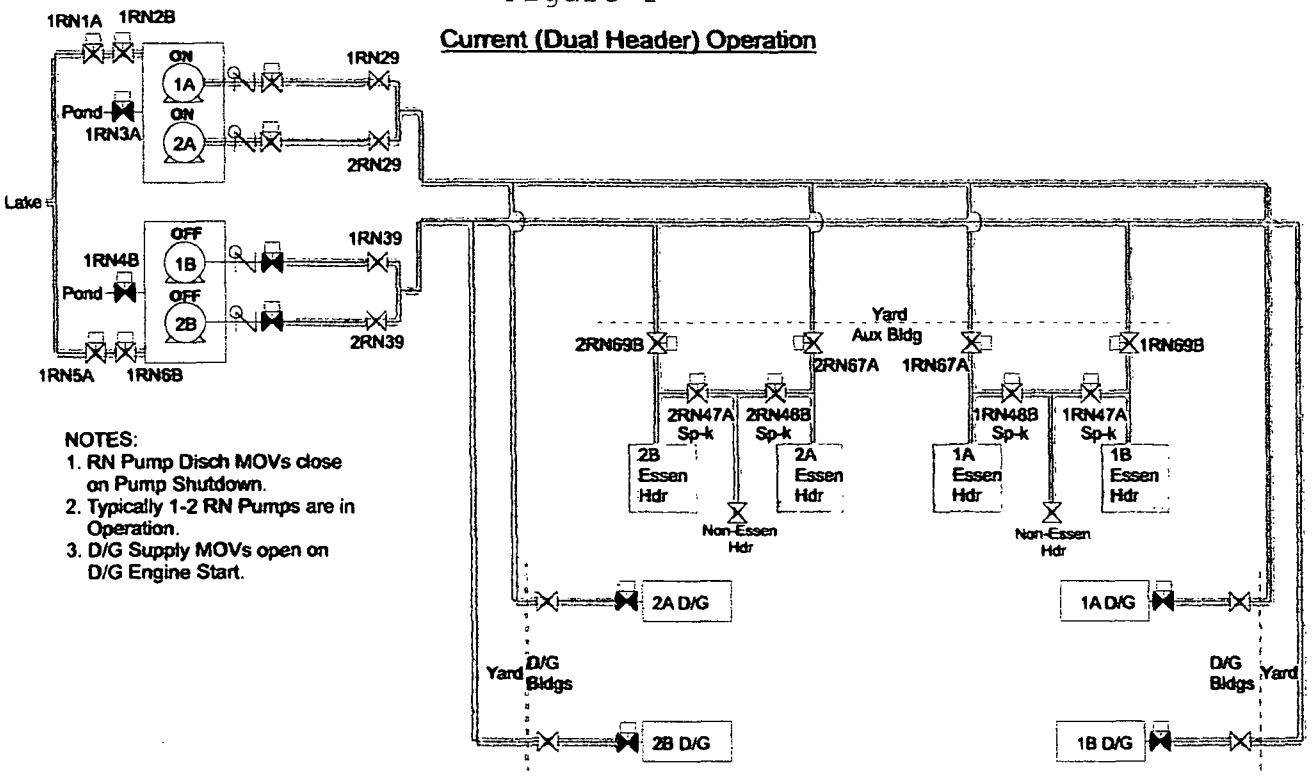

Description of Proposed Changes

The NSWS single supply header operation proposal involves physical modifications to the system to install crossover piping between trains of supply piping at the pumphouse, in the auxiliary building, and in the diesel generator buildings. During single supply header operation, the system is aligned to direct all flow through one of the two headers exiting the pumphouse, allowing the other header to be removed from service. This alignment redirects flow to each unit's train A and train B headers just inside the auxiliary building and just inside each unit's diesel generator buildings.

Figure 2 is a depiction of the proposed (single supply header) configuration of the NSWS. (Note that all figures contained within this submittal are not drawn to scale.)

Figure 2

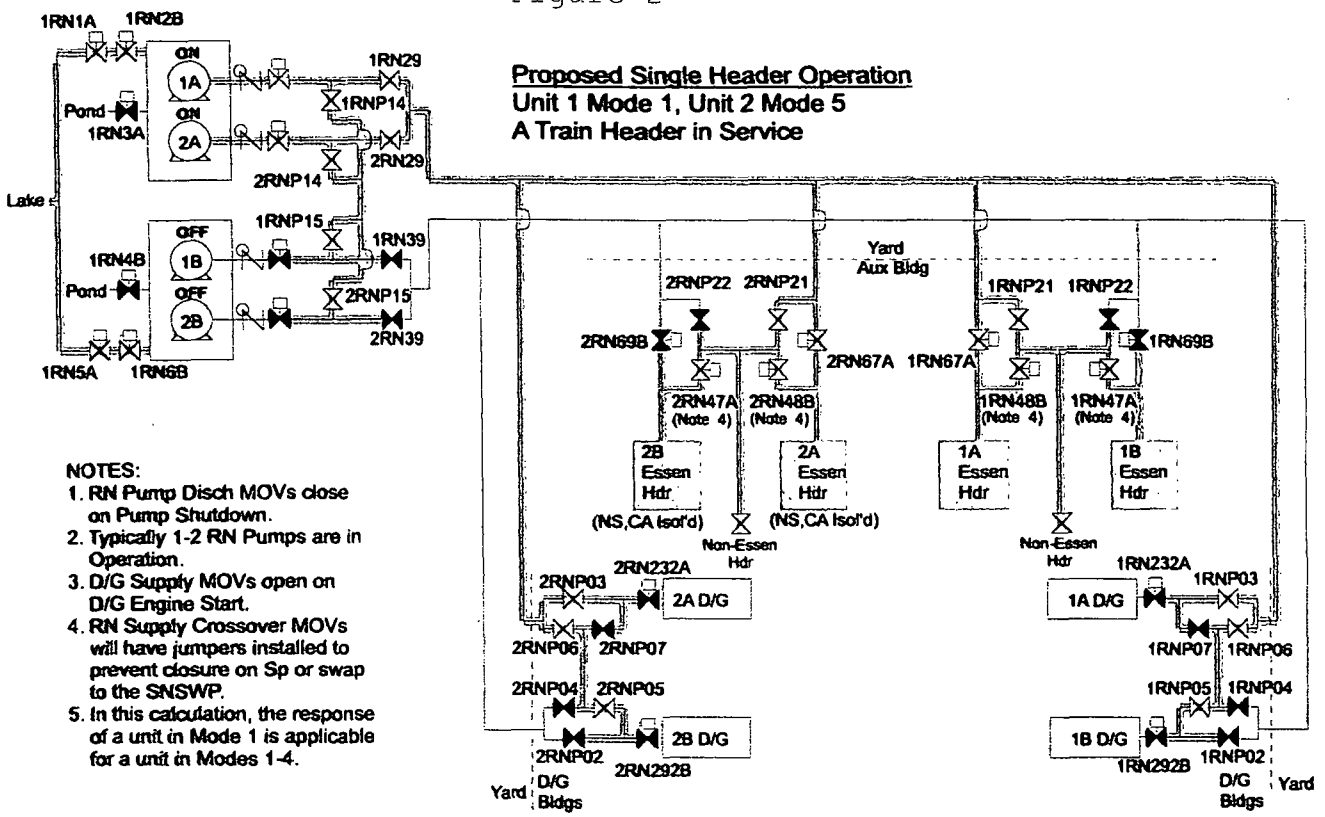

TS 3.7.8 governs the NSWS. Limiting Condition for Operation (LCO) 3.7.8 requires two NSWS trains to be operable for each unit that is in Mode 1, 2, 3, or 4. With one NSWS train inoperable (Condition A), the train must be restored to operable status within 72 hours. If this is not accomplished (Condition B), the unit must be in Mode 3 within 6 hours and in Mode 5 within 36 hours.

TS 3.7.8 is proposed to be modified by adding new Condition B, which governs single supply header operation. New Condition B allows for a 35 day Completion Time while in this alignment. At the end of the 35 day Completion Time, the NSWS must be restored to dual supply header operation. New Condition B is modified by two notes. Note 1 requires the immediate entry into Condition A of this LCO if one or more NSWS components become inoperable while in this Condition and one NSWS train remains operable. Note 2 requires the immediate entry into LCO 3.0.3 if one or more NSWS components become inoperable while in this Condition and no NSWS train remains operable. Existing Condition B is

editorially revised to become Condition C in order to reflect the addition of new Condition B. Also, existing obsolete footnotes related to one-time changes involving the NSWS have been deleted. Finally, Surveillance Requirement 3.7.8.2 is revised by adding a note that states that the surveillance is not required to be met for valves that are maintained in position to support NSWS single supply header operation. Appropriate corresponding changes have been made to the TS 3.7.8 Bases to reflect these proposed TS changes.

Technical Justification

Discussion of GDC Requirements

10 CFR 50, Appendix A, GDC 44 (Cooling water) states:

"A system to transfer heat from structures, systems, and components important to safety, to an ultimate heat sink shall be provided. The system safety function shall be to transfer the combined heat load of these structures, systems, and components under normal operating and accident conditions.

Suitable redundancy in components and features, and suitable interconnections, leak detection, and isolation capabilities shall be provided to assure that for onsite electric power system operation (assuming offsite power is not available) and for offsite electric power system operation (assuming onsite power is not available) the system safety function can be accomplished, assuming a single failure."

In order to support single supply header operation in the auxiliary building and the diesel generator buildings, design changes will be implemented to install crossover piping as shown in Figure 2. This alignment will supply cooling water flow to both trains of both units from the single in-service header. During the response to a LOCA or a loss of NSWS pit level, both trains will remain in service and cross connected. (This is contrary to the existing response to these events where the two trains automatically separate on the affected unit during a LOCA (S_p signal) or separate completely on a swapover to the SNSWP.)

The concept of automatically separating trains in single supply header operation cannot apply, since both trains will be connected at several locations within the NSWS. In the

existing configuration, the protection provided by separating trains ensures that adequate equipment is operating to perform its design basis function. This protects against a failure such as a leak or a diversion of flow on one train from affecting the other train. For design basis events, the failures that must be considered are a single active failure or a single passive failure. The single supply header operation scheme of allowing the two trains to remain connected following a LOCA or a loss of NSWS pit level is acceptable provided design basis functions can still be met assuming a single failure in conjunction with a design basis event.

Active failures were evaluated in a single failure analysis of the NSWS. The most limiting active failure is the loss of a NSWS pit due to the failure of valve 1RN3A or 1RN4B to open following the loss of Lake Wylie. This failure takes out the pit and thus both pumps on that train are not available. Other active failures such as a failure of a diesel generator to start result in only the loss of one pump and are of lesser consequence. No single active failure can be postulated that would result in a leak or a significant diversion of flow that would affect the ability of the essential headers to provide the required flow to essential components.

In single supply header operation following a loss of both NSWS pumps in a pit during a design basis event (LOCA) on one unit, two pumps will provide flow to all four essential headers and to all four diesel generators. Adequate flow must be provided in this condition to support the LOCA loads of one unit and the shutdown loads of the other unit. Flow modeling indicates this is acceptable, and therefore the NSWS can meet its design basis requirements during single supply header operation assuming an active failure.

Passive failures are described in ANSI/ANS-58.9-1981, "Single Failure Criteria for Light Water Reactor Safety-Related Fluid Systems" and in the Catawba Updated Final Safety Analysis Report (UFSAR). Passive failures take the form of external piping leakage or internal failures such as a valve stem/disc separation that may restrict flow. The design flow for a passive failure is defined by analysis of realistic passive failure mechanisms in the system, considering conditions of operation and possible failure or leakage modes, as appropriate.

External leakage passive failures are limited in flowrate by consideration of only credible failures such as flange or packing leaks. ANSI/ANS-58.9-1981 states: "*The design flow*

for a passive failure shall be defined by analysis of realistic passive failure mechanisms in the system, considering conditions of operation and possible failure or leakage modes, as appropriate. ... As an example....a review ... may result in the definition of a design leak rate for passive-failure evaluation based on maximum flow through a failed valve packing or pump mechanical seal." Section 6.3.2.5 of the Catawba UFSAR (ECCS Reliability) uses this approach to limit the flowrate assumption of a passive failure leak of the ECCS piping outside of containment to 50 gpm. This is based on (1) provisions for visual inspection and leak detection to detect leaks before they propagate to major proportions, (2) an evaluation indicating the largest potential sudden leak is a 50 gpm failure of a pump shaft seal, and (3) larger leaks in the ECCS are deemed non-credible due to ECCS piping QA classification, seismic design, location, testing, inspection, and material.

A similar position can be taken concerning the maximum passive failure leakrate from NSWS piping. A review of components on the NSWS supply header between the pumphouse and the first isolation valves in the auxiliary building and the diesel generator buildings has been performed. This section of piping must remain in service and pressurized to provide flow to each unit's essential headers. The value for maximum credible external passive failure leakage is 50 gpm, which bounds the calculated packing leakage rate through the 30-inch butterfly valves located just inside the auxiliary building wall.

With this amount of continuous leakage, the NSWS can still provide adequate flow to all essential components. Also, it can be shown that the long-term diversion of flow from returning to the SNSWP can be tolerated without a significant loss of level in the SNSWP. This consideration is required since following a loss of Lake Wylie, the NSWS will be aligned to the SNSWP on a long-term basis.

From a flooding standpoint, the auxiliary building is provided with four nuclear safety related sump pumps that can mitigate a continuous leak of greater than 50 gpm. In response to a 50 gpm leak, Section 6.3.2.5 of the UFSAR states that "... Assuming none of the RHRS and Containment Spray System room sump pumps are operating, the operator has at least 30 minutes from receipt of the high level alarm to isolate the passive failure and prevent the sump from overflowing. However, with only one of the four Nuclear Safety Related sump pumps operating, the pump down rate exceeds the leakage rate." These pumps can be credited for

mitigating the 50 gpm maximum credible passive failure NSWS external leakage in the auxiliary building.

For the external leak passive failure flooding consideration of the diesel generator rooms, each diesel generator is provided with a sump and with two nuclear safety related sump pumps. Each sump pump has a 50 gpm capacity. These pumps have adequate capacity to provide long-term mitigation of an external leak passive failure in a diesel generator room. Similar to the auxiliary building piping, the maximum assumed value for credible external passive failure leakage in the diesel generator rooms is 50 gpm. This is conservative compared to the auxiliary building leakage, as the diesel generator room credible source is a packing leak through a smaller 10-inch Fisher butterfly valve. (Currently, the sump pump capability for Unit 1 is not functional. This has no effect on the operability of the Unit 1 diesel generators. Prior to utilizing the TS Condition governing single supply header operation, it will be verified that the sump pump capability for Unit 1 is functional.)

For a passive failure external leak in the auxiliary building while in single supply header operation, the NSWS was shown to still be capable of meeting its design requirements even though train separation will not occur. For the existing dual header design, train separation ensures that a leak on one train does not result in diverting flow to the point where essential equipment on the other train does not receive adequate flow. It also allows the leak to be stopped by shutting off the pumps in the faulted train. In single supply header operation, passive failure leaks will not divert enough flow to starve essential equipment. Also, the amount of postulated leakage can be tolerated on a long-term basis without affecting the function of the NSWS or the ultimate heat sink.

Further, the amount of piping for which a long-term leak may have to be tolerated has been minimized by design changes which have provided isolation valves just inside the auxiliary building wall. A similar isolation valve configuration has been provided for piping in the diesel generator buildings.

The following Design Changes added the noted valves during the 14-day allowed outage times in January 2006:

CD500175 - (auxiliary building supply header isolation valves)
CD100064 - (1A, 1B diesel generator isolation valves)

CD200141 - (2A, 2B diesel generator isolation valves)

These Design Changes will permit the manual isolation of downstream external leaks on one essential header while allowing the other essential header to remain in service. The amount of common supply header piping that cannot be isolated was minimized by locating the first isolation valves as close as possible to the auxiliary building and the diesel generator building walls.

Internal blockage passive failures involve the structural failure of a component. ANSI/ANS-58.9-1981 states: " ... *A passive failure is a failure of a component to maintain its structural integrity or the blockage of a process flow path. Blockage of a process flow path could occur, for example, due to the separation of a valve disc from its stem....The design flow for a passive failure shall be defined by analysis of realistic passive failure mechanisms in the system, considering conditions of operation and possible failure or leakage modes, as appropriate."*

Piping design changes have been made to provide a crossover header inside the auxiliary building such that no valve is located where an internal failure could result in blockage to both essential trains. The piping from each header branches just inside the auxiliary building to provide separate flow paths to each train. Valves are located just after the branch in order to allow isolation should leaks or ruptures occur downstream. A similar crossover configuration will be installed for piping in the diesel generator buildings.

The following Design Changes added the noted crossover piping and valves in the auxiliary building:

CD100139 - (Unit 1 auxiliary building crossover piping) - installed in the Unit 1 end-of-cycle 16 refueling outage
CD200108 - (Unit 2 auxiliary building crossover piping) - installed in the Unit 2 end-of-cycle 14 refueling outage
CD500175 - (auxiliary building supply header isolation valves)
CD501362 - (addition of an automatic closure of valves 1RN49A and 2RN50B on low pit level) - to be installed in 2008

The following Design Changes will add the noted crossover piping in the diesel generator buildings:

CD100106 - (Unit 1 diesel generator building crossover) - to be installed in 2007

CD200154 - (Unit 2 diesel generator building crossover) - to be installed in 2007

The following Design Changes added isolation valves as part of the crossover configuration in the diesel generator buildings:

CD100064 - (1A, 1B diesel generator isolation valves)
CD200141 - (2A, 2B diesel generator isolation valves)

Passive failure analysis of the NSWS is discussed in Table 9-4 of the UFSAR. A failure of NSWS pump 1A and 2A discharge piping to heat exchangers is considered. The relevant malfunction is "Rupture or Plug". The consequential action is to utilize the alternate train. During single supply header operation, the section of supply header piping from the pumphouse to the auxiliary building will carry all the flow for both trains and the alternate header may not be immediately available. As described above, a rupture or leak of this piping will be limited and tolerable from a flow standpoint. The plugging or blockage of this part of the piping is not considered credible, as there are no components with internal parts in this piping. In addition, since the internal pressure of this piping exceeds soil pressure, plugging from collapse of the piping is also not credible. Passive failures of NSWS piping located in the auxiliary building may be isolated and repaired, depending upon the failure location.

The internal failure of a relief valve or a butterfly valve could result in the sudden release of flow. Industry standards, including ANSI/ANS-58.9-1981 do not discuss a failure involving the unwanted opening of a closed valve, but do discuss blockage caused by the internal failure of a valve. ANSI/ANS-58.9-1981 also states that the design flow for a passive failure shall be defined by analysis of realistic passive failure mechanisms in the system, considering conditions of operation and possible failure or leakage modes, as appropriate. An analysis of the NSWS butterfly valves used for single supply header operation was performed to determine if a failure of the valves was credible. Catastrophic failure of the NSWS butterfly valves resulting in the sudden release of flow is not a credible failure mode. The only credible failure mode for these valves is the eventual degradation of the wear parts (i.e., packing and seats) that would result in a small amount of leakage that would not have a measurable impact on NSWS flow to essential components or on ultimate heat sink inventory. Passive failure due to packing leakage has been quantified at less than 50 gpm and seat leakage will be evaluated on a

case-by-case basis under Catawba's corrective action program.

Additionally, the single supply header alignment has been designed with a second isolation valve that could be closed to isolate the leakage flow without having to shut down flow to redundant trains of essential headers. This is applicable for the following three cases:

- During single supply header operation, the out-of-service supply header will be isolated from the in-service supply header by a single valve at the auxiliary building and the diesel generator building crossovers. In the case of leakage through one of these valves, the proposed crossover configuration would allow closure of an additional valve to isolate the leak while keeping one essential header in service.

- At the pumphouse, one NSWS strainer discharge on each shared train has a 20-inch branch line with a butterfly drain valve that is connected to a 20-inch backwash/drain header. The backwash/drain header discharges directly to Lake Wylie. During single supply header operation, a failure involving full flow leakby of the in-service drain valve could divert enough flow to affect the operability of both NSWS trains. Also, this leakage flow could not be stopped without shutting off all NSWS pumps. Because of this consideration, current plans include the addition of a manual butterfly valve on the common backwash/drain line just inside the pumphouse. In the event that one of the 20-inch backwash valves were to fail open, the additional manual valve would ensure isolation of the potential leak flow.

  The following Design Change will add the additional manual butterfly valve to the backwash line:

  CD500091 - (NSWS pumphouse crossover) - to be installed in the Unit 1 end-of-cycle 17 refueling outage

- Each NSWS strainer discharge line has a manual butterfly isolation valve which is used to isolate the out-of-service header during single supply header operation. A failure of one of these valves could be isolated by closing manual valves in the pumphouse crossover header to isolate the leak.

In summary, ANSI/ANS-58.9-1981 states that "... *passive failure shall be defined by analysis of realistic passive failure mechanisms...*". Analysis demonstrated that the catastrophic failure of the NSWS butterfly valves resulting in the sudden release of flow is not a credible failure mode. Also, with the addition of a manual butterfly valve as described in the second bullet above, the NSWS has been designed with the capability of isolating failures with manual action to close specific valves based on the location of the failure.

10 CFR 50, Appendix A, GDC 4 (Environmental and dynamic effects design bases) states:

"Structures, systems, and components important to safety shall be designed to accommodate the effects of and to be compatible with the environmental conditions associated with normal operation, maintenance, testing, and postulated accidents, including loss-of-coolant accidents. These structures, systems, and components shall be appropriately protected against dynamic effects, including the effects of missiles, pipe whipping, and discharging fluids, that may result from equipment failures and from events and conditions outside the nuclear power unit. However, dynamic effects associated with postulated pipe ruptures in nuclear power units may be excluded from the design basis when analyses reviewed and approved by the Commission demonstrate that the probability of fluid system piping rupture is extremely low under conditions consistent with the design basis for the piping."

Single supply header operation requires the evaluation of the response of the NSWS to pipe rupture events. The requirements of this GDC are elaborated in Sections 3.6.1 and 3.6.2 of NUREG-0800, Revision 1, "Standard Review Plan for the Review of Safety Analysis Reports For Nuclear Power Plants." In particular, relevant discussion pertaining to this GDC is contained in Branch Technical Position MEB 3-1.

The NSWS is considered to be moderate energy piping and subject to the requirements for postulating breaks of moderate energy piping. This Branch Technical Position specifies the required through-wall leak size to postulate. In addition, locations are specified at which moderate energy leaks should be postulated. The Catawba licensing basis for pipe rupture complies with NUREG-0800, Revision 1 and is contained in the UFSAR.

It is necessary to postulate pipe ruptures on moderate energy piping with the plant initially in normal operation. A subsequent failure of an active component is assumed which may hinder the mitigation of the leak. Pipe ruptures are considered the initiating events and concurrent design basis events are not required to be considered (unless they result from the pipe rupture).

Single supply header operation affects the pipe rupture analysis similar to the way it affects design basis event single passive failures. For postulated pipe ruptures on the in-service supply header piping, the leakage will have to be tolerated on a long-term basis. Leakage rates from postulated pipe ruptures are governed by the pressure in the pipe and the assumed crack size. The crack size is related to the diameter and wall thickness of the piping. The postulated leak rates for the NSWS piping applicable to this study are:

30-inch piping in the pumphouse	2400 gpm
42-inch piping in the auxiliary building	1898 gpm

From the standpoint of flow adequacy, it can be shown that the NSWS can provide adequate flow on a long-term basis to shut down the units concurrent with the above pipe ruptures and an active failure (such as the loss of one NSWS pump). Since the failure of Lake Wylie is not assumed, there will not be a long-term diversion of return flow to the SNSWP which could reduce inventory.

From a flooding standpoint, a through-wall leak in the pumphouse piping is easily tolerated, as the postulated leak cannot outrun the natural drainage capacity back to the pits.

Also, a through-wall leak on in-service NSWS header piping in the yard will not result in yard flooding that could damage equipment important to safety.

For the flooding concerns of a through-wall leak on the 30-inch piping in the auxiliary building, two cases need to be considered:

- If the break is downstream of the first isolation valves inside the auxiliary building, then these valves may be locally closed to isolate the leak. This is similar to the existing response, as the operators must recognize the leak and take action to stop it. With the current configuration, the option exists to isolate the headers manually from the control room using motor-

operated valves, and then shutting down the NSWS pumps on the affected train. In single supply header operation, the leaking pipe could be isolated by locally closing the appropriate isolation valve just inside the auxiliary building. If the break is on branch connections to individual essential components, the leak could be isolated by closing isolation valves on the branch connections. 30 minutes is assumed for operator action to recognize and stop the leakage of water. However, the timeframe for required operator action based on auxiliary building holdup capacity is in excess of 90 minutes.

The use of the 30-inch supply header isolation valves to isolate the downstream essential piping or to isolate individual branch connections is judged to be an acceptable means of mitigating a leak. The limited size of the moderate energy piping crack would not preclude access to the area. The manual operation of these valves to isolate leaking piping is not considered to be subject to the active failure which is considered in conjunction with the postulated leak. These valves are reliable, safety related, and constructed with corrosion resistant materials.

- If the postulated break is between the auxiliary building wall and the first isolation valves inside the auxiliary building, there will be no way to isolate the leak without shutting down all NSWS pumps. This would stop all NSWS flow to both trains of both units. In order to avoid the consideration of a moderate energy pipe break in this section, the reliability of the piping was increased by designing pipe supports to minimize the predicted stress level and by the inclusion of this piping in Catawba's augmented inservice inspection program. In addition, the amount of piping in the auxiliary building that is not considered to be isolable has been minimized by the addition of manual isolation valves close to the auxiliary building wall.

  The following Design Changes redesigned supports to minimize stress of the piping just inside the auxiliary building wall:

  CD100139 - (Unit 1 auxiliary building crossover) - installed in the Unit 1 end-of-cycle 16 refueling outage

CD200108 - (Unit 2 auxiliary building crossover) - installed in the Unit 2 end-of-cycle 14 refueling outage

Per the UFSAR, through-wall leaks on moderate energy piping must be postulated at the following locations:

- At the terminal ends of the pressurized portions of the run.

- At intermediate pipe-to-fitting weld locations of potential high stress or fatigue (e.g., pipe fittings, valves, flanges, and welded attachments) that result in the maximum effects from fluid spraying, flooding, or environmental conditions. Cracks are not postulated at any intermediate location where the maximum stress is less than 0.4 (1.2Sh+Sa).

Engineering changes have been implemented to minimize the piping stress ratio to allow precluding postulated leaks on the intermediate weld locations as described in the second item above.

The location at the auxiliary building QQ column line where the 30-inch NSWS supply header piping enters the auxiliary building is considered to be a terminal end. As stated in the UFSAR, "Terminal ends are considered as piping originating at structures or components (such as vessel and equipment nozzles and structural piping anchors) that act as rigid constraint to the piping thermal expansion. Typically, the anchors assumed for the piping code stress analysis would be terminal ends." A case may be made for precluding the postulation of a moderate energy crack at this terminal end as follows:

1. The total resulting predicted bending moment forces on the piping at the QQ wall is reduced to a small amount by designing piping supports to achieve levels below the 0.4 (1.2Sh+Sa) value. This minimizes the possibility of any initiating force leading to a piping crack.

2. This piping penetrating the auxiliary building wall consists of a thicker wall than standard at the terminal end, as it is a continuation of NSWS buried piping. This piping was designed with a 1/2-inch wall thickness as compared to a 3/8-inch

wall thickness as this piping continues in the auxiliary building.

3. The piping at the auxiliary building wall, which has been precluded by Duke for pipe rupture consideration, will be included in the augmented inservice inspection program.

Design changes have been implemented to install a new crossover header just inside the auxiliary building wall for each unit's essential headers. This provides isolation valves as close as possible to the auxiliary building wall to allow isolation of the flow to one of the essential headers while keeping the other essential header in service. During single supply header operation, the total length of piping in the auxiliary building on the in-service header that cannot be isolated will only be approximately 14 feet per unit. This will minimize the possibility of an unisolable rupture occurring in the auxiliary building.

- The evaluation of a pipe rupture on the NSWS lines in the diesel generator buildings is similar to that for the piping in the auxiliary building. Design changes will provide a similar crossover line in the diesel generator buildings as in the auxiliary building. Just inside the diesel generator building wall, the 10-inch supply piping will branch and individual isolation valves will be provided for each line. If a pipe rupture were to occur, this will allow the isolation of the affected diesel generator, while maintaining flow to the other train's diesel generator.

  In order to avoid the consideration of a moderate energy pipe break in the unisolable piping section between the diesel generator building wall and the first isolation valves, the reliability of this piping has been increased by support design changes which reduced the postulated piping stress to minimal levels (in order to preclude a postulated leak in this piping section).

  The following Design Changes redesigned supports to minimize stress of the piping just inside the diesel generator building walls:

  CD100064 - (1A, 1B diesel generator isolation valves)
  CD200141 - (2A, 2B diesel generator isolation valves)

Operational and Single Failure Considerations

Assuming the use of the modified crossover header configuration as described above, this discussion addresses the acceptability of single supply header operation in several operational configurations and postulates various single failures. Table 1 below summarizes the application of the following initial conditions with the indicated events and failures. References are made to the appropriate supporting figures. (Note that all figures contained within this submittal are not drawn to scale. Also, note that the entries in Table 1 and the appropriate supporting figures are equally applicable for all possible unit number and train designation combinations.)

The operational and single failure considerations of Table 1 demonstrate that with the exception of the scenario described in Figure 9, the single supply header alignment meets all requirements of the plant safety analyses. The TS Bases for the NSWS have been proposed to be modified to preclude single supply header operation while in the configuration described in Figure 9 (the single pump balance alignment).

Table 1 Operational and Single Failure Considerations

Initial Condition(s)	Event	Single Failure	Comments
1. Dual header (normal) operations 2. Unit 1 - Mode 1 3. Unit 2 - Mode 1 4. All equipment operable	Unit 1 LOCA LOOP on both units Loss of Lake Wylie	Loss of Pit A 1RN3A fails to open	NSWS essential trains become isolated by closure of cross connects. This isolates NSWS cooling water to 1A and 2A diesel generators and NSWS Train 1A and 2A supplied essential components. No power is available to Train A essential equipment due to loss of Train A diesel generators. Refer to Figure 3.
1. Single header operations - Train A 2. Unit 1 - Mode 1 3. Unit 2 - Mode 1 4. All equipment operable	Unit 1 LOCA LOOP on both units Loss of Lake Wylie	Loss of Pit A 1RN3A fails to open	1. All four NSWS essential trains remain unisolated. 2. Two NSWS pumps have adequate capacity to supply the LOCA loads of one unit and the normal operation (Mode 1-4) loads of the other unit. 3. All four diesel generators receive cooling water and therefore all essential equipment is powered. Refer to Figure 4.
1. Dual header (normal) operations 2. Unit 1 - Mode 1 3. Unit 2 - Mode 5 4. All equipment operable	Unit 1 LOCA LOOP on both units Loss of Lake Wylie	Loss of Pit A 1RN3A fails to open	NSWS essential trains become isolated by closure of cross connects. This isolates NSWS cooling water to 1A and 2A diesel generators and NSWS Train 1A and 2A supplied essential components. No power is available to Train A essential equipment due to loss of Train A diesel generators. Refer to Figure 5.
1. Single header operations - Train A 2. Unit 1 - Mode 1 3. Unit 2 - Mode 5 4. All equipment operable	Unit 1 LOCA LOOP on both units Loss of Lake Wylie	Loss of Pit A 1RN3A fails to open	1. All four NSWS essential trains remain unisolated. 2. Adequate flow is assured by prior isolation of containment spray and auxiliary feedwater on the shutdown unit per the unit shutdown procedure and by isolation of the non-essential header on both units as a result of NSWS pit swapover. 3. All four diesel generators receive cooling water and therefore all essential equipment is powered. Refer to Figure 6.
1. Single header operations - Train A 2. Unit 1 - Mode 1 3. Unit 2 - Mode 5	Unit 1 LOCA LOOP on both units Loss of Lake Wylie	Loss of Pit B 1RN4B fails to open	In this case, Train B pit and pumps are unavailable instead of Train A. However, everything else (downstream) is available as with the Train A loss of pit (previous case).

4. All equipment operable			Refer to Figure 7.
1. Dual header (normal) operations 2. Unit 1 - Mode 1 3. Unit 2 - Mode 5 4. 2B NSWS pump, diesel generator out of service 5. Single pump balance	Unit 1 LOCA LOOP on both units Loss of Lake Wylie	Loss of Pit A 1RN3A fails to open	This alignment is used to allow work on the shutdown unit's diesel generator and NSWS pump during an outage. In this configuration, 2B containment spray and auxiliary feedwater are procedurally isolated prior to single pump balance. The resulting alignment leaves one pump providing cooling water to 1B LOCA loads and 2B shutdown cooling loads. With 2B diesel generator being isolated prior to the event, neither Unit 2 diesel generator will be available. This is expected, since single failure protection is not required in Mode 5 or below. Refer to Figure 8.
1. Single header operations - Train A 2. Unit 1 - Mode 1 3. Unit 2 - Mode 5 4. 2B NSWS pump, diesel generator out of service 5. Single pump balance	Unit 1 LOCA LOOP on both units Loss of Lake Wylie	Loss of Pit A 1RN3A fails to open	The single pump balance alignment is attempted to be used with single header operation. This scenario is not recommended. The issue is that the NSWS must be pre-aligned to the SNSWP. The problem is that in single header operation, the auxiliary building supply and return crossovers must remain open to prevent starving one of the essential headers. With a NSWS pump or diesel generator inoperable and a loss of pit occurring during pit swapover, the headers must be isolated to prevent runout of the single remaining pump. If the NSWS is pre-aligned to the SNSWP, the failure of a train during pit swapover is eliminated and a NSWS failure is limited to one NSWS pump. Operation on the SNSWP is not recommended as an initial condition for single supply header operation, as some pipe rupture scenarios involve tolerating a large amount of leak flow which may eventually impact SNSWP inventory. If this direction is chosen in the future, evaluation of long-term SNSWP impact or the ability to establish flow to Lake Wylie should be performed. Therefore, single supply header operation will not be utilized while in the single pump balance alignment. Refer to Figure 9.

Figure 3

Initial Conditions
Normal (Dual Header) Operation
Unit 1 Mode 1, Unit 2 Mode 1 (All Equip in Service)

Event
LOCA (Sp) Unit 1
LOOP Both Units
Loss of Lake Wylie
Single Failure: 1RN3A Fails to open

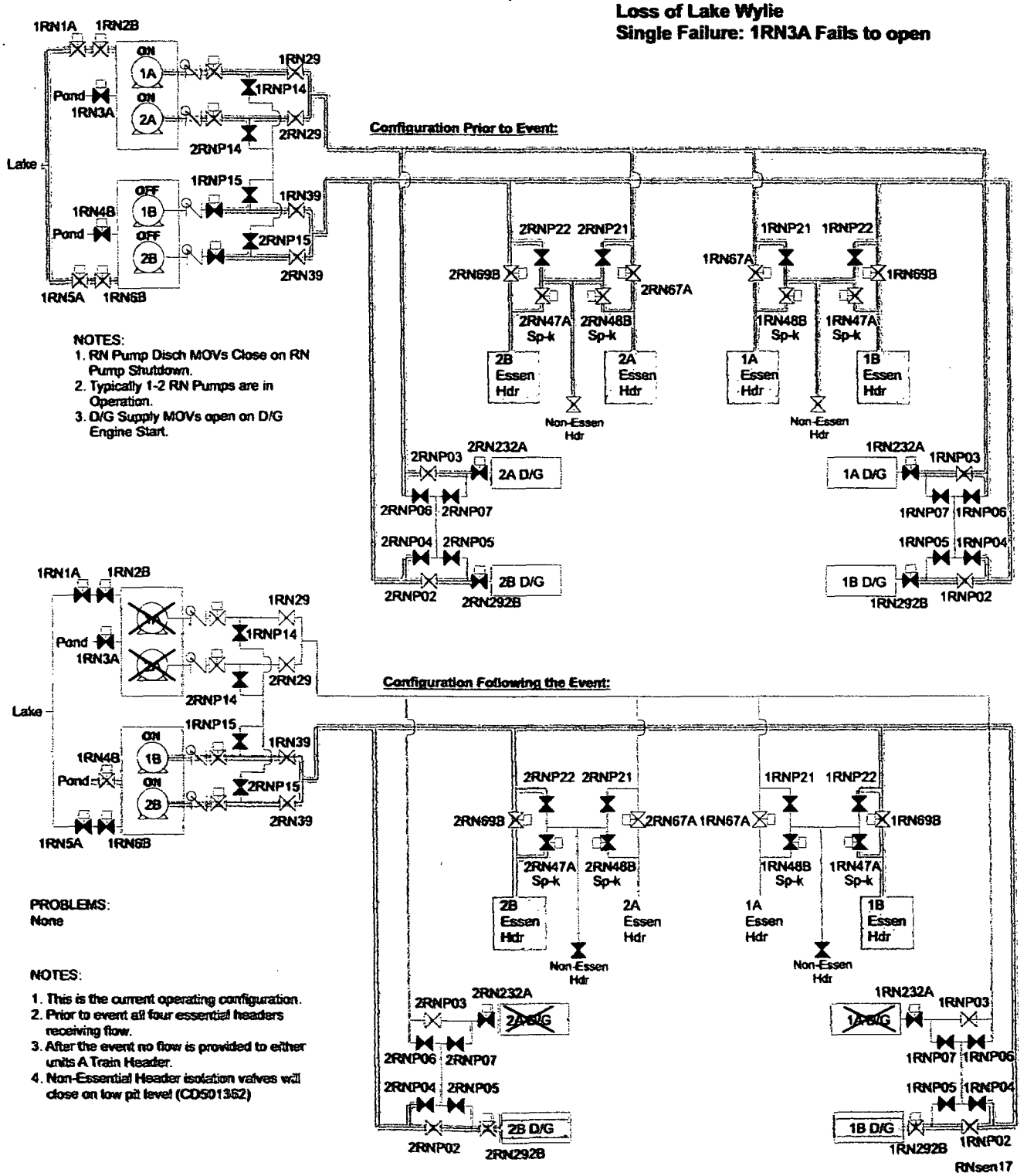

NOTES:
1. RN Pump Disch MOVs Close on RN Pump Shutdown.
2. Typically 1-2 RN Pumps are in Operation.
3. D/G Supply MOVs open on D/G Engine Start.

Figure 4

Initial Conditions
A Train Single Header Operation
Unit 1 Mode 1, Unit 2 Mode 1 (all equip in service)

Event
LOCA (Sp) Unit 1
LOOP Both Units
Loss of Lake Wylie
Single Failure: 1RN3A Fails to open

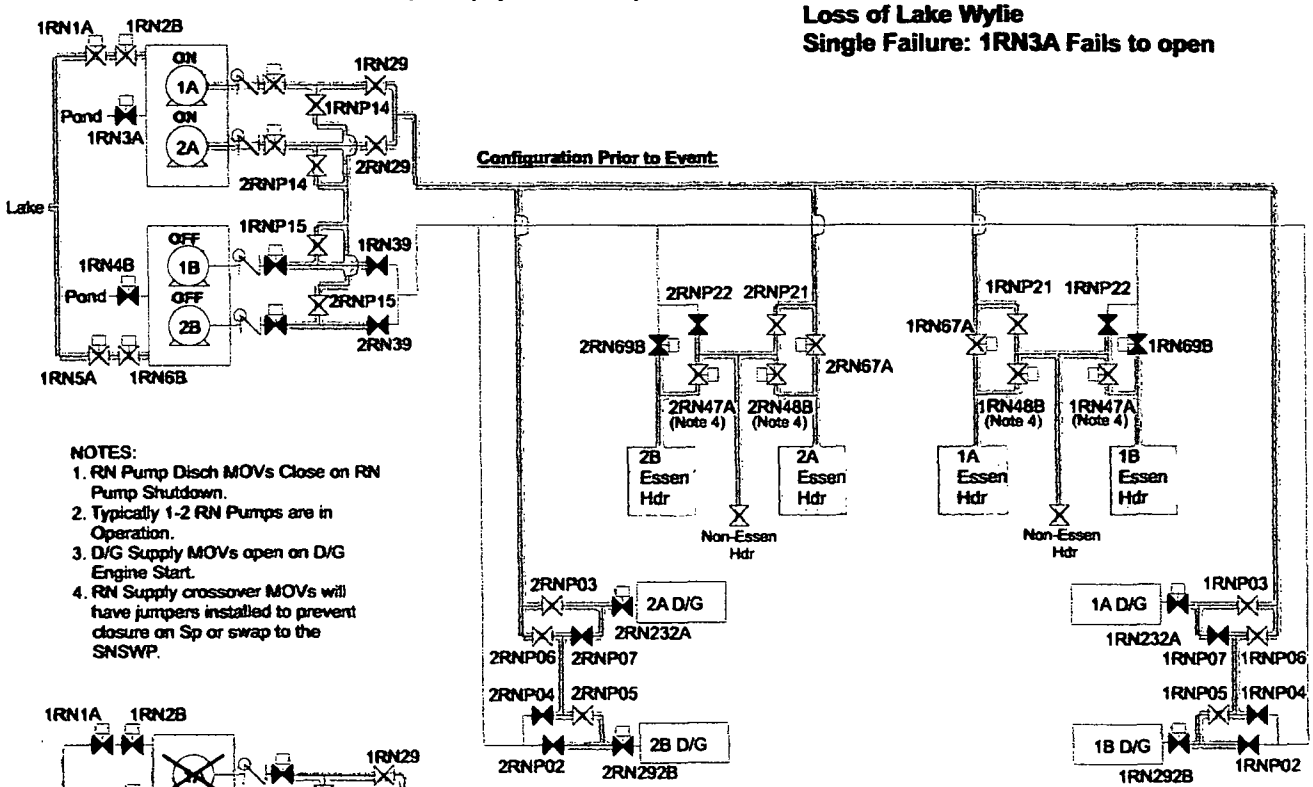

NOTES:
1. RN Pump Disch MOVs Close on RN Pump Shutdown.
2. Typically 1-2 RN Pumps are in Operation.
3. D/G Supply MOVs open on D/G Engine Start.
4. RN Supply crossover MOVs will have jumpers installed to prevent closure on Sp or swap to the SNSWP.

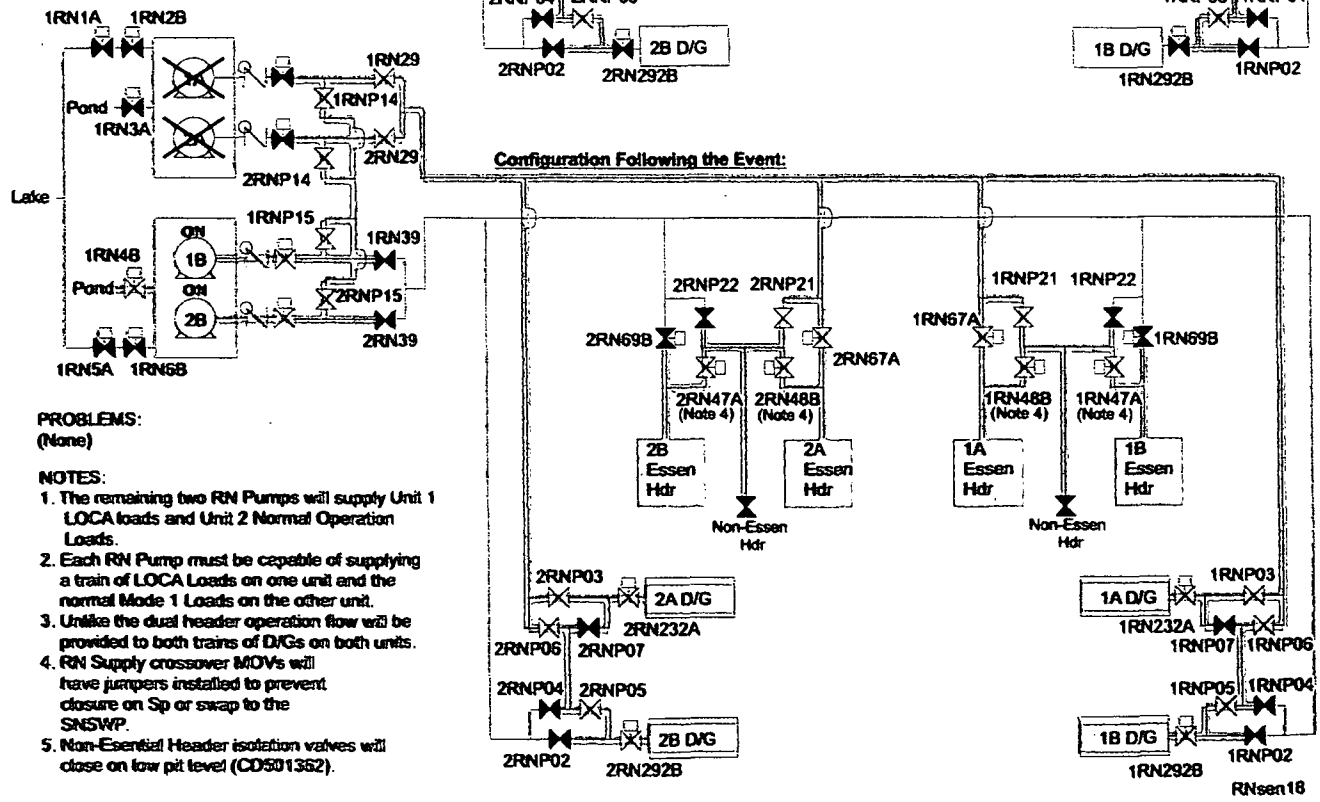

PROBLEMS:
(None)

NOTES:
1. The remaining two RN Pumps will supply Unit 1 LOCA loads and Unit 2 Normal Operation Loads.
2. Each RN Pump must be capable of supplying a train of LOCA Loads on one unit and the normal Mode 1 Loads on the other unit.
3. Unlike the dual header operation flow will be provided to both trains of D/Gs on both units.
4. RN Supply crossover MOVs will have jumpers installed to prevent closure on Sp or swap to the SNSWP.
5. Non-Essential Header isolation valves will close on low pit level (CD501352).

Figure 5

Initial Conditions
Normal (Dual Header) Operation
Unit 1 Mode 1, Unit 2 Mode 5 (All Equip in Service)

Event
LOCA (Sp) Unit 1
LOOP Both Units
Loss of Lake Wylie
Single Failure: 1RN3A Fails to open

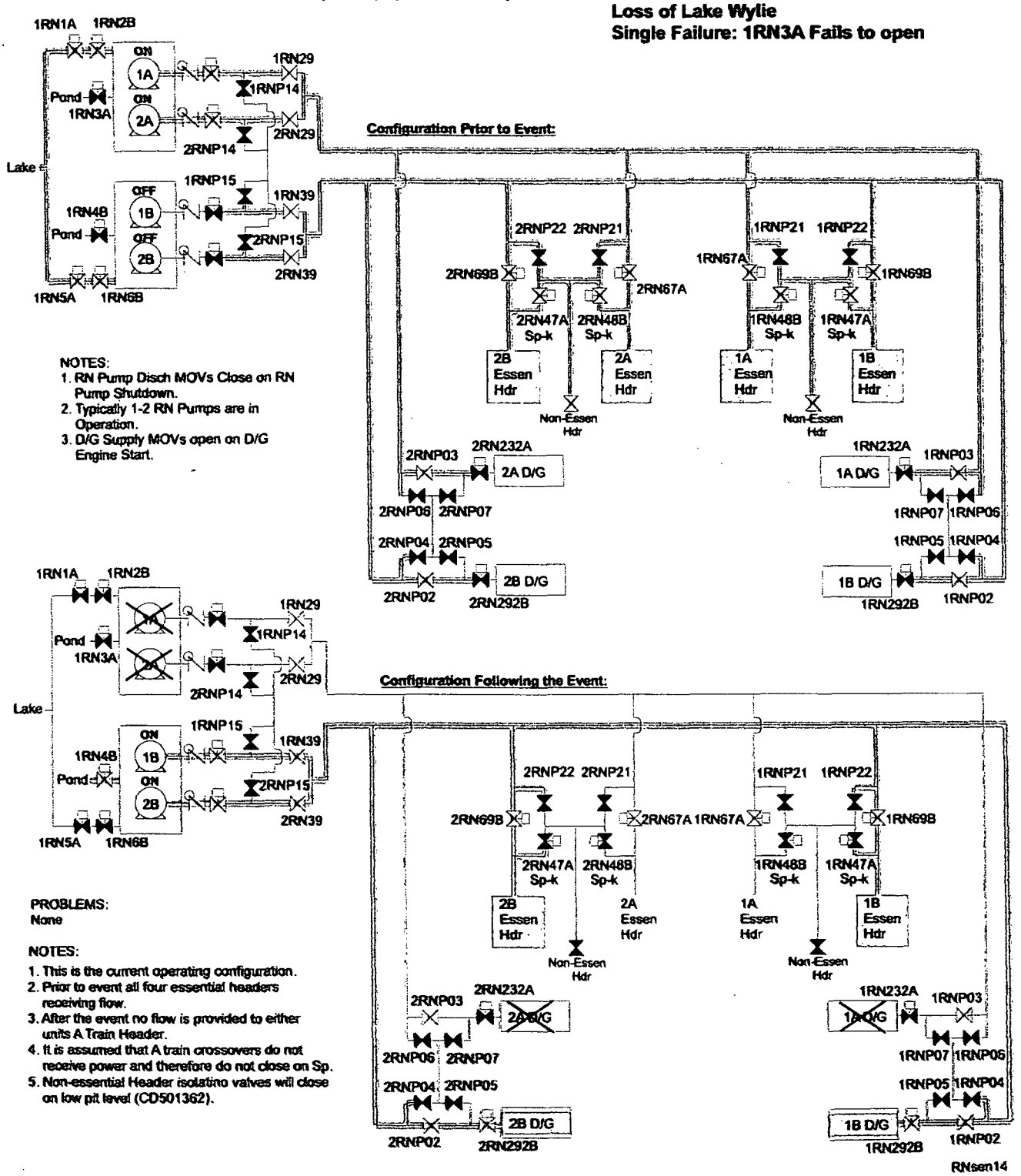

NOTES:
1. RN Pump Disch MOVs Close on RN Pump Shutdown.
2. Typically 1-2 RN Pumps are in Operation.
3. D/G Supply MOVs open on D/G Engine Start.

PROBLEMS:
None

NOTES:
1. This is the current operating configuration.
2. Prior to event all four essential headers receiving flow.
3. After the event no flow is provided to either units A Train Header.
4. It is assumed that A train crossovers do not receive power and therefore do not close on Sp.
5. Non-essential Header isolating valves will close on low pit level (CD501362).

Figure 6

Initial Conditions
A Train Single Header Operation
Unit 1 Mode 1, Unit 2 Mode 5 (all equip in service)

Event
LOCA (Sp) Unit 1
LOOP Both Units
Loss of Lake Wylie
Single Failure: 1RN3A Fails to open

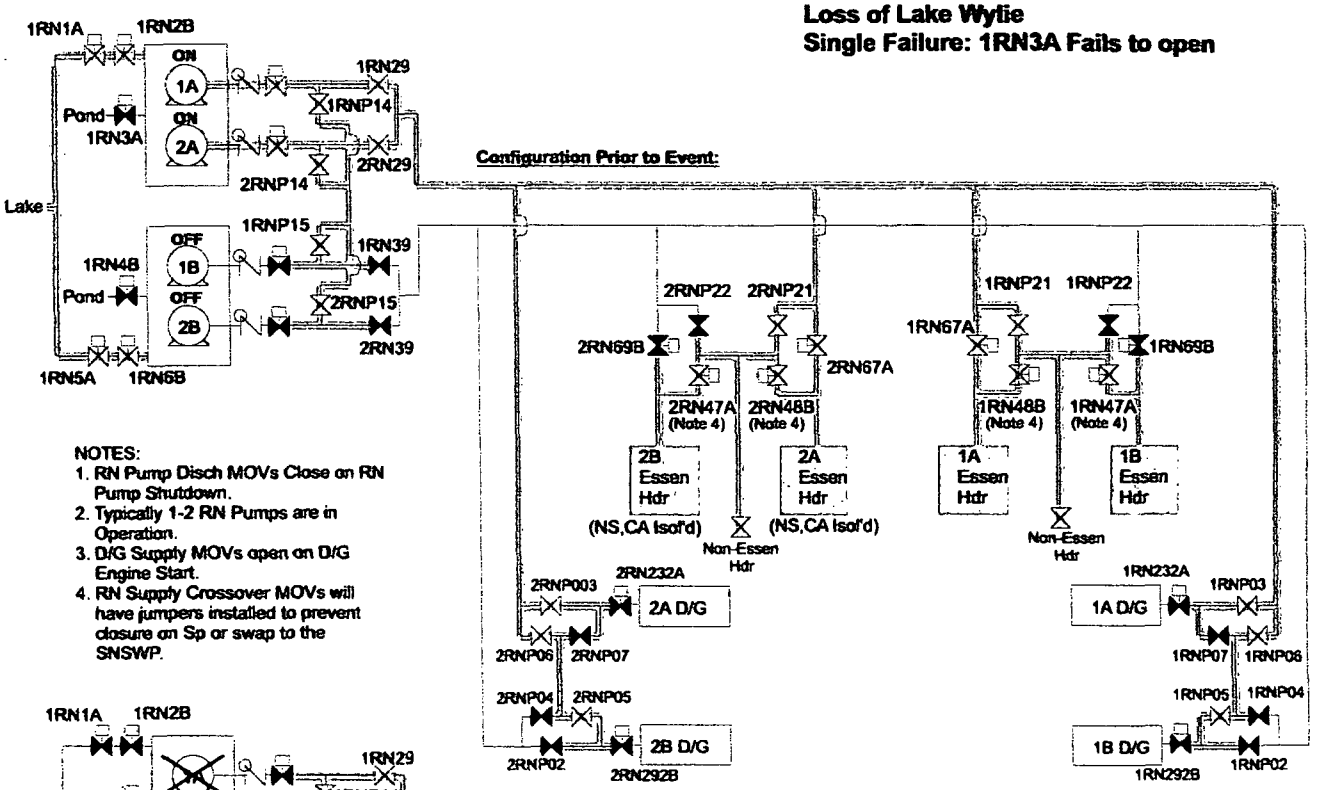

NOTES:
1. RN Pump Disch MOVs Close on RN Pump Shutdown.
2. Typically 1-2 RN Pumps are in Operation.
3. D/G Supply MOVs open on D/G Engine Start.
4. RN Supply Crossover MOVs will have jumpers installed to prevent closure on Sp or swap to the SNSWP.

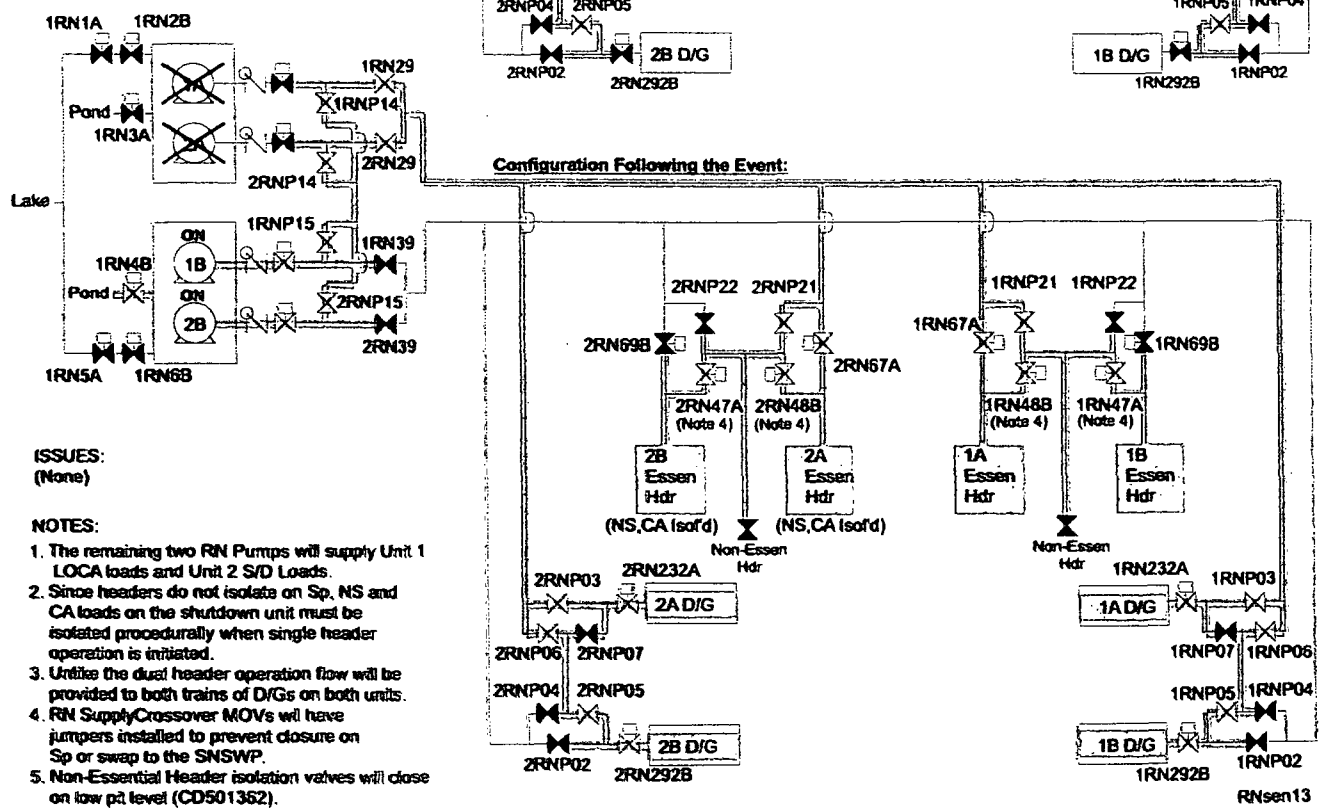

ISSUES:
(None)

NOTES:
1. The remaining two RN Pumps will supply Unit 1 LOCA loads and Unit 2 S/D Loads.
2. Since headers do not isolate on Sp, NS and CA loads on the shutdown unit must be isolated procedurally when single header operation is initiated.
3. Unlike the dual header operation flow will be provided to both trains of D/Gs on both units.
4. RN SupplyCrossover MOVs wil have jumpers installed to prevent closure on Sp or swap to the SNSWP.
5. Non-Essential Header isolation valves will close on low pit level (CD501352).

Figure 7

Initial Conditions
A Train Single Header Operation
Unit 1 Mode 1, Unit 2 Mode 5 (all equip in service)

Event
LOCA (Sp) Unit 1
LOOP Both Units
Loss of Lake Wylie
Single Failure: 1RN4B Fails to open

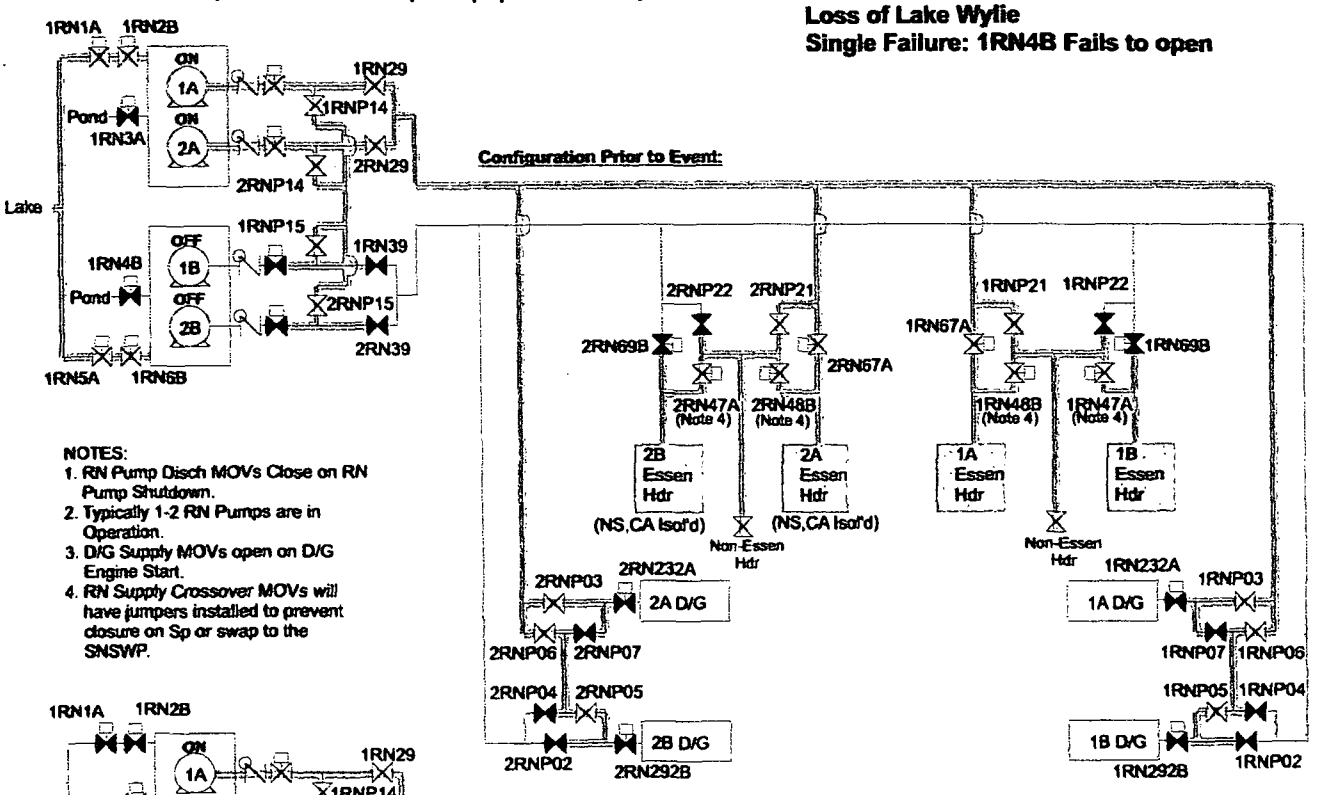

NOTES:
1. RN Pump Disch MOVs Close on RN Pump Shutdown.
2. Typically 1-2 RN Pumps are in Operation.
3. D/G Supply MOVs open on D/G Engine Start.
4. RN Supply Crossover MOVs will have jumpers installed to prevent closure on Sp or swap to the SNSWP.

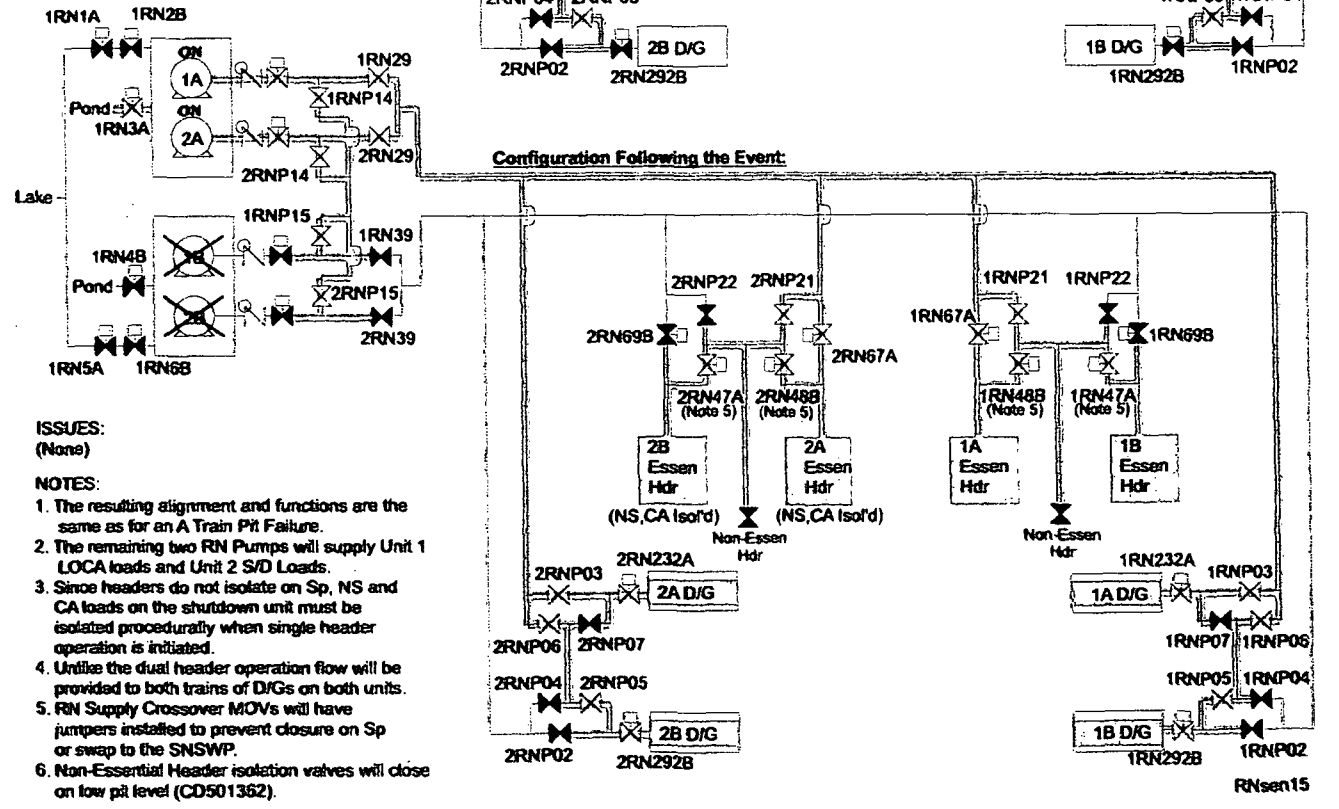

ISSUES:
(None)

NOTES:
1. The resulting alignment and functions are the same as for an A Train Pit Failure.
2. The remaining two RN Pumps will supply Unit 1 LOCA loads and Unit 2 S/D Loads.
3. Since headers do not isolate on Sp, NS and CA loads on the shutdown unit must be isolated procedurally when single header operation is initiated.
4. Unlike the dual header operation flow will be provided to both trains of D/Gs on both units.
5. RN Supply Crossover MOVs will have jumpers installed to prevent closure on Sp or swap to the SNSWP.
6. Non-Essential Header isolation valves will close on low pit level (CD501362).

Figure 8

Initial Conditions
Normal (Dual Header) Operation
Unit 1 Mode 1, Unit 2 Mode 5 (2B RN,D/G OOS)
Single Pump Balance (no action statement)

Event
LOCA (Sp) Unit 1
LOOP Both Units
Loss of Lake Wylie
Single Failure: 1RN3A Fails to open

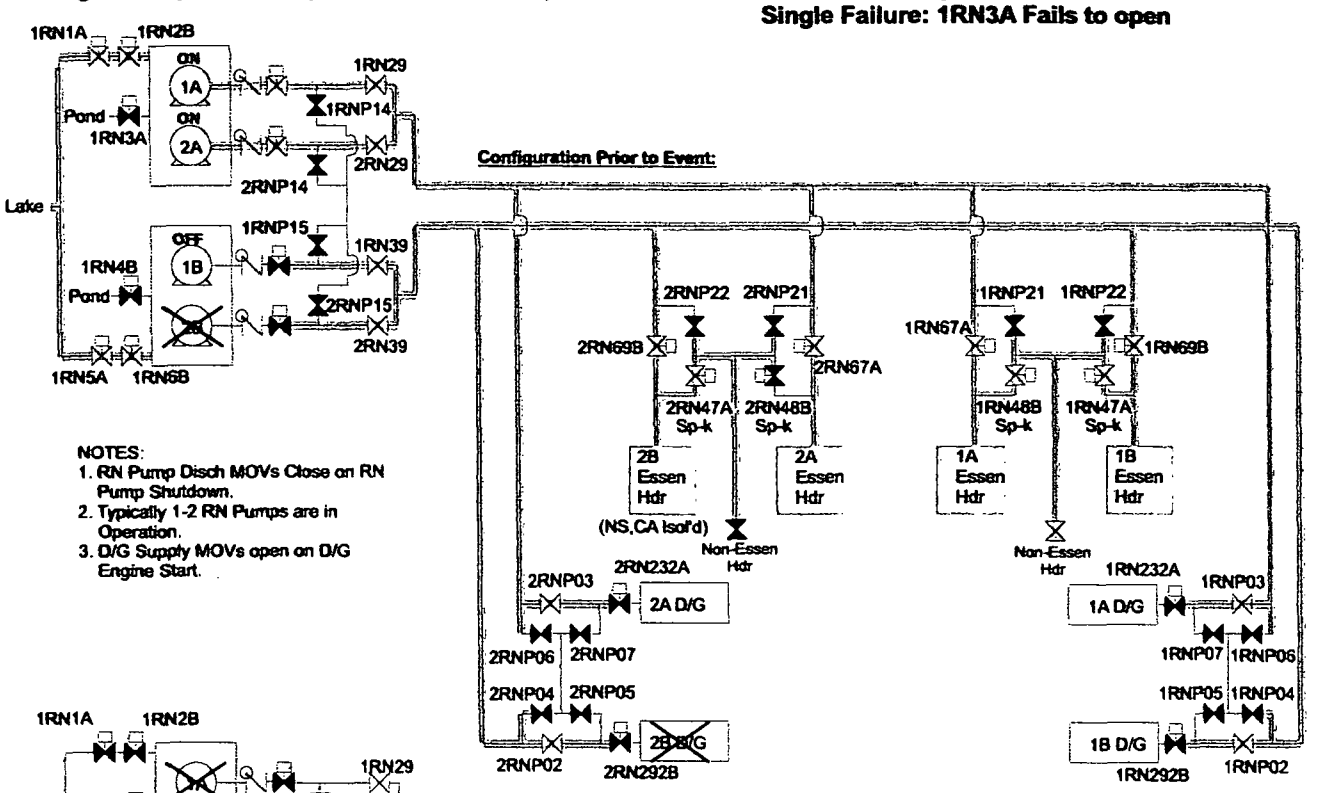

NOTES:
1. RN Pump Disch MOVs Close on RN Pump Shutdown.
2. Typically 1-2 RN Pumps are in Operation.
3. D/G Supply MOVs open on D/G Engine Start.

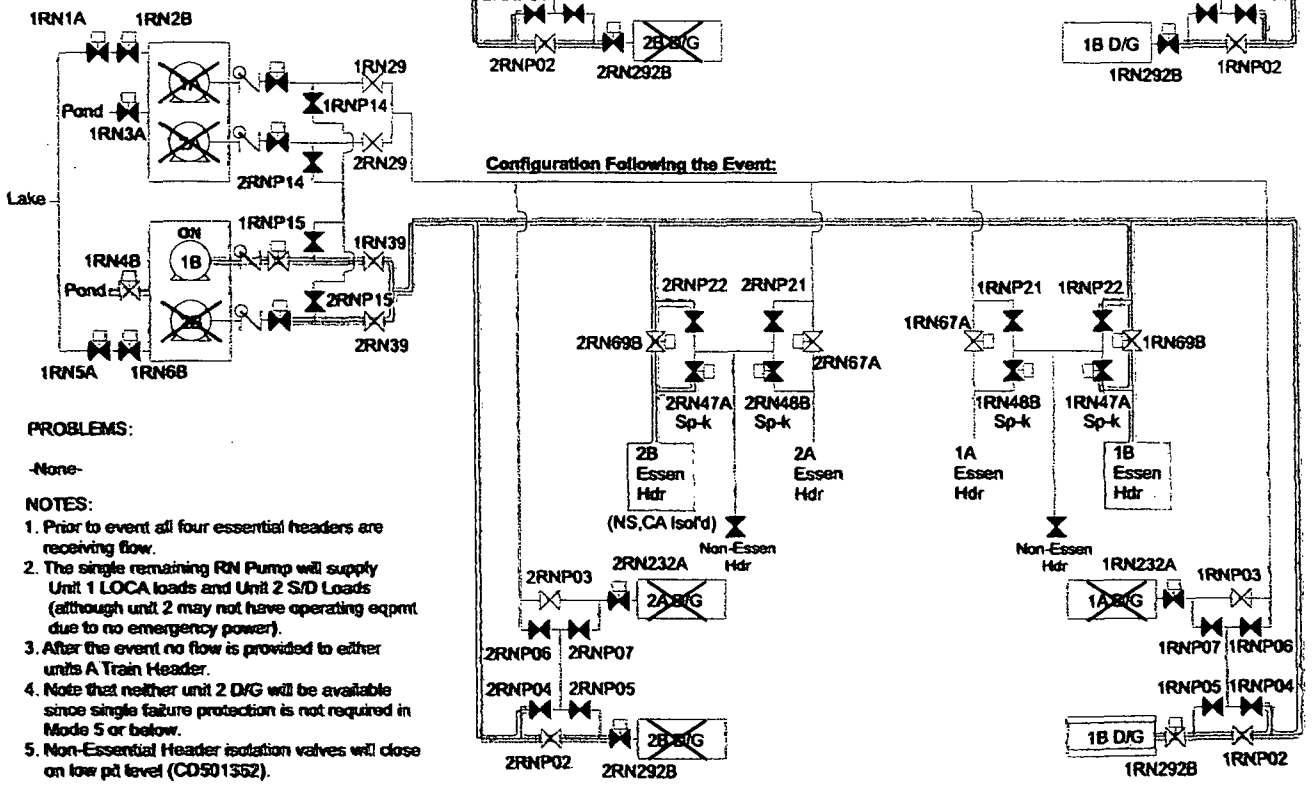

PROBLEMS:

-None-

NOTES:
1. Prior to event all four essential headers are receiving flow.
2. The single remaining RN Pump will supply Unit 1 LOCA loads and Unit 2 S/D Loads (although unit 2 may not have operating eqpmt due to no emergency power).
3. After the event no flow is provided to either units A Train Header.
4. Note that neither unit 2 D/G will be available since single failure protection is not required in Mode 5 or below.
5. Non-Essential Header isolation valves will close on low pd level (CD501352).

RNsen12

Figure 9

Initial Conditions
A Train Single Header Operation
Unit 1 Mode 1, Unit 2 Mode 5 (2B D/G, RN OOS)
Single Pump Balance

Event
LOCA (Sp) Unit 1
LOOP Both Units
Loss of Lake Wylie
Single Failure: 1RN3A Fails to open

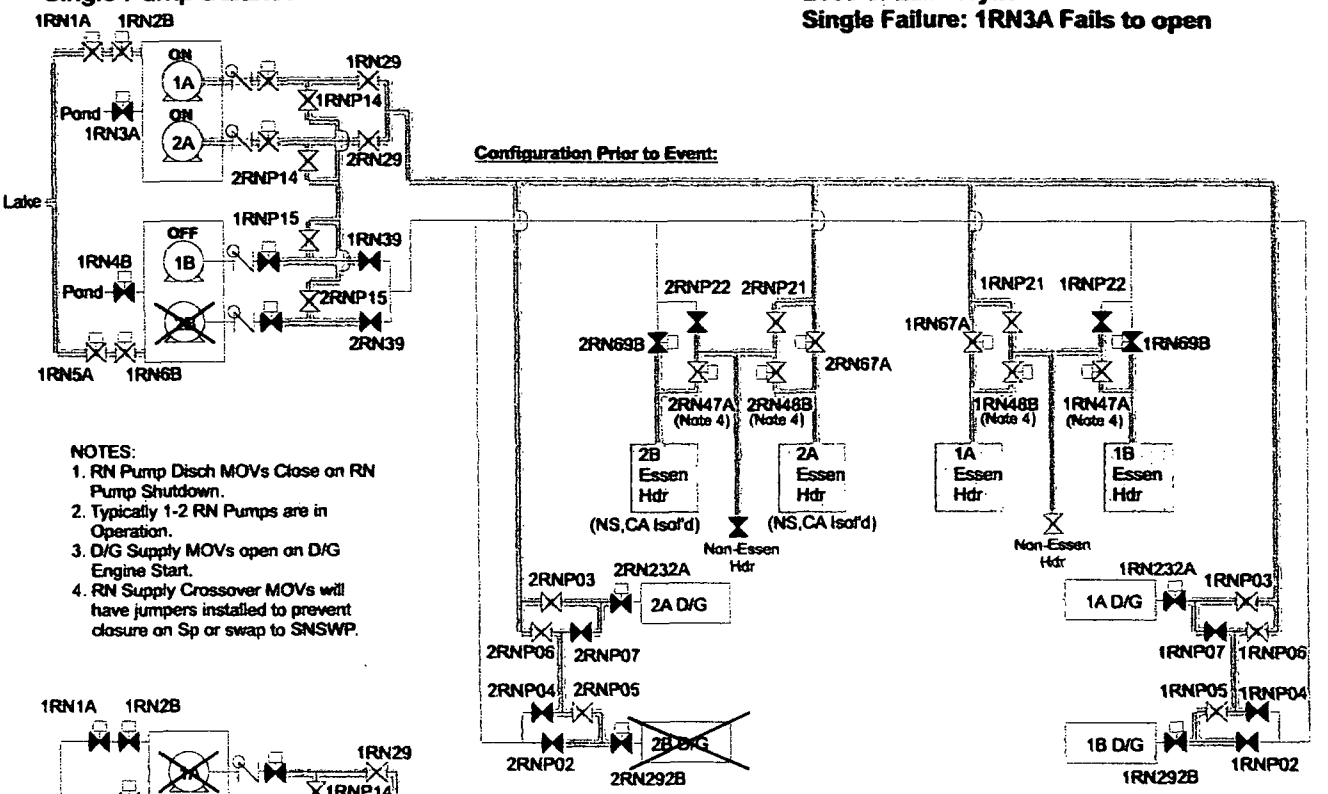

NOTES:
1. RN Pump Disch MOVs Close on RN Pump Shutdown.
2. Typically 1-2 RN Pumps are in Operation.
3. D/G Supply MOVs open on D/G Engine Start.
4. RN Supply Crossover MOVs will have jumpers installed to prevent closure on Sp or swap to SNSWP.

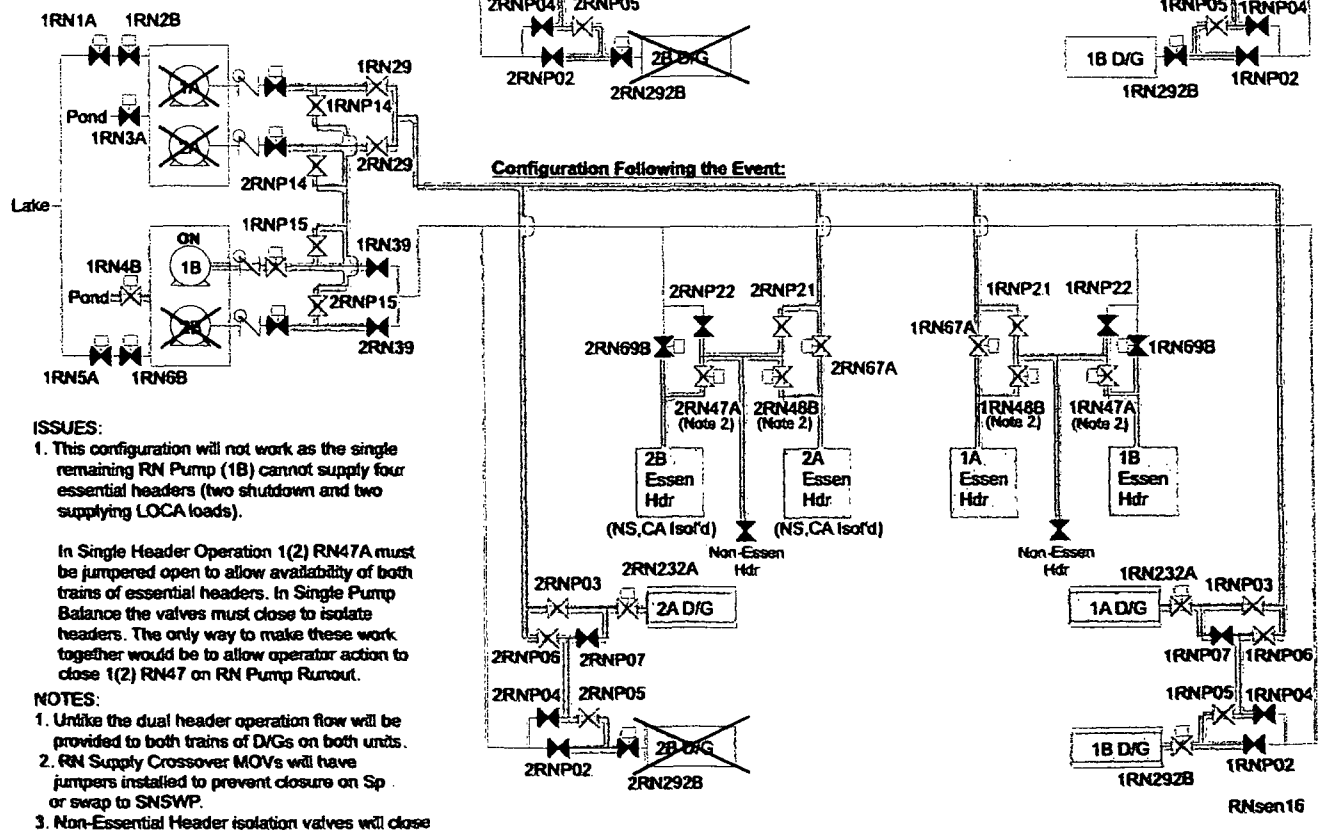

ISSUES:
1. This configuration will not work as the single remaining RN Pump (1B) cannot supply four essential headers (two shutdown and two supplying LOCA loads).

   In Single Header Operation 1(2) RN47A must be jumpered open to allow availability of both trains of essential headers. In Single Pump Balance the valves must close to isolate headers. The only way to make these work together would be to allow operator action to close 1(2) RN47 on RN Pump Runout.

NOTES:
1. Unlike the dual header operation flow will be provided to both trains of D/Gs on both units.
2. RN Supply Crossover MOVs will have jumpers installed to prevent closure on Sp or swap to SNSWP.
3. Non-Essential Header isolation valves will close on low pit level (CD501362).

Probabilistic Risk Analysis (PRA) Considerations

Duke has used a risk-informed approach to determine the risk significance of changing the Completion Time for one inoperable NSWS train due to being in the single supply header alignment beyond its current limit of 72 hours. The acceptance guidelines given in Regulatory Guide 1.174, "An Approach For Using Probabilistic Risk Assessment In Risk-Informed Decisions On Plant-Specific Changes To The Licensing Basis," and Regulatory Guide 1.177, "An Approach For Plant-Specific, Risk-Informed Decisionmaking: Technical Specifications," were used to determine the significance of this change.

The current PRA model was used to perform the risk evaluation considering future modifications that will allow Catawba to operate all four NSWS pumps via a single train when an NSWS supply header is removed from service. The PRA analysis indicated that the risk acceptance criteria found in Regulatory Guides 1.174 and 1.177 were met with a Completion Time of 35 days.

The impact to the seismic Core Damage Frequency (CDF) was considered. Significantly rugged components and structures were screened out of the seismic analysis due to their low probability of failure. Among these components and structures were the NSWS pumps and all qualified piping and valves. Therefore, the NSWS components and piping are considered to be seismically rugged; hence, there were no new failure modes introduced and consideration of the seismic impact was not a factor for this assessment.

PRA Quality

In accordance with Regulatory Guide 1.177, the subsequent paragraphs provide a discussion on PRA quality and Tier 2 and Tier 3 requirements.

PRA Updates

Duke periodically evaluates changes to the plant with respect to the assumptions and modeling in the Catawba PRA. The original Catawba PRA was initiated in July of 1984 by Duke Power Company, assisted by several outside contractors who performed specialized subtasks. It was a full scope Level 3 PRA with internal and external events. A peer review sponsored by the Electric Power Research Institute (EPRI) was conducted after completion of the draft report. The study was published in an internal Duke report in 1987 as Revision 0 to the PRA.

On November 23, 1988, the NRC issued Generic Letter 88-20, which requested that licensees conduct an Individual Plant Examination (IPE) in order to identify potential severe accident vulnerabilities at their plants. The Catawba response to Generic Letter 88-20 was provided by letter dated September 10, 1992. Catawba's response included an updated Catawba PRA (Revision 1) study.

The Catawba PRA Revision 1 study and the IPE process resulted in a comprehensive, systematic examination of Catawba with regard to potential severe accidents. The Catawba study was again a full scope, Level 3 PRA with analysis of both the internal and external events. This examination identified the most likely severe accident sequences, both internally and externally induced, with quantitative perspectives on likelihood and fission product release potential. The results of the study prompted changes in equipment, plant configuration, and enhancements to plant procedures to reduce vulnerability of the plant to some accident sequences of concern.

By letter dated June 7, 1994, the NRC provided a Safety Evaluation of the internal events portion of the above Catawba IPE submittal. The conclusion of the NRC letter (page 16) states:

"The staff finds the licensee's IPE submittal for internal events including internal flooding essentially complete, with the level of detail consistent with the information requested in NUREG-1335. Based on the review of the submittal and the associated supporting information, the staff finds reasonable the licensee's IPE conclusion that no fundamental weakness or severe accident vulnerabilities exist at Catawba."

In response to Generic Letter 88-20, Supplement 4, Duke completed an Individual Plant Examination of External Events (IPEEE) for severe accidents. This IPEEE was submitted to the NRC by letter dated June 21, 1994. The report contained a summary of the methods, results, and conclusions of the Catawba IPEEE program. The IPEEE process and supporting Catawba PRA included a comprehensive, systematic examination of severe accident potential resulting from external initiating events. By letter dated April 12, 1999, the NRC provided an evaluation of the IPEEE submittal. The conclusion of the NRC letter (page 6) states:

"The staff finds the licensee's IPEEE submittal is complete with regard to the information requested by Supplement 4 to

GL 88-20 (and associated guidance in NUREG-1407), and the IPEEE results are reasonable given the Catawba design, operation, and history. Therefore, the staff concludes that the licensee's IPEEE process is capable of identifying the most likely severe accidents and severe accident vulnerabilities, and therefore, that the Catawba IPEEE has met the intent of Supplement 4 to GL 88-20."

In 1996, Catawba initiated Revision 2 of the PRA and provided the results to the NRC in 1998. In April of 2001, Duke notified the NRC that a voluntary initiative at Catawba Nuclear Station to provide backup cooling to the 1A and 2A high head safety injection Centrifugal Charging Pumps (CCPs) had been completed. In conjunction with the completion of the plant modifications, the Catawba PRA Level 1 analysis was also updated and was designated as Revision 2b. The impact of this modification was to lower the base case CDF.

Revision 3 of the Catawba PRA was completed in December of 2004. This update was a comprehensive revision to the PRA models and associated documentation. The objectives of this update were as follows:

- To ensure the models comprising the PRA accurately reflect the current plant, including its physical configurations, operating procedures, maintenance practices, etc.
- To review recent operating experience with respect to updating the frequency of plant transients, failure rates, and maintenance unavailability data.
- To correct items identified as errors and implement PRA enhancements as needed.
- To address areas for improvement identified in the recent Catawba PRA Peer Review.
- To utilize updated Common Cause Analysis data and Human Reliability Analysis data.

Revision 3a of the Catawba PRA was completed in November of 2005. This update was a comprehensive revision to the PRA models and associated documentation. The objective of this update was to incorporate several enhancements to ensure the PRA model accurately reflected the current plant, including its physical configurations, operating procedures, maintenance practices, etc.

PRA maintenance encompasses the identification and evaluation of new information into the PRA and typically involves minor modifications to the plant model. PRA

maintenance and updates, as well as guidance for developing PRA data and evaluation of plant modifications, are governed by workplace procedures.

Approved workplace procedures address the quality assurance of the PRA. One way the quality assurance of the PRA is ensured is by maintaining a set of system notebooks on each of the PRA systems. Each system PRA analyst is responsible for updating a specific system model. This update consists of a comprehensive review of the system, including drawings and plant modifications made since the last update, as well as implementation of any PRA change notices that may exist on the system. The analyst's primary focal point is with the system engineer at the site. The system engineer provides information for the update as needed. The analyst reviews the PRA model with the system engineer and as necessary, conducts a system walkdown with the system engineer.

The system notebooks contain, but are not limited to, documentation on system design, testing and maintenance practices, success criteria, assumptions, descriptions of the reliability data, as well as the results of the quantification. The system notebooks are reviewed and signed off by a second independent person and are approved by the manager of the group.

When any change to the PRA is identified, the same three-signature process of identification, review, and approval is utilized to ensure that the change is valid and that it receives the proper priority.

In January of 2001, an enhanced manual configuration control process was implemented to more effectively track, evaluate, and implement PRA changes to better ensure the PRA reflects the as-built, as-operated plant. This process was further enhanced in July of 2002 with the implementation of an electronic PRA change tracking tool.

Peer Review Process

During March 18-22, 2002, Catawba participated in the Westinghouse Owners Group (WOG)[1] PRA Certification Program. This review followed a process that was originally developed and used by the Boiling Water Reactor Owners Group (BWROG) and subsequently broadened to be an industry applicable process through the Nuclear Energy Institute (NEI) Risk

[1] Now known as the Pressurized Water Reactor Owners Group (PWROG)

Applications Task Force. The resulting industry document, NEI-00-02, "PRA Peer Review Process Guidance," describes the overall PRA peer review process. The Certification/Peer Review process is also linked to the ASME PRA Standard.

(Note: NEI has developed guidance for self assessments to address the use of industry peer review results in demonstrating conformance with the ASME PRA standard. This additional guidance was incorporated into a revision of NEI-00-02. Regulatory Guide 1.200, "An Approach For Determining The Technical Adequacy Of Probabilistic Risk Assessment Results For Risk-Informed Activities," provides the staff position on the ASME standard. Catawba plans to conduct a self assessment against the ASME standard in the future.

The objective of the PRA Peer Review process is to provide a method for establishing the technical quality and adequacy of a PRA for a range of potential risk informed plant applications for which the PRA may be used. The PRA Peer Review process employs a team of PRA and system analysts, who possess significant expertise in PRA development and PRA applications. The team uses checklists to evaluate the scope, comprehensiveness, completeness, and fidelity of the PRA being reviewed. One of the key parts of the review is an assessment of the maintenance and update process to ensure the PRA reflects the as-built plant.

The review team for the Catawba PRA Peer Review consisted of six members. Three of the members were PRA personnel from other utilities. The remaining three were industry consultants. Reviewer independence was maintained by assuring that none of the six individuals had any involvement in the development of the Catawba PRA or IPE.

A summary of some of the Catawba PRA strengths and recommended areas for improvement from the peer review are as follows:

Strengths

- Aggressive response to past PRA peer reviews
- Knowledgeable personnel
- Culture of continuous improvement
- Documentation of final results and analyses
- Good capture of plant experience into the model
- Rigorous Level 2 and 3 PRA

Recommended Areas for Improvement

- Limited comparison to other plant/utility PRAs for results and techniques
- Better documentation of bases for success criteria and Human Reliability Analysis timing
- More focus on realism vs. conservatism in models
- More attention to eliminating old documentation and modeling assumptions/simplifications
- Consider more efficient methods to streamline recovery/post-processing process

The significance levels of the WOG Peer Review Certification process have the following definitions:

"A" Extremely important and necessary to address to ensure the technical adequacy of the PRA, the quality of the PRA, or the quality of the PRA update process.

"B" Important and necessary to address but may be deferred until the next PRA update.

Based on the PRA peer review report, the Catawba PRA received no Fact and Observations (F & O) with the significance level of "A" and 32 F & O with the significance level of "B". The "B" findings have been reviewed and prioritized for incorporation into the PRA. Thirteen of the "B" F & O have already been incorporated into Revision 3 of the PRA. It is expected that the remaining F & O will be resolved and incorporated into Revision 4 of the Catawba PRA.

The remaining open "B" F & O were reviewed with respect to any impact on the proposed TS changes. It was determined that the majority of these issues would have no impact on the proposed TS changes. However, a discussion of peer review items related to this TS change and their resolution is provided below:

ITEM	DISCUSSION
The estimation of the frequency of the loss of service water is incorrect in the application of common cause factors. A "mission time" of 72 hours is used to describe the failure of all four pumps in the calculation of a yearly frequency.	The results of this calculation are sensitive to the methodology used. Duke's current practice of using the 72 hour mission time increases the importance of the pipe failure and results in the most conservative quantification.
The initiating events for certain support system failures (NSWS, Component Cooling Water (CCW) System) are not input in the top event logic as a boolean equation, but rather as a point estimate whose value is derived by solution of the initiating event fault tree.	The use of fault trees to generate point estimates for certain initiating events is a common industry practice and is also consistent with the ASME PRA Standard.

PRA Model

The Catawba PRA is a full scope PRA including both internal and external events. The model includes the necessary initiating events (e.g., Loss of Coolant Accidents (LOCAs), transients) to evaluate the frequency of accidents. The previous reviews of the Catawba PRA, NRC, and peer reviews have not identified deficiencies related to the scope of initiating events considered.

The Catawba PRA includes models for those systems needed to estimate core damage frequency. These include all of the major support systems (e.g., AC power, service water, component cooling water, and instrument air), as well as the mitigating systems (e.g., emergency core cooling). These systems are generally modeled down to the component level, pumps, valves, and heat exchangers. This level of detail is sufficient for this application.

Results of Reviews with Respect to this LAR

A review of the analyses (cut sets and pertinent accident sequences) was made for accuracy and completeness. Specifically, cut sets generated for the solutions were screened and invalid cut sets were removed and appropriate recovery events applied. This process was documented in Duke calculations. The review verified that the calculations adequately modeled the effects of the NSWS' unavailability. Consistent with the workplace procedures governing PRA analysis, this calculation has undergone independent checking by a qualified reviewer.

Tier 2 Assessment: Avoidance of Risk Significant Plant Equipment Outage Configurations

Tier 2 provides reasonable assurance that risk significant plant equipment outage configurations will not occur when specific plant equipment is out of service consistent with the proposed TS changes. Duke is not proposing any additional compensatory actions as a result of the proposed TS changes.

Duke has several Work Process Manual procedures and Nuclear System Directives that are in place at Catawba Nuclear Station to ensure that risk significant plant configurations are avoided. The key documents are as follows:

- Nuclear System Directive 415, "Operational Risk Management (Modes 1-3) per 10 CFR 50.65(a.4)," Revision 3, 12/28/05
- Nuclear System Directive 403, "Shutdown Risk Management (Modes 4, 5, 6, and No-Mode) per 10 CFR 50.65(a.4)," Revision 16, 11/1/06
- Work Process Manual, WPM-609, "Innage Risk Assessment Utilizing ORAM-SENTINEL," Revision 8, June 2004
- Work Process Manual, WPM-608, "Outage Risk Assessment Utilizing ORAM-SENTINEL," Revision 7, June 2004

Additionally, should greater than 50% of the Required Action Completion Time be expected to be exceeded, a Critical Maintenance Plan would be developed that discusses in part the risks associated with the extended maintenance duration.

The proposed changes are not expected to result in any significant changes to the current configuration risk management program. The existing program uses a blended approach of quantitative and qualitative evaluation of each

configuration assessed. The Catawba online computerized risk tool considers both internal and external initiating events with the exception of seismic events. Thus, the overall change in plant risk during maintenance activities is expected to be addressed adequately in accordance with Regulatory Guide 1.177 considering the proposed TS.

Tier 3 Assessment: Maintenance Rule Configuration Control

10 CFR 50.65(a)(4), Regulatory Guide 1.182, "Assessing And Managing Risk Before Maintenance Activities At Nuclear Power Plants," and NUMARC 93-01, "Industry Guideline for Monitoring the Effectiveness of Maintenance at Nuclear Power Plants," require that prior to performing maintenance activities, risk assessments shall be performed to assess and manage the increase in risk that may result from proposed maintenance activities. These requirements are applicable for all plant modes. NUMARC 91-06, "Guidelines for Industry Actions to Assess Shutdown Management," requires utilities to assess and manage the risks that occur during the performance of outages.

As stated above, Duke has approved procedures and directives in place at Catawba to ensure the requirements of the Maintenance Rule are implemented. These documents are used to address the Maintenance Rule requirements, including the online (and offline) Maintenance Policy requirement to control the safety impact of combinations of equipment removed from service.

More specifically, the Nuclear System Directives address the process, define the program, and state individual group responsibilities to ensure compliance with the Maintenance Rule. The Work Process Manual procedures provide a consistent process for utilizing the computerized software assessment tool which manages the risk associated with equipment inoperability.

The electronic risk assessment tool, called ORAM-SENTINEL, is a Windows based computer program designed by the Electric Power Research Institute as a tool for plant personnel to use to analyze and manage the risk associated with all risk significant work activities, including assessment of combinations of equipment removed from service. It is independent of the requirements of TS and station Selected Licensee Commitments.

The ORAM-SENTINEL models for Catawba are based on a "blended" approach of probabilistic and traditional deterministic approaches. The results of the risk assessment include a prioritized listing of equipment to

return to service, a prioritized listing of equipment to remain in service, and potential contingency considerations.

Additionally, prior to the release of work for execution, Operations personnel must consider the effects of severe weather and grid instabilities on plant operations. This qualitative evaluation is inherent of the duties of the Work Control Center Senior Reactor Operator. Responses to actual plant risk due to severe weather or grid instabilities are programmatically incorporated into applicable plant emergency or response procedures.

The NSWS is currently included in the Maintenance Rule program, and as such, availability and reliability performance criteria have been established to assure that it performs adequately.

Impact of PRA Analysis on Fire and Flooding Events

For the proposed LAR configuration, the only major impact on CDF is attributed to loss of NSWS events. There is a negligible effect on the ability to mitigate other events, including fires and floods.

ATTACHMENT 4

NO SIGNIFICANT HAZARDS CONSIDERATION DETERMINATION

No Significant Hazards Consideration Determination

The following discussion is a summary of the evaluation of the changes contained in this proposed amendment against the 10 CFR 50.92(c) requirements to demonstrate that all three standards are satisfied. A no significant hazards consideration is indicated if operation of the facility in accordance with the proposed amendment would not:

1. Involve a significant increase in the probability or consequences of an accident previously evaluated, or

2. Create the possibility of a new or different kind of accident from any accident previously evaluated, or

3. Involve a significant reduction in a margin of safety.

First Standard

Does operation of the facility in accordance with the proposed amendment involve a significant increase in the probability or consequences of an accident previously evaluated?

Response: No.

The proposed single supply header operation configuration for NSWS operation and the associated proposed TS and Bases changes have been evaluated to assess their impact on plant operation and to ensure that the design basis safety functions of safety related systems are not adversely impacted. During single supply header operation, the operating NSWS header will be able to supply all required NSWS flow to safety related components. It was demonstrated that proposed single failures would not cause the NSWS to be rendered incapable of performing its required safety related function under accident conditions.

The purpose of this amendment request is to ultimately facilitate inspection and maintenance of the NSWS supply headers. Therefore, NRC approval of this request will ultimately help to enhance the long-term structural integrity of the NSWS and will help to ensure the system's reliability for many years.

In general, the NSWS serves as an accident mitigation system and cannot by itself initiate an accident or transient situation. The only exception is that the NSWS piping can serve as a source of floodwater to safety related equipment

in the auxiliary building or in the diesel generator buildings in the event of a leak or a break in the system piping. The probability of such an event is not significantly increased as a result of this proposed request. NSWS piping added in support of the proposed request will be tested and maintained in a manner consistent with that for comparable safety related piping in the NSWS.

The proposed 35 day TS Required Action Completion Time has been evaluated for risk significance and the results of this evaluation have been found acceptable. The probabilities of occurrence of accidents presented in the UFSAR will not increase as a result of implementation of this change. Because the PRA analysis supporting the proposed change yielded acceptable results, the NSWS will maintain its required availability in response to accident situations. Since NSWS availability is maintained, the response of the plant to accident situations will remain acceptable and the consequences of accidents presented in the UFSAR will not increase.

Second Standard

Does operation of the facility in accordance with the proposed amendment create the possibility of a new or different kind of accident from any accident previously evaluated?

Response: No.

Implementation of this amendment will not create the possibility of a new or different kind of accident from any accident previously evaluated. The proposed request does not affect the basic operation of the NSWS or any of the systems that it supports. These include the Emergency Core Cooling System, the Containment Spray System, the Containment Valve Injection Water System, the Auxiliary Feedwater System, the Component Cooling Water System, the Control Room Area Ventilation System, the Control Room Area Chilled Water System, the Auxiliary Building Filtered Ventilation Exhaust System, or the Diesel Generators. During proposed single supply header operation, the NSWS will remain capable of fulfilling all of its design basis requirements, even when assuming the required single failure.

No new accident causal mechanisms are created as a result of NRC approval of this amendment request. No changes are being made to the plant which will introduce any new type of accident outside those assumed in the UFSAR.

Third Standard

Does operation of the facility in accordance with the proposed amendment involve a significant reduction in the margin of safety?

Response: No.

Implementation of this amendment will not involve a significant reduction in any margin of safety. Margin of safety is related to the confidence in the ability of the fission product barriers to perform their design functions during and following an accident situation. These barriers include the fuel cladding, the reactor coolant system, and the containment system. The performance of these fission product barriers will not be impacted by implementation of this proposed TS amendment. During single supply header operation, the NSWS and its supported systems will remain capable of performing their required functions even assuming the postulated single failure. No safety margins will be impacted.

The PRA conducted for this proposed amendment demonstrated that the impact on overall plant risk remains acceptable during single supply header operation. Therefore, there is not a significant reduction in the margin of safety.

Based upon the preceding discussion, Duke has concluded that the proposed amendment does not involve a significant hazards consideration.

ATTACHMENT 5

ENVIRONMENTAL ANALYSIS

Environmental Analysis

Pursuant to 10 CFR 51.22(b), an evaluation of this license amendment request has been performed to determine whether or not it meets the criteria for categorical exclusion set forth in 10 CFR 51.22(c)(9) of the regulations.

Implementation of this amendment will have no adverse impact upon the Catawba units; neither will it contribute to any additional quantity or type of effluent being available for adverse environmental impact or personnel exposure.

It has been determined there is:

1. No significant hazards consideration,

2. No significant change in the types, or significant increase in the amounts, of any effluents that may be released offsite, and

3. No significant increase in individual or cumulative occupational radiation exposures involved.

Therefore, this amendment to the Catawba TS meets the criteria of 10 CFR 51.22(c)(9) for categorical exclusion from an environmental impact statement.

ATTACHMENT 6

LIST OF NRC COMMITMENTS

List of NRC Commitments

The following NRC commitments are being made in support of these proposed amendments:

1. The approved amendments will be implemented within 60 days from the date of NRC approval. "Implemented" means that the approved amendments will have been placed into the control room copies of the TS. However, the provisions afforded by the approved amendments may not actually be utilized until such time in the future that Duke determines to be appropriate.

2. Prior to actually utilizing the provisions afforded by the approved amendments, Catawba will have in place all required document and process changes necessary to support these provisions. In addition, all required design changes will have been fully implemented, and the Unit 1 diesel generator sump pump capability will have been made functional.