NAC INTERNATIONAL

Atlanta Corporate Headquarters
3930 East Jones Bridge Road, Suite 200
Norcross, GA 30092
Phone 770-447-1144
Fax 770-447-1797
www.nacintl.com

September 6, 2007

U.S. Nuclear Regulatory Commission
11555 Rockville Pike
Rockville, MD 20852-2738

Attn: Document Control Desk

Subject: Response to Request for Additional Information for an Amendment for Certificate of Compliance No. 1015 for the NAC-UMS® Universal Storage System (TAC No. L24032), Docket No. 72-1015

References:
1. Certificate of Compliance No. 1015 for the NAC International Universal Storage System (NAC-UMS®), U.S. Nuclear Regulatory Commission, Amendment 4, October 11, 2005
2. Final Safety Analysis Report (FSAR) for the UMS® Universal Storage System, Revision 6, NAC International, November 2006
3. Request for an Amendment of Certificate of Compliance (CoC) No. 1015 for the NAC-UMS® Universal Storage System to Incorporate High Burnup PWR Fuel as Approved Contents and Implement Changes to the Technical Specifications, NAC International, September 22, 2006
4. Correction of Administrative Errors in Appendix A of Amendment 4 of Certificate of Compliance (CoC) No. 1015 for the NAC-UMS® Universal Storage System, NAC International, May 8, 2007
5. Request for Additional Information for Review of an Amendment for the Certificate of Compliance No. 1015 for the NAC-UMS® Universal Storage System (Docket 72-1015), U.S. Nuclear Regulatory Commission, May 30, 2007
6. Schedule for Responding to the RAI for the Review of the NAC-UMS® High Burnup Amendment Application, NAC International, June 19, 2007

NAC International (NAC) herewith submits eight copies of the Responses to Reference 5, the U.S. Nuclear Regulatory Commission (NRC) Request for Additional Information (RAI).

This submittal includes the RAI information requests with the NAC responses presented in the standard NAC RAI response format, the associated changed pages for the Final Safety Analysis Report (FSAR) for the UMS® Universal Storage System, which are designated as Revision UMSS-07A, and the proposed changed pages for the Technical Specifications. The enclosed FSAR changed pages (UMSS-07A) are to be inserted as replacement, or new additional pages, as applicable, into the Reference 3 and Reference 4 amendment requests. After replacement/ insertion of the changed pages provided in this submittal, the current List of Effective Pages should be used to verify that the correct page revisions are included in the compiled amendment request package.

ED20070057

NMSS01
NMSS

Consistent with NAC administrative practice, all FSAR pages changed in this submittal are uniquely identified as Revision UMSS-07A, and a revision bar marks each change on a page.

Text flow changes are not marked with revision bars. Upon final approval, the changed pages will be reformatted, assigned the next appropriate revision number, and incorporated into the next revision of the FSAR.

Specific items included in this package are:

- Reinstitution of the performance of the helium leakage test of the canister shield lid welds as currently licensed in Appendix A, Technical Specifications, Limiting Condition for Operation (LCO) A 3.1.5. The proposed wording and procedure changes as incorporated in the September 22, 2006 amendment request to implement ISG-18 and ISG-15 are voided. The currently approved shield lid weld design and the welding, inspection and testing sequence for the shield lid welds, as defined in the NAC-UMS® FSAR and Amendment 4 to the CoC for the NAC-UMS® system, remain unchanged and will continue to be utilized.

  The NAC-UMS® FSAR is revised as well (Revision UMSS-07A) to reflect the reinstitution of the helium leakage test. Affected parts of the FSAR are Appendix A, Appendix B, Appendix 12C, Chapter 1 and Chapters 7 through 9. The affected pages are returned to the previously approved version unless otherwise noted.

- The term "leaktight" is replaced by "no credible leakage" or similar language throughout the FSAR. These changes were made in accordance with NRC RIS 2007-09: Examples of Recurring Requests for Additional Information (RAIs) for 10 CFR Part 71 and 72 Applications, Attachment 1, Item 7.a., dated May 4, 2007.

- Definitions of intact fuel and damaged fuel in Chapter 1 and Appendix A are revised. The revised definitions invoke structural constraints and contain definitions per ISG-1, Revision 2 – i.e., allowed content is revised to "undamaged fuel" rather than "intact fuel."

- Incorporation of an alternative approach to ISG-11, Revision 3, for fuel cladding temperatures. FSAR text has been revised in Section 4.1 to reference ISG-11, Revision 3, and thermal cycle limits imposed for high burnup fuel. Technical Specification LCO 3.1.1 has been revised to control the number of fuel cladding temperature changes greater than 117°F (65°C) to fewer than 10 cycles, and Appendix 12C, C 3.1.1 has been revised to present the basis for the imposed limits controlling hydride reorientation in fuel with burnup greater than 45 GWd/MTU.

- Section 11.2.16 of the FSAR is revised to clarify that PWR assemblies (and rods) with missing or damaged grids are evaluated in this section and demonstrated to remain structurally sound. BWR fuel assembly references are removed from Section 11.2.16.

- The evaluation of the fuel rod buckling for high burnup fuel in Section 11.2.16 has been revised to take into account the fuel pellet being independent of the fuel clad.

Current NAC-UMS® cask licensee loading schedule for high burnup fuel requires a final effective date for Amendment 5 before March 2008, so the NRC is requested to complete the review of the changes requested herein and to issue the draft CoC and Safety Evaluation Report by December 2007. The desired final effective date for this requested amendment is February 15, 2008.

If you have any comments or questions, please contact me on my direct line at (678) 328-1274.

Sincerely,

Anthony L. Patko
Director, Licensing
Engineering

Attachment 1 – List of Proposed Changes for the UMS® Universal Storage System Revision UMSS-07A

Enclosures

cc: Glenn Michael (APS)
Keith Waldrop (Duke)
Jim Connell (MY)

Attachment 1

List of Proposed Changes for the

UMS® Universal Storage System

Revision UMSS-07A

NAC International

August 2007

List of Proposed Changes to the NAC-UMS® Technical Specifications and FSAR

Proposed Technical Specifications Changes – General

1. General – Revised "Amendment 4" to "Amendment 5" on the pages with proposed changes

Proposed Changes in Appendix A, Technical Specifications for the NAC-UMS® System

1. Page A-2 – List of Effective Pages revised to show proposed Amendment 5 pages
2. Page A-3 – Table of Contents was revised to show that LCO A 3.1.5 was reinstated
3. Page A1-1 – added the terms "Assembly Defect" and "Breached Spent Fuel Rod" and their definitions
4. Pages A1-2 and A1-3 – revised the definition of the term "Damaged Fuel"
5. Page A1-4 – added the term "Grossly Beached Spent Fuel Rod" and revised the definition of the term "Intact Fuel (Assembly or Rod)"
6. Page A1-7 – added the term "Undamaged Fuel" and its definition
7. Page A3-5 – added Note at the end of Item 2 to limit cooling/vacuum drying cycles for higher burnup fuel
8. Page A3-12 – reinstated LCO 3.1.5, CANISTER Helium Leak Rate

Proposed Changes in Appendix B, Technical Specifications for the NAC-UMS® System

1. Page B-2 – List of Effective Pages revised to show proposed Amendment 5 pages
2. Page B-3 – Table of Contents was revised to reflect Appendix B page changes
3. Page B2-2 – Section B 2.1.2, Maine Yankee SITE-SPECIFIC FUEL Preferential Loading, 3rd paragraph – deleted last sentence added by UMS Amendment UMSS-06A
4. Page B2-4, Figure B2-1, PWR Basket Fuel Loading and Flux Trap Positions – revised to correlate flux trap size to disk location
5. Page B2-5, Figure B2-2, BWR Basket Fuel Loading and Flux Trap Positions – revised to correlate flux trap size to disk location
6. Page B2-6, Table B2-1, Fuel Assembly Limits, sentence following I.A.1.h. – revised to directly reference the value of the maximum site-specific heat load and the location in the Technical Specifications where it is included
7. Page B2-7, Table B2-1, Fuel Assembly Limits, Item H – changed "INTACT" to "UNDAMAGED"; added new Item I to clarify PWR fuel allowed contents

8. Page B2-8, Table B2-1, Fuel Assembly Limits – added new Item H to clarify BWR fuel allowed contents

9. Page B2-9, Table B2-2, PWR Fuel Assembly Characteristics – deleted footnote 3 (it was redundant) and subsequently renumbered remainder of footnotes

10. Page B3-1, Section B 3.2.1, CANISTER – INTACT FUEL ASSEMBLIES – added item e) to include minimum flux trap (structural disk web) thickness for both PWR and BWR baskets

11. Page B3-5, Table B3-1, List of ASME Code Exceptions for the NAC-UMS System, CANISTER Vessel and Shield Lid row, last column – previously proposed changes (UMSS-06A) voided and returned to Amendment 4 wording

Proposed NAC-UMS® FSAR Changes

1. General – The List of Effective pages and the applicable chapter Table of Contents were revised to reflect the proposed changes. Note: The List of Effective Pages contains pages previously changed by the 10 CFR 72.48 process.

2. General – Numerous pages were changed due to text flow created by proposed changes. There are no changes or modifications to the text or information contained on those pages, so there are no vertical revision bars showing revised areas.

3. Page 1-3, Table 1-1, Terminology – added the terms "Assembly Defect" and "Breached Spent Fuel Rod" and their definitions; "Consolidated Fuel", 1st sentence – changed "intact fuel rods" to "undamaged fuel rods"
   Note: The terms listed in Table 1-1 have been alphabetized, following the definitions for Universal Storage System and Universal Transport Cask, for easier referencing.

4. Pages 1-4 and 1-5, Table 1-1, Terminology – revised the definition of "Damaged Fuel"

5. Page 1-6, Table 1-1, Terminology – added the term "Grossly Breached Spent Fuel Rod" and its definition; revised the definition of "Intact Fuel (Assembly or Rod)"; "Maine Yankee Fuel Can" – changed "intact fuel assembly" to "undamaged fuel assembly"

6. Page 1-9, Table 1-1, Terminology – added the term "Undamaged Fuel" and its definition
   Note: Undamaged Fuel was previously included in the definition for Intact Fuel.

7. Page 1.2-3, 1st partial paragraph, 1st full sentence – revised to delete the use of the term "leaktight" to describe the UMS® confinement system and to replace by "no credible leakage"

8. Page 1.2-10, Section 1.2.1.5.8, Helium Leak Test Equipment, 1st sentence – previously proposed changes (UMSS-06A) voided and returned to Revision 4 wording

9. Page 1.2-13, 5th bullet, 3rd sentence – previously proposed changes (UMSS-06A) voided and returned to 72.48 change wording, except for the deletion of second canister cavity evacuation and helium backfill

10. Page 1.5-28, Table 1.5-1, NUREG-1536 Compliance Matrix, Area – Release of Nuclides to the Environment, last column, 1st sentence – revised to delete the use of the term "leaktight" to describe the UMS® confinement system and to replace by "no credible leakage"

11. Page 1.5-30, Table 1.5-1, NUREG-1536 Compliance Matrix, Area – Maximum Allowable Leakage Rates, last column – deleted "because the canister is demonstrated to be leaktight"

12. Page 1-5-38, Table 1.5-1, NUREG-1536 Compliance Matrix, Area – Confinement System, 2nd column and 3rd column – previously proposed changes (UMSS-06A) voided and returned to Revision 3 wording; also ANSI N14.5 reference changed from 1987 to current 1997 revision

13. Page 1.5-44, Table 1.5-1, NUREG-1536 Compliance Matrix, Area – Monitoring System, 3rd column, 2nd sentence – revised to delete the use of the term "leaktight" to describe the UMS® confinement system and to replace by "no credible leakage"

14. Page 2-1, Section 2.0, Principal Design Criteria, 2nd sentence – deleted "intact"

15. Page 2.1.1-1, Section 2.1.1, PWR Fuel Evaluation, 1st paragraph, 3rd sentence – changed "intact PWR fuel assemblies" to "undamaged PWR fuel assemblies"

16. Page 2.1.1-2, Table 2.1.1-1, PWR Fuel Assembly Characteristics, last row – changed Fuel Condition from "Intact" to "Undamaged" for all fuel assembly sizes

17. Page 2.1.2-1, Section 2.1.2, BWR Fuel Evaluation, 1st paragraph, 2nd sentence – changed "intact BWR fuel assemblies" to "undamaged BWR fuel assemblies"

18. Page 2.1.2-2, Tabel 2.1.2-1, BWR Fuel Assembly Characteristics, last row – changed Fuel Condition from "Intact" to "Undamaged" for all fuel assembly sizes

19. Page 2.1.3-1, Section 2.1.3.1, Maine Yankee Site Specific Spent Fuel, 1st paragraph, 2nd sentence – deleted intact and removed the parenthesis around undamaged

20. Page 2.1.3-2, Section 2.1.3.1.2, Maine Yankee Consolidated Fuel, 1st paragraph, 1st sentence – changed "intact fuel rods" to "undamaged fuel rods"

21. Page 2.1.3-3, Section 2.1.3.1.3, Maine Yankee Spent Fuel with Inserted Integral Hardware or Nonfuel Items, 4th paragraph, 2nd sentence – changed "intact fuel assembly" to "undamaged fuel assembly"

22. Page 2.1.3-4, Section 2.1.3.1.5, Maine Yankee Fuel Can, 1st sentence – changed "intact fuel" to "undamaged fuel"

23. Page 2.1.3-6, 3rd paragraph, 1st sentence – changed "intact fuel" to "undamaged fuel" and added reference [25]

24. Page 3.6-1, Section 3.6.1, Structural Evaluation of Maine Yankee Site Specific Spent Fuel for Normal Operating Conditions, 2nd sentence – changed "intact" to "undamaged" in 2 places; Section 3.6.1.1 – changed title from "Maine Yankee Intact Spent Fuel" to "Maine Yankee Undamaged Spent Fuel"

25. Page 3.6-3, 1st paragraph, 1st sentence – changed "intact fuel assembly" to "undamaged fuel assembly"; 3rd paragraph, 2nd sentence – changed "intact fuel" to "undamaged fuel"

26. Page 4.1-2, 3rd paragraph, 3rd sentence – added "assemblies" and changed "ISG-11, Revision 2" to "ISG-11, Revision 3"; 4th sentence – replaced "For either of these fuel types" with "Additionally"; added new sentences 5-8 to describe limit for thermal cycling of higher burnup fuel

27. Page 4.4.5-4, Table 4.4.5-1 – added "(Fission Gas Basis – 60 GWd/MTU, 1.9 wt % ^{235}U)" to table title

28. Page 4.5-8, 3rd paragraph, 6th sentence – changed "intact fuel assembly" to "undamaged fuel assembly"

29. Page 4.6-4, Reference 38 – changed "Revision 2" to "Revision 3"; added new Reference 39

30. Page 5.2-4 – added new last paragraph to Section 5.2.3 to explicitly state that nondesign basis sources are generated within the context of the Section 5.5 minimum cool timetable analysis

31. Page 5.2-5, Section 5.2.4, BWR Fuel Assembly Descriptions, 1st paragraph, 1st sentence – changed "intact BWR fuel assemblies" to "undamaged BWR fuel assemblies"

32. Page 5.2-6 –added new last paragraph to Section 5.2.4 to explicitly state that nondesign basis sources are generated within the context of the Section 5.5 minimum cool timetable analysis

33. Page 5.6.1-11, Section 5.6.1.4.4, Consolidated Fuel, 3rd paragraph, 1st sentence – changed "intact assembly" to "undamaged assembly"

34. Page 5.6.1-12, Section 5.6.1.4.5, Damaged Fuel and Fuel Debris, 1st paragraph, 4th sentence – changed "intact fuel assembly" to "undamaged fuel assembly"; last sentence – changed "intact rods" to "undamaged rods"; 3rd paragraph, 1st sentence – changed "intact fuel assemblies" to "undamaged fuel assemblies"

35. Page 6.1-1, Section 6.1, Discussion and Results, 1st paragraph, 2nd sentence – changed "intact" to "undamaged" in 2 places

36. Page 6.1-2, 3rd paragraph, 6th sentence – changed "intact" to "undamaged"

37. Page 6.6.1-1, Section 6.6.1.1, Maine Yankee Fuel Criticality Model, 2nd sentence – changed "intact fuel types" to "undamaged fuel types"

38. Page 6.6.1-2, Section 6.6.1.2 – changed title from "Maine Yankee Intact Spent Fuel" to "Maine Yankee Undamaged Spent Fuel"; 1st sentence – changed "intact" to "undamaged"; 2nd sentence – changed "intact" to "undamaged"

39. Page 6.6.1-5, Section 6.6.1.2.5, Assemblies with Fuel Rods in the Guide Tubes, 1st paragraph, 1st sentence – changed "intact" to "undamaged" in 3 places; 2nd paragraph, 2nd sentence – changed "intact" to "undamaged"

40. Page 6.6.1-6, Section 6.6.1.2.6, Consolidated Fuel, 1st paragraph, 1st sentence – changed "intact fuel rods" to "undamaged fuel rods"

41. Page 6.6.1-7, 5th bullet – changed "intact fuel rods" to "undamaged fuel rods"; 2nd paragraph, 2nd sentence – changed "intact assemblies" to "undamaged assemblies"; Section 6.6.1.3, Maine Yankee Damaged Spent Fuel and Fuel Debris, 2nd paragraph, 2nd sentence – changed "intact fuel assembly" to "undamaged fuel assembly"

42. Page 6.6.1-11, Section 6.6.1.4.3, Maine Yankee Miscellaneous Component Loading Restrictions, item 2) – changed "intact" to "undamaged"; item 3) – changed "intact" to "undamaged"; item 4), 1st sentence – changed "intact" to "undamaged"; item 6) – changed "intact" to "undamaged"

43. Page 7.1-1, Section 7.0, Confinement, 1st paragraph – deleted last sentence; 3rd paragraph, 1st sentence – revised to state that the canister has been designed, fabricated and tested to assure that the NAC-UMS® canister confinement boundary has no credible leakage during storage

44. Page 7.1-2, 2nd full paragraph, 7th sentence – revised throughout to clarify helium leakage testing to ensure no credible leakage from the confinement boundary; last paragraph, last sentence – revised to delete the use of the term "leak tightness" to describe the UMS® confinement system and to replace by "no credible leakage"

45. Page 7.1-4, Section 7.1.1.3, Release Rate, 2nd and 3rd paragraphs – revised throughout to define the requirements for shield lid weld leakage testing; Section 7.1.2, Confinement Penetrations, 1st paragraph, old 3rd sentence made into 2 new sentences for clarification of process

46. Page 7.1-5, 1st paragraph, 1st sentence – changed "both" to "either"; 2nd sentence – changed "the penetrations" to "both penetrations"; deleted old 3rd sentence; new 3rd sentence – changed "With the port covers welded in place" to "When the port covers are in place"; 4th sentence – changed "The port covers" to "These port covers"

47. Page 7.1-6, 2nd paragraph, 1st sentence – changed "(gas over water)" to "(air/nitrogen/helium over water)"; 5th sentence – deleted old 6th sentence; new 6th sentence – changed "pressure tested" to "pressure and leak tested"

48. Page 7.3-1, Section 7.3, Confinement Requirements for Hypothetical Accident Conditions, 4th paragraph, 2nd sentence – revised to delete the use of the term "leak tightness" to describe the UMS® confinement boundary and to replace by "no credible leakage"

49. Page 7.4-1, Section 7.4, Confinement Evaluation for Site Specific Spent Fuel, 2nd paragraph, 1st sentence – revised to state that the canister has been designed, fabricated and tested to assure that the NAC-UMS® canister confinement boundary has no credible leakage (in place of leaktight); Section 7.4.1, Confinement Evaluation for Maine Yankee Site Specific Spent Fuel, 1st paragraph, last sentence – revised to delete the use of the term "leak tight" to describe the UMS® confinement boundary and to replace by "no credible leakage"; 2nd paragraph, last sentence – revised to delete the use of the term "leak tight" to describe the UMS® confinement boundary and to replace by "no credible leakage"; last paragraph, 1st sentence – changed "Intact" to "Undamaged"

50. Page 7.5-1, Section 7.5, References – deleted references #7 and #8 because the changed pages to implement ISG-18 and ISG-15 have been voided

51. Page 8.1.1-4, Item 27, Note – changed "Step 49" to "Step 47" to reflect changes made to cask operations steps

52. Page 8.1.1-5, 2nd Note – changed "(Step 34)" to "(Step 32)" to reflect changes made to cask operations steps

53. Page 8.1.1-6, Items 42, 44, 45, 46, 47, 48 and 49 – revised to reflect changes made to cask operation steps reinstating the helium leakage test; also deleted Item 44 Note

54. Pages 9.1-6 and 9.1-7, Section 9.1.3, Leak Tests – revised throughout to void proposed changes to the canister leakage testing sequence and return text to Revision 4 wording

55. Page 9.3-1, Section 9.3, References – reinstated reference #9 due to text change on Page 9.1-7

56. Page 11.2.2-1, Section 11.2.2, Failure of All Fuel Rods With a Ground Level Breach of the Canister – revised to delete the use of the term "leak tight" to describe the canister and to replace by "no credible leakage"

57. Page 11.2.15-5, Section 11.2.15.1.2, Parametric Study of Support Disk Evaluation for Maine Yankee Consolidated Fuel, 1st paragraph, 3rd sentence – changed "intact" to "undamaged"

58. Page 11.2.15-6, 1st full paragraph, 5th sentence – changed "intact" to "undamaged"

59. Page 11.2.16-1, Section 11.2.16, Fuel Rods Structural Evaluation for Burnup to 60,000 MWd/MTU, 1st paragraph – deleted "and BWR"; 2nd paragraph, last 2 sentences – revised to clarify that PWR assemblies (and rods) with missing or damaged grids are evaluated in this section and demonstrated to remain structurally sound.
    Note: BWR fuel assembly references are removed from this section.

60. Pages 11.2.16-1 through 11.2.16-4, Section 11.2.16.1, PWR Fuel Rod Evaluation, End Drop Evaluation subsection – revised fuel rod buckling evaluation to take into account the fuel pellet being independent of the fuel clad

61. Pages 11.2.16-5 and 11.2.16-6, Side Drop Evaluation subsection – revised side drop evaluation to include the stress calculations using an ANSYS model for stresses occurring in the fuel clad during the side drop (lateral loading) for the storage condition; deleted Section 11.2.16.2, BWR Fuel Rod Evaluation

62. Page 11.2.16-7, Figure 11.2.16-1 – added new figure titled "Three-Dimensional ANSYS Finite Element Model for UMS® Fuel Rod" to support the end drop evaluation

63. Page 11.2.16-8, Figure 11.2.16-2 – added new figure titled "Typical Three-Dimensional LS-DYNA Model for UMS® Fuel with a 1.23-Inch Bow" to support the end drop evaluation

64. Page 11.2.16-9, Figure 11.2.16-3 – added new figure titled "ANSYS Model for the PWR Fuel Rod High Burnup Condition" to support the side drop evaluation

65. Page 11.2.16-10, Section 11.2.16.2, Thermal Evaluation of Fuel Rods (revised section number due to deleted section noted in #59); 1st paragraph – added "temperature limits"; 2nd paragraph, 1st sentence – revised throughout to delete BWR reference and to be consistent with ISG-11, Revision 3

66. Page 11.3-5, Reference 61 – added the year of publication and the journal in which the paper was published; added new Reference 62 to support information in Section 11.2.16.1.

67. Page 12-2, Section 12.2.1, Operating Controls and Limits for Maine Yankee SITE-SPECIFIC FUEL, 2nd paragraph, 1st sentence – changed "PWR INTACT FUEL ASSEMBLIES" to "PWR UNDAMAGED FUEL ASSEMBLIES"

68. Page 12-3, 2nd paragraph, 2nd sentence – changed "INTACT FUEL ASSEMBLY" to "UNDAMAGED FUEL ASSEMBLY"

69. Page 12C2-1, C 2.0 APPROVED CONTENTS, BACKGROUND, 1st paragraph, 1st sentence – changed "INTACT FUEL" to "UNDAMAGED FUEL"

70. Pages 12C3-9 and 12C3-10, C 3.1.1, CANISTER Maximum Time in Vacuum Drying, BACKGROUND, 1st paragraph – revised throughout to remove the proposed deletion of the shield lid helium leakage test. Also made old 4th sentence into two sentences (editorial). Added 3 new paragraphs to the BACKGROUND section to clarify/justify limiting cooling/vacuum drying cycles for high burnup fuel.

71. Page 12C3-11, C 3.1.1, LCO – added new 2nd paragraph to clarify limiting cooling/vacuum drying cycles for high burnup fuel

72. Page 12C3-14, C 3.1.2, CANISTER Vacuum Drying Pressure, BACKGROUND, 1st paragraph – revised throughout to remove the proposed deletion of the shield lid helium leakage test. Also made old 4th sentence into two sentences (editorial). APPLICABLE SAFETY ANALYSIS, 3rd sentence – revised to clarify thermal cycling criteria for long-term integrity of the fuel and fuel cladding.

73. Page 12C3-15, C 3.1.2, CANISTER Vacuum Drying Pressure, APPLICABLE SAFETY ANALYSIS, 1st paragraph, 1st sentence – added "and thermal cycling"

74. Page 12C3-16, C 3.1.2, CANISTER Vacuum Drying Pressure, ACTIONS, A.1, last sentence – added "and thermal cycling"

75. Page 12C3-17, C 3.1.3, CANISTER Helium Backfill Pressure, BACKGROUND, 1st paragraph – revised throughout to remove the proposed deletion of the shield lid helium leakage test. Also made old 4th sentence into two sentences (editorial).

76. Page 12C3-20, C 3.1.4, CANISTER Maximum Time in the TRANSFER CASK, BACKGROUND, 1st paragraph – revised throughout to remove the proposed deletion of the shield lid helium leakage test. Also made old 4th sentence into two sentences (editorial).

77. Pages 12C3-25 through 12C3-27, C 3.1.5, CANISTER Helium Leak Rate – reinstated the performance of the helium leakage test of the canister shield lid welds with minor changes to describe canister preparation sequence

NAC INTERNATIONAL

RESPONSE TO THE

UNITED STATES
NUCLEAR REGULATORY COMMISSION

REQUEST FOR ADDITIONAL INFORMATION

(RAI – May 30, 2007)

NAC-UMS® UNIVERSAL STORAGE SYSTEM, PROPOSED AMENDMENT 5

(TAC NO. L24032, DOCKET NO. 72-1015)

AUGUST 2007

NAC INTERNATIONAL RESPONSE TO REQUEST FOR ADDITIONAL INFORMATION

TABLE OF CONTENTS FOR RAI RESPONSES

Page

GENERAL 3
CHAPTER 1 – GENERAL DESCRIPTION 5
CHAPTER 3 – STRUCTURAL EVALUATION 6
CHAPTER 4 – THERMAL EVALUATION 7
CHAPTER 5 – SHIELDING EVALUATION 10
CHAPTER 7 – CONFINEMENT 15
CHAPTER 8 – OPERATING PROCEDURES 18
CHAPTER 11 – ACCIDENT ANALYSIS 19
TECHNICAL SPECIFICATIONS 27

NAC INTERNATIONAL RESPONSE TO REQUEST FOR ADDITIONAL INFORMATION

GENERAL

G-1 Wherever the shield lid to canister shell is mentioned in the Safety Analysis Report (SAR), CoC, or Operating Instructions, a minimum three pass weld should be indicated.

Normally helium (He) leak testing is required on all welds that form a part of the confinement barrier. An exemption from the He- leak testing has been requested on this weld. In order to have an exemption, the weld must have a minimum of three passes and each layer must be PT examined.

This information is needed to meet the regulatory requirements of 10 CFR 72.236(1) that requires confinement of radioactive material be maintained under normal, off-normal, and accident conditions.

NAC International Response

NAC has revised the CoC amendment request to reinstitute the performance of the helium leakage test of the canister shield lid welds as currently licensed in Appendix A, Technical Specifications, Limiting Condition for Operation (LCO) A 3.1.5. The proposed wording and procedure changes as incorporated in the September 22, 2006 amendment request to implement ISG-18 and ISG-15 are voided. The currently approved shield lid weld design and the welding, inspection and testing sequence for the shield lid welds, as defined in the NAC-UMS® FSAR and Amendment 4 to the CoC for the NAC-UMS® system, remain unchanged and will continue to be utilized.

The NAC-UMS® FSAR is modified (Revision UMSS-07A) to reflect the reinstitution of the helium leakage test. Affected parts of the FSAR are Appendix A, Appendix B, Appendix 12C, Chapter 1 and Chapters 7 through 9. The affected pages are returned to the previously approved version unless otherwise noted.

Specific technical changes that remain or were added to the proposed amendment request are limited to:

- The procedure change to require only a single helium backfill with 99.9% pure helium to establish an appropriate nonoxidizing environment in the canister.

NAC INTERNATIONAL RESPONSE TO REQUEST FOR ADDITIONAL INFORMATION

NAC International Response to RAI G-1 (cont'd)

- The clarification to Chapter 7, Confinement, to incorporate the NRC recommended guidance on the use of "no credible leakage" in lieu of "leaktight."
- A correction to the Background section of the Bases for LCOs 3.1.1 through 3.1.5 to more accurately describe the canister preparation, welding and testing sequence.
- A revision to Section 1.2.1.1 to clarify that the canister has been designed, fabricated and tested to assure that the NAC-UMS® canister confinement boundary has no credible leakage during normal, off-normal or accident conditions of storage.

The term "leaktight" is replaced by "no credible leakage" or similar language throughout the FSAR. These changes were made in accordance with U.S. Nuclear Regulatory Commission RIS 2007-09: Examples of Recurring Requests for Additional Information (RAIs) for 10 CFR Part 71 and 72 Applications, Attachment 1, Item 7.a., dated May 4, 2007.

Refer to Attachment 1, List of Proposed Changes, for a detailed description of all changes to the NAC-UMS® FSAR.

NAC INTERNATIONAL RESPONSE TO REQUEST FOR ADDITIONAL INFORMATION

CHAPTER 1 GENERAL DESCRIPTION

1-1 Revise definitions of intact and damaged fuel to cover potential structural damage.

On page 1-3, and Table 2.1.1-1, Appendix A of the SAR, there appears to be an incongruity between the definitions of intact fuel and damaged fuel. For example, applying the current definitions, an assembly with missing or damaged grid spacers would be considered intact. If this is intended, assemblies with missing grid spacers should be analyzed as the limiting case.

This information is needed to meet the requirements of 10 CFR 72.122 that requires damaged fuel be canned.

Note: See also RAI TS-1.

NAC International Response

The definitions of intact fuel and damaged fuel in Chapter 1 and Appendix A are revised. The revised definitions invoke structural constraints and contain definitions per ISG-1, Revision 2 – i.e., allowed content is revised to "undamaged fuel" rather than "intact fuel." As demonstrated in Section 11.2.16, PWR assemblies are permitted to have missing or damaged grids for an unsupported fuel rod length up to 60 inches. The revised definitions for undamaged (previously referred to as intact) and damaged fuel, therefore, include these criteria.

NAC INTERNATIONAL RESPONSE TO REQUEST FOR ADDITIONAL INFORMATION

CHAPTER 3 STRUCTURAL EVALUATION

3-1 Update Section 3.3.2, "Fracture Toughness Considerations," and Section 11.2.16, "Fuel Rods Structural Evaluation for Burn-up to 60,000 MWd/MTU," by providing explanation for inclusion of calculations pertaining to BWR high burnup damaged fuel and PWR fuel.

The amendment request to include high burn-up fuel is for PWR fuel. An explanation of why both types of equations are included in the contents of the SAR would provide better clarification for the reviewer/reader.

This information is needed to meet the regulatory requirements of 10 CFR Part 72.11 requiring completeness and accuracy of the information.

NAC International Response

Section 3.3.2 relates to the BWR basket structural disks and, as such, is not related to the high burnup fuels. Section 3.3.2 is, therefore, retained in the FSAR as is.

Section 11.2.16 is revised to remove all BWR fuel assembly references.

NAC INTERNATIONAL RESPONSE TO REQUEST FOR ADDITIONAL INFORMATION

CHAPTER 4 THERMAL EVALUATION

4-1 Adjust the moles in Table 4.4.5-1 for the new maximum burnup of 60 GWd/MTU. State the burnup in the caption where the moles are applicable.

It is unclear whether the moles of fission gas in the table are for a burnup of 60 GWd/MTU.

This information is needed to meet the regulatory requirements of 10 CFR 72.236(1) and 10 CFR 72.24(l)(1) that requires confinement of radioactive material be maintained under normal, off-normal and accident conditions. Also, 10 CFR 72.11 requires completeness and accuracy of information.

NAC International Response

As stated in the second paragraph of Section 4.4.5.1, "... PWR inventories are extracted from 60,000 MWd/MTU burnup cases ...." The inventories were conservatively calculated at 60 GWd/MTU in previous revisions of the NAC-UMS® FSAR and, therefore, did not, and do not, require any adjustment.

The burnup (60 GWd/MTU) and initial enrichment (1.9 wt.% ^{235}U) basis for the molar inventories are added to the caption of Table 4.4.5-1 as a response to this RAI.

NAC INTERNATIONAL RESPONSE TO REQUEST FOR ADDITIONAL INFORMATION

CHAPTER 4 THERMAL EVALUATION

4-2 Justify that the thermal analyses satisfy appropriate temperature limits and cycling temperature differentials (per ISG-11) for proposed fuel loadings, consistent with the operational procedures. Verify Chapters 4, 8, 11, and proposed technical specifications for canister drying, are consistent in this manner.

It does not appear that thermal cycling limits have been addressed in the thermal analyses. This information is needed to meet the regulatory requirements of 10 CFR Part 72.11 requiring completeness and accuracy of the information.

NAC International Response

Change in fuel clad temperature created during the canister loading operation is dependent on the specific canister heat load and operational cycles for draining, drying and transfer operations. Heat transfer calculations representing the canister processing operational cycle for different heat loads show that the fuel cladding temperature may exceed ISG-11, Revision 3, guidance limiting changes in temperature to less than 117°F (65°C) and the number of thermal cycles to fewer than 10 cycles for fuel having burnup greater than 45 GWd/MTU. The NAC-UMS® high burnup amendment has adopted an alternative to ISG-11, Revision 3, guidance based on the ISG reference addressing the migration of hydrogen provided by Kammenzind. Criteria adopted by the NAC-UMS® system for fuel having burnup greater than 45 GWd/MTU requires normal and loading operation fuel clad temperatures to remain less than 400°C and changes in fuel clad temperature greater that 117°F (65°C) are limited to 10 cycles. These system limits are defined in the Technical Specifications and assure high burnup fuel is not subject to hydride reorientation during the system loading.

Verification that hydrogen transfer will not be introduced into the fuel rod cladding to a level that would impact structural performance is based on the physical testing performed and reported by B.F. Kammenzind, B. M. Berquist and R. Bajaj in their publication titled "The Long Range Migration of Hydrogen Through Zircaloy in Response to Tensile and Compressive Stress Gradients." The test program investigates hydrogen transfer in stressed and thermally cycled test specimens. Test results show the following:

NAC INTERNATIONAL RESPONSE TO REQUEST FOR ADDITIONAL INFORMATION

NAC International Response to RAI 4-2 (cont'd)

- Zero hydrogen transfer for test specimens subject to 25 thermal cycles between 260°C and 50°C at a stress level of 160 MPa.
- Zero hydrogen transfer for test specimens subject to 10 thermal cycles between 260°C and 50°C at a stress level of 241 MPa.

Test results for temperature cycles to maximum temperatures of 316°C and 371°C show small levels of hydrogen transfer (i.e., 2.7 to 7.2 ppm) for 10 and 25 thermal cycles.

This data, as referenced by ISG-11, Revision 3, indicates that the minimum temperature difference used in the test program, 210°C (260°C -50°C), which is significantly greater than the 65°C limit defined as ISG guidance, does not introduce hydrogen transfer. Thus, the stored fuel and its cladding remain undamaged and may be retrieved using normal means of handling.

There are no evaluated normal conditions, transfer conditions, off-normal events or accident conditions that result in deterioration of, or damage to, the fuel cladding or the Transportable Storage Canister (TSC) that preclude retrieval of the fuel from the TSC or retrieval of the TSC from the vertical concrete cask for transport and ultimate disposal. Also, operational experience with the NAC-UMS® and similar MPC systems has demonstrated vacuum drying cycles are limited to 1 to 2 (3, maximum). It is noted that system operating procedures and user experience for the loaded NAC-UMS® systems have matured to permit the system loading operations at the Arizona Public Service Company's Palo Verde site and Duke Energy's McGuire and Catawba sites to complete system loading without introducing thermal cycles from multiple drying operations.

FSAR text has been revised in Section 4.1 to reference ISG-11, Revision 3, and thermal cycle limits imposed for high burnup fuel. Technical Specification LCO 3.1.1 has been revised to control the number of fuel cladding temperature changes greater than 117°F (65°C) to fewer than 10 cycles, and Appendix 12C, C 3.1.1 has been revised to present the basis for the imposed limits controlling hydride reorientation in fuel with burnup greater than 45 GWd/MTU.

NAC INTERNATIONAL RESPONSE TO REQUEST FOR ADDITIONAL INFORMATION

CHAPTER 5 SHIELDING EVALUATION

5-1 Provide additional information explaining why the existing source term evaluation and dose rate evaluation, which is based on a burnup of 40,000 MWd/MTU, is bounding for the higher burnup of 60,000 MWd/MTU.

This amendment requests burnup for PWR fuel increase from 40,000 MWd/MTU to 60,000 MWd/MTU. However, the source term evaluation in SAR Section 5.2, "Source Specification," does not provide any information on what the source term would be for PWR fuel with the higher burnup. Please provide additional clarification in the SAR to explain the limiting dose rate based on the design basis calculations from Rev 0 of the SAR.

This information is necessary to determine compliance with 10 CFR Part 72.104 and 72.106.

NAC International Response

Section 5.2 of the FSAR includes source terms associated with design basis dose rates, i.e., source terms at a burnup, initial enrichment and cool time producing the maximum dose rates documented in Section 5.1 of the FSAR. Design basis dose rates are based on source terms produced by 5-year-cooled fuel at a burnup of 40 GWd/MTU with initial enrichment of 3.25 wt% ^{235}U for BWR systems and 3.7 wt% ^{235}U for PWR systems. Prior to initial licensing of the UMS® System, FSAR Section 5.5 was added to address the method and data for variations in maximum burnup, including a higher burnup of up to 45 GWd/MTU and minimum initial enrichments. Section 5.5, in particular Section 5.5.3, states:

"Storage cask and standard transfer cask radial surface dose rates for the design basis assemblies are presented in Tables 5.1-1 through 5.1-4. The design basis radial storage and transfer cask (dry cavity) dose rates are used as an upper bound dose rate limit for any other fuel assembly type, burnup, and enrichment combination."

Design basis dose rates are determined from the initial 40 GWd/MTU input per Section 5.4. Section 5.5.4 contains the strategy that assures that dose rates obtained from assemblies with

NAC INTERNATIONAL RESPONSE TO REQUEST FOR ADDITIONAL INFORMATION

NAC International Response to RAI 5-1 (cont'd)

variations in maximum burnup and minimum initial enrichment from the initial design basis are not exceeded. The analysis strategy from Section 5.5.4 is:

a) Determine decay heat and dose rate values at each cooling time step.
b) Interpolate in the resulting collection of data to find minimum cooling time required to meet each limiting value, decay heat, and transfer and storage cask dose rate, individually.
c) Select the maximum of this collection of minimum required cooling times, rounded up to the next whole year, as the minimum required cooling time for this combination of burnup, enrichment and cooling time.

Stated differently, if necessary, the minimum cool time for fuel assemblies is extended for nondesign basis burnup, including high burnup, until dose rates are below those calculated for the 40 GWd/MTU initial design basis.

As detailed descriptions for the analysis method have been included in the FSAR, no changes to the method description are made. FSAR Section 5.2, Section 5.2.3 and 5.2.4, are modified to explicitly state that nondesign basis sources are generated within the context of the Section 5.5 minimum cool timetable analysis. The cool time table generation method produced hundreds of source terms (# of burnup steps × the # of initial enrichment × the # of cool times) for each fuel type. To limit the size of the FSAR to reasonable levels, only the "design basis" source is shown in the FSAR.

NAC INTERNATIONAL RESPONSE TO REQUEST FOR ADDITIONAL INFORMATION

CHAPTER 5 SHIELDING EVALUATION

5-2 Verify that the SCALE version 4.3 is adequate for determining fuel depletion and source term for high burnup fuel.

According to the information in SAR Section 5.2, code sequences from the SCALE 4.3 code package were used to determine the fuel depletion and source term. The most current version of the SCALE code updates a number of the code sequences and revises several libraries to reflect the most recent data. Benchmarking the code for new configurations is necessary.

This information is necessary to determine compliance with 10 CFR Part 72.104 and 72.106.

NAC International Response

NAC included a revised Section 5.2 in the amendment request (UMSS-06A) to address the adequacy of the SCALE sequence to predict source terms for the high burnup fuel. The relevant FSAR section including references is duplicated below.

"References [24] through [28] contain extensive SAS2H validation for PWR burnups up to 47 GWd/MTU and BWR burnups up to 57 GWd/MTU. As indicated in the reference documentation, the SAS2H sequence is applicable to LWR fuel assembly source term generation for high burnup fuel. Open literature validations of the SCALE SAS2H sequence versus experimental data do not extend to the system allowable burnup of 62.5 GWd/MTU peak average rod. Studies performed in NUREG/CR-6701 (Appendix B) [29] indicate no analysis trends in system sensitivity for LWR evaluations up to a burnup of 75 GWd/MTU. As such, the SAS2H sequence is applicable to the high burnup fuel evaluated. Not all benchmarking referenced employed SAS2H as a component of SCALE 4.3 with the 27-group library as employed in the UMS® source term generation. References also employed SCALE 4.4 with the 44-group library. NAC comparisons indicate good agreement for PWR source terms generated using the two methods."

NAC INTERNATIONAL RESPONSE TO REQUEST FOR ADDITIONAL INFORMATION

NAC International Response to RAI 5-2 (cont'd)

24. ORNL/TM-12667, "Validation of the SCALE System for PWR Spent Fuel Isotopic Composition Analyses," Oak Ridge National Laboratory, March 1995.
25. ORNL/TM-13317, "An Extension of the Validation of SCALE (SAS2H) Isotopic Prediction for PWR Spent Fuel," Oak Ridge National Laboratory, September 1996.
26. NUREG/CR-6798, "Isotopic Analysis of High Burnup PWR Spent Fuel Samples from the Takahama-3 Reactor," US Nuclear Regulatory Commission, January 2003.
27. ORNL/TM-13315, "Validation of SCALE (SAS2H) Isotopic Predictions for BWR Spent Fuel," Oak Ridge National Laboratory, September 1998.
28. ORNL/TM-13687, "Prediction of the Isotopic Composition of UO_2 Fuel from a BWR: Analysis of the DU1 Sample from the Dodewaard Reactor," Oak Ridge National Laboratory, October 1998.
29. NUREG/CR-6701, "Review of Technical Issues Related to Predicting Composition and Source Terms for High-Burnup LWR Fuel," US Nuclear Regulatory Commission, January 2001.

The references listed include benchmarks to burnup levels approaching the requested levels, 62.5 GWd/MTU peak rod, with a maximum burnup documented at 57 GWd/MTU. Based on the 62.5 GWd/MTU peak rod burnup requested, the assembly average burnup will not significantly exceed, and is likely lower than, the referenced value and, therefore, demonstrates adequate benchmarking of the SCALE sequence.

As noted, not all references employed the same version of SCALE. To address differences in the code versions, NAC relies on its internal QA and benchmark programs. NAC's QA program requires that all error messages (including RSICC and SCALE newsletters) be reviewed and dispositioned. Any code error in the sequences employed at NAC invokes a "Program Error Report." To NAC's knowledge, there are no code errors or bugs that would require a newer version of SCALE to be employed in the PWR high burnup assembly source evaluations. Note that NAC recognizes that over the years, a number of enhancements and corrections were made to the code sequence. None were judged to have a material effect on the results generated.

NAC INTERNATIONAL RESPONSE TO REQUEST FOR ADDITIONAL INFORMATION

NAC International Response to RAI 5-2 (cont'd)

Significant changes in the source production are closer associated with revisions in the cross-section libraries contained within the various SCALE distributions. Currently recommended by ORNL for PWR evaluations is the 44-group ENDF/B-V library rather than the 27-group ENDF Version IV library employed in the UMS® evaluations. An updated cross-section will modify results of the calculations. For example, the 44-group library contains updated Eu cross-sections from ENDF/B-VI data, significantly reducing the burned fuel Eu and Gd inventories. NAC code validation of SCALE 4.3 (27-group) versus SCALE 4.4 and 5.0 (44-group) has indicated that differences in source for typical UMS® cases have negligible system effects. Later versions of SCALE with newer libraries produce slightly lower heat load and gamma source, with a small increase in neutron source. Since UMS® system dose rates are typically gamma dominated, the overall effect is a minimal decrease in calculated results.

NAC INTERNATIONAL RESPONSE TO REQUEST FOR ADDITIONAL INFORMATION

CHAPTER 7 CONFINEMENT

7-1 Revise Section 7.0 of the SAR to remove any statements to the effect that the NAC-UMS System confinement boundary is leaktight as defined by ANSI N14.5-1997, "American National Standard for Radioactive Materials – Leakage Tests on Packages for Shipment."

ANSI N14.5-1997 defines leaktight as a degree of containment achieved by demonstration of a leakage rate less than or equal to 1×10^{-7} ref cm^3/s of air at an upstream pressure of 1 atmosphere (atm) absolute (abs), and a downstream pressure of 0.01 atm abs or less. Since the entire confinement boundary is no longer tested to this criterion, it does not meet the definition of leaktight. Note that, although not considered leaktight, final closure welds that meet the provisions of Interim Staff Guidance 18 (ISG-18), "The Design/Qualification of Final Closure Welds on Austenitic Stainless Steel Canisters as Confinement Boundary for Spent Fuel Storage and Containment Boundary for Spent Fuel Transportation," are considered to have no credible leakage during storage.

This information is needed to ensure that the cask system confinement boundary final closure weld complies with the provisions of ISG-18, in lieu of leakage rate testing.

NAC International Response

As discussed in the response to RAI G-1, NAC has revised the proposed amendment request to delete the term "leaktight" from Section 7.0 of the FSAR in accordance with the guidance of NRC RIS 2007-09. As appropriate, editorial changes have been made to Chapter 7 to define that the design, fabrication and testing of the confinement boundary assures no credible leakage from the canister during normal, off-normal and accident conditions of storage. Editorial changes have also been made throughout the FSAR to replace the term "leaktight" with "no credible leakage" or similar language. These changes were made in accordance with U.S. Nuclear Regulatory Commission RIS 2007-09: Examples of Recurring Requests for Additional Information (RAIs) for 10 CFR Part 71 and 72 Applications, Attachment 1, Item 7.a., dated May 4, 2007.

NAC INTERNATIONAL RESPONSE TO REQUEST FOR ADDITIONAL INFORMATION

NAC International Response to RAI 7-1 (cont'd)

In addition, as described in response to RAI G-1, the proposed deletion of LCO 3.1.5, CANISTER Helium Leak Rate, from the Technical Specifications has been voided and withdrawn. Therefore, the currently licensed closure, NDE and testing sequence defined in Amendment 4 to the NAC-UMS® CoC will remain applicable.

NAC INTERNATIONAL RESPONSE TO REQUEST FOR ADDITIONAL INFORMATION

CHAPTER 7 CONFINEMENT

7-2 Revise Section A5.5 of the Technical Specifications, "Radioactive Effluent Control Program," to remove the reference to LCO 3.1.5, "CANISTER Helium Leak Rate."

LCO 3.1.5 is being removed from the Technical Specifications and, therefore, cannot be given as a justification that there are no radioactive effluents from the NAC-UMS® System. This section should include a revised justification, e.g., the provisions of ISG-18, combined with leak testing of the vent and drain port covers.

This information is needed to ensure that the cask system will continue to meet the requirements of 10 CFR 72.126(d) for effluent control.

NAC International Response

Refer to responses to RAIs G-1 and 7-1 for details on the withdrawal of the proposed request to delete LCO 3.1.5, CANISTER Helium Leak Rate, from the NAC-UMS® Technical Specifications. All the appropriate pages and sections containing the proposed changes to the FSAR have been modified, as appropriate, to reestablish the previously approved FSAR and Amendment 4 of the CoC defining the requirements for shield lid weld leakage testing.

Therefore, the shield lid helium leakage test performance can continue to be used as justification that there are no radioactive effluents from the NAC-UMS® System based on no credible leakage from the confinement boundary during storage.

NAC INTERNATIONAL RESPONSE TO REQUEST FOR ADDITIONAL INFORMATION

CHAPTER 8 OPERATING PROCEDURES

8-1 Revise the vent and drain port cover weld leakage rate test procedures to comply with the provisions of ANSI N14.5-1997.

ANSI N14.5-1997, Section 8.1, states that "Tests shall be designed to preclude false acceptance; this includes assuring the presence of a tracer gas and a driving pressure." If the vent and drain port valves are closed at the time of the leak test, there will be no helium available to test the vent and drain port cover weld integrity. Either clarify the test procedure ensuring the presence of a tracer gas behind the confinement weld to be tested, or use a different type of test that does not require a tracer gas.

This information is needed to ensure that the NAC-UMS System will meet the confinement requirements of 10 CFR 72.104 and 10 CFR 72.126.

NAC International Response

As discussed and described in the responses to RAIs G-1, 7-1 and 7-2, NAC has withdrawn the proposed change request to delete the helium leakage testing of the shield lid welds. Therefore, the helium leakage testing as specified and required per LCO 3.1.5 of the NAC-UMS® Technical Specifications has been reinstituted. In order to implement the reinstitution of the helium leakage test, the proposed changes to Chapters 1, 7, 8 and 9, and the Technical Specifications and their Bases included in the September 22, 2006 amendment request have been modified to return these chapters and sections to the as-licensed revision (i.e., CoC Amendment 4 and applicable FSAR page revisions), except as specifically noted and discussed in the response to RAI G-1.

The helium leakage test sequence, procedures and acceptance criteria previously utilized in the preparation, closure and placement into storage of over 131 NAC-UMS® Systems (plus over 44 NAC-MPC Systems that utilized the identical sequencing, equipment and processes) will continue to be utilized for future NAC-UMS® System loading operations. In this helium leakage test sequence, a helium test cover is installed over the top of the canister shell, and the entire volume below the test cover and above the shield lid is evacuated and sampled for helium leakage past any of the shield lid welds.

NAC INTERNATIONAL RESPONSE TO REQUEST FOR ADDITIONAL INFORMATION

CHAPTER 11 ACCIDENT ANALYSIS

11-1 Revise Chapter 11 of the SAR to clarify the definitions of intact fuel and damaged fuel using current data for high burn-up PWR fuel.

In the analysis presented in Section 11.2.16 to justify the adequacy of the fuel rods (cladding) for PWR high burn-up fuel, it is unclear whether an assembly with missing or damaged grids is considered intact fuel or damaged fuel. If it is designated as damaged fuel, then special damaged fuel canisters are required to be used.

This information is needed to meet the requirements of 10 CFR Part 72.122 that mandates damaged fuel to be canned.

NAC International Response

Section 11.2.16 is revised to clarify that PWR assemblies (and rods) with missing or damaged grids are evaluated in this section and demonstrated to remain structurally sound. Since the assembly and rods remain structurally sound during all design basis conditions, they are classified as undamaged. The analysis result supports the revised definitions of undamaged and damaged fuel in Chapter 1 and Appendix A. Per RAI 3-1, BWR fuel assembly references are removed from Section 11.2.16.

NAC INTERNATIONAL RESPONSE TO REQUEST FOR ADDITIONAL INFORMATION

CHAPTER 11 ACCIDENT ANALYSIS

11-2 In Section 11.3, provide additional information for Reference 61, "Mechanical Properties of Irradiated Zircaloy" including the year of publication, and details of journal and/or conference at which the paper was published.

It is unclear which "paper" by Geelhood and Beyer has been referenced for the source of modulus of elasticity for the irradiated zirconium alloy cladding.

This information is needed to ensure that regulatory requirements of 10 CFR 72.11 which call for completeness and accuracy of information are met.

NAC International Response

Reference 61, "Mechanical Properties of Irradiated Zircaloy", is contained in the Transactions of the American Nuclear Society, Volume 93, 2005, page 707. This reference, which is listed in Section 11.3, has been revised to include the specific transaction in which it was published and the associated year.

NAC INTERNATIONAL RESPONSE TO REQUEST FOR ADDITIONAL INFORMATION

CHAPTER 11 ACCIDENT ANALYSIS

11-3 Remove the reference to BWR fuel in Section 11.2-16.

The amendment request to include high burnup fuel is for PWR fuel only.

This information is needed to ensure that regulatory requirements of 10 CFR 72.11 which call for completeness and accuracy of information are met.

NAC International Response

BWR fuel evaluations are removed from Section 11.2.16 as only PWR high burnup fuel is requested in the amendment.

NAC INTERNATIONAL RESPONSE TO REQUEST FOR ADDITIONAL INFORMATION

CHAPTER 11 ACCIDENT ANALYSIS

11-4 Provide revised calculations for the structural evaluation of high burnup fuel cladding for all evaluations in which the flexural rigidity (EI) of the fuel pellet has been used in the computation of the flexural rigidity of the fuel rod. The revised calculations must only take credit for the flexural rigidity of the fuel cladding in the computation of fuel rod bending stiffness.

In Section 11.2.16 of the Amendment Request, the calculations pertaining to the structural evaluation of high burn-up fuel cladding for axial loading (end drop) references the methods and calculations in Section 11.2.15.1.5 of the FSAR, and for lateral loading (side drop) references Section 11.2.15.1.6 of the FSAR. The structural evaluations in the referenced sections compute the flexural rigidity (EI) of the fuel rod as the sum of the flexural rigidity of the cladding and 50 percent of the flexural rigidity of the fuel pellets. The fuel in high burn-up fuel rods is highly fractured and granular, and the rim region between the cladding and the granular fuel is comprised of even finer particles. In addition, during the cooling of the rods after their removal from the reactor, the fuel tends to shrink more than the cladding, widening the interface between the granular particles and between the fuel and cladding. Under these conditions, it is not physically possible for the fuel to possess bending stiffness, and the NRC Staff knows of no basis for making such an assumption.

This information is needed to assure the requirements of 10 CFR Part 72.122(b), which require all SSCs important to safety to be designed to withstand postulated accidents, are met.

NAC International Response

The evaluation of the fuel rod buckling for high burnup fuel in Section 11.2.16 has been revised to represent the fuel pellet being independent of the fuel clad. In the revised analysis, the stiffness [EI (bending) or extensional] of the pellet does not contribute to the stiffness of the cladding. An LS-DYNA analysis is performed for the end drop condition in which the fuel clad is modeled with shell elements and the fuel pellets are modeled with brick elements. In the analysis, the fuel rod is assumed to have a preexisting bow of 1.23 inches, which is 0.06 inch more than the maximum bow the smallest cross-section design basis fuel can have and still be inserted in the UMS® basket. The dynamic analysis employs a maximum deceleration of 48g's, which significantly bounds the maximum acceleration reported for the 24-inch end drop of the concrete cask. This analysis is contained in Section 11.2.16.

NAC INTERNATIONAL RESPONSE TO REQUEST FOR ADDITIONAL INFORMATION

NAC International Response to RAI 11-4 (cont'd)

Likewise, for lateral loading (side drop), Section 11.2.16 presents a static evaluation using 60g's and limits the structural properties to the clad. The models incorporated a maximum spacing of 60 inches between adjacent grids (or from the end of the rod to the first grid). The static evaluation for the side drop was performed using ANSYS and is presented in the revised Section 11.2.16. The NAC proprietary calculations containing the data input and output files will be submitted as requested by the NRC staff under separate cover.

These analyses show that the fuel rod with a missing grid over the first 60 inches of assembly height maintains structural integrity when considering high burnup material properties for the fuel cladding and when subject to the 24-inch end drop for the storage condition or the lateral loads developed from the nonmechanistic tip-over accident condition.

NAC INTERNATIONAL RESPONSE TO REQUEST FOR ADDITIONAL INFORMATION

CHAPTER 11 ACCIDENT ANALYSIS

11-5 Provide the appropriate pages in Reference 47 (Clough and Penzien), in Section 11.2.15.1.5, to document the derivation of the DLF. Include a complete description of the equations used to compute first extensional mode frequency and first lateral mode frequency. Also, provide the basis and documentation for the vertical acceleration of 37.9g that corresponds to the first buckled mode shape. Provide the same information for the calculation of the 4.3g acceleration in Section 11.2.15.1.6.

In Section 11.2.16 of the Amendment Request, the calculations pertaining to the structural evaluation of high burn-up fuel cladding for axial loading (end drop) references the methods and calculations in Section 11.2.15.1.5 of the FSAR, and for lateral loading (side drop) references Section 11.2.15.1.6 of the FSAR. No documentation, calculations, or ANSYS input and output files have been provided to substantiate these values.

This information is needed to meet the requirements of 10 CFR Part 72.11 establishing the completeness and accuracy of the information.

NAC International Response

Section 11.2.16 contains a new analysis which employs an end drop transient evaluation that incorporates the effect of the transient deceleration occurring during the end drop. Therefore, the calculation of the DLF using Reference 47 is not required.

Likewise for the lateral loading, Section 11.2.16 is revised to include the calculations of the stress (using an ANSYS model) occurring in the fuel clad during the side drop (lateral loading). Section 11.2.16 contains a description of the analysis. The NAC proprietary calculations and data input and output files will be submitted as requested by the NRC staff under separate cover.

NAC INTERNATIONAL RESPONSE TO REQUEST FOR ADDITIONAL INFORMATION

CHAPTER 11 ACCIDENT ANALYSIS

11-6 Provide a calculation that is consistent with the initial conditions of 60g loading in Section 11.2.15.1.6, Side Drop Evaluation.

In Section 11.2.16 of the Amendment Request, the calculations pertaining to the structural evaluation of high burn-up fuel cladding for axial loading (end drop) references the methods and calculations in Section 11.2.15.1.5 of the FSAR, and for lateral loading (side drop) references Section 11.2.15.1.6 of the FSAR. The calculation states that the evaluation is for a 60g loading, but then proceeds to perform a displacement limited analysis to calculate cladding stresses that has nothing to do with the 60g loading.

This information is needed to meet the requirements of 10 CFR Part 72.11 demonstrating the completeness and accuracy of the information.

NAC International Response

For the lateral loading (side drop), Section 11.2.16 has a new static evaluation using 60g's for the side drop that employs only the structural properties of the clad. The models incorporated a maximum spacing of 60 inches for the grids (or from the end of the rod to the first grid). The static evaluation was performed using ANSYS and the revised analyses and their models are documented in the revised Section 11.2.16. The NAC proprietary calculations containing the data input and output files will be submitted as requested by the NRC staff under separate cover.

NAC INTERNATIONAL RESPONSE TO REQUEST FOR ADDITIONAL INFORMATION

CHAPTER 11 ACCIDENT ANALYSIS

11-7 Clarify the short term cladding limits used in the accident analyses for high burnup fuel.

There appears to be a mis-reference to 570°C as the short term cladding limit for high burnup fuel, instead of 400°C.

This information is needed to meet the regulatory requirements of 10 CFR Part 72.11 requiring completeness and accuracy of the information.

NAC International Response

The use of a 400°C normal and short-term loading operations maximum fuel clad temperature limit and a 570°C short-term off-normal and accident condition maximum fuel clad temperature limit in the September 22, 2006 NAC amendment request is consistent with ISG-11, Revision 3, "Cladding Considerations for the Transportation and Storage of Spent Fuel."

Per ISG-11, Revision 3, Page 2, Item 1: "For all burnup (low and high), the maximum calculated fuel cladding temperature should not exceed 400°C (752°F) for normal conditions of storage and short-term loading operations (e.g., drying, backfilling with inert gas, and transfer of the cask to the storage pad)." Note that this section does not include any statement restricting short-term off-normal operations invoked in the UMS® FSAR, Chapter 11, to meet the 400°C limit. Specifically, Page 3, Item 3 of the ISG-11, Revision 3, states: "For off-normal and accident conditions, the maximum cladding temperature should not exceed 570°C (1058°F)."

NAC INTERNATIONAL RESPONSE TO REQUEST FOR ADDITIONAL INFORMATION

TECHNICAL SPECIFICATIONS

TS-1 Modify the definitions of intact fuel and damaged fuel to add the restriction that: "A fuel assembly with missing fuel rods shall not be classified as an intact fuel assembly unless solid filler rods are used to displace an amount of water equal to that displaced by the original fuel rods."

The current definitions of intact and damaged fuel are not supported by the current criticality analysis. The stated restriction was a part of the definition in a previous amendment. It appears that the definitions were modified to account for the inclusion of Maine Yankee (MY) fuel that was considered intact with the exception of a number of fuel rods missing from the fuel rod array of several assemblies. In that amendment (Amendment 1), the applicant provided an analysis to support the inclusion of these assemblies and restricted them to the corner locations of the PWR spent fuel basket. However, no analysis has been provided to support loading generic PWR or BWR assemblies that are missing fuel rods as intact fuel. Under the current definitions of intact and damaged fuel, PWR and BWR assemblies missing any number of fuel rods in any location of the fuel rod array could be loaded as intact fuel. The current criticality analysis does not support such a condition.

The staff also notes that Table B2-2 of Appendix B to the CoC contains a footnote for PWR assemblies that "Fuel rod positions may be occupied by burnable poison rods or solid filler rods." However, no such footnote is given in the following table (Table B2-3) for BWR assemblies. Also, the word "may" does not connote a requirement. Therefore, the definitions should be modified as described.

This information is needed to confirm compliance with 10 CFR 72.236(a) and (c).

NAC International Response

The Technical Specification definitions in Section A 1.1 are modified to include the requested definitions for "Intact Fuel" and "Damaged Fuel." Similar restrictions are added in Table B2-1 for PWR and BWR fuel allowed contents. The footnote (Note 3) under Table B2-2 is removed as redundant.

NAC INTERNATIONAL RESPONSE TO REQUEST FOR ADDITIONAL INFORMATION

NAC International Response to RAI TS-1 (cont'd)

Also included in the revised definitions are the grid spacer and handling limitations required to classify fuel as undamaged. These conditions were already included in Appendix B of the Technical Specifications, but were not previously included in the definitions. The response to RAI 1-1 provides clarification of the structural component intact/damaged fuel definition.

Note that the revised damaged fuel definition in Section A 1.1 includes an exception to canning missing rod assemblies (damaged fuel) for Maine Yankee site-specific fuel. Supporting evaluations for this condition are provided in Chapter 6.

NAC INTERNATIONAL RESPONSE TO REQUEST FOR ADDITIONAL INFORMATION

TECHNICAL SPECIFICATIONS (TS)

TS-2 Change Section 3.2 of Appendix B to the CoC to include dimension controls for the PWR and BWR baskets.

The basket geometry is a primary means of controlling system reactivity for a spent fuel storage cask in all phases of operation. Changes to the basket configuration can therefore impact the system reactivity (k-effective or k_{eff}). As the applicant's analysis has indicated, system reactivity increases when the fuel assemblies are shifted toward the center of the basket and, for the PWR basket, the width of the flux traps is reduced. Thus, it is important to establish a dimension control in each basket type that maintains a minimum spacing between each fuel assembly and/or a minimum flux trap size and is consistent with the dimensions of the model used in the criticality analysis. These dimension controls will clarify fundamental design requirements for future operations under this amendment.

This information is needed to confirm compliance with 10 CFR 72.124(b) and 72.236(c).

NAC International Response

Section B 3.2, "Design Features Important for Criticality Control," is revised to include minimum flux trap (structural disk web) thickness for both PWR and BWR baskets. Note that due to variations in flux trap size within the baskets, multiple values are provided. Figure B2-1 and Figure B2-2 are modified to correlate flux trap size to disk location.

Minimum flux traps presented are based on the opening location tolerances (0.015 inch on diameter) and opening width tolerances (0.015 inch) applied in the Chapter 6 evaluations. Note that minimum web thicknesses added in the Technical Specifications are based on an orthogonal shift in disk opening location, while reactivity evaluations are based on a the most reactive configuration – a radial (45 degree) shift.

NAC INTERNATIONAL RESPONSE TO REQUEST FOR ADDITIONAL INFORMATION

TECHNICAL SPECIFICATIONS (TS)

TS-3 Change the TS to clarify that the descriptions of allowable contents and configurations given in Section B 2.1.2 of Appendix B to the CoC apply only to MY fuel.

In Section B 2.1.2 of Appendix B to the proposed CoC, the applicant adds the statement that preferential loading of high burnup fuel only applies to MY fuel. It is the staff's understanding that all descriptions of allowable contents and configurations in Section B 2.1.2 are applicable only to MY fuel. For example, the information provided in Sections B 2.1 and B 2.1.1 do not indicate that preferential loading is an option, or a requirement, for non-MY fuel, high burnup or otherwise. Thus, the need for adding the proposed statement is not clear. Further, addition of the proposed statement seems to imply that other items described in Section B 2.1.2 are being, or can be, interpreted (by the applicant or cask users) as being applicable to other allowable fuel contents besides MY fuel. These items include descriptions of the loading of consolidated fuel, damaged fuel and fuel debris. The current criticality analysis only supports the loading of MY fuel in these fuel configurations; the analysis does not support the loading of other fuel assemblies in these configurations. If the applicant wants any of the descriptions of allowable contents and configurations given in Section B 2.1.2 to apply to any non-MY fuel, the applicant needs to provide the necessary analyses to support that condition.

This information is needed to confirm compliance with 10 CFR 72.236(a) and (c).

NAC International Response

NAC did not intend to apply any of the description of allowable contents and configurations given in Section B 2.1.2 to any non-MY fuel. The statement, "The requirement for loading high burnup fuel in preferential locations is applied to Maine Yankee fuel only and is not a generic NAC-UMS® fuel requirement," is therefore removed from Section B 2.1.2. As indicated by the title of the section, "B 2.1.2 Maine Yankee SITE SPECIFIC FUEL Preferential Loading," and the discussion within the section, there is no option to apply the site-specific configurations to the general fuel populations discussed in Section B 2.1.1.

NAC INTERNATIONAL RESPONSE TO REQUEST FOR ADDITIONAL INFORMATION

TECHNICAL SPECIFICATIONS (TS)

TS-4 Clarify the footnote in Table B2-1 of the proposed TS to reference the maximum decay heat for site-specific configurations controlled elsewhere in the TS.

The footnote to item "e" indicates decay heats may be higher for site-specific configurations.

This information is needed to meet the regulatory requirements of 10 CFR Part 72.11 requiring completeness and accuracy of the information.

NAC International Response

The footnote of Table B2-1 is modified to directly reference the value of the maximum site-specific heat load and the location in the Technical Specifications where it is included. The revised note reads:

"Decay heat may be higher for site-specific configurations. A site-specific maximum decay heat of 1.05 kW is specified in Section B 2.1.2."

Note that the NAC amendment request made no technical changes in the statement for which clarification is requested. There is no safety implication associated with the requested statement.

UMS Tech Specs – Appendix A

APPENDIX A

TECHNICAL SPECIFICATIONS FOR THE NAC-UMS® SYSTEM

AMENDMENT 5

Appendix A

A-1 ..... Amendment No. 5
A-2 ..... Amendment No. 5
A-3 ..... Amendment No. 5
A-4 ..... Amendment No. 4

A1-1 ..... Amendment No. 5
A1-2 ..... Amendment No. 5
A1-3 ..... Amendment No. 5
A1-4 ..... Amendment No. 5
A1-5 ..... Amendment No. 5
A1-6 ..... Amendment No. 5
A1-7 ..... Amendment No. 5
A1-8 ..... Amendment No. 5
A1-9 ..... Amendment No. 5
A1-10 ..... Amendment No. 5
A1-11 ..... Amendment No. 5
A1-12 ..... Amendment No. 5
A1-13 ..... Amendment No. 5
A1-14 ..... Amendment No. 5
A1-15 ..... Amendment No. 5
A1-16 ..... Amendment No. 5
A1-17 ..... Amendment No. 5
A1-18 ..... Amendment No. 5
A1-19 ..... Amendment No. 5

A2-1 ..... Amendment No. 4

A3-1 ..... Amendment No. 4
A3-2 ..... Amendment No. 4
A3-3 ..... Amendment No. 4
A3-4 ..... Amendment No. 4
A3-5 ..... Amendment No. 5
A3-6 ..... Amendment No. 4
A3-7 ..... Amendment No. 4
A3-8 ..... Amendment No. 4
A3-9 ..... Amendment No. 4
A3-10 ..... Amendment No. 4
A3-11 ..... Amendment No. 4
A3-12 ..... Amendment No. 5
A3-13 ..... Amendment No. 4
A3-14 ..... Amendment No. 4
A3-15 ..... Amendment No. 4
A3-16 ..... Amendment No. 4
A3-17 ..... Amendment No. 4
A3-18 ..... Amendment No. 4
A3-19 ..... Amendment No. 4
A3-20 ..... Amendment No. 4
A3-21 ..... Amendment No. 4
A3-22 ..... Amendment No. 4

A4-1 ..... Amendment No. 4

A5-1 ..... Amendment No. 4
A5-2 ..... Amendment No. 4
A5-3 ..... Amendment No. 5
A5-4 ..... Amendment No. 5
A5-5 ..... Amendment No. 4

Table of Contents

A 1.0 USE AND APPLICATION A1-1
- A 1.1 Definitions A1-1
- A 1.2 Logical Connectors A1-9
- A 1.3 Completion Times A1-12
- A 1.4 Frequency A1-17

A 2.0 [Reserved] A2-1

A 3.0 LIMITING CONDITION FOR OPERATION (LCO) APPLICABILITY A3-1
SURVEILLANCE REQUIREMENT (SR) APPLICABILITY A3-2
- A 3.1 NAC-UMS® SYSTEM Integrity A3-4
  - A 3.1.1 CANISTER Maximum Time in Vacuum Drying A3-4
  - A 3.1.2 CANISTER Vacuum Drying Pressure A3-7
  - A 3.1.3 CANISTER Helium Backfill Pressure A3-8
  - A 3.1.4 CANISTER Maximum Time in TRANSFER CASK A3-9
  - A 3.1.5 CANISTER Helium Leak Rate A3-12
  - A 3.1.6 CONCRETE CASK Heat Removal System A3-13
  - A 3.1.7 Deleted A3-15
- A 3.2 NAC-UMS® SYSTEM Radiation Protection A3-16
  - A 3.2.1 CANISTER Surface Contamination A3-16
  - A 3.2.2 CONCRETE CASK Average Surface Dose Rates A3-18
- A 3.3 NAC-UMS® SYSTEM Criticality Control A3-21
  - A 3.3.1 Dissolved Boron Concentration A3-21

Figure A3-1 CONCRETE CASK Surface Dose Rate Measurement A-3-20

A 4.0 [Reserved] A4-1

A 5.0 ADMINISTRATIVE CONTROLS AND PROGRAMS A5-1
- A 5.1 Training Program A5-1
- A 5.2 Pre-Operational Testing and Training Exercises A5-1
- A 5.3 Special Requirements for the First System Placed in Service A5-2
- A 5.4 Surveillance After an Off-Normal, Accident, or Natural Phenomena Event A5-2
- A 5.5 Radioactive Effluent Control Program A5-3

A 1.0 USE AND APPLICATION

A 1.1 Definitions

----------NOTE----------

The defined terms of this section appear in capitalized type and are applicable throughout this section.

Term	Definition
ACTIONS	ACTIONS shall be that part of a Specification that prescribes Required Actions to be taken under designated Conditions within specified Completion Times.
ASSEMBLY DEFECT	Any change in the physical as-built condition of the assembly, with the exception of normal in-reactor changes such as elongation from irradiation growth or assembly bow. Example of assembly defects include: (a) missing rods, (b) broken or missing grids or grid straps (spacer), and (c) missing or broken grid springs, etc. An assembly with a defect is damaged only if it cannot meet its fuel-specific and system-related functions.
BREACHED SPENT FUEL ROD	Spent fuel with cladding defects that permit the release of gas from the interior of the fuel rod. A fuel rod breach may be a minor defect (i.e., hairline crack or pinhole), allowing the rod to be classified as undamaged, or be a gross breach requiring a damaged fuel classification.
BURNUP	Assembly Average Burnup: Value calculated by averaging the burnup over the entire fuel region (UO_2) of an individual fuel assembly. Peak Average Rod Burnup: Value calculated by averaging the burnup in a rod over the length of the rod, then using the highest burnup calculated for any rod as the peak average rod burnup.
CANISTER	See TRANSPORTABLE STORAGE CANISTER

(continued)

CANISTER HANDLING FACILITY	The CANISTER HANDLING FACILITY includes the following components and equipment: (1) a canister transfer station that allows the staging of the TRANSFER CASK with the CONCRETE CASK or transport cask to facilitate CANISTER lifts involving spent fuel handling not covered by 10 CFR 50; and (2) either a stationary lift device or mobile lifting device used to lift the TRANSFER CASK and CANISTER.
CONCRETE CASK	See VERTICAL CONCRETE CASK
CONSOLIDATED FUEL	A nonstandard fuel configuration in which the individual fuel rods from one or more fuel assemblies are placed in a single container or a lattice structure that is similar to a fuel assembly. CONSOLIDATED FUEL is stored in a MAINE YANKEE FUEL CAN.
DAMAGED FUEL	Spent nuclear fuel (SNF) that cannot fulfill its fuel-specific or system-related function. DAMAGED FUEL must be placed in a MAINE YANKEE FUEL CAN unless otherwise noted. Spent fuel is classified as damaged under the following conditions. 1. There is visible deformation of the rods in the SNF assembly. Note: This is not referring to the uniform bowing that occurs in the reactor; this refers to bowing that significantly opens up the lattice spacing. 2. Individual fuel rods are missing from the assembly and the missing rods are not replaced by dummy rods that displace a volume equal to, or greater than, the original fuel rods. Note: Maine Yankee fuel assemblies with missing fuel rods, not replaced by filler rods, do not require placement into a MAINE YANKEE FUEL CAN, but must be preferentially loaded. 3. The SNF assembly has missing, displaced or damaged structural components such that either:

(continued)

DAMAGED FUEL (cont'd)

- Radiological and/or criticality safety is adversely affected (e.g., significantly changed rod pitch); or
- The assembly cannot be handled by normal means (i.e., crane and grapple).

Note: PWR assemblies with the following structural defects meet UMS system-related functional requirements and are, therefore, classified as undamaged.

- Grid, grid strap, and/or grid strap spring damage in PWR assemblies such that the unsupported length of the fuel rod does not exceed 60 inches.

4. Reactor operating records (or other records) indicate that the SNF assembly contains fuel rods with gross breaches.

   Note: Breached fuel rods with minor cladding defects (i.e, pinhole leaks or hairline cracks that will not permit significant release of particulate matter from the spent fuel rod) meet UMS system-related functional requirements and are, therefore, classified as undamaged.

5. The SNF assembly is no longer in the form of an intact fuel bundle (e.g., consists of or contains debris such as loose fuel pellets or rod segments).

FUEL DEBRIS

An intact or a partial fuel rod or an individual intact or partial fuel pellet not contained in a fuel rod. Fuel debris is inserted into a 9 × 9 array of tubes in a lattice that has approximately the same dimensions as a standard fuel assembly. FUEL DEBRIS is stored in a MAINE YANKEE FUEL CAN.

(continued)

GROSSLY BREACHED SPENT FUEL ROD	A breach in the spent fuel cladding that is larger than a pinhole or hairline crack. A gross cladding breach may be established by visual examination with the capability to determine if the fuel pellet can be seen through the cladding, or through a review of reactor operating records indicating the presence of heavy metal isotopes.
HIGH BURNUP FUEL	A fuel assembly meeting the definition of a standard fuel assembly with an assembly average burnup between 45,000 and 60,000 MWd/MTU. Maximum peak average rod burnup is limited to 62,500 MWd/MTU.
INDEPENDENT SPENT FUEL STORAGE INSTALLATION (ISFSI)	The facility within the perimeter fence licensed for storage of spent fuel within NAC-UMS® SYSTEMs (see also 10 CFR 72.3).
INITIAL PEAK PLANAR-AVERAGE ENRICHMENT	THE INITIAL PEAK PLANAR-AVERAGE ENRICHMENT is the maximum planar-average enrichment at any height along the axis of the fuel assembly. The 4.7 wt % ^{235}U enrichment limit for BWR fuel applies along the full axial extent of the assembly. The INITIAL PEAK PLANAR-AVERAGE ENRICHMENT may be higher than the bundle (assembly) average enrichment.
INTACT FUEL (ASSEMBLY OR ROD)	Any fuel that can fulfill all fuel-specific and system-related functions and that is not breached.
LOADING OPERATIONS	LOADING OPERATIONS include all licensed activities on a NAC-UMS® SYSTEM while it is being loaded with fuel assemblies. LOADING OPERATIONS begin when the first fuel assembly is placed in the CANISTER and end when the NAC-UMS® SYSTEM is secured on the transporter. LOADING OPERATIONS does not include post-storage operations, i.e., CANISTER transfer operations between the TRANSFER CASK and the CONCRETE CASK or transport cask after STORAGE OPERATIONS.

(continued)

MAINE YANKEE FUEL CAN	A specially designed stainless steel screened can sized to hold INTACT FUEL, CONSOLIDATED FUEL, DAMAGED FUEL or FUEL DEBRIS. The screens preclude the release of gross particulate from the can into the canister cavity. The MAINE YANKEE FUEL CAN may only be loaded in a Class 1 canister.
NAC-UMS® SYSTEM	NAC-UMS® SYSTEM includes the components approved for loading and storage of spent fuel assemblies at the ISFSI. The NAC-UMS® SYSTEM consists of a CONCRETE CASK, a TRANSFER CASK, and a CANISTER.
OPERABLE	The CONCRETE CASK heat removal system is OPERABLE if: 1. System validation is performed by taking temperature measurements on a one time per canister basis, between 5 and 30 days following placement of the CONCRETE CASK on the ISFSI pad. The difference between the ISFSI ambient temperature and the average outlet air temperature shall be ≤102°F for the PWR CANISTER, or ≤92°F for the BWR CANISTER, for each canister loaded. 2. Once validated using temperature difference measurements, system surveillance monitoring may be performed by temperature measurements or visual inspection of inlet and outlet screens to verify that they are not obstructed.

(continued)

SITE SPECIFIC FUEL	Spent fuel configurations that are unique to a site or reactor due to the addition of other components or reconfiguration of the fuel assembly at the site. It includes fuel assemblies, which hold nonfuel-bearing components, such as a control element assembly, a burnable poison rod insert, a solid stainless steel rod insert, an in-core instrument thimble or a flow mixer, or which are modified as required by expediency in reactor operations, research and development or testing. Modification may consist of individual fuel rod removal, fuel rod replacement of similar or dissimilar material or enrichment, the installation, removal or replacement of burnable poison rods or solid stainless steel rods, or containerizing damaged fuel. Site specific fuel includes irradiated fuel assemblies designed with variable enrichments and/or axial blankets, fuel that is consolidated and fuel that exceeds design basis fuel parameters.
STANDARD FUEL	Irradiated fuel assemblies having the same configuration as when originally fabricated consisting generally of the end fittings, fuel rods, guide tubes, and integral hardware. For PWR fuel, a flow mixer, an in-core instrument thimble or a burnable poison rod insert is considered to be a component of standard fuel. For BWR fuel, the channel is considered to be integral hardware. The design basis fuel characteristics and analysis are based on the STANDARD FUEL configuration.
STORAGE OPERATIONS	STORAGE OPERATIONS include all licensed activities that are performed at the ISFSI, while an NAC-UMS® SYSTEM containing spent fuel is located on the storage pad within the ISFSI perimeter.
TRANSFER CASK	TRANSFER CASK is a shielded lifting device that holds the CANISTER during LOADING and UNLOADING OPERATIONS and during closure welding, vacuum drying, leak testing, and non-destructive examination of the CANISTER closure welds. The TRANSFER CASK is also used to transfer the CANISTER into and from the CONCRETE CASK and into the transport cask. TRANSFER CASK refers to either the standard or advanced transfer cask.

(continued)

TRANSFER OPERATIONS	TRANSFER OPERATIONS include all licensed activities involved in transferring a loaded CANISTER from a CONCRETE CASK to another CONCRETE CASK or to a TRANSPORT CASK.
TRANSPORT OPERATIONS	TRANSPORT OPERATIONS include all licensed activities involved in moving a loaded NAC-UMS® CONCRETE CASK and CANISTER to and from the ISFSI. TRANSPORT OPERATIONS begin when the NAC-UMS® SYSTEM is first secured on the transporter and end when the NAC-UMS® SYSTEM is at its destination and no longer secured on the transporter.
TRANSPORTABLE STORAGE CANISTER (CANISTER)	TRANSPORTABLE STORAGE CANISTER is the sealed container that consists of a tube and disk fuel basket in a cylindrical canister shell that is welded to a baseplate, shield lid with welded port covers, and structural lid. The CANISTER provides the confinement boundary for the confined spent fuel.
UNDAMAGED FUEL	Spent nuclear fuel that can meet all fuel specific and system-related functions. UNDAMAGED FUEL is spent nuclear fuel that is not DAMAGED FUEL, as defined herein, and does not contain assembly structural defects that adversely affect radiological and/or criticality safety. As such, UNDAMAGED FUEL may contain: a) Breached spent fuel rods (i.e, rods with minor defects up to hairline cracks or pinholes) but can not contain grossly breached fuel rods; b) Grid, grid strap, and/or grid spring damage in PWR assemblies, provided that the unsupported length of the fuel rod does not exceed 60 inches.

(continued)

UNLOADING OPERATIONS	UNLOADING OPERATIONS include all licensed activities on a NAC-UMS® SYSTEM to be unloaded of the contained fuel assemblies. UNLOADING OPERATIONS begin when the NAC-UMS® SYSTEM is no longer secured on the transporter and end when the last fuel assembly is removed from the NAC-UMS® SYSTEM.
VERTICAL CONCRETE CASK (CONCRETE CASK)	VERTICAL CONCRETE CASK is the cask that receives and holds the sealed CANISTER. It provides the gamma and neutron shielding and convective cooling of the spent fuel confined in the CANISTER.

A 1.0 USE AND APPLICATION

A 1.2 Logical Connectors

PURPOSE

The purpose of this section is to explain the meaning of logical connectors.

Logical connectors are used in Technical Specifications (TS) to discriminate between, and yet connect, discrete Conditions, Required Actions, Completion Times, Surveillances, and Frequencies. The only logical connectors that appear in Technical Specifications are "AND" and "OR." The physical arrangement of these connectors constitutes logical conventions with specific meanings.

BACKGROUND

Several levels of logic may be used to state Required Actions. These levels are identified by the placement (or nesting) of the logical connectors and by the number assigned to each Required Action. The first level of logic is identified by the first digit of the number assigned to a Required Action and the placement of the logical connector in the first level of nesting (i.e., left justified with the number of the Required Action). The successive levels of logic are identified by additional digits of the Required Action number and by successive indentations of the logical connectors.

When logical connectors are used to state a Condition, Completion Time, Surveillance, or Frequency, only the first level of logic is used; the logical connector is left justified with the statement of the Condition, Completion Time, Surveillance, or Frequency.

(continued)

EXAMPLES The following examples illustrate the use of logical connectors.

EXAMPLES EXAMPLE 1.2-1
ACTIONS

CONDITION	REQUIRED ACTION	COMPLETION TIME
A. LCO not met	A.1 Verify. . . AND A.2 Restore. . .	

In this example, the logical connector "AND" is used to indicate that when in Condition A, both Required Actions A.1 and A.2 must be completed.

(continued)

EXAMPLES (continued)

EXAMPLE 1.2-2

ACTIONS

CONDITION	REQUIRED ACTION		COMPLETION TIME
A. LCO not met	A.1	Stop. . .	
	OR		
	A.2.1	Verify. . .	
	AND		
	A.2.2		
	A.2.2.1	Reduce. . .	
		OR	
	A.2.2.2	Perform. . .	
	OR		
	A.3	Remove. . .	

This example represents a more complicated use of logical connectors. Required Actions A.1, A.2, and A.3 are alternative choices, only one of which must be performed as indicated by the use of the logical connector "OR" and the left justified placement. Any one of these three Actions may be chosen. If A.2 is chosen, then both A.2.1 and A.2.2 must be performed as indicated by the logical connector "AND." Required Action A.2.2 is met by performing A.2.2.1 or A.2.2.2. The indented position of the logical connector "OR" indicated that A.2.2.1 and A.2.2.2 are alternative choices, only one of which must be performed.

A 1.0 USE AND APPLICATION

A 1.3 Completion Times

PURPOSE	The purpose of this section is to establish the Completion Time convention and to provide guidance for its use.
BACKGROUND	Limiting Conditions for Operations (LCOs) specify the lowest functional capability or performance levels of equipment required for safe operation of the NAC-UMS® SYSTEM. The ACTIONS associated with an LCO state conditions that typically describe the ways in which the requirements of the LCO can fail to be met. Specified with each stated Condition are Required Action(s) and Completion Time(s).
DESCRIPTION	The Completion Time is the amount of time allowed for completing a Required Action. It is referenced to the time of discovery of a situation (e.g., equipment or variable not within limits) that requires entering an ACTIONS Condition, unless otherwise specified, provided that the NAC-UMS® SYSTEM is in a specified Condition stated in the Applicability of the LCO. Prior to the expiration of the specified Completion Time, Required Actions must be completed. An ACTIONS Condition remains in effect and the Required Actions apply until the Condition no longer exists or the NAC-UMS® SYSTEM is not within the LCO Applicability. Once a Condition has been entered, subsequent subsystems, components, or variables expressed in the Condition, discovered to be not within limits, will <u>not</u> result in separate entry into the Condition, unless specifically stated. The Required Actions of the Condition continue to apply to each additional failure, with Completion Times based on initial entry into the Condition.

(continued)

EXAMPLES

The following examples illustrate the use of Completion Times with different types of Conditions and changing Conditions.

EXAMPLE 1.3-1

ACTIONS

CONDITION	REQUIRED ACTION		COMPLETION TIME
B. Required Action and associated Completion Time not met	B.1	Perform Action B.1	12 hours
	AND		
	B.2	Perform Action B.2	36 hours

Condition B has two Required Actions. Each Required Action has its own Completion Time. Each Completion Time is referenced to the time that Condition B is entered.

The Required Actions of Condition B are to complete action B.1 within 12 hours AND complete action B.2 within 36 hours. A total of 12 hours is allowed for completing action B.1 and a total of 36 hours (not 48 hours) is allowed for completing action B.2 from the time that Condition B was entered. If action B.1 is completed within six hours, the time allowed for completing action B.2 is the next 30 hours because the total time allowed for completing action B.2 is 36 hours.

(continued)

EXAMPLES (continued)

EXAMPLE 1.3-2

ACTIONS

CONDITION	REQUIRED ACTION	COMPLETION TIME
A. One System not within limit	A.1 Restore System to within limit	7 days
B. Required Action and associated Completion Time not met	B.1 Complete action B.1 AND B.2 Complete action B.2	12 hours 36 hours

When a System is determined not to meet the LCO, Condition A is entered. If the System is not restored within seven days, Condition B is also entered, and the Completion Time clocks for Required Actions B.1 and B.2 start. If the System is restored after Condition B is entered, Conditions A and B are exited; therefore, the Required Actions of Condition B may be terminated.

(continued)

EXAMPLES (continued)

EXAMPLE 1.3-3

ACTIONS

----------NOTE----------

Separate Condition entry is allowed for each component.

CONDITION	REQUIRED ACTION		COMPLETION TIME
A. LCO not met	A.1	Restore compliance with LCO	4 hours
B. Required Action and associated Completion Time not met	B.1	Complete action B.1	6 hours
	AND		
	B.2	Complete action B.2	12 hours

The Note above the ACTIONS table is a method of modifying how the Completion Time is tracked. If this method of modifying how the Completion Time is tracked was applicable only to a specific Condition, the Note would appear in that Condition rather than at the top of the ACTIONS Table.

The Note allows Condition A to be entered separately for each component, and Completion Times to be tracked on a per component basis. When a component is determined to not meet the LCO, Condition A is entered and its Completion Time starts. If subsequent components are determined to not meet the LCO, Condition A is entered for each component and separate Completion Times are tracked for each component.

(continued)

EXAMPLES (continued)	EXAMPLE 1.3-3
IMMEDIATE COMPLETION TIME	When "Immediately" is used as a Completion Time, the Required Action should be pursued without delay and in a controlled manner.

A 1.0 USE AND APPLICATION

A 1.4 Frequency

PURPOSE

The purpose of this section is to define the proper use and application of Frequency requirements.

DESCRIPTION

Each Surveillance Requirement (SR) has a specified Frequency in which the Surveillance must be met in order to meet the associated Limiting Condition for Operation (LCO). An understanding of the correct application of the specified Frequency is necessary for compliance with the SR.

Each "specified Frequency" is referred to throughout this section and each of the Specifications of Section 3.0, Surveillance Requirement (SR) Applicability. The "specified Frequency" consists of requirements of the Frequency column of each SR.

Situations where a Surveillance could be required (i.e., its Frequency could expire), but where it is not possible or not desired that it be performed until sometime after the associated LCO is within its Applicability, represent potential SR 3.0.4 conflicts. To avoid these conflicts, the SR (i.e., the Surveillance or the Frequency) is stated such that it is only "required" when it can be and should be performed. With an SR satisfied, SR 3.0.4 imposes no restriction.

The use of "met" or "performed" in these instances conveys specific meanings. A Surveillance is "met" only after the acceptance criteria are satisfied. Known failure of the requirements of a Surveillance, even without a Surveillance specifically being "performed," constitutes a Surveillance not "met."

(continued)

EXAMPLES The following examples illustrate the various ways that Frequencies are specified.

EXAMPLE 1.4-1

SURVEILLANCE REQUIREMENTS

SURVEILLANCE	FREQUENCY
Verify pressure within limit	12 hours

Example 1.4-1 contains the type of SR most often encountered in the Technical Specifications (TS). The Frequency specifies an interval (12 hours) during which the associated Surveillance must be performed at least one time. Performance of the Surveillance initiates the subsequent interval. Although the Frequency is stated as 12 hours, SR 3.0.2 allows an extension of the time interval to 1.25 times the interval specified in the Frequency for operational flexibility. The measurement of this interval continues at all times, even when the SR is not required to be met per SR 3.0.1 (such as when the equipment or variables are outside specified limits, or the facility is outside the Applicability of the LCO). If the interval specified by SR 3.0.2 is exceeded while the facility is in a condition specified in the Applicability of the LCO, the LCO is not met in accordance with SR 3.0.1.

If the interval as specified by SR 3.0.2 is exceeded while the facility is not in a condition specified in the Applicability of the LCO for which performance of the SR is required, the Surveillance must be performed within the Frequency requirements of SR 3.0.2, prior to entry into the specified condition. Failure to do so would result in a violation of SR 3.0.4.

(continued)

EXAMPLE 1.4-2

SURVEILLANCE REQUIREMENTS

SURVEILLANCE	FREQUENCY
Verify flow is within limits	Once within 12 hours prior to starting activity AND 24 hours thereafter

Example 1.4-2 has two Frequencies. The first is a one time performance Frequency, and the second is of the type shown in Example 1.4-1. The logical connector "AND" indicates that both Frequency requirements must be met. Each time the example activity is to be performed, the Surveillance must be performed within 12 hours prior to starting the activity.

The use of "once" indicates a single performance will satisfy the specified Frequency (assuming no other Frequencies are connected by "AND"). This type of Frequency does not qualify for the 25% extension allowed by SR 3.0.2.

"Thereafter" indicates future performances must be established per SR 3.0.2, but only after a specified condition is first met (i.e., the "once" performance in this example). If the specified activity is canceled or not performed, the measurement of both intervals stops. New intervals start upon preparing to restart the specified activity.

2. The time duration from the end of 24 hours of in-pool cooling or of forced air cooling of the CANISTER through completion of vacuum dryness testing and the completion of LCO A 3.1.3 shall not exceed the following limits:

PWR Forced Air		PWR In-Pool	
Total Heat Load (L) (kW)	Time Limit (Hours)	Total Heat Load (L) (kW)	Time Limit (Hours)
$20 < L \leq 23$	3	$20 < L \leq 23$	12
$17.6 < L \leq 20$	6	$17.6 < L \leq 20$	15
$14 < L \leq 17.6$	9	$14 < L \leq 17.6$	18
$11 < L \leq 14$	16	$11 < L \leq 14$	24
$8 < L \leq 11$	27	$8 < L \leq 11$	36
$L \leq 8$	78	$L \leq 8$	87

BWR Forced Air		BWR In-Pool	
Total Heat Load (L) (kW)	Time Limit (Hours)	Total Heat Load (L) (kW)	Time Limit (Hours)
$20 < L \leq 23$	2	$20 < L \leq 23$	10
$17 < L \leq 20$	3	$17 < L \leq 20$	11
$14 < L \leq 17$	8	$14 < L \leq 17$	17
$11 < L \leq 14$	18	$11 < L \leq 14$	26
$L \leq 11$	41	$L \leq 11$	52

Note: A CANISTER loaded with a fuel assembly having a burnup >45 GWd/MTU is limited to a total of nine (9) cooling/vacuum drying cycles performed in accordance with LCO 3.1.1.2.

APPLICABILITY: During LOADING OPERATIONS

(continued)

A 3.1 NAC-UMS® SYSTEM Integrity

A 3.1.5 CANISTER Helium Leak Rate

LCO 3.1.5 There shall be no indication of a helium leak at a test sensitivity of 1×10^{-7} cm^3/sec (helium) through the CANISTER shield lid to CANISTER shell confinement weld to demonstrate a helium leak rate equal to or less than 2×10^{-7} cm^3/sec (helium).

APPLICABILITY: During LOADING OPERATIONS

ACTIONS

----------NOTE----------
Separate Condition entry is allowed for each NAC-UMS® SYSTEM.

CONDITION	REQUIRED ACTION	COMPLETION TIME
A. CANISTER helium leak rate limit not met	A.1 Establish CANISTER helium leak rate within limit	25 days
B. Required Action and associated Completion Time not met	B.1 Remove all fuel assemblies from the NAC-UMS® SYSTEM	5 days

SURVEILLANCE REQUIREMENTS

SURVEILLANCE		FREQUENCY
SR 3.1.5.1	Verify CANISTER helium leak rate is within limit	Once prior to TRANSPORT OPERATIONS.

UMS Tech Specs – Appendix B

APPENDIX B

APPROVED CONTENTS AND DESIGN FEATURES FOR THE NAC-UMS® SYSTEM

AMENDMENT 5

Appendix B

B-1 ..... Amendment No. 5
B-2 ..... Amendment No. 5
B-3 ..... Amendment No. 5

B1-1 ..... Amendment No. 4

B2-1 ..... Amendment No. 5
B2-2 ..... Amendment No. 5
B2-3 ..... Amendment No. 4
B2-4 ..... Amendment No. 5
B2-5 ..... Amendment No. 5
B2-6 ..... Amendment No. 5
B2-7 ..... Amendment No. 5
B2-8 ..... Amendment No. 5
B2-9 ..... Amendment No. 5
B2-10 ..... Amendment No. 5
B2-11 ..... Amendment No. 5
B2-12 ..... Amendment No. 5
B2-13 ..... Amendment No. 5
B2-14 ..... Amendment No. 5
B2-15 ..... Amendment No. 5
B2-16 ..... Amendment No. 5
B2-17 ..... Amendment No. 5
B2-18 ..... Amendment No. 5
B2-19 ..... Amendment No. 5
B2-20 ..... Amendment No. 5

B3-1 ..... Amendment No. 5
B3-2 ..... Amendment No. 5
B3-3 ..... Amendment No. 5
B3-4 ..... Amendment No. 4
B3-5 ..... Amendment No. 5
B3-6 ..... Amendment No. 4
B3-7 ..... Amendment No. 4
B3-8 ..... Amendment No. 4
B3-9 ..... Amendment No. 4
B3-10 ..... Amendment No. 4
B3-11 ..... Amendment No. 4
B3-12 ..... Amendment No. 4
B3-13 ..... Amendment No. 4

Appendix B
Table of Contents

B 1.0 [Reserved] B1-1

B 2.0 Approved Contents B2-1
B 2.1 Fuel Specifications and Loading Conditions B2-1

Figure B2-1 PWR Basket Fuel Loading and Flux Trap Positions B2-4
Figure B2-2 BWR Basket Fuel Loading and Flux Trap Positions B2-5
Table B2-1 Fuel Assembly Limits B2-6
Table B2-2 PWR Fuel Assembly Characteristics B2-9
Table B2-3 BWR Fuel Assembly Characteristics B2-10
Table B2-4 Minimum Cooling Time Versus Burnup/Initial Enrichment for PWR Fuel B2-11
Table B2-5 Minimum Cooling Time Versus Burnup/Initial Enrichment for BWR Fuel B2-13
Table B2-6 Maine Yankee Site Specific Fuel Canister Loading Position Summary B2-14
Table B2-7 Maine Yankee Site Specific Fuel Limits B2-15
Table B2-8 Loading Table for Maine Yankee CE 14 × 14 Fuel with No Non-Fuel Material – Required Cool Time in Years Before Assembly is Acceptable B2-18
Table B2-9 Loading Table for Maine Yankee CE 14 × 14 Fuel Containing CEA Cooled to Indicated Time B2-20

B 3.0 Design Features B3-1
B 3.1 Site B3-1
B 3.2 Design Features Important for Criticality Control B3-1
B 3.3 Codes and Standards B3-2
B 3.4 Site Specific Parameters and Analyses B3-7
B 3.5 CANISTER HANDLING FACILITY (CHF) B3-11

Table B3-1 List of ASME Code Exceptions for the NAC-UMS® SYSTEM B3-3
Table B3-2 Load Combinations and Service Condition Definitions for the CANISTER HANDLING FACILITY (CHF) Structure B3-13

B 2.1.1 Fuel to be Stored in the NAC-UMS® SYSTEM

INTACT FUEL ASSEMBLIES meeting the limits specified in Tables B2-1 through B2-5 may be stored in the NAC-UMS® SYSTEM.

B 2.1.2 Maine Yankee SITE SPECIFIC FUEL Preferential Loading

The estimated Maine Yankee SITE SPECIFIC FUEL inventory is shown in Table B2-6. As shown in this table, certain of the Maine Yankee fuel configurations must be preferentially loaded in specific basket fuel tube positions.

Corner positions are used for CONSOLIDATED FUEL, certain HIGH BURNUP FUEL and DAMAGED FUEL or FUEL DEBRIS loaded in a MAINE YANKEE FUEL CAN, for fuel assemblies with missing fuel rods, burnable poison rods or fuel assemblies with fuel rods that have been replaced by hollow zirconium alloy rods. Designation for placement in corner positions results primarily from shielding or criticality evaluations of these fuel configurations. CONSOLIDATED FUEL is conservatively designated for a corner position, even though analysis shows that these lattices could be loaded in any basket position. Corner positions are positions 3, 6, 19, and 22 in Figure B2-1.

Preferential loading is also used for HIGH BURNUP fuel not loaded in the MAINE YANKEE FUEL CAN. This fuel is assigned to peripheral locations, positions 1, 2, 3, 6, 7, 12, 13, 18, 19, 22, 23, and 24 in Figure B2-1. The interior locations, positions 4, 5, 8, 9, 10, 11, 14, 15, 16, 17, 20, and 21, must be loaded with fuel that has lower burnup and/or longer cool times to maintain the design basis heat load (23 kW per canister).

One of the two loading patterns (Standard or Preferential) shown in Table B2-8 must be used to load each canister. For the Standard loading pattern, the heat load of each fuel assembly is limited to 0.958 kW. For the Preferential loading pattern, the heat load of the fuel assemblies at the basket periphery locations is limited to 1.05 kW, and the heat load of the fuel assemblies at the basket interior locations is limited to 0.867 kW. Once selected, all of the spent fuel in that canister must be loaded in accordance with that pattern. Within a pattern, mixing of enrichment and cool time is allowed, but no mixing of loading patterns is permitted. Choosing a Preferential pattern restricts the interior fuel to the cool times shown in the Preferential (I) column, and the peripheral fuel to the cool times shown in the Preferential (P) column.

(continued)

Figure B2-1 PWR Basket Fuel Loading and Flux Trap Positions

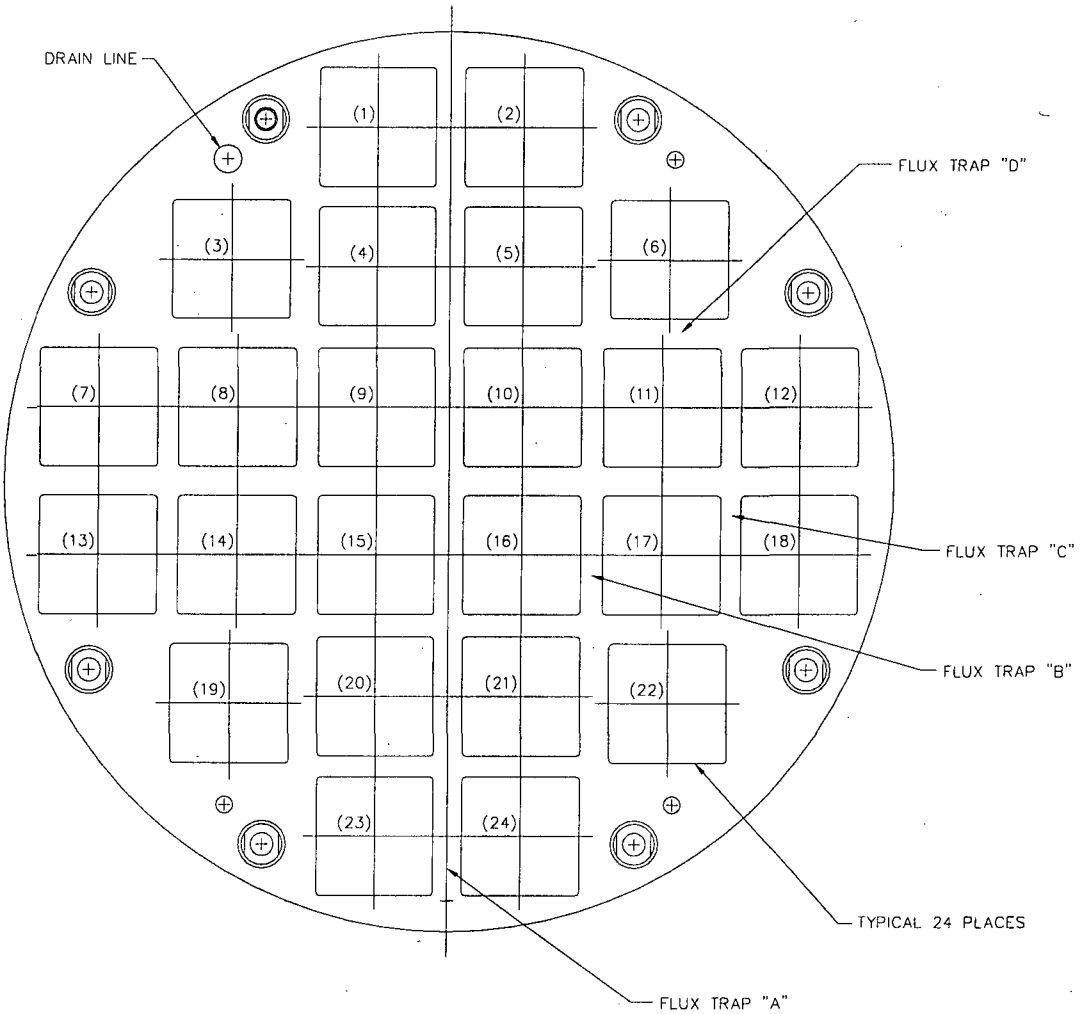

Note: Basket flux traps are applied in 1/8 symmetry pattern.

Figure B2-2 BWR Basket Fuel Loading and Flux Trap Positions

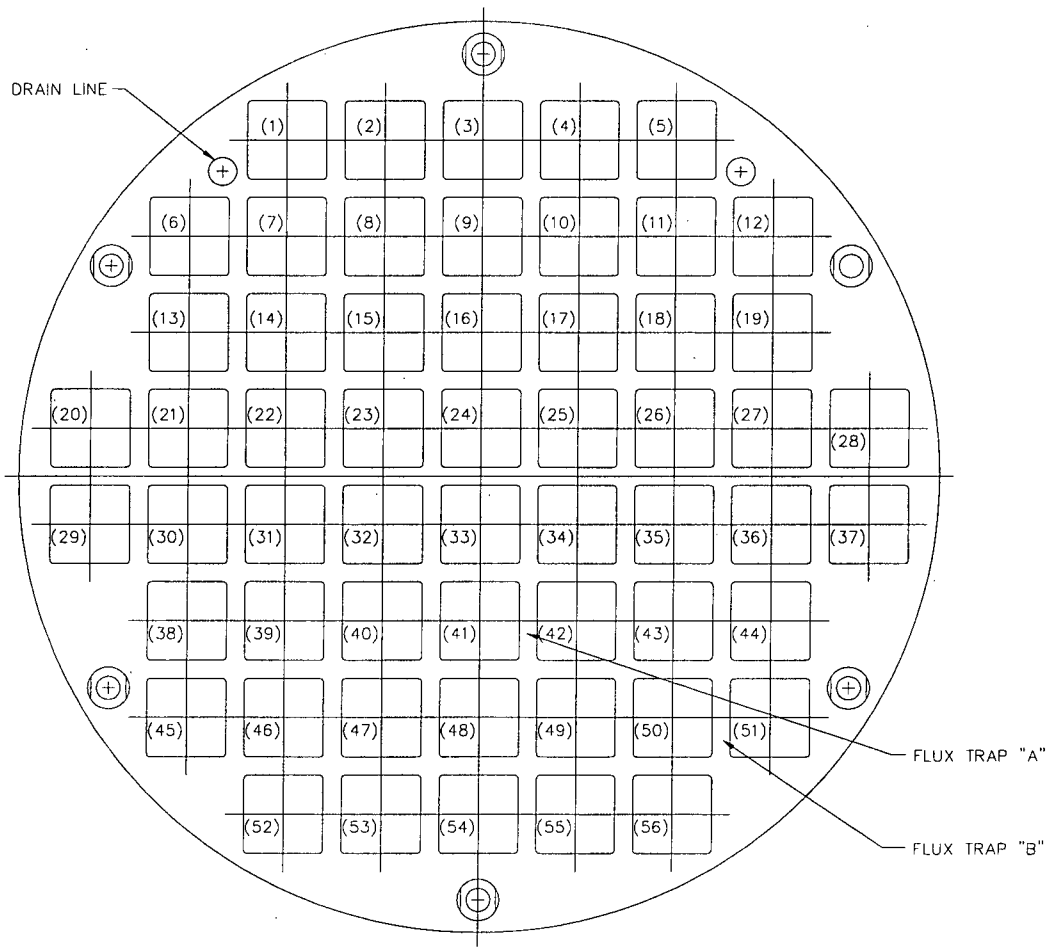

Note: Flux trap "B" design applies only to loading positions 6, 12, 45, and 51. All remaining flux traps are type "A."

Table B2-1
Fuel Assembly Limits

I. NAC-UMS® CANISTER: PWR FUEL

A. Allowable Contents

1. Uranium oxide PWR INTACT FUEL ASSEMBLIES listed in Table B2-2 and meeting the following specifications:

a. Cladding Type:	Zirconium alloy with thickness as specified in Table B2-2 for the applicable fuel assembly class.
b. Enrichment, Post-irradiation Cooling Time and Average Burnup Per Assembly:	Maximum enrichment limits are shown in Table B2-2. For variable enrichment fuel assemblies, maximum enrichments represent peak rod enrichments. Combined minimum enrichment, maximum burnup and minimum cool time limits are shown in Table B2-4.
c. Assembly Average Burnup:	Value calculated by averaging the burnup over the entire fuel region (UO_2) of an individual fuel assembly. The maximum assembly average burnup is 60,000 MWd/MTU.
d. Peak Average Rod Burnup:	Value calculated by averaging the burnup in a rod over the length of the rod, then using the highest burnup calculated for any rod as the peak average rod burnup. The maximum peak average rod burnup is 62,500 MWd/MTU.
e. Decay Heat Per Assembly:	≤ 958.3 watts [+]
f. Nominal Fresh Fuel Assembly Length (in.):	≤ 178.3
g. Nominal Fresh Fuel Assembly Width (in.):	≤ 8.54
h. Fuel Assembly Weight (lbs.):	≤ 1,602 [‡]

[+] Decay heat may be higher for site-specific configurations. A site-specific maximum decay heat of 1.05 kW is specified in Section B 2.1.2.

[‡] Includes the weight of nonfuel-bearing components.

B. Quantity per CANISTER: Up to 24 PWR INTACT FUEL ASSEMBLIES.

C. PWR INTACT FUEL ASSEMBLIES may contain a flow mixer (thimble plug), an in-core instrument thimble, a burnable poison rod insert (Class 1 and Class 2 contents) consistent with Table B2-2, or solid stainless steel rods (inserted in the guide tubes).

D. PWR INTACT FUEL ASSEMBLIES shall not contain a control element assembly, except as permitted for SITE-SPECIFIC FUEL.

E. Stainless steel spacers may be used in CANISTERS to axially position PWR INTACT FUEL ASSEMBLIES that are shorter than the available cavity length to facilitate handling.

Table B2-1
Fuel Assembly Limits (continued)

F. Unenriched fuel assemblies are not authorized for loading.

G. The minimum length of the PWR INTACT FUEL ASSEMBLY internal structure and bottom end fitting and/or spacers shall ensure that the minimum distance to the fuel region from the base of the CANISTER is 3.2 inches.

H. PWR UNDAMAGED FUEL ASSEMBLIES with one or more grid spacers missing or damaged such that the unsupported length of the fuel rods does not exceed 60 inches. End fitting damage including damaged or missing hold-down springs is allowed, as long as the assembly can be handled safely by normal means.

I. PWR UNDAMAGED FUEL ASSEMBLIES not containing the nominal number of fuel rods specified in Table B2-2 must contain solid filler rods that displace a volume equal to, or greater than, that of the fuel rod that the filler rod replaces. SITE-SPECIFIC FUEL may contain missing fuel rods or hollow rods without replacement by solid filler rods provided the loading restrictions listed in Table B2-7 are met.

II. NAC-UMS® CANISTER: BWR FUEL

A. Allowable Contents

1. Uranium oxide BWR INTACT FUEL ASSEMBLIES listed in Table B2-3 and meeting the following specifications:

a. Cladding Type:	Zirconium alloy with thickness as specified in Table B2-3 for the applicable fuel assembly class.
b. Enrichment:	Maximum INITIAL PEAK PLANAR-AVERAGE ENRICHMENTS are shown in Table B2-3. Combined minimum enrichment, maximum burnup and minimum cool time limits are shown in Table B2-5.
c. Decay Heat per Assembly:	≤ 410.7 watts
d. Post-irradiation Cooling Time and Average Burnup Per Assembly:	As specified in Table B2-5 and for the applicable fuel assembly class.
e. Nominal Fresh Fuel Design Assembly Length (in.):	≤ 176.1
f. Nominal Fresh Fuel Design Assembly Width (in.):	≤ 5.51
g. Fuel Assembly Weight (lbs):	≤ 702, including channels

Table B2-1
Fuel Assembly Limits (continued)

B. Quantity per CANISTER: Up to 56 BWR INTACT FUEL ASSEMBLIES
C. BWR INTACT FUEL ASSEMBLIES can be unchanneled or channeled with zirconium alloy channels.
D. BWR INTACT FUEL ASSEMBLIES with stainless steel channels shall not be loaded.
E. Stainless steel fuel spacers may be used in CANISTERS to axially position BWR INTACT FUEL ASSEMBLIES that are shorter than the available cavity length to facilitate handling.
F. Unenriched fuel assemblies are not authorized for loading.
G. The minimum length of the BWR INTACT FUEL ASSEMBLY internal structure and bottom end fitting and/or spacers shall ensure that the minimum distance to the fuel region from the base of the CANISTER is 6.2 inches.
H. BWR INTACT FUEL ASSEMBLIES not containing the nominal number of fuel rods specified in Table B2-3 must contain solid filler rods that displace a volume equal to, or greater than, that of the fuel rod that the filler rod replaces.

Table B2-2 PWR Fuel Assembly Characteristics

Fuel Class	Vendor[1]	Array	Max. MTU	W/O Boron Max. wt % ^{235}U[3]	With Boron Max. wt % ^{235}U[4]	No. of Fuel Rods	No. of Water Holes	Max. Pitch (in)	Min. Rod Dia. (in)	Min. Clad Thick (in)	Max. Pellet Dia.(in)	Max. Active Length (in)	Min. Guide Tube Thick (in)
1	CE	14×14	0.404	4.7	5.0	176	5	0.590	0.438	0.024	0.380	137.0	0.034
1	Ex/ANF	14×14	0.369	5.0	5.0	179	17	0.556	0.424	0.030	0.351	142.0	0.034
1	WE	14×14	0.362	5.0	5.0	179	17	0.556	0.400	0.024	0.345	144.0	0.034
1	WE	14×14	0.415	5.0	5.0	179	17	0.556	0.422	0.022	0.368	145.2	0.034
1	WE, Ex/ANF	15×15	0.465	4.4	5.0	204	21	0.563	0.422	0.024	0.366	144.0	0.015
1	Ex/ANF	17×17	0.413	4.4	5.0	264	25	0.496	0.360	0.025	0.303	144.0	0.016
1	WE	17×17	0.468	4.5	5.0	264	25	0.496	0.374	0.022	0.323	144.0	0.015
1	WE	17×17	0.429	4.3	5.0	264	25	0.496	0.360	0.022	0.309	144.0	0.015
2	B&W	15×15	0.481	4.4	5.0	208	17	0.568	0.430	0.026	0.369	144.0	0.016
2	B&W	17×17	0.466	4.4	5.0	264	25	0.502	0.379	0.024	0.324	143.0	0.017
3	CE	16×16	0.442	4.8	5.0	236	5	0.506	0.382	0.023	0.3255	150.0	0.035
1	Ex/ANF[2]	14×14	0.375	5.0	- -	179	17	0.556	0.417	0.030	0.351	144.0	0.036
1	CE[2]	15×15	0.432	4.2	- -	216	9[5]	0.550	0.418	0.026	0.358	132.0	----
1	Ex/ANF[2]	15×15	0.431	4.2	- -	216	9[5]	0.550	0.417	0.030	0.358	131.8	----
1	CE[2]	16×16	0.403	4.8	- -	236	5	0.506	0.382	0.023	0.3255	136.7	0.035

Note: Parameters shown are nominal pre-irradiation values.

1. Vendor ID indicates the source of assembly base parameters, which are nominal, pre-irradiation values. Loading of assemblies meeting above limits is not restricted to the vendor(s) listed.
2. 14×14, 15×15 and 16×16 fuel manufactured for Prairie Island, Palisades and St. Lucie 2 cores, respectively. These are not generic fuel assemblies provided to multiple reactors.
3. Maximum initial enrichment without boron credit. Assemblies meeting this limit may contain a flow mixer (thimble plug), an ICI thimble, a burnable poison rod insert, or solid stainless steel rods (inserted in guide tubes).
4. Maximum initial enrichment with credit for a minimum soluble boron concentration of 1000 ppm in the spent fuel pool water. Assemblies meeting this limit may contain a flow mixer (thimble plug).
5. Nine nonfuel locations, which may be filled by solid nonfuel rods.

Table B2-3 BWR Fuel Assembly Characteristics

Fuel Class[1]	Vendor[4]	Array	Max. MTU	Max. wt % ^{235}U	No. of Fuel Rods	Max. Pitch (in)	Min. Rod Dia. (in)	Min. Clad Thick (in)	Max. Pellet Dia.(in)	Max. Active Length (in)[2]
4	Ex/ANF	7 × 7	0.196	4.5	48	0.738	0.570	0.036	0.490	144.0
4	Ex/ANF	8 × 8	0.177	4.7	63	0.641	0.484	0.036	0.405	145.2
4	Ex/ANF	9 × 9	0.173	4.4	79	0.572	0.424	0.030	0.357	145.2
4	GE	7 × 7	0.199	4.5	49	0.738	0.570	0.036	0.488	144.0
4	GE	7 × 7	0.198	4.5	49	0.738	0.563	0.032	0.487	144.0
4	GE	8 × 8	0.173	4.5	60	0.640	0.484	0.032	0.410	145.2
4	GE	8 × 8	0.179	4.5	62	0.640	0.483	0.032	0.410	145.2
4	GE	8 × 8	0.186	4.7	63	0.640	0.493	0.034	0.416	144.0
5	Ex/ANF	8 × 8	0.180	4.6	62	0.641	0.484	0.036	0.405	150.0
5	Ex/ANF	9 × 9	0.167	4.4	74[3]	0.572	0.424	0.030	0.357	150.0
5	Ex/ANF	9 × 9	0.178	4.5	79[3]	0.572	0.424	0.030	0.357	150.0
5	GE	7 × 7	0.193	4.7	49	0.738	0.563	0.037	0.477	146.0
5	GE	7 × 7	0.198	4.5	49	0.738	0.563	0.032	0.487	144.0
5	GE	8 × 8	0.179	4.5	60	0.640	0.484	0.032	0.410	150.0
5	GE	8 × 8	0.185	4.5	62	0.640	0.483	0.032	0.410	150.0
5	GE	8 × 8	0.188	4.7	63	0.640	0.493	0.034	0.416	146.0
5	GE	9 × 9	0.186	4.5	74[3]	0.566	0.441	0.028	0.376	150.0
5	GE	9 × 9	0.198	4.6	79[3]	0.566	0.441	0.028	0.376	150.0

Note: Parameters shown are nominal pre-irradiation values.
1. All fuel rods are zirconium alloy clad.
2. 150-inch active fuel length assemblies contain 6" natural uranium blankets on top and bottom.
3. Shortened active fuel length in some rods.
4. Vendor ID indicates the source of assembly base parameters, which are nominal, pre-irradiation values. Loading of assemblies meeting above limits is not restricted to the vendor(s) listed.

Table B2-4 Minimum Cooling Time Versus Burnup/Initial Enrichment for PWR Fuel

Minimum Initial Enrichment wt % ^{235}U (E)	Assembly Average Burnup ≤30 GWd/MTU Minimum Cooling Time [years]				30< Assembly Average Burnup ≤35 GWd/MTU Minimum Cooling Time [years]			
	14×14	15×15	16×16	17×17	14×14	15×15	16×16	17×17
1.9 ≤ E < 2.1	5	5	5	5	7	7	5	7
2.1 ≤ E < 2.3	5	5	5	5	7	6	5	6
2.3 ≤ E < 2.5	5	5	5	5	6	6	5	6
2.5 ≤ E < 2.7	5	5	5	5	6	6	5	6
2.7 ≤ E < 2.9	5	5	5	5	6	5	5	5
2.9 ≤ E < 3.1	5	5	5	5	5	5	5	5
3.1 ≤ E < 3.3	5	5	5	5	5	5	5	5
3.3 ≤ E < 3.5	5	5	5	5	5	5	5	5
3.5 ≤ E < 3.7	5	5	5	5	5	5	5	5
3.7 ≤ E < 3.9	5	5	5	5	5	5	5	5
3.9 ≤ E < 4.1	5	5	5	5	5	5	5	5
4.1 ≤ E < 4.3	5	5	5	5	5	5	5	5
4.3 ≤ E < 4.5	5	5	5	5	5	5	5	5
4.5 ≤ E < 4.7	5	5	5	5	5	5	5	5
4.7 ≤ E < 4.9	5	5	5	5	5	5	5	5
E ≥ 4.9	5	5	5	5	5	5	5	5
Minimum Initial Enrichment wt % ^{235}U (E)	**35< Assembly Average Burnup ≤40 GWd/MTU Minimum Cooling Time [years]**				**40< Assembly Average Burnup ≤45 GWd/MTU Minimum Cooling Time [years]**			
	14×14	**15×15**	**16×16**	**17×17**	**14×14**	**15×15**	**16×16**	**17×17**
1.9 ≤ E < 2.1	10	10	7	10	15	15	11	15
2.1 ≤ E < 2.3	9	9	6	9	14	13	9	13
2.3 ≤ E < 2.5	8	8	6	8	12	12	8	12
2.5 ≤ E < 2.7	8	7	6	7	11	11	7	11
2.7 ≤ E < 2.9	7	7	6	7	10	10	7	10
2.9 ≤ E < 3.1	7	6	6	7	9	9	7	9
3.1 ≤ E < 3.3	6	6	6	6	9	8	7	8
3.3 ≤ E < 3.5	6	6	6	6	8	8	7	8
3.5 ≤ E < 3.7	6	6	6	6	7	8	7	7
3.7 ≤ E < 3.9	6	6	6	6	7	8	7	7
3.9 ≤ E < 4.1	6	6	6	6	7	7	7	7
4.1 ≤ E < 4.3	5	6	6	6	6	7	7	7
4.3 ≤ E < 4.5	5	6	6	6	6	7	7	7
4.5 ≤ E < 4.7	5	6	5	6	6	7	6	7
4.7 ≤ E < 4.9	5	6	5	6	6	7	6	7
E ≥ 4.9	5	6	5	6	6	7	6	7

Table B2-4 Minimum Cooling Time Versus Burnup/Initial Enrichment for PWR Fuel (continued)

Minimum Initial Enrichment	45< Assembly Average Burnup ≤50 GWd/MTU Minimum Cooling Time [years]				50< Assembly Average Burnup ≤55 GWd/MTU Minimum Cooling Time [years]			
wt % ^{235}U (E)	14×14	15×15	16×16	17×17	14×14	15×15	16×16	17×17
1.9 ≤ E < 2.1	21	21	18	21	27	27	25	27
2.1 ≤ E < 2.3	19	19	16	19	25	25	23	25
2.3 ≤ E < 2.5	17	17	14	17	23	24	21	24
2.5 ≤ E < 2.7	16	16	12	16	21	22	19	22
2.7 ≤ E < 2.9	14	14	11	14	20	20	17	20
2.9 ≤ E < 3.1	13	13	9	13	18	18	15	18
3.1 ≤ E < 3.3	12	12	9	12	17	17	13	17
3.3 ≤ E < 3.5	11	11	9	11	15	15	12	15
3.5 ≤ E < 3.7	10	10	8	10	14	14	11	14
3.7 ≤ E < 3.9	9	10	8	9	13	13	11	13
3.9 ≤ E < 4.1	9	10	8	9	12	13	11	12
4.1 ≤ E < 4.3	8	10	8	9	11	13	10	12
4.3 ≤ E < 4.5	8	9	8	9	10	13	10	12
4.5 ≤ E < 4.7	7	9	8	9	10	12	10	12
4.7 ≤ E < 4.9	7	9	8	9	9	12	10	12
E ≥ 4.9	7	9	8	9	9	12	10	11

Minimum Initial Enrichment	55< Assembly Average Burnup ≤60 GWd/MTU Minimum Cooling Time [years]							
wt % ^{235}U (E)	14×14	15×15	16×16	17×17				
1.9 ≤ E < 2.1	33	34	32	34				
2.1 ≤ E < 2.3	31	32	30	32				
2.3 ≤ E < 2.5	29	30	28	30				
2.5 ≤ E < 2.7	28	28	26	28				
2.7 ≤ E < 2.9	26	26	24	26				
2.9 ≤ E < 3.1	24	24	22	24				
3.1 ≤ E < 3.3	22	23	20	23				
3.3 ≤ E < 3.5	21	21	18	21				
3.5 ≤ E < 3.7	19	19	17	20				
3.7 ≤ E < 3.9	18	18	15	18				
3.9 ≤ E < 4.1	17	18	14	17				
4.1 ≤ E < 4.3	15	17	14	16				
4.3 ≤ E < 4.5	14	17	14	16				
4.5 ≤ E < 4.7	13	17	14	16				
4.7 ≤ E < 4.9	12	17	13	16				
E ≥ 4.9	12	16	13	15				

Table B2-5 Minimum Cooling Time Versus Burnup/Initial Enrichment for BWR Fuel

Minimum Initial Enrichment wt % ^{235}U (E)	Assembly Average Burnup ≤30 GWd/MTU Minimum Cooling Time [years]			30< Assembly Average Burnup ≤35 GWd/MTU Minimum Cooling Time [years]		
	7×7	8×8	9×9	7×7	8×8	9×9
1.9 ≤ E < 2.1	5	5	5	8	7	7
2.1 ≤ E < 2.3	5	5	5	6	6	6
2.3 ≤ E < 2.5	5	5	5	6	5	6
2.5 ≤ E < 2.7	5	5	5	5	5	5
2.7 ≤ E < 2.9	5	5	5	5	5	5
2.9 ≤ E < 3.1	5	5	5	5	5	5
3.1 ≤ E < 3.3	5	5	5	5	5	5
3.3 ≤ E < 3.5	5	5	5	5	5	5
3.5 ≤ E < 3.7	5	5	5	5	5	5
3.7 ≤ E < 3.9	5	5	5	5	5	5
3.9 ≤ E < 4.1	5	5	5	5	5	5
4.1 ≤ E < 4.3	5	5	5	5	5	5
4.3 ≤ E < 4.5	5	5	5	5	5	5
4.5 ≤ E ≤ 4.7	5	5	5	5	5	5

Minimum Initial Enrichment wt % ^{235}U (E)	35< Assembly Average Burnup ≤40 GWd/MTU Minimum Cooling Time [years]			40< Assembly Average Burnup ≤45 GWd/MTU Minimum Cooling Time [years]		
	7×7	8×8	9×9	7×7	8×8	9×9
1.9 ≤ E < 2.1	16	14	15	26	24	25
2.1 ≤ E < 2.3	13	12	12	23	21	22
2.3 ≤ E < 2.5	11	9	10	20	18	19
2.5 ≤ E < 2.7	9	8	8	18	16	17
2.7 ≤ E < 2.9	8	7	7	15	13	14
2.9 ≤ E < 3.1	7	6	6	13	11	12
3.1 ≤ E < 3.3	6	6	6	11	10	10
3.3 ≤ E < 3.5	6	5	6	9	8	9
3.5 ≤ E < 3.7	6	5	6	8	7	7
3.7 ≤ E < 3.9	6	5	5	7	6	7
3.9 ≤ E < 4.1	5	5	5	7	6	7
4.1 ≤ E < 4.3	5	5	5	7	6	6
4.3 ≤ E < 4.5	5	5	5	6	6	6
4.5 ≤ E ≤ 4.7	5	5	5	6	6	6

Table B2-6 Maine Yankee Site Specific Fuel Canister Loading Position Summary

Site Specific Spent Fuel Configurations[1]	Est. Number of Assemblies[2]	Canister Loading Position
Total Number of Fuel Assemblies[3]	1,434	Any
Inserted Control Element Assembly (CEA)	168	Any
Inserted In-Core Instrument (ICI) Thimble	138	Any
Consolidated Fuel	2	Corner[4]
Fuel Rod Replaced by Rod Enriched to 1.95 wt %	3	Any
Fuel Rod Replaced by Stainless Steel Rod or Zirconium Alloy Rod	18	Any
Fuel Rods Removed	10	Corner[4]
Variable Enrichment[6]	72	Any
Variable Enrichment and Axial Blanket[6]	68	Any
Burnable Poison Rod Replaced by Hollow Zirconium Alloy Rod	80	Corner[4]
Damaged Fuel in MAINE YANKEE FUEL CAN	12	Corner[4]
Burnup between 45,000 and 50,000 MWD/MTU	90	Periphery[5]
MAINE YANKEE FUEL CAN	As Required	Corner[4]
Inserted Start-up Source	4	Corner[4]
Inserted CEA Finger Tip or ICI String Segment	1	Corner[4]

1. All spent fuel, including that held in a Maine Yankee fuel can, must conform to the loading limits presented in Tables B2-8 and B2-9 for cool time.
2. The number of fuel assemblies in some categories may vary depending on future fuel inspections.
3. Includes these site specific spent fuel configurations and standard fuel assemblies. Standard fuel assemblies may be loaded in any canister position.
4. Basket corner positions are positions 3, 6, 19, and 22 in Figure B2-1. Corner positions are also periphery positions.
5. Basket periphery positions are positions 1, 2, 3, 6, 7, 12, 13, 18, 19, 22, 23, and 24 in Figure B2-1. Periphery positions include the corner positions.
6. Variably enriched fuel assemblies have a maximum burnup of less than 30,000 MWD/MTU and enrichments greater than 1.9 wt %. The minimum required cool time for these assemblies is 5 years.

Table B2-7 Maine Yankee Site Specific Fuel Limits

A. Allowable Contents
   1. Combustion Engineering 14 × 14 PWR INTACT FUEL ASSEMBLIES meeting the specifications presented in Tables B2-1, B2-2 and B2-4.
   2. PWR INTACT FUEL ASSEMBLIES may contain inserted Control Element Assemblies (CEA), In-Core Instrument (ICI) Thimbles or Flow Mixers. CEAs or Flow Mixers may not be inserted in damaged fuel assemblies, consolidated fuel assemblies or assemblies with irradiated stainless steel replacement rods. Fuel assemblies with a CEA or Flow Mixer inserted must be loaded in a Class 2 CANISTER and cannot be loaded in a Class 1 CANISTER. Fuel assemblies without an inserted CEA or CEA Plug, including those with inserted ICI Thimbles, must be loaded in a Class 1 CANISTER.
   3. PWR INTACT FUEL ASSEMBLIES with fuel rods replaced with stainless steel or zirconium alloy rods or with uranium oxide rods nominally enriched up to 1.95 wt %.
   4. PWR INTACT FUEL ASSEMBLIES with fuel rods having variable enrichments with a maximum fuel rod enrichment up to 4.21 wt % ^{235}U and that also have a maximum planar average enrichment up to 3.99 wt % ^{235}U.
   5. PWR INTACT FUEL ASSEMBLIES with annular axial end blankets. The axial end blanket enrichment may be up to 2.6 wt % ^{235}U.
   6. PWR INTACT FUEL ASSEMBLIES with solid filler rods or burnable poison rods occupying up to 16 of 176 fuel rod positions.
   7. PWR INTACT FUEL ASSEMBLIES with one or more grid spacers missing or damaged such that the unsupported length of the fuel rods does not exceed 60 inches or with end fitting damage, including damaged or missing hold-down springs, as long as the assembly can be handled safely by normal means.

B. Allowable Contents requiring preferential loading based on shielding, criticality or thermal constraints. The preferential loading requirement for these fuel configurations is as described in Table B2-6.
   1. PWR INTACT FUEL ASSEMBLIES with up to 176 fuel rods missing from the fuel assembly lattice.
   2. PWR INTACT FUEL ASSEMBLIES with a burnup between 45,000 and 50,000 MWD/MTU that must be loaded in accordance with Tables B2-6 and B2-8.
   3. PWR INTACT FUEL ASSEMBLIES with a burnable poison rod replaced by a hollow zirconium alloy rod.

Table B2-7 Maine Yankee Site Specific Fuel Limits (continued)

4. INTACT FUEL ASSEMBLIES with a start-up source in a center guide tube. The assembly must be loaded in a basket corner position and must be loaded in a Class 1 CANISTER. Only one (1) start-up source may be loaded in any fuel assembly or any CANISTER.
5. PWR INTACT FUEL ASSEMBLIES with CEA ends (finger tips) and/or ICI segment inserted in corner guide tube positions. The assembly must also have a CEA plug installed. The assembly must be loaded in a basket corner position and must be loaded in a Class 2 CANISTER.
6. INTACT FUEL ASSEMBLIES may be loaded in a MAINE YANKEE FUEL CAN.
7. FUEL enclosed in a MAINE YANKEE FUEL CAN. The MAINE YANKEE FUEL CAN can only be loaded in a Class 1 CANISTER. The contents that must be loaded in the MAINE YANKEE FUEL CAN are:
   a) PWR fuel assemblies with up to two INTACT or DAMAGED FUEL rods inserted in each fuel assembly guide tube or with up to two burnable poison rods inserted in each guide tube. The rods inserted in the guide tubes cannot be from a different fuel assembly. The maximum number of rods in the fuel assembly (fuel rods plus inserted rods, including burnable poison rods) is 176.
   b) A DAMAGED FUEL ASSEMBLY with up to 100% of the fuel rods classified as damaged and/or damaged or missing assembly hardware components. A DAMAGED FUEL ASSEMBLY cannot have an inserted CEA or other non-fuel component.
   c) Individual INTACT or DAMAGED FUEL rods in a rod type structure, which may be a guide tube, to maintain configuration control.
   d) FUEL DEBRIS consisting of fuel rods with exposed fuel pellets or individual intact or partial fuel pellets not contained in fuel rods.

Table B2-7 Maine Yankee Site Specific Fuel Limits (continued)

e) CONSOLIDATED FUEL lattice structure with a 17 × 17 array formed by grids and top and bottom end fittings connected by four solid stainless steel rods. Maximum contents are 289 fuel rods having a total lattice weight ≤ 2,100 pounds. A CONSOLIDATED FUEL lattice cannot have an inserted CEA or other non-fuel component. Only one CONSOLIDATED FUEL lattice may be stored in any CANISTER.

C. Unenriched fuel assemblies are not authorized for loading.

D. A canister preferentially loaded in accordance with Table B2-8 may only contain fuel assemblies selected from the same loading pattern.

Table B2-8 Loading Table for Maine Yankee CE 14 × 14 Fuel with No Non-Fuel Material – Required Cool Time in Years Before Assembly is Acceptable

Enrichment	Burnup ≤ 30 GWD/MTU - Minimum Cool Time [years] for		
	Standard[1]	Preferential (I)[2]	Preferential (P)[3]
1.9 ≤ E < 2.1	5	5	5
2.1 ≤ E < 2.3	5	5	5
2.3 ≤ E < 2.5	5	5	5
2.5 ≤ E < 2.7	5	5	5
2.7 ≤ E < 2.9	5	5	5
2.9 ≤ E < 3.1	5	5	5
3.1 ≤ E < 3.3	5	5	5
3.3 ≤ E < 3.5	5	5	5
3.5 ≤ E < 3.7	5	5	5
3.7 ≤ E ≤ 4.2	5	5	5
Enrichment	**30 < Burnup ≤ 35 GWD/MTU – Minimum Cool Time [years] for**		
	Standard[1]	**Preferential (I)[2]**	**Preferential (P)[3]**
1.9 ≤ E < 2.1	5	5	5
2.1 ≤ E < 2.3	5	5	5
2.3 ≤ E < 2.5	5	5	5
2.5 ≤ E < 2.7	5	5	5
2.7 ≤ E < 2.9	5	5	5
2.9 ≤ E < 3.1	5	5	5
3.1 ≤ E < 3.3	5	5	5
3.3 ≤ E < 3.5	5	5	5
3.5 ≤ E < 3.7	5	5	5
3.7 ≤ E ≤ 4.2	5	5	5
Enrichment	**35 < Burnup ≤ 40 GWD/MTU - Minimum Cool Time [years] for**		
	Standard[1]	**Preferential (I)[2]**	**Preferential (P)[3]**
1.9 ≤ E < 2.1	7	7	5
2.1 ≤ E < 2.3	6	6	5
2.3 ≤ E < 2.5	6	6	5
2.5 ≤ E < 2.7	5	6	5
2.7 ≤ E < 2.9	5	6	5
2.9 ≤ E < 3.1	5	6	5
3.1 ≤ E < 3.3	5	6	5
3.3 ≤ E < 3.5	5	6	5
3.5 ≤ E < 3.7	5	6	5
3.7 ≤ E ≤ 4.2	5	6	5

1. "Standard" loading pattern: allowable decay heat = 0.958 kW per assembly
2. Preferential" loading pattern, interior basket locations: allowable heat decay .867 kW per assembly
3. Preferential" loading pattern, periphery basket locations: allowable heat decay = 1.05 kW per assembly

Table B2-8 Loading Table for Maine Yankee CE 14 × 14 Fuel with No Non-Fuel Material – Required Cool Time in Years Before Assembly is Acceptable (Continued)

Enrichment	40 < Burnup ≤ 45 GWD/MTU - Minimum Cool Time [years] for		
	Standard[1]	**Preferential (I)[2]**	**Preferential (P)[3]**
1.9 ≤ E < 2.1	11	11	6
2.1 ≤ E < 2.3	9	9	6
2.3 ≤ E < 2.5	8	8	6
2.5 ≤ E < 2.7	7	7	6
2.7 ≤ E < 2.9	7	7	6
2.9 ≤ E < 3.1	6	7	6
3.1 ≤ E < 3.3	6	7	5
3.3 ≤ E < 3.5	6	7	5
3.5 ≤ E < 3.7	6	7	5
3.7 ≤ E ≤ 4.2	6	7	5
Enrichment	**45 < Burnup ≤ 50 GWD/MTU - Minimum Cool Time [years] for**		
	Standard[1]	**Preferential (I)[2]**	**Preferential (P)[3]**
1.9 ≤ E < 2.1	Not allowed	Not allowed	7
2.1 ≤ E < 2.3	Not allowed	Not allowed	7
2.3 ≤ E < 2.5	Not allowed	Not allowed	7
2.5 ≤ E < 2.7	Not allowed	Not allowed	7
2.7 ≤ E < 2.9	Not allowed	Not allowed	7
2.9 ≤ E < 3.1	Not allowed	Not allowed	7
3.1 ≤ E < 3.3	Not allowed	Not allowed	7
3.3 ≤ E < 3.5	Not allowed	Not allowed	6
3.5 ≤ E < 3.7	Not allowed	Not allowed	6
3.7 ≤ E ≤ 4.2	Not allowed	Not allowed	6

1. "Standard" loading pattern: allowable decay heat = 0.958 kW per assembly
2. "Preferential" loading pattern, interior basket locations: allowable heat decay = 0.867 kW per assembly
3. "Preferential" loading pattern, periphery basket locations: allowable heat decay = 1.05 kW per assembly

Table B2-9 Loading Table for Maine Yankee CE 14 × 14 Fuel Containing CEA Cooled to Indicated Time

Enrichment	≤ 30 GWD/MTU Burnup - Minimum Cool Time in Years for				
	No CEA (Class 2)	5 Year CEA	10 Year CEA	15 Year CEA	20 Year CEA
1.9 ≤ E < 2.1	5	5	5	5	5
2.1 ≤ E < 2.3	5	5	5	5	5
2.3 ≤ E < 2.5	5	5	5	5	5
2.5 ≤ E < 2.7	5	5	5	5	5
2.7 ≤ E < 2.9	5	5	5	5	5
2.9 ≤ E < 3.1	5	5	5	5	5
3.1 ≤ E < 3.3	5	5	5	5	5
3.3 ≤ E < 3.5	5	5	5	5	5
3.5 ≤ E < 3.7	5	5	5	5	5
3.7 ≤ E ≤ 4.2	5	5	5	5	5
Enrichment	30 < Burnup ≤ 35 GWD/MTU - Minimum Cool Time in Years for				
	No CEA (Class 2)	5 Year CEA	10 Year CEA	15 Year CEA	20 Year CEA
1.9 ≤ E < 2.1	5	5	5	5	5
2.1 ≤ E < 2.3	5	5	5	5	5
2.3 ≤ E < 2.5	5	5	5	5	5
2.5 ≤ E < 2.7	5	5	5	5	5
2.7 ≤ E < 2.9	5	5	5	5	5
2.9 ≤ E < 3.1	5	5	5	5	5
3.1 ≤ E < 3.3	5	5	5	5	5
3.3 ≤ E < 3.5	5	5	5	5	5
3.5 ≤ E < 3.7	5	5	5	5	5
3.7 ≤ E ≤ 4.2	5	5	5	5	5
Enrichment	35 < Burnup ≤ 40 GWD/MTU - Minimum Cool Time in Years for				
	No CEA (Class 2)	5 Year CEA	10 Year CEA	15 Year CEA	20 Year CEA
1.9 ≤ E < 2.1	7	7	7	7	7
2.1 ≤ E < 2.3	6	6	6	6	6
2.3 ≤ E < 2.5	6	6	6	6	6
2.5 ≤ E < 2.7	5	6	5	5	5
2.7 ≤ E < 2.9	5	6	5	5	5
2.9 ≤ E < 3.1	5	6	5	5	5
3.1 ≤ E < 3.3	5	5	5	5	5
3.3 ≤ E < 3.5	5	5	5	5	5
3.5 ≤ E < 3.7	5	5	5	5	5
3.7 ≤ E ≤ 4.2	5	5	5	5	5
Enrichment	40 < Burnup ≤ 45 GWD/MTU - Minimum Cool Time in Years for				
	No CEA (Class 2)	5 Year CEA	10 Year CEA	15 Year CEA	20 Year CEA
1.9 ≤ E < 2.1	11	11	11	11	11
2.1 ≤ E < 2.3	9	9	9	9	9
2.3 ≤ E < 2.5	8	8	8	8	8
2.5 ≤ E < 2.7	7	7	7	7	7
2.7 ≤ E < 2.9	7	7	7	7	7
2.9 ≤ E < 3.1	6	6	6	6	6
3.1 ≤ E < 3.3	6	6	6	6	6
3.3 ≤ E < 3.5	6	6	6	6	6
3.5 ≤ E < 3.7	6	6	6	6	6
3.7 ≤ E ≤ 4.2	6	6	6	6	6

B 3.0 DESIGN FEATURES

B 3.1 Site

B 3.1.1 Site Location

The NAC-UMS® SYSTEM is authorized for general use by 10 CFR 50 license holders at various site locations under the provisions of 10 CFR 72, Subpart K.

B 3.2 Design Features Important for Criticality Control

B 3.2.1 CANISTER – INTACT FUEL ASSEMBLIES

a) Minimum ^{10}B loading in the neutron absorbers:
   1. PWR – 0.025g/cm^2
   2. BWR – 0.011g/cm^2

b) Minimum length of INTACT FUEL ASSEMBLY internal structure and bottom end fitting and/or spacers shall ensure the minimum distance to the fuel region from the base of the CANISTER is:
   1. PWR – 3.2 inches
   2. BWR – 6.2 inches

c) Soluble boron concentration in the PWR fuel pool and CANISTER water:
   1. Fuel meeting the enrichment limits in Table B2–2 without boron - 0 ppm.
   2. Fuel meeting the enrichment limits in Table B2–2 with boron ≥ 1000 ppm.

d) Minimum water temperature for PWR fuel to ensure boron is soluble:
   1. Temperature should be 5 - 10°F higher than the minimum needed to ensure solubility.

e) Minimum flux trap (structural disk web) thickness:

   PWR (flux trap locations per Figure B2-1)
   - Location "A" – 1.47 inches
   - Location "B" – 0.97 inch
   - Location "C" – 0.845 inch
   - Location "D" – 1.47 inches

   BWR (flux trap locations per Figure B2-2)
   - Location "A" – 0.62 inch
   - Location "B" – 0.47 inch

(continued)

B 3.3 Codes and Standards

The American Society of Mechanical Engineers Boiler and Pressure Vessel Code (ASME Code), 1995 Edition with Addenda through 1995, is the governing Code for the NAC-UMS® CANISTER.

The American Concrete Institute Specifications ACI-349 (1985) and ACI-318 (1995) govern the NAC-UMS® CONCRETE CASK design and construction, respectively.

The American National Standards Institute ANSI N14.6 (1993) and NUREG-0612 govern the NAC-UMS® TRANSFER CASK design, operation, fabrication, testing, inspection and maintenance.

B 3.3.1 Exceptions to Codes, Standards, and Criteria

Table B3-1 lists exceptions to the ASME Code for the design of the NAC-UMS® SYSTEM.

B 3.3.2 Construction/Fabrication Exceptions to Codes, Standards, and Criteria

Proposed alternatives to ASME Code, Section III, 1995 Edition with Addenda, through 1995, including exceptions listed in Specification B3.3.1, may be used when authorized by the Director of the Office of Nuclear Material Safety and Safeguards or designee. The request for such alternatives should demonstrate that:

1. The proposed alternatives would provide an acceptable level of quality and safety, or
2. Compliance with the specified requirements of ASME Code, Section III, 1995 Edition with Addenda through 1995, would result in hardship or unusual difficulty without a compensating increase in the level of quality and safety.

Requests for exceptions shall be submitted in accordance with 10 CFR 72.4.

Table B3-1 List of ASME Code Exceptions for the NAC-UMS® SYSTEM (continued)

Component	Reference ASME Code Section/Article	Code Requirement	Exception, Justification and Compensatory Measures
CANISTER Vessel and Shield Lid	NB-6111	All completed pressure retaining systems shall be pressure tested.	The CANISTER shield lid to shell weld is performed in the field following fuel assembly loading. The CANISTER is then pneumatically (air/nitrogen/ helium-over-water) pressure tested as defined in Chapter 9 and described in Chapter 8. Accessibility for leakage inspections precludes a Code compliant hydrostatic test. The shield lid-to-shell weld is also leak tested to the leak-tight criteria of ANSI N14.5. The vent port and drain port cover welds are examined by root and final PT examination. The structural lid enclosure weld is examined by progressive PT or UT and final surface PT.
CANISTER Vessel	NB-7000	Vessels are required to have overpressure protection.	No overpressure protection is provided. The function of the CANISTER is to confine radioactive contents under normal, off-normal, and accident conditions of storage. The CANISTER vessel is designed to withstand a maximum internal pressure considering 100% fuel rod failure and maximum accident temperatures.
CANISTER Vessel	NB-8000	States requirements for nameplates, stamping and reports per NCA-8000.	The NAC-UMS® SYSTEM is marked and identified in accordance with 10 CFR 72 requirements. Code stamping is not required. The QA data package will be in accordance with NAC's approved QA program. The completion of an ASME Design Specification, Design Report and Overpressure Protection Report is not required.

August 2007

Revision UMSS-07A

NAC-UMS

Universal MPC System

FINAL SAFETY ANALYSIS REPORT

for the UMS Universal Storage System

Docket No. 72-1015

NAC INTERNATIONAL

Atlanta Corporate Headquarters: 3930 East Jones Bridge Road, Norcross, Georgia 30092 USA
Phone 770-447-1144, Fax 770-447-1797, www.nacintl.com

UMS® FSAR Changed Pages

List of Effective Pages

List of Effective Pages

Chapter 1

1-i ..... Revision 3
1-ii ..... Revision 5B
1-1 ..... Revision 0
1-2 ..... Revision 5
1-3 ..... Revision UMSS-07A
1-4 ..... Revision UMSS-07A
1-5 ..... Revision UMSS-07A
1-6 ..... Revision UMSS-07A
1-7 ..... Revision UMSS-07A
1-8 ..... Revision UMSS-07A
1-9 ..... Revision UMSS-07A
1.1-1 ..... Revision 3
1.1-2 ..... Revision 4
1.1-3 ..... Revision 3
1.1-4 ..... Revision 0
1.2-1 ..... Revision 3
1.2-2 ..... Revision 3
1.2-3 ..... Revision UMSS-07A
1.2-4 ..... Revision 3
1.2-5 ..... Revision 3
1.2-6 ..... Revision 3
1.2-7 ..... Revision UMSS-06A
1.2-8 ..... Revision 3
1.2-9 ..... Revision 3
1.2-10 ..... Revision UMSS-07A
1.2-11 ..... Revision 5D
1.2-12 ..... Revision 5D
1.2-13 ..... Revision UMSS-07A
1.2-14 ..... Revision 5D
1.2-15 ..... Revision 5D
1.2-16 ..... Revision 5D
1.2-17 ..... Revision 5D
1.2-18 ..... Revision 5D
1.2-19 ..... Revision 5D
1.2-20 ..... Revision 5D
1.2-21 ..... Revision 5D
1.2-22 ..... Revision 5D
1.2-23 ..... Revision 5D
1.2-24 ..... Revision 5D
1.2-25 ..... Revision 5D
1.2-26 ..... Revision 5D
1.2-27 ..... Revision 5D
1.2-28 ..... Revision 5D
1.2-29 ..... Revision 5D
1.3-1 ..... Revision 4
1.3-2 ..... Revision 5
1.3-3 ..... Revision 4
1.4-1 ..... Revision 0
1.4-2 ..... Revision 0
1.5-1 ..... Revision 0
1.5-2 ..... Revision 0
1.5-3 ..... Revision 0
1.5-4 ..... Revision 0
1.5-5 ..... Revision 3
1.5-6 ..... Revision 0
1.5-7 ..... Revision 0
1.5-8 ..... Revision 5D
1.5-9 ..... Revision 3
1.5-10 ..... Revision 0
1.5-11 ..... Revision 3
1.5-12 ..... Revision 0
1.5-13 ..... Revision 0
1.5-14 ..... Revision 0
1.5-15 ..... Revision 0
1.5-16 ..... Revision 0
1.5-17 ..... Revision 3
1.5-18 ..... Revision 0
1.5-19 ..... Revision 0
1.5-20 ..... Revision 0

List of Effective Pages (continued)

1.5-21 ..... Revision 5D
1.5-22 ..... Revision 4
1.5-23 ..... Revision 0
1.5-24 ..... Revision 0
1.5-25 ..... Revision 0
1.5-26 ..... Revision 0
1.5-27 ..... Revision 3
1.5-28 ..... Revision UMSS-07A
1.5-29 ..... Revision 0
1.5-30 ..... Revision UMSS-07A
1.5-31 ..... Revision 0
1.5-32 ..... Revision 0
1.5-33 ..... Revision 3
1.5-34 ..... Revision 5
1.5-35 ..... Revision 0
1.5-36 ..... Revision 3
1.5-37 ..... Amendment 2
1.5-38 ..... Revision UMSS-07A
1.5-39 ..... Revision 0
1.5-40 ..... Revision 0
1.5-41 ..... Revision 0
1.5-42 ..... Revision 0
1.5-43 ..... Revision 0
1.5-44 ..... Revision UMSS-07A
1.5-45 ..... Revision 0
1.5-46 ..... Revision 0
1.5-47 ..... Revision 3
1.5-48 ..... Revision 3
1.5-49 ..... Revision 0
1.5-50 ..... Revision 0
1.5-51 ..... Revision 0
1.5-52 ..... Revision 0
1.5-53 ..... Revision 0
1.5-54 ..... Revision 0
1.6-1 ..... Revision UMSS-06A
1.7-1 ..... Revision 3
1.7-2 ..... Revision 4
1.7-3 ..... Revision 4
1.8-1 ..... Revision UMSS-06A
1.8-2 ..... Revision 5

31 drawings (see Section 1.8)

Chapter 2

2-i ..... Revision 3
2-ii ..... Revision 3
2-iii ..... Revision 3
2-iv ..... Revision UMSS-06A
2-1 ..... Revision UMSS-07A
2-2 ..... Revision 5
2-3 ..... Revision 3
2.1-1 ..... Revision 5
2.1.1-1 ..... Revision UMSS-07A
2.1.1-2 ..... Revision UMSS-07A
2.1.1-3 ..... Revision UMSS-06A
2.1.1-4 ..... Revision UMSS-06A
2.1.2-1 ..... Revision UMSS-07A
2.1.2-2 ..... Revision UMSS-07A
2.1.2-3 ..... Revision UMSS-06A
2.1.3-1 ..... Revision UMSS-07A
2.1.3-2 ..... Revision UMSS-07A
2.1.3-3 ..... Revision UMSS-07A
2.1.3-4 ..... Revision UMSS-07A
2.1.3-5 ..... Revision 3
2.1.3-6 ..... Revision UMSS-07A
2.1.3-7 ..... Revision 3
2.1.3-8 ..... Revision 3
2.1.3-9 ..... Revision 5
2.1.3-10 ..... Revision 3
2.1.3-11 ..... Revision 3

List of Effective Pages (continued)

2.1.3-12 ..... Revision 3
2.1.3-13 ..... Revision 3
2.1.3-14 ..... Revision 3
2.2-1 ..... Amendment 1
2.2-2 ..... Revision 0
2.2-3 ..... Revision 0
2.2-4 ..... Revision 5
2.2-5 ..... Revision 3
2.2-6 ..... Revision 0
2.2-7 ..... Revision 0
2.2-8 ..... Revision 0
2.2-9 ..... Revision 0
2.2-10 ..... Revision 0
2.2-11 ..... Revision 3
2.3-1 ..... Amendment 2
2.3-2 ..... Amendment 2
2.3-3 ..... Revision 3
2.3-4 ..... Revision 3
2.3-5 ..... Revision 5D
2.3-6 ..... Revision 5D
2.3-7 ..... Revision 0
2.3-8 ..... Revision 3
2.3-9 ..... Revision 3
2.3-10 ..... Revision 0
2.3-11 ..... Revision 5
2.3-12 ..... Revision 3
2.3-13 ..... Revision 3
2.3-14 ..... Revision 3
2.3-15 ..... Revision 3
2.3-16 ..... Revision 3
2.3-17 ..... Revision 3
2.3-18 ..... Revision 3
2.3-19 ..... Revision 3
2.3-20 ..... Revision 3
2.4-1 ..... Revision 3
2.4-2 ..... Revision 0
2.4-3 ..... Revision 0
2.4-4 ..... Revision 0
2.5-1 ..... Revision 3
2.5-2 ..... Revision 3

Chapter 3

3-i ..... Revision 3
3-ii ..... Revision UMSS-07A
3-iii ..... Revision 3
3-iv ..... Revision 3
3-v ..... Revision 3
3-vi ..... Revision 3
3-vii ..... Revision 3
3-viii ..... Revision 3
3.1-1 ..... Revision 3
3.1-2 ..... Revision 3
3.1-3 ..... Revision 3
3.1-4 ..... Revision 3
3.1-5 ..... Revision 3
3.1-6 ..... Revision 3
3.1-7 ..... Revision 3
3.2-1 ..... Revision 0
3.2-2 ..... Revision 3
3.2-3 ..... Revision 3
3.2-4 ..... Revision 3
3.3-1 ..... Revision 3
3.3-2 ..... Revision 3
3.3-3 ..... Revision 3
3.3-4 ..... Revision 3
3.3-5 ..... Revision 3
3.3-6 ..... Revision 3
3.3-7 ..... Revision 3
3.3-8 ..... Revision 3
3.3-9 ..... Revision 3

List of Effective Pages (continued)

3.3-10 ..... Revision 3
3.3-11 ..... Revision 3
3.3-12 ..... Revision 3
3.3-13 ..... Revision 3
3.3-14 ..... Revision 3
3.3-15 ..... Revision 3
3.3-16 ..... Revision UMSS-06A
3.4.1-1 ..... Amendment 2
3.4.1-2 ..... Revision 4
3.4.1-3 ..... Amendment 2
3.4.1-4 ..... Amendment 2
3.4.1-5 ..... Revision 3
3.4.1-6 ..... Revision 4
3.4.1-7 ..... Revision 4
3.4.1-8 ..... Revision 4
3.4.1-9 ..... Revision 3
3.4.1-10 ..... Revision 3
3.4.1-11 ..... Revision 3
3.4.1-12 ..... Revision 3
3.4.2-1 ..... Revision UMSS-06A
3.4.2-2 ..... Revision 4
3.4.3-1 ..... Revision 4
3.4.3-2 ..... Revision 3
3.4.3-3 ..... Revision 3
3.4.3-4 ..... Revision 0
3.4.3-5 ..... Revision 3
3.4.3-6 ..... Revision 3
3.4.3-7 ..... Revision 3
3.4.3-8 ..... Revision 3
3.4.3-9 ..... Revision 3
3.4.3-10 ..... Revision 3
3.4.3-11 ..... Revision 3
3.4.3-12 ..... Revision 3
3.4.3-13 ..... Revision 3
3.4.3-14 ..... Revision 3
3.4.3-15 ..... Revision 3
3.4.3-16 ..... Revision 3
3.4.3-17 ..... Revision 3
3.4.3-18 ..... Revision 3
3.4.3-19 ..... Revision 3
3.4.3-20 ..... Revision 3
3.4.3-21 ..... Revision 3
3.4.3-22 ..... Revision 3
3.4.3-23 ..... Revision 5F
3.4.3-24 ..... Revision 5F
3.4.3-25 ..... Revision 5F
3.4.3-26 ..... Revision 5F
3.4.3-27 ..... Revision 3
3.4.3-28 ..... Revision 4
3.4.3-29 ..... Revision 3
3.4.3-30 ..... Revision 3
3.4.3-31 ..... Revision 3
3.4.3-32 ..... Revision 3
3.4.3-33 ..... Revision 3
3.4.3-34 ..... Revision 3
3.4.3-35 ..... Revision 3
3.4.3-36 ..... Revision 3
3.4.3-37 ..... Revision 3
3.4.3-38 ..... Revision 3
3.4.3-39 ..... Revision 3
3.4.3-40 ..... Revision 3
3.4.3-41 ..... Revision 3
3.4.3-42 ..... Revision 3
3.4.3-43 ..... Revision 3
3.4.3-44 ..... Revision 3
3.4.3-45 ..... Revision 3
3.4.3-46 ..... Revision 3
3.4.3-47 ..... Revision 3
3.4.3-48 ..... Revision 3
3.4.3-49 ..... Revision 3

List of Effective Pages (continued)

3.4.3-50 ..... Revision 3
3.4.3-51 ..... Revision 3
3.4.3-52 ..... Revision 3
3.4.3-53 ..... Revision 3
3.4.3-54 ..... Revision 3
3.4.3-55 ..... Revision 3
3.4.3-56 ..... Revision 3
3.4.3-57 ..... Revision 3
3.4.3-58 ..... Revision 3
3.4.3-59 ..... Revision 3
3.4.3-60 ..... Revision 3
3.4.3-61 ..... Revision 3
3.4.3-62 ..... Revision 3
3.4.3-63 ..... Revision 3
3.4.3-64 ..... Revision 3
3.4.3-65 ..... Revision 3
3.4.3-66 ..... Revision 3
3.4.3-67 ..... Revision 3
3.4.3-68 ..... Revision 3
3.4.3-69 ..... Revision 3
3.4.3-70 ..... Revision 3
3.4.3-71 ..... Revision 3
3.4.3-72 ..... Revision 3
3.4.3-73 ..... Revision 3
3.4.3-74 ..... Revision 3
3.4.3-75 ..... Revision 3
3.4.3-76 ..... Revision 3
3.4.3-77 ..... Revision 3
3.4.3-78 ..... Revision 3
3.4.3-79 ..... Revision 3
3.4.3-80 ..... Revision 3
3.4.3-81 ..... Revision 3
3.4.3-82 ..... Revision 3
3.4.3-83 ..... Revision 3
3.4.3-84 ..... Revision 3
3.4.3-85 ..... Revision 3
3.4.3-86 ..... Revision 3
3.4.3-87 ..... Revision 3
3.4.3-88 ..... Revision 3
3.4.3-89 ..... Revision 3
3.4.3-90 ..... Revision 3
3.4.3-91 ..... Revision 3
3.4.3-92 ..... Revision 3
3.4.3-93 ..... Revision 3
3.4.3-94 ..... Revision 3
3.4.3-95 ..... Revision 3
3.4.3-96 ..... Revision 3
3.4.3-97 ..... Revision 3
3.4.3-98 ..... Revision 3
3.4.4-1 ..... Revision 0
3.4.4-2 ..... Revision 3
3.4.4-3 ..... Revision 3
3.4.4-4 ..... Revision 3
3.4.4-5 ..... Revision 3
3.4.4-6 ..... Revision 3
3.4.4-7 ..... Revision 3
3.4.4-8 ..... Revision 0
3.4.4-9 ..... Revision 3
3.4.4-10 ..... Revision 0
3.4.4-11 ..... Revision 3
3.4.4-12 ..... Revision 3
3.4.4-13 ..... Revision 3
3.4.4-14 ..... Revision 3
3.4.4-15 ..... Revision 3
3.4.4-16 ..... Revision 3
3.4.4-17 ..... Revision 3
3.4.4-18 ..... Revision 3
3.4.4-19 ..... Revision 3
3.4.4-20 ..... Revision 3
3.4.4-21 ..... Revision 0

List of Effective Pages (continued)

3.4.4-22 ..... Revision 0
3.4.4-23 ..... Revision 0
3.4.4-24 ..... Revision 0
3.4.4-25 ..... Revision 0
3.4.4-26 ..... Revision 0
3.4.4-27 ..... Revision 0
3.4.4-28 ..... Revision 0
3.4.4-29 ..... Revision 0
3.4.4-30 ..... Revision 0
3.4.4-31 ..... Revision 0
3.4.4-32 ..... Revision 0
3.4.4-33 ..... Revision 0
3.4.4-34 ..... Revision 0
3.4.4-35 ..... Revision 0
3.4.4-36 ..... Revision 0
3.4.4-37 ..... Revision 0
3.4.4-38 ..... Revision 0
3.4.4-39 ..... Revision 3
3.4.4-40 ..... Revision 3
3.4.4-41 ..... Revision 3
3.4.4-42 ..... Revision 3
3.4.4-43 ..... Revision 3
3.4.4-44 ..... Revision 3
3.4.4-45 ..... Revision 3
3.4.4-46 ..... Revision 3
3.4.4-47 ..... Revision 3
3.4.4-48 ..... Revision 3
3.4.4-49 ..... Revision 0
3.4.4-50 ..... Revision 0
3.4.4-51 ..... Revision 0
3.4.4-52 ..... Revision 3
3.4.4-53 ..... Revision 3
3.4.4-54 ..... Revision 3
3.4.4-55 ..... Revision 3
3.4.4-56 ..... Revision 3
3.4.4-57 ..... Revision 3
3.4.4-58 ..... Revision 3
3.4.4-59 ..... Revision 3
3.4.4-60 ..... Revision 3
3.4.4-61 ..... Revision 3
3.4.4-62 ..... Revision 3
3.4.4-63 ..... Revision 3
3.4.4-64 ..... Revision 3
3.4.4-65 ..... Revision 0
3.4.4-66 ..... Revision 3
3.4.4-67 ..... Revision 3
3.4.4-68 ..... Revision 3
3.4.4-69 ..... Revision 3
3.4.4-70 ..... Revision 0
3.4.4-71 ..... Revision 0
3.4.4-72 ..... Revision 0
3.4.4-73 ..... Revision 0
3.4.4-74 ..... Revision 0
3.4.4-75 ..... Revision 3
3.4.4-76 ..... Revision 3
3.4.4-77 ..... Revision 3
3.4.5-1 ..... Revision 3
3.5-1 ..... Revision 4
3.6-1 ..... Revision UMSS-07A
3.6-2 ..... Revision 4
3.6-3 ..... Revision UMSS-07A
3.6-4 ..... Revision 3
3.6-5 ..... Revision 3
3.6-6 ..... Amendment 1
3.6-7 ..... Revision 3
3.6-8 ..... Revision 3
3.7-1 ..... Revision 3
3.7-2 ..... Revision 3
3.7-3 ..... Revision UMSS-06A
3.8-1 ..... Revision 3

List of Effective Pages (continued)

3.8-2 ..... Revision 0
3.8-3 ..... Revision 0
3.8-4 ..... Revision 0
3.8-5 ..... Revision 0
3.8-6 ..... Revision 0
3.8-7 ..... Revision 0
3.8-8 ..... Revision 0
3.8-9 ..... Revision 0
3.8-10 ..... Revision 0
3.8-11 ..... Revision 0
3.8-12 ..... Revision 3
3.8-13 ..... Revision 3
3.8-14 ..... Revision 3
3.8-15 ..... Revision 3

Chapter 4

4-i ..... Revision 3
4-ii ..... Revision 3
4-iii ..... Revision 3
4-iv ..... Revision 3
4-v ..... Revision 4
4-vi ..... Revision UMSS-07A
4.1-1 ..... Revision 3
4.1-2 ..... Revision UMSS-07A
4.1-3 ..... Revision UMSS-07A
4.1-4 ..... Revision 0
4.1-5 ..... Revision 4
4.1-6 ..... Revision 5
4.1-7 ..... Revision 5
4.1-8 ..... Revision 5
4.2-1 ..... Revision 3
4.2-2 ..... Revision 3
4.2-3 ..... Revision 3
4.2-4 ..... Revision 0
4.2-5 ..... Revision 4
4.2-6 ..... Revision 0
4.2-7 ..... Revision 3
4.3-1 ..... Revision 3
4.3-2 ..... Revision 3
4.3-3 ..... Revision 3
4.4-1 ..... Revision 3
4.4.1-1 ..... Revision 3
4.4.1-2 ..... Revision 4
4.4.1-3 ..... Revision 3
4.4.1-4 ..... Revision 0
4.4.1-5 ..... Revision 0
4.4.1-6 ..... Revision 0
4.4.1-7 ..... Revision 0
4.4.1-8 ..... Amendment 2
4.4.1-9 ..... Revision 5
4.4.1-10 ..... Revision 3
4.4.1-11 ..... Revision 3
4.4.1-12 ..... Revision 3
4.4.1-13 ..... Revision 3
4.4.1-14 ..... Revision 3
4.4.1-15 ..... Revision 3
4.4.1-16 ..... Revision 3
4.4.1-17 ..... Revision 3
4.4.1-18 ..... Revision 3
4.4.1-19 ..... Revision 3
4.4.1-20 ..... Revision 3
4.4.1-21 ..... Revision 3
4.4.1-22 ..... Revision 3
4.4.1-23 ..... Revision 3
4.4.1-24 ..... Revision 3
4.4.1-25 ..... Revision 3
4.4.1-26 ..... Revision 3
4.4.1-27 ..... Revision 4
4.4.1-28 ..... Revision 5
4.4.1-29 ..... Revision 3

List of Effective Pages (continued)

4.4.1-30 ..... Revision 4
4.4.1-31 ..... Revision 3
4.4.1-32 ..... Revision 3
4.4.1-33 ..... Revision 3
4.4.1-34 ..... Revision 3
4.4.1-35 ..... Revision 4
4.4.1-36 ..... Revision 3
4.4.1-37 ..... Revision 3
4.4.1-38 ..... Revision 4
4.4.1-39 ..... Revision 3
4.4.1-40 ..... Revision 3
4.4.1-41 ..... Revision 4
4.4.1-42 ..... Revision 4
4.4.1-43 ..... Revision 4
4.4.1-44 ..... Revision 3
4.4.1-45 ..... Revision 3
4.4.1-46 ..... Revision 3
4.4.1-47 ..... Revision 3
4.4.1-48 ..... Revision 3
4.4.1-49 ..... Revision 3
4.4.2-1 ..... Revision 0
4.4.3-1 ..... Revision 4
4.4.3-2 ..... Revision 4
4.4.3-3 ..... Revision 4
4.4.3-4 ..... Revision 4
4.4.3-5 ..... Revision 3
4.4.3-6 ..... Revision 3
4.4.3-7 ..... Revision 3
4.4.3-8 ..... Revision 3
4.4.3-9 ..... Revision 3
4.4.3-10 ..... Revision 3
4.4.3-11 ..... Revision 3
4.4.3-12 ..... Revision 3
4.4.3-13 ..... Revision 3
4.4.3-14 ..... Revision 5
4.4.3-15 ..... Revision 5
4.4.3-16 ..... Revision 3
4.4.3-17 ..... Revision 4
4.4.3-18 ..... Revision 3
4.4.3-19 ..... Revision 3
4.4.3-20 ..... Revision 3
4.4.3-21 ..... Revision 3
4.4.3-22 ..... Revision 3
4.4.4-1 ..... Revision 0
4.4.5-1 ..... Revision UMSS-06A
4.4.5-2 ..... Revision 5
4.4.5-3 ..... Revision 5
4.4.5-4 ..... Revision UMSS-07A
4.4.5-5 ..... Revision 3
4.4.6-1 ..... Revision 0
4.4.7-1 ..... Revision 3
4.5-1 ..... Revision 5
4.5-2 ..... Revision 4
4.5-3 ..... Revision 4
4.5-4 ..... Amendment 2
4.5-5 ..... Revision 3
4.5-6 ..... Revision 4
4.5-7 ..... Revision 3
4.5-8 ..... Revision UMSS-07A
4.5-9 ..... Revision 3
4.5-10 ..... Revision 3
4.5-11 ..... Amendment 2
4.5-12 ..... Amendment 2
4.5-13 ..... Amendment 2
4.5-14 ..... Amendment 2
4.5-15 ..... Amendment 2
4.5-16 ..... Amendment 2
4.5-17 ..... Revision 3
4.5-18 ..... Revision 3
4.5-19 ..... Revision 3

List of Effective Pages (continued)

4.6-1 ..... Revision 3
4.6-2 ..... Revision 3
4.6-3 ..... Revision 0
4.6-4 ..... Revision UMSS-07A

Chapter 5

5-i ..... Revision UMSS-06A
5-ii ..... Revision 3
5-iii ..... Revision UMSS-06A
5-iv ..... Revision 3
5-v ..... Revision 3
5-vi ..... Revision UMSS-06A
5-vii ..... Revision UMSS-06A
5-viii ..... Revision UMSS-06A
5-ix ..... Revision 3
5.1-1 ..... Revision 3
5.1-2 ..... Revision 3
5.1-3 ..... Revision 3
5.1-4 ..... Revision 3
5.1-5 ..... Revision 3
5.1-6 ..... Revision 3
5.1-7 ..... Revision 3
5.1-8 ..... Revision 3
5.1-9 ..... Revision 3
5.1-10 ..... Revision 3
5.1-11 ..... Revision 3
5.2-1 ..... Revision UMSS-06A
5.2-2 ..... Revision UMSS-06A
5.2-3 ..... Revision UMSS-06A
5.2-4 ..... Revision UMSS-07A
5.2-5 ..... Revision UMSS-07A
5.2-6 ..... Revision UMSS-07A
5.2-7 ..... Revision UMSS-07A
5.2-8 ..... Revision UMSS-06A
5.2-9 ..... Revision UMSS-06A
5.2-10 ..... Revision UMSS-06A
5.2-11 ..... Revision UMSS-06A
5.2-12 ..... Revision UMSS-06A
5.2-13 ..... Revision UMSS-06A
5.2-14 ..... Revision UMSS-06A
5.2-15 ..... Revision UMSS-06A
5.2-16 ..... Revision UMSS-06A
5.2-17 ..... Revision UMSS-06A
5.2-18 ..... Revision UMSS-06A
5.2-19 ..... Revision UMSS-06A
5.2-20 ..... Revision UMSS-06A
5.2-21 ..... Revision UMSS-06A
5.2-22 ..... Revision UMSS-06A
5.2-23 ..... Revision UMSS-06A
5.2-24 ..... Revision UMSS-06A
5.2-25 ..... Revision UMSS-06A
5.2-26 ..... Revision UMSS-06A
5.2-27 ..... Revision UMSS-06A
5.2-28 ..... Revision UMSS-06A
5.2-29 ..... Revision UMSS-06A
5.2-30 ..... Revision UMSS-06A
5.2-31 ..... Revision UMSS-06A
5.2-32 ..... Revision UMSS-06A
5.2-33 ..... Revision UMSS-06A
5.2-34 ..... Revision UMSS-06A
5.2-35 ..... Revision UMSS-06A
5.2-36 ..... Revision UMSS-06A
5.3-1 ..... Revision 3
5.3-2 ..... Revision 3
5.3-3 ..... Revision 3
5.3-4 ..... Revision 3
5.3-5 ..... Revision 3
5.3-6 ..... Revision 3
5.3-7 ..... Revision 3
5.3-8 ..... Revision 3

List of Effective Pages (continued)

5.3-9 ..... Revision 3
5.3-10 ..... Revision 3
5.3-11 ..... Revision 4
5.3-12 ..... Revision 4
5.3-13 ..... Revision 3
5.3-14 ..... Revision 3
5.3-15 ..... Revision 3
5.3-16 ..... Revision 3
5.3-17 ..... Revision 3
5.3-18 ..... Revision 3
5.3-19 ..... Revision 3
5.3-20 ..... Revision 3
5.3-21 ..... Revision 3
5.3-22 ..... Revision 4
5.3-23 ..... Revision 4
5.3-24 ..... Revision 3
5.3-25 ..... Revision 4
5.3-26 ..... Revision 4
5.3-27 ..... Revision 3
5.3-28 ..... Revision 3
5.3-29 ..... Revision 3
5.3-30 ..... Revision 3
5.3-31 ..... Revision 3
5.3-32 ..... Revision 3
5.4-1 ..... Revision 3
5.4-2 ..... Revision 3
5.4-3 ..... Revision 3
5.4-4 ..... Revision 3
5.4-5 ..... Revision 3
5.4-6 ..... Revision 3
5.4-7 ..... Revision 3
5.4-8 ..... Revision 3
5.4-9 ..... Revision 3
5.4-10 ..... Revision 3
5.4-11 ..... Revision 3
5.4-12 ..... Revision 3
5.4-13 ..... Revision 3
5.4-14 ..... Revision 3
5.4-15 ..... Revision 3
5.4-16 ..... Revision 3
5.4-17 ..... Revision 3
5.4-18 ..... Revision 3
5.4-19 ..... Revision 3
5.4-20 ..... Revision 3
5.4-21 ..... Revision 3
5.4-22 ..... Revision 3
5.4-23 ..... Revision 3
5.4-24 ..... Revision 3
5.4-25 ..... Revision 3
5.4-26 ..... Revision 3
5.4-27 ..... Revision 3
5.5-1 ..... Revision UMSS-06A
5.5-2 ..... Revision 3
5.5-3 ..... Revision 3
5.5-4 ..... Revision 3
5.5-5 ..... Revision 3
5.5-6 ..... Revision 3
5.5-7 ..... Revision 3
5.5-8 ..... Revision UMSS-06A
5.5-9 ..... Revision UMSS-06A
5.5-10 ..... Revision UMSS-06A
5.6-1 ..... Amendment 1
5.6.1-1 ..... Revision 4
5.6.1-2 ..... Amendment 1
5.6.1-3 ..... Revision 4
5.6.1-4 ..... Amendment 1
5.6.1-5 ..... Revision 4
5.6.1-6 ..... Revision 3
5.6.1-7 ..... Revision 3
5.6.1-8 ..... Revision 3

List of Effective Pages (continued)

5.6.1-9 ..... Amendment 1
5.6.1-10 ..... Amendment 1
5.6.1-11 ..... Revision UMSS-07A
5.6.1-12 ..... Revision UMSS-07A
5.6.1-13 ..... Amendment 2
5.6.1-14 ..... Amendment 2
5.6.1-15 ..... Amendment 2
5.6.1-16 ..... Amendment 2
5.6.1-17 ..... Amendment 2
5.6.1-18 ..... Amendment 2
5.6.1-19 ..... Amendment 2
5.6.1-20 ..... Amendment 2
5.6.1-21 ..... Amendment 2
5.6.1-22 ..... Amendment 2
5.6.1-23 ..... Revision 3
5.6.1-24 ..... Revision 3
5.6.1-25 ..... Amendment 2
5.6.1-26 ..... Revision 3
5.6.1-27 ..... Revision 3
5.6.1-28 ..... Amendment 2
5.6.1-29 ..... Amendment 2
5.6.1-30 ..... Amendment 2
5.6.1-31 ..... Amendment 2
5.6.1-32 ..... Amendment 2
5.6.1-33 ..... Amendment 2
5.6.1-34 ..... Amendment 2
5.7-1 ..... Revision 0
5.7-2 ..... Revision 0
5.7-3 ..... Revision UMSS-06A

Chapter 6

6-i ..... Revision 3
6-ii ..... Revision UMSS-07A
6-iii ..... Revision 3
6-iv ..... Revision 3
6-v ..... Revision 3
6-vi ..... Revision 3
6-vii ..... Revision 3
6.1-1 ..... Revision UMSS-07A
6.1-2 ..... Revision UMSS-07A
6.1-3 ..... Revision 3
6.1-4 ..... Revision 3
6.1-5 ..... Revision 3
6.1-6 ..... Revision 3
6.2-1 ..... Revision 5
6.2-2 ..... Revision 3
6.2-3 ..... Revision 3
6.3-1 ..... Revision 3
6.3-2 ..... Revision 3
6.3-3 ..... Revision 5
6.3-4 ..... Revision 3
6.3-5 ..... Revision 3
6.3-6 ..... Revision 3
6.3-7 ..... Revision 4
6.3-8 ..... Revision 4
6.3-9 ..... Revision 3
6.3-10 ..... Revision 3
6.3-11 ..... Revision 3
6.3-12 ..... Revision 3
6.3-13 ..... Revision 3
6.3-14 ..... Revision 3
6.3-15 ..... Revision 3
6.3-16 ..... Revision 3
6.3-17 ..... Revision 3
6.3-18 ..... Revision 3
6.4-1 ..... Revision 4
6.4-2 ..... Revision 3
6.4-3 ..... Revision 3
6.4-4 ..... Revision 3
6.4-5 ..... Revision 3

List of Effective Pages (continued)

6.4-6 ..... Revision 3
6.4-7 ..... Revision 3
6.4-8 ..... Revision 3
6.4-9 ..... Revision 3
6.4-10 ..... Revision 3
6.4-11 ..... Revision 3
6.4-12 ..... Revision 3
6.4-13 ..... Revision 3
6.4-14 ..... Revision 3
6.4-15 ..... Revision 3
6.4-16 ..... Revision 3
6.4-17 ..... Revision 0
6.4-18 ..... Revision 3
6.4-19 ..... Revision 3
6.4-20 ..... Revision 3
6.4-21 ..... Revision 3
6.4-22 ..... Revision 3
6.4-23 ..... Revision 3
6.4-24 ..... Revision 3
6.4-25 ..... Revision 3
6.4-26 ..... Revision 3
6.4-27 ..... Revision 3
6.4-28 ..... Revision 3
6.4-29 ..... Revision 3
6.4-30 ..... Revision 3
6.4-31 ..... Revision 3
6.4-32 ..... Revision 3
6.4-33 ..... Revision 3
6.4-34 ..... Revision 3
6.4-35 ..... Revision 3
6.4-36 ..... Revision 3
6.4-37 ..... Revision 3
6.4-38 ..... Revision 3
6.4-39 ..... Revision 3
6.4-40 ..... Revision 3
6.5-1 ..... Revision 3
6.5-2 ..... Revision 3
6.5-3 ..... Revision 3
6.5-4 ..... Revision 3
6.5-5 ..... Revision 3
6.5-6 ..... Revision 3
6.5-7 ..... Revision 3
6.5-8 ..... Revision 3
6.5-9 ..... Revision 3
6.5-10 ..... Revision 3
6.5-11 ..... Revision 3
6.5-12 ..... Revision 3
6.5-13 ..... Revision 3
6.5-14 ..... Revision 3
6.5-15 ..... Revision 3
6.5-16 ..... Revision 3
6.5-17 ..... Revision 3
6.5-18 ..... Revision 3
6.5-19 ..... Revision 3
6.5-20 ..... Revision 3
6.5-21 ..... Revision 3
6.5-22 ..... Revision 3
6.5-23 ..... Revision 3
6.5-24 ..... Revision 3
6.5-25 ..... Revision 3
6.5-26 ..... Revision 3
6.5-27 ..... Revision 3
6.5-28 ..... Revision 3
6.5-29 ..... Revision 3
6.5-30 ..... Revision 3
6.5-31 ..... Revision 3
6.5-32 ..... Revision 3
6.5-33 ..... Revision 3
6.5-34 ..... Revision 3
6.5-35 ..... Revision 3

List of Effective Pages (continued)

6.5-36 ..... Revision 3
6.5-37 ..... Revision 3
6.5-38 ..... Revision 3
6.5-39 ..... Revision 3
6.5-40 ..... Revision 3
6.5-41 ..... Revision 3
6.5-42 ..... Revision 3
6.5-43 ..... Revision 3
6.5-44 ..... Revision 3
6.5-45 ..... Revision 3
6.5-46 ..... Revision 3
6.5-47 ..... Revision 3
6.5-48 ..... Revision 3
6.5-49 ..... Revision 3
6.6-1 ..... Amendment 2
6.6.1-1 ..... Revision UMSS-07A
6.6.1-2 ..... Revision UMSS-07A
6.6.1-3 ..... Amendment 2
6.6.1-4 ..... Revision 4
6.6.1-5 ..... Revision UMSS-07A
6.6.1-6 ..... Revision UMSS-07A
6.6.1-7 ..... Revision UMSS-07A
6.6.1-8 ..... Revision 3
6.6.1-9 ..... Amendment 2
6.6.1-10 ..... Amendment 2
6.6.1-11 ..... Revision UMSS-07A
6.6.1-12 ..... Amendment 2
6.6.1-13 ..... Amendment 2
6.6.1-14 ..... Amendment 2
6.6.1-15 ..... Revision 4
6.6.1-16 ..... Amendment 2
6.6.1-17 ..... Amendment 2
6.6.1-18 ..... Amendment 2
6.6.1-19 ..... Amendment 2
6.6.1-20 ..... Amendment 2
6.6.1-21 ..... Amendment 2
6.6.1-22 ..... Revision 3
6.6.1-23 ..... Amendment 2
6.6.1-24 ..... Amendment 2
6.7-1 ..... Revision 0
6.7-2 ..... Revision 5
6.8-1 ..... Revision 3
6.8-2 ..... Revision 0
6.8-3 ..... Revision 0
6.8-4 ..... Revision 0
6.8-5 ..... Revision 0
6.8-6 ..... Revision 0
6.8-7 ..... Revision 0
6.8-8 ..... Revision 0
6.8-9 ..... Revision 0
6.8-10 ..... Revision 0
6.8-11 ..... Revision 0
6.8-12 ..... Revision 0
6.8-13 ..... Revision 0
6.8-14 ..... Revision 0
6.8-15 ..... Revision 0
6.8-16 ..... Revision 0
6.8-17 ..... Revision 0
6.8-18 ..... Revision 0
6.8-19 ..... Revision 0
6.8-20 ..... Revision 0
6.8-21 ..... Revision 0
6.8-22 ..... Revision 0
6.8-23 ..... Revision 0
6.8-24 ..... Revision 0
6.8-25 ..... Revision 0
6.8-26 ..... Revision 0
6.8-27 ..... Revision 0
6.8-28 ..... Revision 0
6.8-29 ..... Revision 0

List of Effective Pages (continued)

6.8-30 ..... Revision 0
6.8-31 ..... Revision 0
6.8-32 ..... Revision 0
6.8-33 ..... Revision 0
6.8-34 ..... Revision 0
6.8-35 ..... Revision 0
6.8-36 ..... Revision 0
6.8-37 ..... Revision 0
6.8-38 ..... Revision 0
6.8-39 ..... Revision 0
6.8-40 ..... Revision 0
6.8-41 ..... Revision 0
6.8-42 ..... Revision 0
6.8-43 ..... Revision 0
6.8-44 ..... Revision 0
6.8-45 ..... Revision 0
6.8-46 ..... Revision 0
6.8-47 ..... Revision 0
6.8-48 ..... Revision 0
6.8-49 ..... Revision 0
6.8-50 ..... Revision 0
6.8-51 ..... Revision 0
6.8-52 ..... Revision 3
6.8-53 ..... Revision 3
6.8-54 ..... Revision 3
6.8-55 ..... Revision 3
6.8-56 ..... Revision 3
6.8-57 ..... Revision 3
6.8-58 ..... Revision 3
6.8-59 ..... Revision 3
6.8-60 ..... Revision 3
6.8-61 ..... Revision 3
6.8-62 ..... Revision 3
6.8-63 ..... Revision 3
6.8-64 ..... Revision 3
6.8-65 ..... Revision 3
6.8-66 ..... Revision 3

Chapter 7

7-i ..... Revision 4
7-ii ..... Revision 4
7.1-1 ..... Revision UMSS-07A
7.1-2 ..... Revision UMSS-07A
7.1-3 ..... Revision 4
7.1-4 ..... Revision UMSS-07A
7.1-5 ..... Revision UMSS-07A
7.1-6 ..... Revision UMSS-07A
7.1-7 ..... Revision 4
7.1-8 ..... Revision 4
7.1-9 ..... Revision 4
7.2-1 ..... Revision 3
7.2-2 ..... Revision UMSS-06A
7.3-1 ..... Revision UMSS-07A
7.4-1 ..... Revision UMSS-07A
7.5-1 ..... Revision UMSS-07A

Chapter 8

8-i ..... Amendment 1
8-ii ..... Revision 5
8-1 ..... Revision 5
8-2 ..... Revision 5
8.1-1 ..... Revision UMSS-06A
8.1.1-1 ..... Revision UMSS-06A
8.1.1-2 ..... Revision 5
8.1.1-3 ..... Revision 4
8.1.1-4 ..... Revision UMSS-07A
8.1.1-5 ..... Revision UMSS-07A
8.1.1-6 ..... Revision UMSS-07A
8.1.1-7 ..... Revision UMSS-07A
8.1.1-8 ..... Revision 5

List of Effective Pages (continued)

8.1.1-9 ..... Revision 5
8.1.1-10 ..... Revision 5
8.1.1-11 ..... Revision 5A
8.1.2-1 ..... Revision UMSS-06A
8.1.2-2 ..... Revision UMSS-06A
8.1.3-1 ..... Revision UMSS-06A
8.1.3-2 ..... Revision UMSS-06A
8.2-1 ..... Revision 5D
8.2-2 ..... Revision 5
8.3-1 ..... Revision 4
8.3-2 ..... Revision 3
8.3-3 ..... Revision 3
8.3-4 ..... Revision 3
8.4-1 ..... Revision 0

Chapter 9

9-i ..... Revision 4
9.1-1 ..... Revision 4
9.1-2 ..... Revision 4
9.1-3 ..... Revision 4
9.1-4 ..... Revision 5
9.1-5 ..... Revision 4
9.1-6 ..... Revision UMSS-07A
9.1-7 ..... Revision UMSS-07A
9.1-8 ..... Revision 4
9.1-9 ..... Revision 4
9.1-10 ..... Revision 5D
9.2-1 ..... Revision 5D
9.2-2 ..... Revision 5D
9.2-3 ..... Revision 5D
9.3-1 ..... Revision UMSS-07A
9.3-2 ..... Revision 5

Chapter 10

10-i ..... Amendment 1
10-ii ..... Revision 3
10.1-1 ..... Revision 3
10.1-2 ..... Revision 5D
10.2-1 ..... Revision 3
10.2-2 ..... Revision 3
10.3-1 ..... Revision 3
10.3-2 ..... Revision 5D
10.3-3 ..... Revision 5D
10.3-4 ..... Revision 0
10.3-5 ..... Revision 3
10.3-6 ..... Revision 3
10.3-7 ..... Revision 0
10.3-8 ..... Revision 3
10.3-9 ..... Revision 3
10.4-1 ..... Revision 3
10.4-2 ..... Revision 3
10.4-3 ..... Revision 3
10.4-4 ..... Revision 3
10.4-5 ..... Revision 3
10.5-1 ..... Amendment 1
10.6-1 ..... Revision 0

Chapter 11

11-i ..... Amendment 1
11-ii ..... Revision 3
11-iii ..... Revision 5
11-iv ..... Revision UMSS-07A
11-v ..... Revision 3
11-vi ..... Revision 3
11-vii ..... Revision 3
11-viii ..... Revision 3
11-ix ..... Revision 3
11-x ..... Revision 3
11-1 ..... Revision 0
11.1.1-1 ..... Revision 5D

List of Effective Pages (continued)

11.1.1-2 ..... Revision 3
11.1.1-3 ..... Revision 0
11.1.1-4 ..... Revision 0
11.1.1-5 ..... Revision 0
11.1.1-6 ..... Revision 0
11.1.2-1 ..... Revision 5D
11.1.2-2 ..... Revision 0
11.1.2-3 ..... Revision 3
11.1.3-1 ..... Revision 3
11.1.3-2 ..... Revision 3
11.1.3-3 ..... Revision 3
11.1.3-4 ..... Revision 3
11.1.3-5 ..... Revision 3
11.1.3-6 ..... Revision 3
11.1.3-7 ..... Revision 3
11.1.3-8 ..... Revision 3
11.1.3-9 ..... Revision 3
11.1.3-10 ..... Revision 3
11.1.3-11 ..... Revision 3
11.1.3-12 ..... Revision 3
11.1.3-13 ..... Revision 3
11.1.3-14 ..... Revision 3
11.1.3-15 ..... Revision 3
11.1.3-16 ..... Revision 3
11.1.4-1 ..... Revision 5D
11.1.4-2 ..... Revision 5D
11.1.5-1 ..... Revision 0
11.1.5-2 ..... Revision 0
11.1.6-1 ..... Amendment 1
11.2-1 ..... Amendment 1
11.2.1-1 ..... Revision 3
11.2.1-2 ..... Revision 3
11.2.1-3 ..... Revision 3
11.2.1-4 ..... Revision 3
11.2.1-5 ..... Revision 3
11.2.1-6 ..... Revision 3
11.2.1-7 ..... Revision 3
11.2.2-1 ..... Revision UMSS-07A
11.2.3-1 ..... Revision 3
11.2.3-2 ..... Revision 0
11.2.4-1 ..... Revision 3
11.2.4-2 ..... Revision 3
11.2.4-3 ..... Revision 3
11.2.4-4 ..... Revision 3
11.2.4-5 ..... Revision 3
11.2.4-6 ..... Revision 3
11.2.4-7 ..... Revision 3
11.2.4-8 ..... Revision 3
11.2.4-9 ..... Revision 3
11.2.4-10 ..... Revision 3
11.2.4-11 ..... Revision 3
11.2.4-12 ..... Revision 0
11.2.4-13 ..... Revision 0
11.2.4-14 ..... Revision 0
11.2.4-15 ..... Revision 0
11.2.4-16 ..... Revision 0
11.2.4-17 ..... Revision 0
11.2.4-18 ..... Revision 0
11.2.4-19 ..... Revision 0
11.2.4-20 ..... Revision 0
11.2.4-21 ..... Revision 0
11.2.4-22 ..... Revision 3
11.2.4-23 ..... Revision 3
11.2.4-24 ..... Revision 3
11.2.4-25 ..... Revision 3
11.2.4-26 ..... Revision 3
11.2.4-27 ..... Revision 3
11.2.5-1 ..... Revision 0
11.2.6-1 ..... Revision 3
11.2.6-2 ..... Revision 3

List of Effective Pages (continued)

11.2.6-3 ..... Amendment 2
11.2.6-4 ..... Revision 0
11.2.6-5 ..... Revision 3
11.2.7-1 ..... Revision 5D
11.2.7-2 ..... Revision 3
11.2.8-1 ..... Revision 5
11.2.8-2 ..... Revision 0
11.2.8-3 ..... Revision 3
11.2.8-4 ..... Revision 3
11.2.8-5 ..... Revision 3
11.2.8-6 ..... Revision 5
11.2.8-7 ..... Revision 3
11.2.8-8 ..... Revision 5
11.2.8-9 ..... Revision 5
11.2.8.-10 ..... Revision 5
11.2.8-11 ..... Revision 5D
11.2.9-1 ..... Revision 0
11.2.9-2 ..... Revision 3
11.2.9-3 ..... Revision 3
11.2.9-4 ..... Revision 3
11.2.9-5 ..... Revision 5D
11.2.9-6 ..... Revision 3
11.2.9-7 ..... Revision 3
11.2.10-1 ..... Revision 0
11.2.10-2 ..... Revision 0
11.2.10-3 ..... Revision 0
11.2.10-4 ..... Revision 0
11.2.11-1 ..... Revision 0
11.2.11-2 ..... Revision 3
11.2.11-3 ..... Revision 3
11.2.11-4 ..... Revision 3
11.2.11-5 ..... Revision 0
11.2.11-6 ..... Revision 0
11.2.11-7 ..... Revision 0
11.2.11-8 ..... Revision 3
11.2.11-9 ..... Revision 3
11.2.11-10 ..... Revision 3
11.2.11-11 ..... Revision 3
11.2.11-12 ..... Revision 0
11.2.11-13 ..... Revision 0
11.2.11-14 ..... Revision 3
11.2.12-1 ..... Revision 0
11.2.12-2 ..... Revision 3
11.2.12-3 ..... Revision 3
11.2.12-4 ..... Revision 3
11.2.12-5 ..... Revision 3
11.2.12-6 ..... Revision 3
11.2.12-7 ..... Revision 3
11.2.12-8 ..... Revision 3
11.2.12-9 ..... Revision 3
11.2.12-10 ..... Revision 3
11.2.12-11 ..... Revision 0
11.2.12-12 ..... Revision 0
11.2.12-13 ..... Revision 3
11.2.12-14 ..... Revision 3
11.2.12-15 ..... Revision 3
11.2.12-16 ..... Revision 0
11.2.12-17 ..... Revision 0
11.2.12-18 ..... Revision 0
11.2.12-19 ..... Revision 3
11.2.12-20 ..... Revision 3
11.2.12-21 ..... Revision 0
11.2.12-22 ..... Revision 3
11.2.12-23 ..... Revision 0
11.2.12-24 ..... Revision 3
11.2.12-25 ..... Revision 3
11.2.12-26 ..... Revision 3
11.2.12-27 ..... Revision 3
11.2.12-28 ..... Revision 3
11.2.12-29 ..... Revision 3

List of Effective Pages (continued)

11.2.12-30 ..... Revision 3
11.2.12-31 ..... Revision 3
11.2.12-32 ..... Revision 3
11.2.12-33 ..... Revision 3
11.2.12-34 ..... Revision 3
11.2.12-35 ..... Revision 3
11.2.12-36 ..... Revision 3
11.2.12-37 ..... Revision 3
11.2.12-38 ..... Revision 3
11.2.12-39 ..... Revision 3
11.2.12-40 ..... Revision 3
11.2.12-41 ..... Revision 3
11.2.12-42 ..... Revision 3
11.2.12-43 ..... Revision 3
11.2.12-44 ..... Revision 3
11.2.12-45 ..... Revision 3
11.2.12-46 ..... Revision 3
11.2.12-47 ..... Revision 3
11.2.12-48 ..... Revision 3
11.2.12-49 ..... Revision 3
11.2.12-50 ..... Revision 3
11.2.12-51 ..... Revision 3
11.2.12-52 ..... Revision 3
11.2.12-53 ..... Revision 3
11.2.12-54 ..... Revision 3
11.2.12-55 ..... Revision 3
11.2.12-56 ..... Revision 3
11.2.12-57 ..... Revision 3
11.2.12-58 ..... Revision 3
11.2.12-59 ..... Revision 3
11.2.12-60 ..... Revision 3
11.2.12-61 ..... Revision 3
11.2.12-62 ..... Revision 3
11.2.12-63 ..... Revision 3
11.2.12-64 ..... Revision 3
11.2.12-65 ..... Revision 3
11.2.12-66 ..... Revision 3
11.2.12-67 ..... Revision 3
11.2.12-68 ..... Revision 3
11.2.12-69 ..... Revision 3
11.2.12-70 ..... Revision 3
11.2.12-71 ..... Revision 3
11.2.13-1 ..... Revision 5D
11.2.13-2 ..... Revision 5D
11.2.13-3 ..... Revision 0
11.2.14-1 ..... Revision 3
11.2.14-2 ..... Revision 3
11.2.15-1 ..... Revision 3
11.2.15-2 ..... Revision 3
11.2.15-3 ..... Amendment 1
11.2.15-4 ..... Amendment 2
11.2.15-5 ..... Revision UMSS-07A
11.2.15-6 ..... Revision UMSS-07A
11.2.15-7 ..... Amendment 1
11.2.15-8 ..... Amendment 1
11.2.15-9 ..... Amendment 1
11.2.15-10 ..... Amendment 1
11.2.15-11 ..... Amendment 1
11.2.15-12 ..... Amendment 1
11.2.15-13 ..... Amendment 1
11.2.15-14 ..... Revision 3
11.2.15-15 ..... Revision 3
11.2.15-16 ..... Revision 3
11.2.15-17 ..... Revision 3
11.2.15-18 ..... Amendment 1
11.2.15-19 ..... Amendment 1
11.2.15-20 ..... Amendment 1
11.2.15-21 ..... Amendment 1
11.2.15-22 ..... Amendment 1
11.2.15-23 ..... Amendment 2

List of Effective Pages (continued)

11.2.15-24 ..... Amendment 2
11.2.15-25 ..... Revision 4
11.2.15-26 ..... Amendment 2
11.2.15-27 ..... Amendment 1
11.2.15-28 ..... Amendment 2
11.2.15-29 ..... Revision 4
11.2.15-30 ..... Revision 3
11.2.15-31 ..... Revision 3
11.2.15-32 ..... Revision 4
11.2.15-33 ..... Amendment 2
11.2.15-34 ..... Amendment 2
11.2.15-35 ..... Amendment 2
11.2.16-1 ..... Revision UMSS-07A
11.2.16-2 ..... Revision UMSS-07A
11.2.16-3 ..... Revision UMSS-06A
11.2.16-4 ..... Revision UMSS-07A
11.2.16-5 ..... Revision UMSS-06A
11.2.16-6 ..... Revision UMSS-07A
11.2.16-7 ..... Revision UMSS-07A
11.2.16-8 ..... Revision UMSS-07A
11.2.16-9 ..... Revision UMSS-07A
11.2.16-10 ..... Revision UMSS-07A
11.3-1 ..... Revision 3
11.3-2 ..... Revision 0
11.3-3 ..... Revision 0
11.3-4 ..... Revision 3
11.3-5 ..... Revision UMSS-07A

Chapter 12

12-i ..... Amendment 1
12-ii ..... Amendment 1
12-1 ..... Revision 5
12-2 ..... Revision UMSS-07A
12-3 ..... Revision UMSS-07A
12-4 ..... Revision 3
12A-1 ..... Revision 3
12A-2 ..... Revision 3
12B-1 ..... Revision 3
12B-2 ..... Revision 3
12C-1 ..... Revision 0
12C-2 ..... Revision UMSS-07A
12C1-1 ..... Revision 3
12C2-1 ..... Revision UMSS-07A
12C2-2 ..... Revision 3
12C3-1 ..... Revision 0
12C3-2 ..... Revision 0
12C3-3 ..... Revision 0
12C3-4 ..... Revision 0
12C3-5 ..... Revision 0
12C3-6 ..... Revision 0
12C3-7 ..... Revision 0
12C3-8 ..... Revision 0
12C3-9 ..... Revision UMSS-07A
12C3-10 ..... Revision UMSS-07A
12C3-11 ..... Revision UMSS-07A
12C3-12 ..... Revision UMSS-07A
12C3-13 ..... Revision UMSS-07A
12C3-14 ..... Revision UMSS-07A
12C3-15 ..... Revision UMSS-07A
12C3-16 ..... Revision UMSS-07A
12C3-17 ..... Revision UMSS-07A
12C3-18 ..... Revision UMSS-07A
12C3-19 ..... Revision UMSS-07A
12C3-20 ..... Revision UMSS-07A
12C3-21 ..... Revision UMSS-07A
12C3-22 ..... Revision UMSS-07A
12C3-23 ..... Revision UMSS-07A
12C3-24 ..... Revision UMSS-07A
12C3-25 ..... Revision UMSS-07A
12C3-26 ..... Revision UMSS-07A

List of Effective Pages (continued)

12C3-27 ..... Revision UMSS-07A
12C3-28 ..... Revision UMSS-07A
12C3-29 ..... Revision UMSS-07A
12C3-30 ..... RevisionUMSS-07A
12C3-31 ..... Revision UMSS-07A
12C3-32 ..... Revision UMSS-07A
12C3-33 ..... Revision UMSS-07A
12C3-34 ..... Revision UMSS-07A
12C3-35 ..... Revision UMSS-07A
12C3-36 ..... Revision UMSS-07A
12C3-37 ..... Revision UMSS-07A
12C3-38 ..... Revision UMSS-07A
12C3-39 ..... Revision UMSS-07A
12C3-40 ..... Revision UMSS-07A

Chapter 13

13-i ..... Revision 0
13-ii ..... Revision 0
13.1-1 ..... Revision 0
13.1-2 ..... Revision 0
13.2-1 ..... Revision 0
13.2-2 ..... Revision 0
13.2-3 ..... Revision 0
13.2-4 ..... Revision 0
13.2-5 ..... Revision 0
13.2-6 ..... Revision 0
13.2-7 ..... Revision 0
13.2-8 ..... Revision 3
13.3-1 ..... Revision 3

Chapter 1

Table 1-1 Terminology

Universal Storage System	The storage component of the Universal MPC System (UMS®) designed by NAC for the storage and transportation of spent nuclear fuel.
Universal Transport Cask	The packaging consisting of a Universal Transport Cask body with a closure lid and energy-absorbing impact limiters. The Universal Transport Cask is used to transport a Transportable Storage Canister containing spent fuel. The cask body provides the primary containment boundary during transport.
Air Pad Rig Set (Air Pallet)	A device used to lift the Vertical Concrete Cask by using high volume air.
Assembly Defect	Any change in the physical as-built condition of the assembly, with the exception of normal in-reactor changes such as elongation from irradiation growth or assembly bow. Example of assembly defects include: (a) missing rods, (b) broken or missing grids or grid straps (spacer), and (c) missing or broken grid springs, etc. An assembly with a defect is damaged only if it cannot meet its fuel-specific and system-related functions.
Breached Spent Fuel Rod	Spent fuel with cladding defects that permit the release of gas from the interior of the fuel rod. A fuel rod breach may be a minor defect (i.e., hairline crack or pinhole), allowing the rod to be classified as undamaged, or be a gross breach requiring a damaged fuel classification.
Confinement System	The components of the Transportable Storage Canister intended to retain the radioactive material during storage.
Consolidated Fuel	A nonstandard fuel configuration in which the individual undamaged fuel rods from one or more fuel assemblies are placed in a single container or a lattice structure that is dimensionally similar to a fuel assembly. Consolidated Fuel is stored in a Maine Yankee Fuel Can.
Contents	Twenty-four PWR fuel assemblies, or fifty-six BWR fuel assemblies. The fuel assemblies may be configured as Site Specific Fuel. The fuel assemblies are contained in a Transportable Storage Canister.

Table 1-1 Terminology (Continued)

Damaged Fuel

Spent nuclear fuel (SNF) that cannot fulfill its fuel-specific or system-related function. Damaged fuel must be placed in a Maine Yankee Fuel Can unless otherwise noted. Spent fuel is classified as damaged under the following conditions.

1) There is visible deformation of the rods in the SNF assembly.

   Note: This is not referring to the uniform bowing that occurs in the reactor; this refers to bowing that significantly opens up the lattice spacing.

2) Individual fuel rods are missing from the assembly and the missing rods are not replaced by dummy rods that displace a volume equal to, or greater than, the original fuel rods.

   Note: Maine Yankee fuel assemblies with missing fuel rods, not replaced by filler rods, do not require placement into a Maine Yankee Fuel Can, but must be preferentially loaded.

3) The SNF assembly has missing, displaced or damaged structural components such that either:

   - Radiological and/or criticality safety is adversely affected (e.g., significantly changed rod pitch); or
   - The assembly cannot be handled by normal means (i.e., crane and grapple).

   Note: PWR assemblies with the following structural defects meet UMS system-related functional requirements and are, therefore, classified as undamaged.

   - Grid, grid strap, and/or grid strap spring damage in PWR assemblies such that the unsupported length of the fuel rod does not exceed 60 inches.

Table 1-1 Terminology (Continued)

Damaged Fuel (cont'd)	4) Reactor operating records (or other records) indicate that the SNF assembly contains fuel rods with gross breaches. Note: Breached fuel rods with minor cladding defects (i.e, pinhole leaks or hairline cracks that will not permit significant release of particulate matter from the spent fuel rod) meet UMS system-related functional requirements and are, therefore, classified as undamaged.
Fuel Basket (Basket)	The structure located within the Transportable Storage Canister that provides structural support, criticality control, and primary heat transfer paths for the fuel assemblies.
- Support Disk	The primary lateral load-bearing component of the fuel basket. The PWR support disk is a circular stainless steel plate with 24 square holes machined in a symmetrical pattern. The BWR support disk is a circular carbon steel plate with 56 square holes machined in a symmetrical pattern. Each square hole is a location for a fuel tube.
- Heat Transfer Disk	A circular aluminum plate with 24 (PWR basket) or 56 (BWR basket) square holes machined in a symmetrical pattern. The heat transfer disk enhances heat transfer in the fuel basket.
- Fuel Tube	A stainless steel tube having a square cross-section. One fuel tube is inserted through each square hole in the support disks and heat transfer disks. Fuel assemblies are loaded into the fuel tubes. A fuel tube may have neutron absorber material enclosed by a stainless steel sheet on one or more of its external faces, depending on fuel type and the position of the fuel tube in the basket.
- Tie Rod	A stainless steel rod used to align, retain, and support the support disks and the heat transfer disks in the fuel basket structure. The tie rods extend from the top weldment to the bottom weldment.
- Spacer	Installed on the tie rod between the support disks (BWR only) or between the support disks and top and bottom weldments (BWR and PWR) to properly position the disks and provide axial support for the support disks.

Table 1-1 Terminology (Continued)

- Split Spacer	Spacers installed on the tie rod between the support disks and the heat transfer disks to properly position the disks and provide axial support for the support disks and the heat transfer disks.
Grossly Beached Spent Fuel Rod	A breach in the spent fuel cladding that is larger than a pinhole or hairline crack. A gross cladding breach may be established by visual examination with the capability to determine if the fuel pellet can be seen through the cladding, or through a review of reactor operating records indicating the presence of heavy metal isotopes.
Heavy Haul Trailer	The trailer used to transport the empty or loaded Vertical Concrete Cask.
High Burnup Fuel	A fuel assembly meeting the definition of a standard fuel assembly with an assembly average burnup between 45,000 and 60,000 MWd/MTU. Maximum peak average rod burnup is limited to 62,500 MWd/MTU.
Intact Fuel (Assembly or Rod)	Any fuel that can fulfill all fuel-specific and system-related functions and that is not breached.
Maine Yankee Fuel Can	A specially designed stainless steel screened can sized to hold an undamaged fuel assembly, consolidated fuel, or damaged fuel. The can screens permit draining and drying, while precluding the release of gross particulates into the canister cavity. The Maine Yankee Fuel Can may only be loaded in a Class 1 Canister.
Margin of Safety	An analytically determined value defined as the "factor of safety" minus 1. Factor of safety is also analytically determined, and is defined as the allowable stress or displacement of a material divided by its actual (calculated) value.
NS-4-FR or NS-3	Solid hydrogenous materials with neutron absorption capabilities.

Table 1-1 Terminology (Continued)

Site Specific Fuel	Spent fuel configurations that are unique to a site or reactor due to the addition of other components or reconfiguration of the fuel assembly at the site. It includes fuel assemblies, which hold nonfuel-bearing components, such as control components or instrument and plug thimbles, or which are modified as required by expediency in reactor operations, research and development or testing. Modification may consist of individual fuel rod removal, fuel rod replacement of similar or dissimilar material or enrichment, the installation, removal or replacement of burnable poison rods, or containerizing damaged (failed) fuel. Site specific fuel includes irradiated fuel assemblies designed with variable enrichments and/or axial blankets, fuel that is consolidated and fuel that exceeds design basis fuel parameters.
Shield Lid	A thick stainless steel disk that is located directly above the fuel basket. The shield lid comprises the first part of a double-welded closure system for the Transportable Storage Canister. The shield lid provides a containment/confinement boundary for storage and shielding for the contents.
- Drain Port	A penetration located in the shield lid to permit draining of the canister cavity.
- Vent Port	A penetration located in the shield lid to aid in draining and in vacuum drying and backfilling the canister with helium.
- Port Cover	The stainless steel covers that close the vent and drain ports, and that are welded in place following draining, drying, and backfilling operations.
-Quick Disconnect	The valved nipple used in the vent and drain ports to facilitate operations.

Table 1-1 Terminology (Continued)

Standard Fuel	Irradiated fuel assemblies with a burnup less than, or equal to, 45,000 MWd/MTU and having the same configuration as when originally fabricated consisting generally of the end fittings, fuel rods, guide tubes, and integral hardware. For PWR fuel, a flow mixer (thimble plug), an in-core instrument thimble, a burnable poison rod insert, or a solid stainless steel rod insert is considered to be a component of standard fuel. For BWR fuel, the channel is considered to be integral hardware. The design basis fuel characteristics and analysis are based on the standard fuel configuration.
Structural Lid	A thick stainless steel disk that is positioned on top of the shield lid and welded to the canister. The structural lid is the second part of a double-welded closure system for the Transportable Storage Canister. The structural lid provides a confinement boundary for storage, shielding for the contents, and canister lifting/handling capability.
Transfer Adapter	A carbon steel plate assembly that is positioned on to the top of the transport or concrete cask to facilitate installation and alignment of the transfer cask. It also provides the operating mechanism for the transfer cask bottom doors.
Transfer Cask	A shielded lifting device for handling of the Transportable Storage Canister during loading of spent fuel, canister closure operations, and transfer of the canister into or out of the Vertical Concrete Cask during storage, or into or out of the Universal Transport Cask during transportation. The transfer cask incorporates bottom doors that permit the vertical loading of the storage and transport casks. The transfer cask is provided in either the standard or the advanced configuration. The advanced configuration has a higher weight capacity.
- **Transfer Cask Lifting Trunnions**	Four low alloy steel trunnions used to lift and move the transfer cask in a vertical orientation.

Table 1-1 Terminology (Continued)

Transportable Storage Canister (Canister)	The stainless steel cylindrical shell, bottom end plate, shield lid, and structural lid that cont ain the fuel basket structure and the contents.
Undamaged Fuel	Spent nuclear fuel that can meet all fuel specific and system-related functions. UNDAMAGED FUEL is spent nuclear fuel that is not DAMAGED FUEL, as defined herein, and does not contain assembly structural defects that adversely affect radiological and/or criticality safety. As such, UNDAMAGED FUEL may contain: a) Breached spent fuel rods (i.e, rods with minor defects up to hairline cracks or pinholes) but can not contain grossly breached fuel rods; b) Grid, grid strap, and/or grid spring damage in PWR assemblies, provided that the unsupported length of the fuel rod does not exceed 60 inches.
Vertical Concrete Cask (Concrete Cask)	A concrete cylinder that contains the Transportable Storage Canister during storage. The Vertical Concrete Cask is formed around a steel inner liner and base and is closed by a shield plug and lid.
- Shield Plug	A thick carbon steel plug, which also contains a neutron shield material, installed in the top end of the Vertical Concrete Cask to reduce skyshine radiation.
- Lid	A thick carbon steel plate that serves as the bolted closure for the Vertical Concrete Cask. The lid precludes access to the canister and provides additional radiation shielding.
- Liner	A thick carbon steel shell that forms the annulus of the concrete cask. The liner serves as the inner form during concrete pouring and provides radiation shielding of the canister contents.
- Base	A carbon steel weldment that contains the air inlets, the concrete cask jacking points and the pedestal that supports the canister inside of the concrete cask.

THIS PAGE INTENTIONALLY LEFT BLANK

canister with helium. After the shield lid is welded in place, it is pressure and leakage tested to ensure no credible leakage of the confinement boundary during storage.

The structural lid is a 3-inch thick Type 304L stainless steel disk positioned on top of the shield lid and welded to the shell after the shield lid is welded in place and the canister is drained, dried, and backfilled with helium. Removable lifting fixtures, installed in the structural lid, are used to lift and lower the loaded canister.

The Transportable Storage Canister is designed to the requirements of the ASME Boiler and Pressure Vessel Code (ASME Code), Section III, Division I, Subsection NB [8]. It is fabricated and assembled in accordance with the requirements of Subsection NB to the maximum extent practicable, consistent with the conditions of use. Exceptions to the ASME Code are noted in Table B3-1 in Appendix B.

A summary of the canister fabrication specifications is presented in Table 1.2-3. As shown in that table, the field installed welds joining the shield and structural lids to the canister shell are not full penetration welds. The shield lid weld is dye penetrant inspected on the root and final cover pass. The structural lid weld is either ultrasonically inspected when completed or it is dye penetrant inspected on the root and final cover passes and on each 3/8-inch intermediate layer. These inspections assure weld integrity in accordance with the requirements of ASME Code Section V, Articles 5 and 6 [9], as appropriate. The weld joining the shield lid to the canister shell is pressure tested and leak tested as described in Section 8.1.1. The structural and shield lid welds are made with the aid of a backing ring (also called a spacer ring) or shims, which cannot be removed when the weld is completed. There are no detrimental effects that result from the presence of the spacer ring or shims, and no structural credit is taken for their presence.

The design of the transportable storage canister and its fabrication controls would allow the canister to be ASME Code stamped in accordance with the ASME Code Section III, if desired.

1.2.1.2 Fuel Baskets

The transportable storage canister contains a fuel basket which positions and supports the stored fuel in normal, off-normal and accident conditions. As described in the following sections, the design of the basket is similar for the PWR and BWR configurations. The fuel basket for each fuel type is designed and fabricated to the requirements of the ASME Code, Section III, Division I, Subsection NG [10]. However, the basket assembly is not Code stamped and no reports

relative to Code stamping are prepared. Consequently, an exception is taken to Article NG-8000, Nameplates, Stamping and Reports.

1.2.1.2.1 PWR Fuel Basket

The PWR fuel basket is contained within the transportable storage canister. It is constructed of stainless steel, but incorporates aluminum disks for enhanced heat transfer. The fuel basket design is a right-circular cylinder configuration with square fuel tubes laterally supported by a series of support disks. The basket design parameters for the storage of the three classes of PWR fuel are provided in Table 1.2-4. The Class 1, 2 or 3 fuel baskets incorporate 30, 32 or 34 support disks, respectively. The disks are retained by a top nut and supported by spacers on tie rods at eight locations. The top nut is torqued at installation to provide a solid load path in compression between the support disks. The support disks are fabricated of SA-693, Type 630, 17-4 PH stainless steel. The disks are spaced axially at 4.92 inches center-to-center and contain square holes for the fuel tubes.

The top and bottom weldments are fabricated from Type 304 stainless steel and are geometrically similar to the support disks. The tie rods and top nuts are fabricated from SA-479, Type 304 stainless steel. The top nut is fabricated from a 3.5-in.-diameter bar, and the spacers are fabricated from a 2.5-in. pipe XXS, Type 304 stainless steel. The fuel tubes are fabricated from A-240, Type 304 stainless steel and support an enclosed neutron absorber sheet on each of the four sides. The neutron absorber provides criticality control in the basket. No credit is taken for the fuel tubes for structural strength of the basket or support of the fuel assemblies.

Each PWR fuel basket has a capacity of 24 PWR fuel assemblies in an aligned configuration in 8.80-inch square fuel tubes. The holes in the top weldment are 8.75-inch square. The holes in the bottom weldment are 8.65-inch square. The basket design traps the fuel tube between the top and bottom weldments, thereby preventing axial movement of the fuel tube. The support disk configuration includes webs between the fuel tubes with variable widths depending on location.

The PWR basket design incorporates Type 6061-T651 aluminum alloy heat transfer disks to enhance heat transfer in the basket. Twenty-nine heat transfer disks are contained in the Class 1 basket. Class 2 and 3 fuel baskets contain 31 and 33 disks, respectively. The heat transfer disks are spaced and supported by the tie rods and spacers, which also support and locate the support disks. The heat transfer disks, located at the center of the axial spacing between the support disks, are sized to eliminate contact with the canister inner shell due to differential thermal expansion.

1.2.1.5 Auxiliary Equipment

This section presents a brief description of the principal auxiliary equipment needed to operate the Universal Storage System in accordance with its design.

1.2.1.5.1 Transfer Adapter

The transfer adapter is a carbon steel table that is positioned on the top of the Vertical Concrete Cask or the Universal Transport Cask and mates the transfer cask to either of those casks. It has a large center hole that allows the Transportable Storage Canister to be raised or lowered through the plate into or out of the transfer cask. Rails are incorporated in the transfer adapter to guide and support the bottom shield doors of the transfer cask when they are in the open position. The transfer adapter also supports the hydraulic system and the actuators that open and close the transfer cask bottom doors.

1.2.1.5.2 Air Pad Rig Set

The air pad rig set (air pad set) is a commercially available device, sometimes referred to as an air pallet. When inflated, the air pad rig set lifts the concrete cask by using high volume air flow. The air pads employ a continuous, regulated air flow and a control system that equalizes lifting heights of the four air pads by regulating compressed air flow to each of the air pads. The compressed air supply creates an air film between the inflated air cushion and the supporting surface. The thin film of air allows the concrete cask to be lifted and moved. Once lifted, the cask can be moved by a suitable towing vehicle, such as a commercial tug or forklift.

1.2.1.5.3 Automatic Welding System

The automatic welding system consists of commercially available components with a customized weld head. The components include a welding machine, a remote pendant, a carriage, a drive motor and welding wire motor, and the weld head. The system is designed to make at least one weld pass automatically around the canister after its weld tip is manually positioned at the proper location. As a result, radiation exposure during canister closure is much less than would be incurred from manual welding.

1.2.1.5.4 Draining and Drying System

The draining and drying system consists of a suction pump and a vacuum pump. The suction pump is used to remove free water from the canister cavity. The vacuum pump is a two-stage unit for drying the interior of the canister. The first stage is a large capacity or "roughing" pump intended to remove free water not removed by the suction pump. The second stage is a vacuum pump used to evacuate the canister interior of the small amounts of remaining moisture and establish the vacuum condition.

1.2.1.5.5 Lifting Jacks

Hydraulic jacks are installed at jacking pads in the air inlets at the bottom of the concrete cask to lift the cask so that the air pad set can be installed or removed. Four hydraulic jacks are provided, along with a control panel, an electric hydraulic oil pump, an oil reservoir tank and all hydraulic lines and fittings. The jacks are used to lift the cask approximately three inches. This permits installation of the air pad rig set under the concrete cask.

1.2.1.5.6 Heavy-Haul Trailer

The heavy-haul trailer is used to move the Vertical Concrete Cask. A special trailer is designed for transport of the empty or loaded concrete cask. The design incorporates a jacking system that facilitates raising the concrete cask to allow installation of the air pad set used to move the cask onto the storage pad. The trailer incorporates both reinforcing to increase the trailer load-bearing area and design features that reduce its turning radius. However, any commercial double-drop-frame trailer having a deck height approximately matching that of the storage pad could be used.

1.2.1.5.7 Transporter

A cask transporter may also be used to move an empty or loaded Vertical Concrete Cask. The typical design incorporates a vertical lifting system that raises the concrete cask using the Vertical Concrete Cask lifting lugs. The transporter may be a self-propelled, towed or pushed design.

1.2.1.5.8 Helium Leak Test Equipment

A helium leak detector and leak test fixtures are required to verify the integrity of the welds of the canister shield lid. The helium leak detector is the mass spectrometer type.

- Load the selected spent fuel assemblies into the canister and set the shield lid.
- Raise the transfer cask from the pool. Decontaminate the transfer cask exterior as it clears the pool surface. Drain the annulus. Place the transfer cask in the decontamination area.

  Note: As an alternative, some sites may choose to perform welding operations for closure of the canister in a cask loading pit with water around the canister (below the trunnions) and in the annulus. This alternative provides additional shielding during the closure operation.
- Weld the shield lid to the canister shell. Inspect and pressure test the weld. Drain the pool water from the canister. Attach the vacuum system to the drain line, and operate the system to achieve a vacuum. Verify the cavity dryness.
- Reduce the vacuum pressure and backfill with helium to 1 atmosphere.
- Install the vent and drain port covers and weld them to the shield lid. Inspect the port cover welds. Helium leak check the shield lid to canister shell weld and port cover welds.
- Install the structural lid and weld it to the canister shell. Inspect the structural lid weld. Install the hoist rings and attach the canister lifting slings. (Note: Alternative canister lifting system designs may be utilized based on a site-specific analysis and evaluation.) Install the transfer adapter on the concrete cask.
- Lift the transfer cask to the top of the concrete cask and set it on the transfer adapter. (See Figure 1.2-5). Ensure that the bottom door hydraulic actuators are engaged.
- Attach the canister lifting slings or an alternative lifting device to the crane hook and lift the canister off of the transfer cask bottom doors.
- Open the bottom doors of the transfer cask.
- Lower the canister into the concrete cask (see Figure 1.2-6). Remove the canister lifting equipment.
- Remove the transfer cask and transfer adapter.
- Install the shield plug and lid on the concrete cask.
- Move the loaded concrete cask to the storage pad.
- Using the air pad rig set and a towing vehicle, move the concrete cask to its designated location on the storage pad.
- Perform initial surveillance verification of cask heat rejection capability.

During storage operations, the concrete cask operability is verified on a daily basis as specified in the Technical Specifications.

The removal operations are essentially the reverse of these steps, except that weld removal and cool down of the contents is required.

The auxiliary equipment needed to operate the Universal Storage System is described in Section 1.2.1.5. Other items required are miscellaneous hardware, connection hose and fittings, and hand tools typically found at a reactor site.

Figure 1.2-1 Vertical Concrete Cask

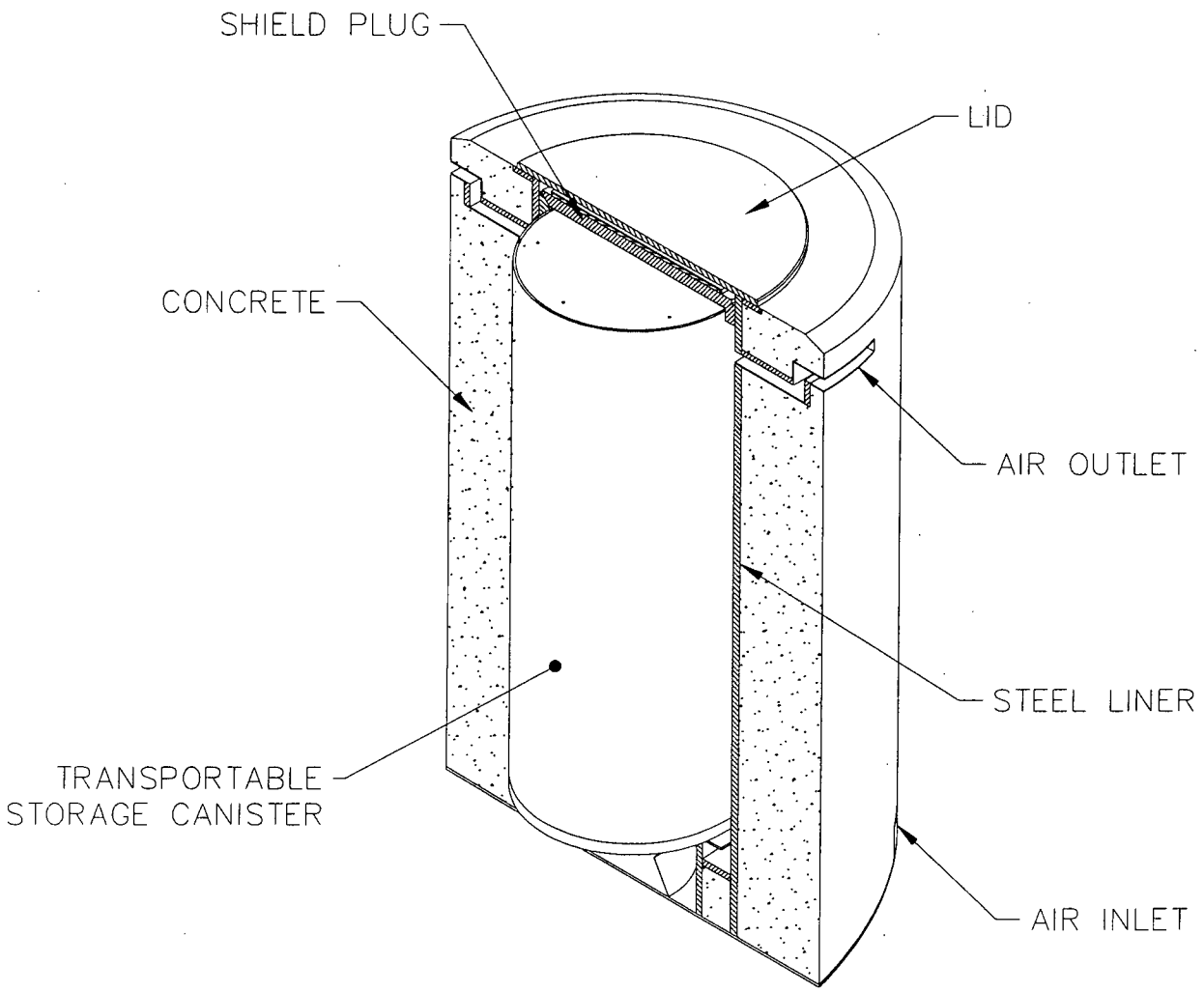

Table 1.5-1 NUREG-1536 Compliance Matrix (continued)

Chapter 6 – Criticality Evaluation		
Area	**Acceptance Criteria**	**Description of Compliance**
1. Subcriticality Margin	The multiplication factor (k_{eff}), including all biases and uncertainties at a 95-percent confidence level, should not exceed 0.95 under all credible normal, off-normal, and accident conditions.	As stated in Section 6.1, the maximum allowable multiplication factor (k_s) for the system is 0.95, including adjustment for all biases and uncertainties, as calculated in Section 6.5.
2. Double Contingency	At least two unlikely, independent, and concurrent or sequential changes to the conditions essential to criticality safety, under normal, off-normal, and accident conditions, should occur before an accidental criticality is deemed to be possible.	As stated in Section 6.1, the criticality analyses are performed for the most reactive credible configuration of the cask, at the highest enrichment, without credit for fuel burnup, and at the most reactive internal water moderator density, even though it is stated that water intrusion is not a credible event.
3. Criticality Design Features	When practicable, criticality safety of the design should be established on the basis of favorable geometry, permanent fixed neutron-absorbing materials (poisons), or both. Where solid neutron-absorbing materials are used, the design should provide for a positive means to verify their continued efficacy during the storage period.	As stated in Section 6.1, the criticality safety of the design is based on geometry and fixed neutron poisons. Recently proposed rule changes (Federal Register, June 9, 1998) include discussion clarifying the 10 CFR 72.124(b) requirement to verify the "continued efficacy" of neutron poisons as applicable only to wet storage systems, and not to dry, provided that the effectiveness of the poisons is demonstrated at the outset. Verification of the neutron absorbing materials effectiveness is discussed in Section 9.1.
4. Conservative Assumptions	Criticality safety of the cask system should not rely on use of the following credits: a. burnup of the fuel b. fuel-related burnable neutron absorbers c. more than 75 percent for fixed neutron absorbers when subject to standard acceptance tests.	Section 6.1 provides a list of conservative assumptions that are used in the criticality safety evaluation. No fuel burnup is assumed, and only 75% of the minimum ^{10}B loading on the neutron absorber plates is used. Also, no integral fuel burnable neutron absorbers, nor fission product neutron poisons, are considered in the analysis.

Table 1.5-1 NUREG-1536 Compliance Matrix (continued)

Chapter 7 – Confinement Evaluation		
Area	**Regulatory Requirement**	**Description of Compliance**
1. Description of Structures, Systems, and Components Important to Safety	The SAR must describe the confinement structures, systems, and components (SSCs) important to safety in sufficient detail to facilitate evaluation of their effectiveness. [10 CFR 72.24(c)(3) and 10 CFR 72.24(l)]	A general description of the system is provided in Section 1.2, with a detailed description of the confinement features of the system provided in Section 7.1.
2. Protection of Spent Fuel Cladding	The design must adequately protect the spent fuel cladding against degradation that might otherwise lead to gross ruptures during storage, or the fuel must be confined through other means such that fuel degradation during storage will not pose operational safety problems with respect to removal of the fuel from storage. [10 CFR 72.122(h)(1)]	As described in Sections 7.2.1 and 7.3, the integrity of the canister is maintained under normal and accident conditions. Therefore, the inert helium atmosphere is maintained in the canister, protecting the fuel cladding against degradation.
3. Redundant Sealing	The cask design must provide redundant sealing of the confinement boundary. [10 CFR 72.236(e)]	As described in Section 7.1.3.2, the canister is sealed after loading by means of a redundant closure system.
4. Monitoring of Confinement System	Storage confinement systems must allow continuous monitoring, such that the licensee will be able to determine when to take corrective action to maintain safe storage conditions. [10 CFR 72.122(h)(4) and 10 CFR 72.128(a)(1)]	The canister is a fully welded class 1 component designed and fabricated in accordance with ASME Code, Section III, Subsection NB. It is closed with a fully welded redundant closure system. Therefore, in accordance with previous regulatory guidance, monitoring of the confinement is not required.
5. Instrumentation	The design must provide instrumentation and controls to monitor systems that are important to safety over anticipated ranges for normal and off-normal operation. In addition, the applicant must identify those control systems that must remain operational under accident conditions. [10 CFR 72.122(I)]	As monitoring is not required, there is no instrumentation and controls required.
6. Release of Nuclides to the Environment	The applicant must estimate the quantity of radionuclides expected to be released annually to the environment. [10 CFR 72.24(l)(1)]	As described in Sections 7.2.1 and 7.3, there is no credible leakage from the confinement boundary during all postulated normal and accident condition events. Therefore, no release of radionuclides to the environment is credible.

Table 1.5-1 NUREG-1536 Compliance Matrix (continued)

Chapter 7 – Confinement Evaluation		
Area	**Regulatory Requirement**	**Description of Compliance**
7. Evaluation of Confinement System	The applicant must evaluate the cask and its systems important to safety, using appropriate tests or other means acceptable to the Commission, to demonstrate that they will reasonably maintain confinement of radioactive material under normal, off-normal, and credible accident conditions. [10 CFR 72.236(l) and 10 CFR 72.24(d)] In addition, SSCs important to safety must be designed to withstand the effects of credible accidents and severe natural phenomena without impairing their capability to perform safety functions. [10 CFR 72.122(b)]	The confinement system is analyzed for normal conditions in Sections 3.4.2 and 3.4.4.1, and for off-normal, and accident conditions in Sections 11.1 and 11.2, respectively. The confinement capability of the canister closure is verified by helium leakage testing of the shield lid-to-canister shell weld following fuel loading as specified in Section 8.1 and the Technical Specifications.
8. Annual Dose Limit in Effluents and Direct Radiation from an Independent Spent Fuel Storage Installation (ISFSI)	During normal operations and anticipated occurrences, the annual dose equivalent to any real individual who is located beyond the controlled area must not exceed 25 mrem to the whole body, 75 mrem to the thyroid, and 25 mrem to any other organ. [10 CFR 72.104(a)]	The site boundary dose calculations and minimum site boundary distances are presented in Section 10.4.

Table 1.5-1 NUREG-1536 Compliance Matrix (continued)

Chapter 7 – Confinement Evaluation		
Area	**Acceptance Criteria**	**Description of Compliance**
1. Redundant Sealing	The cask design must provide redundant sealing of the confinement boundary sealing surface. Typically, this means that field closures of the confinement boundary must either have double seal welds or double metallic O-ring seals.	As described in Section 7.1.3.2, the canister is sealed after loading by means of a redundant lid closure system.
2. Code Compliance	The confinement design must be consistent with the regulatory requirements, as well as the applicant's "General Design Criteria" reviewed in Chapter 2 of this SRP. The NRC staff has accepted construction of the primary confinement barrier in conformance with Section III, Subsections NB or NC, of the Boiler and Pressure Vessel (B&PV) Code promulgated by the American Society of Mechanical Engineers (ASME). (This code defines the standards for all aspects of construction, including materials, design, fabrication, examination, testing, inspection, and certification required in the manufacture and installation of components.) In such instances, the staff has relied upon Section III to define the minimum acceptable margin of safety; therefore, the applicant must fully document and completely justify any deviations from the specifications of Section III. In some cases after careful and deliberate consideration, the staff has made exceptions to this requirement.	The codes and standards utilized for the confinement system design are specified in Section 7.1.1. ASME Code, Section III, Subsection NB is utilized for the design and fabrication of the canister.
3. Maximum Allowable Leakage Rates	The applicant must specify the maximum allowed leakage rates for the total primary confinement boundary and redundant seals. (Applicants frequently display this information in tabular form, including the leakage rate of each seal.) In addition, the applicant's leakage analysis should be consistent with the principles specified in the "American National Standard for Leakage Tests on Packages for Shipment of Radioactive Materials" (ANSI N14.5). Generally, the allowable leakage rate must be evaluated for its radiological consequences and its effect on maintaining the necessary inert atmosphere within the cask.	As specified in Sections 7.2.1 and 7.3, leakage from the confinement system under normal, off-normal, and accident conditions is not credible.

Table 1.5-1 NUREG-1536 Compliance Matrix (continued)

Chapter 9 – Acceptance Test and Maintenance Program		
Area	**Regulatory Requirement**	**Description of Compliance**
1. Testing and Maintenance	a. The SAR must describe the applicant's program for preoperational testing and initial operations. [10 CFR 72.24(p)]	Section 9.1 presents the acceptance testing for the system.
	b. The cask design must permit maintenance as required. [10 CFR 72.236(g)]	Section 9.2 presents the maintenance activities for the system.
	c. Structures, systems, and components (SSCs) important to safety must be designed, fabricated, erected, tested, and maintained to quality standards commensurate with the importance to safety of the function they are intended to perform. [10 CFR 72.122(a), 10 CFR 72.122(f), 10 CFR 72.128(a)(1), and 10 CFR 72.24(c)]	The acceptance tests and maintenance activities presented in Sections 9.1 and 9.2 are performed to verify compliance with the design bases and criteria, and that the system continues to perform as designed.
	d. The applicant or licensee must establish a test program to ensure that all required testing is performed to meet applicable requirements and acceptance criteria. In addition, at least 30 days before the receipt of spent fuel, the licensee must submit to the NRC a report concerning the pre-operational test acceptance criteria and test results. [10 CFR 72.162 and 10 CFR 72.82(e)]	The testing and maintenance provided in Sections 9.1 and 9.2 are intended to be used by an ISFSI user in the development of site-specific programs.
	e. The applicant or licensee must evaluate the cask and its systems important to safety, using appropriate tests or other means acceptable to the Commission, to demonstrate that they will reasonably maintain confinement of radioactive material under normal, off-normal, and credible accident conditions. [10 CFR 72.236(l)]	The acceptance tests presented in Section 9.1 demonstrate that the system will maintain confinement of the spent fuel under normal, off-normal, and accident conditions.
	f. The applicant or licensee must inspect the cask to ascertain that there are no cracks, pinholes, uncontrolled voids, or other defects that could significantly reduce confinement effectiveness. [10 CFR 72.236(j)]	As described in Section 9.1.1, the canister is visually and non-destructively examined prior to use.
	g. The applicant must perform, and make provisions that permit the Commission to perform, tests that the Commission deems necessary or appropriate. [10 CFR 72.232(b)]	Provisions shall be made, as necessary, to facilitate additional NRC imposed testing as required.
	h. The general licensee must accurately maintain the record provided by the cask supplier showing any maintenance performed on each cask. This record must include evidence that any maintenance and testing have been conducted under an NRC-approved quality assurance (QA) program. [10 CFR 72.212(b)(8)]	Records of maintenance activities would be maintained by the ISFSI user, and thus are not applicable.
	The applicant or licensee must assure that the casks are conspicuously and durably marked with a model number, unique identification number, and the empty weight. [10 CFR 72.236(k)]	As specified in Section 9.1.8, each system is to be marked with the model number, unique cask number, empty weight, and additional information.

Table 1.5-1 NUREG-1536 Compliance Matrix (continued)

Chapter 9 – Acceptance Test and Maintenance Program		
Area	**Regulatory Requirement**	**Description of Compliance**
2. Resolution of Issues Concerning Adequacy or Reliability	The SAR must identify all SSCs important to safety for which the applicant cannot demonstrate functional adequacy and reliability through previous acceptable evidence. For this purpose, acceptable evidence may be established in any of the following ways: • prior use for the intended purpose • reference to widely accepted engineering principles • reference to performance data in related applications In addition, the SAR should include a schedule showing how the applicant or licensee will resolve any associated safety questions before the initial receipt of spent fuel. [10 CFR 72.24(i)]	As described in Sections 3.1 and 3.3, the design of the system is based on industry standard codes and standards for materials and margins of safety. The acceptance tests specified in Section 9.1 are performed to demonstrate the adequacy of each fabricated system in accordance with applied Codes and Standards. The system does not rely on any materials or design standards that lack acceptable evidence of functional adequacy.
3. Cask Identification	The applicant or licensee must conspicuously and durably mark the cask with a model number, unique identification number, and empty weight. [10 CFR 72.236(k)]	As specified in Section 9.1.8, each system is to be marked with the model number, unique cask number, empty weight, and additional information.
Confinement System	American Society of Mechanical Engineers (ASME), "Boiler and Pressure Vessel (B&PV) Code," Section III, Subsection NB or NC "American National Standard for Radioactive Materials – Leakage Tests on Packages for Shipment" (ANSI N14.5-1997)	As specified in Section 3.1.2, the canister is designed in accordance with the ASME Code, Section III, Subsection NB. Exceptions to the Code are provided in Appendix B, Table B3-1. The confinement system is leak tested in accordance with ANSI N14.5 following shield lid welding as specified in Appendix A, LCO 3.1.5.
Confinement Internals (e.g., basket)	ASME B&PV Code, Section III, Subsection NG	As specified in Section 3.1.2, the basket structure is designed in accordance with the ASME Code, Section III, Subsection NG.
Metal Cask Overpack	ASME B&PV Code, Section VIII	Not applicable.
Concrete Cask Overpack	American Concrete Institute (ACI) Standards 318 and 349, as appropriate	As stated in Section 3.1.2, the concrete cask is designed in accordance with ACI-349 and ANSI/ANS-57.9.
Other Metal Structures	ASME B&PV Code, Section III, Subsection NF American Institute of Steel Construction (AISC), "Manual of Steel Construction"	Not applicable.

Table 1.5-1 NUREG-1536 Compliance Matrix (continued)

Chapter 11 – Accident Analysis		
Area	**Regulatory Requirement**	**Description of Compliance**
1. Credible Accident and Natural Phenomena	Structures, systems, and components (SSC) important to safety must be designed to withstand credible accidents and natural phenomena without impairing their ability to perform safety functions. [10 CFR 72.24(d)(2); 10 CFR 72.122(b)(2), (3), (d), and (g)]	Analyses of the system for a variety of postulated off-normal and accident conditions are presented in Sections 11.1 and 11.2, respectively.
2. Controlled Area Boundary Dose	During normal operations and anticipated occurrences, the annual dose equivalent to any real individual who is located beyond the controlled area must not exceed 25 mrem to the whole body, 75 mrem to the thyroid and 25 mrem to any other organ as a result of exposure to the sources listed in the regulations. [10 CFR 72.104(a); 10 CFR 72.236(d); and 10 CFR 72.24(d)]	The controlled area boundary dose calculations and minimum controlled area boundary distances under normal conditions are presented in Section 10.4.
3. Design Basis Accident Dose	Dose Limits for Design-Basis Accidents require that any individual located on or beyond the nearest boundary of the controlled area shall not receive a dose greater than 5 rem to the whole body or any organ from any design basis accident. [10 CFR 72.106(b); 10 CFR 72.24(m); and 10 CFR 72.24(d)(2)]	Section 10.2.2 indicates that the controlled area boundary dose as a result of an accident will not exceed 5 rem to any organ, exclusive of skin.
4. Criticality Control	The spent fuel must be maintained in a subcritical condition under credible conditions. [10 CFR 72.236(c) and 10 CFR 72.124(a)]	Section 6.4 presents the results of the criticality evaluation of the storage cask for the most credible reactive conditions, including the consequences of the off-normal and accident condition events evaluated in Sections 11.1 and 11.2, respectively.
5. Confinement Control	The cask and its systems important to safety must be evaluated, using appropriate tests or by other means acceptable to the Commission, to demonstrate that they will reasonably maintain confinement of radioactive material under credible accident conditions. [10 CFR 72.236(l)]	As stated in Section 7.3, the confinement system maintains its integrity for all credible off-normal and accident conditions.
6. Ready Retrieval of Spent Fuel	Storage systems must allow ready retrieval of spent fuel for further processing or disposal. [10 CFR 72.122(l)]	The off-normal and accident condition analyses presented in Sections 11.1 and 11.2 demonstrate that the spent fuel contents are protected during off-normal and accident conditions. Therefore, retrieval of the spent fuel from the system is not impacted by these postulated events.

Table 1.5-1 NUREG-1536 Compliance Matrix (continued)

Chapter 11 – Accident Analysis		
Area	**Regulatory Requirement**	**Description of Compliance**
7. Monitoring Systems	Instrumentation and control systems must be provided to monitor systems that are important to safety over anticipated ranges for normal operation and off-normal operation. Those instruments and control systems that must remain operational under accident conditions must be identified in the Safety Analysis Report. [10 CFR 72.122(i)]	The system utilizes temperature monitoring instrumentation but utilizes routine inspection and surveillance to verify proper thermal operation of the system. The confinement system is fully welded per Appendix A, Section A3.1.5, to assure no credible leakage from the confinement boundary. No seal monitoring is required.
8. Surveillance	Where instrumentation and control systems are not appropriate, storage confinement systems must have the capability for continuous monitoring in a manner such that the licensee will be able to determine when corrective action needs to be taken to maintain safe storage conditions. [72.122(h)(4)]	No active, continuous monitoring systems are required. Licensee radiological monitoring programs assure ISFSI operations meet 10 CFR 72.104 and 72.106 requirements.

Chapter 2

2.0 PRINCIPAL DESIGN CRITERIA

The Universal Storage System is a canister-based spent fuel dry storage cask system that is designed to be compatible with the Universal Transportation System. It is designed to store a variety of PWR and BWR fuel assemblies. This chapter presents the design bases, including the principal design criteria, limiting load conditions, and operational parameters of the Universal Storage System. The principal design criteria are summarized in Table 2-1.

Table 2-1 Summary of Universal Storage System Design Criteria

Parameter	Criteria
Design Life	50 years
Design Code - Confinement	ASME Code, Section III, Subsection NB [1] for confinement boundary
Design Code - Nonconfinement	
Basket	ASME Code, Section III, Subsection NG [2] and NUREG/CR-6322 [3]
Vertical Concrete Cask	ACI-349 [4], ACI-318 [5]
Transfer Cask	ANSI N14.6 [6] and NUREG-0612 [7]
Maximum Weight:	
Canister with Design Basis PWR Fuel Assembly (dry, including inserts) (Class 2)	72,900 lbs.
Canister with Design Basis BWR Fuel (dry) (Class 5)	75,600 lbs.
Vertical Concrete Cask (loaded) (Class 5)	323,900 lbs.
Transfer Cask (Class 3)	121,500 lbs.
Thermal:	
Maximum Fuel Cladding Temperature:	
PWR Fuel	752°F (400°C) for Normal and Transfer [25] 1058°F (570°C) Off-Normal and Accident [21]
BWR Fuel	752°F (400°C) for Normal and Transfer [25] 1058°F (570°C) Off-Normal and Accident [21]
Ambient Temperature:	
Normal (average annual ambient)	76°F
Off-Normal (extreme cold; extreme hot)	-40°F; 106°F
Accident	133°F
Concrete Temperature:	
Normal Conditions	≤ 150°F (bulk); ≤ 200°F (local) [24]
Off-Normal/Accident Conditions	≤ 350°F local/ surface [4]
Cavity Atmosphere	Helium

2.1.1 PWR Fuel Evaluation

The parameters of the PWR fuel assemblies that may be loaded in the transportable storage canister (canister) are shown in Table 2.1.1-1. The maximum initial enrichment limit represents the maximum fuel rod enrichment limit for variably enriched PWR assemblies. Each canister may contain up to 24 undamaged PWR fuel assemblies.

The design of the Universal Storage System is based on certain reference fuel assemblies that maximize the source terms used for the shielding and criticality evaluation, and that maximize the weight used in the structural evaluation. These reference fuel assemblies are described in the chapters appropriate to the condition being evaluated. The principal characteristics and parameters of a reference fuel, such as fuel volume, initial enrichment, cool time and burnup, do not represent limiting or bounding values. Bounding values for a fuel class are established based primarily on how principal parameters are combined and on the loading conditions or restrictions established for a class of fuel based on its parameters.

The maximum decay heat load for the storage of all types of PWR fuel assemblies is 23.0 kW (0.958 kW/assembly), except in cases where preferential loading is employed.

The minimum cool time is based on the maximum decay heat load (23.0 kW) and the dose rate limits for the concrete and transfer casks and is presented in Section 5.5. PWR fuel must be loaded in accordance with Table 2.1.1-2.

Site specific fuel that does not meet the enrichment and burnup limits of this section and Table 2.1.1-1 is separately evaluated in Section 2.1.3 to establish loading limits.

Table 2.1.1-1 PWR Fuel Assembly Characteristics

Fuel Class[1, 2]	**14 × 14**	**14 × 14**	**15 × 15**	**15 × 15**	**15 × 15**	**16 × 16**	**17 × 17**
Fissile Isotopes	UO_2	UO_2	UO_2	UO_2	UO_2	UO_2	UO_2
Max Initial Enrichment (wt % ^{235}U)[3]	5.0	5.0	4.6	4.4	4.2	4.8	4.3
Max Initial Enrichment (wt % ^{235}U)[4]	5.0	5.0	5.0	5.0	5.0	5.0	5.0
Number of Fuel Rods	176	179	204	208	216	236	264
Number of Water Holes	5	17	21	17	9	5	25
Max Assembly Average Burnup (MWd/MTU)[8]	60,000	60,000	60,000	60,000	60,000	60,000	60,000
Min Cool Time (years)	5	5	5	5	5	5	5
Min Average Enrichment (wt % ^{235}U)	1.9	1.9	1.9	1.9	1.9	1.9	1.9
Cladding Material	Zirconium Alloy	Zirconium Alloy	Zirconium Alloy	Zirconium Alloy	Zirconium Alloy	Zirconium Alloy	Zirconium Alloy
Nonfuel Hardware[5]	FM, T, BPR	FM, T, BPR	FM, T, BPR	FM, T, BPR	FM, T, BPR	FM, T, BPR	FM, T, BPR
Max Weight (lb) per Storage Location[6]	1,602	1,602	1,602	1,602	1,602	1,602	1,602
Max Decay Heat (Watts) per Storage Location[7]	958.3	958.3	958.3	958.3	958.3	958.3	958.3
Fuel Condition	Undamaged	Undamaged	Undamaged	Undamaged	Undamaged	Undamaged	Undamaged

General Notes:

1. Fuel, except Maine Yankee fuel, must be loaded in accordance with Table 2.1.1-2.
2. Maine Yankee fuel must be loaded in accordance with Tables 2.1.3.1-4 and 2.1.3.1-5, as appropriate.
3. Maximum initial enrichment without boron credit. Represents the maximum fuel rod enrichment for variably enriched assemblies. Assemblies meeting this limit may contain a flow mixer (FM) (thimble plug), an ICI thimble (T), a burnable poison rod insert (BPR), or a solid stainless steel rod insert.
4. Maximum initial enrichment with taking credit for a minimum soluble boron concentration of 1000 ppm in the spent fuel pool water. Represents the maximum fuel rod enrichment for variably enriched assemblies. Assemblies meeting this limit may contain a flow mixer (thimble plug).
5. Assemblies may not contain control element assemblies, except as permitted for site specific fuel.
6. Weight includes the weight of nonfuel-bearing components, including solid stainless steel rods inserted into guide tube positions.
7. Maximum decay heat may be higher for site-specific fuel configurations, which control fuel loading position.
8. Peak average rod burnup is limited to 62,500 MWd/MTU.

2.1.2 BWR Fuel Evaluation

The parameters of the BWR fuel assemblies that may be loaded in the transportable storage canister (canister) are shown in Table 2.1.2-1. Each canister may contain up to 56 undamaged BWR fuel assemblies.

The design of the Universal Storage System is based on certain reference fuel assemblies that maximize the source terms used for the shielding and criticality evaluation, and that maximize the weight used in the structural evaluation. These reference fuel assemblies are described in the chapters appropriate to the condition being evaluated. The principal characteristics and parameters of a reference fuel, such as fuel volume, initial enrichment, cool time and burnup, do not represent limiting or bounding values. Bounding values for a fuel class are established based primarily on how principal parameters are combined and on the loading conditions or restrictions established for a class of fuel based on its parameters.

The maximum canister decay heat load for the storage of all types of BWR fuel assemblies is 23.0 kW (0.411 kW/assembly).

The minimum cooling time determination is based on the maximum decay heat load (23.0 kW) and the dose rate limits for the concrete and transfer casks and is presented in Section 5.5. BWR fuel must be loaded in accordance with Table 2.1.2-2.

Table 2.1.2-1 BWR Fuel Assembly Characteristics

Fuel Class[1]	**7 × 7**	**7 × 7**	**8 × 8**	**8 × 8**	**8 × 8**	**9 × 9**	**9 × 9**
Fissile Isotopes	UO_2	UO_2	UO_2	UO_2	UO_2	UO_2	UO_2
Max Initial Enrichment (wt % ^{235}U)[1]	4.5	4.7	4.5	4.7	4.8	4.5	4.6
Number of Fuel Rods	48	49	60	62	63	74	79
Number of Water Holes	1[4]	0	1/4[5]	2	4	2/7[5]	2
Max Assembly Average Burnup (MWD/MTU)	45,000	45,000	45,000	45,000	45,000	45,000	45,000
Min Cool Time (years)	5	5	5	5	5	5	5
Min Average Enrichment (wt % ^{235}U)	1.9	1.9	1.9	1.9	1.9	1.9	1.9
Cladding Material	Zirconium Alloy	Zirconium Alloy	Zirconium Alloy	Zirconium Alloy	Zirconium Alloy	Zirconium Alloy	Zirconium Alloy
Nonfuel Hardware[2]	Channel	Channel	Channel	Channel	Channel	Channel	Channel
Max Channel Thickness (mil)	120	120	120	120	120	120	120
Max Weight (lb) per Storage Location[3]	702	702	702	702	702	702	702
Max Decay Heat (Watts) per Storage Location	410.7	410.7	410.7	410.7	410.7	410.7	410.7
Fuel Condition	Undamaged	Undamaged	Undamaged	Undamaged	Undamaged	Undamaged	Undamaged

General Notes:
1. Fuel must be loaded in accordance with Table 2.1.2-2.
2. Each BWR fuel assembly may have a zirconium alloy channel or be unchanneled, but cannot have a stainless steel channel.
3. Weight includes the weight of the channel.
4. Solid fill or water rod.
5. Water rods may occupy more than one fuel lattice location.

2.1.3 Site Specific Spent Fuel

This section describes site specific spent fuel, i.e., fuel assemblies that are configured differently or that have different fuel parameters, such as enrichment or burnup, than the fuel assemblies considered in the design basis. The site specific fuel configurations result from conditions that occurred during reactor operations, participation in research and development programs, testing programs intended to improve reactor operations or from the insertion of control components or other items within the fuel assembly.

Site specific spent fuel configurations are either shown to be bounded by the design basis fuel analysis or are separately evaluated. Unless specifically excepted, site specific spent fuel must also meet the conditions specified for the fuel considered in the design basis that is described in Sections 2.1.1 and 2.1.2.

2.1.3.1 Maine Yankee Site Specific Spent Fuel

The standard Maine Yankee site specific fuel is a Combustion Engineering PWR 14×14 assembly that is included in those fuel assemblies considered in the design basis fuel parameters described in Table 2.1.1-1. Maine Yankee spent fuel assemblies are categorized as undamaged or damaged as defined in Table 1-1. All damaged fuel and certain undamaged fuel configurations are placed in a Maine Yankee fuel can for storage in the Transportable Storage Canister. Each canister may contain up to 24 Maine Yankee assemblies, including up to 4 Maine Yankee Fuel Cans.

The estimated Maine Yankee site specific spent fuel inventory is shown in Section B2.0 of Appendix B. As noted, certain fuel configurations are preferentially loaded to take advantage of the design features of the Transportable Storage Canister and basket to allow the loading of fuel that does not specifically conform to the design basis spent fuel. Loading positions are shown in Figure 2.1.3.1-1.

The evaluated fuel includes those standard fuel assemblies modified by the installation or removal of fuel or nonfuel-bearing components. The three principal types of modifications are:

- The removal of fuel rods without replacement.
- The replacement of removed fuel rods or burnable poison rods with rods of another material, such as stainless steel, or with fuel rods of a different enrichment.
- The insertion of control elements, nonfuel items including start-up sources, or instrument or plug segments, in guide tube positions.

Site specific spent fuel also includes fuel assemblies that are uniquely designed to support reactor physics. These fuel assemblies include those that are variably enriched or that are variably enriched with annular axial blankets. Generally, these fuel assemblies (described in Sections 6.6.1.2.2 and 6.6.1.2.3) are bounded by the evaluation of the design basis fuel.

As described in Section 2.1.3.1.6, certain of the site-specific spent fuel configurations, including damaged and consolidated fuel loaded in Maine Yankee fuel cans, must be preferentially loaded in corner positions of the fuel basket. A fuel assembly with a burnup between 45,000 and 50,000 MWd/MTU must be preferentially loaded in a peripheral fuel position in the basket.

2.1.3.1.1 Damaged Fuel Lattices

There are two lattices for damaged fuel rods in the current Maine Yankee fuel inventory, designated CF1 and CA3 that are loaded in Maine Yankee fuel cans. CF1 is a lattice having roughly the same dimensions as a standard fuel assembly. It is a 9×9 array of tubes, some of which contain damaged fuel rods. CA3 is a previously used fuel assembly lattice that has had all of the rods removed, and into which, damaged fuel rods have been inserted. The CF1 and CA3 lattices are placed in a Maine Yankee fuel can for storage. No credit is taken for the lattice structures in the criticality, structural, or thermal analysis.

2.1.3.1.2 Maine Yankee Consolidated Fuel

The Maine Yankee fuel inventory includes two consolidated fuel lattices, which house undamaged fuel rods taken from three fuel assemblies. Each lattice is a 17×17 array formed using stainless steel grids and top and bottom stainless steel end fittings. Four solid stainless steel connector rods connect the end fittings. The top end fitting is designed so that the lattice can be handled by the standard fuel assembly lifting fixture (grapple). These lattices were not used in the reactor and the stainless steel hardware is not activated.

One of these lattices contains 283 fuel rods and 2 rod position vacancies. The other contains 172 fuel rods, with the 76 stainless steel dummy rods in the outer periphery of the lattice.

The consolidated fuel is placed in a Maine Yankee fuel can for storage. No credit is taken for the lattice structures in the criticality, structural, or thermal analysis.

2.1.3.1.3 Maine Yankee Spent Fuel with Inserted Integral Hardware or Nonfuel Items

Certain Maine Yankee fuel assemblies have either a Control Element Assembly or an Instrument Segment inserted in the fuel assembly. These components add to the gamma radiation source term of the standard fuel assembly.

A Maine Yankee Control Element Assembly (CEA) consists of five control rods mounted on a Type 304 stainless steel spider assembly. The five control rods are inserted in the fuel assembly guide tubes when the CEA is inserted in the fuel assembly. When fully inserted, the control element spider rests on the fuel assembly upper end fitting. The rods are fabricated from Inconel 625 or stainless steel and encapsulate B_4C as the primary neutron poison material. Fuel assemblies with a control element installed must be loaded into a Class 2 canister because of the additional height that the control element spider adds to the fuel assembly overall length. A CEA plug may also be inserted in a fuel rod. The CEA plug installs in the same position on the top of the fuel assembly, but the plug rods are only about 10 inches in length. These plugs are used to control water flow in the guide tubes. Fuel assemblies with CEA plugs installed must be loaded in a Class 2 canister.

Some standard fuel assemblies have an in-core instrument (ICI) thimble inserted in the center guide tube of the fuel assembly. The detector material and lead wire have been removed from the ICI assembly. The thimble top end and tube are primarily zirconium alloy. When installed, the instrument thimble does not add to the overall fuel assembly length. Consequently, fuel assemblies with ICI thimbles are loaded in the Class 1 canister.

The non-fuel inventory includes a segment of an ICI instrument thimble approximately 24 inches long. This segment is loaded in the corner guide tube position of an undamaged fuel assembly. The fuel assembly with the ICI segment installed must have a CEA flow plug installed to close the top of the corner guide tube, capturing the segment between the CEA flow plug and the bottom end plate of the fuel assembly. The ICI segment may be installed in a fuel assembly that also holds CEA finger tips in other corner guide tube positions. Because of the CEA fuel plug, the fuel assembly must be installed in a Class 2 canister.

The nonfuel inventory also includes five startup sources. One of the startup sources is unirradiated.

The startup sources include three Pu-Be sources and two Sb-Be sources that are installed in the center guide tubes of fuel assemblies that subsequently must be loaded in one of the four corner fuel positions of the basket. Each source is designed to fit in the center guide tube of an assembly, and only one startup source may be loaded in any fuel assembly. All five of these startup sources contain Sb-Be pellets, which are 50% Be by volume. One of the three Pu-Be sources is unirradiated and evaluation of this source is based on a "fresh" source material assumption.

2.1.3.1.4 Maine Yankee Spent Fuel with Unique Design

Certain Maine Yankee fuel assemblies were uniquely designed to accommodate reactor physics. These assemblies incorporate variable radial enrichment and axial blankets.

Two batches of fuel used at Maine Yankee contain variably enriched fuel rods. The maximum fuel rod enrichment of one batch is 4.21 wt % ^{235}U with the variably enriched rods enriched to 3.5 wt % ^{235}U. The maximum planar average enrichment of this batch is 3.99 wt % ^{235}U. For the other batch, the maximum fuel rod enrichment is 4.0 wt % ^{235}U, with the variably enriched rods enriched to 3.4 wt % ^{235}U. The maximum planar average enrichment of this batch is 3.92 wt % ^{235}U.

One batch of variably enriched fuel also incorporates axial end blankets with fuel pellets that have a center hole, referred to as annular fuel pellets. Annular fuel pellets are used in the top and bottom 5% of the active fuel length of each fuel rod in this batch.

2.1.3.1.5 Maine Yankee Fuel Can

Fuel assemblies classified as damaged that exceed the limits for loading as undamaged fuel and certain undamaged fuel configurations are loaded in a Maine Yankee fuel can, which is shown in Drawings 412-501 and 412-502. The fuel can may be loaded only in a corner position (positions numbered 3, 6, 19 and 22 in Figure 2.1.3.1-1) in the basket of a Class 1 canister. The fuel can analysis assumes the failure of 100% of the fuel rods held in the fuel can.

The fuel can is sized to accommodate a fuel assembly and must be loaded in a corner position of the fuel basket. As shown in the drawings, the can is provided in two configurations. Both cans are 162.8 inches in length and, in the top 4.5 inches, have an external square dimension of 8.8 inches. One configuration of the fuel can body has an internal square dimension of 8.52 inches and an external square dimension of 8.62 inches. The corresponding dimensions of the second configuration are 8.3 and 8.4 inches, respectively. The smaller cross-section allows the use of the fuel can in a basket in which the corner fuel loading positions of the bottom weldment are not enlarged. The fuel cans are closed on the bottom end by a 0.63-inch thick plate that is welded to the can shell. The plate has drilled holes in each corner to allow water to drain from the can. A screen covers the holes to preclude the release of gross particulates from the fuel can. A lid having an overall depth dimension of 2.38 inches closes the can. The lid is not secured to the can shell, but is held in place when the shield lid is installed in the canister. The lid also has four drilled and screened holes. The damaged fuel is inserted in the fuel can and the lid is installed. Slots in the can shell allow the loaded can to be lifted and installed in the basket. Alternately, the fuel can may be inserted in a basket corner position before the damaged fuel assembly is inserted in the fuel can. Since the fuel can lid is held in place by the canister shield lid, the fuel can may be used only in the Class 1 canister.

A Maine Yankee fuel can containing fuel debris with greater than 20 Curies of plutonium, requires double containment for transport conditions in accordance with 10 CFR 71.63 (b).

The Maine Yankee fuel can design and fabrication specification summary is provided in Table 2.1.3.1-2. The major physical design parameters of the Maine Yankee fuel can are provided in Table 2.1.3.1-3. The structural evaluation of the Maine Yankee site specific fuel configurations is provided in Section 3.6.1

2.1.3.1.6 Maine Yankee Site Specific Spent Fuel Preferential Loading

The estimated Maine Yankee site specific spent fuel inventory is shown in Table 2.1.3.1-1. (Note that the population of fuel in a given configuration may change based on future spent fuel inspection or survey.) As shown in this table, certain fuel configurations are preferentially loaded to take advantage of the design features of the Transportable Storage Canister and basket to allow the loading of fuel that does not specifically conform to the design basis spent fuel. The designated preferential loading positions are shown in Figure 2.1.3.1-1.

Fuel with missing fuel rods, fuel with fuel rods that have been replaced by rods of other material, consolidated fuel lattices and damaged fuel are preferentially loaded in corner positions of the basket, numbered 3, 6, 19 and 22 in Figure 2.1.3.1-1. The requirements for preferential loading schemes using the corner positions result primarily from shielding or criticality evaluations of the designated fuel configurations.

Preferential loading is also used for spent fuel having a burnup between 45,000 and 50,000 MWd/MTU. This fuel is assigned to peripheral basket locations, which are the outer 12 fuel loading positions shown in Figure 2.1.3.1-1. Locating the high burnup fuel in the peripheral basket locations reduces the maximum temperatures of these assemblies.

High burnup fuel (45,000 – 50,000 MWd/MTU) may be loaded as undamaged fuel provided that ISG-11, Revision 2 [25] temperature limits are met. The 752°F (400°C) ISG-11, Revision 2 fuel temperature limit is met as shown in Table 4.1-4.

Fuel assemblies with a control element inserted will be loaded in a Class 2 canister and basket for storage and transport due to the increased length of the assembly with the control element installed. However, these assemblies are not restricted as to loading position within the basket.

Fuel assemblies with a startup source in the center guide tube position must be loaded in one of the basket corner positions. A fuel assembly may not hold more than one startup source.

The loading position of fuel assemblies holding the CEA finger tips and/or the ICI segment in a fuel assembly corner guide tube position is not controlled; however, these fuel assemblies must have a CEA flow plug to ensure these items are captured within the guide tube(s).

Chapter 3

Table of Contents

3.0 STRUCTURAL EVALUATION 3.1-1

3.1 Structural Design 3.1-1
3.1.1 Discussion 3.1-2
3.1.2 Design Criteria 3.1-6

3.2 Weights and Centers of Gravity 3.2-1

3.3 Mechanical Properties of Materials 3.3-1
3.3.1 Primary Component Materials 3.3-1
3.3.2 Fracture Toughness Considerations 3.3-16

3.4 General Standards 3.4.1-1
3.4.1 Chemical and Galvanic Reactions 3.4.1-1
3.4.1.1 Component Operating Environment 3.4.1-1
3.4.1.2 Component Material Categories 3.4.1-2
3.4.1.3 General Effects of Identified Reactions 3.4.1-12
3.4.1.4 Adequacy of the Canister Operating Procedures 3.4.1-12
3.4.1.5 Effects of Reaction Products 3.4.1-12
3.4.2 Positive Closure 3.4.2-1
3.4.3 Lifting Devices 3.4.3-1
3.4.3.1 Vertical Concrete Cask Lift Evaluation 3.4.3-5
3.4.3.2 Canister Lift 3.4.3-28
3.4.3.3 Standard Transfer Cask Lift 3.4.3-35
3.4.3.4 Advanced Transfer Cask Lift 3.4.3-66
3.4.4 Normal Operating Conditions Analysis 3.4.4-1
3.4.4.1 Canister and Basket Analyses 3.4.4-1
3.4.4.2 Vertical Concrete Cask Analyses 3.4.4-63
3.4.5 Cold 3.4.5-1

3.5 Fuel Rods 3.5-1

Table of Contents (Continued)

3.6 Structural Evaluation of Site Specific Spent Fuel 3.6-1
3.6.1 Structural Evaluation of Maine Yankee Site Specific Spent Fuel for Normal Operating Conditions 3.6-1
3.6.1.1 Maine Yankee Undamaged Spent Fuel 3.6-1
3.6.1.2 Maine Yankee Damaged Spent Fuel 3.6-2

3.7 References 3.7-1

3.8 Carbon Steel Coatings Technical Data 3.8-1
3.8.1 Carboline 890 ..... 3.8-2
3.8.2 Keeler & Long E-Series Epoxy Enamel 3.8-4
3.8.3 Description of Electroless Nickel Coating 3.8-8
3.8.4 Keeler & Long Kolor-Poxy Primer No. 3200 ..... 3.8-12
3.8.5 Acrythane Enamel Y-1 Series Top Coating 3.8-14

3.6 Structural Evaluation of Site Specific Spent Fuel

This section presents the structural evaluation of fuel assemblies or configurations, which are unique to specific reactor sites or which differ from the UMS® Storage System design basis fuel. These site specific configurations result from conditions that occurred during reactor operations, participation in research and development programs, and from testing programs intended to improve reactor operations. Site specific fuel includes fuel assemblies that are uniquely designed to accommodate reactor physics, such as axial fuel blanket and variable enrichment assemblies, and fuel that is classified as damaged. Damaged fuel includes fuel rods with cladding that exhibit defects greater than pinhole leaks or hairline cracks.

Site specific fuel assembly configurations are either shown to be bounded by the analysis of the standard design basis fuel assembly configuration of the same type (PWR or BWR), or are shown to be acceptable contents by specific evaluation.

3.6.1 Structural Evaluation of Maine Yankee Site Specific Spent Fuel for Normal Operating Conditions

This section describes the structural evaluation for site specific spent fuel configurations. As described in Sections 1.3.2.1 and 2.1.3.1, the inventory of site specific spent fuel configurations includes fuel classified as undamaged, undamaged with additional fuel and nonfuel-bearing hardware, consolidated fuel and fuel classified as damaged. Damaged fuel is separately containerized in one of the two configurations of the Maine Yankee Fuel Can.

3.6.1.1 Maine Yankee Undamaged Spent Fuel

The description for Maine Yankee site specific fuel is in Section 1.3.2.1. The standard spent fuel assembly for the Maine Yankee site is the Combustion Engineering (CE) 14×14fuel assembly. Fuel of the same design has also been supplied by Westinghouse and by Exxon. The standard 14×14 fuel assemblies are included in the population of the design basis PWR fuel assemblies for the UMS® Storage System (see Table 2.1.1-1). The structural evaluation for the UMS® transport system loaded with the standard Maine Yankee fuels is bounded by the structural evaluations in Chapter 3 for normal conditions of storage and Chapter 11 for off-normal and accident conditions of storage.

With the Control Element Assembly (CEA) inserted, the weight of a standard CE 14×14 fuel assembly is 1,360 pounds. This weight is bounded by the weight of the design basis PWR fuel assembly (37,608/24 = 1,567 lbs) used in the structural evaluations (Table 3.2-1). The fuel configurations with removed fuel rods, with fuel rods replaced by solid stainless steel or zirconium alloy rods, or with poison rods replaced by hollow zirconium alloy tubes, all weigh less than the standard CE 14×14 fuel assembly. The configuration with instrument thimbles installed in the center guide tube position weighs less than the standard assembly with the installed control element assembly. Consequently, this configuration is also bounded by the weight of the design basis fuel assembly. Since the weight of any of these fuel assembly configurations is bounded by the design basis fuel assembly weight, no additional analysis of these configurations is required.

The two consolidated fuel lattices are each constructed of 17×17 stainless steel fuel grids and stainless steel end fittings, which are connected by 4 stainless steel support rods. One of the consolidated fuel lattices has 283 fuel rods with 2 empty positions. The other has 172 fuel rods, with the remaining positions either empty or holding stainless steel rods. The calculated weight for the heaviest of the two consolidated fuel lattices is 2,100 pounds. Only one consolidated fuel lattice can be loaded into any one canister. The weight of the site specific 14×14 fuel assembly plus the CEA is approximately 1,360 lbs. Twenty-three (23) assemblies (at 1,360 lbs each) in addition to the consolidated fuel assembly (at approximately 2,100 lbs) would result in a total weight of 33,380 pounds.

Therefore, the design basis UMS® PWR fuel weight of 37,608 lbs bounds the site specific fuel and consolidated fuel by 12%. The evaluations for the Margin of Safety for the dead weight load of the fuel and the lifting evaluations in Section 3.4.4 bound the Margins of Safety for the Maine Yankee site specific fuel.

3.6.1.2 Maine Yankee Damaged Spent Fuel

The Maine Yankee fuel can, shown in Drawings 412-501 and 412-502, is provided to accommodate Maine Yankee damaged fuel. The fuel can fits within a standard PWR basket fuel tube. The primary function of the Maine Yankee fuel can is to confine the fuel material within the can to minimize the potential for dispersal of the fuel material into the canister cavity volume.

The Maine Yankee fuel can is designed to hold an undamaged fuel assembly, a damaged fuel assembly, a fuel assembly with a burnup between 45,000 and 50,000 MWd/MTU and having a cladding oxidation layer thickness greater than 80 microns, or consolidated fuel in the Maine Yankee fuel inventory.

The fuel can is provided in two configurations that differ only in the square cross-section of the body of the fuel can. Both fuel can configurations have walls made of 0.048-inch thick Type 304 stainless steel sheet (18 gauge), have a total length of 162.8 inches and both have a bottom plate that is 0.63 inch thick. Four holes in the plates, screened with a Type 304 stainless steel wire screen (250 openings/inch × 250 openings/inch mesh), permit water to be drained from the can during loading operations. Since the bottom surface of the fuel can rests on the canister bottom plate, additional slots are machined in the fuel can (extending from the holes to the side of the bottom assembly) to allow the water to be drained from the can. At the top of the can, the wall thickness is increased to 0.15-inch to permit the can to be handled. Slots in the top assembly side plates allow the use of a handling tool to lift the can and contents. To confine the contents within the can, the top assembly consists of a 0.88-inch thick plate with screened drain holes identical to those in the bottom plate. Once the can is loaded, the can and contents are inserted into the basket, where the can may be supported by the sides of the fuel assembly tube, which are backed by the structural support disks. Alternately, the empty fuel can may be placed in the basket prior to having the designated contents inserted in the fuel can. The two configurations have different cross-sections in the can body. The first configuration has a square minimum internal width of 8.52 inches. The second has a square minimum internal width of 8.3 inches. This smaller internal width is conservatively used in the load handling analysis.

In normal operation, the can is in a vertical position. The weight of the fuel can contents is transferred through the bottom plate of the can to the canister bottom plate, which is the identical load path for undamaged fuel. The only loading in the vertical direction is the weight of the can and the top assembly. The lifting of the can with its contents is also in the vertical direction.

Classical hand calculations are used to qualify the stresses in the Maine Yankee fuel can.

A conservative bounding temperature of 600°F is used for the evaluation of the fuel can for normal conditions of storage. A temperature of 300°F is used for the lifting components at the top of the fuel can and for the lifting tool.

Calculated stresses are compared to allowable stresses in accordance with ASME Code, Section III, Subsection NG. The ASME Code, Section III, Subsection NG allowable stresses used for stress analysis are:

Property	600°F	300°F
S_u	63.3 ksi	66.0 ksi
S_y	18.6 ksi	22.5 ksi
S_m	16.7 ksi	20.0 ksi
E	25.2×10^3 ksi	27.0×10^3 ksi

The Maine Yankee fuel can is evaluated for dead weight and handling loads for normal conditions of storage. Since the can is not restrained, it is free to expand. Therefore, the thermal stress is considered to be negligible.

The Maine Yankee fuel can lifting components and handling tools are designed with a safety factor of 3.0 on material yield strength.

3.6.1.2.1 Dead Weight and Handling Loading Evaluation

The weight of the Maine Yankee fuel can is 130 pounds. The maximum compressive stress acting in the tube of the fuel can is due to its own weight in addition to that of the top assembly. A 10% dynamic load factor is applied to the fuel can weight for an applied load of 143 pounds to account for loads due to handling. Based on the minimum cross-sectional area of $(8.42)^2 - (8.32)^2 = 1.674$ in^2, the margin of safety at 300°F is:

$$\text{M.S.} = 20{,}000/(143/1.674) - 1$$
$$\text{M.S.} = +\text{Large}$$

3.6.1.2.2 Lifting Evaluation

Based on the loaded weight of the fuel can, the lift evaluation does not require the use of the design criteria of ANSI N14.6 or NUREG-0612. However, for purposes of conservatism and good engineering practice, a factor of safety of three on material yield strength is used for the stress evaluations for the lift condition. Since a combined stress state results from the loading and the calculated stresses are compared to material yield strength, the Von Mises stress is computed.

Chapter 4

List of Tables

Table 4.1-1 Summary of Thermal Design Conditions for Storage 4.1-4
Table 4.1-2 Summary of Thermal Design Conditions for Transfer 4.1-5
Table 4.1-3 Maximum Allowable Material Temperatures 4.1-6
Table 4.1-4 Summary of Thermal Evaluation Results for the Universal Storage System: PWR Fuel 4.1-7
Table 4.1-5 Summary of Thermal Evaluation Results for the Universal Storage System: BWR Fuel 4.1-8
Table 4.2-1 Thermal Properties of Solid Neutron Shield (NS-4-FR and NS-3) 4.2-2
Table 4.2-2 Thermal Properties of Stainless Steel 4.2-2
Table 4.2-3 Thermal Properties of Carbon Steel 4.2-3
Table 4.2-4 Thermal Properties of Chemical Copper Lead 4.2-3
Table 4.2-5 Thermal Properties of Type 6061-T651 Aluminum Alloy 4.2-3
Table 4.2-6 Thermal Properties of Helium 4.2-4
Table 4.2-7 Thermal Properties of Dry Air 4.2-4
Table 4.2-8 Thermal Properties of Zirconium Alloy Cladding 4.2-5
Table 4.2-9 Thermal Properties of Fuel (UO_2) 4.2-5
Table 4.2-10 Thermal Properties of BORAL Composite Sheet 4.2-6
Table 4.2-11 Thermal Properties of Concrete 4.2-6
Table 4.2-12 Thermal Properties of Water 4.2-7
Table 4.2-13 Thermal Properties of METAMIC 4.2-7
Table 4.4.1.2-1 Effective Thermal Conductivities for PWR Fuel Assemblies 4.4.1-23
Table 4.4.1.2-2 Effective Thermal Conductivities for BWR Fuel Assemblies 4.4.1-24
Table 4.4.1.2-3 Effective Thermal Conductivities for PWR Fuel Tubes 4.4.1-25
Table 4.4.1.2-4 Effective Thermal Conductivities for BWR Fuel Tubes 4.4.1-26

Table 4.4.3-1 Maximum Component Temperatures for the Normal Storage Condition - PWR 4.4.3-14
Table 4.4.3-2 Maximum Component Temperatures for the Normal Storage Condition - BWR 4.4.3-15
Table 4.4.3-3 Maximum Component Temperatures for the Transfer Condition – PWR Fuel with Design Basis 23 kW Uniformly Distributed Heat Load 4.4.3-16

List of Tables (continued)

Table 4.4.3-4 Maximum Component Temperatures for the Transfer Condition – BWR Fuel with Design Basis 23 kW Uniformly Distributed Heat Load 4.4.3-16
Table 4.4.3-5 Maximum Limiting Component Temperatures in Transient Operations for the Reduced Heat Load Cases for PWR Fuel 4.4.3-17
Table 4.4.3-6 Maximum Limiting Component Temperatures in Transient Operations for the Reduced Heat Load Cases for PWR Fuel after In-Pool Cooling 4.4.3-18
Table 4.4.3-7 Maximum Limiting Component Temperatures in Transient Operations for the Reduced Heat Load Cases for PWR Fuel after Forced-Air Cooling 4.4.3-18
Table 4.4.3-8 Maximum Limiting Component Temperatures in Transient Operations for BWR Fuel 4.4.3-19
Table 4.4.3-9 Maximum Limiting Component Temperatures in Transient Operations after Vacuum for BWR Fuel after In-Pool Cooling 4.4.3-20
Table 4.4.3-10 Maximum Limiting Component Temperatures in Transient Operations after Vacuum for BWR Fuel after Forced-Air Cooling 4.4.3-20
Table 4.4.3-11 Maximum Limiting Component Temperatures in Transient Operations after Helium for BWR Fuel after In-Pool Cooling..... 4.4.3-21
Table 4.4.3-12 Maximum Limiting Component Temperatures in Transient Operations after Helium for BWR Fuel after Forced-Air Cooling.. 4.4.3-21
Table 4.4.3-13 Maximum Limiting Component Temperatures in Transient Operations after Helium for PWR Fuel after In-Pool Cooling 4.4.3-21
Table 4.4.3-14 Maximum Limiting Component Temperatures in Transient Operations after Helium for PWR Fuel after Forced-Air Cooling .. 4.4.3-22
Table 4.4.5-1 PWR Per Assembly Fuel Generated Gas Inventory (Fission Gas Basis – 60 GWd/MTU, 1.9 wt % ^{235}U) 4.4.5-4
Table 4.4.5-2 PWR Canister Free Volume (No Fuel or Inserts) 4.4.5-4
Table 4.4.5-3 PWR Maximum Normal Condition Pressure Summary 4.4.5-4
Table 4.4.5-4 BWR Per Assembly Fuel Generated Gas Inventory 4.4.5-5
Table 4.4.5-5 BWR Canister Free Volume (No Fuel or Inserts)..... 4.4.5-5
Table 4.4.5-6 BWR Maximum Normal Condition Pressure Summary 4.4.5-5

4.0 THERMAL EVALUATION

This section presents the thermal design and analyses of the Universal Storage System for normal conditions of storage of spent nuclear fuel. The analyses include consideration of design basis PWR and BWR fuel. Results of the analyses demonstrate that with the design basis contents, the Universal Storage System meets the thermal performance requirements of 10 CFR 72 [1].

4.1 Discussion

The Universal Storage System consists of a Transportable Storage Canister, Vertical Concrete Cask, and a transfer cask. In long-term storage, the canister is installed in the concrete cask, which provides passive radiation shielding and natural convection cooling. The fuel is loaded in a basket structure positioned within the canister. The transfer cask is used for the handling of the canister. The thermal performance of the concrete cask containing the design basis fuel (during storage) and the performance of the transfer cask containing design basis fuel (during handling) are evaluated herein.

The significant thermal design feature of the Vertical Concrete Cask is the passive convective air flow up along the side of the canister. Cool (ambient) air enters at the bottom of the concrete cask through four inlet vents. Heated air exits through the four outlets at the top of the cask. Radiant heat transfer occurs from the canister shell to the concrete cask liner, which also transmits heat to the adjoining air flow. Conduction does not play a substantial role in heat removal from the canister surface. Natural circulation of air inside the Vertical Concrete Cask, in conjunction with radiation from the canister surface, maintains the fuel cladding temperature and all of the concrete cask component temperatures below their design limits.

The UMS® Storage System design basis heat load is 23.0 kW for up to 24 PWR (0.958 kW per assembly) or up to 56 BWR (0.411 kW per assembly) fuel assemblies, except in cases where preferential loading patterns are employed.

The thermal evaluation considers normal, off-normal, and accident conditions of storage. Each of these conditions can be described in terms of the environmental temperature, use of solar insolation, and the condition of the air inlets and outlets, as shown in Table 4.1-1. The design conditions for transfer are defined in Table 4.1-2. The transfer conditions consider the transient effect for PWR and BWR fuel, starting from the removal of the transfer cask/canister from the spent fuel pool. The canister is considered under normal operation to be inside the transfer cask and initially filled with water. The canister is vacuum dried, back-filled with helium and then transferred into the Vertical Concrete Cask. As shown in Section 4.4.3, the time duration of the spent fuel in the water and vacuum conditions is administratively controlled to prevent general boiling of the water and to ensure that the allowable temperatures of the limiting components (fuel cladding, structural disks and heat transfer disks) are not exceeded.

This evaluation applies different component temperature limits and different material stress limits for long-term conditions and short-term conditions. Normal storage is considered to be a long-term condition. Off-normal and accident events, as well as the transfer condition that temporarily occurs during the preparation of the canister while it is in the transfer cask, are considered as short-term conditions. Thermal evaluations are performed for the design basis PWR and BWR fuels for all design conditions. The maximum allowable material temperatures for long-term and short-term conditions are provided in Table 4.1-3.

During normal conditions of storage and hypothetical accident conditions, the concrete cask must reject the fuel decay heat to the environment without exceeding the operational temperature ranges of the components important to safety. In addition, to maintain fuel rod integrity for normal conditions of storage the fuel must be maintained at a sufficiently low temperature in an inert atmosphere to preclude thermally induced fuel rod cladding deterioration. To preclude fuel degradation, the maximum allowable cladding temperature under normal conditions of storage and transfer for PWR fuel and BWR fuel assemblies is 752°F (400°C) in accordance with ISG-11, Revision 3 [38]. Additionally, the maximum cladding temperature under off-normal and accident conditions must remain below 1,058°F (570°C). Canisters containing fuel assemblies with burnup greater than 45 GWd/MTU are limited to 10 or fewer thermal cycles where the fuel cladding temperature change is greater than 117°F (65°C) during system drying, loading and transfer operations. Cycles in excess of this limit could inadvertently enhance undesirable hydride reorientation to form radial hydrides. The basis for this limitation on thermal cycles is provided by research performed by Westinghouse [39]. The implementation of the thermal cycling limitation for higher burnup fuel (>45 GWd/MTU) is provided in NAC-UMS® Technical Specification LCO 3.1.1 and discussed in Appendix 12C Technical Specification Bases for the NAC-UMS® System. Finally, for the structural components of the storage system, the thermally

induced stresses, in combination with pressure and mechanical load stresses, must be below material allowable stress levels.

Thermal evaluations for normal conditions of storage and transfer (canister handling) condition operations are presented in Section 4.4. The finite element method is used to calculate the temperatures for the various components of the concrete cask, canister, basket, fuel cladding and transfer cask. Thermal models used in evaluation of normal and transfer conditions are described in Section 4.4.1.

A summary of the thermal evaluation results for the Universal Storage System are provided in Tables 4.1-4 and 4.1-5 for the PWR and BWR cases, respectively. Evaluation results for accident conditions of "All air inlets and outlets blocked" and "Fire" are presented in Chapter 11. The results demonstrate that the calculated temperatures are below the allowable component temperatures for all normal (long-term) storage conditions and for short-term events. The thermally induced stresses, combined with pressure and mechanical load stresses, are also within the allowable levels, as demonstrated in Chapter 3.

Table 4.1-1 Summary of Thermal Design Conditions for Storage

Condition[1]		Environmental Temperature (°F)	Solar Insolation[2]	Condition of Concrete Cask Inlets and Outlets
Normal		76	Yes	All inlets and outlets open
Off-Normal - Half Air Inlets Blocked		76	Yes	Half inlets blocked and all outlets open
Off-Normal - Severe Heat		106	Yes	All inlets and outlets open
Off-Normal - Severe Cold		-40	No	All inlets and outlets open
Accident - Extreme Heat		133	Yes	All inlets and outlets open
Accident - All Air Inlets and Outlets Blocked[3]		76	Yes	All inlets and outlets blocked
Accident - Fire[4]	During Fire	1475	Yes	All inlets and outlets open
	Before and After Fire	76	Yes	All inlets and outlets open

1. Off-normal and accident condition analyses are presented in Chapter 11.
2. Solar Insolation per 10 CFR 71:
   Curved Surface: 400 g cal/cm^2 (1475 Btu/ft^2) for a 12-hour period.
   Flat Horizontal Surface: 800 g cal/cm^2 (2950 Btu/ft^2) for a 12-hour period.
3. This condition bounds the case in which all inlets are blocked, with all outlets open.
4. The evaluated fire accident is the described in Section 11.2.6.

normal storage condition. The 1°F temperature difference has an insignificant effect on the system pressure calculation. Each of the UMS® PWR fuel types is individually evaluated for normal condition pressure, and sets the maximum normal condition pressure at 4.21 psig. A summary of the maximum pressure in each PWR canister class is shown in Table 4.4.5-3. The table also includes the fuel type producing the listed maximum pressures.

4.4.5.2 Maximum Internal Pressure for BWR Fuel Canister

BWR canister maximum pressures are determined in the same manner as those documented for the PWR canister cases. Primary differences between PWR and BWR analysis include a maximum normal condition average gas temperature of 410°F, rod backfill gas pressures of 132 psig, and limits pressurizing gases to fission gases (including helium actinide decay gas), rod backfill gases, and canister backfill gas. The 132 psig employed in this analysis is significantly higher than the 6 atmosphere maximum pressure reported in open literature. BWR assemblies do not contain an equivalent to the PWR BPRAs and, therefore, do not require ^{10}B helium generated gases to be added. Fissile gas inventories for the maximum fissile material assemblies in each of the three BWR lattices configurations (7×7, 8×8, and 9×9) are shown in Table 4.4.5-4. Free volumes, without fuel components, in UMS® canister classes 4 and 5 are shown in Table 4.4.5-5. Maximum pressures for each canister class are listed in Table 4.4.5-6. The maximum normal condition pressure of 3.97 psig is based on a GE 7×7 assembly, designed for a BWR/2-3 reactor, with gas inventories conservatively taken from a 60,000 MWD/MTU source term. The normal condition pressure for a UMS® storage canister containing the GE 9×9 fuel assembly with 79 fuel rods is 3.96 psig. Similar fuel masses and displaced volume account for similar canister pressures.

Table 4.4.5-1 PWR Per Assembly Fuel Generated Gas Inventory (Fission Gas Basis – 60 GWd/MTU, 1.9 wt % ^{235}U)

Array	Assy Type	MTU	Moles
14×14	WE Standard	0.4144	35.52
15×15	B&W	0.4807	41.32
16×16	CE (System 80)	0.4417	38.10
17×17	WE Standard	0.4671	40.18

Table 4.4.5-2 PWR Canister Free Volume (No Fuel or Inserts)

Canister Class	1	2	3
Basket Volume (in^3)	69800	74490	77460
Canister Height (inch)	175.05	184.15	191.75
Canister Free Volume w/o Fuel (liter)	7970	8400	8770

Table 4.4.5-3 PWR Maximum Normal Condition Pressure Summary

Canister Class	Fuel Type	Pressure (psig)
Class 1	WE 17×17 Standard	4.20
Class 2	B&W 17×17 Mark C	4.21
Class 3	CE 16×16 System 80	4.11

assembly with this configuration. The thermal performance of these fuel assemblies is bounded by that of the standard fuel assemblies.

4.5.1.1.6 Standard Fuel Assemblies with Variable Enrichment and Axial Blankets

The Maine Yankee variably enriched fuel assemblies are limited to two batches of fuel, which have a maximum burnup less than 30,000 MWD/MTU. The variably enriched rods in the fuel assemblies have enrichments greater than 3.4 wt % ^{235}U, except that the axial blankets on one batch are enriched to 2.6 wt % ^{235}U. As shown in Table B2-8 of Appendix B, fuel at burnups less than or equal to 30,000 MWD/MTU with any enrichment greater than, or equal to, 1.9 wt % ^{235}U may be loaded with 5 years cool time.

The thermal conductivities of the fuel assemblies with variable enrichment (radial) and axial blankets are considered to be essentially the same as those of the standard fuel assemblies. Since the heat load per assembly is limited to the design basis heat load, there is no effect on the thermal performance of the system due to this loading configuration.

4.5.1.1.7 Standard Fuel Assemblies with Removed Fuel Rods

Except for assembly number EF0046, the maximum number of missing fuel rods from a standard fuel assembly is 14, or 8% (14/176) of the total number of rods in one fuel assembly. The maximum heat load for any one of these fuel assemblies is conservatively determined to be 0.63 kW. This heat load is 34% less than the design basis heat load of 0.958 kW. Fuel assembly EF0046 was used in the consolidated fuel demonstration program and has only 69 rods remaining in its lattice. This fuel assembly has a heat load of 70 watts, or 7% of the design basis heat load of 0.958 kW. Therefore, the thermal performance of fuel assemblies with removed fuel rods is bounded by that of the standard fuel assemblies.

4.5.1.1.8 Fuel Assemblies with Damaged Fuel Rods

Damaged fuel assemblies are standard fuel assemblies with fuel rods with known or suspected cladding defects greater than hairline cracks or pinhole leaks. Fuel, classified as damaged, will be placed in one of the two configurations of the Maine Yankee Fuel Can. The primary function of the fuel can is to confine fuel material within the can and to facilitate handling and retrievability. The Maine Yankee fuel can is shown in Drawings 412-501 and 412-502. The placement of the loaded fuel cans is restricted by the operating procedures and/or Technical

Specifications to loading into the four corner positions at the periphery of the fuel basket as shown in Figure B2-1. The heat load for each damaged fuel assembly is considered to be the design basis heat load of 0.958 kW (23 kW/24).

A steady-state thermal analysis is performed using the three-dimensional canister model described in Section 4.4.1.2 simulating 100% failure of the fuel rods, fuel cladding, and guide tubes of the damaged fuel held in the Maine Yankee fuel can. The canister is assumed to contain twenty (20) design basis PWR fuel assemblies and damaged fuel assemblies in fuel cans in each of the four corner positions.

Two debris compaction levels are considered for the 100% failure condition: (Case 1) 100% compaction of the fuel rod, fuel cladding, and guide tube debris resulting in a 52-inch debris level in the bottom of each fuel can, and (Case 2) 50% compaction of the fuel rod, fuel cladding, and guide tube debris resulting in a 104-inch debris level in the bottom of each fuel can. The entire heat generation rate for a single fuel assembly (i.e., 0.958 kW) is concentrated in the debris region with the remainder of the active fuel region having no heat generation rate applied. To ensure the analysis is bounding, the debris region is located at the lower part of the active fuel region in lieu of the bottom of the fuel can. This location is closer to the center of the basket where the maximum fuel cladding temperature occurs. The effective thermal conductivities for the design basis PWR fuel assembly (Section 4.4.1.5) are used for the debris region. This is conservative since the debris (100% failed rods) is expected to have higher density (better conduction) and more surface area (better radiation) than an undamaged fuel assembly. In addition, the thermal conductivity of helium is used for the remainder of the active fuel length. Boundary conditions corresponding to the normal condition of storage are used at the outer surface of the canister model (see Section 4.4.1.2). A steady-state thermal analysis is performed. The results of the thermal analyses performed for 100% fuel rod, fuel cladding, and guide tube failure are:

Description	Maximum Temperature (°F)			
	Fuel Cladding	**Damaged Fuel**	**Support Disk**	**Heat Transfer Disk**
Case 1 (100% Compaction)	654	672	598	594
Case 2 (50% Compaction)	674	594	620	616
Design Basis PWR Fuel	670	N/A	615	612
Allowable	752	N/A	650	650

22. Hagrman, D.L., Reymann, G.A., "Matpro-Version 11 A Handbook of Material Properties for Use in the Analysis of Light Water Reactor Rod Behavior," Idaho Falls, ID, EG&G Idaho, Inc., 1979.

23. Rust, J.H., "Nuclear Power Plant Engineering," Atlanta, GA, S.W., Holland Company, 1979.

24. AAR BORAL Sheet Manufacturers Data, Sheet Product Performance Report 624, Brooks & Perkins Advanced Structures Company, 1983.

25. AAR Standard Specification Sheet for BORAL™ Composite Sheet, Brooks & Perkins Advances Structures Company, BRJREVO-940107.

26. Fintel, M., "Handbook of Concrete Engineering," 2nd Edition, Van Nostrand Reinhold Co., New York.

27. ASTM C150-95a, American Society for Testing and Materials, "Standard Specification for Portland Cement."

28. Siegel, R., and Howell, J. R., "Thermal Radiation Heat Transfer," 3rd Edition, Hemisphere Publishing Co., 1992.

29. Incropera, E. P., and DeWitt, D. P., "Fundamentals of Heat and Mass Transfer," 4th Edition, 1996.

30. SAND90-2406, Sanders, T.L., et al., "A Method for Determining the Spent-Fuel Contribution to Transport Cask Containment Requirements," TTC-1019, UC-820, November 1992.

31. Olander, D. R., "Fundamental Aspects of Nuclear Reactors Fuel Elements," Technical Information Center (U. S. Department of Energy), 1985.

32. Kreith, F., "Principles of Heat Transfer," 2nd Edition, 1965.

33. PNL-6364, "Control of Degradation of Spent LWR Fuel During Dry Storage in an Inert Atmosphere," Pacific Northwest Laboratory, Richland, Washington, October 1987.

34. PNL-4835, "Technical Basis for Storage of Zircaloy-Cladding Spent Fuel in Inert Gas," September 1983.

35. Regulatory Guide 1.25, "Assumptions Used for Evaluating the Potential Radiological Consequences of a Fuel Handling Accident in the Fuel Handling and Storage Facility for Boiling and Pressurized Water Reactors (Safety Guide 25)," March 1972.

36. Pati, S.R., Garde, A. M., Clink, L.J., "Contribution of Pellet Rim Porosity to Low-Temperature Fission Gas Release at Extended Burnups," American Nuclear Society Topical Meeting on LWR Fuel Performance, April 17-20, 1988, Williamsburg, VA.

37. NET 152-03, "METAMIC Qualification Program for Nuclear Fuel Storage Applications – Final Test Results," Revision 0, Northeast Technology Corporation, September 2001.

38. Nuclear Regulatory Commission, "Cladding Considerations for Transportation and Storage of Spent Fuel," Interim Staff Guidance – 11, Revision 3.

39. F. Kammenzind, B. M. Berquist and R. Bajaj, "The Long Range Migration of Hydrogen Through Zircaloy in Response to Tensile and Compressive Stress Gradients," Zirconium in the Nuclear Industry: Twelfth International Symposium, ASTM STP 1354, G.P. Sabol and G.D. Moan, Eds., American Society for Testing and Materials, pp. 196-233, 2000.

Chapter 5

Neutron shielding evaluations for fissile material must account for subcritical multiplication (neutron production) inside the system being evaluated. This subcritical multiplication may be taken into account either by directly calculating the additional neutron source during the Monte Carlo simulation, as done in MORSE, or by adjusting the input neutron source term or output dose result by a scale factor. The code module in MCBEND responsible for accelerating result convergence by importance biasing does not efficiently account for subcritical multiplication. Code biasing is set to optimize the speed at which cask surface dose rates are obtained. Thermal energy neutrons within the fuel region are not likely to escape the shielded storage system and tend to be biased out of the evaluation. However, the thermal neutrons account for a significant portion of the subcritical multiplication. Removing the thermal neutrons from the system by biasing for cask surface dose, therefore, undersamples the subcritical multiplication. To account for undersampling, neutron source rates are scaled by a subcritical multiplication factor based on the system multiplication factor, k_{eff}:

$$\text{Scale Factor} = \frac{1}{1 - k_{eff}}$$

For dry cask conditions, the system k_{eff} is taken as 0.4, with a resulting scale factor of 1.67. The scale factor is applied in MCBEND input as a component to the source strength in Unit 15 (source strength).

5.2.3 PWR Fuel Assembly Descriptions

The radiation source in the Universal Storage System consists of 24 design basis PWR spent fuel assemblies. The design basis PWR fuel has an average burnup of 40,000 MWd/MTU, an initial enrichment of 4.2 wt % ^{235}U, and a post-irradiation cooling time of 5 years and includes source contributions from an activated burnable absorber assembly. However, to bound the neutron source produced by lower enrichment fuel which may achieve this burnup, the design basis PWR source terms are calculated with an initial enrichment of 3.7 wt % ^{235}U. This assumption produces a neutron source 30% higher than that obtained by assuming 4.2 wt % ^{235}U initial enrichment. Assembly power density and cycle parameters are selected such that the assembly is activated at a power level 5% greater than a typical PWR assembly to allow for assembly power peaking during core residence. This treatment results in conservatively higher source rates due to enhanced actinide production and a shorter activation period.

Source spectra and source region elevations are determined for the four major PWR fuel assembly types (see Table 5.2-1):

PWR Assembly Type	Class
Westinghouse 15×15 Std	Class 1
Westinghouse 17×17 Std	Class 1
Babcock & Wilcox 15×15 Mark B	Class 2
Combustion Engineering 16×16 System 80	Class 3

These assembly types are referred to by the abbreviated names given in Table 5.2-1. Based on their initial heavy metal loading, these assemblies produce the limiting source terms for the specified design basis burnup of 40,000 MWd/MTU. Fuel assembly physical characteristics are given in Table 5.2-2, and hardware masses are given in Table 5.2-3. The results of the source term analysis for the fuel types given here are summarized in Table 5.2-4. Fuel assembly activated hardware source terms are shown in Table 5.2-5. These non-fuel source terms are determined on the basis of the hardware source per kilogram given in Table 5.2-4 and the hardware masses given in Table 5.2-3. The hardware activation is based on a stainless steel Type 304 composition with an assumed ^{59}Co impurity level of 1.2 g/kg. A sketch of the WE 17×17 fuel assembly source region elevations is shown in Figure 5.2-5. Additional assembly detail is employed in the MCBEND assembly models. Three-dimensional parameters for the MCBEND fuel assembly model are shown in Table 5.2-27.

In order to account for spectral differences in the activating neutron flux, a flux ratio of 0.2 is applied to hardware regions directly adjacent to the active core region, i.e., the lower end-fitting and upper plenum. A flux ratio of 0.1 is applied to the upper end-fitting region, except for the CE 16×16 upper end-fitting for which a 0.05 flux ratio is used. The lower end fitting region in the BW 15×15 fuel assembly model uses a 0.1 flux ratio since the model explicitly includes a lower plenum region adjacent to the fuel region. This lower plenum region in the BW 15×15 assembly is activated with a 0.20 flux ratio. The ORIGEN-S code is used directly to calculate hardware activation spectra by activating the fuel assembly components in the SAS2H-calculated flux spectrum for each assembly type.

Sources for fuel assemblies at enrichment, burnup and initial cool times different from those discussed in this section are generated within the Section 5.5 minimum cool time matrix determinations. The 40 GWd/MTU sources described in this section produce system maximum dose rates, as cool times are adjusted for any other burnup limit to produce dose rates not to exceed the 40 GWd/MTU design basis values.

5.2.4 BWR Fuel Assembly Descriptions

The Universal Storage System can store up to 56 undamaged BWR fuel assemblies. BWR fuel is analyzed on the basis of 3.25 wt % ^{235}U initial enrichment, 40,000 MWd/MTU average burnup, and a post-irradiation cooling time of 5 years. Assembly power density and cycle parameters are selected such that the assembly is activated at a power level 10% greater than a typical BWR assembly to allow for assembly power peaking during core residence. This treatment results in conservatively higher source rates due to enhanced actinide production and a shorter activation period.

Source term spectra and source region elevations are determined for the major BWR fuel assembly types (see Table 5.2-1):

BWR Assembly Type	Class
GE 7×7 BWR/2-3 version GE-2b	Class 4
GE 8×8 BWR/2-3 version GE-5, 2 water holes	Class 4
GE 8×8 BWR/2-3 version GE-10, 1 large water hole	Class 4
GE 7×7 BWR/4-6 version GE-2	Class 5
GE 8×8 BWR/4-6 version GE-5, 2 water holes	Class 5
GE 8×8 BWR/4-6 version GE-10, 1 large water hole	Class 5
GE 9×9 BWR/4-6 version GE-11, 2 water holes, 79 fuel rods	Class 5

These assembly types are referred to by the abbreviated names given in Table 5.2-1. The abbreviated name of each BWR class assembly includes a suffix designation indicating the reactor type. The "S" designation corresponds to BWR/2-3 class reactors, and the "L" designation corresponds to BWR/4-6 class reactors. The physical characteristics of the two classes of BWR fuel are given in Table 5.2-6 and Table 5.2-7. For fuel assemblies with an average burnup of 40,000 MWd/MTU, the fuel requires a minimum of 5 years of cooling after discharge to meet the radiation source rate values specified in Table 5.2-8 and Table 5.2-9. The GE BWR/2-3 8×8 fuel assembly designs are analyzed on the basis of a 144-inch active fuel length in order to provide a consistent basis for comparison with the other BWR/2-3 fuel assembly designs. The GE-2b version of the GE BWR/2-3 7×7 fuel assembly is selected over the older GE-2a design since it has been discharged more recently, although the GE-2a assembly has a marginally higher (0.4%) initial heavy metal loading. A sketch of the GE 9×9-2L fuel assembly source region elevations is shown in Figure 5.2-6. Additional assembly detail is employed in the MCBEND assembly models. Three-dimensional parameters for the MCBEND fuel assembly model are shown in Table 5.2-27.

Sources for fuel assemblies at enrichment, burnup and initial cool times different from those discussed in this section are generated within the Section 5.5 minimum cool time matrix determinations. The 40 GWd/MTU sources described in this section produce system maximum dose rates, as cool times are adjusted for any other burnup limit to produce dose rates not to exceed the 40 GWd/MTU design basis values.

5.2.5 Design Basis Fuel Assemblies

For the shielding analysis, the WE 17×17 and GE 9×9-2L fuel assembly types are selected as the design basis PWR and BWR fuel assemblies, respectively. These assembly designs are selected on the basis of the one-dimensional shielding analysis results for both the storage and standard transfer casks. Standard transfer cask results are presented in Table 5.2-10 through Table 5.2-15. Similar results are obtained for the storage cask one-dimensional analysis. To facilitate comparison, the results for each fuel assembly type are shown on a normalized basis relative to the design basis fuel assembly dose rates. With the exceptions discussed below, the computed dose rates vary over a narrow range.

In the PWR case, the inclusion of source terms from fuel assembly control components (i.e., burnable poison clusters) causes the WE 15×15 assembly to give slightly higher dose rates than the WE 17×17 assembly. However, the WE 17×17 is limiting with respect to dose rate delivered by fuel neutron and fuel gamma sources alone. Hence, in order to develop a single limiting fuel description, the WE 17×17 upper end-fitting and fuel hardware source rates are scaled to match the WE 15×15 values. This scaling results in a 35% increase in the WE 17×17 end-fitting source rate and a 17% increase in the fuel hardware source rate. Both of these source rate increases are considered in the SCALE and MCBEND evaluations. In the SCALE analysis, no corresponding adjustment is made to material smear densities; the MCBEND analysis takes credit for the additional self-shielding as shown by the activated hardware inventory in Table 5.2-30.

Five-year cooled source spectra for the PWR design basis WE 17×17 fuel assembly are shown in Table 5.2-16 through Table 5.2-18.

In the BWR case, the GE 7×7 BWR/2–3 and GE 7×7 BWR/4–6 fuel assembly types show the highest radial model dose rates. However, these assemblies are not considered as design basis assemblies because they are no longer in common use, and the U.S. spent fuel inventory does not contain a significant number of these assemblies with burnup, initial enrichment, and decay time combinations leading to source rates as high as those of the GE 9×9-2L [10].

In a manner similar to the PWR case, the GE 9×9-2L assembly represents the bounding case with respect to dose rate delivered by fuel neutron and fuel gamma sources, but the inclusion of additional non-fuel hardware sources leads to higher overall dose rates from the GE 8×8-4L assembly. Again, a bounding characterization is achieved by scaling the GE 9×9-2L upper end fitting, lower end fitting, and fuel hardware source terms to match the GE 8×8-4L values. As for the PWR models, both the SCALE and MCBEND analyses have scaled source terms, while the MCBEND analysis takes credit for the self-shielding of the additional mass as shown in Table 5.2-30. A summary of non-fuel hardware scale factors is provided in Table 5.2-24. These scale factors are included in the MCBEND analysis by increasing the activated mass as shown in Table 5.2-30.

Five-year cooled source spectra for the BWR design basis GE 9×9-2L fuel assembly are shown in Table 5.2-19 through Table 5.2-21.

5.2.6 Axial Profiles

5.2.6.1 Axial Burnup Profile

For PWR fuel with burnup exceeding 30 GWd/MTU, an enveloping axial burnup profile with a 1.08 uniform peaking factor can be justified on the basis of calculated PWR data from Seabrook Station and Maine Yankee and from measured Turkey Point gamma data [16,17,18,19,20]. This normalized enveloping shape is shown in Figure 5.2-1. A uniform burnup peaking factor of 1.08 is applied between 15% and 85% of core height. Above and below these elevations, the relative burnup/decay heat decreases linearly to 0.547 at the top and bottom of the active fuel region.

For BWR fuel with burnup exceeding 30 GWd/MTU, an enveloping burnup profile with a 1.22 maximum peaking factor can be justified on the basis of calculated BWR data from Washington Public Power BWR/4-6 data [21]. This normalized enveloping shape is shown in Figure 5.2-2. Uniform peaking factors of 1.22 and 1.18 are applied from 15% to 55% and from 55% to 80% of core height, respectively. Above and below these elevations, the burnup profile decreases linearly to 0.043 at the top and bottom of the active fuel region.

5.2.6.2 Axial Source Profile

In the three-dimensional analyses, axial radiation source rate profiles are related to the axial burnup profile described in the previous section. Source rates are assumed to vary with burnup according to:

$$S = aB^b$$

where "S" is the source rate for a particular radiation type, "B" is the burnup at a given axial elevation, "a" is a normalization factor, and "b" is the exponent given in Table 5.2-22 for each radiation type. The exponent "b" is determined from fits to SAS2H-computed source rates at various burnups for both PWR and BWR fuels. The numeric value of "a" is not computed explicitly.

Neutron source is not proportional to burnup. Therefore, the axially integrated source is not equal to the source at the average burnup. MCBEND directly applies the source profile as axial source scaling factors. By default, SAS4 normalizes the source profile, and the scaling factor is applied to the source magnitude. This scaling factor "r" relates the total source rate (SAS4 input parameter) to the source rate at the average burnup (as computed from SAS2H analyses).

$$r = \frac{\overline{S}}{S(\overline{B})} = \frac{\frac{a}{H}\int B^b dz}{a\overline{B}^b}$$

where "H" is the height of the fuel region. With the burnup profile normalized to unity, this becomes:

$$r = \frac{1}{H}\int B^b dz\,.$$

The integral is evaluated numerically by using the trapezoid rule, and the resulting scale factors are shown in Table 5.2-23 for PWR and BWR neutron source rates. The scale factor for gamma sources is 1.0 because the computed relation between gamma source rate and burnup is linear.

The fuel neutron and fuel gamma source rate profile for the design basis PWR fuel assembly is tabulated in Table 5.2-25 and shown graphically in Figure 5.2-3. Corresponding BWR profiles are given in Table 5.2-26 and Figure 5.2-4.

In the BWR case, the axial source profiles are asymmetric with respect to the fuel axial midplane. To ensure that the correct total source is modeled in each SAS4 half model, a scale factor is computed which relates the actual source rate in each half model to the total assembly source rate. These values are shown in Table 5.2-24. This scaling is necessary in order that cask features located near the top or bottom of the cask are modeled correctly.

The results of the one-dimensional dose rate calculations indicate that bounding, conservative PWR and BWR source descriptions are achieved by scaling the design basis WE 17×17 and GE 9×9-2L non-fuel hardware gamma source rates to match the corresponding WE 15×15 and

loading pattern, permitting 1.05 kW per peripheral assembly, reduces the minimum cool time based on thermal constraints to 6 years. The storage cask dose rate constraint is satisfied for the preferentially loaded assembles after 5 years cooling. Recognizing that only two of the assemblies in the Maine Yankee spent fuel inventory, R439 and R444, require peripheral loading, the transfer cask dose rate limit is not applied for these two assemblies. Since the dose rate comparisons are made on the basis of an assumed fuel cask of assemblies, the transfer cask dose rate limit is unnecessarily restrictive.

5.6.1.4.4 Consolidated Fuel

There are two consolidated fuel lattices intended for storage (and transfer) in the Universal Storage Cask. The lattices house fuel rods taken from assemblies as shown in Table 5.6.1-6. This fuel has decayed for over twenty years and does not represent a significant shielding issue.

A limiting cool time analysis is conducted by identifying a fuel assembly description analyzed in the loading table analysis that bounds the parameters of the fuel rods in the consolidated fuel lattices. The parameters of those fuel rods are shown in Table 5.6.1-15. The CE 14×14 fuel at 30,000 MWd/MTU and 1.9 wt % ^{235}U enrichment represents a bounding assembly type, since it has a significantly higher burnup and a lower enrichment than the original assemblies. This fuel requires 6-year cool time before it can be loaded in the storage or transfer cask as shown in Table 5.6.1-10. The consolidated fuel has been cooled for at least 24 years. For container CN-1 lattice, one can immediately conclude that dose rates are bounded by the limiting fuel.

However, the CN-10 lattice contains significantly more fuel rods than an undamaged assembly. Neglecting the mitigating effects of additional self-shielding, this situation is addressed by comparing the radiation source strength of the limiting fuel at six- and 24-year cool time. Conservatively assuming that all fuel rods present in CN-10 are at the limiting conditions of 30,000 MWd/MTU and 1.9 wt % ^{235}U, the ratio of the source rate in the CN-10 to the source rate in the limiting fuel assembly is shown to be less than one for each source type in Table 5.6.1-16. For each source type, the ratio is computed as:

Ratio = (Num Rods in CN-10)(Source Rate at 24 Yr) / (Num Rods in F/A)(Source Rate at 6 Yr)

Hence, CN-10 is also bounded by the limiting case as of January 1, 2001.

5.6.1.4.5 Damaged Fuel and Fuel Debris

The Maine Yankee spent fuel inventory includes fuel assemblies containing damaged fuel rods and fuel debris. Damaged fuel rods and fuel debris will be placed into one of the two configurations of the screened Maine Yankee Fuel Can prior to loading in the UMS® basket. Maine Yankee fuel cans are restricted to loading into one of the four corner basket locations. The damaged fuel mass cannot exceed the fuel mass of 100% of an undamaged fuel assembly. Damaged fuel rods may be loaded in the can with undamaged rods.

To approximate the effect of collapsed fuel inside the Maine Yankee fuel can, a three-dimensional shielding analysis was performed doubling the source magnitude and material density in the four corner basket locations. Conservatively, the screened can itself is not included in the shielding model. As expected, the increased self-shielding of the collapsed fuel material minimizes the dose rate increase resulting from the source term density doubling. Based on a cask average surface dose rate of less than 40 mrem/hr under normal operating conditions, no significant increases in personnel exposures are expected as a result of the collapsed fuel material.

Where no collapse of the fuel rods occurs, the analysis presented for the undamaged fuel assemblies bounds that of the damaged fuel rods. Since the additional shielding provided by the screened canister is not being credited by this approach, the actual expected dose rates will be lower for the transportable storage canisters loaded with damaged fuel. For cases in which the Maine Yankee fuel can holds fuel rods from multiple assemblies, the minimum cool time for the rods containing the most restrictive enrichment and burnup combination is applied to the contents of the entire can.

Fuel debris must be placed into a rod structure prior to loading into the screened canister. Once the fuel debris is configured in a rod structure it can be treated from a shielding perspective identical to the damaged fuel rods.

5.6.1.4.6 Additional Nonfuel and Neutron Source Material

The additional nonfuel material consists of:

1. Three plutonium-beryllium (Pu-Be) neutron sources, two irradiated and one unirradiated.
2. Two antimony-beryllium (Sb-Be) neutron sources, both irradiated.

Chapter 6

Table of Contents

6.0 CRITICALITY EVALUATION 6.1-1

6.1 Discussion and Results 6.1-1

6.2 Spent Fuel Loading 6.2-1

6.3 Criticality Model Specification 6.3-1
- 6.3.1 Calculational Methodology 6.3-1
- 6.3.2 Model Assumptions 6.3-3
- 6.3.3 Description of Calculational Models 6.3-5
- 6.3.4 Cask Regional Densities 6.3-7
  - 6.3.4.1 Active Fuel Region 6.3-8
  - 6.3.4.2 Cask Material 6.3-8
  - 6.3.4.3 Water Reflector Densities 6.3-9

6.4 Criticality Calculation 6.4-1
- 6.4.1 Calculation or Experimental Method 6.4-1
  - 6.4.1.1 Determination of Fuel Arrays for Criticality Analysis 6.4-1
  - 6.4.1.2 Most Reactive Fuel Assembly Determination 6.4-2
  - 6.4.1.3 Transfer Cask and Vertical Concrete Cask Criticality Analysis 6.4-4
- 6.4.2 Fuel Loading Optimization 6.4-11
- 6.4.3 Criticality Results 6.4-11
  - 6.4.3.1 Summary of Maximum Criticality Values 6.4-11
  - 6.4.3.2 Criticality Results for PWR Fuel 6.4-14
  - 6.4.3.3 Criticality Results for BWR Fuel 6.4-15
- 6.4.4 Fuel Assembly Lattice Dimension Variations 6.4-16
- 6.4.5 PWR and BWR Fuel Assembly Specific Maximum Initial Enrichments 6.4-18
  - 6.4.5.1 PWR Maximum Initial Enrichment – No Soluble Boron 6.4-18
  - 6.4.5.2 PWR Storage Cask Result Verification 6.4-18
  - 6.4.5.3 BWR Maximum Initial Enrichment – No Soluble Boron 6.4-19
- 6.4.6 PWR Soluble Boron Credit Evaluation 6.4-19
  - 6.4.6.1 Maximum Reactivity Geometry 6.4-19
  - 6.4.6.2 Soluble Boron and Moderator Density Study 6.4-20
  - 6.4.6.3 Maximum Allowed Initial Enrichment Search 6.4-20

Table of Contents (Continued)

6.5 Critical Benchmark Experiments 6.5-1
6.5.1 SCALE 4.3 Benchmark Experiments and Applicability 6.5-1
6.5.1.1 Description of Experiments 6.5-3
6.5.1.2 Applicability of Experiments 6.5-3
6.5.1.3 Results of Benchmark Calculations 6.5-4
6.5.1.4 Trends 6.5-5
6.5.1.5 Comparison of NAC Method to NUREG/CR-6361 – SCALE 4.3 ..... 6.5-6
6.5.2 MONK Validation in Accordance with NUREG/CR-6361 ..... 6.5-26

6.6 Criticality Evaluation for Site Specific Spent Fuel 6.6-1
6.6.1 Criticality Evaluation for Maine Yankee Site Specific Spent Fuel 6.6.1-1
6.6.1.1 Maine Yankee Fuel Criticality Model 6.6.1-1
6.6.1.2 Maine Yankee Undamaged Spent Fuel 6.6.1-2
6.6.1.3 Maine Yankee Damaged Spent Fuel and Fuel Debris 6.6.1-7
6.6.1.4 Fuel Assemblies with a Source or Other Component in Guide Tubes 6.6.1-9
6.6.1.5 Maine Yankee Fuel Comparison to Criticality Benchmarks 6.6.1-11

6.7 References 6.7-1

6.8 CSAS Inputs 6.8-1

6.0 CRITICALITY EVALUATION

This chapter documents the criticality evaluation of the Universal Storage System with either PWR or BWR contents. The results demonstrate that the effective neutron multiplication factor, k_{eff}, of the Universal Storage System under normal, off-normal, and accident conditions, is less than 0.95 including biases and uncertainties. The system design therefore meets the criticality requirements of 10 CFR 72.124(a) [1], 10 CFR 72.236(c), and Chapter 6 of NUREG-1536 [2].

6.1 Discussion and Results

The Universal Storage System consists of a Transportable Storage Canister, a transfer cask and a Vertical Concrete Cask. The system is designed to safely store up to 24 undamaged PWR fuel assemblies or 56 undamaged BWR fuel assemblies. Maximum initial enrichment for each PWR and BWR fuel assembly grouping, as a function of the assemblies' key parameters, is shown in Tables 6.1-1 and 6.1-2. For PWR fuel assemblies, the maximum allowable enrichment ranges from 4.2 wt. % to 5.0 wt. % without any soluble boron. With at least 1000 ppm of soluble boron, the maximum allowable enrichment is 5.0 wt. % for all PWR assemblies. Maximum initial enrichment is defined as peak rod enrichment for PWR assemblies and the maximum initial peak planar-average enrichment for BWR assemblies. The maximum initial peak planar-average enrichment is the maximum planar-average enrichment at any height along the axis of the fuel assembly. For BWR fuel assemblies, the maximum enrichment allowed ranges from 4.4 wt. % to 4.8 wt. %.

Primarily on the basis of their lengths and cross-sections, the fuel assemblies are categorized into classes. Three classes of PWR fuel assemblies and two classes of BWR fuel assemblies are evaluated for storage. Five Transportable Storage Canister assemblies of different lengths and configuration are designed to store the three classes of PWR fuel assemblies and the two classes of BWR fuel assemblies. The canister is comprised of a stainless steel canister and a fuel basket within which fuel is loaded. The canister is loaded into the Vertical Concrete Cask for storage. The length of the Vertical Concrete Cask also varies depending upon the type of the canister it is designed to store.

A transfer cask is used for handling the canister during loading of spent fuel. Fuel is loaded into the canister contained within the transfer cask underwater in the spent fuel pool. Once loaded with fuel, the canister is drained, dried, inerted, and welded shut. The transfer cask is then used to transfer the canister into and out of the concrete cask or shipping cask. The transfer cask provides shielding during the canister loading and transfer operations.

The PWR transfer cask is designed in two configurations, standard and advanced. The advanced design is identical to the standard design with the exception of a trunnion support plate. This plate has no impact on system reactivity. Therefore, all analysis of the standard transfer cask applies to the advanced transfer cask.

Under normal conditions, such as loading in a spent fuel pool, moderator (water) is present in the canister while it is in the transfer cask. Also, during draining and drying operations, moderator with varying density is present. Thus, the criticality evaluation of the transfer cask includes a variation in moderator density and a determination of optimum moderator density. Off-normal and accident conditions are bounded by assuming the most reactive mechanical basket configuration as well as moderator intrusion into the fuel cladding (i.e., 100% fuel failure).

Under normal and accident conditions, moderator is not present in the canister while it is in the concrete cask. However, access to the environment is possible via the air inlets in the concrete cask and the convective heat transfer annulus between the canister and the cask steel liner. This access provides paths for moderator intrusion during a flood. Under off-normal conditions, moderator intrusion into the convective heat transfer annulus is evaluated. For the initial evaluation without soluble boron credit, under hypothetical accident conditions, it is assumed that the canister confinement fails, and moderator intrusion into the canister and into the fuel cladding (100% fuel failure) is evaluated. This is a conservative assumption, since normal, off-normal and design basis accident analysis shows that the confinement boundary remains undamaged. Therefore, there are no circumstances under which there would be water in the canister. In the PWR soluble boron evaluation, credit is taken for the dry canister. For this configuration, a wet transfer cask containing a canister filled with a water/soluble boron mixture and a dry canister in a concrete cask are assumed.

Criticality control in the PWR basket is achieved by using a flux trap, or a combination flux trap and soluble neutron absorber (boron). Individual fuel assemblies are held in place by fuel tubes surrounded by four neutron absorber sheets. The neutron absorber modeled is a borated aluminum neutron absorber. Any similar material meeting the ^{10}B areal density and physical dimension requirement will produce similar reactivity results. A stainless steel cover holds the neutron absorber sheets in place. The fuel tubes are separated by a gap that is filled with water when the canister is flooded. Fast neutrons escaping one fuel assembly are moderated in the water gap and are absorbed by the neutron absorber between the assemblies before they can cause a fission in the adjacent assembly. The flux trap gap spacing is maintained by the basket's stainless steel support disks, which separate individual fuel assembly tubes. Alternating stainless steel disks and aluminum heat transfer disks are placed axially at intervals determined by thermal and structural constraints. The PWR basket design includes 30, 32, or 34 support disks and 29, 31, or 33 heat transfer disks, respectively. The minimum loading of the neutron absorber sheets

6.6.1 Criticality Evaluation for Maine Yankee Site Specific Spent Fuel

In Section 6.4, loading the storage cask with the standard CE 14 × 14 fuel assembly is shown to be less reactive than loading the cask with the most reactive Westinghouse 17 × 17 OFA design basis spent fuel. This analysis addresses variations in fuel assembly dimensions, variable enrichment axial zoning patterns, annular axial fuel blankets, removed fuel rods or empty rod positions, fuel rods placed in guide tubes, fuel assemblies with a start-up source or other components in a guide tube, consolidated fuel assemblies, and damaged fuel and fuel debris. These configurations are not included in the standard fuel analysis, but are present in the site fuel inventory that must be stored.

6.6.1.1 Maine Yankee Fuel Criticality Model

The criticality evaluations of the Maine Yankee fuel inventory require the basket cell and basket in cask models described in Section 6.3 and 6.4. The basket cell model is principally employed in the most reactive dimension evaluation for the Maine Yankee undamaged fuel types. The basket cell model represents an infinite array of fuel tubes separated by one-inch flux traps and neglects the radial neutron leakage of the basket. This will result in k_{eff} values greater than 0.95. The basket cell model is, therefore, only used to determine relative reactivities of the various physical dimensions of the Maine Yankee fuel inventory, not to establish maximum k_s values for the basket loaded with Maine Yankee fuel assemblies. The basket-in-cask model is used for the evaluation of the remaining fuel configurations. The basket criticality model uses the nominal basket configuration with full moderation under accident conditions, where accident conditions implying the loss of fuel cladding integrity and flooding of the pellet to cladding gap in all fuel rods. The analyses presented are performed using the UMS® transport cask shield geometry. Based on the evaluation presented in Section 6.4 and the licensing analysis of the transport overpack, the most reactive transportable storage canister configuration is independent of the canister outer shell geometry (i.e., different casks – transport, transfer, or storage). Since the criticality evaluation is not sensitive to the shielding geometry outside of the canister, this result is applicable to the concrete storage cask and the transfer cask. The transport cask criticality model is identical to the transfer cask and storage cask models with the exception that the radial shielding outside of the canister is comprised of a total of 4.75 inches of steel, 2.75 inches of NS-4-FR neutron shielding and 2.75 inches of lead. The $k_{eff} + 2\sigma$ of this configuration is 0.9210, which is slightly lower than the wet gap $k_{eff} + 2\sigma$ values of 0.9238 and 0.9234 reported in Tables 6.4-6 and 6.4-7 for the transfer cask and storage cask, respectively.

6.6.1.2 Maine Yankee Undamaged Spent Fuel

The evaluation of the undamaged Maine Yankee spent fuel inventory demonstrates that, under all conditions, the maximum reactivity of the UMS® basket loaded with Maine Yankee fuel assemblies is bounded by the Westinghouse 17 × 17 OFA evaluation presented in Section 6.4. The undamaged fuel assembly evaluation includes the determination of maximum reactivity dimensions of the Maine Yankee fuel assemblies, and the reactivity effects of variably enriched assemblies, annular axial end blankets, removed rods, fuel in guide tubes, and consolidated fuel assemblies. Where necessary, loading restrictions are applied to limit the number and location of the basket payload evaluated.

6.6.1.2.1 Fuel Assembly Lattice Dimensional Variations

Maine Yankee 14 × 14 PWR fuel has been provided by Combustion Engineering, Exxon/ANF, and Westinghouse. The range of fuel assembly dimensions evaluated for Maine Yankee is shown in Table 6.6.1-1. Bounding fuel assembly dimensions are determined using the guidelines presented in Section 6.4.4 and are reported in Table 6.6.1-2. The dimensional perturbations that can increase the reactivity of an undermoderated array of fuel assemblies in a flooded system (including flooding the fuel-cladding gap) are:

- Decreasing the cladding outside diameter (OD)
- Increasing the cladding inside diameter (ID) (i.e., increasing the gap)
- Decreasing the pellet diameter
- Decreasing the guide tube thickness

To conservatively model the cladding thickness of the Maine Yankee standard fuel, the outside diameter of the cladding is decreased until the cladding thickness reaches the minimum. The pellet diameter is studied separately to determine which diameter maximizes the reactivity of the assembly. This study is performed using an infinite array of hybrid 14 × 14 fuel assemblies. These hybrid assemblies have the combination of the most reactive dimensions listed in Table 6.6.1-2 and are used in the evaluation of site specific fuel configurations as described in the following sections. The pellet diameter is modeled first at the maximum diameter; then it is iteratively decreased until a peak reactivity (H/U ratio) is reached. The results of this study are reported in Table 6.6.1-3. The maximum reactivity occurs at a pellet diameter of 0.3527 inches. This pellet diameter is conservatively used in the analyses of an assembly with 176 fuel rods.

This case represents the bounding number and geometry of removed fuel rods for the Maine Yankee fuel assemblies. It results in a more reactive system than either the Maine Yankee hybrid 14 × 14 fuel accident case or the Westinghouse 17 × 17 OFA accident case assuming unrestricted loading. However, as shown in Table 6.6.1-6, when the loading of any assembly with less than 176 fuel rods or filler rods is restricted to the four corner fuel tubes, the reactivity of the worse case drops well below that of the Westinghouse 17 × 17 OFA fuel assemblies. Therefore, loading of Maine Yankee fuel assemblies with removed fuel rods, or with hollow zirconium alloy tubes, is restricted to the four corner fuel tube positions of the basket. With this loading restriction, the Westinghouse 17 × 17 OFA criticality evaluation remains bounding.

6.6.1.2.5 Assemblies with Fuel Rods in the Guide Tubes

A few of the Maine Yankee undamaged assemblies may contain up to two undamaged fuel rods in some of the guide tubes (i.e., allowing for the potential storage of individual undamaged fuel rods in an undamaged fuel assembly). To evaluate loading of these assemblies into the canister, an analysis adding 1 and then 2 undamaged fuel rods into 1, 2, 3 and then 5 guide tubes is made. This approach considers a fuel assembly with up to 186 fuel rods. The results of the evaluation of these configurations are shown in Table 6.6.1-7. While higher in reactivity than the Maine Yankee hybrid base case, any fuel configuration with up to 2 fuel rods per guide tube is less reactive than the accident case for the Westinghouse 17 × 17 OFA fuel assemblies. Therefore, the Westinghouse 17 × 17 OFA fuel criticality evaluation is bounding.

Fuel rods may also be inserted in the guide tubes of fuel assemblies from which the fuel rods were removed (i.e., fuel rods removed from a fuel assembly and reinstalled in the guide tubes of the same fuel assembly). These fuel rods may be undamaged or damaged. The maximum number of fuel rods in these assemblies, including fuel rods in the guide tubes remains 176. These configurations are restricted to loading in one of the two configurations of the Maine Yankee Fuel Can in a corner fuel position in the basket. As shown in Section 6.6.1.2.4 for the removed fuel rods, and Section 6.6.1.3 for the damaged fuel, the maximum reactivity of Maine Yankee assemblies containing 176 fuel rods in various configurations is bounded by the Westinghouse 17 × 17 OFA evaluation. These nonstandard Maine Yankee assemblies are restricted to the corner fuel positions.

In addition to the fuel rods, some Maine Yankee assemblies may contain poison shim rods in guide tubes. These solid fill rods will serve as parasitic absorber and displace moderator and are, therefore, not included in the criticality model but are bounded by the evaluation performed.

6.6.1.2.6 Consolidated Fuel

The consolidated fuel is a 17 × 17 array of undamaged fuel rods with a pitch of 0.492 inches. Some of the locations in the array contain solid fill rods and some are empty. To determine the reactivity of the consolidated fuel lattice with empty fuel rod positions, an analysis changing the location and the number of empty positions is performed. This analysis considers 24 consolidated fuel lattices in the basket. All 24 consolidated fuel lattices are centered in the fuel tubes and have the same number and location of empty fuel rod positions.

As shown in Section 6.6.1.2.4, the removed fuel rod configuration with a 0.380-inch pellet diameter provides a more reactive system than a system using the optimum pellet diameter from Section 6.6.1.2.1. The larger pellet cases are more reactive, since moderator is added at the empty fuel rod positions to an assembly that contains more fuel. Therefore, the consolidated assembly empty rod position evaluation is performed with the 0.380-inch pellet diameter.

The results of this evaluation are shown in Table 6.6.1-8. Configurations having more than 73 empty positions result in a more reactive system than the Westinghouse 17 × 17 OFA model. The most reactive consolidated assembly case occurs with 113 empty rod positions in the geometry shown in Figure 6.6.1-2. However, when the loading of the consolidated fuel is restricted to the four corner fuel tubes, the reactivity of the system is lower than the accident condition of the basket loaded with Westinghouse 17 × 17 OFA assemblies. Therefore, loading of the consolidated fuel is restricted to the four corner fuel tube positions of the basket. With this loading restriction, the Westinghouse 17 × 17 OFA fuel criticality evaluation is bounding.

6.6.1.2.7 Conclusions

The criticality analyses for the Maine Yankee site specific fuel demonstrate that the UMS® basket loaded with these fuel assemblies results in a system that is less reactive than loading the basket with the Westinghouse 17 × 17 OFA fuel assemblies, provided that loading is restricted to the four corner fuel tube positions in the basket for:

- All 14 × 14 fuel assemblies with less than 176 fuel rods or solid filler rods
- All 14 × 14 fuel assemblies with hollow zirconium alloy tubes
- All 17 × 17 consolidated fuel lattices
- All 14 × 14 fuel assemblies with fuel rods in the guide tubes and a maximum of 176 fuel rods or solid rods and fuel rods.

The following Maine Yankee fuels are not restricted as to loading position within the basket:

- All 14 × 14 fuel assemblies with 176 fuel rods or solid filler rods at a maximum enrichment of 4.2 wt % ^{235}U.
- Variably enriched fuel with a maximum fuel rod enrichment of 4.21 wt % ^{235}U with a maximum planar average enrichment of 3.99 wt % ^{235}U.
- Fuel with solid stainless steel filler rods, solid zirconium alloy filler rods or solid poison shim rods in any location.
- Fuel with annular axial end blankets of up to 4.2 wt % ^{235}U.
- Fuel with a maximum of 2 undamaged fuel rods in each guide tube for a total of 186 fuel rods.

Assemblies defined as unrestricted may be loaded into the basket in any basket location and may be mixed in the same basket. While not analyzed in detail, CEAs and ICI thimble assemblies may be loaded into any undamaged assemblies. These components displace a significant amount of water in the fuel lattice while adding parasitic absorber, thereby reducing system reactivity.

Since the storage cask and the transfer cask loaded with the Westinghouse 17 × 17 OFA fuel assemblies is criticality safe, it is inherent that the same cask loaded with the less reactive fuel assemblies employed at Maine Yankee, using the fuel assembly loading restrictions presented above, is also criticality safe.

6.6.1.3 Maine Yankee Damaged Spent Fuel and Fuel Debris

Damaged fuel assemblies are placed in one of the two configurations of the Maine Yankee Fuel Can prior to loading in the basket (see Drawings 412-501 and 412-502). The Maine Yankee Fuel Can has screened openings in the baseplate and the lid to permit drainage, vacuum drying, and inerting of the can. This evaluation conservatively considers 100% of the fuel rods in the fuel can as damaged.

Fuel debris can be loaded in a rod or tube structure that is subsequently loaded into a Maine Yankee fuel can. The mass of fuel debris placed in the rod or tube is restricted to the mass equivalent of a fuel rod of an undamaged fuel assembly.

The Maine Yankee spent fuel inventory includes fuel assemblies with fuel rods inserted in the guide tubes of the assembly. If the integrity of the cladding of the fuel rods in the guide tubes cannot be ascertained, then those fuel rods are assumed to be damaged.

6.6.1.3.1 Damaged Fuel Rods

All of the spent fuel classified as damaged, and all of the spent fuel not in its original lattice, are stored in a Maine Yankee fuel can. This fuel is analyzed using a 100% fuel rod failure assumption. The screened fuel can is designed to preclude the release of pellets and gross particulate to the canister cavity. Evaluation of the canister with four (4) Maine Yankee fuel cans containing CE 14 × 14 fuel assemblies that have up to 176 damaged fuel rods, or consolidated fuel consisting of up to 289 fuel rods, considers 100% dispersal of the fuel from these rods within the fuel can. The Maine Yankee fuel can is restricted to loading in the four corner positions of the basket.

All loose fuel in each analysis is modeled as a homogeneous mixture of fuel and water of which the volume fractions of the fuel versus the water are varied from 0 - 100. By varying the fuel fraction up to 100%, this evaluation addresses fuel masses significantly larger than those available in a standard or consolidated fuel assembly. First, loose fuel from damaged fuel rods within a fuel assembly is evaluated between the remaining rods of the most reactive missing rod array. The results of this analysis, provided in Table 6.6.1-9, show a slight decrease in the reactivity of the system. This results from adding fuel to the already optimized H/U ratio of the bounding missing rod array. This effectively returns the system to an undermoderated state. Second, loose fuel is considered above and below the active fuel region of this most reactive missing rod array. This analysis is performed within a finite cask model. The results of this study, provided in Table 6.6.1-10, show that any possible mixture combination of fuel and water above and below the active fuel region, and hence, above and below the neutron absorber sheet coverage, will not significantly increase the reactivity of the system beyond that of the missing rod array. Loose fuel is also considered to replace all contents of the Maine Yankee fuel can in each four corner fuel tube location. The results of this study, provided in Table 6.6.1-11, show that any mixture of fuel and water within this cavity will not significantly increase the reactivity of the system beyond that of the missing rod array.

Damaged fuel within the fuel can may also result from a loss of integrity of a consolidated fuel assembly. As described in Section 6.6.1.2.6, the consolidated assembly missing rod study shows that a potentially higher reactivity heterogeneous configuration does not increase the overall reactivity of the system beyond that of loading 24 Westinghouse 17 × 17 OFA assemblies when this configuration is restricted to the four corner locations. The homogeneous mixture study of loose fuel and water replacing the contents of the Maine Yankee fuel can (in each of the four corner fuel tube locations) considers more fuel than is present in the 289 fuel rod consolidated

6.6.1.4.3 Maine Yankee Miscellaneous Component Loading Restrictions

Based on the evaluation of Maine Yankee fuel assemblies with start-up sources, CEA fingertips, or an ICI segment inserted in guide tubes, the following loading restrictions apply:

1) Any Maine Yankee fuel assembly having a component evaluated in this section inserted in a corner or center guide tube must be loaded in one of the four corner fuel loading positions of the UMS® basket. Basket corner positions are also peripheral positions and are marked "P/C" in Figure 2.1.3.1-1.
2) Start-up sources shall be restricted to loading in the center guide tubes of fuel assemblies classified as undamaged and must be loaded in a Class 1 canister.
3) Only one start-up source may be loaded into any undamaged fuel assembly.
4) The CEA fingertips and ICI segment must be loaded in a guide tube location that is closed at the bottom end (corner guide tubes) of an undamaged fuel assembly. The guide tube must be closed at the top end using a CEA flow plug.
5) Fuel assemblies having a CEA flow plug installed must be loaded in a Class 2 canister.
6) Up to four undamaged fuel assemblies with inserted start-up sources may be loaded in any canister (using the four corner positions of the basket).

When loaded in accordance with these restrictions, the evaluated components do not significantly impact the reactivity of the system.

6.6.1.5 Maine Yankee Fuel Comparison to Criticality Benchmarks

The most reactive system configuration parameters for Maine Yankee fuel have been compared to the range of applicability of the critical benchmarks evaluated using the KENO-Va code of the SCALE 4.3 CSAS sequence. As shown in the following table, all of the Maine Yankee fuel parameters fall within the benchmark range.

Parameter	Benchmark Minimum Value	Benchmark Maximum Value	Maine Yankee Fuel Most Reactive Configuration
Enrichment (wt. % ^{235}U)	2.35	4.74	4.2
Rod pitch (cm)	1.26	2.54	1.50
H/U volume ratio	1.6	11.5	2.6
^{10}B areal density (g/cm^2)	0.00	0.45	0.025
Average energy group causing fission	21.7	24.2	22.5
Flux gap thickness (cm)	0.64	5.16	2.22 to 3.81
Fuel diameter (cm)	0.790	1.265	0.896
Clad diameter (cm)	0.940	1.415	1.111

The H/U volume ratio for the assembly is shown. The lattice H/U volume ratio is 2.2 for the clad gap flooded scenario.

The results of the NAC-UMS® Storage System benchmark calculations are provided in Section 6.5.1.

Chapter 7

7.0 CONFINEMENT

The Universal Storage System Transportable Storage Canister provides confinement for its radioactive contents in long-term storage. The confinement boundary is closed by welding, creating a solid barrier to the release of contents in all of the design basis normal, off-normal and accident conditions. The welds are visually inspected and nondestructively examined to verify integrity.

The sealed canister contains an inert gas (helium). The confinement boundary retains the helium and also prevents the entry of outside air into the canister in long term storage. The exclusion of air precludes degradation of the fuel rod cladding, over time, due to cladding oxidation failures.

The Universal Storage System canister confinement system is designed, fabricated and tested to assure there will be no credible leakage from the confinement boundary and, therefore, the NAC-UMS® meets the requirements of 10 CFR 72.24 for protection of the public from release of radioactive material [2]. It also meets the requirements of 10 CFR 72.122 for protection of the spent fuel contents in long-term storage such that future handling of the contents would not pose an operational safety concern.

7.1 Confinement Boundary

The transportable storage canister provides confinement of the PWR or BWR contents in long-term storage. The welded canister forms the confinement vessel.

The primary confinement boundary of the canister consists of the canister shell, bottom plate, shield lid, the two port covers, and the welds that join these components. A secondary confinement boundary consists of the canister shell, the structural lid, and the welds that join the structural lid and canister shell. The confinement boundaries are shown in Figures 7.1-1 and 7.1-2. There are no bolted closures or mechanical seals in the primary or secondary confinement boundary. The confinement boundary welds are described in Table 7.1-1.

7.1.1 Confinement Vessel

The canister consists of three principal components: the canister shell, the shield lid, and the structural lid. The canister shell is a right circular cylinder constructed of 0.625-inch thick rolled Type 304L stainless steel plate. The edges of the rolled plate are joined using full penetration welds. It is closed at the bottom end by a 1.75-inch thick circular plate joined to the shell by a

full penetration weld. The inside and outside diameters of the canister are 65.81 inches and 67.06 inches, respectively. The canister has a length that is variable, depending on the canister class.

The canister is fabricated in accordance with the ASME Boiler and Pressure Vessel Code, Section III, Subsection NB [3], except for approved Code exceptions as listed in Table B3-1 of Appendix B of the CoC.

After loading, the canister is closed at the top by a shield lid and a structural lid. The shield lid is a 7-inch-thick Type 304 stainless steel plate. It is joined to the canister shell using a field installed bevel weld. The shield lid contains the drain and vent penetrations and provides gamma radiation shielding for the operators during the welding, draining, drying and inerting operations. After the shield lid is welded in place, the canister is pressure tested. Following draining, drying and inerting operations, the vent and drain penetrations are closed with Type 304 stainless steel port covers that are welded in place with bevel welds. The shield lid is then helium leakage tested to ensure no credible leakage from the confinement boundary using the evacuated envelope test method in accordance with ANSI N14.5 and ASME Code, Section V. The operating procedures, describing the handling steps to close the canister, are presented in Section 8.1.1. The pressure and leak test procedures are described in Section 9.1.

A secondary, or redundant, confinement boundary is formed at the top of the canister by the structural lid, which is placed over the shield lid. The structural lid is a 3-inch thick Type 304L stainless steel plate. The structural lid provides the attachment points for lifting the loaded canister. The structural lid is welded to the shell using a field installed bevel weld.

The weld specifications and the weld examination and acceptance criteria for the shield lid and stuctural lid welds are presented in Section 7.1.3.2 and Section 9.1.

The confinement boundaries are shown in Figures 7.1-1 and 7.1-2. As illustrated in Figure 7.1-2, the secondary confinement boundary includes the structural lid, the upper 3.2 inches of the canister shell and the joining weld. This boundary provides additional assurance of no credible leakage from the canister during its service life.

7.1.1.1 Design Documents, Codes and Standards

The canister is constructed in accordance with the license drawings presented in Section 1.8. The principal Codes and Standards that apply to the canister design, fabrication and assembly are described in Sections 7.1.1 and 7.1.3, and are shown on the licensing drawings.

7.1.1.2 Technical Requirements for the Canister

The canister confines up to 24 PWR, or 56 BWR, fuel assemblies. Over its 50-year design life, the canister precludes the release of radioactive contents and the entry of air that could potentially damage the cladding of the stored spent fuel. The design, fabrication and testing of the canister to the requirements of the ASME Code Section III, Subsection NB, with approved exceptions as listed in Table B3-1 of Appendix B of the CoC, ensures that the canister maintains confinement in all of the evaluated normal, off-normal, and accident conditions.

The canister has no exposed penetrations, no mechanical closures, and does not employ seals to maintain confinement. There is no requirement for continuous monitoring of the welded closures. The design of the canister allows the recovery of stored spent fuel should it become necessary.

The minimum helium purity level of 99.9% specified in Section 8.1.1 of the Operating Procedures maintains the quantity of oxidizing contaminants to less than one mole per canister for all loading conditions. Based on the calculations presented in Section 4.4.5, the free gas volume of the empty canister yields an inventory of less than 300 moles. Conservatively assuming that all of the impurities in 99.9% pure helium are oxidents, a maximum of 0.3 moles of oxidants could exist in the largest NAC-UMS® canister during storage. By limiting the amount of oxidants to less than one mole, the recommended limits for preventing cladding degradation found in the Pacific Northwest Laboratory, "Evaluation of Cover Gas Impurities and Their Effects on the Dry Storage of LWR Spent Fuel," PNL-6365 [6] are satisfied.

The design criteria that apply to the canister, as an element of the NAC-UMS® dry storage system, are presented in Table 1.2-1. The design basis parameters of the PWR and BWR spent fuel contents are presented in Section 1.3.

7.1.1.3 Release Rate

The primary confinement boundary is formed by joining the canister confinement boundary stainless steel components by welding. The canister shell longitudinal and girth welds are visually inspected, ultrasonically examined and pressure tested as described in Section 9.1 to confirm integrity. The shield lid welds are liquid penetrant examined following the root and the final weld passes. The shield lid to canister shell weld is pressure tested as described in Section 9.1.2. The structural lid to canister shell multi-pass weld is either: 1) progressively liquid penetrant examined; or 2) ultrasonically examined in conjunction with a liquid penetrant examination of the final weld surface.

To demonstrate confinement integrity of the shield lid to canister shell weld, the leak rate criteria of 1×10^{-7} ref cm^3/sec, or 2×10^{-7} cm^3/sec (helium) at standard conditions, as defined in Section 2.1 of ANSI N14.5-1997, is applied. "Standard" conditions are defined as the leak rate at 298K (25°C) with a one atmosphere pressure differential in the test condition. Since helium at approximately 25°C (77°F) is injected into the canister, at the point of the procedure (Section 8.1.1, Step 34) that the leak test is performed, the actual temperature of the helium is always equal to, or higher than, 25°C due to the decay heat of the contents. This results in a pressure within the canister that is higher than the 0 psig (helium) that is initially established. To ensure that the leak test is conservatively performed, a leak rate of 2×10^{-7} cm^3/sec is used. The higher temperature and higher pressure differential that actually exist in the canister, are conservatively ignored. The sensitivity of the leak test is 1×10^{-7} cm^3/sec (helium). Using this criterion, there is no credible leakage from the canister, and the calculation of the radionuclide inventory and canister leakage are not required. The leak test is described in Section 8.1.1 (Step 49) and in Section 9.1.3.

These steps provide reasonable assurance that the canister confinement boundary does not allow any credible leakage and does not provide a path for the release of any of the content particulates, fission gases, volatiles, corrosion products or fill gases.

7.1.2 Confinement Penetrations

Two penetrations (with quick-disconnect fittings) are provided in the canister shield lid for operator use. One penetration is used for draining residual water from the canister. It connects to a drain tube that extends to the bottom of the canister. The other penetration extends only to the underside of the shield lid. It is used to introduce air, or inert gas, into the top of the canister.

Once draining is completed, either penetration may be used for vacuum drying and backfilling with helium. After backfilling, both penetrations are closed with port covers that are welded to the shield lid. When the port covers are in place, the penetrations are not accessible. These port covers are enclosed and covered by the structural lid, which is also welded in place to form the secondary confinement boundary. The structural lid and the remainder of the canister have no penetrations.

7.1.3 Seals and Welds

This section describes the process used to properly assemble the confinement vessel (canister). Weld processes and inspection and acceptance criteria are described in Section 7.1.3.2 and Section 9.1.

No elastomer or metallic seals are used in the confinement boundary of the canister.

7.1.3.1 Fabrication

All cutting, machining, welding, and forming are performed in accordance with Section III, Article NB-4000 of the ASME Code, unless otherwise specified in the approved fabrication drawings and specifications. License drawings are provided in Section 1.8. Code exceptions are listed in Table B3-1 of Appendix B.

7.1.3.2 Welding Specifications

The canister body is assembled using longitudinal and, if required, circumferential shell welds and a circumferential weld to join the bottom plate to the shell.

Weld procedures and qualifications are in accordance with ASME Code Section IX [4]. The welds joining the canister shell are radiographed in accordance with ASME Code Section V, Article 2. The weld joining the bottom plate to the canister shell is ultrasonically examined in accordance with ASME Code Section V, Article 5 [5]. The acceptance criteria for these welds is as specified in ASME Code Section III, NB-5320 (radiographic) and NB-5330 (ultrasonic). The finished surfaces of these welds are liquid penetrant examined in accordance with ASME Code, Section III, NB-5350.

After loading, the canister is closed by the shield lid and the structural lid using field installed groove welds.

After the shield lid is welded in place, the canister is pneumatically (air/nitrogen/helium over water) pressure tested. Following draining, drying and inerting operations, the vent and drain ports are closed with port covers that are welded in place. The root and final surfaces of the shield lid to port cover welds are liquid penetrant examined in accordance with ASME Code Section V, Article 6 for welds requiring multiple passes. For port cover welds completed in a single pass, the final surface is liquid penetrant examined in accordance with the Section V, Article 6 criteria. Acceptance is in accordance with ASME Code Section III, NB-5350. The shield lid-to-canister shell weld is liquid penetrant examined at the root and final surfaces in accordance with ASME Code Section V, Article 6, with acceptance in accordance with ASME Code Section III, NB-5350, and is pressure and leak tested. The operating procedures describing the handling steps to seal the canister are presented in Section 8.1.1. The pressure and leak test procedures are described in Sections 8.1.1 and 9.1.3.

A redundant confinement boundary is provided at the top of the canister by the structural lid, which is placed over the shield lid. The structural lid is welded to the canister shell using a field-installed groove weld. The structural lid to canister shell weld is either: 1) ultrasonically examined (UT) in accordance with ASME Code Section V, Article 5, with the final weld surface liquid penetrant (PT) examined in accordance with ASME Code Section V, Article 6; or, 2) progressive liquid penetrant examined in accordance with ASME Code Section V, Article 6. Acceptance criteria are specified in ASME Code Section III, NB-5330 (UT) and NB-5350 (PT).

All welding procedures are written and qualified in accordance with Section IX of the ASME Code. Each welder and welding operator must be qualified in accordance with Section IX of the ASME Code.

7.1.3.3 Testing, Inspection, and Examination

The detailed inspection, nondestructive examination and test programs for the confinement vessel and components are described in Chapter 9.

7.1.4 Closure

The primary closure of the transportable storage canister consists of the welded shield lid and the two welded port covers. There are no bolted closures or mechanical seals in the primary closure. A secondary closure is provided at the top end of the canister by the structural lid. The structural lid, when welded to the canister shell, fully encloses the shield lid and the port covers.

7.3 Confinement Requirements for Hypothetical Accident Conditions

The evaluation of the canister for off-normal and accident condition loading is provided in Sections 11.1 and 11.2, respectively.

Once the canister is placed inside the vertical concrete cask, it is effectively protected from direct loading due to natural phenomena, such as seismic events, flooding and tornado (wind driven) missiles. Accident conditions assume the cladding failure of all the fuel rods stored in the canister. Consequently, there is an increase in canister internal pressure due to the release of a fraction of the fission product and charge gases. The accident conditions internal pressure for the PWR and BWR configurations is calculated in Section 11.2.1.

For evaluation purposes, a class of events identified as off-normal is also considered in Section 11.1. The off-normal class of events is not considered here, since off-normal conditions are bounded by the hypothetical accident conditions.

The structural analysis of the canister for off-normal and accident conditions of storage, presented in Chapter 11, show that the canister is not breached in any of the evaluated events. Consequently, there is no credible leakage of radioactive material from the confinement boundary during off-normal or accident conditions of storage.

The resulting site boundary dose due to a hypothetical accident is, therefore, less than the 5 rem whole body or organ (including skin) dose at 100 meter minimum boundary required by 10 CFR 72.106 (b) for accident exposures.

THIS PAGE INTENTIONALLY LEFT BLANK

7.4 Confinement Evaluation for Site Specific Spent Fuel

This section presents the confinement evaluation for fuel assembly types or configurations, which are unique to specific reactor sites. Site specific spent fuel configurations result from conditions that occurred during reactor operations, participation in research and development programs, and from testing programs intended to improve reactor operations. Site specific fuel includes fuel assemblies that are uniquely designed to accommodate reactor physics, such as axial fuel blanket and variable enrichment assemblies, and fuel rod or assemblies that are classified as damaged.

The Transportable Storage Canister is designed, fabricated and tested to assure there will be no credible leakage from the confinement boundary, as described in Section 7.1. Consequently, site specific fuel configurations need be evaluated only if the configuration results in a modification of the confinement boundary of the canister that is intended for use or when the configuration could result in a higher internal pressure or temperature than is used in the design basis analysis.

7.4.1 Confinement Evaluation for Maine Yankee Site Specific Spent Fuel

Maine Yankee site specific spent fuel is to be stored in either the Class 1 or Class 2 Transportable Storage Canister, depending on the overall length of the fuel assembly, including inserted nonfuel-bearing components. These canisters are closed by welding and are inspected and tested to assure no credible leakge from the confinement boundary.

Site specific fuel includes fuel having variable enrichment radial zoning patterns and annular axial fuel blankets, removed fuel rods or empty rod positions, fuel rods placed in guide tubes, consolidated fuel, damaged fuel, and high burnup fuel (fuel with a burnup between 45,000 MWd/MTU and 50,000 MWd/MTU). These configurations are not included in the standard fuel analysis, but are present in the site fuel inventory that must be stored. As discussed in Section 4.5.1, the site specific fuel configurations do not result in a canister pressure or temperature that exceeds the canister design basis. Therefore, there is no credible leakage from a canister containing Maine Yankee high burnup fuel rods site-specific spent fuel.

Undamaged site specific fuel is loaded directly into the fuel tubes in the PWR basket. Damaged fuel is inserted into one of the two configurations of the Maine Yankee Fuel Can, shown in Drawings 412-501 and 412-502, which precludes the release of gross particulate material from the fuel can. The fuel can is sized to allow its insertion into a fuel position in the PWR basket.

THIS PAGE INTENTIONALLY LEFT BLANK

7.5 References

1. ANSI N14.5-1997, "American National Standard for Radoactive Materials – Leakage Tests on Packages for Shipment," American National Standards Institute, 1997.

2. Title 10 of the Code of Federal Regulations, Part 72 (10 CFR 72), "Licensing Requirements for the Storage of Spent Fuel in an Independent Spent Fuel Storage Installation," April 1996 Edition.

3. ASME Boiler and Pressure Vessel Code, Section III, Division I, "Rules for Construction of Nuclear Power Plant Components," 1995 Edition with 1995 Addenda.

4. ASME Boiler and Pressure Vessel Code, Section IX, "Qualification Standard for Welding and Brazing Procedures, Welders, Brazers, and Welding and Brazing Operators," 1995 Edition with 1995 Addenda.

5. ASME Boiler and Pressure Vessel Code, Section V, "Nondestructive Examination," 1995 Edition with 1995 Addenda.

6. PNL-6365, "Evaluation of Cover Gas Impurities and Their Effects on the Dry Storage of LWR Spent Fuel," Pacific Northwest Laboratory, Richland, Washington, November, 1987.

THIS PAGE INTENTIONALLY LEFT BLANK

Chapter 8

Heat Load (kW)	Canister Water Temperature (°F)	Time to Start Temperature Measurement (hrs)
$20 < L \leq 23$	180	18
$17.6 < L \leq 20$	180	21
$14 < L \leq 17.6$	180	25
$11 < L \leq 14$	170	28
$8 < L \leq 11$	160	33
$L \leq 8$	150	38

Note: As an alternative, some sites may choose to perform welding operations for closure of the canister in a cask loading pit with water around the canister (below the trunnions) and in the annulus. This alternative provides additional shielding during the closure operation. If this alternative is implemented, the start time for compliance with Table 8.1.1-3 limits, as defined in Step 12, begins when the top of the canister is above the pool water surface (i.e., no longer fully submerged).

13. As the cask is raised, spray the transfer cask outer surface with clean water to wash off any gross contamination.
14. When the transfer cask is clear of the pool surface, but still over the pool, turn off the clean water flow to the annulus, remove hoses and allow the annulus water to drain to the pool. Move the transfer cask to the decontamination area or other suitable work station.
    Note: Access to the top of the transfer cask is required. A suitable work platform may need to be erected.
15. Verify that the shield lid is level and centered.
16. Attach the suction pump to the suction pump fitting on the vent port. Operate the suction pump to remove free water from the shield lid surface. Disconnect the suction pump and suction pump fitting. Remove any free standing water from the shield lid surface and from the vent and drain ports.
17. Decontaminate the top of the transfer cask and shield lid as required to allow welding and inspection activities.
    Note: Supplemental shielding may be used for activities around the shield lid.
18. Insert the drain tube assembly with a female quick-disconnect attached through the drain port of the shield lid into the basket drain tube sleeve. Remove the female quick-disconnect. Torque the drain tube assembly by hand until metal-to-metal contact is achieved; then torque to 135 ± 15 ft-lbs for Furon metal seals or 115 ± 5 ft-lbs for elastomer seals (EPDM or Viton). Install a quick-disconnect in the vent port.

19. Connect the suction pump to the drain port. Verify that the vent port is open. Remove approximately 70 gallons of water from the canister. Disconnect and remove the pump.
    Caution: Radiation level may increase as water is removed from the canister.
20. Install the automatic welding equipment, including the supplemental shield plate.
21. Attach the hydrogen gas detector to the vent port. Verify that the concentration of any detectable hydrogen gas in the free volume beneath the shield lid is less than 2.4%. Continue monitoring for hydrogen gas during completion of the shield lid root pass weld.
    Note: If, at any time, the hydrogen gas concentration exceeds 2.4%, stop welding operations and connect and operate the vacuum system, or use a gas purge through the vent port to remove the gases from beneath the shield lid. Reverify that the hydrogen gas concentration beneath the shield lid is less than 2.4%. Disconnect and remove the vacuum or purging system.
22. Operate the welding equipment to complete the root weld joining the shield lid to the canister shell following approved procedures. Remove the hydrogen detector from the vent tube. Leave the connector and vent tube installed to vent the canister.
23. Examine the root weld using liquid penetrant and record the results.
24. Complete welding of the shield lid to the canister shell.
25. Liquid penetrant examine the final weld surface and record the results.
26. Attach a regulated air, nitrogen or helium supply line to the vent port. Install a fitting on the drain port. Pressurize the canister to 35 psia and hold the pressure. There must be no loss of pressure for a minimum of 10 minutes.
27. Release the pressure.
    Note: As an option, an informational helium leak test may be conducted at this point using the following steps (the record leak test is performed at Step 47).
    27a. Evacuate and backfill the canister with helium having a minimum purity of 99.9% to a pressure of 18.0 psia.
    27b. Using a helium leak detector ("sniffer" detector) with a test sensitivity of 5×10^{-5} cm^3/sec (helium), survey the weld joining the shield lid and canister shell.
    27c. At the completion of the survey, vent the canister helium pressure to one atmosphere (0 psig).
28. Drain the canister.
    Drain the remaining water from the canister cavity (typically, the process ranges from 1 to 2 hours). Draining of the canister may be performed by suction, by a blow-down gas pressure of 15-18 psig, or by a combination of suction and a blow-down gas pressure of 15-18 psig. After removal of the water from the canister, disconnect the equipment from the canister. Note the time that the last free water is removed from the canister cavity. If not already installed, install a quick-disconnect to the open vent port.
    Caution: Radiation levels at the top and sides of the transfer cask will rise as water is removed.

Note: If the canister draining operation is interrupted or only partially completed, the canister shall be refilled with water prior to start of the auxiliary cooling operations (i.e., forced air or in-pool cooling), per the Note following Step 12.

Note: The total time duration from the completion of draining the water from the canister (Step 28), or from completion of either in-pool or forced air cooling, through completion of dryness verification testing per LCO 3.1.2 (Step 31) and the completion of the helium backfill process per LCO 3.1.3 (Step 32) shall be controlled and monitored in accordance with the surveillance requirements and actions of LCO 3.1.1.

29. Attach the vacuum equipment to the vent and drain ports. Dry any free standing water in the vent and drain port recesses.
30. Operate the vacuum equipment until a vacuum of ≤10 mm of mercury exists in the canister and isolate the vacuum pump and turn the pump off.
31. Verify that no water remains in the canister by holding the vacuum of ≤10 mm of mercury for a minimum of 10 minutes. If water is present in the cavity, the pressure will rise as the water vaporizes. Continue the vacuum/hold cycle until the conditions of LCO 3.1.2 are met.
    Precaution: If the spent fuel pool water temperature for canisters vacuum dried in the pool, or the cask preparation area ambient temperature for canisters vacuum dried outside the pool is below 65°F, the vacuum drying of the canister shall be extended below the standard pressure value of ≤ 10 mm Hg until a cavity pressure of ≤ 5 mm Hg is achieved. The dryness verification shall be performed and meet the acceptance criteria as specified in LCO 3.1.2, but limiting any pressure rise during the 10-minute hold period to ≤ 5 mm Hg.
32. Evacuate the cavity until a vacuum of ≤3 mm of mercury exists and backfill the canister cavity with helium having a minimum purity of 99.9% to a pressure of one atmosphere (0 psig).
    Note: Canister helium backfill pressure must conform to the requirements of LCO 3.1.3.
    Note: Monitor the time from this step (completion of helium backfill) until completion of canister transfer into and closure of the concrete cask in accordance with LCO 3.1.4.
33. Disconnect the vacuum and helium supply lines from the vent and drain ports. Dry any residual water that may be present in the vent and drain port cavities.
34. Install the vent and drain port covers.
35. Complete the root pass weld of the drain port cover to the shield lid.
    Note: If the drain port cover weld is completed in a single pass, the weld final surface is liquid penetrant inspected in accordance with Step 38.
36. Prepare the weld and perform a liquid penetrant examination of the root pass. Record the results.

37. Complete welding of the drain port cover to the shield lid.
38. Prepare the weld and perform a liquid penetrant examination of the drain port cover weld final pass. Record the results.
39. Complete the root pass weld of the vent port cover to the shield lid.

    Note: If the vent port cover weld is completed in a single pass, the weld final surface is liquid penetrant inspected in accordance with Step 42.
40. Prepare the weld and perform a liquid penetrant examination of the root pass. Record the results.
41. Complete welding of the vent port cover to the shield lid.
42. Prepare the weld and perform a liquid penetrant examination of the weld final surface. Record the results.
43. Remove the welding machine and any supplemental shielding used during shield lid closure activities.
44. Install the helium leak test fixture.
45. Attach a vacuum line and leak detector to the leak test fixture fitting.
46. Operate the vacuum system to establish a vacuum in the leak test fixture.
47. Operate the helium leak detector to verify that there is no indication of a helium leak exceeding 2×10^{-7} cm^3/second, at a minimum test sensitivity of $\leq 1 \times 10^{-7}$ cm^3/second (helium), in accordance with the requirements of LCO 3.1.5.
48. Release the vacuum and disconnect the vacuum and leak detector lines from the fixture.
49. Remove the leak test fixture.
50. Attach a three-legged sling to the structural lid using the swivel hoist rings.

    Caution: Ensure that the hoist rings are fully seated against the structural lid. Torque the hoist rings in accordance with Table 8.1.1-2. Verify that the spacer ring is in place on the structural lid.

    Note: Verify that the structural lid is stamped or otherwise marked to provide traceability of the canister contents.
51. Using the cask handling crane or the auxiliary hook, install the structural lid in the top of the canister. Verify that the structural lid is flush with, or protrudes slightly above, the canister shell. Verify that the gap in the spacer ring is not aligned with the shield lid alignment key. Remove the hoist rings.
52. Install the automatic welding equipment on the structural lid including the supplemental shield plate.
53. Operate the welding equipment to complete the root weld joining the structural lid to the canister shell.
54. Prepare the weld and perform a liquid penetrant examination of the weld root pass. Record the results.

55. Continue with the welding procedure, examining the weld at 3/8-inch intervals using liquid penetrant. Record the results of each intermediate and the final examination.

    Note: If ultrasonic testing of the weld is used, testing is performed after the weld is completed.

56. Remove the weld equipment and supplemental shielding.
57. Install the transfer cask retaining ring. Torque bolts to 155 ± 10 ft-lbs. (Table 8.1.1-2).
58. Decontaminate the external surface of the transfer cask to the limits established for the site.

Figure 8.1.1-1 Typical Vent and Drain Port Locations

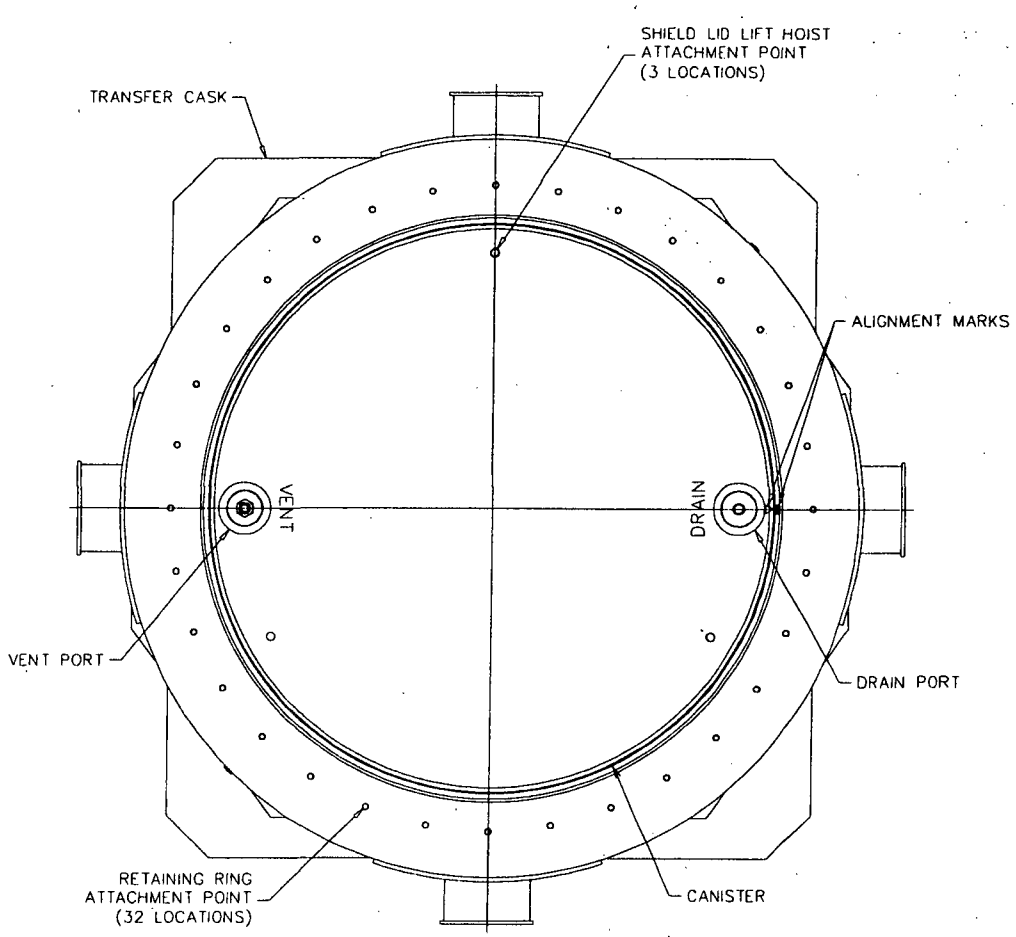

Chapter 9

Advanced Transfer Cask

The Advanced transfer cask lifting trunnion load test shall consist of applying a vertical load of 690,000 pounds, which is greater than 300% of the maximum service load (225,000 pounds) for the transfer cask and loaded canister with the shield lid and full of water. The bottom shield door and rail load test shall consist of applying a vertical load of 300,000 pounds, which is over 300% of the maximum service load (98,000 lbs). These maximum service loads are based on the heaviest configuration and, thus, bound all the other configurations.

The load tests shall be held for a minimum of 10 minutes and shall be performed in accordance with approved, written procedures.

Following completion of the lifting trunnion load tests, all trunnion welds and all load bearing surfaces shall be visually inspected for permanent deformation, galling or cracking. Liquid penetrant examination (the magnetic particle method may be used on ferrous material) shall be performed on accessible trunnion and shield door rail load-bearing welds in accordance with ASME Code Section V, Articles 1, 6 and/or 7, with acceptance in accordance with ASME Code Section III, NF-5340 or NF-5350, as applicable. Similarly, following completion of the bottom shield door and rail load tests, all door rail welds and all load bearing surfaces shall be visually inspected for permanent deformation, galling or cracking.

Any evidence of permanent deformation, cracking or galling of the load bearing surfaces or unacceptable liquid penetrant examination results, shall be cause for evaluation, rejection, or rework of the affected component. Liquid penetrant or magnetic particle examinations of all load bearing welds shall be performed in accordance with ASME Code Section V, Articles 1, 6 and/or 7, with acceptance in accordance with ASME Code Section III, NF-5350 or NF-5340, as applicable.

9.1.2.2 Concrete Cask

The concrete cask, at the option of the user/licensee, may be provided with lifting lugs to allow for the vertical handling and movement of the concrete cask. The lifting lugs are provided as two sets of two lugs each. The concrete cask lifting lugs shall be load tested by applying a vertical load, which is greater than 150 percent of the maximum concrete cask weight plus a 10 percent dynamic load factor, where the concrete cask weight is determined, based on the class, from Table 3.2-1 or 3.2-2.

The test load shall be applied for a minimum of 10 minutes in accordance with approved, written procedures. Following completion of the load test, all load bearing surfaces of the lifting lugs shall be visually inspected for permanent deformation, galling, or cracking. Liquid penetrant or magnetic particle examinations of load bearing surfaces shall be performed in accordance with ASME Code, Section V, Articles 1, 6 and/or 7, with acceptance criteria in accordance with ASME Code, Section III, Subsection NF, NF-5350 or NF-5340, as applicable.

Any evidence of permanent deformation, cracking, or galling, or unacceptable liquid penetrant or magnetic particle examination results for the load bearing surfaces of the lifting anchors shall be cause for evaluation, rejection, or rework and retesting.

9.1.2.3 Transportable Storage Canister

The transportable storage canister shell may be hydrostatically or pneumatically pressure tested during fabrication in accordance with Section NB-6200 or NB-6300 of the ASME Code, respectively. Hydrostatic testing will be performed in accordance with NB-6221 using 1.25 times the design pressure of 15 psig. The test pressure shall be held a minimum of 10 minutes in accordance with NB-6223. Examination after the pressure test shall be in accordance with NB-6224. Alternately, a pneumatic pressure test may be performed in accordance with NB-6321 using 1.2 times the design pressure of 15 psig. The test pressure shall be held a minimum of 10 minutes in accordance with NB-6323. Examination after the pressure test shall be in accordance with NB-6224.

The canister shell shall consist of the completed Shell Weldment as shown on Drawing 790-582.

If the pressure test is not performed during fabrication, a pressure test must be performed upon closure of the canister with the shield lid as described in Section 8.1.1 of the operating procedures.

9.1.3 Leak Tests

The canister is leak tested at the time of use. After the pressure test described in Section 9.1.2, the canister is drained of residual water, vacuum dried and backfilled with helium. The canister is pressurized with helium to 0 psig. The shield lid to canister shell weld and the weld joining the port covers to the shield lid are helium leak tested using a leak test fixture installed above the

shield lid. The leaktight criteria of 2.0×10^{-7} cm^3/sec (helium) of ANSI N14.5[9] is applied. The leak test is performed at a sensitivity of 1.0×10^{-7} cm^3/sec (helium). Any indication of a leak of 2.0×10^{-7} cm^3/sec (helium) or greater is unacceptable and repair is required as appropriate.

9.1.4 Component Tests

The components of the Universal Storage System do not require any special tests in addition to the material receipt, dimensional, and form and fit tests described in this chapter.

9.1.4.1 Valves, Rupture Disks and Fluid Transport Devices

The transportable storage canister and the vertical concrete cask do not contain rupture disks or fluid transport devices. There are no valves that are part of the confinement boundary for transport or storage. Quick-disconnect valves are installed in the vent and drain ports of the shield lid. These valves are convenience items for the operator, as they provide a means of quickly connecting ancillary drain and vent lines to the canister. During storage and transport, these fittings are not accessible, as they are covered by port covers that are welded in place when the canister is closed. As presented for storage and transport, the canister has no accessible valves or fittings.

9.1.4.2 Gaskets

The transportable storage canister and the vertical concrete cask have no mechanical seals or gaskets that form an integral part of the system, and there are no mechanical seals or gaskets in the confinement boundary.

9.1.5 Shielding Tests

Based on the conservative design of the Universal Storage System for shielding criteria and the detailed construction requirements, no shielding tests of the vertical concrete cask are required.

9.1.6 Neutron Absorber Tests

A neutron absorbing material is used for criticality control in the PWR, BWR and oversize BWR fuel tubes. The placement and dimensions of the neutron absorber are as shown on the License

Drawings for these components. The neutron absorbing material is an aluminum matrix material formed from aluminum and boron-carbide, available from a number of qualified vendors. The mixing of the aluminum and boron-carbide powder forming the neutron absorber material is controlled to assure the required ^{10}B areal density, as specified on the component License Drawings. The constituents of the neutron absorber material shall be verified by chemical testing and/or spectroscopy and by physical property measurement to ensure the quality of the finished plate or sheet. The results of all neutron absorber material tests and inspections, including the results of wet chemistry coupon testing, are documented and become part of the quality records documentation package for the fuel tube and basket assembly.

Aluminum/boron carbide neutron absorbing material is available under trade names such as BORAL® and METAMIC®.

BORAL is manufactured by AAR Advanced Structures (AAR) of Livonia, Michigan, under a Quality Assurance/Quality Control program in conformance with the requirements of 10 CFR 50, Appendix B. AAR uses a computer-aided manufacturing process that consists of several steps. The initial step is the mixing of the aluminum and boron carbide powders that form the core of the finished material. The amount of each powder is a function of the desired ^{10}B areal density. The methods used to control the weight and blend the powders are patented and proprietary processes of AAR.

METAMIC is similarly manufactured by California Consolidated Technology, Inc. (CCT). CCT uses patented and proprietary processes to control the weight and blend of the powders used to meet the ^{10}B content specification and also uses a computer-aided manufacturing process to form the neutron absorber plates.

After manufacturing, test samples from each batch of neutron absorber sheets shall be tested using wet chemistry techniques to verify the presence and minimum weight percent of ^{10}B. The tests shall be performed in accordance with approved written procedures.

9.1.6.1 Neutron Absorber Material Sampling Plan

The neutron absorber sampling plan is selected to demonstrate a 95/95 statistical confidence level in the neutron absorber sheet material in compliance with the specification. In addition to the specified sampling plan, each sheet of material is visually and dimensionally inspected using

9.3 References

1. ASME Boiler and Pressure Vessel Code, Section III, Division I, Subsection NB, "Class 1 Components," 1995 Edition with 1995 Addenda.

2. ASME Boiler and Pressure Vessel Code, Section V, "Nondestructive Examination," 1995 Edition with 1995 Addenda.

3. ASME Boiler and Pressure Vessel Code, Section VIII, Subsection B, Part UW, "Requirements for Pressure Vessels Fabricated by Welding," 1995 Edition with 1995 Addenda.

4. American Welding Society, Inc., "Structural Welding Code - Steel," AWS D1.1, 1996.

5. ASME Boiler and Pressure Vessel Code, Section IX, "Welding and Brazing Qualifications," 1995 Edition with 1995 Addenda.

6. ASME Boiler and Pressure Vessel Code, Section III, Division I, Subsection NG, "Core Support Structures," 1995 Edition with 1995 Addenda.

7. American Concrete Institute, "Building Code Requirements for Structural Concrete," ACI-318-95, October 1995.

8. American National Standards Institute, "Radioactive Materials - Special Lifting Devices for Shipping Containers Weighting 10,000 Pounds (4,500 kg) or More," ANSI N14.6-1993, 1993.

9. American National Standards Institute, "Leakage Tests on Packages for Shipment," ANSI N14.5-1997.

10. "Report on the Thermal Performance of the NAC-UMS® System at the Palo Verde Nuclear Generating Station (PVNGS) Independent Spent Fuel Storage Installation," NAC International, May 2003.

11. Recommended Practice No. SNT-TC-1A, "Personnel Qualification and Certification in Nondestructive Testing," The American Society for Nondestructive Testing, Inc., edition as invoked by the applicable ASME Code.

12. ASME Boiler and Pressure Vessel Code, Section III, Division 1, Code Case N-595-4, "Requirements for Spent Fuel Storage Canisters," May 2004.

Chapter 11

Table of Contents (Continued)

11.2.6.4 Corrective Actions 11.2.6-3
11.2.6.5 Radiological Impact 11.2.6-3
11.2.7 Maximum Anticipated Heat Load (133°F Ambient Temperature) 11.2.7-1
1.2.7.1 Cause of Maximum Anticipated Heat Load 11.2.7-1
11.2.7.2 Detection of Maximum Anticipated Heat Load 11.2.7-1
11.2.7.3 Analysis of Maximum Anticipated Heat Load 11.2.7-1
11.2.7.4 Corrective Actions 11.2.7-2
11.2.7.5 Radiological Impact 11.2.7-2
11.2.8 Earthquake Event 11.2.8-1
11.2.8.1 Cause of the Earthquake Event 11.2.8-1
11.2.8.2 Earthquake Event Analysis 11.2.8-1
11.2.8.3 Corrective Actions 11.2.8-11
11.2.8.4 Radiological Impact 11.2.8-11
11.2.9 Flood 11.2.9-1
11.2.9.1 Cause of Flood 11.2.9-1
11.2.9.2 Analysis of Flood 11.2.9-1
11.2.9.3 Corrective Actions 11.2.9-5
11.2.9.4 Radiological Impact 11.2.9-5
11.2.10 Lightning Strike 11.2.10-1
11.2.10.1 Cause of Lightning Strike 11.2.10-1
11.2.10.2 Detection of Lightning Strike 11.2.10-1
11.2.10.3 Analysis of the Lightning Strike Event 11.2.10-1
11.2.10.4 Corrective Actions 11.2.10-4
11.2.10.5 Radiological Impact 11.2.10-4
11.2.11 Tornado and Tornado Driven Missiles 11.2.11-1
11.2.11.1 Cause of Tornado and Tornado Driven Missiles 11.2.11-1
11.2.11.2 Detection of Tornado and Tornado Driven Missiles 11.2.11-1
11.2.11.3 Analysis of Tornado and Tornado Driven Missiles 11.2.11-1
11.2.11.4 Corrective Actions 11.2.11-13
11.2.11.5 Radiological Impact 11.2.11-13
11.2.12 Tip-Over of Vertical Concrete Cask 11.2.12-1
11.2.12.1 Cause of Cask Tip-Over 11.2.12-1
11.2.12.2 Detection of Cask Tip-Over 11.2.12-1
11.2.12.3 Analysis of Cask Tip-Over 11.2.12-1
11.2.12.4 Analysis of Canister and Basket for Cask Tip-Over Event 11.2.12-11

Table of Contents (Continued)

11.2.12.5 Corrective Actions 11.2.12-71
11.2.12.6 Radiological Impact 11.2.12-71
11.2.13 Full Blockage of Vertical Concrete Cask Air Inlets and Outlets 11.2.13-1
11.2.13.1 Cause of Full Blockage 11.2.13-1
11.2.13.2 Detection of Full Blockage 11.2.13-1
11.2.13.3 Analysis of Full Blockage 11.2.13-1
11.2.13.4 Corrective Actions 11.2.13-2
11.2.13.5 Radiological Impact 11.2.13-2
11.2.14 Canister Closure Weld Evaluation 11.2.14-1
11.2.15 Accident and Natural Phenomena Events Evaluation for Site Specific Spent Fuel 11.2.15-1
11.2.15.1 Accident and Natural Phenomena Events Evaluation for Maine Yankee Site Specific Spent Fuel 11.2.15-1
11.2.16 Fuel Rods Structural Evaluation for Burnup to 60,000 MWd/MTU 11.2.16-1
11.2.16.1 PWR Fuel Rod Evaluation 11.2.16-1
11.2.16.2 Thermal Evaluation of Fuel Rods 11.2.16-10
11.3 References 11.3-1

List of Figures

Figure 11.1.1-1 Concrete Temperature (°F) for Off-Normal Storage Condition 106°F Ambient Temperature (PWR Fuel) 11.1.1-3
Figure 11.1.1-2 Vertical Concrete Cask Air Temperature (°F) Profile for Off-Normal Storage Condition 106°F Ambient Temperature (PWR) Fuel) 11.1.1-4
Figure 11.1.1-3 Concrete Temperature (°F) for Off-Normal Storage Condition -40°F Ambient Temperature (PWR Fuel) 11.1.1-5
Figure 11.1.1-4 Vertical Concrete Cask Air Temperature (°F) Profile for Off-Normal Storage Condition -40°F Ambient Temperature (PWR Fuel) 11.1.1-6
Figure 11.1.3.1-1 Canister and Basket Finite Element Model 11.1.3-4
Figure 11.2.4-1 Concrete Cask Base Weldment 11.2.4-13
Figure 11.2.4-2 Concrete Cask Base Weldment Finite Element Model 11.2.4-14
Figure 11.2.4-3 Strain Rate Dependent Stress-Strain Curves for Concrete Cask Base Weldment Structural Steel 11.2.4-15
Figure 11.2.4-4 Acceleration Time-History of the Canister Bottom During the Concrete Cask 24-Inch Drop Accident With Static Strain Properties 11.2.4-16
Figure 11.2.4-5 Acceleration Time-History of the Canister Bottom During the Concrete Cask 24-Inch Drop Accident With Strain Rate Dependent Properties 11.2.4-17
Figure 11.2.4-6 Quarter Model of the PWR Basket Support Disk 11.2.4-18
Figure 11.2.4-7 Quarter Model of the BWR Basket Support Disk 11.2.4-19
Figure 11.2.4-8 Canister Finite Element Model for 60g Bottom End Impact 11.2.4-20
Figure 11.2.4-9 Identification of the Canister Sections for the Evaluation of Canister Stresses due to a 60g Bottom End Impact 11.2.4-21
Figure 11.2.6-1 Temperature Boundary Condition Applied to the Nodes of the Inlet for the Fire Accident Condition 11.2.6-4
Figure 11.2.11-1 Principal Dimensions and Moment Arms Used in Tornado Evaluation 11.2.11-14
Figure 11.2.12.4.1-1 Basket Drop Orientations Analyzed for Tip-Over Conditions – PWR 11.2.12-27
Figure 11.2.12.4.1-2 Fuel Basket/Canister Finite Element Model – PWR 11.2.12-28
Figure 11.2.12.4.1-3 Fuel Basket/Canister Finite Element Model – Canister 11.2.12-29
Figure 11.2.12.4.1-4 Fuel Basket/Canister Finite Element Model – Support Disk – PWR 11.2.12-30

List of Figures (Continued)

Figure 11.2.12.4.1-5 Fuel Basket/Canister Finite Element Model – Support Disk Loading – PWR 11.2.12-31
Figure 11.2.12.4.1-6 Canister Section Stress Locations 11.2.12-32
Figure 11.2.12.4.1-7 Support Disk Section Stress Locations – PWR – Full Model 11.2.12-33
Figure 11.2.12.4.1-8 PWR – 109.7 Hz Mode Shape 11.2.12-34
Figure 11.2.12.4.1-9 PWR – 370.1 Hz Mode Shape 11.2.12-35
Figure 11.2.12.4.1-10 PWR – 371.1 Hz Mode Shape 11.2.12-36
Figure 11.2.12.4.2-1 Fuel Basket Drop Orientations Analyzed for Tip-Over Condition - BWR 11.2.12-54
Figure 11.2.12.4.2-2 Fuel Basket/Canister Finite Element Model - BWR 11.2.12-55
Figure 11.2.12.4.2-3 Fuel Basket/Canister Finite Element Model - Support Disk - BWR 11.2.12-56
Figure 11.2.12.4.2-4 Support Disk Section Stress Locations - BWR - Full Model 11.2.12-57
Figure 11.2.12.4.2-5 BWR – 79.3 Hz Mode Shape 11.2.12-58
Figure 11.2.12.4.2-6 BWR – 80.2 Hz Mode Shape 11.2.12-59
Figure 11.2.12.4.2-7 BWR – 210.9 Hz Mode Shape 11.2.12-60
Figure 11.2.13-1 PWR Configuration Temperature History—All Vents Blocked 11.2.13-3
Figure 11.2.13-2 BWR Configuration Temperature History—All Vents Blocked 11.2.13-3
Figure 11.2.15.1.2-1 Two-Dimensional Support Disk Model 11.2.15-9
Figure 11.2.15.1.2-2 PWR Basket Impact Orientations and Case Study Loading Positions for Maine Yankee Consolidated Fuel 11.2.15-10
Figure 11.2.15.1.5-1 Two-Dimensional Beam Finite Element Model for Maine Yankee Fuel Rod 11.2.15-27
Figure 11.2.15.1.5-2 Mode Shape and First Buckling Shape for the Maine Yankee Fuel Rod 11.2.15-28
Figure 11.2.15.1.6-1 Two-Dimensional Beam Finite Element Model for a Fuel Rod with a Missing Grid 11.2.15-34
Figure 11.2.15.1.6-2 Modal Shape and First Buckling Mode Shape for a Fuel Rod with a Missing Grid 11.2.15-35
Figure 11.2.16-1 Three-Dimensional ANSYS Finite Element Model for UMS® Fuel Rod 11.2.16-7
Figure 11.2.16-2 Typical Three-Dimensional LS-DYNA Model for UMS® Fuel with a 1.23-Inch Bow 11.2.16-8
Figure 11.2-16-3 ANSYS Model for the PWR Fuel Rod High Burnup Condition 11.2.16-9

11.2.2 Failure of All Fuel Rods With a Ground Level Breach of the Canister

As no mechanistic failure of the canister occurs, there is no credible leakage of radioactive material from the canister. Therefore, this potential accident condition is not evaluated.

THIS PAGE INTENTIONALLY LEFT BLANK

A cut-off frequency of 210 Hz (PWR Class 1) and 190 Hz (PWR Class 2) is applied to filter the analysis results from the LS-DYNA models and determine the peak accelerations. The resulting calculated accelerations on the canister at the location of the top support disk and of the top of the structural lid are tabulated for all of the analysis cases that were run. The maximum accelerations at the two key locations on the canister for the PWR Class 1 and Class 2 configurations are:

Component Location	**Position Measured from the Bottom of the Concrete Cask (inches)**		**Acceleration (g)**	
	Class 1	**Class 2**	**Class 1**	**Class 2**
Top Support Disk	176.7	185.2	32.3	34.2
Top of the Canister Structural Lid	197.9	207.0	35.3	37.6

The impact accelerations for the vertical concrete cask tip-over on the Maine Yankee ISFSI pad site are observed to be slightly higher than those reported in Section 11.2.12.3.1 for the design-basis ISFSI pad. Therefore, peak accelerations are calculated for the top support disk and are evaluated with respect to the analysis presented in Section 11.2.12.4.1.

To determine the effect of the rapid application of the inertia loading for the support disk, a dynamic load factor (DLF) is computed using the method presented in Section 11.2.12.4. The DLF is computed to be 1.07 and 1.02 for PWR Class 1 and Class 2, respectively. Applying the DLFs to the 32.3g and 35.4g results in peak accelerations of 34.6g and 36.1g for the top support disk PWR Class 1 and Class 2, respectively. The DLFs for the canister lids are considered to be unity since the lids have significant in-plane stiffness and are considered to be rigid. Additional sensitivity evaluations considering varying values of the ISFSI concrete pad density have been performed. The results of those evaluations demonstrate that the maximum acceleration for the canister and basket are below 40g. Therefore, the maximum acceleration for the canister and basket for the cask tipover accident on the Maine Yankee site ISFSI pad is bounded by the 40g used in Section 11.2.12.4.1 (analysis of canister and basket for PWR configurations for tip-over event).

11.2.15.1.2 Parametric Study of Support Disk Evaluation for Maine Yankee Consolidated Fuel

A parametric study is performed to show that the PWR basket loaded with a Maine Yankee consolidated fuel lattice is bounded by the PWR basket design basis loading for a side impact condition. Only one consolidated fuel lattice, in a Maine Yankee Fuel Can, will be loaded in any single Transportable Storage Canister. However, Maine Yankee Fuel Cans holding other undamaged or damaged fuel can be loaded in the other three corner positions of the basket. Maine Yankee Fuel Cans may be loaded only in the four corner positions of the basket. See Figure

11.2.15.1.2-2 for corner positions. Therefore, the bounding case for Maine Yankee is the basket configuration with twenty (20) Maine Yankee fuel assemblies, three (3) fuel cans containing spent fuel, and one (1) fuel can containing consolidated fuel.

A two-dimensional ANSYS model is employed for the parametric study as shown in Figure 11.2.15.1.2-1. The load from a PWR fuel assembly is modeled as a pressure load at the inner surface of each support disk slot opening. The design basis fuel pressure loading (1g) is 12.26 psi. Based on the same design parameters (slot size = 9.272 in., disk thickness = 0.5 inch, and the number of disks = 30), the pressure load corresponding to a Maine Yankee standard CE 14×14 fuel assembly is 10.3 psi. The pressure load is 11.3 psi for a Maine Yankee fuel can holding an undamaged or damaged fuel assembly. For a Maine Yankee fuel can holding consolidated fuel the pressure load is 17.0 psi.

This study considers a 60g side impact condition for four different basket orientations: 0°, 18.22°, 26.28° and 45°, as shown in Figure 11.2.15.1.2-2. The 60g bounds the g-load for the PWR support disks (40g) due to the Vertical Concrete Cask tip-over accident as shown in Section 11.2.12.

A total of five cases are considered in the study. Inertial loads are applied to the support disk in all cases. The base case considers that all 24 fuel positions hold design basis PWR fuel assemblies. The other four cases (Cases 1 through 4) represent four possible load combinations for the placement of four Maine Yankee fuel cans in the corner positions, one of which holds consolidated fuel. The remaining twenty basket positions hold Maine Yankee standard 14×14 fuel assemblies. The basket loading positions are shown in Figure 11.2.15.1.2-2. The load combinations evaluated in the four Maine Yankee fuel can loading cases are:

Case	Basket Position 1	Basket Position 2	Basket Position 3	Basket Position 4
1	Consolidated	Damaged	Damaged	Damaged
2	Damaged	Consolidated	Damaged	Damaged
3	Damaged	Damaged	Damaged	Consolidated
4	Damaged	Damaged	Consolidated	Damaged

Table 11.2.15.1.2-1 provides a parametric comparison between the Base Case and the four cases evaluated, based on the maximum sectional stress in the support disk. As shown in the table, the maximum stress in the PWR basket support disk loaded with 20 standard fuel assemblies and four Maine Yankee fuel cans, including one holding consolidated fuel, is bounded by that for the support disk loaded with the design basis PWR fuel.

11.2.16 Fuel Rods Structural Evaluation for Burnup to 60,000 MWd/MTU

This section presents a structural evaluation of PWR fuel rods with a maximum burnup of 60,000 MWd/MTU for normal and accident conditions of storage.

During normal and off-normal conditions for the fuel in the canister, the loads applied to the fuel assembly are minimal and do not require further evaluation. The only significant axial loading the fuel assembly will experience is the 24-inch drop of the vertical concrete cask. The bounding lateral loading on the fuel assembly occurs during the tip-over accident condition. The lateral loading and axial loading conditions are evaluated for PWR fuel rods considering a bounding configuration of a grid spacer missing for an unsupported fuel rod length up to 60 inches. Based on results of the drop analysis presented in the following sections, PWR fuel assemblies with one or more grid spacers missing or damaged for an unsupported fuel rod length up to 60 inches are, therefore, considered to be undamaged assemblies for loading within the UMS® Universal Storage System.

11.2.16.1 PWR Fuel Rod Evaluation

End Drop Evaluation

This section presents the buckling evaluation for the UMS® Universal Storage System high burnup PWR fuel rods (peak rod average burnup of 62.5 GWd/MTU). In order to account for the cladding oxide layer, a conservative 120-micron thick layer is assumed to be removed from the reference clad in the rod structural evaluation. The 120-micron clad removal is conservative, as this value represents double the maximum oxide layer thickness listed for end-of-life PWR fuel rods in PNL-4835[62]. Applying a time-dependent oxide layer growth approximation to the PNL-4835-reported maximum thickness of 60 microns to account for an increase in burnup from standard (45 GWd/MTU) to high (62.5 GWd/MTU) yields a maximum end-of-life oxide layer in the range of 90 microns. As high burnup claddings are designed to reduce oxidation, actual layers are expected to be significantly lower (reported as low as 20 microns for >70 GWd/MTU M5 zircaloy clad). Therefore, a significant margin exists to the evaluated oxide layer levels.

These analyses show that the maximum stresses in the high burnup PWR fuel remain below the yield strength in the design basis accident events and confirm that the fuel rods will return to their original configuration prior to the end drop event. An end drop orientation is considered with an acceleration of 48g, which subjects the fuel rods to axial loading. This 48g acceleration bounds the maximum end drop acceleration calculated for the 24-inch concrete cask end drop.

In the end drop orientation, the fuel rods are laterally restrained by the grids and come into contact with the fuel assembly base. The only vertical constraint for the fuel rod is the base of the assembly. As opposed to employing a straight fuel assembly in the evaluation with all the grids present, the fuel assembly is considered to be bowed, and a fuel assembly grid may be missing and still meet the acceptable configuration for undamaged fuel. The evaluation of the PWR fuel rods is based on the following representative samples.

Fuel Assembly	Cladding Diameter (in)	Cladding Thickness (in)	Fuel Rod Pitch (in)	Gap Between Fuel Assembly and Fuel Tube Wall (in)
We 17x17	0.360	0.021	0.496	0.504
We 15x15	0.417	0.024	0.563	0.501
We 14x14	0.400	0.022	0.556	1.172
CE16x16	0.382	0.025	0.506	0.828
CE14x14	0.440	0.031	0.580	0.820
BW17x17	0.377	0.022	0.502	0.391
BW15x15	0.414	0.022	0.568	0.434

Review of the design basis fuel inventory indicates that the largest gap between a straight fuel assembly and the basket fuel tube inner wall could be 1.17 inches, corresponding to a 14 ×14 rod array having a minimum rod pitch of 0.556 inch and a minimum rod diameter of 0.40 inch inside a basket fuel cell, with a maximum inside dimension of 8.8 inches. It is physically possible for a fuel rod to have a bow of 1.17 inches and still be able to fit into the larger basket cell. Actual fuel assembly bow is expected to be much less than this maximum value and on the order of 0.125 to 0.25 inch. A missing grid implies that the axial distance between two adjacent grids could be as large as 60 inches. The bounding axial loading is the 24-inch bottom end drop, which identifies the bounding condition to be the 60-inch distance from the end of the fuel rod to the first grid. To implement a conservative bow of 1.23 inches (an increase of 0.06 inch over 1.17 inches) into the fuel assembly, the half-symmetry ANSYS model shown in Figure 11.2.16-1 is used. This model contains 0.5-inch long individual fuel pellets modeled with brick elements, with a 0.002-inch gap between the fuel pellet and the clad. The clad is modeled with shell elements. Elastic properties are used for the fuel pellet and the clad as shown in the following table.

	Modulus of Elasticity (10^6 psi)	Density (lb/in^3)
Rod Clad	10.47 [61]	0.237
Fuel Pellet	13 [48]*	0.396

* To further reduce the strength of the pellet, this is 50% of the value reported in Reference 48.

CONTAC52 elements are used to maintain a gap between the individual fuel pellets, as well as between the fuel pellet and the clad. Each pellet is independent and cannot provide any contribution to the clad bending stiffness or axial stiffness. As shown in Figure 11.2.16-1, the fuel rod is simply supported at each end. A static inertial loading is applied to develop a 1.23-inch lateral displacement. The purpose of the ANSYS model and solution is to provide the coordinates of the clad and pellets for the LS-DYNA model. This is accomplished by obtaining a static solution with the ANSYS model, and then using the option to update the coordinates of the nodes with the displacements from the solution. Four LS-DYNA models are considered that incorporate the bow of 1.23 inches. These cases envelop the range of the cross-sectional moments for the PWR fuel rods and the grid spacing at the bottom of the fuel assembly as summarized in the following table.

Case	Lowest Grid Spacing (inches)	Cross-Sectional Moment of Inertia	Fuel Rod OD (inch)	Fuel Clad Thickness (w/o Oxide Effect) (inch)
1	60	Minimum	0.36	0.021
2	33	Minimum	0.36	0.021
3	25	Minimum	0.36	0.021
4	60	Maximum	0.44	0.031

In each case, the thickness of the clad was reduced by 120 microns (0.0047 inch). Each case requires a separate ANSYS model and LS-DYNA model to represent unique coordinates or boundary conditions. Figure 11.2.16-2 shows a typical LS-DYNA model. The effect of the grid was imposed by constraining a node on the clad in the lateral direction. While the grid closest to the bottom end fitting can be missing, the fuel rod, in order to experience an axial loading, must bear against the bottom end fitting. The contact of the fuel rod with the end fitting, which is a perforated component, is sufficient to prevent arbitrary lateral motion of the end of the rod that is in contact with the end fitting. The LS-DYNA model employs the same nodes and elements as the ANSYS model (with the incorporation of the 1.23-inch bow). The shell elements in LS-DYNA use additional integration points to ensure that the maximum shear stress at the surface of the shell elements is accurately computed. Elastic properties used in the LS-DYNA model are the same as those used in the ANSYS model. An initial downward velocity of 527 in/sec (corresponding to a 30-foot drop) is assigned to all nodes in the model. This significantly bounds the initial momentum of the rods as compared to the 24-inch cask bottom end drop. The deceleration applied to the base of the model has a duration of 0.05 second and a 48g maximum value, which provide bounding acceleration for the 24-inch end drop of the concrete cask.

The LS-DYNA analyses were performed for a duration of 0.15 second to capture the response of the fuel after the 0.05-second loading duration. Post-processing each analysis result identifies the maximum shear stress occurring at the shell surface. The maximum shear stress result from LS-DYNA is factored by two to determine the maximum stress intensity. The maximum stress intensity is shown for each case in the following table.

Case	Maximum Stress Intensity (ksi) at Midspan of Lowest Grid Spacing	Margin of Safety Against Yield Strength
1	22.8	+2.05
2	34.8	+1.00
3	17.0	+3.09
4	15.2	+3.58

The temperature of the fuel at the bottom end of the basket is bounded by 752°F (400°C); and from Reference 61, the static yield strength for irradiated ziracloy at 752°F is 69.6 ksi. This conservatively neglects any strengthening effect due to the dynamic loading for which yield strength values are reported in Reference 61. The case using the 33-inch spacing in conjunction with the minimal cross-section (Case 2) is identified as the bounding case. The lateral response for the 60-inch grid spacing is limited since the period of the first lateral mode shape is sufficiently large to allow the maximum lateral displacement to occur significantly after the loading has ceased. For this reason, the shorter spacing of 25 inches was also analyzed (Case 3) to confirm that the 33-inch spacing (the largest to occur without missing a grid in the fuel assembly) resulted in the maximum stress intensity. The load duration used in the evaluation bounds (is larger than) the duration of lower drop heights whose accelerations are less than 48g's. Comparing Case 4 to Cases 1 and 2, the effect of the maximum cross-sectional moment (the ratio of the maximum cross-sectional moment to the minimal cross-sectional moment is approximately 2.7) indicates that the cross-sectional moment has more influence than the grid spacing on the maximum stress.

These results confirm that high burnup PWR fuel with one missing grid will remain undamaged for design basis cask end drop load conditions.

Side Drop Evaluation

The analyzed bounding fuel rod length of 60.0 inches envelopes all fuel types and includes the condition with a missing support grid in the fuel assembly. This configuration is evaluated for a 60g side drop. During a side drop, the maximum deflection of a fuel rod is based on the fuel rod spacing

of the fuel assembly. Assuming a 17×17 array (fuel assembly with the maximum number of rods in Table 6.1-1), the maximum fuel rod deflection, including the 120-micron oxide layer, is:

$$(17-1) \times (0.496-0.36+2\times120\times10^{-6}\times39.37) = 2.33 \text{ in.}$$

The side drop loading is evaluated for three fuel rods, which corresponds to the limits of the stress modulus Z (ratio of the cross-sectional moment of inertia to the maximum radius to relate the maximum fiber stress (S) to the bending moment (M), S=M/Z) and the maximum span, as shown in the table below.

Case	Rod diameter (inches)	Clad thickness (inches)	Z (in^3) (10^{-3})	Span (inches)
CE14×14	0.440	0.031	3.18	16.8
WE15×15	0.417	0.024	2.20	26.2
WE17×17	0.360	0.0205	1.33	20.6

ANSYS is used to perform a static analysis with a lateral loading of 60g. The model is shown in Figure 11.2.16-3. The fuel rod is modeled with beam elements having the properties for the fuel clad taking into account the reduction of the outer radius by 0.0047 inch (120 microns). The density of the beam element material was based on the zircaloy clad (0.237 lb/in^3) and the pellet density (0.396 lb/in^3). The lateral constraints in Figure 11.2.16-3 show the location of the grids used in the model and the distance from the end of the fuel rod to the first support is 60 inches. The analyses confirm that the rod lateral displacement is 2.33 inches (for the lateral restraint configuration shown in Figure 11.2.16-3), which results in the fuel rod being supported with the 60-inch distance between adjacent grids. Therefore, the location of the unsupported span along the fuel rod is not significant. The spacing for the adjacent grids is shown in the preceding table.

To represent the maximum gap of 2.33 inches, which the fuel rod can displace in the side drop, CONTAC52s were modeled at each node. The gap for each CONTAC52 was set to 2.33 inches to limit the lateral displacement of the fuel rod to 2.33 inches. The gap stiffness for each CONTAC52 was 10^6 lb/in, and the effect of this stiffness, whether larger or smaller, would not influence the maximum stress. The maximum stress in the fuel rods is shown in the following table and the allowable is the yield strength at 752°F (69.6 ksi).

Case	Maximum Stress (ksi)	Margin of Safety Against Yield Strength
CE14×14	37.1	+0.88
WE15×15	48.1	+0.45
WE17×17	46.3	+0.50

This confirms that the PWR fuel rod subject to high burnup will remain intact for a side drop condition, which bounds the tip-over accident condition.

Figure 11.2.16-1 Three-Dimensional ANSYS Finite Element Model for UMS® Fuel Rod

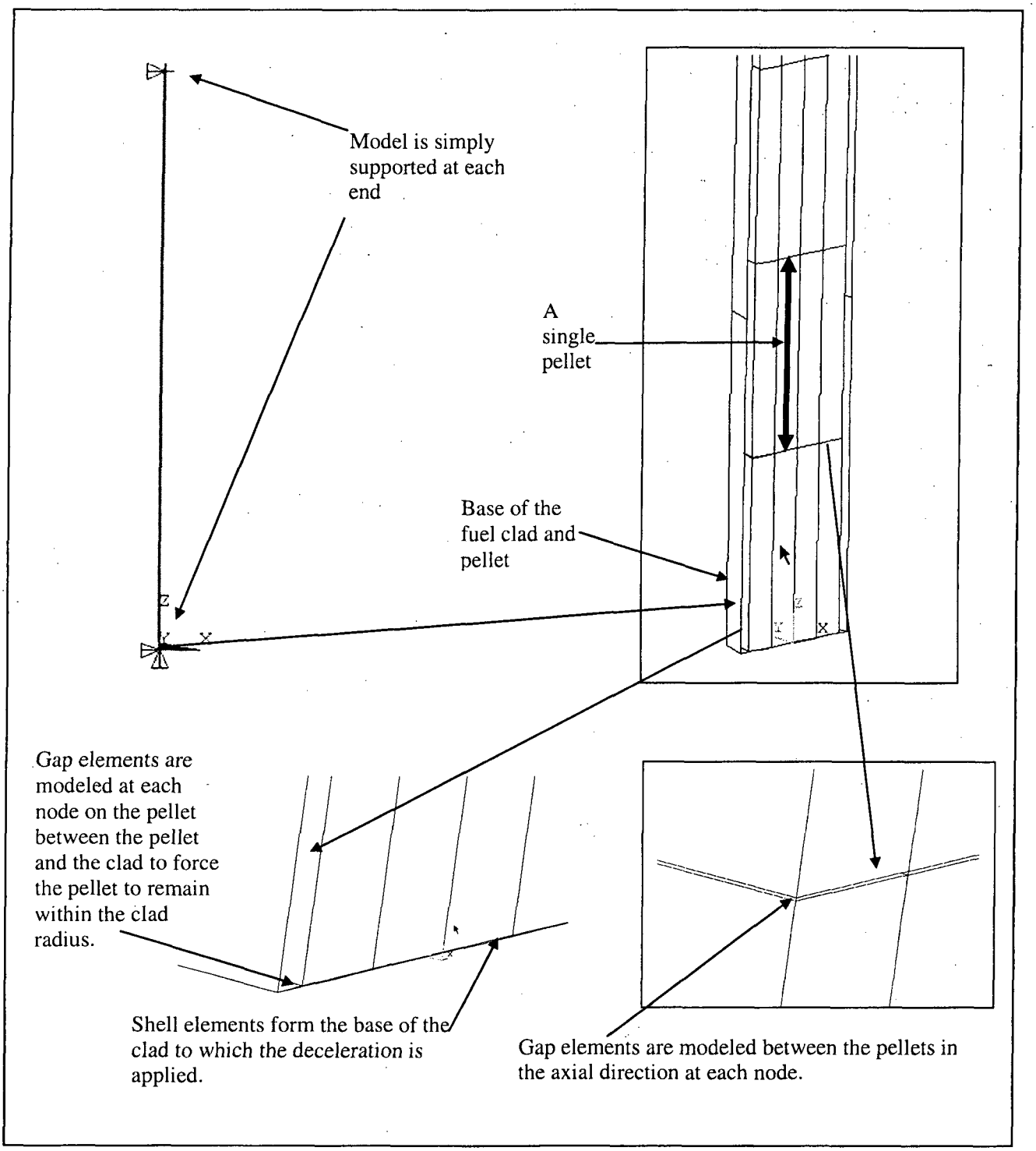

Figure 11.2.16-2 Typical Three-Dimensional LS-DYNA Model for UMS® Fuel with a 1.23-Inch Bow

Fuel rod with 1.23-inch bow with the missing grid at the lowest spacing (Case 1)

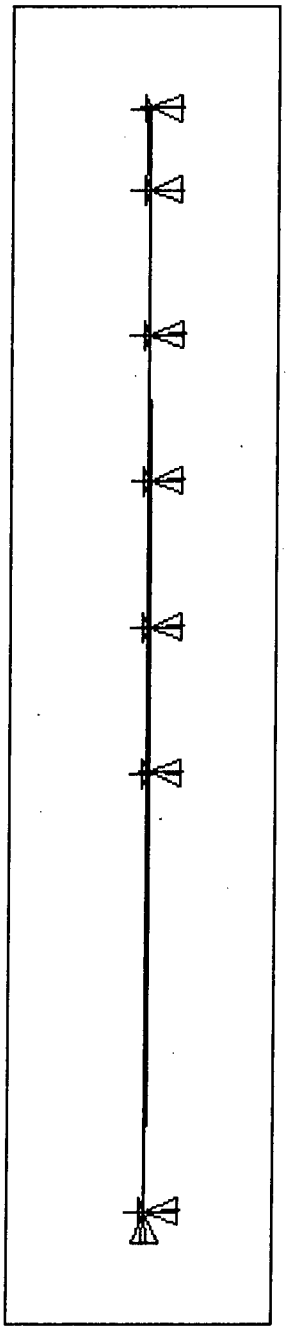

Fuel rod with 1.23-inch bow with all grids (Case 3)

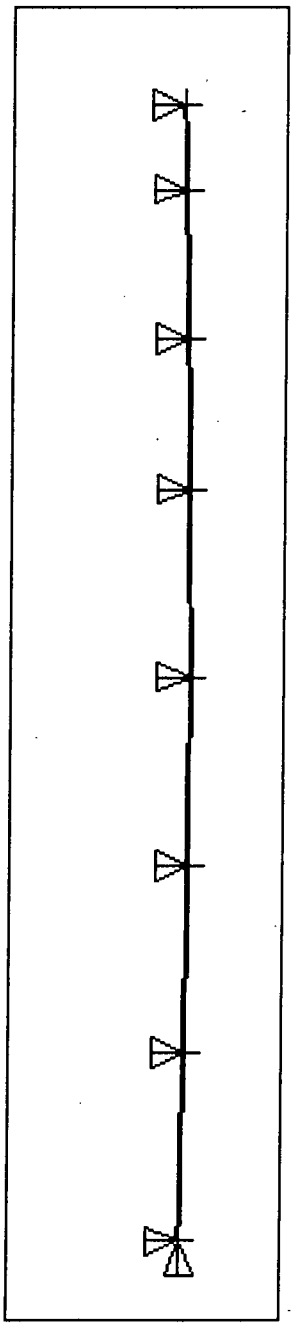

Figure 11.2.16-3 ANSYS Model for the PWR Fuel Rod High Burnup Condition

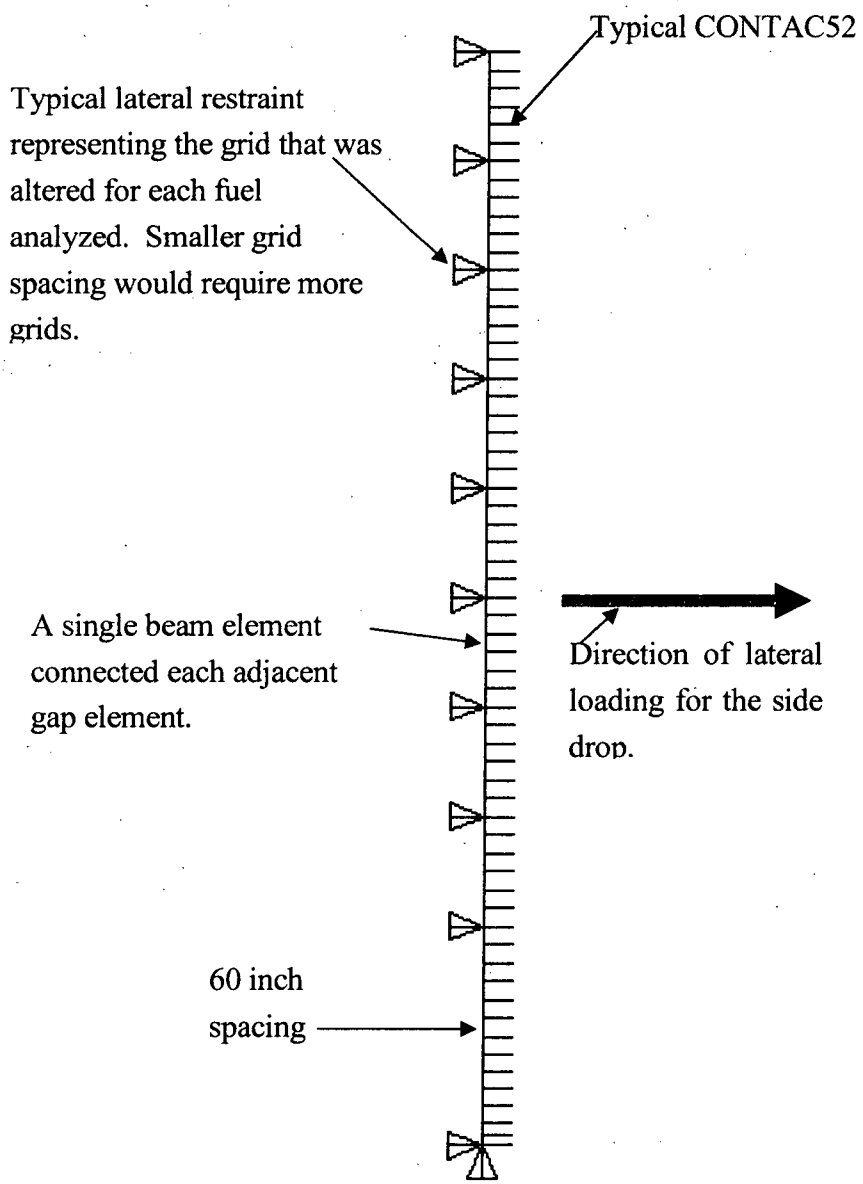

11.2.16.2 Thermal Evaluation of Fuel Rods

The UMS® system limits normal storage condition fuel cladding temperatures to levels below zirconium alloy or stainless steel cladding temperature limits; therefore, degradation is not expected to occur below this temperature in an inert gas environment.

As shown in Chapter 4, fuel cladding temperature limits for PWR fuel rods have been established at 400°C (752°F) for normal and off-normal conditions of storage, including transfer operations, and 570°C (1,058°F) for accident conditions. Chapter 4 demonstrates that the maximum fuel cladding temperatures are well below the temperature limits for all design conditions of storage.

56. ASME Section II Part D – Properties, American Society of Mechanical Engineers, United Engineering Center, 345 East 47th Street, New York, 1995/1995 Addenda.

57. Impact Dynamics, eds. Z.A. Zukas et al, John Wiley & Sons, New York.

58. "Seismic Analysis of Safety Related Nuclear Structures and Commentary", ASCE 4-98, American Society of Civil Engineers.

59. "Combining Modal Responses and Spatial Components in Seismic Response Analysis," Regulatory Guide 1.92, Revision 1, February 1976, U.S. Nuclear Regulatory Commission, Office of Standards Development.

60. ISG-15, "Materials Evaluation," Interim Staff Guidance–15, Nuclear Regulatory Commission, January 2001.

61. "Mechanical Properties for Irradiated Zircaloy," K. J. Geelhood and C. E. Beyer, Transactions of the American Nuclear Society, Volume 93, 2005.

62. PNL-4835, "Technical Basis for Storage of Zircaloy-Clad Spent Fuel in Inert Gases," Pacific Northwest Laboratory, A. B. Johnson, Jr. and E. R. Gilbert, September 1983.

THIS PAGE INTENTIONALLY LEFT BLANK

Chapter 12

12.0 OPERATING CONTROLS AND LIMITS

This chapter identifies operating controls and limits, technical parameters and surveillance requirements imposed to ensure the safe operation of the NAC-UMS® System.

Controls used by NAC International (NAC) as part of the NAC-UMS® design and fabrication are provided in the NAC Quality Assurance Manual and Quality Procedure. The NAC Quality Assurance Program is discussed in Chapter 13.0. If procurement and fabrication of the NAC-UMS® System is performed by others, a Quality Assurance Program prepared in accordance with 10 CFR 72 Subpart G shall be implemented. Site specific controls for the organization, administrative system, procedures, record keeping, review, audit and reporting necessary to ensure that the NAC-UMS® storage system installation is operated in a safe manner, are the responsibility of the user of the system.

12.1 Administrative and Operating Controls and Limits for the NAC-UMS® System

The NAC-UMS® Storage System operating controls and limits are summarized in Table 12-1. Appendix A of the CoC Number 1015 Technical Specifications provides the proposed Limiting Conditions for Operations (LCO). The Approved Contents and Design Features for the NAC-UMS® System are presented in Appendix B of the CoC Number 1015 Technical Specifications. The Bases for the specified controls and limits are presented in Appendix 12C.

Section 3.0 of Appendix B presents Design Features that are important to the safe operation of the NAC-UMS® System, but that are not included as Technical Specifications. These include items which are singular events, those that cannot be readily determined or re-verified at the time of use of the system, or that are easily implemented, verified and corrected, if necessary, at the time the action is undertaken.

12.2 Administrative and Operating Controls and Limits for SITE-SPECIFIC FUEL

This section describes the administrative and operating controls and limits placed on the loading of fuel assemblies that are unique to specific reactor sites. SITE-SPECIFIC FUEL configurations result from conditions that occurred during reactor operations, participation in research and development programs, testing programs intended to improve reactor operations, from the

placement of control components or other items within the fuel assembly and from the disposition of damaged fuel assemblies or fuel rods.

SITE-SPECIFIC FUEL assembly configurations are either shown to be bounded by the analysis of the standard design basis fuel assembly configuration of the same type (PWR or BWR), or are shown to be acceptable contents by specific evaluation of the configuration. Separate evaluation may establish different limits, which are maintained by administrative controls for preferential loading. The preferential loading controls take advantage of design features of the UMS® Storage System to allow the loading of fuel configurations that are not specifically considered in the design basis fuel evaluation.

Unless specifically excepted, SITE SPECIFIC FUEL must meet all of the conditions specified for the design basis fuel presented in Table 12-1.

12.2.1 Operating Controls and Limits for Maine Yankee SITE-SPECIFIC FUEL

The fuel design used at Maine Yankee is the Combustion Engineering (CE) 14 × 14 fuel assembly. The CE 14 × 14 fuel assembly is one of those included in the design basis evaluation of the UMS® Storage System as shown in Table B2-2 of Appendix B of Certificate of Compliance No. 72-1015. The estimated Maine Yankee SITE-SPECIFIC FUEL inventory is shown in Table B2-6. Except as noted in this section, the spent fuel in this inventory meets the Fuel Assembly Limits provided in Table B2-1.

As shown in Table B2-6, certain of the Maine Yankee fuel has characteristics, such as fuel assembly lattice configurations, different from STANDARD FUEL, from PWR UNDAMAGED FUEL ASSEMBLIES - including CONSOLIDATED FUEL, DAMAGED FUEL and fuel with higher burnup or enrichment, that differs from the characteristics of the fuel considered in the design basis. As shown in Table B2-6, certain fuel configurations must be preferentially loaded in corner or peripheral fuel tube positions in the fuel basket based on the shielding, criticality or thermal evaluation of the fuel configuration.

The corner positions are used for the loading of fuel configurations with missing fuel rods, and for DAMAGED FUEL and CONSOLIDATED FUEL in the MAINE YANKEE FUEL CAN. Specification for placement in the corner fuel tube positions results primarily from shielding or criticality evaluations of the designated fuel configurations.

Spent fuel having a burnup from 45,000 to 50,000 MWD/MTU is assigned to peripheral locations, and may require loading in a Maine Yankee fuel can. The interior locations must be loaded with fuel that has lower burnup and/or longer cool times in order to maintain the design basis heat load and component temperature limits for the basket and canister.

The Fuel Assembly Limits for the Maine Yankee SITE SPECIFIC FUEL are shown in Table B2-7 of Appendix B of the CoC Number 1015 Technical Specifications. Part A of the table lists the STANDARD, UNDAMAGED FUEL ASSEMBLY and SITE SPECIFIC FUEL that does not require preferential loading.

Part B of the table lists the SITE SPECIFIC FUEL configurations that require preferential loading due to the criticality, shielding or thermal evaluation. The loading pattern for Maine Yankee SITE SPECIFIC FUEL that must be preferentially loaded is presented in Section B 2.1.2. The preferential loading controls take advantage of design features of the UMS® Storage System to allow the loading of fuel configurations that may have higher burnup or additional hardware or fuel source material that is not specifically considered in the design basis fuel evaluation.

Fuel assemblies with a Control Element Assembly (CEA) or a CEA plug inserted are loaded in a Class 2 canister and basket due to the increased length of the assembly with either of these components installed. However, these assemblies are not restricted as to loading position within the basket.

The Transportable Storage Canister loading procedures for Maine Yankee SITE SPECIFIC FUEL are administratively controlled in accordance with the requirements of Section B 2.1.2 for the loading of: (1) a fuel configuration with removed fuel or poison rods, (2) a MAINE YANKEE FUEL CAN, or (3) fuel with burnup between 45,000 MWD/MTU and 50,000 MWD/MTU.

Table 12-1 NAC-UMS® System Controls and Limits

Control or Limit	Applicable Technical Specification	Condition or Item Controlled
1. Fuel Characteristics	Table B2-1	Type and Condition
	Table B2-2	Class, Dimensions and Weight for PWR
	Table B2-3	Class, Dimensions and Weight for BWR
	Table B2-4	Minimum Cooling Time for PWR Fuel
	Table B2-5	Minimum Cooling Time for BWR Fuel
	Table B2-7	Maine Yankee Site Specific Fuel Limits
	Table B2-8	Minimum Cooling Time for Maine Yankee Fuel – No CEA
	Table B2-9	Minimum Cooling Time for Maine Yankee Fuel – With CEA
2. Canister	LCO 3.1.4	Time in Transfer Cask (fuel loading)
Fuel Loading	Table B2-1	Weight and Number of Assemblies
	Table B2-7	Maine Yankee Site Specific Fuel Limits
	Table B2-4	Minimum Cooling Time for PWR Fuel
	Table B2-5	Minimum Cooling Time for BWR Fuel
Drying	LCO 3.1.2	Vacuum Drying Pressure
Backfilling	LCO 3.1.3	Helium Backfill Pressure
Sealing	LCO 3.1.5	Helium Leak Rate
Vacuum	LCO 3.1.1	Time in Vacuum Drying
External Surface	LCO 3.2.1	Level of Contamination
Unloading	Note 1	Fuel Cooldown Requirement
3. Concrete Cask	LCO 3.2.2	Surface Dose Rates
	Note 1	Cask Spacing
	Note 2	Cask Handling Height
4. Surveillance	LCO 3.1.6	Heat Removal System
5. Transfer Cask	B 3.4(8)	Minimum Temperature
6. ISFSI Concrete Pad	B3.4.1(6) B3.4.2(7)	Seismic Event Performance

1. Procedure and/or limits are presented in the Operating Procedures of Chapter 8.
2. Lifting height and handling restrictions are provided in Section A5.6 of Appendix A.

APPENDIX 12C

TECHNICAL SPECIFICATION BASES FOR THE NAC-UMS® SYSTEM

Appendix 12C
`Table of Contents

C 1.0 Introduction 12C1-1

C 2.0 APPROVED CONTENTS 12C2-1
C 2.1 Fuel to be Stored in the NAC-UMS® SYSTEM 12C2-1

C 3.0 LIMITING CONDITION FOR OPERATION (LCO) APPLICABILITY 12C3-1
SURVEILLANCE REQUIREMENT (SR) APPLICABILITY 12C3-4
C 3.1 NAC-UMS® SYSTEM Integrity 12C3-9
C 3.1.1 CANISTER Maximum Time in Vacuum Drying 12C3-9
C 3.1.2 CANISTER Vacuum Drying Pressure 12C3-14
C 3.1.3 CANISTER Helium Backfill Pressure 12C3-17
C 3.1.4 CANISTER Maximum Time in the TRANSFER CASK 12C3-20
C 3.1.5 CANISTER Helium Leak Rate 12C3-25
C 3.1.6 CONCRETE CASK Heat Removal System 12C3-28

C 3.2 NAC-UMS® SYSTEM Radiation Protection 12C3-32
C 3.2.1 CANISTER Surface Contamination 12C3-32
C 3.2.2 CONCRETE CASK Average Surface Dose Rates 12C3-35

C 3.3 NAC-UMS® SYSTEM Criticality Control 12C3-38
C 3.3.1 Dissolved Boron Concentration 12C3-38

C 2.0 APPROVED CONTENTS

C 2.1 Fuel to be Stored in the NAC-UMS® SYSTEM

BASES

BACKGROUND	The NAC-UMS® SYSTEM design requires specifications for the spent fuel to be stored, such as the type of spent fuel, minimum and maximum allowable enrichment prior to irradiation, maximum burnup, minimum acceptable post-irradiation cooling time prior to storage, maximum decay heat, and condition of the spent fuel (i.e., UNDAMAGED FUEL). Other important limitations are the dimensions and weight of the fuel assemblies. The approved contents, which can be loaded into the NAC-UMS® SYSTEM are specified in Section B2.0 of Appendix B. Specific limitations for the NAC-UMS® SYSTEM are specified in Table B2-1 of Appendix B. These limitations support the assumptions and inputs used in the thermal, structural, shielding, and criticality evaluations performed for the NAC-UMS® SYSTEM.
APPLICABLE SAFETY ANALYSES	To ensure that the shield lid is not placed on a CANISTER containing an unauthorized fuel assembly, facility procedures require verification of the loaded fuel assemblies to ensure that the correct fuel assemblies have been loaded in the canister.
APPROVED CONTENTS	C 2.1.1 Approved Contents Section B2.0 refers to Table B2-1 in Appendix B for the specific fuel assembly characteristics for the PWR or BWR fuel assemblies authorized for loading into the NAC-UMS® SYSTEM. These fuel assembly characteristics include parameters such as cladding material, minimum and maximum enrichment, decay heat generation, post-irradiation cooling time, burnup, and fuel assembly length, width, and weight. Tables B2-2 through B2-5 are referenced from Table B2-1 and provide additional specific fuel characteristic limits for the fuel assemblies based on the fuel assembly class type, enrichment, burnup and cooling time.

(continued)

APPROVED CONTENTS (continued)	The fuel assembly characteristic limits of Tables B2-1 through B2-5 must be met to ensure that the thermal, structural, shielding, and criticality analyses supporting the NAC-UMS® SYSTEM Safety Analysis Report are bounding. C 2.1.2 Approved Contents Section B2.0 in Appendix B requires preferential loading of Maine Yankee SITE SPECIFIC FUEL assemblies with significantly different post-irradiation cooling times. This preferential loading is required to prevent a cooler assembly from heating up due to being surrounded by hotter fuel assemblies. For the purposes of complying with this Approved Contents limit, only fuel assemblies with post-irradiation cooling times differing by one year or greater need to be loaded preferentially. This is based on the fact that the heat-up phenomenon can only occur with significant differences in decay heat generation characteristics between adjacent fuel assemblies having different post-irradiation cooling times.
APPROVED CONTENT LIMITS AND VIOLATIONS	C 2.2.1 If any Approved Contents limit of B2.1.1 or B2.1.2 in Appendix B is violated, the limitations on fuel assemblies to be loaded are not met. Action must be taken to place the affected fuel assembly(s) in a safe condition. This safe condition may be established by returning the affected fuel assembly(s) to the spent fuel pool. However, it is acceptable for the affected fuel assemblies to temporarily remain in the NAC-UMS® SYSTEM, in a wet or dry condition, if that is determined to be a safe condition. C 2.2.2 and C 2.2.3 NRC notification of the Approved Contents limit violation is required within 24 hours. A written report on the violation must be submitted to the NRC within 30 days. This notification and written report are independent of any reports and notification that may be required by 10 CFR 72.216.
REFERENCES	1. FSAR, Sections 2.1, 4.4; Chapters 5 and 6.

C 3.1 NAC-UMS® SYSTEM Integrity

C 3.1.1 CANISTER Maximum Time in Vacuum Drying

BASES

BACKGROUND

A TRANSFER CASK with an empty CANISTER is placed into the spent fuel pool and loaded with fuel assemblies meeting the requirements of the Approved Contents limits. A shield lid is then placed on the CANISTER. The TRANSFER CASK and CANISTER are raised out of the spent fuel pool. The TRANSFER CASK and CANISTER are then moved to a preparation area, where dose rates are measured. The CANISTER shield lid is welded to the CANISTER shell, and the lid weld is examined and pressure tested. The water is drained from the CANISTER, and CANISTER cavity vacuum drying is performed. The CANISTER cavity is then backfilled with helium, and the CANISTER drain and vent port covers are installed, welded and examined. The shield lid welds are then helium leak tested using the evacuated envelope method, per ANSI N14.5. The structural lid is installed, welded and examined. Dose and contamination measurements are completed prior to moving the TRANSFER CASK and CANISTER in position to transfer the CANISTER to the CONCRETE CASK. After the CANISTER is transferred, the CONCRETE CASK is then moved to the ISFSI. Average CONCRETE CASK dose rates are measured at the ISFSI pad.

Limiting the elapsed time from the end of CANISTER draining operations through dryness verification testing and subsequent backfilling of the CANISTER with helium ensures that the short-term temperature limits established in the Safety Analyses Report for the spent fuel cladding and CANISTER materials are not exceeded and that the test duration of 30 days (720 hours) considered in PNL-4835 for zirconium alloy clad fuel for storage in air is not exceeded.

A CANISTER containing a fuel assembly with burnup greater than 45 GWd/MTU is limited to nine (9) or fewer cooling/vacuum drying cycles performed in accordance with LCO 3.1.1.2. Each cooling/ vacuum drying cycle will exceed the cladding temperature change limit of 117°F (65°C). Excessive cladding temperature cycles (>10) of high burnup fuel could result in undesirable hydride reorientation as described in ISG-11, Revision 3. This cooling/vacuum drying cycle limitation represents an alternative to ISG-11, Revision 3 criteria, and is based on the physical testing performed and reported by F. Kammenzind, B. M. Berquist and R. Bajaj, "The Long Range Migration of Hydrogen Through Zircaloy in Response to Tensile and Compressive Stress Gradients." The test program investigated hydrogen transfer in stressed and thermally cycled test specimens. Test results show the following:

(continued)

BACKGROUND (continued)

- Zero hydrogen transfer for test specimens subject to 25 thermal cycles between 260°C and 50°C at a stress level of 160 MPa.
- Zero hydrogen transfer for test specimens subject to 10 thermal cycles between 260°C and 50°C at a stress level of 241 MPa.

Test results for temperature cycles to maximum temperatures of 316°C and 371°C show small levels of hydrogen transfer (i.e., 2.7 to 7.2 ppm) for 10 and 25 thermal cycles.

Consideration of this data, as referenced by ISG-11, Revision 3, indicates that the minimum temperature change used in this test program, 210°C (260°C -50°C), which is significantly greater than the 65°C temperature change limit proposed as an acceptable alternative for the ISG guidance, does not introduce hydrogen transfer. Thus, the stored fuel and its cladding integrity are maintained and may be retrieved using normal means of handling.

APPLICABLE SAFETY ANALYSIS

Limiting the total time for loaded CANISTER vacuum drying operations ensures that the short-term temperature limits for the fuel cladding and CANISTER materials are not exceeded. If vacuum drying operations are not completed in the required time period, the CANISTER is backfilled with helium and cooled for a minimum of 24 hours of in-pool cooling or forced air cooling.

Analyses reported in the Safety Analysis Report conclude that spent fuel cladding and CANISTER material short-term temperature limits will not be exceeded for total elapsed time in the vacuum drying operation and in the TRANSFER CASK with the CANISTER filled with helium. Since the rate of heat up is slower for lower total heat loads, the time required to reach component limits is longer than for the design basis heat load. Consequently, longer time limits are specified for heat loads below the design basis for the PWR and BWR fuel configurations as shown in LCO 3.1.1. As shown in the LCO, for total heat loads not specified, the time limit for the next higher specified heat load is conservatively applied. Analyses show that the fuel cladding and CANISTER component temperatures are below the allowable temperatures for the time durations specified from the completion of CANISTER draining, or from the end of in-pool cooling or forced air cooling, through the completion of vacuum drying, dryness verification testing per LCO 3.1.2, and the helium backfill process per LCO 3.1.3[1].

(continued)

APPLICABLE SAFETY ANALYSIS (continued)	Following completion of helium backfill, the fuel cladding and CANISTER temperatures are also maintained within allowable limits for the time(s) specified in LCO 3.1.4 for the helium-filled CANISTER in the TRANSFER CASK through completion of the transfer of the CANISTER to the CONCRETE CASK.
LCO	Limiting the length of time for vacuum drying operations through completion of the helium backfill operations for the CANISTER ensures that the spent fuel cladding and CANISTER material temperatures remain below the short-term temperature limits for the NAC-UMS® SYSTEM. Limiting a CANISTER containing a fuel assembly with burnup greater than 45 GWd/MTU to nine (9) or fewer cooling/vacuum drying cycles, per LCO 3.1.1.2, where the fuel cladding temperature change is greater than 117°F (65°C) controls hydride reorientation, maintains fuel rod cladding structural integrity and assures fuel retrievability.
APPLICABILITY	The elapsed time restrictions for vacuum drying operations on a loaded CANISTER apply during LOADING OPERATIONS from the completion of CANISTER draining operations through completion of dryness verification testing per LCO 3.1.2 and the completion of the helium backfill process per LCO 3.1.3[1]. LCO 3.1.1 is not applicable to TRANSPORT OPERATIONS or STORAGE OPERATIONS.
ACTIONS	A note has been added to the ACTIONS, which states that, for this LCO, separate Condition entry is allowed for each NAC-UMS® SYSTEM. This is acceptable, since the Required Actions for each Condition provide appropriate compensatory measures for each NAC-UMS® SYSTEM not meeting the LCO. Subsequent NAC-UMS® SYSTEMS that do not meet the LCO are governed by subsequent Condition entry and application of associated Required Actions. <u>A.1</u> If the LCO time limit is exceeded, the CANISTER will be backfilled with helium to a pressure of 0 psig (+1,-0). <u>AND</u>

(continued)

ACTIONS
(continued)

A.2.1.1

The TRANSFER CASK containing the loaded CANISTER shall be placed in the spent fuel pool. For in-pool cooling operations with the TRANSFER CASK and loaded CANISTER submerged, the annulus fill system is not required to be operating. If only the loaded CANISTER is submerged for in-pool cooling, the annulus fill system is required to be operating.

AND

A.2.1.2

The TRANSFER CASK and loaded CANISTER shall be maintained in the spent fuel pool with the water level above the top of the CANISTER, and a maximum water temperature of 100°F for a minimum of 24 hours prior to the restart of LOADING OPERATIONS.

OR

A.2.2.1

A cooling air flow of 375 CFM at a maximum temperature of 76°F shall be initiated. The airflow will be routed to the annulus fill/drain lines of the TRANSFER CASK and will flow through the annulus and cool the CANISTER.

AND

A.2.2.2

The cooling air flow shall be maintained for a minimum of 24 hours prior to restart of LOADING OPERATIONS.

(continued)

SURVEILLANCE REQUIREMENTS

SR 3.1.1.1

The elapsed time shall be monitored from completion of CANISTER draining through completion of the vacuum dryness verification testing per LCO 3.1.2 and completion of the helium backfill process per LCO 3.1.3[(1)]. Monitoring the elapsed time ensures that if the drying process is not completed in the prescribed time, the CANISTER can be backfilled with helium and in-pool or forced air cooling operations initiated in a timely manner during LOADING OPERATIONS to prevent fuel cladding and CANISTER materials from exceeding short-term temperature limits.

SR 3.1.1.2

The elapsed time shall be monitored from the end of in-pool cooling or forced air cooling of the CANISTER through completion of vacuum dryness verification testing per LCO 3.1.2 and the completion of the helium backfill process per LCO 3.1.3[(1)]. Monitoring the elapsed time ensures that if the drying process is not completed in the prescribed time, the CANISTER can be backfilled with helium and in-pool or forced air cooling initiated in a timely manner during LOADING OPERATIONS to prevent the fuel cladding and CANISTER materials from exceeding short-term temperature limits.

REFERENCES

1. FSAR Sections 4.4 and 8.1.

Note:

(1) LCO 3.1.1, SR 3.1.1.1 and SR 3.1.1.2 specify time limitations and monitoring requirements for the allowable duration(s) from completion of draining of the CANISTER, or from the completion of in-pool or forced air cooling of the CANISTER, through completion of vacuum drying testing and the "introduction" of helium. Clarifications have been added to the Bases of LCO 3.1.1 to highlight that the introduction and start of helium backfill defines the system configuration that is established following completion of final helium pressure adjustment of the CANISTER as specified in LCO 3.1.3.

C 3.1 NAC-UMS® SYSTEM Integrity

C 3.1.2 CANISTER Vacuum Drying Pressure

BASES

BACKGROUND	A TRANSFER CASK with an empty CANISTER is placed into the spent fuel pool and loaded with fuel assemblies meeting the requirements of the Approved Contents Limits. A shield lid is then placed on the CANISTER. The TRANSFER CASK and CANISTER are raised out of the spent fuel pool. The TRANSFER CASK and CANISTER are then moved to a preparation area, where dose rates are measured. The CANISTER shield lid is welded to the CANISTER shell, and the lid weld is examined and pressure tested. The water is drained from the CANISTER, and CANISTER cavity vacuum drying is performed. The CANISTER cavity is then backfilled with helium, and the CANISTER drain and vent port covers are installed, welded and examined. The shield lid weld is then helium leak tested using the evacuated envelope method, per ANSI N14.5. The structural lid is installed, welded and examined. Dose and contamination measurements are completed prior to moving the TRANSFER CASK and CANISTER in position to transfer the CANISTER to the CONCRETE CASK. After the CANISTER is transferred, the CONCRETE CASK is then moved to the ISFSI. Average CONCRETE CASK dose rates are measured at the ISFSI pad. CANISTER cavity vacuum drying is utilized to remove residual moisture from the CANISTER cavity after the water is drained from the CANISTER. Any water not drained from the CANISTER cavity evaporates due to the vacuum. This is aided by the temperature increase, due to the heat generation of the fuel.
APPLICABLE SAFETY ANALYSIS	The confinement of radioactivity (including fission product gases, fuel fines, volatiles, and crud) during the storage of design basis spent fuel in the CANISTER is ensured by the multiple confinement boundaries and systems. The barriers relied on are: the fuel pellet matrix, the metallic fuel cladding tubes where the fuel pellets are contained, and the CANISTER where the fuel assemblies are stored. Long-term integrity of the fuel and cladding depends on limiting the fuel cladding temperatures, the total number of thermal cycles (for high burnup fuel only), and establishing and maintaining an inert atmosphere in the CANISTER. This is accomplished by removing water from the CANISTER and backfilling the cavity with helium. The thermal analysis assumes that the CANISTER cavity is dried and filled with helium.

(continued)

APPLICABLE SAFETY ANALYSIS (continued)	The heat-up and thermal cycling of the CANISTER and contents will occur during CANISTER vacuum drying, but is controlled by LCO 3.1.1. Dryness of the CANISTER (e.g., no free water) is verified by holding a vacuum pressure below or equal to a selected pressure for a specified period of time. The vacuum pressure selected for this verification is related to the temperature of the environment the CANISTER is in while vacuum drying (i.e., either the spent fuel pool (SFP) water temperature for CANISTERS vacuum dried in the SFP, or the cask preparation area ambient air temperature for CANISTERS vacuum dried outside the SFP). The nominal vacuum pressure selected for the verification in the LCO is 10 mm of Hg, which corresponds to approximately one-half of the vapor pressure of water at 70°F. The temperature of the drying environment at facilities loading CANISTERS is expected to exceed this temperature under most circumstances. In the event that either SFP water temperature (for CANISTERS vacuum dried in the SFP) or the cask preparation area ambient air temperature (for CANISTERS vacuum dried outside the SFP) is below 65°F, a lower vacuum pressure of 5 mm of Hg shall be used as the test criterion. For either verification, a 10-minute hold period has been selected. Holding the vacuum pressure below 10 mm of Hg for 10 minutes (or under 5 mm at SFP or ambient temperatures <65°F), with the CANISTER isolated from the vacuum pump and the pump turned off, demonstrates that there is no free water in the CANISTER, since the presence of any significant free water would result in the vacuum pressure increasing in a short period of time to the vapor pressure corresponding to the average temperature of the CANISTER and contents, which is significantly greater than the selected vacuum pressure.
LCO	A vacuum pressure of ≤10 mm of mercury, as specified in this LCO, indicates that liquid water has evaporated and been removed from the CANISTER cavity. Removing water from the CANISTER cavity helps to ensure the long-term maintenance of fuel cladding integrity.
APPLICABILITY	Cavity vacuum drying is performed during LOADING OPERATIONS before the TRANSFER CASK holding the CANISTER is moved to transfer the CANISTER into the CONCRETE CASK. Therefore, the vacuum requirements do not apply after the CANISTER is backfilled with helium and leak tested prior to TRANSPORT OPERATIONS and STORAGE OPERATIONS.
ACTIONS	A note has been added to the ACTIONS, which states that, for this LCO, separate Condition entry is allowed for each CANISTER. This is acceptable, since the Required Actions for each Condition provide appropriate compensatory measures for each CANISTER not meeting the LCO. Subsequent CANISTERs that do not meet the LCO are governed by subsequent Condition entry and application of associated Required Actions.

(continued)

ACTIONS (continued)

A.1

If the CANISTER cavity vacuum drying pressure limit cannot be met, actions must be taken to meet the LCO. Failure to successfully complete cavity vacuum drying could have many causes, such as failure of the vacuum drying system, inadequate draining, ice clogging of the drain lines, or leaking CANISTER welds. The Completion Time is sufficient to determine and correct most failure mechanisms. Excessive heat-up and thermal cycling of the CANISTER and contents is precluded by LCO 3.1.1.

B.1

If the CANISTER fuel cavity cannot be successfully vacuum dried, the fuel must be placed in a safe condition. Corrective actions may be taken after the fuel is placed in a safe condition to perform the A.1 action provided that the initial conditions for performing A.1 are met.

A.1 may be repeated as necessary prior to performing B.1. The time frame for completing B.1 can not be extended by reperforming A.1. The Completion Time is reasonable, based on the time required to reflood the CANISTER, perform fuel cooldown operations, cut the shield lid weld, move the TRANSFER CASK into the spent fuel pool, and remove the CANISTER shield lid in an orderly manner and without challenging personnel.

SURVEILLANCE REQUIREMENTS

SR 3.1.2.1

The long-term integrity of the stored fuel is dependent on storage in a dry, inert environment. Cavity dryness is demonstrated by evacuating the cavity to a very low absolute pressure and verifying that the pressure remains below a specified vapor pressure for a specific period of time. A low vacuum pressure is an indication that the cavity is dry. The surveillance must be performed prior to TRANSPORT OPERATIONS, as the vacuum drying pressure must be achieved before the CANISTER is sealed. This allows sufficient time to backfill the CANISTER cavity with helium, while minimizing the time the fuel is in the CANISTER without water or the assumed inert atmosphere in the cavity.

REFERENCES

1. FSAR Sections 4.4, 7.1 and 8.1.

C 3.1 NAC-UMS® SYSTEM Integrity

C 3.1.3 CANISTER Helium Backfill Pressure

BASES

BACKGROUND

A TRANSFER CASK with an empty CANISTER is placed into the spent fuel pool and loaded with fuel assemblies meeting the requirements of the Approved Contents limits. A shield lid is then placed on the CANISTER. The TRANSFER CASK and CANISTER are raised out of the spent fuel pool. The TRANSFER CASK and CANISTER are then moved to a preparation area, where dose rates are measured. The CANISTER shield lid is welded to the CANISTER shell, and the lid weld is examined and pressure tested. The water is drained from the CANISTER, and CANISTER cavity vacuum drying is performed and verified. The CANISTER cavity is then evacuated to ≤3 mm of mercury to remove any residual oxidizing gases and the cavity is backfilled with helium. The CANISTER drain and vent port covers are installed, welded and examined. The shield lid weld is then helium leak tested using the evacuated envelope method, per ANSI N14.5. The structural lid is installed, welded and examined. Dose and contamination measurements are completed prior to moving the TRANSFER CASK and CANISTER in position to transfer the CANISTER to the CONCRETE CASK. After the CANISTER is transferred, the CONCRETE CASK is then moved to the ISFSI. Average CONCRETE CASK dose rates are measured at the ISFSI pad.

Evacuating and backfilling of the CANISTER cavity with helium removes residual oxidizing gases to ≤1 mole, promotes heat transfer from the spent fuel to the CANISTER structure and protects the fuel cladding. Providing a helium pressure equal to atmospheric pressure ensures that there will be no in-leakage of air over the life of the CANISTER, which might be harmful to the heat transfer features of the NAC-UMS® SYSTEM and harmful to the fuel.

APPLICABLE SAFETY ANALYSIS

The confinement of radioactivity (including fission product gases, fuel fines, volatiles, and crud) during the storage of spent fuel in the CANISTER is ensured by the multiple confinement boundaries and systems. The barriers relied on are: the fuel pellet matrix, the metallic fuel cladding tubes where the fuel pellets are contained, and the CANISTER where the fuel assemblies are stored. Long-term integrity of the fuel and cladding depends on the ability of the NAC-UMS® SYSTEM to remove heat from the CANISTER and reject it to the

(continued)

APPLICABLE SAFETY ANALYSIS (continued)	environment. This is accomplished by removing water from the CANISTER cavity and backfilling the cavity with an inert gas. The heat-up of the CANISTER and contents will continue following backfilling with helium, but is controlled by LCO 3.1.4. The thermal analyses of the CANISTER assume that the CANISTER cavity is dried and filled with dry helium.
LCO	Backfilling the CANISTER cavity with helium at a pressure equal to atmospheric pressure ensures that there is no air in-leakage into the CANISTER, which could decrease the heat transfer properties and result in increased cladding temperatures and damage to the fuel cladding over the storage period. The helium backfill pressure of 0 psig specified in this LCO was selected based on a minimum helium purity of 99.9% to ensure that the CANISTER internal pressure and heat transfer from the CANISTER to the environment are maintained consistent with the design and analysis basis of the CANISTER.
APPLICABILITY	Helium backfill is performed during LOADING OPERATIONS, before the TRANSFER CASK and CANISTER are moved to the CONCRETE CASK for transfer of the CANISTER. Therefore, the backfill pressure requirements do not apply after the CANISTER is backfilled with helium and leak tested prior to TRANSPORT OPERATIONS and STORAGE OPERATIONS.
ACTIONS	A note has been added to the ACTIONS, which states that, for this LCO, separate Condition entry is allowed for each CANISTER. This is acceptable, since the Required Actions for each Condition provide appropriate compensatory measures for each CANISTER not meeting the LCO. Subsequent CANISTERs that do not meet the LCO are governed by subsequent condition entry and application of associated Required Actions. <u>A.1</u> If the backfill pressure cannot be established within limits, actions must be taken to meet the LCO. The Completion Time is sufficient to determine and correct most failures, which would prevent backfilling of the CANISTER cavity with helium. These actions include identification and repair of helium leak paths or replacement of the helium backfill equipment. In addition, the CANISTER can be maintained in a safe condition based on the use of forced air cooling or water cooling.

(continued)

ACTIONS (continued) B.1

If the CANISTER cavity cannot be backfilled with helium to the specified pressure, the fuel must be placed in a safe condition. Corrective actions may be taken after the fuel is placed in a safe condition to perform the A.1 action provided that the initial conditions for performing A.1 are met. A.1 may be repeated as necessary prior to performing B.1. The time frame for completing B.1 cannot be extended by reperforming A.1. The Completion Time is reasonable based on the time required to re-flood the CANISTER, perform cooldown operations, cut the CANISTER shield lid weld, move the TRANSFER CASK and CANISTER into the spent fuel pool, remove the CANISTER shield lid, and remove the spent fuel assemblies in an orderly manner and without challenging personnel.

SURVEILLANCE REQUIREMENTS

SR 3.1.3.1

The long-term integrity of the stored fuel is dependent on storage in a dry, inert atmosphere and maintenance of adequate heat transfer mechanisms. Filling the CANISTER cavity with helium at a pressure within the range specified in this LCO will ensure that there will be no air in-leakage, which could potentially damage the fuel. This pressure of helium gas is sufficient to maintain fuel cladding temperatures within acceptable levels.

Backfilling of the CANISTER cavity must be performed successfully on each CANISTER before placing it in storage. The surveillance must verify that the CANISTER helium backfill pressure is within the limit specified prior to installation of the structural lid.

REFERENCES

1. FSAR Sections 4.4, 7.1 and 8.1.

C 3.1 NAC-UMS® SYSTEM Integrity

C 3.1.4 CANISTER Maximum Time in the TRANSFER CASK

BASES

BACKGROUND

A TRANSFER CASK with an empty CANISTER is placed into the spent fuel pool and loaded with fuel assemblies meeting the requirements of the Approved Contents limits. A shield lid is then placed on the CANISTER. The TRANSFER CASK and CANISTER are raised out of the spent fuel pool. The TRANSFER CASK and CANISTER are then moved to a preparation area, where dose rates are measured. The CANISTER shield lid is welded to the CANISTER shell, and the lid weld is examined and pressure tested. The water is drained from the CANISTER, and CANISTER cavity vacuum drying is performed. The CANISTER cavity is then backfilled with helium, and the CANISTER drain and vent port covers are installed, welded and examined. The shield lid weld is then helium leak tested using the evacuated envelope method, per ANSI N14.5. The structural lid is installed, welded and examined. Dose and contamination measurements are completed prior to moving the TRANSFER CASK and CANISTER in position to transfer the CANISTER to the CONCRETE CASK. After the CANISTER is transferred, the CONCRETE CASK is then moved to the ISFSI. Average CONCRETE CASK dose rates are measured at the ISFSI pad.

Backfilling the CANISTER cavity with helium promotes heat transfer from the fuel and the inert atmosphere protects the fuel cladding. The cumulative time a loaded, helium backfilled CANISTER may remain in the TRANSFER CASK is limited to 600 hours. This limit ensures that the test duration of 30 days (720 hours) considered in PNL-4835 for zirconium alloy clad fuel for storage in air is not exceeded and ensures that the TRANSFER CASK is used as intended. The time limit is established to preclude long-term storage of a loaded CANISTER in the TRANSFER CASK.

Intermediate time limits are established for CANISTERS with heat loads above 20 kW (PWR) or 17 kW (BWR) if they are not in either forced air cooling or in-pool cooling. These intermediate limits assure that the short-term temperature limits established in the Safety Analysis Report for the spent fuel cladding and CANISTER materials are not exceeded. Placing the CANISTER in either forced air cooling or in-pool cooling for a minimum of 24 hours maintains temperatures within the short-term limits. For heat loads less than or equal to 20kW (PWR) or 17kW (BWR), neither forced air cooling nor in-pool cooling is required.

(continued)

APPLICABLE SAFETY ANALYSIS

Analyses reported in the Safety Analysis Report conclude that for heat loads greater than 20 kW (PWR) or greater than 17 kW (BWR), spent fuel cladding and CANISTER material short-term temperature limits will not be exceeded for the total elapsed times specified in LCO 3.1.4. As shown in the LCO, for total heat loads not specified, the time limit for the next higher specified heat load is conservatively applied. The thermal analysis shows that the fuel cladding and CANISTER component temperatures are below their allowable temperatures for the time durations specified, with the CANISTER in the TRANSFER CASK and backfilled with helium, after completion of 24 hours of in-pool cooling or forced air cooling. For lower heat loads, the steady state fuel cladding and component temperatures are below the allowable temperatures.

The basis for forced air cooling is an inlet maximum air temperature of 76°F which is the maximum normal ambient air temperature in the thermal analysis. The specified 375 CFM air flow rate exceeds the CONCRETE CASK natural convective cooling flow rate by a minimum of 10 percent. This comparative analysis conservatively excludes the higher flow velocity resulting from the smaller annulus between the TRANSFER CASK and CANISTER, which would result in improved heat transfer from the CANISTER.

From calculated temperatures reported in the Safety Analysis Report, it can be concluded that spent fuel cladding and CANISTER material short-term temperature limits will not be exceeded for a total elapsed time of greater than 20 hours for PWR fuel or 30 hours for BWR fuel for high heat loads, if the loaded CANISTER backfilled with helium is in the TRANSFER CASK. A 2 hour completion time is provided to establish in-pool or forced airflow cooling to ensure cooling of the CANISTER.

For heat loads of 20 kW or less (PWR), or 17 kW or less (BWR), and with the CANISTER backfilled with helium, the analysis shows that the fuel cladding and CANISTER components reach a steady-state temperature below the short-term allowable temperatures. Therefore, the time in the TRANSFER CASK is limited to 600 hours. For heat loads greater than 20 kW (PWR) or greater than 17 kW (BWR), and if the intermediate time is exceeded, the analysis shows that if in-pool cooling or forced air cooling at 375 CFM with air at 76°F is used, the temperatures of the fuel cladding and CANISTER components will not exceed short-term temperature limits.

(continued)

APPLICABLE SAFETY ANALYSIS (continued)	This limit ensures that the test duration of 30 days (720 hours) considered in PNL-4835 for zirconium alloy clad fuel for storage in air is not exceeded and ensures that the TRANSFER CASK is used as intended. Since the 600 hours is significantly less than the 720 hours considered in PNL-4835, operation in the TRANSFER CASK to this period is acceptable. Since the cooling provided by the forced air is equivalent to the passive cooling provided by the CONCRETE CASK and TRANSPORT CASK, relocation of a loaded and helium-filled CANISTER to a CONCRETE CASK or TRANSPORT CASK ensures that the fuel cladding and CANISTER component short-term temperature limits are not exceeded.
LCO	For PWR heat loads less than or equal to 20 kW, and BWR heat loads less than or equal to 17 kW, the thermal analysis shows that the presence of helium in the CANISTER is sufficient to maintain the fuel cladding and CANISTER component temperatures below the short-term temperature limits. Therefore, forced air cooling or in-pool cooling is not required for these heat load conditions. For higher heat loads of these fuels, as shown in the LCO, once forced air cooling or in-pool cooling is established, the amount of time the CANISTER resides in the TRANSFER CASK is not limited by the intermediate time limits, since the cooling provided by the forced air or water is equivalent to the passive cooling that is provided by the CONCRETE CASK or TRANSPORT CASK. If forced air flow or in-pool cooling is continuously maintained for a period of 24 hours, or longer, then the temperatures of the spent fuel cladding and CANISTER components are at, or below, the values calculated for the CONCRETE CASK normal conditions. Therefore, forced air cooling or in-pool cooling may be ended, allowing a new entry into Condition A of this LCO. This provides a new period in which continuation of LOADING OPERATIONS, TRANSFER OPERATIONS or UNLOADING OPERATIONS for high heat load PWR and BWR fuel may occur. Similarly, in LOADING OPERATIONS, TRANSFER OPERATIONS or UNLOADING OPERATIONS for heat loads up to the design basis, continuous forced air cooling or in-pool cooling maintains the fuel cladding and CANISTER component temperatures below the short-term temperature limits. Therefore, the CANISTER may remain in the TRANSFER CASK for up to 600 hours, where the time limit is based on the test duration of 30 days (720 hours) considered in PNL-4835 for zirconium alloy clad fuel for storage in air rather than on temperature limits.

(continued)

CANISTER Maximum Time in the TRANSFER CASK
C 3.1.4

APPLICABILITY	For LOADING OPERATIONS, the elapsed time restrictions on the loaded CANISTER apply from the completion point of the CANISTER helium backfilling through completion of the transfer from the TRANSFER CASK to the CONCRETE CASK and installing the CONCRETE CASK shield plug and cask lid. For TRANSFER OPERATIONS, the elapsed time restrictions on the loaded CANISTER apply from the completion point of the closing of the TRANSFER CASK shield doors through completion of the unloading of the CANISTER from the TRANSFER CASK. For UNLOADING OPERATIONS, the elapsed time restrictions on the loaded CANISTER apply from the completion point of the closing of the TRANSFER CASK shield doors through initiation of CANISTER cooldown.
ACTIONS	A note has been added to the ACTIONS, which states that, for this LCO, separate Condition entry is allowed for each NAC-UMS® SYSTEM. This is acceptable, since the Required Actions for each Condition provide appropriate compensatory measures for each NAC-UMS® SYSTEM not meeting the LCO. Subsequent NAC-UMS® SYSTEMS that do not meet the LCO are governed by subsequent Condition entry and application of associated Required Actions. A note has been added to Condition A that reminds users that all time spent in Condition A is included in the 600-hour cumulative limit. If LCO 3.1.4 intermediate time is exceeded: <u>A.1.1</u> The TRANSFER CASK containing the loaded CANISTER shall be placed in the spent fuel pool. For in-pool cooling operations with the TRANSFER CASK and loaded CANISTER submerged, the annulus fill system is not required to be operating. If only the loaded CANISTER is submerged for in-pool cooling, the annulus fill system is required to be operating. <u>AND</u> <u>A.1.2</u> The TRANSFER CASK and a loaded CANISTER shall be maintained in the spent fuel pool having a maximum water temperature of 100°F for a minimum of 24 hours prior to restart of LOADING OPERATIONS, TRANSFER OPERATIONS or UNLOADING OPERATIONS.

(continued)

ACTIONS (continued)	OR A.2.1 A cooling air flow of 375 CFM at a maximum temperature of 76° F shall be initiated. The airflow will be routed to the annulus fill/drain lines in the TRANSFER CASK and will flow through the annulus and cool the CANISTER. AND A.2.2 The cooling air flow shall be maintained for a minimum of 24 hours prior to restart of LOADING OPERATIONS, TRANSFER OPERATIONS or UNLOADING OPERATIONS. If the LCO 3.1.4. 600-hour cumulative time limit is exceeded: B.1 The CANISTER shall be placed in a CONCRETE CASK. OR B.2 The CANISTER shall be placed in a TRANSPORT CASK. OR B.3 The CANISTER shall be unloaded. The 5-day Completion Time for Required Actions B.1, B.2, and B.3 assures that the PNL-4835 30-day test duration used to establish the LCO limit will not be exceeded, taking into account the 600 hours allowed by the LCO.
SURVEILLANCE REQUIREMENTS	SR 3.1.4.1 The elapsed time from entry into the LCO conditions of Applicability until placement of the CANISTER in a CONCRETE CASK or TRANSPORT CASK, or until CANISTER cooldown is initiated for UNLOADING OPERATIONS shall be monitored. This SR ensures that the fuel cladding and CANISTER component temperature limits are not exceeded.
REFERENCES	1. FSAR Sections 4.4, 8.1 and 8.2.

C 3.1 NAC-UMS® SYSTEM Integrity

C 3.1.5 CANISTER Helium Leak Rate

BASES

BACKGROUND	A TRANSFER CASK with an empty CANISTER is placed into the spent fuel pool and loaded with fuel assemblies meeting the requirements of the Approved Contents limits. A shield lid is then placed on the CANISTER. The TRANSFER CASK and CANISTER are raised out of the spent fuel pool. The TRANSFER CASK and CANISTER are then moved to a preparation area, where dose rates are measured. The CANISTER shield lid is welded to the CANISTER shell, and the lid weld is examined and pressure tested. The water is drained from the CANISTER, and CANISTER cavity vacuum drying is performed. The CANISTER cavity is then backfilled with helium, and the CANISTER drain and vent port covers are installed, welded and examined. The shield lid weld is then helium leak tested using the evacuated envelope method, per ANSI N14.5. The structural lid is installed, welded and examined. Dose and contamination measurements are completed prior to moving the TRANSFER CASK and CANISTER in position to transfer the CANISTER to the CONCRETE CASK. After the CANISTER is transferred, the CONCRETE CASK is then moved to the ISFSI. Average CONCRETE CASK dose rates are measured at the ISFSI pad. Backfilling the CANISTER cavity with helium promotes heat transfer from the fuel to the CANISTER shell. The inert atmosphere protects the fuel cladding. Prior to transferring the CANISTER to the CONCRETE CASK, the CANISTER helium leak rate is verified to ensure that the fuel and helium backfill gas is confined and that there will be no credible leakage from the CANISITER.
APPLICABLE SAFETY ANALYSIS	The confinement of radioactivity (including fission product gases, fuel fines, volatiles, and crud) during the storage of spent fuel in the CANISTER is ensured by the multiple confinement boundaries and systems. The barriers relied on are: the fuel pellet matrix, the metallic fuel cladding tubes where the fuel pellets are contained, and the CANISTER where the fuel assemblies are stored. Long-term integrity of the fuel and cladding depends on maintaining an inert atmosphere, and maintaining the cladding temperatures below established long-term limits. This is accomplished by removing water from the CANISTER and backfilling the cavity with helium. The heat-up of the CANISTER and contents will continue following backfilling the cavity and leak testing the shield lid-to-shell weld, but is controlled by LCO 3.1.4.

(continued)

LCO	Verifying that the CANISTER cavity helium leak rate is below the value specified in this LCO ensures that the CANISTER shield lid is sealed. Verifying the helium leak rate will also ensure that there will be no credible leakage from the CANISTER under off-normal or accident conditions.
APPLICABILITY	The helium leak rate verification is performed during LOADING OPERATIONS before the TRANSFER CASK and integral CANISTER are moved for transfer operations to the CONCRETE CASK. TRANSPORT OPERATIONS would not commence if the CANISTER helium leak rate was not below the test sensitivity. Therefore, CANISTER leak rate testing is not required during TRANSPORT OPERATIONS or STORAGE OPERATIONS.
ACTIONS	A note has been added to the ACTIONS, which states that, for this LCO, separate Condition entry is allowed for each CANISTER. This is acceptable, since the Required Actions for each Condition provide appropriate compensatory measures for each CANISTER not meeting the LCO. Subsequent CANISTERs that do not meet the LCO are governed by subsequent Condition entry and application of associated Required Actions. <u>A.1</u> If the helium leak rate limit is not met, actions must be taken to meet the LCO. The Completion Time is sufficient to determine and correct most failures, which could cause a helium leak rate in excess of the limit. Actions to correct a failure to meet the helium leak rate limit would include, in ascending order of performance: 1) verification of helium leak test system performance; 2) inspection of weld surfaces to locate helium leakage paths using a helium sniffer probe; and 3) weld repairs, as required, to eliminate the helium leakage. Following corrective actions, the helium leak rate verification shall be reperformed.

(continued)

ACTIONS (continued) B.1

If the CANISTER leak rate cannot be brought within the limit, the fuel must be placed in a safe condition. Corrective actions may be taken after the fuel is placed in a safe condition to perform the A.1 action provided that the initial conditions for performing A.1 are met. A.1 may be repeated as necessary prior to performing B.1. The time frame for completing B.1 cannot be extended by reperforming A.1. The Completion Time is reasonable based on the time required to reflood the CANISTER, perform fuel cooldown operations, cut the CANISTER shield lid weld, move the TRANSFER CASK into the spent fuel pool, remove the CANISTER shield lid, and remove the spent fuel assemblies in an orderly manner and without challenging personnel.

SURVEILLANCE REQUIREMENTS

SR 3.1.5.1

The primary design considerations of the CANISTER are that there will be no credible leakage and that the helium remains in the CANISTER during long-term storage. Long-term integrity of the stored fuel is dependent on storage in a dry, inert environment.

The helium leakage rate of each CANISTER shall be confirmed to meet the LCO prior to TRANSPORT OPERATIONS. The Surveillance Frequency allows sufficient time to backfill the CANISTER cavity with helium and to perform the leak test, while minimizing the time the fuel is in the CANISTER and loaded in the TRANSFER CASK.

REFERENCES

1. FSAR Sections 7.1 and 8.1.

C 3.1 NAC-UMS® SYSTEM Integrity

C 3.1.6 CONCRETE CASK Heat Removal System

BASES

BACKGROUND	The CONCRETE CASK Heat Removal System is a passive, air-cooled convective heat transfer system, which ensures that heat from the CANISTER is transferred to the environment by the upward flow of air through the CONCRETE CASK. Relatively cool air is drawn into the annulus between the CONCRETE CASK and the CANISTER through the four air inlets at the bottom of the CONCRETE CASK. The CANISTER transfers its heat from the CANISTER surface to the air via natural convection. The buoyancy created by the heating of the air creates a chimney effect and the air flows back into the environment through the four air outlets at the top of the CONCRETE CASK.
APPLICABLE SAFETY ANALYSIS	The thermal analyses of the CONCRETE CASK take credit for the decay heat from the spent fuel assemblies being ultimately transferred to the ambient environment surrounding the CONCRETE CASK. Transfer of heat away from the fuel assemblies ensures that the fuel cladding and CANISTER component temperatures do not exceed applicable limits. Under normal storage conditions, the four air inlets and four air outlets are unobstructed and full air flow (i.e., maximum heat transfer for the given ambient temperature) occurs. Analyses have been performed for the complete obstruction of all of the air inlets and outlets. The complete blockage of all air inlets and outlets stops air cooling of the CANISTER. The CANISTER will continue to radiate heat to the relatively cooler inner shell of the CONCRETE CASK. With the loss of air cooling, the CANISTER component temperatures will increase toward their respective short-term temperature limits. The limiting components are the CANISTER basket support and heat transfer disks, which, by analysis, approach their temperature limits in 24 hours, if no action is taken to restore air flow to the heat removal system. The maximum fuel clad temperatures remain below allowable accident limits for approximately six days (150 hours) with complete air flow blockage.
LCO	The CONCRETE CASK Heat Removal System must be verified to be OPERABLE to preserve the assumptions of the thermal analyses.

(continued)

LCO (continued)	Operability of the heat removal system ensures that the decay heat generated by the stored fuel assemblies is transferred to the environment at a sufficient rate to maintain fuel cladding and CANISTER component temperatures within design limits.
APPLICABILITY	The LCO is applicable during STORAGE OPERATIONS. Once a CONCRETE CASK containing a CANISTER loaded with spent fuel has been placed in storage, the heat removal system must be OPERABLE to ensure adequate heat transfer of the decay heat away from the fuel assemblies.
ACTIONS	A note has been added to ACTIONS that states for this LCO, separate Condition entry is allowed for each CONCRETE CASK. This is acceptable since the Required Actions for each Condition provide appropriate compensatory measures for each CONCRETE CASK not meeting the LCO. Subsequent CONCRETE CASKs that do not meet the LCO are governed by subsequent Condition entry and application of associated Required Actions. <u>A.1</u> If the CONCRETE CASK heat removal system has been determined to not be OPERABLE, it must be restored to an analyzed safe status immediately, with adequate heat removal capability. Immediately, defined as the required action to be pursued without delay and in a controlled manner, provides a reasonable period of time (typically, one operating shift) to take action to remove the obstructions in the air flow path. In order to meet A.1, adequate heat removal capability must be verified to exist, either by visual observation of at least two unobstructed air inlet and outlet screens or by physically clearing any blockage from two air inlet and outlet screens, to prevent exceeding the short-term temperature limits. Thermal analysis of a fully blocked CONCRETE CASK shows that without adequate heat removal, the fuel cladding accident temperature limit could be exceeded over time. As a result, requiring immediate verification of adequate heat removal capability will ensure that the CONCRETE CASK and CANISTER components and the fuel cladding do not exceed their short-term temperature limits. The thermal analysis also shows that complete blockage of two air inlet and outlet screens results in no potential for exceeding accident fuel cladding, CONCRETE CASK or CANISTER component temperature limits. As a result, verifying that there are at least two unobstructed air

(continued)

ACTIONS (continued)

inlet and outlet screens will ensure that the accident temperature limits are not exceeded during the time that the remainder of the air linlet and outlet screens are returned to OPERABLE status.

AND

A.2

In addition to Required Action A.1, the fuel loading per the Approved Contents condition of the CoC is verified.

The Completion Time for this Required Action of 7 days will ensure that the CANISTER remains in a safe, analyzed condition.

AND

A.3

In addition to Required Actions A.1 and A.2 that ensure the adequate heat removal capability and verify the fuel loading, restoring the CONCRETE CASK Heat Removal System to OPERABLE is not an immediate concern. Therefore, restoring it within 25 days is considered a reasonable period of time.

B.1

If the Required Actions A.1, A.2 or A.3 cannot be met, an engineering evaluation is performed to verify that the CONCRETE CASK heat removal system is OPERABLE.

The Completion Time for this Required Action of 5 days will ensure that the CANISTER remains in a safe, analyzed condition.

OR

B.2

Place the affected NAC-UMS SYSTEM in a safe condition.

The Completion Time for this Required Action is 5 days. Requiring B.2 action completion within 5 days will ensure that the NAC-UMS SYSTEM is maintained in a safe condition.

(continued)

SURVEILLANCE REQUIREMENTS	SR 3.1.6.1 The long-term integrity of the stored fuel is dependent on the ability of the CONCRETE CASK to reject heat from the CANISTER to the environment. Visual observation that all four air inlet and outlet screens are unobstructed and intact ensures that air flow past the CANISTER is occurring and heat transfer is taking place. Complete blockage of one or more air inlet or outlet screens renders the heat removal system inoperable and this LCO is not met. Partial blockage of one or more air inlet or outlet screens does not constitute inoperability of the heat removal system. However, corrective actions should be taken promptly to remove the obstruction and restore full flow through the affected air inlet and outlet screens. Alternatively, based on the analyses, if the air temperature rise is less than the limits stated in the SR, adequate air flow and, therefore, adequate heat transfer is occurring to provide assurance of long-term fuel cladding integrity. The reference ambient temperature used to perform this Surveillance shall be measured at the ISFSI facility. The Frequency of 24 hours is reasonable based on the time necessary for CONCRETE CASK and CANISTER components to heat up to unacceptable temperatures assuming design basis heat loads, and allowing for corrective actions to take place upon discovery of the blockage of the air inlet and outlet screens. SR 3.1.6.2 The initial confirmation of the OPERABILITY of the CONCRETE CASK is established based on air temperature measurements at the CONCRETE CASK outlets and the ISFSI ambient, and verification that the air temperature rise is less than the limits stated in the SR. Following the initial confirmation, the continued OPERABILITY of the CONCRETE CASK shall be confirmed by one of the verification methods specified in SR 3.1.6.1. The specified Frequency of once between 5 and 30 days after beginning STORAGE OPERATIONS is reasonable and ensures that the CONCRETE CASK has reached thermal equilibrium and, therefore, the outlet air temperature measurements will reflect expected temperatures under normal operations. Completion of the measurements within 30 days of placement of the CONCRETE CASK into STORAGE OPERATIONS ensures that corrective actions can be taken to establish the OPERABLE status of the CONCRETE CASK within a reasonable period of time.
REFERENCES	1. FSAR Chapter 4 and Chapter 11, Section 11.1.2 and Section 11.2.13.

C 3.2 NAC-UMS® SYSTEM Radiation Protection

C 3.2.1 CANISTER Surface Contamination

BASES

BACKGROUND	A TRANSFER CASK containing an empty CANISTER is immersed in the spent fuel pool in order to load the spent fuel assemblies. The external surfaces of the CANISTER are maintained clean by the application of clean water to the annulus of the TRANSFER CASK. However, there is potential for the surface of the CANISTER to become contaminated with the radioactive material in the spent fuel pool water. Contamination exceeding LCO limits is removed prior to moving the CONCRETE CASK containing the CANISTER to the ISFSI in order to minimize the radioactive contamination to personnel or the environment. This allows the ISFSI to be entered without additional radiological controls to prevent the spread of contamination and reduces personnel dose due to the spread of loose contamination or airborne contamination. This is consistent with ALARA practices.
APPLICABLE SAFETY ANALYSIS	The radiation protection measures implemented at the ISFSI are based on the assumption that the exterior surfaces of the CANISTER are not significantly contaminated. Failure to decontaminate the surfaces of the CANISTER to below the LCO limits could lead to higher-than-projected occupational dose and potential site contamination.
LCO	Removable surface contamination on the exterior surfaces of the CANISTER is limited to 10,000 dpm/100 cm^2 from beta and gamma sources and 100 dpm/100 cm^2 from alpha sources. Only loose contamination is controlled, as fixed contamination will not result from the CANISTER loading process. Experience has shown that these limits are low enough to prevent the spread of contamination to clean areas and are significantly less than the levels that could cause significant personnel skin dose.

(continued)

LCO (continued)

LCO 3.2.1 requires removable contamination to be within the specified limits for the exterior surfaces of the CANISTER. Compliance with this LCO may be verified by direct and/or indirect methods. The location and number of CANISTER and TRANSFER CASK surface swipes used to determine compliance with this LCO are determined based on standard industry practice and the user's plant-specific contamination measurement program for objects of this size. The objective is to determine a removable contamination value representative of the entire CANISTER surface area, while implementing sound ALARA practices.

Swipes and measurements of removable surface contamination levels on the interior surfaces of the TRANSFER CASK may be performed to verify the CANISTER LCO limits following transfer of the CANISTER to the CONCRETE CASK. These measurements will provide indirect indications regarding the removable contamination on the exterior surfaces of the CANISTER.

APPLICABILITY

Verification that the exterior surface contamination of the CANISTER is less than the LCO limits is performed during LOADING OPERATIONS. This occurs before TRANSPORT OPERATIONS and STORAGE OPERATIONS. Measurement of the CANISTER surface contamination is unnecessary during UNLOADING OPERATIONS, as surface contamination would have been measured prior to moving the subject CANISTER to the ISFSI.

(continued)

ACTIONS	A note has been added to the ACTIONS, which states that, for this LCO, separate Condition entry is allowed for each CANISTER LOADING OPERATION. This is acceptable, since the Required Actions for each Condition provide appropriate compensatory measures for each CANISTER not meeting the LCO. Subsequent CANISTERs that do not meet the LCO are governed by subsequent Condition entry and application of associated Required Actions. A.1 If the removable surface contamination of the CANISTER that has been loaded with spent fuel is not within the LCO limits, action must be initiated to decontaminate the CANISTER and bring the removable surface contamination to within limits. The Completion Time of prior TRANSPORT OPERATIONS is appropriate, given that the time needed to complete the decontamination is indeterminate and surface contamination does not affect the safe storage of the spent fuel assemblies.
SURVEILLANCE REQUIREMENTS	SR 3.2.1.1 This SR verifies (either directly or indirectly) that the removable surface contamination on the exterior surfaces of the CANISTER is less than the limits in the LCO. The Surveillance is performed using smear surveys to detect removable surface contamination. The Frequency requires performing the verification prior to initiating TRANSPORT OPERATIONS in order to confirm that the CANISTER can be moved to the ISFSI without spreading loose contamination.
REFERENCES	1. FSAR Section 8.1. 2. NRC IE Circular 81-07.

C 3.2 NAC-UMS® SYSTEM Radiation Protection

C 3.2.2 CONCRETE CASK Average Surface Dose Rates

BASES

BACKGROUND	The regulations governing the operation of an ISFSI set limits on the control of occupational radiation exposure and radiation doses to the general public (Ref. 1). Occupational radiation exposure should be kept as low as reasonably achievable (ALARA) and within the limits of 10 CFR Part 20. Radiation doses to the public are limited for both normal and accident conditions in accordance with 10 CFR 72.
APPLICABLE SAFETY ANALYSIS	The CONCRETE CASK average surface dose rates are not an assumption in any accident analysis, but are used to ensure compliance with regulatory limits on occupational dose and dose to the public.
LCO	The limits on CONCRETE CASK average surface dose rates are based on the Safety Analysis Report shielding analysis of the NAC-UMS® SYSTEM (Ref. 2). The limits are selected to minimize radiation exposure to the public and to maintain occupational dose ALARA to personnel working in the vicinity of the NAC-UMS® SYSTEM. The LCO specifies sufficient locations for taking dose rate measurements to ensure the dose rates measured are indicative of the effectiveness of the shielding materials.
APPLICABILITY	The CONCRETE CASK average surface dose rates apply during STORAGE OPERATIONS. These limits ensure that the CONCRETE CASK average surface dose rates during STORAGE OPERATIONS are bounded by the shielding safety analyses. Radiation doses during STORAGE OPERATIONS are monitored by the NAC-UMS® SYSTEM user in accordance with the plant-specific radiation protection program as required by 10 CFR 72.212(b)(6) and 10 CFR 20 (Reference 1).
ACTIONS	A note has been added to the ACTIONS, which states that, for this LCO, separate Condition entry is allowed for each loaded CONCRETE CASK. This is acceptable, since the Required Actions for each Condition provide appropriate compensatory measures for each CONCRETE CASK not meeting the LCO. Subsequent NAC-UMS®

(continued)

ACTIONS (continued) SYSTEMs that do not meet the LCO are governed by subsequent Condition entry and application of associated Required Actions.

A.1

If the CONCRETE CASK average surface dose rates are not within limits, it could be an indication that a fuel assembly that did not meet the Approved Contents Limits in Section B2.0 of Appendix B was inadvertently loaded into the CANISTER. Administrative verification of the CANISTER fuel loading, by means such as review of video recordings and records of the loaded fuel assembly serial numbers, can establish whether a misloaded fuel assembly is the cause of the out-of-limit condition. The Completion time is based on the time required to perform such a verification.

A.2

If the CONCRETE CASK average surface dose rates are not within limits and it is determined that the CONCRETE CASK was loaded with the correct fuel assemblies, an analysis may be performed. This analysis will determine if the CONCRETE CASK would result in the ISFSI offsite or occupational calculated doses exceeding regulatory limits in 10 CFR Part 72 or 10 CFR Part 20, respectively. If it is determined that the measured average surface dose rates do not result in the regulatory limits being exceeded, STORAGE OPERATIONS may continue.

B.1

If it is verified that the fuel was misloaded, or that the ISFSI offsite radiation protection requirements of 10 CFR Part 20 or 10 CFR Part 72 will not be met with the CONCRETE CASK average surface dose rates above the LCO limit, the fuel assemblies must be placed in a safe condition in the spent fuel pool. The Completion Time is reasonable, based on the time required to transport the CONCRETE CASK, transfer the CANISTER to the TRANSFER CASK, remove the structural lid and vent and drain port cover welds, perform fuel cooldown operations, cut the shield lid weld, move the TRANSFER CASK and CANISTER into the spent fuel pool, remove the shield lid, and remove the spent fuel assemblies in an orderly manner and without challenging personnel.

(continued)

SURVEILLANCE REQUIREMENTS	SR 3.2.2.1 This SR ensures that the CONCRETE CASK average surface dose rates are within the LCO limits after transfer of the CANISTER into the CONCRETE CASK and prior to the beginning of STORAGE OPERATIONS. This Frequency is acceptable as corrective actions can be taken before off-site dose limits are compromised. The surface dose rates are measured approximately at the locations indicated on Figure A3-1 of Appendix A of the CoC Number 1015 Technical Specifications, following standard industry practices for determining average surface dose rates for large containers.

REFERENCES	1. 10 CFR Parts 20 and 72. 2. FSAR Sections 5.1 and 8.2.

C 3.3 NAC-UMS® SYSTEM Criticality Control

C 3.3.1 Dissolved Boron Concentration

BASES

BACKGROUND	A TRANSFER CASK with an empty CANISTER is placed into a PWR spent fuel pool and loaded with fuel assemblies meeting the requirements of the Approved Contents Limits shown in Table B2-2. A shield lid is then placed on the CANISTER. The TRANSFER CASK and CANISTER are raised out of the spent fuel pool. The TRANSFER CASK and CANISTER are then moved into the cask decontamination area, where dose rates are measured and the CANISTER shield lid is welded to the CANISTER shell and the lid weld is examined, pressure tested, and leak tested. The water is drained from the CANISTER, and CANISTER cavity vacuum drying is performed. The CANISTER cavity is then backfilled with helium. Additional dose rates are measured, and the CANISTER vent port and drain port covers and structural lid are installed and welded. Non-destructive examinations are performed on the welds. Contamination measurements are completed prior to moving the TRANSFER CASK and CANISTER in position to transfer the CANISTER to the CONCRETE CASK. After the CANISTER is transferred, the CONCRETE CASK is then moved to the ISFSI. Average CONCRETE CASK dose rates are measured at the ISFSI pad.
APPLICABLE SAFETY ANALYSIS	During loading into, or unloading from, the CANISTER, criticality control of certain PWR fuel requires that the water in the CANISTER contains dissolved boron in a concentration of 1,000 parts per million, or greater. As shown in Table B2-2, spent fuel with the enrichments shown in the "without (w/o) boron" column may be loaded with no assured level of boron in the water in the CANISTER. However, spent fuel with the enrichments shown in the "with boron" column must be loaded or unloaded from the CANISTER when the water in the CANISTER has a boron concentration of 1,000 parts per million or greater. Since boron concentration varies with water temperature, water temperature must be considered in measuring the boron concentration.

(continued)

LCO	The criticality analysis shows that PWR fuel with certain combinations of initial enrichment and fuel content requires credit for the presence of at least 1,000 parts per million of boron in solution in the water in the CANISTER (see Section B3.2.1 for the requirements for assuring soluble boron concentration during loading or unloading). This water must be used to flood the canister cavity during underwater PWR fuel loading or unloading. The boron in the pool water ensures sufficient thermal neutron absorption to preserve criticality control during fuel loading in the basket. Consequently, if boron credit is required for the fuel being loaded or unloaded, the canister must be flooded with water that contains boron in the proper concentration in accordance with the requirements of LCO 3.3.1. Concentration of boron must also be measured and maintained in accordance with LCO 3.3.1. The dissolved boron concentration requirement, and measurement requirement, applies to both the spent fuel pool water and to water in the CANISTER, when pool water is used to fill the CANISTER.
APPLICABILITY	Control of Boron concentration is required during LOADING or UNLOADING OPERATIONS when the CANISTER holds at least one spent fuel assembly that requires dissolved boron for criticality control as described in Table B2-2. This LCO does not apply to spent fuel having an enrichment within the limits specified in the table in the "without (w/o) boron" column.
ACTIONS	A note has been added to the ACTIONS, which states that, for this LCO, separate Condition entry is allowed for each CANISTER. This is acceptable, since the Required Actions for each Condition provide appropriate compensatory measures for each CANISTER not meeting the LCO. Subsequent CANISTERs that do not meet the LCO are governed by subsequent Condition entry and application of associated Required Actions. <u>A.1</u> If the required dissolved Boron concentration of the water in the CANISTER is not met, immediate actions must be taken to restore the required dissolved boron concentration. No actions, including continued loading, may be taken that increases system reactivity. <u>AND</u>

(continued)

A.2

The required concentration of dissolved Boron must be restored.

AND

A.3

If the required boron concentration in the water in the CANISTER cannot be established within 24 hours, remove all fuel assemblies that exceed the enrichment limits of Table B2-2 for fuel assemblies taking no boron credit from the CANISTER to bring the system to a safe configuration. The 24 hour period provides adequate time to restore the required boron concentration.

SURVEILLANCE REQUIREMENTS	SR 3.3.1.1 The assurance of an adequate concentration of dissolved boron in the water in the CANISTER must be established once within 4 hours of beginning any LOADING or UNLOADING OPERATION, using two independent measurements of determining boron concentration. During LOADING or UNLOADING OPERATIONS, verification of continued adequate dissolved boron concentration must be performed every 48 hours after the beginning of operations. The 48-hour boron concentration verification is not required when no water is being introduced into the CANISTER cavity. In this situation, no potential exists for the boron in the CANISTER to be diluted, so verification of the boron concentration is not necessary.
REFERENCES	Section B3.2.1 and Table B2-2.