US-APWR

7th Pre-Application Review Meeting

Electrical System Design

June 13, 2007
Mitsubishi Heavy Industries, LTD.

Meeting Attendees

✓ **Makoto Takashima**
(Responsible for Electrical System Design)
Deputy Chief Engineer
Water Reactor Engineering Department
Nuclear Energy Systems Engineering Center
Mitsubishi Heavy Industries, LTD.

✓ **Shinji Niida**
(Responsible for Electrical System Design)
Acting Manager
Electrical System Engineering Section
Nuclear Energy Systems Engineering Center
Mitsubishi Heavy Industries, LTD.

✓ **Ladislau (Larry) Hajos PE - Presenter -**
(Technical Advisor for Electrical Design)
Senior Technical Manager
Mitsubishi Nuclear Energy Systems, Inc.

Meeting Objectives

- Provide an overview of the Electrical Power Distribution System of the US-APWR
- Explain the features that make the design of the US-APWR a very safe and reliable Power Distribution System
- Explain the use of Class 1E Gas-Turbine Generators as Emergency Power Sources
- Obtain feedback from the NRC concerning the Electrical Power Distribution System of US-APWR

Presentation Summary

1. US-APWR safety electrical system design meets US Regulations
2. Main configuration:
   (a) Offsite Power System
   (b) Onsite AC Power System
   (c) Onsite DC and Instrumentation and Controls (I&C) Power System
3. Main design features:
   (a) Gas Turbine Generators as EPS
   (b) Countermeasures against SBO
4. Conclusion

1. US-APWR meets US Regulation

- The Electrical Power Distribution System for the US-APWR meets all US NRC Regulations and Industry Standards

2. Main Configuration

(a) Offsite Power System

(b) Onsite AC Power System

(c) Onsite DC and I&C Power System

2(a) Offsite Power System

➢ Codes and Regulatory Guides

- ✓ 10 CFR 50, Appendix A
  - ✓ GDC 1, 2, 4, 5, 17 and 18
- ✓ 10 CFR 50, Appendix S
- ✓ 10 CFR 50.34
- ✓ 10 CFR 50.63
- ✓ 10 CFR 52.47
- ✓ Regulatory Guides 1.32, 1.118, 1.155, 1.206
- ✓ NUREG 0800

2(a) Offsite Power System (cont'd)

➢ Design Features

- ✓ Two (2) sources of offsite power are provided:
  - a) Main Transformer through Unit Auxiliary Transformers (UAT)
  - b) Reserve Auxiliary Transformer (RAT)
- ✓ The two (2) offsite power supply circuits are independent and physically separated
- ✓ Both offsite power supply circuits have enough capacity to achieve their safety related function during a Design Basis Event (DBE) and meet the requirements of the applicable General Design Criteria (GDC)

2(a) Offsite Power System (cont'd)

➢ System Configuration

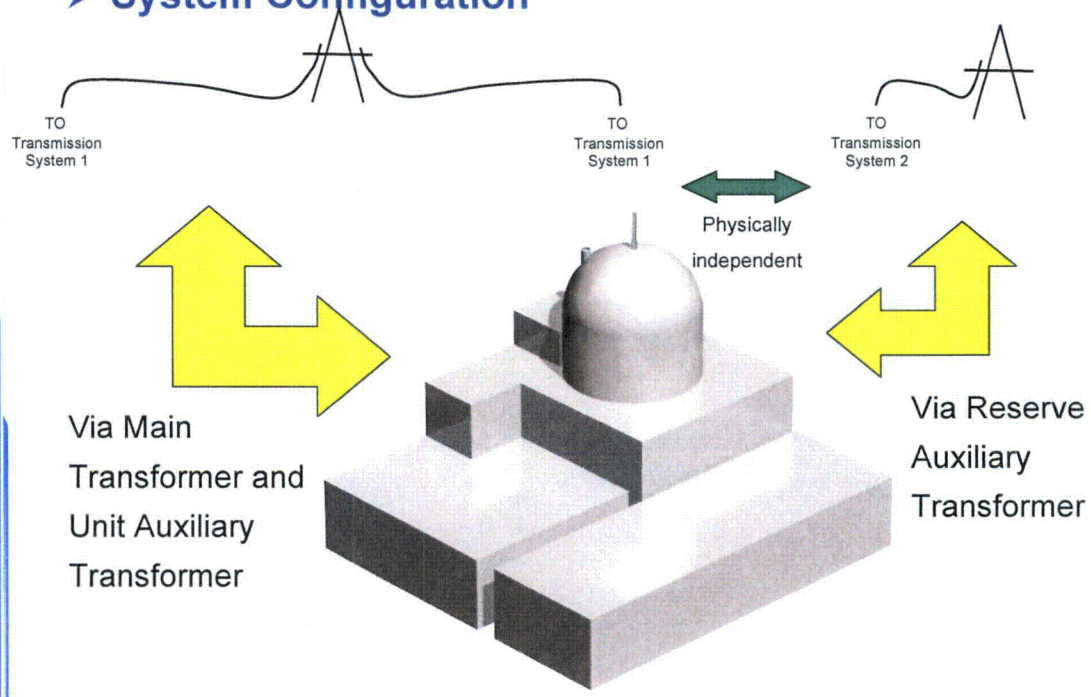

2(a) Offsite Power System (cont'd)

➢ Offsite Power Sources

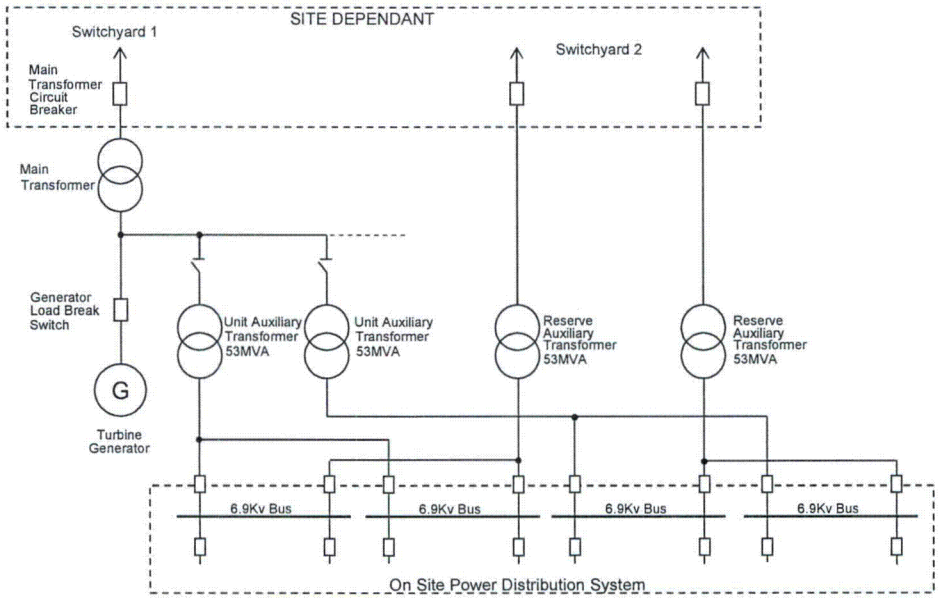

2(a) Offsite Power System (cont'd)

➢ Capability of Offsite Power

✓The configuration of the offsite power is site specific and the following items will be addressed for every particular situation:

- Grid voltage levels
- Stability analysis
- Load flows
- Degraded grid etc.

2(b) Onsite AC Power System

➢ Codes and Regulatory Guides

✓ 10 CFR Part 50, 50.49, 50.63

✓ 10 CFR Part 50, Appendix A and S

✓ GDC 1, 2, 3, 4, 5, 17, 18, and 50

✓ 10 CFR Part 52.47

✓ Regulatory Guides: 1.9, 1.63, 1.29, 1.32, 1.40, 1.41, 1.53, 1.75, 1.89, 1.93, 1.100, 1.106, 1.118, 1.131, 1.137, 1.155, 1.204, 1.206

2(b) Onsite AC Power System (cont'd)

➢System Configuration

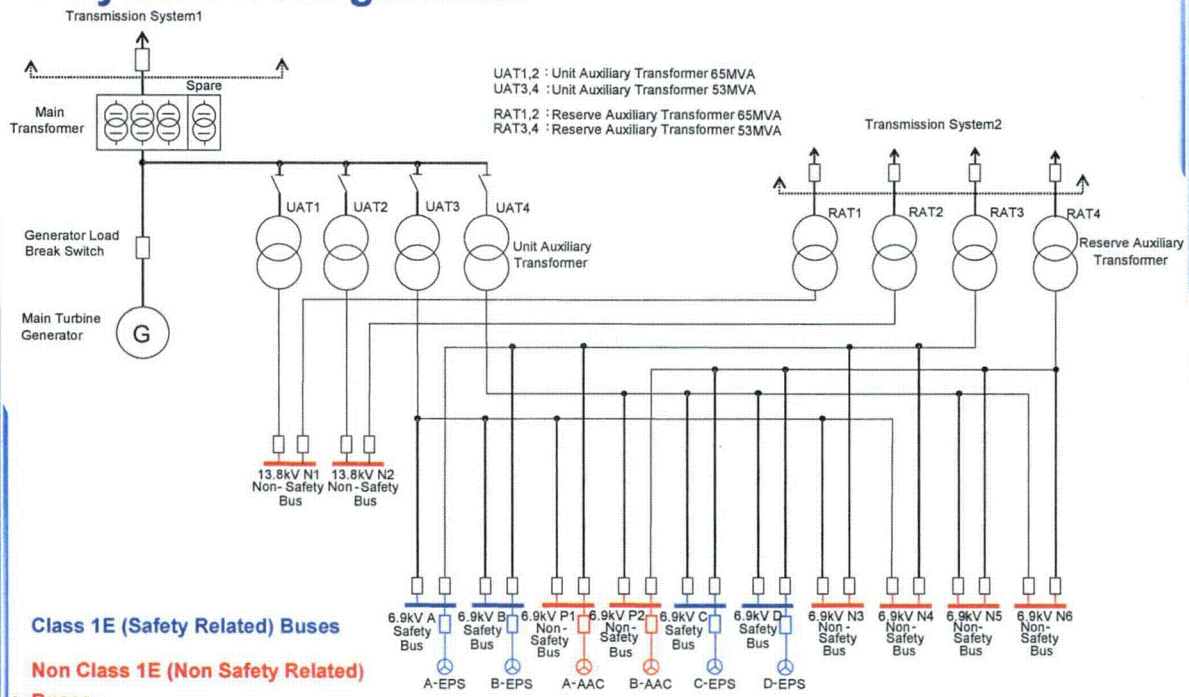

2(b) Onsite AC Power System (cont'd)

➢Design Features

- ✓Class 1E AC electrical power system consists of four (4) separate trains. Each train includes one Class 1E Emergency Power Source (EPS)
- ✓On-Line Maintenance of any EPS is allowed with Single-Failure Criterion remaining satisfied
- ✓"Permanent" buses supplied from Alternative AC Power Source (AAC) are provided
- ✓Non-safety related loads are not supplied from class 1E buses. Required non-safety related loads are supplied from AAC in LOOP condition

2(b) Onsite AC Power System (cont'd)

➢Operation

✓ Plant Normal Operation

The onsite power systems are energized from the Main Turbine Generator via the Unit Auxiliary Transformers (UAT)

✓ Main Turbine Generator is out of service (Startup/Shutdown etc.)

The Generator Load Break Switch (GLBS) is opened and the onsite power distribution systems are energized through the Main Transformer and Unit Auxiliary Transformers (UAT)

✓ Both Main Turbine Generator and Main Transformer are not available

The onsite power distribution system looses its main power source and it is automatically transferred to the Reserve Auxiliary Transformers (RAT)

✓ Loss of Offsite Power (LOOP)

Stand-by, Class 1E EPS units provide back up power for Class 1E buses

2(b) Onsite AC Power System (cont'd)

➢System Design

✓ The Onsite AC Power system consists of four (4) class 1E power divisions and eight (8) non-class 1E power divisions

✓ Each division consists of AC medium voltage buses (13.8kV and 6.9kV) and 480V AC low voltage systems (Load Centers, Motor Control Centers)

✓ Each class 1E 6.9kV bus connects to a class 1E EPS

✓ There are two non-class 1E alternate AC power sources (AAC) each connected to one 6.9kV AC "permanent" bus. When LOOP occurs, the AACs provide power to the respective "permanent" buses

2(b) Onsite AC Power System (cont'd)

➢Basic Concept of EPS

✓Four (4) independent EPS provide redundant standby power to the class 1E buses

✓The operation of any two (2) EPS is the minimum required to safely shut down the reactor upon the loss of offsite power (LOOP) simultaneous with a design basis event (DBE)

✓Each class 1E EPS includes supporting systems such as lubrication, control, starting etc. These supporting systems are also Class 1E safety related

2(b) Onsite AC Power System (cont'd)

➢ Feature of Four (4) Train Power System

✓ On-Line Maintenance (OLM) is allowed

For Example

✓ A-EPS is out of service for maintenance, and LOOP occurs
✓ Assume failure of D-EPS (single failure)
✓ Two divisions remain available to safely shut down the plant (B&C)

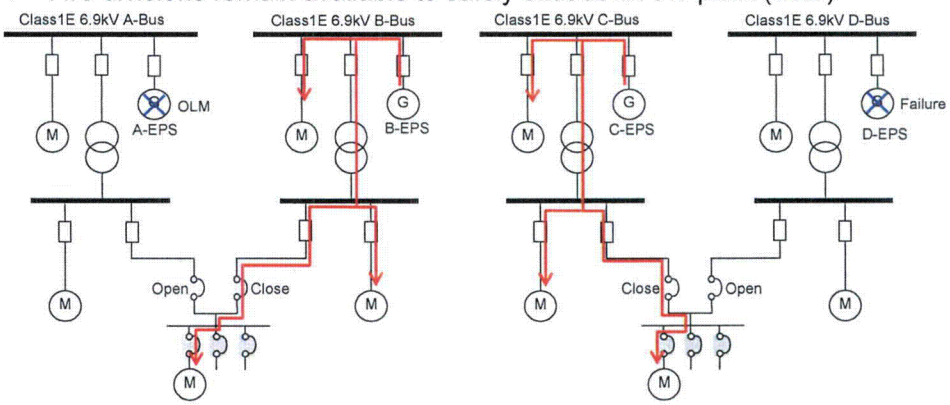

2(c) Onsite DC Power and I&C Power System

- **Codes and Regulatory Guides**
  - ✓ 10 CFR Part 50, 50.49
  - ✓ 10 CFR Part 50, Appendix A and S
    - ✓ GDC 1, 2, 3, 4, 5, 17, 18, and 50
  - ✓ Regulatory Guides: 1.63,1.9, 1.29, 1.32, 1.41, 1.53, 1.75, 1.89, 1.93, 1.100, 1.106, 1.118, 1.128, 1.129 1.131, 1.155, 1.204, 1.206

2(c) Onsite DC Power and I&C Power Systems (cont'd)

- **Design Features**
  - ✓ Four (4) train system with high reliability is used for Class 1E DC and I&C power systems
  - ✓ Class 1E DC and I&C power systems can supply the loads for two (2) hours, without any AC power input
  - ✓ Back-up charger is shared between the four (4) Class 1E DC systems. Back-up transformers are provided for each class 1E I&C power system

2(c) Onsite DC Power and I&C Power System (cont'd)

➢ System Design

✓**DC Power System**

System	Four (4) Class 1E systems, four (4) Non-Class 1E systems
Power	DC 125V
Battery supply duration	2 hours (Class 1E system) 1 hours (Non-Class 1E system)
Power Source Unit	Charger, Battery

✓**I&C Power System**

System	Four (4) Class 1E systems, five (5) Non-Class 1E systems
Power	Single phase AC 120V
Power Source Unit	Inverter Unit, UPS Unit, Transformer

2(c) Onsite DC Power and I&C Power System (cont'd)

➢System Configuration (Class 1E DC Power System)

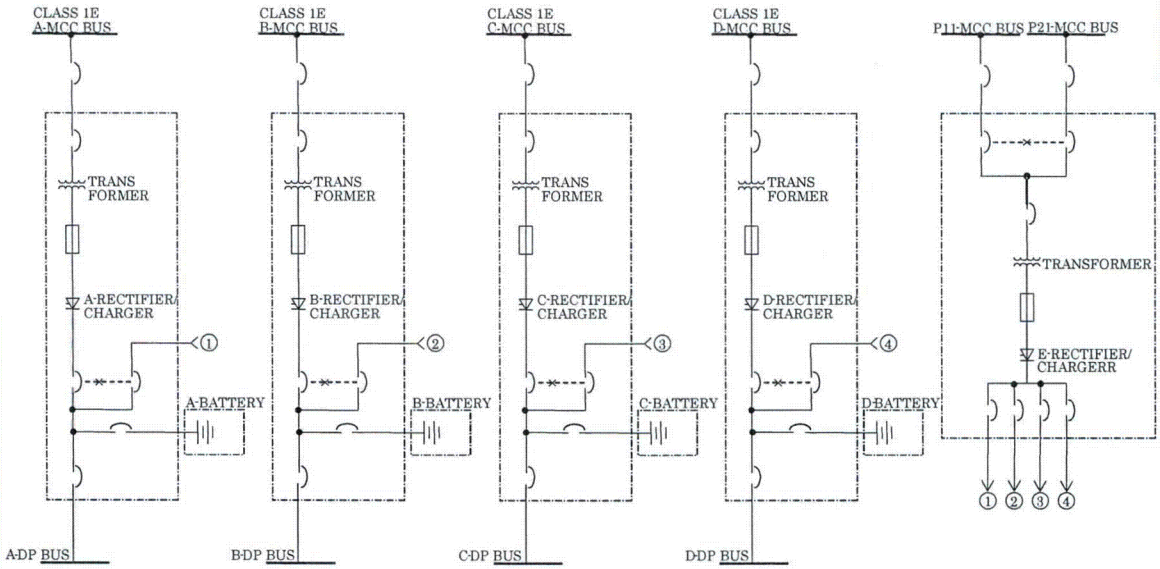

2(c) Onsite DC Power and I&C Power System (cont'd)

➢System Configuration

(Class 1E DC Power System : Extracted)

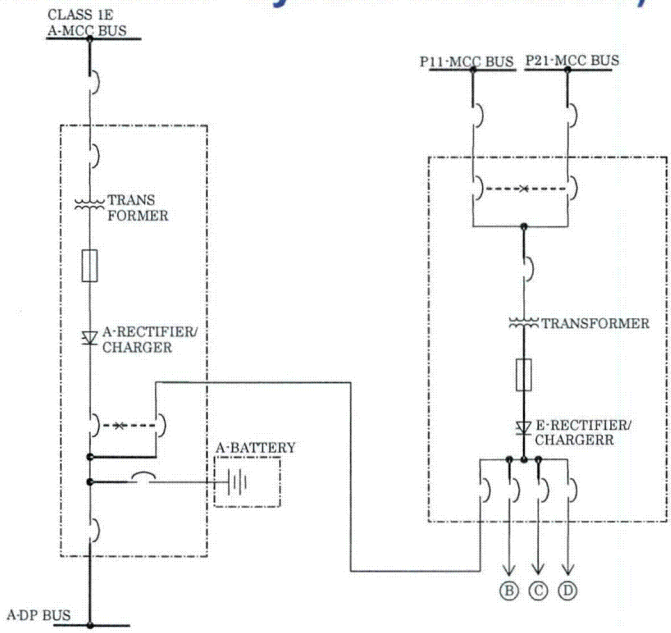

2(c) Onsite DC Power and I&C Power System (cont'd)

➢ System Configuration

(Class 1E I&C Power System)

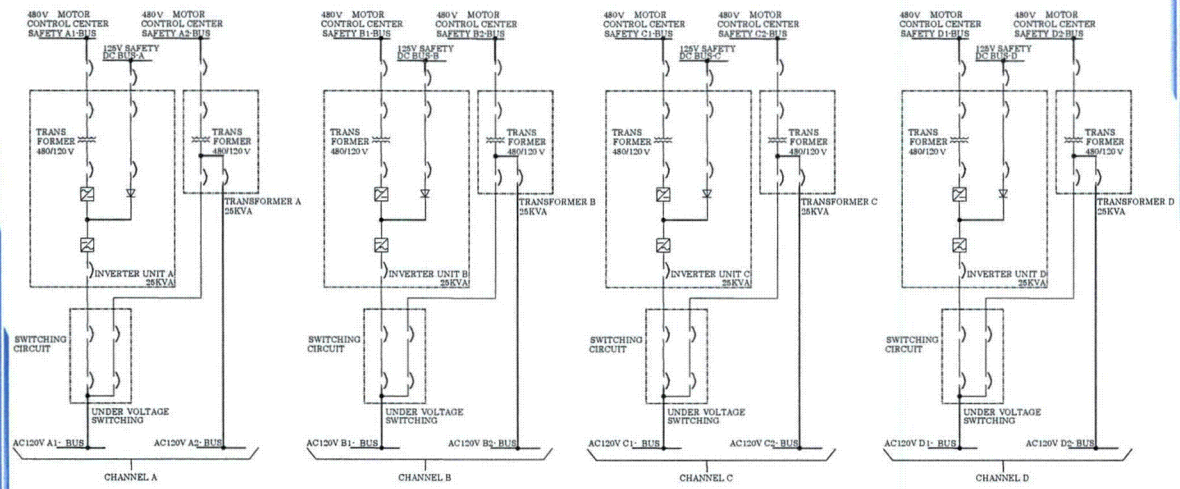

2(c) Onsite DC Power and I&C Power System (cont'd)

- System Configuration
  (Class 1E I&C Power System : Extracted)

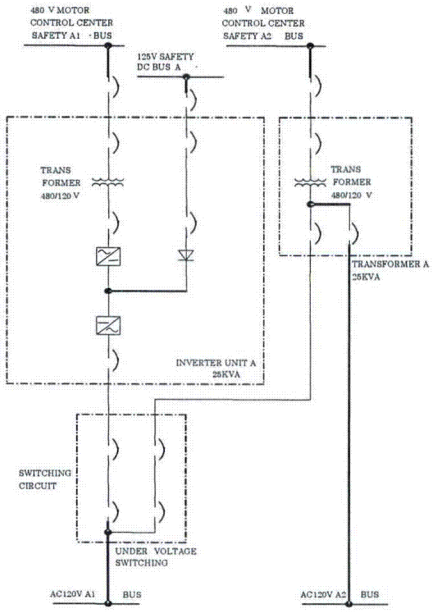

3. Main Design Features

(a) Gas Turbine Generator as EPS

(b) Countermeasures against SBO

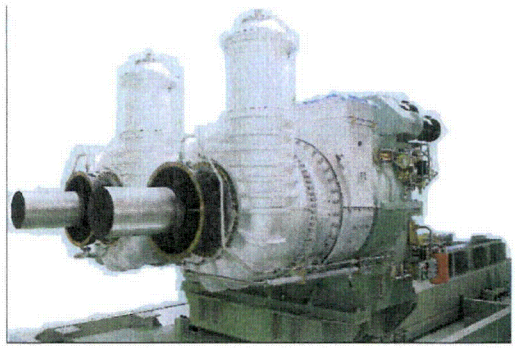

3(a) Gas Turbine Generator as EPS (Cont'd)

➢ The Gas Turbine Generator

Configuration

- ✓The Gas Turbine is a very simple rotating engine with few components
- ✓The Gas Turbine Generator System consists of the gas turbine, generator, a fuel transport system, a starting system and a control/instrumentation system
- ✓A water cooling system is not required

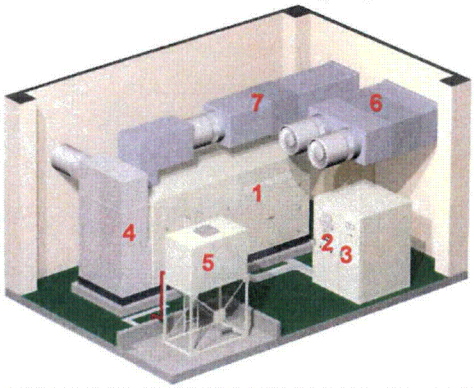

1. Generating facilities (Turbine, generator)
2. Control panel
3. Starter panel
4. Silencer
5. Fuel tank
6. Intake air system
7. Exhaust system

3(a) Gas Turbine Generator as EPS

➢ Why Mitsubishi selected Gas Turbine Generators for EPS

→ GT/G has significant merits

- ✓Longer start time of GT/G is accommodated by the Advanced Accumulator design of US-APWR

	Gas Turbine Generator	Diesel Generator
Space	Compact	Large
Cooling Water	Not Required	Required
Periodic Maintenance	**Overhaul is done once or twice during plant life**	Periodic Overhaul Required
Reliability	Higher than DG	10^{-2} (/d)
Starting Time	40 sec	10 sec

3(a) Gas Turbine Generator as EPS (cont'd)

➢ How Gas Turbine Generator meets the Safety Requirements

✓ Starting Time

Based on the safety analysis of the US-APWR with the Advanced Accumulator, the required starting time of EPS is 100sec

✓ Reliability

Reliability of the Gas Turbine Generator is higher than that of the Diesel Generator

- GT/G has about 1/3 the parts of a DG
- Probability of starting failure is less than 10^{-3} based on actual performance in Japan
- Detail evaluation will be provided in the Technical Report

3(a) Gas Turbine Generator as EPS (cont'd)

➢ Specification of Gas Turbine Generator used as EPS

	GT/G
Rated Output	4500kW
Speed (Engine)	18000RPM
Speed (Generator)	1800RPM
Starting Time	40 sec
Starting System	Air

3(a) Gas Turbine Generator as EPS (cont'd)

➢ Plan of Class 1E Qualification

→ *The GT/G will meet the same requirements as the Emergency Diesel Generator, complying with Regulatory Guide 1.9 and IEEE-387*

✓ *The Qualification procedure will use the Commercial Grade Item (CGI) dedication process, per EPRI NP 5652 endorsed by NRC GL 91-05. These guidelines will be applied to the procurement, acceptance, testing and dedication of the GT/G.*

✓ *Procedure*

→Testing will be performed per IEEE 387 and Regulatory Guide 1.9

✓ *Seismic Qualification*

→Seismic Analysis per IEEE 344

3(a) Gas Turbine Generator as EPS (cont'd)

➢Class 1E Qualification Program of Gas-Turbine Generator

✓ Mitsubishi plans to start the Class 1E qualification of Gas-Turbine Generator soon and will complete it by 06/2009

✓ Mitsubishi will perform the qualification program with two partner companies. One has many years of experience of supplying commercial grade GT/G. The other has extensive experiences of supplying Class 1E DGs to US conventional NPPs, as well as Commercial Grade Dedication per EPRI NP5652

Item	Procedure	Time Table												
		2007				2008						2009		
		05	07	09	11	01	03	05	07	09	11	01	03	05
1) Planning of Class1E Qualification	◆Plan and provide class 1E qualification													
2)Confirmation of Compliance with Standard	◆Confirm the requirement of standards and compliance with them.													
3) Evaluation of Reliability	◆Evaluate the reliability of same type existing GT/G													
4) Technical Report	◆ Documentation of Technical Report ◆Submission of Technical Report													
5)Manufacturing and Packaging	◆Manufacturing of GT and supporting systems. ◆Assemble the GT/G package.													
6) Seismic Analysis	◆Develop detailed analysis procedure ◆Perform analysis													
7) Functional Tests	◆Develop detailed test procedures. (Type test, Functional test) ◆Perform tests.													

3(a) Gas Turbine Generator as EPS (cont'd)

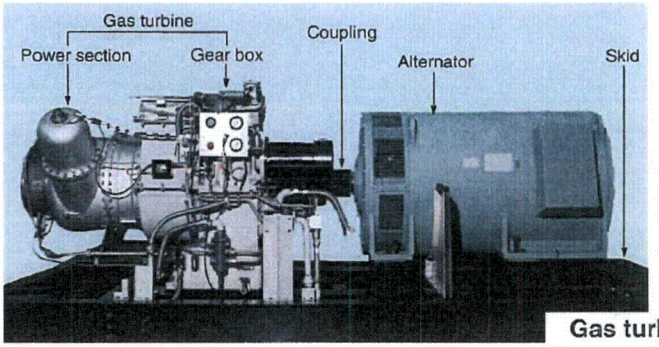

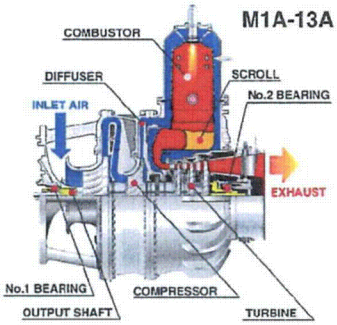

Gas turbine package with exhaust silencer

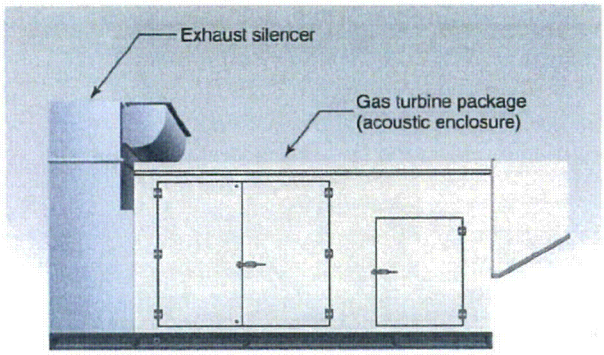

3(a) Gas Turbine Generator as EPS (cont'd)

➢ Plan of Technical Report

✓ Purpose

- ◆Submission of Reliability Data
  - → *Actual Experience with the same type GT/G*
- ◆Demonstration of compliance with US NRC regulation and Industry Standards
  - → *Regulatory Guide 1.9, IEEE-387 etc.*
- ◆Submission of qualification plan

✓ Schedule

- ◆ Submit by November, 2007

3(a) Gas Turbine Generator as EPS (cont'd)

➢ Design in DCD

→ EPS is designed using GT/G

→ Supporting and related systems (Starting, Cooling, Fuel, Lay Out) are evaluated for both of DG and GT/G.

→ Design will be confirmed during the DCD review stage after completion of the Class 1E Qualification of GT/G

3(b) Countermeasures against SBO

➢ Codes, Standards and Regulatory Guides

✓ 10 CFR 50, 50.2

✓ 10 CFR 50, 50.63

✓ USNRC Regulatory Guide 1.155

3(b) Countermeasures against SBO (cont'd)

➢ Basic Concept for Coping with SBO

✓ The alternate AC power sources (AACs) are available in the event of a Station Blackout (SBO), when all offsite power sources and EPSs are not available to bring the unit to a safe shutdown condition and maintain that status

3(b) Countermeasures against SBO (cont'd)

➢ Design Basis

✓ AACs of a different type (Starting System, Capacity etc.) and are provided to minimize the potential for common mode failure with either the offsite power or the EPS system

✓ The AAC is a non-class 1E gas turbine-generator package connected to a 6.9kV AC "Permanent" bus

✓ The AAC supplies power to loads on any class 1E bus through tie line circuits during SBO

✓ The AAC supplies power to loads for 8 hours during SBO

3(b) Countermeasures against SBO (cont'd)

➢ Permanent Buses

- ✓ There are two buses for the exclusive use of each AAC
- ✓ In LOOP condition, required non-safety related loads are supplied via the "Permanent" bus from AAC

	Normal Operation	LOOP	SBO
Class 1E Buses	UAT or RAT	EPS	AAC
"Permanent" Buses	UAT or RAT	AAC	AAC (Only Required Loads)

3(b) Countermeasures against SBO (cont'd)

➢ Operation under the SBO Condition

When a SBO occurs, the AAC power source feeds the selected safety related (Class 1E) division in accordance with the following procedure:

1) Switching will be done manually to prevent starting loads on any other division
2) Loads that need to be stopped on the "permanent" bus will be tripped manually
3) The required breaker to the back-up division will be closed manually
4) Back-up bus will be energized and loaded as necessary for coping with SBO. The loads will be started manually
5) Interlocks will prevent the AAC and EPS operate in parallel on same Class 1E bus.

3(b) Countermeasures against SBO (cont'd)

➢Power supply from AACs under each Condition

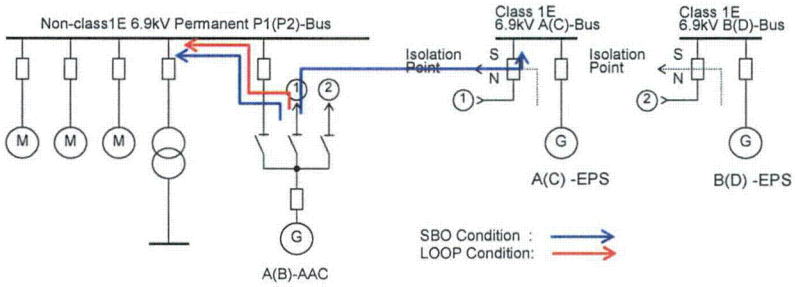

When a LOOP occurs, the AAC supplies to "permanent" bus automatically. Interlocks will prevent the AAC and EPS to be operated in parallel on same bus.

3(b) Countermeasures against SBO (cont'd)

➢ Basic specification of Alternate AC Power Source

✓ Number of Alternate AC Source (s) = Two (2)
(Can be connected to any Division)

✓ Type of Power Source – Gas Turbine Generator

✓ Alternate AC Features

- Meet SBO Rule (10 CFR 50.63), R.G. 1.155
- To minimize the potential for common mode failure between EPS and AAC GT/G the design of the AAC will use:
  - Different type from EPS (size, starting system)
  - Independent AAC fuel tanks
  - No sharing of auxiliaries (e.g. starting air, HVAC)

4. Conclusions

- MHI has presented an overview of the Electrical System design for US-APWR
- Comments and suggestions received from the NRC will be considered to improve the quality of the Design Control Document (DCD)
- Details of Electrical System will be provided in the DCD