TRAINING PROGRAM:

OPERATIONS TRAINING

***LESSON PLAN TITLE:**

Determine Shift Staffing to Meet Shift Requirements

APPROXIMATE TIME REQUIRED: 15 Minutes

PREREQUISITES: NONE

SUPPORTING LESSONS: NONE

☒ New Material ☐ Minor Revision ☐ Major Revision

REASON FOR REVISION:
New JPM

REVIEW / APPROVAL (Print Name): ☐ Electronic Approval (TEAR # _____)

Prepared By:	Preparer	Date
Reviewed By:	Technical Reviewer (e.g., SME, line management)	Date
Instructional Adequacy Determined By:	ITPL (Rev 0); Qualified Instructor (All other revisions)	Date
Approved By:	++Discipline Training Supervisor	Date
Effective Date:	*Date	

++Indicates that the LP has been reviewed by the Training Supervisor for inclusion of Management Expectations and items referenced on the Training Development Review Worksheet

FLEET/REGIONAL PROGRAM CONCURRENCE:
☐ Fleet ☐ ENS ☐ ENN ☒ Not Applicable

ANO		PNPS	
CNPS		RBS	
ECH		VY	
GGNS		WF3	
IPEC		WPO	
JAF			

* Indexing Information

Generic Instructions

1. Standard cues for valve operation:
   a. MOVs:
      1) "Full open" = "red light on, green light off"
      2) "Full closed" = "red light off, green light on"
   b. Manual valves
      1) "Full open" = "you feel resistance in the counter-clockwise direction"
      2) "Full closed" = "you feel resistance in the clockwise direction"

2. The Evaluator should indicate simulated analog gauge readings by pointing a pen or equivalent to the intended place on the gauge.

3. Other methods of simulating control, operation and data collection is at the discretion of the Evaluator.

4. Obtain Shift Management's permission before opening any control panel door or instrument cover.

5 It is expected that the candidate shall locate controlled copies of any required procedures and describe how copies of these procedures would be prepared for use in the field. Only at this time should the evaluator give the candidate previously prepared copies of the procedure(s). This entire procedure need only be performed or simulated once during the entire exam. <u>These activities are not required for JPMs conducted in the Simulator</u>.

6. Consideration of electrical safety must be made during the performance of certain tasks involving electrical circuits and circuit breakers. The performer should be aware that working on or near energized equipment requires, at a minimum, wearing 100% cotton clothing and low voltage (Class 0) gloves while removing or securing shock hazards such as chains, jewelry, watches and metal-framed eyeglasses. Operating or racking circuit breakers may require additional PPE. Details can be found in Att. 2 of the Electrical Safety Rulebook and General Operating procedure 04-S-04-2 (Operation of Electrical Circuit Breakers)

Under no circumstances is any candidate allowed to operate any equipment outside the simulator without the permission of the Evaluator and Shift Management.

ADMIN Task 11: Determine Shift Staffing to Meet Shift Requirements

Setting:	Classroom
Type:	SRO
Task:	SRO-NO-032
K&A:	Generic 2.1.4: 3.4
Safety Function:	N/A
Time Required:	15 minutes
Time Critical:	No
Faulted:	No
Performance:	Perform
Reference(s):	Nuclear Management Manual EN-OP-115 Conduct of Operations. OPG-35 Operator Qualification Verification
Handout(s):	None
# Manipulations:	N/A
# Critical Steps:	1
Group #:	N/A

ADMINISTRATIVE JPM / SRO LEVEL

Simulator Setup/Required Plant Conditions: None.

Safety Concerns: None.

Equipment Needed: Computer with Entergy Internet Access

ADMIN Task 11: Determine Shift Staffing to Meet Shift Requirements

Initial Condition(s):

- The Plant is operating at 100% power.
- An operator has called in sick.
- Your shift is below minimum Fire Brigade staffing.

Initiating Cue(s):

- You are the Control Room Supervisor.
- Determine whether the following operator to be called in meets the requirements to be your replacement Fire Brigade Member USING ON-TRACK ONLINE.

Gary W. Carter

- You already have a Fire Brigade Leader and three other members.

ADMIN Task 11: Determine Shift Staffing to Meet Shift Requirements

Notes

1. This is an Administrative JPM.

Task Overview: This task is to determine the staffing qualifications of an oncoming operator for fire brigade status per Nuclear Management Manual EN-OP-115 Conduct of Operations. It is the responsibility of the Control Room Supervisor to ensure he has sufficient qualified personnel for plant operations.

Task Justification: This task is performed at least weekly by Control Room Supervisors. This is an Administrative JPM.

Tasks: Critical tasks are underlined, italicized, and denoted by (*).
For logging into ON-TRACK ONLINE there are two options either is acceptable.

OPTION 1

☐ Log into the Entergy network.
Standard: Logs onto the Entergy Network from any network computer.
Cue: None.
Notes:

☐ Select the GGNS Home Page.
Standard: Selects the GGNS Home Page.
Cue: None.
Notes:

☐ Select DEPARTMENTS.
Standard: Select DEPARTMENTS.
Cue: None.
Notes: Left side of the screen

☐ Select TRAINING.
Standard: Selects TRAINING.
Cue: None.
Notes: Left side of the screen

OPTION 2

☐ Select START.
Standard: Selects START.
Cue: None.
Notes: Bottom left of the screen

☐ Select NUCLEAR CORPORATE APPS.
Standard: Selects NUCLEAR CORPORATE APPS.
Cue: None.
Notes: Drop down menu

COMMON

☐ Select ON-TRACK ONLINE.
Standard: Selects ON-TRACK ONLINE.
Cue: None.
Notes: Quick link highlighted in blue or listed under Nuclear Corporate Apps

☐ Select SUPERVISOR FUNCTIONS.
Standard: Selects SUPVERVISOR FUNCTIONS.
Cue: None.
Notes: top bar.

☐ Login with Network ID and password is SSN
Standard: Logsin with Network ID and password is SSN.
Cue: None.
Notes: Candidate may need prompting of this. This is acceptable.

☐ Select FIND STAFF.
Standard: Selects FIND STAFF.
Cue: None.
Notes: folders on left

☐ Select BY DEVELOPMENT PLAN.
Standard: Selects BY DEVELOPMENT PLAN.
Cue: None.
Notes: folder under FIND STAFF.

☐ Select SELECT DEVELOPMENT PROGRAM AREA.
Standard: Selects SELECT DEVELOPMENT PROGRAM AREA.
Cue: None.
Notes: Tab in main screen.

☐ Select FIRE PROTECTION.
Standard: Selects FIRE PROTECTION.
Cue: None.
Notes: Drop down menu under SELECT DEVELOPMENT PROGRAM AREA.

☐ Select GRAND GULF.
Standard: Selects GRAND GULF.
Cue: None.
Notes: Drop down menu under FIRE PROTECTION.

☐ Select G-FIRE-FB-FIRE BRIGADE.
Standard: Selects G-FIRE-FB-FIRE BRIGADE.
Cue: None.
Notes: Drop down menu under SELECT DEVELOPMENT PROGRAM AREA.

☐ Select CARTER, GARY W.
Standard: Selects CARTER, GARY W.
Cue: None.
Notes: Drop down menu under SELECT DEVELOPMENT PROGRAM AREA.

☐ Select UNIT – Fire Brigade Classroom Training and checks Complete Next Dates.
Standard: Selects UNIT – Fire Brigade Classroom Training and checks Complete Next Dates.
Cue: None.
Notes: dates on the screen should be acceptable.

☐ Select UNIT – Respiratory Protection Training and checks Complete Next Dates.
Standard: Selects UNIT – Respiratory Protection Training and checks Complete Next Dates.
Cue: None.
Notes: dates on the screen should be acceptable.

☐ Select UNIT – Fire Brigade Physical and checks Complete Next Dates.
Standard: Selects UNIT – Fire Brigade Physical and checks Complete Next Dates.
Cue: None.
Notes: dates on the screen should be acceptable.

☐ Select UNIT – Quarterly Meetings and checks Complete Next Dates.
Standard: Selects UNIT – Quarterly Meetings and checks Complete Next Dates.
Cue: None.
Notes: dates on the screen should be acceptable.

☐ Select UNIT – Fire Drills and checks Complete Next Dates.
Standard: Selects UNIT – Fire Drills and checks Complete Next Dates.
Cue: None.
Notes: dates on the screen should be acceptable.

☐ Select UNIT – Fire Brigade Practice Session and checks Complete Next Dates.
Standard: Selects UNIT – Fire Brigade Practice Session and checks Complete Next Dates.
Cue: None.
Notes: dates on the screen should be acceptable.

□* *Determines Gary W. Carter is Fire Brigade Qualified.*
Standard: Determines Gary W. Carter is Fire Brigade Qualified.
Cue: None.
Notes: Based on information found determines the operator meets the requirements for Fire Brigade

Task Standard(s):

Determines Gary W. Carter is Fire Brigade Qualified.

Name: _____ Time Start: _____ Time Stop: _____

ADMIN Task 11: Determine Shift Staffing to Meet Shift Requirements

Follow-Up Questions & Answers:

Comments:

Determine Shift Staffing to Meet Shift Requirements

Give this page to the student

Initial Condition(s):

- The Plant is operating at 100% power.
- An operator has called in sick.
- Your shift is below minimum Fire Brigade staffing.

Initiating Cue(s):

- You are the Control Room Supervisor.
- Determine whether the following operator to be called in meets the requirements to be your replacement Fire Brigade Member USING ON-TRACK ONLINE.

Gary W. Carter

- You already have a Fire Brigade Leader and three other members.

TRAINING PROGRAM:

OPERATIONS TRAINING

***LESSON PLAN TITLE:**

DETERMINE THE PLANT EOOS FACTOR

APPROXIMATE TIME REQUIRED: 10 Minutes

PREREQUISITES: NONE

SUPPORTING LESSONS: NONE

☒ New Material ☐ Minor Revision ☐ Major Revision

REASON FOR REVISION:
New JPM; Modified from GJPM-SRO-ADM04

REVIEW / APPROVAL (Print Name): ☐ Electronic Approval (TEAR # _____)

Prepared By:	Preparer	Date
Reviewed By:	Technical Reviewer (e.g., SME, line management)	Date
Instructional Adequacy Determined By:	ITPL (Rev 0); Qualified Instructor (All other revisions)	Date
Approved By:	++Discipline Training Supervisor	Date
Effective Date:	*Date	

++Indicates that the LP has been reviewed by the Training Supervisor for inclusion of Management Expectations and items referenced on the Training Development Review Worksheet

FLEET/REGIONAL PROGRAM CONCURRENCE:
☐ Fleet ☐ ENS ☐ ENN ☒ Not Applicable

ANO		PNPS	
CNPS		RBS	
ECH		VY	
GGNS		WF3	
IPEC		WPO	
JAF			

* Indexing Information

Generic Instructions

1. Standard cues for valve operation:
   a. MOVs:
      1) "Full open" = "red light on, green light off"
      2) "Full closed" = "red light off, green light on"
   b. Manual valves
      1) "Full open" = "you feel resistance in the counter-clockwise direction"
      2) "Full closed" = "you feel resistance in the clockwise direction"

2. The Evaluator should indicate simulated analog gauge readings by pointing a pen or equivalent to the intended place on the gauge.

3. Other methods of simulating control, operation and data collection is at the discretion of the Evaluator.

4. Obtain Shift Management's permission before opening any control panel door or instrument cover.

5 It is expected that the candidate shall locate controlled copies of any required procedures and describe how copies of these procedures would be prepared for use in the field. Only at this time should the evaluator give the candidate previously prepared copies of the procedure(s). This entire procedure need only be performed or simulated once during the entire exam. <u>These activities are not required for JPMs conducted in the Simulator</u>.

6. Consideration of electrical safety must be made during the performance of certain tasks involving electrical circuits and circuit breakers. The performer should be aware that working on or near energized equipment requires, at a minimum, wearing 100% cotton clothing and low voltage (Class 0) gloves while removing or securing shock hazards such as chains, jewelry, watches and metal-framed eyeglasses. Operating or racking circuit breakers may require additional PPE. Details can be found in Att. 2 of the Electrical Safety Rulebook and General Operating procedure 04-S-04-2 (Operation of Electrical Circuit Breakers)

Under no circumstances is any candidate allowed to operate any equipment outside the simulator without the permission of the Evaluator and Shift Management.

ADMIN Task 12: Determine the plant EOOS Factor

Setting:	Classroom
Type:	SRO
Task:	SRO-ADMIN-015
K&A:	Generic 2.1.19: 3.0
Safety Function:	N/A
Time Required:	10 minutes
Time Critical:	No
Faulted:	No
Performance:	Perform
Reference(s):	EDP-045 GGNS EOOS Risk Monitor User's Guide
Handout(s):	EDP-045 GGNS EOOS Risk Monitor User's Guide
# Manipulations:	N/A
# Critical Steps:	1
Group #:	N/A

ADMINISTRATIVE JPM / SRO LEVEL

Simulator Setup/Required Plant Conditions: None.

Safety Concerns: None.

Equipment Needed: Shift Manager's Computer in the simulator with the EOOS Program.

ADMIN Task 12: Determine the plant EOOS Factor

Initial Condition(s):

- The Plant is 100% power.

Initiating Cue(s):

- You are the Shift Supervisor.
- Service Transformer 21 is out of service.
- Diesel Driven Fire Pump B is out of service.
- Component Cooling Water Pump B is out of service.
- Determine the EOOS Risk Factor and Plant Safety Index.

Give the candidate a copy of EDP-045 GGNS EOOS Risk Monitor User's Guide

USE the Shift Manager's Computer in the Simulator for the Training Program.

DO NOT USE A COMPUTER CONNECTED TO THE PLANT.

ADMIN Task 12: Determine the plant EOOS Factor

Notes

1. This is an Administrative JPM.

Task Overview: This task is to use the EOOS Computer to assess the Plant Safety Index and Risk Factor for out of service equipment and plant work.

Task Justification: This task is performed any time equipment is removed from service. This is an Administrative JPM.

Tasks: Critical tasks are underlined, italicized, and denoted by (*).

Selection of components and calculation are NOT sequence Critical.

☐ Log onto a computer with the EOOS Computer Program.
Standard: Candidate logs onto a computer with the EOOS Computer Program.
Cue: None
Notes:

At the Shift Manager's Desk the LOGON ID is op and the PASSWORD is left blank.

☐ Select Service Transformer (ST-21) as Out of Service.
Standard: Candidate Select Service Transformer (ST-21) as Out of Service.
Cue: None.
Notes: This can be done by selecting ST-21 as Out of Service or the *Take a Component Out/Return to Service* button.

☐ Select Component Cooling Water Pump B (CCW B) as Out of Service.
Standard: Candidate Select Component Cooling Water Pump B (CCW B) as Out of Service.
Cue: None.
Notes: This can be done by selecting CCW B as Out of Service or the *Take a Component Out/Return to Service* button.

☐ Select Diesel Driven Fire Pump B (C3B) as Out of Service.
Standard: Candidate Select Diesel Driven Fire Pump B (C3B) as Out of Service.
Cue: None.
Notes: This can be done by selecting Fire Pump C3 B as Out of Service or the *Take a Component Out/Return to Service* button.

☐ Select Recalculate Plant Risk Measure button.
Standard: Candidate selects Recalculate Plant Risk Measure button.
Cue: None.
Notes: The EOOS computer will perform the calculations and display the Plant Safety Index and risk color 9.0 YELLOW.

☐* *Plant Safety Index is determined to be 9.0 YELLOW.*
Standard: Candidate determines Plant Safety Index is 9.0 YELLOW.
Cue: None.
Notes:

Task Standard(s):

Plant Safety Index is determined to be 9.0 YELLOW.

Name: _____ Time Start: _____ Time Stop: _____

ADMIN Task 4: Determine the plant EOOS Factor

Follow-Up Questions & Answers:

Comments:

Determine the plant EOOS Factor

Give this page to the student

Initial Condition(s):

- The Plant is 100% power.

Initiating Cue(s):

- You are the Shift Supervisor.
- Service Transformer 21 is out of service.
- Diesel Driven Fire Pump B is out of service.
- Component Cooling Water Pump B is out of service.
- Determine the EOOS Risk Factor and Plant Safety Index.

Give the candidate a copy of EDP-045 GGNS EOOS Risk Monitor User's Guide

USE the Shift Manager's Computer in the Simulator for the Training Program.

DO NOT USE A COMPUTER CONNECTED TO THE PLANT.

TRAINING PROGRAM:

OPERATIONS TRAINING

***LESSON PLAN TITLE:**

PERFORM OPERATIONS SUPERVISOR REVIEW OF TAGOUT

APPROXIMATE TIME REQUIRED: 10 Minutes

PREREQUISITES: NONE

SUPPORTING LESSONS: NONE

☒ New Material ☐ Minor Revision ☐ Major Revision

REASON FOR REVISION:
New JPM; Modified from GJPM-SRO-ADM3

REVIEW / APPROVAL (Print Name): ☐ Electronic Approval (TEAR # _____)

Prepared By:	Preparer	Date
Reviewed By:	Technical Reviewer (e.g., SME, line management)	Date
Instructional Adequacy Determined By:	ITPL (Rev 0); Qualified Instructor (All other revisions)	Date
Approved By:	++Discipline Training Supervisor	Date
Effective Date:	*Date	

++Indicates that the LP has been reviewed by the Training Supervisor for inclusion of Management Expectations and items referenced on the Training Development Review Worksheet

FLEET/REGIONAL PROGRAM CONCURRENCE:
☐ Fleet ☐ ENS ☐ ENN ☒ Not Applicable

ANO		PNPS	
CNPS		RBS	
ECH		VY	
GGNS		WF3	
IPEC		WPO	
JAF			

* Indexing Information

Generic Instructions

1. Standard cues for valve operation:
   a. MOVs:
      1) "Full open" = "red light on, green light off"
      2) "Full closed" = "red light off, green light on"
   b. Manual valves
      1) "Full open" = "you feel resistance in the counter-clockwise direction"
      2) "Full closed" = "you feel resistance in the clockwise direction"

2. The Evaluator should indicate simulated analog gauge readings by pointing a pen or equivalent to the intended place on the gauge.

3. Other methods of simulating control, operation and data collection is at the discretion of the Evaluator.

4. Obtain Shift Management's permission before opening any control panel door or instrument cover.

5 It is expected that the candidate shall locate controlled copies of any required procedures and describe how copies of these procedures would be prepared for use in the field. Only at this time should the evaluator give the candidate previously prepared copies of the procedure(s). This entire procedure need only be performed or simulated once during the entire exam. <u>These activities are not required for JPMs conducted in the Simulator</u>.

6. Consideration of electrical safety must be made during the performance of certain tasks involving electrical circuits and circuit breakers. The performer should be aware that working on or near energized equipment requires, at a minimum, wearing 100% cotton clothing and low voltage (Class 0) gloves while removing or securing shock hazards such as chains, jewelry, watches and metal-framed eyeglasses. Operating or racking circuit breakers may require additional PPE. Details can be found in Att. 2 of the Electrical Safety Rulebook and General Operating procedure 04-S-04-2 (Operation of Electrical Circuit Breakers)

Under no circumstances is any candidate allowed to operate any equipment outside the simulator without the permission of the Evaluator and Shift Management.

ADMIN Task 13: Perform Operations Supervisor Review of Tagout

Setting:	Classroom
Type:	SRO
Task:	SRO-ADMIN-048
K&A:	Generic 2.2.13: 3.8; 2.2.17: 3.5
Safety Function:	N/A
Time Required:	15 minutes
Time Critical:	No
Faulted:	No
Performance:	Perform
Reference(s):	NMM EN-OP-102 Protective and Caution Tagging
Handout(s):	NMM EN-OP-102 Protective and Caution Tagging Candidate copy of Manual Tagout SOI 04-1-01-P11-1 Condensater Storage and Transfer System E-1221 M-1065
# Manipulations:	N/A
# Critical Steps:	1
Group #:	N/A

ADMINISTRATIVE JPM / SRO LEVEL

Simulator Setup/Required Plant Conditions: None.

Safety Concerns: None.

Equipment Needed: None

ADMIN Task 13: Perform Operations Supervisor Review of Tagout

Initial Condition(s):

- The Plant is 100% power.
- Condensate Transfer Pump A (P11-C001A) motor has burned up.
- Condensate Transfer Pump B is in service.

Initiating Cue(s):

- You are the Shift Supervisor.
- A Work Order has been issued to replace the Pump Motor for P11-C001A.
- There will be NO breach of the fluid system portion of the pump.
- The eSOMS Clearance System computer is out of service and the pump must repaired and returned to service ASAP.
- Review the attached Protective clearance as Operations Supervisor for adequacy to hang.

ADMIN Task 13: Perform Operations Supervisor Review of Tagout

Notes

1. This is an Administrative JPM.

Task Overview: This task is to perform the Operations Supervisor review of a tagout for protective tagging.

Task Justification: This task is performed any time equipment is removed from service. Operations SROs are responsible for releasing ALL plant equipment for maintenance and protective tagging.
This is an Administrative JPM.

Tasks: Critical tasks are underlined, italicized, and denoted by (*).

Selection of components and calculation are NOT sequence Critical.

□* *Identifies the tagout is missing the P11-C001A Space Heater Breaker 52-1P42214 from the tagout.*
Standard: Reviews the tagout and determines the P11-C001A Space Heater Breaker 52-1P42214 is not on the tagout and should be to allow motor work.
Cue: None
Notes:

☐ The following components are present on the tagout as required for P11-C001A Motor Replacement:

_____ P11-HS-M604A Handswitch for CNDS XFER PMP A P11-C001A H13-P870-5C STOP

_____ P11-F024A CNDS XFER PMP A DISCH valve (Optional) CLOSED

_____ P11-F026A CNDS XFER PMP A SUCT valve (Optional) CLOSED

_____ 52-142223 CNDS XFER PMP A circuit breaker OPEN

_____ P11-F050A CNDS XFER PMP A CSG VENT valve OPEN

_____ P11-F139A CNDS XFER PMP A CSG DR valve OPEN

Standard: The above components are on the tagout and are acceptable. The Suction and Discharge Valves are there only to keep the pump shaft from potentially turning. The vent and drain valve are to prevent water inside the pump from expanding causing damage to the pump.
Cue: None.
Notes:

Task Standard(s):

Taggout is determined to be inadequate for the work to be done due to P11-C001A Condensate Transfer Pump A Space heater circuit breaker not being opened and tagged.

Name: _____ Time Start: _____ Time Stop: _____

ADMIN Task 13: Perform Operations Supervisor Review of Tagout

Follow-Up Questions & Answers:

Comments:

Perform Operations Supervisor Review of Tagout

Give this page to the student

Initial Condition(s):

- The Plant is 100% power.
- Condensate Transfer Pump A (P11-C001A) motor has burned up.
- Condensate Transfer Pump B is in service.

Initiating Cue(s):

- You are the Shift Supervisor.
- A Work Order has been issued to replace the Pump Motor for P11-C001A.
- There will be NO breach of the fluid system portion of the pump.
- The eSOMS Clearance System computer is out of service and the pump must repaired and returned to service ASAP.
- Review the attached Protective clearance as Operations Supervisor for adequacy to hang.

TRAINING PROGRAM:

OPERATIONS TRAINING

***LESSON PLAN TITLE:**

Review Radioactive Waste Discharge Permit

APPROXIMATE TIME REQUIRED: 10 Minutes

PREREQUISITES: NONE

SUPPORTING LESSONS: NONE

☒ New Material ☐ Minor Revision ☐ Major Revision

REASON FOR REVISION:
New JPM; Modified from GG-1-JPM-SRO-ADM37

REVIEW / APPROVAL (Print Name): ☐ Electronic Approval (TEAR # _____)

Prepared By:	Preparer	Date
Reviewed By:	Technical Reviewer (e.g., SME, line management)	Date
Instructional Adequacy Determined By:	ITPL (Rev 0); Qualified Instructor (All other revisions)	Date
Approved By:	++Discipline Training Supervisor	Date
Effective Date:	*Date	

++Indicates that the LP has been reviewed by the Training Supervisor for inclusion of Management Expectations and items referenced on the Training Development Review Worksheet

FLEET/REGIONAL PROGRAM CONCURRENCE:
☐ Fleet ☐ ENS ☐ ENN ☒ Not Applicable

ANO		PNPS	
CNPS		RBS	
ECH		VY	
GGNS		WF3	
IPEC		WPO	
JAF			

* Indexing Information

Generic Instructions

1. Standard cues for valve operation:
   a. MOVs:
      1) "Full open" = "red light on, green light off"
      2) "Full closed" = "red light off, green light on"
   b. Manual valves
      1) "Full open" = "you feel resistance in the counter-clockwise direction"
      2) "Full closed" = "you feel resistance in the clockwise direction"

2. The Evaluator should indicate simulated analog gauge readings by pointing a pen or equivalent to the intended place on the gauge.

3. Other methods of simulating control, operation and data collection is at the discretion of the Evaluator.

4. Obtain Shift Management's permission before opening any control panel door or instrument cover.

5 It is expected that the candidate shall locate controlled copies of any required procedures and describe how copies of these procedures would be prepared for use in the field. Only at this time should the evaluator give the candidate previously prepared copies of the procedure(s). This entire procedure need only be performed or simulated once during the entire exam. <u>These activities are not required for JPMs conducted in the Simulator</u>.

6. Consideration of electrical safety must be made during the performance of certain tasks involving electrical circuits and circuit breakers. The performer should be aware that working on or near energized equipment requires, at a minimum, wearing 100% cotton clothing and low voltage (Class 0) gloves while removing or securing shock hazards such as chains, jewelry, watches and metal-framed eyeglasses. Operating or racking circuit breakers may require additional PPE. Details can be found in Att. 2 of the Electrical Safety Rulebook and General Operating procedure 04-S-04-2 (Operation of Electrical Circuit Breakers)

Under no circumstances is any candidate allowed to operate any equipment outside the simulator without the permission of the Evaluator and Shift Management.

ADMIN Task 14: Review Radioactive Waste Discharge Permit

Setting:	Classroom
Type:	SRO
Task:	SRO-NO-010
K&A:	Generic 2.3.11: 3.2
Safety Function:	N/A
Time Required:	10 minutes
Time Critical:	No
Faulted:	No
Performance:	Perform
Reference(s):	Administrative Procedure 01-S-08-11 Radioactive Discharge Controls
Handout(s):	Administrative Procedure 01-S-08-11 Radioactive Discharge Controls Candidate Copy of Attachment I Batch Liquid Radwaste Discharge Permit
# Manipulations:	N/A
# Critical Steps:	4
Group #:	N/A

ADMINISTRATIVE JPM / SRO LEVEL

Simulator Setup/Required Plant Conditions: None.

Safety Concerns: None.

Equipment Needed: None.

Initial Condition(s):

- The Radwaste Specialist / Operator has brought a Batch Liquid Radwaste Discharge Permit to the Control Room for approval.

Initiating Cue(s):

- You are the Shift Manager.
- Review the Batch Liquid Radwaste Discharge Permit..

There are 5 critical deficiencies on the Discharge Permit. Typos and spelling errors do NOT count.

ADMIN Task 14: Review Radioactive Waste Discharge Permit

Notes

1. This is an Administrative JPM.

Task Overview: This task is to review a Radioactive Waster Discharge permit per Administrative Procedure 01-S-08-11. This is the responsibility of the Shift Manager to review and approve all radioactive discharges from GGNS.

Task Justification: This task is performed any time Radwaster discharges a tank of liquid to the environment. This is an Administrative JPM.

Tasks: Critical tasks are underlined, italicized, and denoted by (*).

□* *Review the Batch Liquid Radwaste Discharge Permit for readiness for use.*
Standard: SEE Attached Evaluator Copy of permit for marked critical errors on the permit.

Errors are circled and marked with *.

The candidate must find 4 or 5 errors for satisfactory completion of JPM.
Cue: None.
Notes:

Task Standard(s):

Four of five Errors are noted from Batch Liquid Radwaste Discharge Permit.

Name: _____ Time Start: _____ Time Stop: _____

ADMIN Task 14: Review Radioactive Waste Discharge Permit

Follow-Up Questions & Answers:

Comments:

Review Radioactive Waste Discharge Permit

Give this page to the student

Initial Condition(s):

- The Radwaste Specialist / Operator has brought a Batch Liquid Radwaste Discharge Permit to the Control Room for approval.

Initiating Cue(s):

- You are the Shift Manager.
- Review the Batch Liquid Radwaste Discharge Permit..

There are 5 critical deficiencies on the Discharge Permit. Typos and spelling errors do NOT count.

TRAINING PROGRAM:

OPERATIONS TRAINING

***LESSON PLAN TITLE:**

DETERMINE ENTRY INTO SITE EMERGENCY PLAN AND COMPLETE INITIAL NOTIFICATION FORMS

APPROXIMATE TIME REQUIRED: 15 Minutes

PREREQUISITES: NONE

SUPPORTING LESSONS: NONE

☒ New Material ☐ Minor Revision ☐ Major Revision

REASON FOR REVISION:
New JPM; Modified JPM

REVIEW / APPROVAL (Print Name): ☐ Electronic Approval (TEAR # _____)

Prepared By:	Preparer	Date
Reviewed By:	Technical Reviewer (e.g., SME, line management)	Date
Instructional Adequacy Determined By:	ITPL (Rev 0); Qualified Instructor (All other revisions)	Date
Approved By:	++Discipline Training Supervisor	Date
Effective Date:	*Date	

++Indicates that the LP has been reviewed by the Training Supervisor for inclusion of Management Expectations and items referenced on the Training Development Review Worksheet

FLEET/REGIONAL PROGRAM CONCURRENCE:
☐ Fleet ☐ ENS ☐ ENN ☒ Not Applicable

ANO		PNPS	
CNPS		RBS	
ECH		VY	
GGNS		WF3	
IPEC		WPO	
JAF			

* Indexing Information

Generic Instructions

1. Standard cues for valve operation:
   a. MOVs:
      1) "Full open" = "red light on, green light off"
      2) "Full closed" = "red light off, green light on"
   b. Manual valves
      1) "Full open" = "you feel resistance in the counter-clockwise direction"
      2) "Full closed" = "you feel resistance in the clockwise direction"

2. The Evaluator should indicate simulated analog gauge readings by pointing a pen or equivalent to the intended place on the gauge.

3. Other methods of simulating control, operation and data collection is at the discretion of the Evaluator.

4. Obtain Shift Management's permission before opening any control panel door or instrument cover.

5 It is expected that the candidate shall locate controlled copies of any required procedures and describe how copies of these procedures would be prepared for use in the field. Only at this time should the evaluator give the candidate previously prepared copies of the procedure(s). This entire procedure need only be performed or simulated once during the entire exam. <u>These activities are not required for JPMs conducted in the Simulator</u>.

6. Consideration of electrical safety must be made during the performance of certain tasks involving electrical circuits and circuit breakers. The performer should be aware that working on or near energized equipment requires, at a minimum, wearing 100% cotton clothing and low voltage (Class 0) gloves while removing or securing shock hazards such as chains, jewelry, watches and metal-framed eyeglasses. Operating or racking circuit breakers may require additional PPE. Details can be found in Att. 2 of the Electrical Safety Rulebook and General Operating procedure 04-S-04-2 (Operation of Electrical Circuit Breakers)

Under no circumstances is any candidate allowed to operate any equipment outside the simulator without the permission of the Evaluator and Shift Management.

A&E Task 43 Determine Entry into Site Emergency Plan and Complete Initial Notification Forms as applicable

Setting:	Classroom
Type:	SRO
Task:	SRO-A&E-015; SRO-A&E-003
K&A:	Generic 2.4.41: 4.1; 2.4.38: 4.0; 2.4.40: 4.0
Safety Function:	N/A
Time Required:	15 minutes
Time Critical:	**YES**
Faulted:	No
Performance:	Perform
Reference(s):	10-S-01-1
Handout(s):	10-S-01-1; EAL Flow Chart
# Manipulations:	N/A
# Critical Steps:	2
Group #:	N/A

ADMINISTRATIVE JPM

Simulator Setup/Required Plant Conditions: None.

Safety Concerns: None.

Equipment Needed: None.

A&E Task 43 Determine Entry into Site Emergency Plan and Complete Initial Notification Forms as applicable

Initial Condition(s):

- The Plant is 100% power.

Initiating Cue(s):

- You are the Shift Manager.
- A Dry Fuel Storage Cask is being moved from Unit I to the ISFSI Storage Facility.
- The ISFSI Crawler (Transporter) engine caught on fire at 1010 just as the crawler was going around the Combination Shop on the south side of the building.
- The Site Fire Brigade has responded with the Site Fire Truck and has reported the fire is extinguished at 1035 and a reflash watch has been established.
- There is visible damage to the outside of the Dry Fuel Storage Cask.
- The Radiation Protection Technician monitoring the Fire Brigade and Dry Fuel Storage Cask has stated the Radiation Levels adjacent to the cask are two times pre-fire levels.

- Classify this event and complete any initial notification forms that are required.

A&E Task 43 Determine Entry into Site Emergency Plan and Complete Initial Notification Forms as applicable

Notes

1. This is an Administrative JPM.

2. This is an activity performed by an SRO as Emergency Director per the GGNS Emergency Plan Procedures.

Task Overview: This task is to use the Emergency Plan Procedure and Off Normal Event Procedures for classification of plant conditions per the Emergency Action Levels and complete the Initial Notification forms for contact of State and Local Agencies. This is a TIME CRITICAL JPM based on the requirements of 10 CFR50 Appendix E IV.D.3.

Tasks: Critical tasks are underlined, italicized, and denoted by (*).

This is a TIME CRITICAL JPM.

☐ Identify the CONFINEMENT BOUNDARY of a loaded cask has been damaged.
Standard: Candidate uses 10-S-01-1 Section 5.7 to identify the Confinement Boundary has been damaged due to radiation levels being TWO times the pre-event levels in the area of the cask.
Cue: None
Notes: This E-HU1 Unusual Event.

☐ Identify the fire location was within the boundaries of the PROTECTED AREA and lasted for greater than 15 minutes (25 minutes), however, the fire was NOT contiguous to any VITAL AREAS as identified in Table H3
Standard: Candidate uses 10-S-01-1 section 5.42 to identify the Protected Area and determine the fire lasted greater than 15 minutes (25 minutes) but was not contiguous to VITAL AREAS as defined in Table H3, also the fire did not affect structures containing functions or systems required for Safe Shutdown.
Cue: None
Notes:

☐* *Classify the event as an UNUSUAL EVENT.*
Standard: Candidate uses 10-S-01-1 Attachments I and II Initiating Conditions E-HU1 to classify the event as an UNUSUAL EVENT.
Cue: None
Notes:

☐* *Complete the Initial Notification form for contact of State and Local Agencies. (SEE Attached form for critical information.)*
Standard: Candidate completes Initial Notification form.
Cue: None
Notes:

Task Standard(s):

UNUSUAL EVENT is declared per EAL E-HU1 and Initial Notification Form is completed.

Name: _____ Time Start: _____ Time Stop: _____

A&E Task 43 Determine Entry into Site Emergency Plan and Complete Initial Notification Forms as applicable

Follow-Up Questions & Answers:

_____

_____

_____

_____

_____

_____

_____

Comments:

_____

_____

_____

_____

_____

_____

_____

_____

_____

Determine Entry into Site Emergency Plan and Complete Initial Notification Forms as applicable

Give this page to the student

Initial Condition(s):

- The Plant is 100% power.

Initiating Cue(s):

- You are the Shift Manager.
- A Dry Fuel Storage Cask is being moved from Unit I to the ISFSI Storage Facility.
- The ISFSI Crawler (Transporter) engine caught on fire at 1010 just as the crawler was going around the Combination Shop on the south side of the building.
- The Site Fire Brigade has responded with the Site Fire Truck and has reported the fire is extinguished at 1035 and a reflash watch has been established.
- There is visible damage to the outside of the Dry Fuel Storage Cask.
- The Radiation Protection Technician monitoring the Fire Brigade and Dry Fuel Storage Cask has stated the Radiation Levels adjacent to the cask are two times pre-fire levels.

- Classify this event and complete any initial notification forms that are required.

TRAINING PROGRAM:

OPERATOR TRAINING

TITLE:

Rotating CRD FCV's

☐ New Material ☒ Minor Revision ☐ Major Revision ☐ Cancellation

REASON FOR REVISION: Clarification for NRC Exam
THIS DOCUMENT REPLACES: GJPM-OPS-C11011.00

REVIEW / APPROVAL (Print Name): ☐ TEAR Approval (TEAR #)

Prepared By: _____
**Preparer Date

Ops Review++: R. T. Errington 7/30/06
Technical Reviewer (e.g., SME, line management) Date

Validated By: Mike Harrower
Training Representative Date

Approved By: _____
+Discipline Training Supervisor Date

Approval Date:* _____

* Indexing Information
** The requirements of the Training Material Checklist have been met.
+ Indicates that the LP has been reviewed by the Training Supervisor for inclusion of Management Expectations and items referenced on TQJA-201- DD06, Training Material Checklist.
++ Indicates that Operations has reviewed and approved this material for exam use.

FLEET/REGIONAL PROGRAM CONCURRENCE:

☐ Fleet ☐ ENS ☐ ENN ☒ Not Applicable

DATE TRANSMITTED	INITIAL RECEIPT BY RM	RETURNED FOR CORRECTIONS	RETURN RECEIPT (DATE/INITIAL)	FINAL ACCEPTANCE BY RM

TO RM	(DATE/INITIAL)	(DATE/INITIAL)		(DATE/INITIALS)

Generic Instructions

1. Standards and cues for valve operation:
   a. MOVs:
      1) "Turn the valve's handswitch on (panel #)(section#, as applicable) in the (clockwise or counter-clockwise) direction and observe that the valve's red light is (energized or de-energized) and its green light is (energized or de-energized)".
   b. Manual valves
      1) "Turn the valve's handwheel (or other manual operating device) in the (clockwise or counter-clockwise) direction until resistance is felt."

2. The Evaluator should indicate simulated analog gauge readings by pointing a pen or equivalent to the intended place on the gauge.

3. Other methods of simulating control, operation and data collection is at the discretion of the Evaluator.

4. It is expected that the candidate shall locate controlled copies of any required procedures and describe how copies of these procedures would be prepared for use in the field. Only at this time should the evaluator give the candidate previously prepared copies of the procedure(s). This entire procedure need only be performed or simulated once during the entire exam. <u>These activities are not required for JPMs conducted in the Simulator</u>.

5. Consideration of electrical safety must be made during the performance of certain tasks involving electrical circuits and circuit breakers. The performer should be aware that working on or near energized equipment requires, at a minimum, wearing 100% cotton clothing and low voltage (Class 0) gloves while removing or securing shock hazards such as chains, jewelry, watches and metal-framed eyeglasses. Operating or racking circuit breakers may require additional PPE. Details can be found in Att. 2 of the Electrical Safety Rulebook and General Operating procedure 04-S-04-2 (Operation of Electrical Circuit Breakers)

6. Obtain Shift Management's permission before opening any control panel or compartment. Avoid placing any tools, flashlights, pointing devices or any part of your body inside the panel or compartment in a manner that could disturb the operation of any component within or potentially result in an electric shock).

7. Use of lasers as a pointing tool requires Engineering's prior approval of the specific tool for safe use in the Control area. (specifically, the laser's emissions must be verified as not interfering with any component's intended operation or function).

8. During activities within the CAA, consideration must be given to area dose rates. When in a posted Radiation Area, check your EAD for dose rates and minimize time spent in the area. Entry into High Radiation Areas or Contamination Areas is prohibited.

Under no circumstances is any candidate allowed to operate any equipment outside the simulator without the permission of the Evaluator and Shift Management.

C1101 Task 1: Rotate CRD FCVs

Setting: Plant (Inside CAA)

Type:	NLO
Task:	NOB-C11-007
K&A:	201001: A4.03 – 2.9/2.8
Safety Function:	Reactivity Control
Time Required:	28 minutes
Time Critical:	No
Faulted:	No
Performance:	Simulated
Reference(s):	04-1-01-C11-1, Section 5.4
Handout(s):	Sections 1.0, 2.0, 3.0 and 5.4 of SOI 04-1-01-C11-1
# Manipulations:	6
# Critical Steps:	6
Group :	2

Required Plant Conditions:

- CRD FCV Station is accessible.
- ALARA notified in advance of performing this JPM for dose accounting

Safety Concerns:

- Wear standard safety gear
- Follow FME rules for Containment
- Follow RP's directions for contamination control

Initial Condition(s):

- CRD Flow Control Valve A is in service.

Initiating Cue(s):

- Rotate from CRD Flow Control Valve A to CRD Flow Control Valve B.
- Communications are setup at the CRD Flow Control Station.

C1101 Task 1: Rotate CRD FCVs

Notes:

1. This task will be performed at the CRD flow control valve station on the 135' elevation of Containment.

FCV CONTROL LOGIC

The local controller's operating mode is selected by a shuttle valve positioned by an AUTO/MAN knob on the top front of the local controller.

1. In the AUTO mode, the shuttle valve connects the FCV's pneumatic positioner to control air coming from the I/P section of the local controller. Input from the remote controller on P601 operates a servo valve in the I/P section to port air to and from the pneumatic postioner and openand close the valve. Remote controller input, in percent, is indicated by the black needle on the left side of the local controller's output meter. It's value is equal to the value indicated by the horizontal meter on the remote controller
2. In the MANUAL mode, the shuttle valve connects the FCV's pneumatic positioner to control air coming from a control valve in back of and outside the local controller. The control valve is positioned by an OUTPUT ADJUST knob on the bottom front of the local controller. The control valve is similar to the I/P in the AUTO mode in that it ports air to and from the FCV's pneumatic postioner to open and close the FCV. Manual output, in percent, is indicated by the red needle on the right side of the local controller's output meter. It's value is determined solely by the position of the manual control valve on that local controller. Manual output can be raised and lowered regardless of the local controller's operating mode.

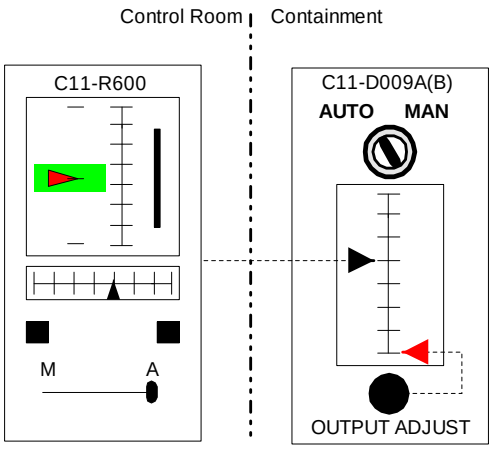

C1101 Task 1: Rotate CRD FCVs

Tasks : Critical tasks are underlined, italicized, and denoted by an (*)

Note : The sequence for the following steps *is* critical

☐ Establish communications with the Control Room.
Standard: Selects a method of communications (sound-powered headset or pager) and briefly demonstrates how communications would be set up
Cue: Evaluator acts as the Control Room operator for communications purposes
Notes: Candidate was informed of communications in Initiating Cue.

☐* *Open manual isolation valve F047A(B) for the FCV to be placed in service*
Standard: Turns the handwheel for valve C11-F047A(B) counter-clockwise until resistance is felt
Cue: You feel resistance in the counter clockwise direction
Notes:

☐* *Place the local controller for the on-coming FCV in MANUAL.*
Standard: Turns the mode switch on the top front of controller C11-FK-D009A(B) to the MAN position
Cue: Controller is in manual
Notes:

☐* *Slowly Open the FCV(F002A/B) being placed in service*

Standard:

1) Turns the OUTPUT ADJ knob on controller C11-FK-D009A(B) for the on-coming FCV clockwise
2) Watches the on-coming FCV (F002A(B)) open while the off-going FCV (F002B(A)) automatically closes

Cue: On-coming valve is going open; off-going valve is going closed

Notes:

☐* *Lower the controller D009B(A) OUTPUT for the FCV to be taken out of service to ZERO and transfer the controller to MANUAL*

Standard:

1) Once the off-going FCV (F002B(A)) is closed, lower its local controller's (D009B(A)) output to zero by turning its MANUAL ADJ knob counter-clockwise until the output (red pointer) indicates zero output
2) *Transfer the off-going FCV's local controller (D009B(A)) to MANUAL by turning its mode switch on the top front of the controller to the MAN position*

Cue:

- ☐ **Off-going FCV is closed**
- ☐ **Off-going valve controller is in MANUAL at ZERO**

Notes:

☐* *Close the off-going FCV's manual isolation valve C11-F047B(A)*

Standard: Closes off-going FCV's manual isolation valve by turning C11-F047B(A) clockwise until resistance is felt

Cue: You feel resistance in the clockwise direction

Notes:

☐ Coordinate with the Control Room to match remote and local output signals.

Standard: Control Room places remote FCV controller C11-FK-R600 in MANUAL and reduces its output (black pointer on local controller) until it matches the output of the on-coming FCV's local controller (red pointer)

Cue: Remote controller is in manual; red and black needles on local controller line up

Notes:

☐* *Place the local controller D009A(B) for the on-coming FCV in AUTO.*

Standard: Turns the mode switch on the top front of controller C11-FK-D009A(B) for the on-coming FCV counter-clockwise to the AUTO position

Cue:

- ☐ **Local controller is in AUTO**
- ☐ **The CRO has nulled the deviation on C11-FK-R600 on H13-P601 and placed it in AUTO**
- ☐ **System flow is 60 gpm as indicated on P601**

Notes:

Task Standard(s):

The standby FCV is in automatic service and CRD drive flow is between 54 and 66 gpm.

Name: _____ Time Start: _____ Time Stop: _____

C1101 Task 1: Rotate CRD FCVs

Follow-Up Questions & Answers:

Comments:

Rotate CRD FCVs

Give this page to the student

Initial Condition(s):

- CRD Flow Control Valve A is in service.

Initiating Cue(s):

- Rotate from CRD Flow Control Valve A to CRD Flow Control Valve B.

TRAINING PROGRAM:

OPERATOR TRAINING

TITLE:

RPS Motor Generator Startup

☐ New Material ☒ Minor Revision ☐ Major Revision ☐ Cancellation

REASON FOR REVISION: Clarification for NRC Exam.
THIS DOCUMENT REPLACES: GJPM-OPS-C7100, REV. 0

REVIEW / APPROVAL (Print Name): ☐ TEAR Approval (TEAR #)

Prepared By:		
	**Preparer	Date
Ops Review++:	R. T. Errington	7/27/06
	Technical Reviewer (e.g., SME, line management)	Date
Validated By:	Steve Reeves	7-13-06
	Training Representative	Date
Approved By:	M. L. Chase	8/7/06
	+Discipline Training Supervisor	Date

Approval Date:* _____

* Indexing Information
** The requirements of the Training Material Checklist have been met.
+ Indicates that the LP has been reviewed by the Training Supervisor for inclusion of Management Expectations and items referenced on TQJA-201- DD06, Training Material Checklist.
++ Indicates that Operations has reviewed and approved this material for exam use.

FLEET/REGIONAL PROGRAM CONCURRENCE:

☐ Fleet ☐ ENS ☐ ENN ☒ Not Applicable

DATE TRANSMITTED TO RM	INITIAL RECEIPT BY RM (DATE/INITIAL)	RETURNED FOR CORRECTIONS (DATE/INITIAL)	RETURN RECEIPT (DATE/INITIAL)	FINAL ACCEPTANCE BY RM (DATE/INITIALS)

Generic Instructions

1. Standards and cues for valve operation:
   a. MOVs:
      1) "Turn the valve's handswitch on (panel #)(section#, as applicable) in the (clockwise or counter-clockwise) direction and observe that the valve's red light is (energized or de-energized) and its green light is (energized or de-energized)".
   b. Manual valves
      1) "Turn the valve's handwheel (or other manual operating device) in the (clockwise or counter-clockwise) direction until resistance is felt."

2. The Evaluator should indicate simulated analog gauge readings by pointing a pen or equivalent to the intended place on the gauge.

3. Other methods of simulating control, operation and data collection is at the discretion of the Evaluator.

4. It is expected that the candidate shall locate controlled copies of any required procedures and describe how copies of these procedures would be prepared for use in the field. Only at this time should the evaluator give the candidate previously prepared copies of the procedure(s). This entire procedure need only be performed or simulated once during the entire exam. <u>These activities are not required for JPMs conducted in the Simulator</u>.

5. Consideration of electrical safety must be made during the performance of certain tasks involving electrical circuits and circuit breakers. The performer should be aware that working on or near energized equipment requires, at a minimum, wearing 100% cotton clothing and low voltage (Class 0) gloves while removing or securing shock hazards such as chains, jewelry, watches and metal-framed eyeglasses. Operating or racking circuit breakers may require additional PPE. Details can be found in Att. 2 of the Electrical Safety Rulebook and General Operating procedure 04-S-04-2 (Operation of Electrical Circuit Breakers)

6. Obtain Shift Management's permission before opening any control panel or compartment. Avoid placing any tools, flashlights, pointing devices or any part of your body inside the panel or compartment in a manner that could disturb the operation of any component within or potentially result in an electric shock).

7. Use of lasers as a pointing tool requires Engineering's prior approval of the specific tool for safe use in the Control area. (specifically, the laser's emissions must be verified as not interfering with any component's intended operation or function).

8. During activities within the CAA, consideration must be given to area dose rates. When in a posted Radiation Area, check your EAD for dose rates and minimize time spent in the area. Entry into High Radiation Areas or Contamination Areas is prohibited.

Under no circumstances is any candidate allowed to operate any equipment outside the simulator without the permission of the Evaluator and Shift Management.

C71 Task 1: RPS Motor/Generator Startup

Setting:	Plant (Outside CAA)
Type:	NLO
Task:	NOB-C71-002; NOB-C71-003; NOB-C71-005; CRO-C71-004
K&A:	212000 A2.01: 3.7/3.9; A1.01: 2.8/2.9; A1.03: 2.4/2.5; G2.1.30: 3.9/3.4
Safety Function:	Instrumentation (7)
Time Required:	18 minutes
Time Critical:	No
Faulted:	No
Performance:	Simulate
Reference(s):	04-1-01-C71-1
Handout(s):	04-1-01-C71-1
# Manipulations:	4
# Critical Steps:	4
Group #:	1

Simulator Setup/Required Plant Conditions:

- Area is accessible

Safety Concerns:

- Do NOT operate plant equipment.
- Extreme caution should be taken around the RPS Motor Generator Set to prevent accidental contact with the controls.
- Use care when working around or near rotating equipment.
- Adjust which RPS Room to go to based on plant Protected Train.

Initial Condition(s):

- The plant is operating at 100% power.
- Repairs have been completed on RPS A(B) Motor/Generator.
- 04-1-01-N32-1 Manual Valve Lineup Checksheet has been completed for C71-PT-N005A – D and C71-PT-N006A - H
- 04-1-01-C71-1 Handswitch Lineup Checksheet, Attachment V, has been completed, as required.
- 04-1-01-C71-1 Electrical Lineup Checksheet, Attachment III, has been completed, as required.
- RPS A(B) Bus is being supplied by the Alternate Feed.

Initiating Cue(s):

- You have been directed to perform section 4.1 of the SOI to startup the RPS A(B) Motor/Generator.

C71 Task 1: RPS Motor/Generator Startup

Notes:

1. JPM may be performed on either RPS A or B Motor/Generator, depending on plant conditions.
2. Att. 1, on page 10, is a drawing of a typical EPA.

Task Overview:

This task is to perform a startup of the RPS Motor Generator and align the RPS Bus to the Normal Supply per the SOI. This task is performed to return RPS power to the Normal Supply.

Task Justification

The following JPM does not meet the minimum requirements of 14-S-02-18. It either does not have the required number of manipulations or critical steps. However it has been deemed a valid JPM in accordance with 14-S-02-18 step 6.3.13 due to the following:

The task has high importance, significant consequences if improperly performed and/or complexity in controlling important plant parameters such as reactivity or reactor water level during transient conditions.

AND

This is a trip critical evolution performed by the non-licensed operators.

Due to a possible loss of offsite power the operator would be required to engerize the RPS system to restore to ability to insert control rods. This task requires the operator to restart the RPS electrical system.

C71 Task 1: RPS Motor/Generator Startup

Tasks : Critical tasks are underlined, italicized, and denoted by an (*)

Note : The sequence for the following steps *is not* critical.

☐ Check open GENERATOR OUTPUT circuit breaker on panel 1C71-S001A(B) on MG set

Standard: Verifies that the circuit breaker's operating handle is in the "down" position, indicating an open breaker

Cue: Circuit breaker handle is down.

Notes:

☐ Check open RPS MG A(B) Output Breakers 1C71-S003A(B) and 1C71-S003C(D)

Standard: Verifies that the EPAs' operating handles are in the "OFF/RESET OPEN" position

Cue: Circuit breakers are in the OFF position.

Notes:

☐ Check test switches on RPS MG A(B) output breakers are in the NORM position

Standard: Verifies that the "Undervoltage", "Overvoltage" and "Underfrequency" test switches on RPS MG A(B) Output Breakers 1C71-S003A(B) and 1C71-S003C(D) are in the NORM position

Cue: All switches in NORM

Notes:

Note : The sequence for the following steps *is* critical.

☐* *Starts RPS MG A(B)*

Standard: Simulates depressing the "MOTOR ON" pushbutton on panel 1C71-S001A(B) until redlight is lit

Cue: Red ON light is lit

Notes:

☐ Check generator output voltage
Standard: Observes voltmeter on motor generator control panel 1C71-S001A(B) is indicating between 122 and 128 VAC
Cue: ***As indicated*** *(if MG is running. 124V if not running))*
Notes:

☐* *Close GENERATOR OUTPUT circuit breaker*
Standard: Simulates pulling up on the circuit breaker's operating handle on panel 1C71-S001A(B) to close the breaker
Cue: ***Circuit breaker handle is up.***
Notes:

☐ Check 1C71-S003A(B) indicating power coming in and power available to go out
Standard Check the ELECT PROT ASSY INPUT and the POWER SUPPLY OUTPUT red lights are lit at the 1C71-S003A(B) ELECTRICAL PROTECTION ASSEMBLY panel
Cue: ***Red lights are lit***
Notes:

☐ Verify the EPA's trip targets are reset
Standard: Verifies the absence of orange "trip target" lights on the following 1C71-S003A(B) relays:
-- UNDER VOLTAGE
-- OVER VOLTAGE
-- UNDER FREQUENCY
Cue: No orange lights noticed
Notes:

☐* *Close breaker 1C71-S003A(B)*
Standard: Simulates closing breaker 1C71-S003A(B) by rotating its operating handle counter-clockwise until it snaps into the "ON" position
Cue: Circuit Breaker handle is in the ON position.
Notes:

☐ Check that power is going out of EPA 1C71-S003A(B)
Standard: Checks that the red ELECT PROT ASSY OUTPUT light on 1C71-S003A(B) is lit
Cue: Red light is lit
Notes:

☐ Check 1C71-S003C(D) indicating power coming in and power available to go out
Standard Check the ELECT PROT ASSY INPUT and the POWER SUPPLY OUTPUT red lights are lit at the 1C71-S003C(D) ELECTRICAL PROTECTION ASSEMBLY panel
Cue: Red lights are lit
Notes:

☐ Verify the EPA's trip targets are reset
Standard: Verifies the absence of orange "trip target" lights on the following 1C71-S003C(D) relays:
-- UNDER VOLTAGE
-- OVER VOLTAGE
-- UNDER FREQUENCY
Cue: No orange lights noticed
Notes:

☐* *Close breaker 1C71-S003C(D)*
Standard: Simulates closing breaker 1C71-S003C(D) by rotating its operating handle counter-clockwise until it snaps into the "ON" position
Cue: Circuit Breaker handle is in the ON position.
Notes:

☐ Check that power is going out of EPA 1C71-S003C(D)
Standard: Checks that the red ELECT PROT ASSY OUTPUT light on 1C71-S003C(D) is lit
Cue: Red light is lit
Notes:

☐ Check GENERATOR A(B) NORMAL FEED AVAILABLE white light are lit on 1H13-P610
Standard: N/A
Cue: RO reports that the white light is lit, and he/she will pick up the task from here
Notes:

Task Standard(s):
RPS A(B) Motor/Generator is running at rated speed and voltage.

Name: _____ Time Start: _____ Time Stop: _____

C71 Task 1: RPS Motor/Generator Startup

Follow-Up Questions & Answers:

Comments:

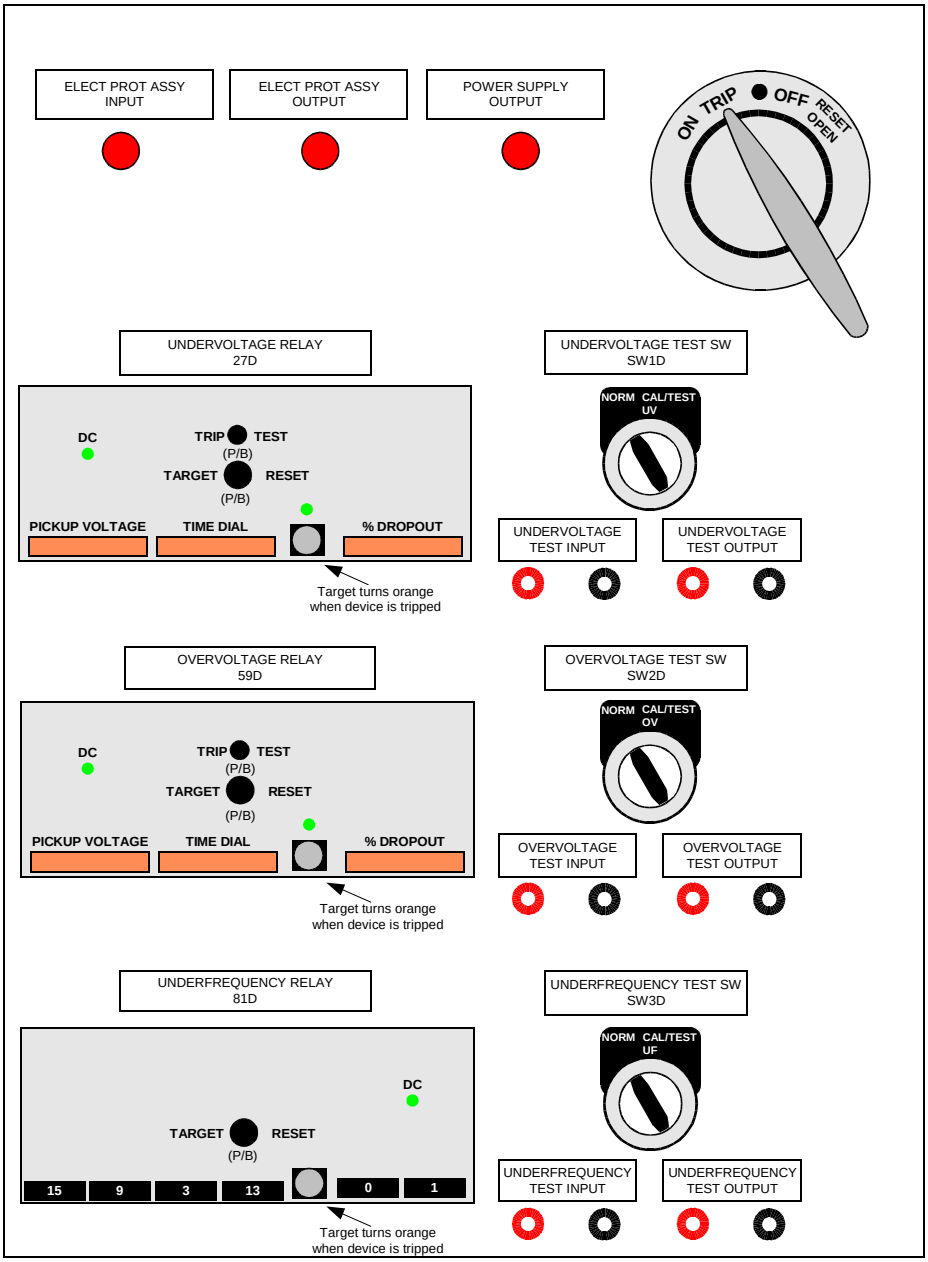

Startup conditions:
- MG is de-energized
- EPA INPUT and EPA OUTPUT lights are off
- POWER SUPPLY OUTPUT light is off
- Breaker in the TRIP position

Startup/reset procedure:
- Startup the MG
  - The EPA INPUT and POWER SUPPLY OUTPUT lights should energize
- Depress the TARGET RESET pushbuttons on all protective relays with activated trip targets.
- Push and rotate the breaker H/S to the RESET-OPEN position then to ON to close the breaker.
  - The EPA OUTPUT light on this EPA, and the EPA INPUT and POWER SUPPLY OUTPUT lights on the downstream EPA, should energize.
- Repeat for the next EPA

Setpoints

Parameter	S003A/C	S003B/D
Undervoltage	< 116.5 V	< 117.4 V
Overvoltage	> 131.3 V	> 131.4 V
Underfrequency	< 57.6 Hz	< 57.6 Hz

All trips have a 3.5 second time delay.

Att. 1

Electric Protective Assembly

RPS Motor/Generator Startup

Give this page to the student

Initial Condition(s):

- The plant is operating at 100% power.
- Repairs have been completed on RPS A(B) Motor/Generator.
- 04-1-01-N32-1 Manual Valve Lineup Checksheet has been completed for C71-PT-N005A – D and C71-PT-N006A - H
- 04-1-01-C71-1 Handswitch Lineup Checksheet, Attachment V, has been completed, as required.
- 04-1-01-C71-1 Electrical Lineup Checksheet, Attachment III, has been completed, as required.
- RPS A(B) Bus is being supplied by the Alternate Feed.

Initiating Cue(s):

- You have been directed to perform section 4.1 of the SOI to startup the RPS A(B) Motor/Generator.
- This task is not time critical.

TRAINING PROGRAM:

OPERATOR TRAINING

TITLE:

Perform Control Room Actions in Response to Fire in Plant

☒ New Material ☐ Minor Revision ☐ Major Revision ☐ Cancellation

REASON FOR REVISION: NEW JPM
THIS DOCUMENT REPLACES: N/A

REVIEW / APPROVAL (Print Name): ☐ TEAR Approval (TEAR #)

Prepared By: _____
**Preparer Date

Ops Review[++]: _____
Technical Reviewer (e.g., SME, line management) Date

Validated By: _____
Training Representative Date

Approved By: _____
[+]Discipline Training Supervisor Date

Approval Date:* _____

* Indexing Information
** The requirements of the Training Material Checklist have been met.
[+] Indicates that the LP has been reviewed by the Training Supervisor for inclusion of Management Expectations and items referenced on TQJA-201- DD06, Training Material Checklist.
[++] Indicates that Operations has reviewed and approved this material for exam use.

FLEET/REGIONAL PROGRAM CONCURRENCE:

☐ Fleet ☐ ENS ☐ ENN ☒ Not Applicable

DATE TRANSMITTED TO RM	INITIAL RECEIPT BY RM (DATE/INITIAL)	RETURNED FOR CORRECTIONS (DATE/INITIAL)	RETURN RECEIPT (DATE/INITIAL)	FINAL ACCEPTANCE BY RM (DATE/INITIALS)

Generic Instructions

1. Standards and cues for valve operation:
   a. MOVs:
      1) "Turn the valve's handswitch on (panel #)(section#, as applicable) in the (clockwise or counter-clockwise) direction and observe that the valve's red light is (energized or de-energized) and its green light is (energized or de-energized)".
   b. Manual valves
      1) "Turn the valve's handwheel (or other manual operating device) in the (clockwise or counter-clockwise) direction until resistance is felt."

2. The Evaluator should indicate simulated analog gauge readings by pointing a pen or equivalent to the intended place on the gauge.

3. Other methods of simulating control, operation and data collection is at the discretion of the Evaluator.

4. It is expected that the candidate shall locate controlled copies of any required procedures and describe how copies of these procedures would be prepared for use in the field. Only at this time should the evaluator give the candidate previously prepared copies of the procedure(s). This entire procedure need only be performed or simulated once during the entire exam. <u>These activities are not required for JPMs conducted in the Simulator</u>.

5. Consideration of electrical safety must be made during the performance of certain tasks involving electrical circuits and circuit breakers. The performer should be aware that working on or near energized equipment requires, at a minimum, wearing 100% cotton clothing and low voltage (Class 0) gloves while removing or securing shock hazards such as chains, jewelry, watches and metal-framed eyeglasses. Operating or racking circuit breakers may require additional PPE. Details can be found in Att. 2 of the Electrical Safety Rulebook and General Operating procedure 04-S-04-2 (Operation of Electrical Circuit Breakers)

6. Obtain Shift Management's permission before opening any control panel or compartment. Avoid placing any tools, flashlights, pointing devices or any part of your body inside the panel or compartment in a manner that could disturb the operation of any component within or potentially result in an electric shock).

7. Use of lasers as a pointing tool requires Engineering's prior approval of the specific tool for safe use in the Control area. (specifically, the laser's emissions must be verified as not interfering with any component's intended operation or function).

8. During activities within the CAA, consideration must be given to area dose rates. When in a posted Radiation Area, check your EAD for dose rates and minimize time spent in the area. Entry into High Radiation Areas or Contamination Areas is prohibited.

Under no circumstances is any candidate allowed to operate any equipment outside the simulator without the permission of the Evaluator and Shift Management.

P64 Task 4: Perform Control Room Actions in Response to Fire in Plant

Setting:	Control Room
Type:	RO
Task:	CRO-P64-004
K&A:	286000 A4.05: 3.3/3.3; A2.09: 2.7/2.8 Generic 2.4.25: 2.9/3.4; 2.4.27: 3.0/3.5; 2.1.30: 3.9/3.4; 2.1.31: 4.2/3.9; 2.1.16: 2.9/2.8
Safety Function:	Plant Systems (8)
Time Required:	5 minutes
Time Critical:	No
Faulted:	No
Performance:	Simulate
Reference(s):	10-S-03-2
Handout(s):	10-S-03-2
# Manipulations:	5
# Critical Steps:	5
Group #:	2

Simulator Setup/Required Plant Conditions:

- Area is accessible
- Do not operate plant equipment.
- Notify the Shift Manager and Control Room Supervisor of JPM Performance.

Safety Concerns:

- DO NOT manipulate Control Room Controls.

Initial Condition(s):

- The plant is operating at 100% power.
- The control room has just been informed there is heavy black smoke in the Auxiliary Building in Area 9 139 ft. elevation.
- All Auxiliary Building air operated isolation valves have failed closed.

Initiating Cue(s):

- You have been directed to perform the Control Room Actions in response to the fire and ensure the Fire Brigade has an adequate supply of water for fire suppression.
- This task is not time critical.

P64 Task 4: Perform Control Room Actions in Response to Fire in Plant

Notes:

1. JPM is to be simulated in the Unit 1 Control Room at the H13-P862 panel.
2. DO NOT OPERATE CONTROL ROOM CONTROLS.
3. Simulate making Plant PA and Radio announcements.

Task Overview:

This task is to perform a start the Motor Driven Fire Pump and align Fire Water to the Unit 1 Auxiliary Building to support Fire Suppression per 10-S-03-2 Response to Fires.

P64 Task 4: Perform Control Room Actions in Response to Fire in Plant

Tasks : Critical tasks are underlined, italicized, and denoted by an (*)

Note : The sequence for the following steps *is not* critical.

☐* *Activate the Fire Alarm and Announce over the plant PA system.*
Standard: Makes an announcement over the plant PA system as to the location of the fire and for the Fire Brigade to respond to the scene. During this announcement activate the Site Fire Alarm.
Cue: PA Announcement and activation of alarm are complete.
Notes: Do NOT allow candidate to make PA announcement or sound alarm. This would activate the actual Fire Brigade.

Candidate should locate the Site Fire Alarm and describe its operation.

Announcement should be similar to this:

"Attention all personnel! There is a (type if known) fire reported at area 9 139 foot elevation in the Auxiliary Building. Fire Brigade to the scene."

CUE: If asked, as Shift Manager direct the candidate to perform the Control Room Actions of the Repsonse to Fires Procedure.

☐* *Announce over the plant radio system.*
Standard: Makes an announcement over the plant radio system as to the location of the fire and for the Fire Brigade to respond to the scene.
Cue: Radio Announcement is complete.
Notes: Do NOT allow candidate to make Radio announcement. This would activate the actual Fire Brigade.

Announcement should be similar to this:

"Attention all personnel! There is a (type if known) fire reported at area 9 139 foot elevation in the Auxiliary Building. Fire Brigade to the scene."

☐* *Verify running or start the motor Driven Fire Pump.*
Standard: Starts the Motor Driven Fire Pump by depressing the START pushbutton on P862 and observes red light on green light off
Cue: If asked prior to manipulation cue candidate the green light is on red light is off. Once the candidate performs the action cue red light on green light off

Notes:
DO NOT allow candidate to operate control room controls.

☐* *Check open or open 1P64-F010A Fire Water Header Auxiliary Building Isolation Bypass.*
Standard: Observes 1P64-F010A is closed and opens the valve by rotating the handswitch clockwise and observing red light on green light off.
Cue: If asked prior to manipulation cue candidate the green light is on red light is off. Once the candidate performs the action cue red light on green light off
Notes: Handswitch is on P862.

☐* *Check open or open 1P64-F010B Fire Water Header Auxiliary Building Isolation Bypass.*
Standard: Observes 1P64-F010B is closed and opens the valve by rotating the handswitch clockwise and observing red light on green light off.
Cue: If asked prior to manipulation cue candidate the green light is on red light is off. Once the candidate performs the action cue red light on green light off
Notes: Handswitch is on P862.

Task Standard(s):
Fire Brigade has been dispatched and the Motor Driven Fire Pump is operating and fire water is aligned to the Auxiliary Building.

Name: _____ Time Start: _____ Time Stop: _____

P64 Task 4: Perform Control Room Actions in Response to Fire in Plant

Follow-Up Questions & Answers:

Comments:

Perform Control Room Actions in Response to Fire in Plant

Give this page to the student

Initial Condition(s):

- The plant is operating at 100% power.
- The control room has just been informed there is heavy black smoke in the Auxiliary Building in Area 9 139 ft. elevation.
- All Auxiliary Building air operated isolation valves have failed closed.

Initiating Cue(s):

- You have been directed to perform the Control Room Actions in response to the fire and ensure the Fire Brigade has an adequate supply of water for fire suppression.
- This task is not time critical.

ES-301 **Control Room/In-Plant Systems Outline** **Form ES-301-2**

Facility: **Grand Gulf Nuclear Station**	Date of Examination: **21 May 2007**
Exam Level (circle one) RO / SRO-I / **SRO-U**	Operating Test Number:

Control Room Systems@ (8 for RO; 7 for SRO-I; 2 or 3 for SRO-U, including 1 ESF)		
System / JPM Title	**Type Code***	**Safety Function**
a. 202001 Recirculation System – Startup idle Recirculation Pump w/ FCV fails to full open.	S; N; A	4
b. N/A		
c. N/A		
d. N/A		
e. 223001 Primary Containment System and Auxiliaries – Raise Suppression Pool Level using RCIC/HPCS	S; N; A	5 ESF
f. 262001 AC Electrical Distribution – Split BOP/ESF Loads followed by loss of transformer.	S; M; A	6 ESF
g. N/A		
h. N/A		
In-Plant Systems@ (3 for RO; 3 for SRO-I; 3or2 for SRO-U)		
i. N/A		
j. 201001 Control Rod Hydraulic System – *Rotate CRD Flow Control Valves*	R; N	1
k. 295016 Control Room Abandonment – Start SSW A & B and supply loads from Remote Shutdown Panel	N; E; L	*8* ESF

@ All RO and SRO-I control room (and in-plant) systems must be different and serve different safety functions; all 5 SRO-U systems must serve different safety functions; in-plant systems and functions may overlap those tested in the control room.

* Type Codes	Criteria for RO / SRO-I / SRO-U
(A)lternate path	4-6 / 4-6 / 2-3
(C)ontrol Room	
(D)irect from bank	≤9 / ≤8 / ≤4
(E)mergency or abnormal in-plant	≥1 / ≥1 / ≥1
(L)ow-Power	≥1 / ≥1 / ≥1
(N)ew or (M)odified from bank including 1(A)	≥2 / ≥2 / ≥1
(P)revious 2 exams	≤3 / ≤3 / ≤2 (randomly selected)
(R)CA	≥1 / ≥1 / ≥1
(S)imulator	

TRAINING PROGRAM:

OPERATOR TRAINING

TITLE:

Operate Turbine Pressure Control / SRVs

☒ New Material ☐ Minor Revision ☐ Major Revision ☐ Cancellation

REASON FOR REVISION: NEW JPM
THIS DOCUMENT REPLACES: N/A

REVIEW / APPROVAL (Print Name): ☐ TEAR Approval (TEAR #)

Prepared By: _____
**Preparer Date

Ops Review++: _____
Technical Reviewer (e.g., SME, line management) Date

Validated By: _____
Training Representative Date

Approved By: _____
+Discipline Training Supervisor Date

Approval Date:* _____

* Indexing Information
** The requirements of the Training Material Checklist have been met.
+ Indicates that the LP has been reviewed by the Training Supervisor for inclusion of Management Expectations and items referenced on TQJA-201- DD06, Training Material Checklist.
++ Indicates that Operations has reviewed and approved this material for exam use.

FLEET/REGIONAL PROGRAM CONCURRENCE:

☐ Fleet ☐ ENS ☐ ENN ☒ Not Applicable

DATE TRANSMITTED	INITIAL RECEIPT BY RM	RETURNED FOR CORRECTIONS	RETURN RECEIPT	FINAL ACCEPTANCE BY RM

TO RM	(DATE/INITIAL)	(DATE/INITIAL)	(DATE/INITIAL)	(DATE/INITIALS)

Generic Instructions

1. Standards and cues for valve operation:
   a. MOVs:
      1) "Turn the valve's handswitch on (panel #)(section#, as applicable) in the (clockwise or counter-clockwise) direction and observe that the valve's red light is (energized or de-energized) and its green light is (energized or de-energized)".
   b. Manual valves
      1) "Turn the valve's handwheel (or other manual operating device) in the (clockwise or counter-clockwise) direction until resistance is felt."

2. The Evaluator should indicate simulated analog gauge readings by pointing a pen or equivalent to the intended place on the gauge.

3. Other methods of simulating control, operation and data collection is at the discretion of the Evaluator.

4. It is expected that the candidate shall locate controlled copies of any required procedures and describe how copies of these procedures would be prepared for use in the field. Only at this time should the evaluator give the candidate previously prepared copies of the procedure(s). This entire procedure need only be performed or simulated once during the entire exam. <u>These activities are not required for JPMs conducted in the Simulator</u>.

5. Consideration of electrical safety must be made during the performance of certain tasks involving electrical circuits and circuit breakers. The performer should be aware that working on or near energized equipment requires, at a minimum, wearing 100% cotton clothing and low voltage (Class 0) gloves while removing or securing shock hazards such as chains, jewelry, watches and metal-framed eyeglasses. Operating or racking circuit breakers may require additional PPE. Details can be found in Att. 2 of the Electrical Safety Rulebook and General Operating procedure 04-S-04-2 (Operation of Electrical Circuit Breakers)

6. Obtain Shift Management's permission before opening any control panel or compartment. Avoid placing any tools, flashlights, pointing devices or any part of your body inside the panel or compartment in a manner that could disturb the operation of any component within or potentially result in an electric shock).

7. Use of lasers as a pointing tool requires Engineering's prior approval of the specific tool for safe use in the Control area. (specifically, the laser's emissions must be verified as not interfering with any component's intended operation or function).

8. During activities within the CAA, consideration must be given to area dose rates. When in a posted Radiation Area, check your EAD for dose rates and minimize time spent in the area. Entry into High Radiation Areas or Contamination Areas is prohibited.

Under no circumstances is any candidate allowed to operate any equipment outside the simulator without the permission of the Evaluator and Shift Management.

B21 Task 10: Operate Turbine Pressure Control / SRVs

Setting: Simulator

Type:	RO
Task:	CRO-B21-010; CRO-N32(2)-009
K&A:	241000 A2.03 – 4.1/4.2; A3.08 – 3.8/3.8; A4.06 – 3.9/3.9 239002 A4.01 – 4.4/4.4; A4.05 – 4.3/4.3 295025 EA1.02 – 3.8/3.8; EA1.03 – 4.4/4.4
Safety Function:	3
Time Required:	10 minutes
Time Critical:	No
Faulted:	**YES**
Performance:	Actual
Reference(s):	04-1-01-N32-2 Att V; 04-1-01-B21-1
Handout(s):	None
# Manipulations:	4
# Critical Steps:	4
Group:	1

Simulator

Simulator Setups:

- IC 19
- Insert malfunctions
  - c11164@20% Scram Discharge volumen hydraulic block
  - tc079@ 0% Pressure Controller failure on Trigger 1
  - tc082a@0% Bypass Control Valve A closed Trigger 2
  - tc082b@0% Bypass Control Valve B closed Trigger 2
  - tc082c@0% Bypass Control Valve C closed Trigger 2
- Take Simulator out of freeze and place the mode switch to SHUTDOWN.
- Initiate ATWS ARI.
- Initiate and override HPCS.
- Inhibit ADS.

Turn simulator over to candidate.

Safety Concerns:

- None

B21 Task 10: Operate Turbine Pressure Control / SRVs

Initial Condition(s):

- The plant was operating at 100% power when a scram occurred.
- All Control rods did not fully insert.
- Emergency Operating Procedure 2A has been entered.

Initiating Cue(s):

- You have been directed to take RPV Pressure Control and lower pressure reference setpoint to 900 psig. Maintain RPV pressure 800 – 1060 psig.
- Other operators will control other plant parameters.
- Report when pressure is being controlled on the Main Turbine Bypass Valves at 900 psig.

B21 Task 10: Operate Turbine Pressure Control / SRVs

Notes

1. All controls will be from panels P601 and P680 in the Main Control Room.

Task Overview:

This task places the Turbine Pressure Control System operating on the Manual Bypass Jack followed by a failure of the Bypass Valves to open. This requires an alternate method of RPV pressure control using SRVs and a band of 800 to 1060 psig.

Task Justification:

The following JPM does not meet the minimum requirements of 14-S-02-18. It either does not have the required number of manipulations or critical steps. However it has been deemed a valid JPM in accordance with 14-S-02-18 step 6.3.13 due to the following:

This task involves observing the reaction of the Main Steam Bypass Control Valves under ATWS conditions when they are to be used to control RPV pressure. The candidate will have to evaluate the response of the valves to changing RPV pressure. Once the valves fail alternate pressure control methods will be employed.

This task is selected because RPV Pressure Control during an ATWS is a critical parameter to limit the cycling of the RPV, the problems presented to the operator controlling RPV water level and the power oscillations that occur when RPV pressure cycles.

In all cases preferred heat sink for the RPV is the Main Condenser either through the Main Turbine, Main Steam Bypass Valves, or Main Steam Line Drains. An accepted means of RPV pressure control is the use of SRVs. This is least desired during an ATWS due to the amount of heat being dumped into Primary Containment and the challenge it may present.

This JPM uses two different means of RPV pressure control.

B21 Task 10: Operate Turbine Pressure Control / SRVs

Tasks: critical tasks are underlined, italicized and denoted by (*)

Note: Sequence is critical for critical tasks unless otherwise noted.

€* *Lowers Turbine Pressure Reference Setpoint on P680 to 900 psig.*
Standard: Uses the LOWER pushbutton on section 9C of P680 for PRESS REF to lower the Pressure Reference Setpoint to 900 psig (± 30 psig) (indicated on N32-R610 or N32-R672 section 9B).
Cue: As Indicated
Notes:

SIMULATOR OPERATOR: Once candidate reports Turbine Pressure reference is at 900psig (± 30 psig), ACTIVATE Trigger 1. (Turbine Bypass Control Valves will fail closed.)

CUE: When candidate reports failure of the Turbine Bypass Valves closed, as Control Room Supervisor order the candidate to attempt to control pressure using the Manual Bypass Jack in a pressure band 800 – 1060 psig.

€* *Energize Manual Bypass Valve Controller by simultaneously depressing MANUAL BYPASS CONTROL RELEASE pushbutton and the MANUAL BYPASS VALVE CONTROLLER ON pushbutton until ON pushbutton remains illuminated.*

Standard: On P680 section 9C energizes Manual Bypass Valve Controller by simultaneously depressing MANUAL BYPASS CONTROL RELEASE pushbutton and the MANUAL BYPASS VALVE CONTROLLER ON pushbutton until ON pushbutton remains illuminated

Cue: As Indicated

Notes: In some cases this may take more than one try, this is acceptable as long as the task is accomplished.

€* *Using the RAISE and/or LOWER pushbuttons open the Turbine Bypass Control Valves to maintain RPV pressure 800 – 1060psig*

Standard: Depresses RAISE and /or LOWER pushbuttons to open the Turbine Bypass Control Valves.

Cue: As Indicated

Notes: Valve indication is located on P680-9D meters N11-R602A, B, C. These valves are slow to react.

When Bypass valves open slightly demonstrating the candidate can open the valves, SIMULATOR OPERATOR Activate Trigger 2. (Turbine Bypass Control Valves failed closed.)

CUE: When candidate reports failure of the Turbine Bypass Valves closed, as Control Room Supervisor order the candidate to attempt to control pressure using SRVs in a pressure band 800 – 1060 psig.

€* *Manually open SRVs to maintain RPV pressure 800 – 1060psig*

Standard: Manually opens SRVs on P601 by rotating their handswitches clockwise and observing the red light on and green light off to maintain RPV pressure 800 – 1060psig.

Cue: As Indicated

Notes: Valve controls are located on P601-19C. Pressure indication is on P601 section 20B B21-UR-R623A and section 17B B21-UR-R623B Post Accident Recorders.

Candidate may verify Reactor Power and Pressure then observe the already open SRVs then adjust number of open SRVs as required to establish RPV pressure in band.

When the Evaluator is satisfied with control the JPM may be terminated.

Task Standard(s):

RPV Pressure is being maintained using SRVs between 800 – 1060 psig..

Name: _____Time Start: _____Time Stop: _____

B21 Task 10: Operate Turbine Pressure Control / SRVs

Follow-Up Questions & Answers:

Comments:

Operate Turbine Pressure Control

Give this page to the student

Initial Condition(s):

- The plant was operating at 100% power when a scram occurred.
- All Control rods did not fully insert.
- Emergency Operating Procedure 2A has been entered.

Initiating Cue(s):

- You have been directed to take RPV Pressure Control and lower pressure reference setpoint to 900 psig. Maintain RPV pressure 800 – 1060 psig.
- Other operators will control other plant parameters.
- Report when pressure is being controlled on the Main Turbine Bypass Valves at 900 psig.

TRAINING PROGRAM:

OPERATOR TRAINING

TITLE:

Return Recirc Loop to Service at Power

☒ New Material ☐ Minor Revision ☐ Major Revision ☐ Cancellation

REASON FOR REVISION: NEW JPM
THIS DOCUMENT REPLACES: N/A

REVIEW / APPROVAL (Print Name): ☐ TEAR Approval (TEAR #)

Prepared By: _____
**Preparer Date

Ops Review++: _____
Technical Reviewer (e.g., SME, line management) Date

Validated By: _____
Training Representative Date

Approved By: _____
+Discipline Training Supervisor Date

Approval Date:* _____

* Indexing Information
** The requirements of the Training Material Checklist have been met.
+ Indicates that the LP has been reviewed by the Training Supervisor for inclusion of Management Expectations and items referenced on TQJA-201- DD06, Training Material Checklist.
++ Indicates that Operations has reviewed and approved this material for exam use.

FLEET/REGIONAL PROGRAM CONCURRENCE:

☐ Fleet ☐ ENS ☐ ENN ☒ Not Applicable

DATE TRANSMITTED	INITIAL RECEIPT BY RM	RETURNED FOR CORRECTIONS	RETURN RECEIPT	FINAL ACCEPTANCE BY RM

TO RM	(DATE/INITIAL)	(DATE/INITIAL)	(DATE/INITIAL)	(DATE/INITIALS)

Generic Instructions

1. Standards and cues for valve operation:
   a. MOVs:
      1) "Turn the valve's handswitch on (panel #)(section#, as applicable) in the (clockwise or counter-clockwise) direction and observe that the valve's red light is (energized or de-energized) and its green light is (energized or de-energized)".
   b. Manual valves
      1) "Turn the valve's handwheel (or other manual operating device) in the (clockwise or counter-clockwise) direction until resistance is felt."

2. The Evaluator should indicate simulated analog gauge readings by pointing a pen or equivalent to the intended place on the gauge.

3. Other methods of simulating control, operation and data collection is at the discretion of the Evaluator.

4. It is expected that the candidate shall locate controlled copies of any required procedures and describe how copies of these procedures would be prepared for use in the field. Only at this time should the evaluator give the candidate previously prepared copies of the procedure(s). This entire procedure need only be performed or simulated once during the entire exam. <u>These activities are not required for JPMs conducted in the Simulator</u>.

5. Consideration of electrical safety must be made during the performance of certain tasks involving electrical circuits and circuit breakers. The performer should be aware that working on or near energized equipment requires, at a minimum, wearing 100% cotton clothing and low voltage (Class 0) gloves while removing or securing shock hazards such as chains, jewelry, watches and metal-framed eyeglasses. Operating or racking circuit breakers may require additional PPE. Details can be found in Att. 2 of the Electrical Safety Rulebook and General Operating procedure 04-S-04-2 (Operation of Electrical Circuit Breakers)

6. Obtain Shift Management's permission before opening any control panel or compartment. Avoid placing any tools, flashlights, pointing devices or any part of your body inside the panel or compartment in a manner that could disturb the operation of any component within or potentially result in an electric shock).

7. Use of lasers as a pointing tool requires Engineering's prior approval of the specific tool for safe use in the Control area. (specifically, the laser's emissions must be verified as not interfering with any component's intended operation or function).

8. During activities within the CAA, consideration must be given to area dose rates. When in a posted Radiation Area, check your EAD for dose rates and minimize time spent in the area. Entry into High Radiation Areas or Contamination Areas is prohibited.

Under no circumstances is any candidate allowed to operate any equipment outside the simulator without the permission of the Evaluator and Shift Management.

B33 Task 11: Return Recirc Loop to Service at Power

Setting: Simulator

Type:	RO
Task:	CRO-B33(1)-011
K&A:	202001 A2.05 – 3.8/4.0; A2.24 – 3.1/3.1; A3.01 – 3.1/3.1; A3.02 – 3.1/3.0; A3.06 – 3.6/3.6; A4.01 – 3.7/3.7; A4.02 – 3.5/3.4; A4.12 – 3.9/3.8 202002 A1.01 – 3.2/3.2; A1.05 – 3.6/3.6; A1.06 – 3.4/3.3; A1.07 – 3.1/3.1; A1.08 – 3.4/3.4; A3.01 – 3.6/3.4; A4.04 – 3.8/3.8; A4.08 – 3.3/3.3; A4.09 – 3.2/3.3 295014 AA1.02 – 3.6/3.8; AA2.03 – 4.0/4.3
Safety Function:	1/4
Time Required:	30 minutes
Time Critical:	No
Faulted:	**YES**
Performance:	Actual
Reference(s):	04-1-01-B33-1; 05-1-02-III-3; EN-OP-115
Handout(s):	04-1-01-B33-1
# Manipulations:	6 or 7
# Critical Steps:	5 or 6
Group:	2

Simulator

Simulator Setups:

- IC 13 Raise power with control rods to 45% power and shift Recirc Pump A to Fast Speed.
- Trip Recirc Pump B and close the Flow Control Valve to MIN ED position.
- Depress STOP LOCK pushbutton for Recirc Pump B.
- Insert malfunction
    - rr173b @ 3% Recirc Flow Control Valve ramp open.

Safety Concerns:

- None

B33 Task 11: Return Recirc Loop to Service at Power

Initial Condition(s):

- The plant was operating at 45% power when Recirc Pump B tripped on transfer to Fast Speed.
- Electricians corrected the problem with CB-5B that resulted in the Control Power Fuse blowing.
- Recirc Pump 'A' is operating in Fast Speed.
- Seal Purge to Recirc Pump 'B' has been verified at normal pressures.
- Reactor Engineering has verified the plant is operating at < 75% Rod Line and that FCBB is < 1.0.
- Recirc Flow Control Valve is at the MIN ED position.
- Unit 1 Instrument Air Compressor is in lead.
- FCTR has been placed in the SETUP mode.
- Recirc Loop 'A' is operating < 22,300 gpm.
- ALL annunciators associated with the 'B' Hydraulic Power Unit and cooling to Recirc Pump 'B' are clear.
- Chemistry and Radiation Protection have been notified of the Recirc Pump start.
- The Idle Loop Startup Surveillance 06-OP-1B33-V-0005 is being performed by another operator.
- Reactor Water level has been raised to 40 inches.
- All Recirc Pump Temperatures are normal.
- Feedwater flow is > 4.5 Mlbm/hr.
- Reactor Dome temperature is >7.4 degrees above Recirc Loop B.

Initiating Cue(s):

- You have been directed to return Recirc Loop B to service.
- Other operators will control other plant parameters.

B33 Task 11: Return Recirc Loop to Service at Power

Notes

1. All controls will be from panels P680 and P807 in the Main Control Room.

Task Overview:

This task returns a Reactor Recirc Loop to service with the plant above 30% power with conditions such that the pump should operate in Fast Speed. Following the pump start the Flow Control Valve will ramp to full open on its own. This will require operator action to reduce the impact on the Reactor.

B33 Task 11: Return Recirc Loop to Service at Power

Tasks: critical tasks are underlined, italicized and denoted by (*)

Note: Sequence is critical for critical tasks unless otherwise noted.

€ Check the following Breaker positions for Recirc Pump B:
____ CB-3B, RECIRC PMP FDR B DRIVE MOTOR BKR 252-1205B CLOSED
____ CB-4B, RECIRC PMP FDR 252-1205C CLOSED
____ CB-1B, LFMG B MTR FDR 152-1411 OPEN
____ CB-2B, LFMG B GEN FDR 252-1205A OPEN
____ CB-5B, RECIRC PMP B FDR 252-1205 OPEN
Standard: Observes Breaker indication for Recric Pump B CB-3B and 4B should be red light on green light off, CB-1B, 2B and 5B should be green light on red light off on P680.
Cue: As Indicated
Notes: Indications are on P680 section 3C.

NOTE: Candidate may verify Recirc Pump B seal pressures and HPU operation. These were given in the Initial Conditions and are as indicated.

€* *Raise BOP Transformer tap setting to raise bus voltage on bus 12HE to about 7.2KV.*
Standard: On P807 raises tap setting on BOP Transformer for bus 12HE to about 7.2 KV as indicated on R22-R603 section 2B of P807.
Cue: As Indicated
Notes:

CUE: Surveillance 06-OP-1B33-V-0005 was just completed one minute ago satisfactorily.

€* *Depress RELEASE pushbutton on the RECIRC PMP B STOP/STOP LOCK pushbutton.*
Standard: Depresses RELEASE pushbutton on Recirc Pump B Stop/Stop Lock pushbutton.
Cue: As Indicated
Notes: Pushbutton is located on P680 section 3C.

€* *Depress START pushbutton on RECIRC PMP B TRANS TO LFMG/START pushbutton.*
Standard: Depresses START pushbutton on RECIRC PMP B TRANS TO LFMG/START pushbutton.
Cue: As Indicated
Notes: Pushbutton is located on P680 section 3C.

€ Observe the following for Recirc Pump B:
____ CB-5B, RECIRC PMP B FDR 252-1205 CLOSE (red light on green light off)
____ RECIRC PMP B amps increase
____ RECIRC PMP B rpm increase to 1800 rpm
Standard: Observes indications for Recric Pump B on P680.
Cue: As Indicated
Notes: Indications are on P680 section 3B & C.

€ Lower BOP Transformer tap setting to lower bus voltage on bus 12HE to about 7KV.
Standard: On P807 lowers tap setting on BOP Transformer for bus 12HE to about 7 KV as indicated on R22-R603 section 2B of P807.
Cue: As Indicated
Notes:

€ Check proper pump and Jet pump operation on P680.
Standard: On P680 section 3B looks at indications for jet pump flows, Recirc Loop Flow, Core Flow, Seeal Pressures.
Cue: As Indicated
Notes:

€* *Balance flow between Recirc Loops A and B to establish less than 10% differential by opening on Recirc Pump B Flow Control Valve B.*
Standard: Raises Recirc Loop B 0Flow Control Valve position to raise Recirc Loop B flow.
Cue: As Indicated
Notes: Slide switch on P680 section 3D indication is on section 3B recorder 1C51-FR-R614 (Loop B is the red pen indication.).

SIMULATOR OPERATOR when candidate raises on Loop Flow, ACTIVATE

Trigger 1

The candidate may attempt one of several options.

€ Attempt to lower on the B Loop Flow Control Valve Control.
Standard: Places Recirc Loop B Flow Control Valve control to LOWER position to lower Recirc Loop B flow.
Cue: As Indicated
Notes: Slide switch on P680 section 3D indication is on section 3B recorder 1C51-FR-R614 (Loop B is the red pen indication.). THIS ACTION WILL HAVE NO EFFECT.

Option 1

€* *Trip Recirc Pump B Hydraulic Power Unit to stop valve movement.*
Standard: Arms and depresses HPU B SHUTDN pushbutton on P680.
Cue: As Indicated
Notes: Armed collar pushbutton on P680 section 3C. This action will stop valve movement.

This action keeps the Recirc Pump operating, however Reactor Engineering will have to determine the affects on the core.

Option 2

€* *Trip Recirc Pump B by depressing STOP or STOP LOCK pushbutton.*
Standard: Trips Recirc Pump B by depressing STOP or STOP LOCK pushbutton on P680 indication will be green light on red light off for CB-5B.
Cue: As Indicated
Notes: Pushbutton on P680 section 3C. This action will trip the Recirc pump to off.

Option 3
This action will require entry into the Reduction of Recirculation Flow ONEP 05-1-02-III-3.

€* *Close RECIRC PMP B DISCH VLV B33-F067B.*
Standard: Closes B33-F067B by depressing CLOSE pushbutton on P680 indication will be green light on red light off.
Cue: As Indicated
Notes: Pushbutton on P680 section 3C. This action will be performed if the option of Tripping the Recirc pump is taken. If the Recirc Pump remains operating this item is not critical.

€ Plot operation on Power to Flow map.
Standard: Plots operation using rms and depresses HPU B SHUTDN pushbutton on P680.
Cue: As Indicated
Notes: Plot should be in the Monitor Region.

Task Standard(s):

Actions have been taken to limit reactor power rise due to the Recirc Flow Control Valve malfunction.

Name: _____Time Start: _____Time Stop: _____

B33 Task 11: Return Recirc Loop to Service at Power

Follow-Up Questions & Answers:

Comments:

Return Recirc Loop to Service at Power

Give this page to the student

Initial Condition(s):

- The plant was operating at 45% power when Recirc Pump B tripped on transfer to Fast Speed.
- Electricians corrected the problem with CB-5B that resulted in the Control Power Fuse blowing.
- Recirc Pump 'A' is operating in Fast Speed.
- Seal Purge to Recirc Pump 'B' has been verified at normal pressures.
- Reactor Engineering has verified the plant is operating at < 75% Rod Line and that FCBB is < 1.0.
- Recirc Flow Control Valve is at the MIN ED position.
- Unit 1 Instrument Air Compressor is in lead.
- FCTR has been placed in the SETUP mode.
- Recirc Loop 'A' is operating < 22,300 gpm.
- ALL annunciators associated with the 'B' Hydraulic Power Unit and cooling to Recirc Pump 'B' are clear.
- Chemistry and Radiation Protection have been notified of the Recirc Pump start.
- The Idle Loop Startup Surveillance 06-OP-1B33-V-0005 was completed satisfactorily 1 minute ago.
- Reactor Water level has been raised to 40 inches.
- All Recirc Pump Temperatures are normal.
- Feedwater flow is > 4.5 Mlbm/hr.
- Reactor Dome temperature is >7.4 degrees above Recirc Loop B.

Initiating Cue(s):

- You have been directed to return Recirc Loop B to service.
- Other operators will control other plant parameters.

TRAINING PROGRAM:

OPERATOR TRAINING

TITLE:

Start SSW A & B and supply all loads from Remote Shutdown Panels

☒ New Material ☐ Minor Revision ☐ Major Revision ☐ Cancellation

REASON FOR REVISION: NEW JPM.
THIS DOCUMENT REPLACES: N/A

REVIEW / APPROVAL (Print Name): ☐ TEAR Approval (TEAR #)

Prepared By: _____
**Preparer Date

Ops Review++: _____
Technical Reviewer (e.g., SME, line management) Date

Validated By: _____
Training Representative Date

Approved By: _____
+Discipline Training Supervisor Date

Approval Date:* _____

* Indexing Information
** The requirements of the Training Material Checklist have been met.
+ Indicates that the LP has been reviewed by the Training Supervisor for inclusion of Management Expectations and items referenced on TQJA-201- DD06, Training Material Checklist.
++ Indicates that Operations has reviewed and approved this material for exam use.

FLEET/REGIONAL PROGRAM CONCURRENCE:
☐ Fleet ☐ ENS ☐ ENN ☒ Not Applicable

DATE TRANSMITTED TO RM	INITIAL RECEIPT BY RM (DATE/INITIAL)	RETURNED FOR CORRECTIONS (DATE/INITIAL)	RETURN RECEIPT (DATE/INITIAL)	FINAL ACCEPTANCE BY RM (DATE/INITIALS)

Generic Instructions

1. Standards and cues for valve operation:
   a. MOVs:
      1) "Turn the valve's handswitch on (panel #)(section#, as applicable) in the (clockwise or counter-clockwise) direction and observe that the valve's red light is (energized or de-energized) and its green light is (energized or de-energized)".
   b. Manual valves
      1) "Turn the valve's handwheel (or other manual operating device) in the (clockwise or counter-clockwise) direction until resistance is felt."

2. The Evaluator should indicate simulated analog gauge readings by pointing a pen or equivalent to the intended place on the gauge.

3. Other methods of simulating control, operation and data collection is at the discretion of the Evaluator.

4. It is expected that the candidate shall locate controlled copies of any required procedures and describe how copies of these procedures would be prepared for use in the field. Only at this time should the evaluator give the candidate previously prepared copies of the procedure(s). This entire procedure need only be performed or simulated once during the entire exam. <u>These activities are not required for JPMs conducted in the Simulator</u>.

5. Consideration of electrical safety must be made during the performance of certain tasks involving electrical circuits and circuit breakers. The performer should be aware that working on or near energized equipment requires, at a minimum, wearing 100% cotton clothing and low voltage (Class 0) gloves while removing or securing shock hazards such as chains, jewelry, watches and metal-framed eyeglasses. Operating or racking circuit breakers may require additional PPE. Details can be found in Att. 2 of the Electrical Safety Rulebook and General Operating procedure 04-S-04-2 (Operation of Electrical Circuit Breakers)

6. Obtain Shift Management's permission before opening any control panel or compartment. Avoid placing any tools, flashlights, pointing devices or any part of your body inside the panel or compartment in a manner that could disturb the operation of any component within or potentially result in an electric shock).

7. Use of lasers as a pointing tool requires Engineering's prior approval of the specific tool for safe use in the Control area. (specifically, the laser's emissions must be verified as not interfering with any component's intended operation or function).

8. During activities within the CAA, consideration must be given to area dose rates. When in a posted Radiation Area, check your EAD for dose rates and minimize time spent in the area. Entry into High Radiation Areas or Contamination Areas is prohibited.

Under no circumstances is any candidate allowed to operate any equipment outside the simulator without the permission of the Evaluator and Shift Management.

C61 Task 9: Start SSW A & B and supply all loads from Remote Shutdown Panels

Setting: Plant (Outside CAA)

Type:	RO
Task:	CRO-C61-009
K&A:	295016 Generic 2.1.30 – 3.9/3.4 400000 A4.01 3.1/3.0
Safety Function:	7/8
Time Required:	10 minutes
Time Critical:	No
Faulted:	No
Performance:	Actual
Reference(s):	05-1-02-II-1
Handout(s):	05-1-02-II-1
# Manipulations:	14
# Critical Steps:	14
Group:	1

Plant / Low Power / Emergency – Abnormal Operations

Simulator Setups:

- N/A

Safety Concerns:

- None

Initial Condition(s):

- The Control Room has been abandoned due to toxic gas.
- The Reactor has been scrammed and RPS reset.
- All control rods are fully inserted.
- Control is being established at the Remote Shutdown Panels.

Initiating Cue(s):

- You have been directed to start Standby Service Water (SSW) A and B and supply loads in accordance with ONEP 05-1-02-II-1 sections 3.8.1a and 3.8.2a.

C61 Task 9: Start SSW A & B and supply all loads from Remote Shutdown Panels

Notes

1. All controls will be from panels P150 and P151 in the Remote Shutdown Panel Room.

Task Overview:

This task aligns Standby Service Water in operation through all loads from the Remote Shutdown Panels. This action would be taken in the event of Control Room Abandonment for toxic gas, fire, or terrorist control of the Main Control Room.

C61 Task 9: Start SSW A & B and supply all loads from Remote Shutdown Panels

Tasks: critical tasks are underlined, italicized and denoted by (*)

Note: Sequence is critical for critical tasks unless otherwise noted.

May elect to perform SSW A first or B order of systems is NOT critical.

SSW A (Attachment VIII section 3.8.1a)

Panel H22-P150

€ Check open/open P41-F068A, SSW OUTL FM RHR HX A VLV.
Standard: Observes P41-F068A open red light on green light off.
Cue: Red light on Green light off
Notes:

€* *Start P41-C001A, SSW PMP A.*
Standard: Starts SSW Pump A by rotating handswitch on P150 clockwise to START and observing red light on green light off.
Cue: Red light on Green light off
Notes:

€* *Open P41-F001A, SSW PMP DISCH VLV.*
Standard: Opens P41-F001A, SSW PMP DISCH VLV by rotating the key lock switch clockwise on P150 and observing red light on green light off.
Cue: Red light on Green light off
Notes:

€* *Open P41-F014A, SSW INL TO RHR HX A VLV.*

Standard: Opens P41-F014A, SSW INL TO RHR HX A VLV by rotating the handswitch clockwise on P150 and observing red light on green light off.

Cue: Red light on Green light off

Notes: The interlock between P41-F006A and F014A is bypassed at the Remote Shutdown Panels.

€* *Open P41-F005A, SSW LOOP A RTN TO CLG TWR A.*

Standard: Opens P41-F005A, SSW LOOP A RTN TO CLG TWR A by rotating the handswitch clockwise on P150 and observing red light on green light off.

Cue: Red light on Green light off

Notes:

If asked, Cue P41-F006A is Red Light ON Green Light OFF.

€* *Close P41-F006A, SSW LOOP A RECIRC VLV.*

Standard: Closes P41-F006A, SSW LOOP A RECIRC VLV by rotating the handswitch counter-clockwise on P150 and observing green light on red light off.

Cue: Green light on Red light off

Notes: Order NOT Critical. The interlock between P41-F006A and F014A is bypassed at the Remote Shutdown Panels.

€* *Start P41-C003A, SSW CLG TWR FAN A.*

Standard: Starts P41-C003A, SSW CLG TWR FAN A by rotating the handswitch clockwise on P150 and observing red light on green light off.

Cue: Red light on Green light off

Notes: Order for Fan A and Fan B is NOT critical.

€* *Start P41-C003B, SSW CLG TWR FAN B.*

Standard: Starts P41-C003B, SSW CLG TWR FAN B by rotating the handswitch clockwise on P150 and observing red light on green light off.

Cue: Red light on Green light off

Notes: Order for Fan A and Fan B is NOT critical.

May elect to perform SSW A first or B order of systems is NOT critical.

SSW B (Attachment IX section 3.8.2a)

Panel H22-P151

€ Check open/open P41-F068B, SSW OUTL FM RHR HX B VLV.
Standard: Observes P41-F068B open red light on green light off.
Cue: Red light on Green light off
Notes:

€* *Start P41-C001B, SSW PMP B.*
Standard: Starts SSW Pump B by rotating handswitch on P151 clockwise to START and observing red light on green light off.
Cue: Red light on Green light off
Notes:

€* *Open P41-F001B, SSW PMP DISCH VLV.*
Standard: Opens P41-F001B, SSW PMP DISCH VLV by rotating the key lock switch clockwise on P151 and observing red light on green light off.
Cue: Red light on Green light off
Notes:

€* *Open P41-F014B, SSW INL TO RHR HX B VLV.*

Standard: Opens P41-F014B, SSW INL TO RHR HX B VLV by rotating the handswitch clockwise on P151 and observing red light on green light off.

Cue: Red light on Green light off

Notes: The interlock between P41-F006B and F014B is bypassed at the Remote Shutdown Panels.

€* *Open P41-F005B, SSW LOOP B RTN TO CLG TWR B.*

Standard: Opens P41-F005B, SSW LOOP B RTN TO CLG TWR B by rotating the handswitch clockwise on P151 and observing red light on green light off.

Cue: Red light on Green light off

Notes:

If asked, Cue P41-F006B is Red Light ON Green Light OFF.

€* *Close P41-F006B, SSW LOOP B RECIRC VLV.*

Standard: Closes P41-F006B, SSW LOOP B RECIRC VLV by rotating the handswitch counter-clockwise on P151 and observing green light on red light off.

Cue: Green light on Red light off

Notes: Order NOT Critical. The interlock between P41-F006B and F014B is bypassed at the Remote Shutdown Panels.

€* *Start P41-C003C, SSW CLG TWR FAN C.*

Standard: Starts P41-C003C, SSW CLG TWR FAN C by rotating the handswitch clockwise on P151 and observing red light on green light off.

Cue: Red light on Green light off

Notes: Order for Fan C and Fan D is NOT critical.

€* *Start P41-C003D, SSW CLG TWR FAN D.*

Standard: Starts P41-C003D, SSW CLG TWR FAN D by rotating the handswitch clockwise on P151 and observing red light on green light off.

Cue: Red light on Green light off

Notes: Order for Fan C and Fan D is NOT critical.

Task Standard(s):

SSW A & B are operating through the RHR Heat Exchangers with the Cooling Tower fans operating from the Remote Shutdown Panels H22-P150 and P151.

Name: _____Time Start: _____Time Stop: _____

C61 Task 9: Start SSW A & B and supply all loads from Remote Shutdown Panels

Follow-Up Questions & Answers:

Comments:

Start SSW A & B and supply all loads from Remote Shutdown Panels

Give this page to the student

Initial Condition(s):

- The Control Room has been abandoned due to toxic gas.
- The Reactor has been scrammed and RPS reset.
- All control rods are fully inserted.
- Control is being established at the Remote Shutdown Panels.

Initiating Cue(s):

- You have been directed to start Standby Service Water (SSW) A and B and supply loads in accordance with ONEP 05-1-02-II-1 sections 3.8.1a and 3.8.2a.

TRAINING PROGRAM:

OPERATOR TRAINING

TITLE:

Startup Shutdown Cooling B

☐ New Material ☐ Minor Revision ☒ Major Revision ☐ Cancellation

REASON FOR REVISION: Update JPM for NRC
THIS DOCUMENT REPLACES: N/A

REVIEW / APPROVAL (Print Name): ☐ TEAR Approval (TEAR #)

Prepared By: _____
**Preparer Date

Ops Review++: _____
Technical Reviewer (e.g., SME, line management) Date

Validated By: _____
Training Representative Date

Approved By: _____
+Discipline Training Supervisor Date

Approval Date:* _____

* Indexing Information
** The requirements of the Training Material Checklist have been met.
+ Indicates that the LP has been reviewed by the Training Supervisor for inclusion of Management Expectations and items referenced on TQJA-201- DD06, Training Material Checklist.
++ Indicates that Operations has reviewed and approved this material for exam use.

FLEET/REGIONAL PROGRAM CONCURRENCE:

☐ Fleet ☐ ENS ☐ ENN ☒ Not Applicable

DATE TRANSMITTED	INITIAL RECEIPT BY RM	RETURNED FOR CORRECTIONS	RETURN RECEIPT	FINAL ACCEPTANCE BY RM

TO RM	(DATE/INITIAL)	(DATE/INITIAL)	(DATE/INITIAL)	(DATE/INITIALS)

Generic Instructions

1. Standards and cues for valve operation:
   a. MOVs:
      1) "Turn the valve's handswitch on (panel #)(section#, as applicable) in the (clockwise or counter-clockwise) direction and observe that the valve's red light is (energized or de-energized) and its green light is (energized or de-energized)".
   b. Manual valves
      1) "Turn the valve's handwheel (or other manual operating device) in the (clockwise or counter-clockwise) direction until resistance is felt."

2. The Evaluator should indicate simulated analog gauge readings by pointing a pen or equivalent to the intended place on the gauge.

3. Other methods of simulating control, operation and data collection is at the discretion of the Evaluator.

4. It is expected that the candidate shall locate controlled copies of any required procedures and describe how copies of these procedures would be prepared for use in the field. Only at this time should the evaluator give the candidate previously prepared copies of the procedure(s). This entire procedure need only be performed or simulated once during the entire exam. <u>These activities are not required for JPMs conducted in the Simulator</u>.

5. Consideration of electrical safety must be made during the performance of certain tasks involving electrical circuits and circuit breakers. The performer should be aware that working on or near energized equipment requires, at a minimum, wearing 100% cotton clothing and low voltage (Class 0) gloves while removing or securing shock hazards such as chains, jewelry, watches and metal-framed eyeglasses. Operating or racking circuit breakers may require additional PPE. Details can be found in Att. 2 of the Electrical Safety Rulebook and General Operating procedure 04-S-04-2 (Operation of Electrical Circuit Breakers)

6. Obtain Shift Management's permission before opening any control panel or compartment. Avoid placing any tools, flashlights, pointing devices or any part of your body inside the panel or compartment in a manner that could disturb the operation of any component within or potentially result in an electric shock).

7. Use of lasers as a pointing tool requires Engineering's prior approval of the specific tool for safe use in the Control area. (specifically, the laser's emissions must be verified as not interfering with any component's intended operation or function).

8. During activities within the CAA, consideration must be given to area dose rates. When in a posted Radiation Area, check your EAD for dose rates and minimize time spent in the area. Entry into High Radiation Areas or Contamination Areas is prohibited.

Under no circumstances is any candidate allowed to operate any equipment outside the simulator without the permission of the Evaluator and Shift Management.

E12 Task 1: Startup Shutdown Cooling B

Setting: Simulator

Type:	RO
Task:	CRO-E12-008
K&A:	205000 A4.01 – 3.7/3.7; A4.02 – 3.6/3.5; A4.03 – 3.6/3.5
Safety Function:	4
Time Required:	15 minutes
Time Critical:	No
Faulted:	No
Performance:	Actual
Reference(s):	04-1-01-E12-2 sect 4.2.2c
Handout(s):	None
# Manipulations:	10
# Critical Steps:	8
Group:	1

Simulator / Low Power

Simulator Setups:

- IC 1 Secure RHR A SDC and SSW A
- SSW B in operation to the RHR B heat exchangers
- B21-F065A; E12- F004B; F008; F064B; F009; F053B and F006B are closed.
- B21-F065B is open.

Safety Concerns:

- None

Initial Condition(s):

- RHR A was previously in service for Shutdown Cooling but was secured.
- RHR B has been flushed, warmed up and is ready to be placed in Shutdown Cooling.
- SSW B is in operation.
- ADHR is not in operation.

Initiating Cue(s):

- You have been directed to place RHR B in Shutdown Cooling through E12-F053B, starting at Step 4.2.2c(12) of SOI 04-1-01-E12-2. Establish RHR flow

with E12-F003B full open and E12-F048B full closed to maximize RPV cooldown rate.

E12 Task 1: Startup Shutdown Cooling B

Notes

1. All controls will be from panels P601 and P680 in the Main Control Room.
2. Unless otherwise indicated, all valves are in the "E12" system.

Task Overview:

This task places the RHR system in service for Shutdown Cooling using the normal (E12-F053B) flowpath. This is a Tech Spec Decay Heat Removal method. Throttling of RHR Shutdown Cooling flow caused damage to RHR Instrumentation piping during RF12.

E12 Task 1: Startup Shutdown Cooling B

Tasks: critical tasks are underlined, italicized and denoted by (*)

Note: Sequence is critical for critical tasks unless otherwise noted.

€ Place the RHR B MOV TEST switch in TEST

Standard: Turns the RHR B MOV TEST switch clockwise until it snaps in the TEST position

Cue: As Indicated

Notes: Indication is on P601-17B. Will receive MOVS IN TEST Status Light and RHR B OOSVC annunciator.

€ Open or check open the following valves:

- € E12-F010 INLET TO SHUTDOWN COOLING
- € ** E12-F008 RHR SHUTDN CLG OTBD SUCT VLV*
- € ** E12-F009 RHR SHUTDN CLG INBD SUCT VLV*
- € ** E12-F006B RHR B PMP SUCT FM SHUTDN CLG*
- € E12-F047B RHR HX INL VLV
- € E12-F048B RHR HX BYP VLV

Standard: Checks open E12-F010; F047B on P601 by observing their red light on and their green light off. E12-F048B has a valve position indication meter on P601-17B to indicate 100%. OPENS E12-F008; F009 and F006B by turning their handswitches on P601 clockwise in the OPEN direction and observing its red light is on and its green light is off.

Cue: As Indicated

Notes: Valves are controlled from P601-17C

€ * *Close E12-F003B RHR HX B OUTL VLV-*

Standard: Closes E12-F003B by turning its handswitch on P601 counter - clockwise in the CLOSE direction and holding while observing position indication meter on P601-17B lower to indicate 0%.

Cue: As Indicated

Notes: Valve is controlled from P601-17C

€ **Close or check closed B21-F065B FW INL SHUTOFF VLV*

Standard: Checks closed B21-F065B on P680 by observing its green light on and its red light off.

Cue: As Indicated

Notes: Valve indication is located on P680-2C

NOTE: The Candidate should identify OPTION 1 is the method to be used per NOTE at step 4.2.2c(14).

NOTE: The following two steps have to be performed within 8 seconds to prevent causing E12-F064B from opening for minimum flow which would drain the RPV to the Suppression Pool.

€ **Start RHR PMP B*

Standard: Starts RHR pump B by turning its handswitch on P601 clockwise in the START direction and observing its red light is on and its green light is off.

Cue: As Indicated

Notes: Pump handswitch is on P601-17C

€ * *Open E12-F053B RHR B SHUTDN CLNG RTN TO FW*

Standard: Opens E12-F053B by turning its handswitch on P601 clockwise in the OPEN direction and holding it until its red light is on and its green light is off

Cue: As Indicated

Notes:

€ * *Slowly opens E12-F003B RHR HX B OUTL VLV*

Standard: Slowly opens E12-F003B by turning its handswitch on P601 clockwise to jog the valve in the OPEN direction and while observing the valve position indication on P601-17B rise to indicate 100%.

Cue: As Indicated

Notes: Candidate should observe RHR Flow on E12-R603B and temperatures on E12-R601.

NOTE: Due to current RPV temperature 100 degree F / Hr cooldown rate cannot be exceeded.

€ * *Slowly throttle E12-F048B RHR HX BYP VLV closed*

Standard: Throttles E12-F048B closed by turning its handswitch on P601 counter - clockwise in the CLOSE direction.

Cue: As indicated

Notes: Indication on E12-R603B panel P601-17B

Task Standard(s):

Shutdown Cooling B is started IAW SOI 04-1-01-E12-1, with E12-F003B full open and E12-F048B full closed.

Name: _____Time Start: _____Time Stop: _____

E12 Task 1: Startup Shutdown Cooling B

Follow-Up Questions & Answers:

Comments:

Startup Shutdown Cooling B

Give this page to the student

Initial Condition(s):

- RHR A was previously in service for Shutdown Cooling but was secured.
- RHR B has been flushed, warmed up and is ready to be placed in Shutdown Cooling.
- SSW B is in operation.
- ADHR is not in operation.

Initiating Cue(s):

- You have been directed to place RHR B in Shutdown Cooling through E12-F053B, starting at Step 4.2.2c(12) of SOI 04-1-01-E12-2. Establish RHR flow with E12-F003B full open and E12-F048B full closed to maximize RPV cooldown rate.

TRAINING PROGRAM:

OPERATOR TRAINING

TITLE:

Raise Suppression Pool Level using RCIC/HPCS

☒ New Material ☐ Minor Revision ☐ Major Revision ☐ Cancellation

REASON FOR REVISION: New JPM
THIS DOCUMENT REPLACES: N/A

REVIEW / APPROVAL (Print Name): ☐ TEAR Approval (TEAR #)

Prepared By: _____
**Preparer Date

Ops Review++: _____
Technical Reviewer (e.g., SME, line management) Date

Validated By: _____
Training Representative Date

Approved By: _____
+Discipline Training Supervisor Date

Approval Date:* _____

* Indexing Information
** The requirements of the Training Material Checklist have been met.
+ Indicates that the LP has been reviewed by the Training Supervisor for inclusion of Management Expectations and items referenced on TQJA-201- DD06, Training Material Checklist.
++ Indicates that Operations has reviewed and approved this material for exam use.

FLEET/REGIONAL PROGRAM CONCURRENCE:

☐ Fleet ☐ ENS ☐ ENN ☒ Not Applicable

DATE TRANSMITTED	INITIAL RECEIPT BY RM	RETURNED FOR CORRECTIONS	RETURN RECEIPT	FINAL ACCEPTANCE BY RM

TO RM	(DATE/INITIAL)	(DATE/INITIAL)	(DATE/INITIAL)	(DATE/INITIALS)

Generic Instructions

1. Standards and cues for valve operation:
   a. MOVs:
      1) "Turn the valve's handswitch on (panel #)(section#, as applicable) in the (clockwise or counter-clockwise) direction and observe that the valve's red light is (energized or de-energized) and its green light is (energized or de-energized)".
   b. Manual valves
      1) "Turn the valve's handwheel (or other manual operating device) in the (clockwise or counter-clockwise) direction until resistance is felt."

2. The Evaluator should indicate simulated analog gauge readings by pointing a pen or equivalent to the intended place on the gauge.

3. Other methods of simulating control, operation and data collection is at the discretion of the Evaluator.

4. It is expected that the candidate shall locate controlled copies of any required procedures and describe how copies of these procedures would be prepared for use in the field. Only at this time should the evaluator give the candidate previously prepared copies of the procedure(s). This entire procedure need only be performed or simulated once during the entire exam. <u>These activities are not required for JPMs conducted in the Simulator</u>.

5. Consideration of electrical safety must be made during the performance of certain tasks involving electrical circuits and circuit breakers. The performer should be aware that working on or near energized equipment requires, at a minimum, wearing 100% cotton clothing and low voltage (Class 0) gloves while removing or securing shock hazards such as chains, jewelry, watches and metal-framed eyeglasses. Operating or racking circuit breakers may require additional PPE. Details can be found in Att. 2 of the Electrical Safety Rulebook and General Operating procedure 04-S-04-2 (Operation of Electrical Circuit Breakers)

6. Obtain Shift Management's permission before opening any control panel or compartment. Avoid placing any tools, flashlights, pointing devices or any part of your body inside the panel or compartment in a manner that could disturb the operation of any component within or potentially result in an electric shock).

7. Use of lasers as a pointing tool requires Engineering's prior approval of the specific tool for safe use in the Control area. (specifically, the laser's emissions must be verified as not interfering with any component's intended operation or function).

8. During activities within the CAA, consideration must be given to area dose rates. When in a posted Radiation Area, check your EAD for dose rates and minimize time spent in the area. Entry into High Radiation Areas or Contamination Areas is prohibited.

Under no circumstances is any candidate allowed to operate any equipment outside the simulator without the permission of the Evaluator and Shift Management.

E22 Task 15: Raise Suppression Pool Level using RCIC/HPCS

Setting: Simulator

Type:	RO
Task:	CRO-E22-011; CRO-E51-016
K&A:	223001 A2.11: 3.6/3.8; K1.13: 3.4/3.5; K1.14: 3.3/3.6 209002 A1.05: 3.3/3.4; K1.01: 3.4/3.4; K1.02: 3.5/3.5; A4.01: 3.7/3.7; A4.02: 3.6/3.6; A4.14: 3.0/3.0 217000 A4.03: 3.4/3.3 295030 EA1.02: 3.4/3.5; EA1.03: 3.4/3.4
Safety Function:	5
Time Required:	10 minutes
Time Critical:	No
Faulted:	**YES**
Performance:	Actual
Reference(s):	04-1-01-E51-1; 04-1-01-E22-1; 05-1-01-EP-3
Handout(s):	04-1-01-E51-1; 04-1-01-E22-1
# Manipulations:	8 or 9
# Critical Steps:	7 or 8
Group:	1/2

Simulator

Simulator Setups:

- ANY IC
- Lower Suppression Pool Water Level to 18.13 feet.
- Defeat Suppression Pool Makeup A & B
- Insert Malfuction **e51187g** on RCIC Minimum Flow Valve Closed (loss of power on stroke)

Safety Concerns:

- None

E22 Task 15: Raise Suppression Pool Level using RCIC/HPCS

Initial Condition(s):

- The plant is operating at 100% power.
- Suppression Pool Water Level is low due to a leak in RHR C Pump Room.
- Standby Service Water A is operating.
- Emergency Operating Procedure 3 has been entered.
- Suppression Pool Makeup is out of service.

Initiating Cue(s):

- You have been directed to perform a controlled startup of RCIC and raise Suppression Pool water level to the normal band using RCIC.

Notes

1. All controls will be from panels P601 and P870 in the Main Control Room.

Task Overview:

This task raises Suppression Pool Water Level using methods allowed per 05-1-01-EOP-3 using RCIC / HPCS.

E22 Task 15: Raise Suppression Pool Level using RCIC/HPCS

Tasks: critical tasks are underlined, italicized and denoted by (*)

Note : The sequence for the following steps is critical.

€ Start RCIC RM FAN COIL UNIT.
Standard: Starts RCIC RM Fan Coil Unit by placing RCIC RM FAN COIL UNIT handswitch to the clockwise direction on P870 and observes red light on green light off.
Cue: As Indicated
Notes: Indication is on P870-1C.

€ Close E51-F268 PRESS LOCK ISOL FOR F013
Standard: Contacts Aux Bldg Operator to close E51-F268 PRESS LOCK ISOL FOR F013.
Cue: E51-F268 is closed.
Notes: Field operation.

€ ** Shift RCIC FLO CONT to MANUAL.*
Standard: Shifts RCIC FLO CONT to MANUAL by placing slide switch on controller to left for controller on P601.
Cue: As Indicated
Notes: Indication is on P601-21B.

€ ** Reduce RCIC FLO CONT output to minimum.*
Standard: Reduces RCIC FLO CONT to output to minimum by depressing left pushbutton on controller until horizontal meter reads zero on P601.
Cue: As Indicated
Notes: Indication is on P601-21B.

€ * *Open E51-F046 RCIC WTR TO TURB LUBE OIL CLR*

Standard: Opens E51-F046 by turning its handswitch on P601 clockwise in the OPEN direction and holding while observing red light on and green light off.

Cue: As Indicated

Notes: Valve is controlled from P601-21C

€ ** Start Turbine Gland Seal Compressor using RCIC GL SEAL COMPR handswitch.*

Standard: Starts RCIC Glans Seal Compressor by turning handswitch clockwise on P601 and observing red light on green light off.

Cue: As Indicated

Notes: Indication is on P601-21C.

€ * *Open E51-F095 RCIC STM SPLY BYP VLV*

Standard: Opens E51-F095 by turning its handswitch on P601 clockwise in the OPEN direction and holding while observing red light on and green light off.

Cue: As Indicated

Notes: Valve is controlled from P601-21C

NOTE: As soon as the candidate recognizes the failure of the Minimum Flow Valve, the candidate may proceed to secure the RCIC Turbine. If this is the case the following three steps will be N/A.

€ After 6 seconds open E51-F045 RCIC STM SPLY TO RCIC TURB

Standard: After approximately 6 seconds E51-F045 by turning its handswitch on P601 clockwise in the OPEN direction and holding while observing red light on and green light off.

Cue: As Indicated

Notes: Valve is controlled from P601-21C

NOTE: May not be performed is RCIC is tripped.

€ Raise RCIC Turbine speed to greater than 2000 rpm by opening on RCIC FLO CONT output.
Standard: Raises RCIC Turbine speed to > 2000 rpm using RCIC FLO CONT by depressing the OPEN pushbutton and observing E51-R605 on section 21B of P601.
Cue: As Indicated
Notes: Indication is on P601-21B.

NOTE: May not be performed if RCIC is tripped.
NOTE: The following steps may be performed in any order.

€ Open or check open E51-F019 RCIC MIN FLO to SUPP POOL
Standard: Opens E51-F019 by turning its handswitch on P601 clockwise in the OPEN direction and holding while observing red light on and green light off.
Cue: As Indicated
Notes: Candidate should observe the valve loses power and fails to open.
Valve is controlled from P601-21C

CUE: If asked by the candidate to check the valve circuit breaker, report as the Roving Operator circuit breaker 72-11A56 is in the TRIP FREE condition and there is a strange odor in the area.

Candidate should inform the Control Room Supervisor (CRS) of the problem. IF ASKED, CUE the candidate to secure the RCIC Turbine and raise Suppression Pool Level via the HPCS gravity flow. Once the RCIC Turbine is tripped another operator will complete the RCIC shutdown.

€ Close or check closed E51-F022 RCIC INBD TEST RTN TO CST
Standard: Observes indication for E51-F022 as green light on red light off on P601.
Cue: As Indicated
Notes: Valve is controlled from P601-21C
NOTE: May not be performed.

€ Close or check closed E51-F059 RCIC OUTBD TEST RTN TO CST
Standard: Observes indication for E51-F059 as green light on red light off on P601.
Cue: As Indicated
Notes: Valve is controlled from P601-21C
NOTE: May not be performed.

Secure RCIC

€ Observe RCIC INIT RESET pushbutton white light is out.
Standard: Observes RCIC INIT RESET pushbutton white light is out.
Cue: As Indicated.
Notes: Indication is on P601 section 21B.
NOTE: May not be performed. This is acceptable.

€ Reduce RCIC flow to <100 gpm using RCIC FLO CONT.
Standard: Reduces RCIC flow using RCIC FLO CONT.
Cue: As Indicated
Notes: Candidate may not perform, this step since there is no RCIC flow. This is acceptable.

€ Close E51-F013 RCIC INJ SHUTOFF VLV.
Standard: Observes indication for E51-F013 closed as green light on red light off on P601.
Cue: As Indicated
Notes: Candidate may not perform, the valve was never opened. This is acceptable.

RCIC may be secured by option 1 or 2 either is acceptable.
Option 1 to secure RCIC

€ * *TRIP RCIC Turbine*
Standard: Trips the RCIC Turbine using the RCIC TURBINE TRIP pushbutton on P601 and observes green light on and red light off for the RCIC Trip Throttle valve.
Cue: As Indicated
Notes: Controlled from P601-21C

Option 2 to secure RCIC

€ * *Close E51-F095 RCIC STM SPLY BYP VLV*

Standard: Closes E51-F095 by turning its handswitch on P601 counter-clockwise in the CLOSE direction and holding while observing green light on and red light off.

Cue: As Indicated

Notes: Valve is controlled from P601-21C

€ * *Close E51-F045 RCIC STM SPLY TO RCIC TURB*

Standard: Closes E51-F045 by turning its handswitch on P601 counter-clockwise in the CLOSE direction and holding while observing green light on and red light off.

Cue: As Indicated

Notes: Valve is controlled from P601-21C

ANOTHER OPERATOR WILL PICKUP THE RCIC OPERATIONS FROM HERE.

May need to cue the candidate to another operator securing RCIC and as Control Room Supervisor direct candidate to raise Suppression Pool Level via HPCS gravity flow.

HPCS Gravity Flow

€ * *Throttle open E22-F023HPCS TEST RTN TO SUPP POOL*

Standard: Opens E22-F023 by turning its handswitch on P601 clockwise in the OPEN direction and holding while observing red light on and green light off.

Cue: As Indicated

Notes: Valve is controlled from P601-16C

€ Observes CST Level lowering and Suppression Pool Level rising on P870

Standard: Checks CST Level and Suppression Pool Level on P870.

Cue: As Indicated

Notes: The candidate may use any of thefollowing indications:

E30-LR-R600A P870 4B Suppression Pool Level
E30-LR-R600B P870 10B Suppression Pool Level
P11-LI-R601 P870 5B CST Level
SPDS for Suppression Pool Level

When Suppression Pool Level has been raised to the satisfaction of the Evaluator, the Evaluator may terminate the JPM.

Task Standard(s):

Suppression Pool level is rising using HPCS gravity flow.

Name: _____Time Start: _____Time Stop: _____

E22 Task 15: Raise Suppression Pool Level using RCIC/HPCS

Follow-Up Questions & Answers:

Comments:

Raise Suppression Pool Level using RCIC

Give this page to the student

Initial Condition(s):

- The plant is operating at 100% power.
- Suppression Pool Water Level is low due to a leak in RHR C Pump Room.
- Standby Service Water A is operating.
- Emergency Operating Procedure 3 has been entered.
- Suppression Pool Makeup is out of service.

Initiating Cue(s):

- You have been directed to perform a controlled startup of RCIC and raise Suppression Pool water level to the normal band using RCIC.

TRAINING PROGRAM:

OPERATOR TRAINING

TITLE:

Align RWCU for Vessel Level Control

☒ New Material ☐ Minor Revision ☐ Major Revision ☐ Cancellation

REASON FOR REVISION: NEW JPM; Modified from GJPM-RO-G3301.
THIS DOCUMENT REPLACES: N/A

REVIEW / APPROVAL (Print Name): ☐ TEAR Approval (TEAR #)

Prepared By: _____
**Preparer Date

Ops Review++: _____
Technical Reviewer (e.g., SME, line management) Date

Validated By: _____
Training Representative Date

Approved By: _____
+Discipline Training Supervisor Date

Approval Date:* _____

* Indexing Information
** The requirements of the Training Material Checklist have been met.
+ Indicates that the LP has been reviewed by the Training Supervisor for inclusion of Management Expectations and items referenced on TQJA-201- DD06, Training Material Checklist.
++ Indicates that Operations has reviewed and approved this material for exam use.

FLEET/REGIONAL PROGRAM CONCURRENCE:

☐ Fleet ☐ ENS ☐ ENN ☒ Not Applicable

DATE TRANSMITTED	INITIAL RECEIPT BY RM	RETURNED FOR CORRECTIONS	RETURN RECEIPT	FINAL ACCEPTANCE BY RM

TO RM	(DATE/INITIAL)	(DATE/INITIAL)	(DATE/INITIAL)	(DATE/INITIALS)

Generic Instructions

1. Standards and cues for valve operation:
   a. MOVs:
      1) "Turn the valve's handswitch on (panel #)(section#, as applicable) in the (clockwise or counter-clockwise) direction and observe that the valve's red light is (energized or de-energized) and its green light is (energized or de-energized)".
   b. Manual valves
      1) "Turn the valve's handwheel (or other manual operating device) in the (clockwise or counter-clockwise) direction until resistance is felt."

2. The Evaluator should indicate simulated analog gauge readings by pointing a pen or equivalent to the intended place on the gauge.

3. Other methods of simulating control, operation and data collection is at the discretion of the Evaluator.

4. It is expected that the candidate shall locate controlled copies of any required procedures and describe how copies of these procedures would be prepared for use in the field. Only at this time should the evaluator give the candidate previously prepared copies of the procedure(s). This entire procedure need only be performed or simulated once during the entire exam. <u>These activities are not required for JPMs conducted in the Simulator</u>.

5. Consideration of electrical safety must be made during the performance of certain tasks involving electrical circuits and circuit breakers. The performer should be aware that working on or near energized equipment requires, at a minimum, wearing 100% cotton clothing and low voltage (Class 0) gloves while removing or securing shock hazards such as chains, jewelry, watches and metal-framed eyeglasses. Operating or racking circuit breakers may require additional PPE. Details can be found in Att. 2 of the Electrical Safety Rulebook and General Operating procedure 04-S-04-2 (Operation of Electrical Circuit Breakers)

6. Obtain Shift Management's permission before opening any control panel or compartment. Avoid placing any tools, flashlights, pointing devices or any part of your body inside the panel or compartment in a manner that could disturb the operation of any component within or potentially result in an electric shock).

7. Use of lasers as a pointing tool requires Engineering's prior approval of the specific tool for safe use in the Control area. (specifically, the laser's emissions must be verified as not interfering with any component's intended operation or function).

8. During activities within the CAA, consideration must be given to area dose rates. When in a posted Radiation Area, check your EAD for dose rates and minimize time spent in the area. Entry into High Radiation Areas or Contamination Areas is prohibited.

Under no circumstances is any candidate allowed to operate any equipment outside the simulator without the permission of the Evaluator and Shift Management.

G33 Task 11: Align RWCU for Vessel Level Control

Setting: Simulator

Type:	RO
Task:	CRO-G33/36-009
K&A:	204000 A1.01 – 3.1/3.2; A1.04 – 2.8/2.8; A4.02 – 2.9/2.9 A4.06- 3.0/2.9 295008 AA1.02 – 3.3/3.3; AA2.03 – 2.9/3.0
Safety Function:	2
Time Required:	15 minutes
Time Critical:	No
Faulted:	**YES**
Performance:	Actual
Reference(s):	04-1-01-G33-1
Handout(s):	04-1-01-G33-1
# Manipulations:	11
# Critical Steps:	7
Group:	2

Simulator / Low Power

Simulator Setups:

- IC
- Ensure RWCU is operatingin Pre-Pump mode.
- Ensure G33-F033 contrtoller G33-R606 is set at 0%.
- Insert malfunction
    - di_1G33-M612 P680/11C G33-F046 CLOSE
    - di_1G33-M625 P680/11C G33-F041 CLOSE

Safety Concerns:

- None

G33 Task 11: Align RWCU for Vessel Level Control

Initial Condition(s):

- The plant is in mode 2 with coolant temperature approximately _140_ degrees F.
- Plant startup is in progress.
- Component Cooling Water is in operation.
- RWCU is in Pre-Pump mode of operation with two pumps and two filters in service.
- Radiation Protection has been notified.

Initiating Cue(s):

- You have been directed to align RWCU for blowdown to the Main Condenser at 60 gpm.
- Other operators will control other plant parameters.

G33 Task 11: Align RWCU for Vessel Level Control

Notes

1. All controls will be from panels P680 and P870 in the Main Control Room.

Task Overview:

This task aligns Reactor Water Cleanup for reactor vessel level control using blowdown to the Main Condenser/Radwaste. This action is performed during reactor startup/heatup to control reactor water level.

G33 Task 11: Align RWCU for Vessel Level Control

Tasks: critical tasks are underlined, italicized and denoted by (*)

Note: Sequence is critical for critical tasks unless otherwise noted.

€* *Adjust G33-F033, RWCU SYS BLWDN F/D CONT VLV to 10 % open.*
Standard: Adjusts G33-F033 to 10% open on controller G33-R606 by placing the controller in MANUAL and opening to indicated 10% on the horizontal meter.
Cue: As Indicated
Notes: Indications are on P680 section 11D.

€ Place NSSSS INBD MOV TEST switch to TEST.
Standard: On P601 section 18B places the keylock switch for NSSSS INBD MOV TEST to TEST clockwise and observes annunciator "Rx Div 2 Isol Sys OOSVC" is received P601-19A-G3.
Cue: As Indicated
Notes:

€* *Open or check open G33-F028, RWCU BLWDN CTMT INBD ISOL.*
Standard: Opens G33-F028, RWCU BLWDN CTMT INBD ISOL by rotating the key lock switch clockwise on P680 and observing red light on green light off.
Cue: As Indicated
Notes: Pushbutton is located on P680 section 11C.

€ Place NSSSS OUTBD MOV TEST switch to TEST.
Standard: On P601 section 19B places the keylock switch for NSSSS OUTBD MOV TEST to TEST clockwise and observes annunciator "Rx Div 1 Isol Sys OOSVC" is received P601-19A-H3.
Cue: As Indicated
Notes:

€* *Open or check open G33-F034, RWCU BLWDN CTMT OUTBD ISOL.*
Standard: Opens G33-F034, RWCU BLWDN CTMT OUTBD ISOL by rotating the key lock switch clockwise on P680 and observing red light on green light off.
Cue: As Indicated
Notes: Pushbutton is located on P680 section 11C.

€* *Open or check open G33-F046, RWCU BLWDN TO MN CNDSR.*
Standard: Opens G33-F046, RWCU BLWDN TO MN CNDSR by depressing the OPEN pushbutton on P680 and observing red light on green light off.
Cue: As Indicated
Notes: Pushbutton is located on P680 section 11C.

G33-F046 will not change position when the pushbutton is depressed.

Candidate should inform the Control Room Supervisor of this malfunction. AS CRS, CUE candidate to attempt to use the BYPASS Valve G33-F041.

€* *Open or check open G33-F041, RWCU BLWDN TO MN CNDSR BYP.*

Standard: Opens G33-F041, RWCU BLWDN TO MN CNDSR BYP by depressing the OPEN pushbutton on P680 and observing red light on green light off.

Cue: As Indicated

Notes: Pushbutton is located on P680 section 11C.

G33-F041 will not change position when the pushbutton is depressed.

Candidate should inform the Control Room Supervisor of this malfunction. AS CRS, CUE candidate to change the flowpath to blowdown to Radwaste. Maintenance will be contacted to investigate the problems with G33-F041 and F046.

€* *Open G33-F035, RWCU BLWDN TO RADWST.*

Standard: Opens G33-F035, RWCU BLWDN TO RADWST by depressing the OPEN pushbutton on P680 and observing red light on green light off.

Cue: As Indicated

Notes: Pushbutton is located on P680 section 11C.

€* *Adjust G33-F033, RWCU SYS BLWDN F/D CONT VLV to attain 60 gpm flow as indicated on G33-FI-R602. Opening G33-F031, RWCU BLWDN ORF BYP VLV to obtain additional flow as necessary.*

Standard: Adjusts G33-F033, RWCU SYS BLWDN F/D CONT VLV to attain 60 gpm flow as indicated on G33-FI-R602. Opening G33-F031, RWCU BLWDN ORF BYP VLV to obtain additional flow as necessary

Cue: As Indicated

Notes: Indications are on P680 section 11D.

Candidate may request permission to throttle G33-F042 closed to obtain desired flow. If so, CUE candidate to throttle G33-F042. Candidate may elect to open G33-F031 to obtain additional flow. Either of these methods are acceptable.

€ Place NSSSS OUTBD MOV TEST switch to NORM.
Standard: On P601 section 19B places the keylock switch for NSSSS OUTBD MOV TEST to NORM counter-clockwise and observes annunciator "Rx Div 1 Isol Sys OOSVC" clears P601-19A-H3.
Cue: As Indicated
Notes:

NOTE: Order between INBD and OUTBD is not essential.

€ Place NSSSS INBD MOV TEST switch to NORM.
Standard: On P601 section 19B places the keylock switch for NSSSS INBD MOV TEST to NORM counter-clockwise and observes annunciator "Rx Div 2 Isol Sys OOSVC" clears P601-19A-G3.
Cue: As Indicated
Notes:

NOTE: Order between INBD and OUTBD is not essential.

Candidate may elect to leave MOV Test Switches in TEST. This is acceptable.

Task Standard(s):

RWCU is aligned to blow down the reactor to Radwaste at 60 gpm as indicated on G33-R602.

Name: _____Time Start: _____Time Stop: _____

G33 Task 11: Align RWCU for Vessel Level Control

Follow-Up Questions & Answers:

Comments:

Align RWCU for Vessel Level Control

Give this page to the student

Initial Condition(s):

- The plant is in mode 2 with coolant temperature approximately _140_ degrees F.
- Plant startup is in progress.
- Component Cooling Water is in operation.
- RWCU is in Pre-Pump mode of operation with two pumps and two filters in service.
- Radiation Protection has been notified.

Initiating Cue(s):

- You have been directed to align RWCU for blowdown to the Main Condenser at 60 gpm.
- Other operators will control other plant parameters.

TRAINING PROGRAM:

OPERATOR TRAINING

TITLE:

Distribute Loads between ST-11 and ST-21

☒ New Material ☐ Minor Revision ☐ Major Revision ☐ Cancellation

REASON FOR REVISION: New JPM
THIS DOCUMENT REPLACES: N/A

REVIEW / APPROVAL (Print Name): ☐ TEAR Approval (TEAR #)

Prepared By: _____
**Preparer Date

Ops Review++: _____
Technical Reviewer (e.g., SME, line management) Date

Validated By: _____
Training Representative Date

Approved By: _____
+Discipline Training Supervisor Date

Approval Date:* _____

* Indexing Information
** The requirements of the Training Material Checklist have been met.
+ Indicates that the LP has been reviewed by the Training Supervisor for inclusion of Management Expectations and items referenced on TQJA-201- DD06, Training Material Checklist.
++ Indicates that Operations has reviewed and approved this material for exam use.

FLEET/REGIONAL PROGRAM CONCURRENCE:

☐ Fleet ☐ ENS ☐ ENN ☒ Not Applicable

DATE TRANSMITTED	INITIAL RECEIPT BY RM	RETURNED FOR CORRECTIONS	RETURN RECEIPT	FINAL ACCEPTANCE BY RM

TO RM	(DATE/INITIAL)	(DATE/INITIAL)	(DATE/INITIAL)	(DATE/INITIALS)

Generic Instructions

1. Standards and cues for valve operation:
   a. MOVs:
      1) "Turn the valve's handswitch on (panel #)(section#, as applicable) in the (clockwise or counter-clockwise) direction and observe that the valve's red light is (energized or de-energized) and its green light is (energized or de-energized)".
   b. Manual valves
      1) "Turn the valve's handwheel (or other manual operating device) in the (clockwise or counter-clockwise) direction until resistance is felt."

2. The Evaluator should indicate simulated analog gauge readings by pointing a pen or equivalent to the intended place on the gauge.

3. Other methods of simulating control, operation and data collection is at the discretion of the Evaluator.

4. It is expected that the candidate shall locate controlled copies of any required procedures and describe how copies of these procedures would be prepared for use in the field. Only at this time should the evaluator give the candidate previously prepared copies of the procedure(s). This entire procedure need only be performed or simulated once during the entire exam. <u>These activities are not required for JPMs conducted in the Simulator</u>.

5. Consideration of electrical safety must be made during the performance of certain tasks involving electrical circuits and circuit breakers. The performer should be aware that working on or near energized equipment requires, at a minimum, wearing 100% cotton clothing and low voltage (Class 0) gloves while removing or securing shock hazards such as chains, jewelry, watches and metal-framed eyeglasses. Operating or racking circuit breakers may require additional PPE. Details can be found in Att. 2 of the Electrical Safety Rulebook and General Operating procedure 04-S-04-2 (Operation of Electrical Circuit Breakers)

6. Obtain Shift Management's permission before opening any control panel or compartment. Avoid placing any tools, flashlights, pointing devices or any part of your body inside the panel or compartment in a manner that could disturb the operation of any component within or potentially result in an electric shock).

7. Use of lasers as a pointing tool requires Engineering's prior approval of the specific tool for safe use in the Control area. (specifically, the laser's emissions must be verified as not interfering with any component's intended operation or function).

8. During activities within the CAA, consideration must be given to area dose rates. When in a posted Radiation Area, check your EAD for dose rates and minimize time spent in the area. Entry into High Radiation Areas or Contamination Areas is prohibited.

Under no circumstances is any candidate allowed to operate any equipment outside the simulator without the permission of the Evaluator and Shift Management.

R27 Task 32: Distribute Loads between ST-11 and ST-21

Setting: Simulator

Type:	RO
Task:	CRO-R20/27-003; CRO-R20/27-008
K&A:	262001 A4.01 – 3.4/3.7; A4.02 – 3.4/3.4; A4.04 – 3.6/3.7; A4.05 – 3.3/3.3; 2.1.30 – 3.9/3.4; 2.1.31 – 4.2/3.9 295003 AA1.01 – 3.7/3.8; AA1.02 – 4.2/4.3; AA2.05 – 3.9/4.2
Safety Function:	6
Time Required:	30 minutes
Time Critical:	No
Faulted:	**YES**
Performance:	Actual
Reference(s):	04-1-01-R21-11; 04-1-01-R21-12; 04-1-01-R21-13; 04-1-01-R21-14; 04-1-01-R21-15; 04-1-01-R21-16; 05-1-02-1-I-4
Handout(s):	04-1-01-R21-12; 04-1-01-R21-13; 04-1-01-R21-15
# Manipulations:	14
# Critical Steps:	13
Group:	1

Simulator

Simulator Setups:

- ANY IC
- Transfer 12HE; 13AD; and 15AA to ST-21
- In the computer cross tie 18AG and 28AG with 28AG supplying 18AG
- Insert Malfunction r21133b for Service Transformer 21 Lockout on Trigger 2
- Insert Malfunction n41140b for Diesel Generator 12 fail to start on Trigger 2

Safety Concerns:

- None

R27 Task 32: Distribute Loads between ST-11 and ST-21

Initial Condition(s):

- All electrical buses are being supplied from Service Transformer 21.
- Preventive maintenance on Service Transformer 11 is complete and Entergy – Mississippi has released the transformer.
- GGNS 34.5 KV switchyard has been restored to a normal configuration with ESF and BOP Transformers energized.
- All Red Tags are cleared.
- All circuit breakers are racked in.

Initiating Cue(s):

- You have been directed to align BOP buses 12HE, 13AD and 15AA in their normal configuration.
- Another operator will transfer bus 18AG.

Notes

1. All controls will be from panels P864 and P807 in the Main Control Room.

Task Overview:

This task transfers buses from all being supplied by a single Service Transformer to a preferred alignment. Following the transfer the on-coming Service Transformer will experience a lockout. Additionally the ESF bus will not be automatically energized by the Diesel Generator requiring operator action to align to an offsite power source.

This task implements SOER 2002-3 Large Power Transformer Reliability.

R27 Task 32: Distribute Loads between ST-11 and ST-21

Tasks: critical tasks are underlined, italicized and denoted by (*)

NOTE: The order in which buses are transferred/restored is NOT critical.

BUS 12HE

€ Ensure XFMR 11B energized up to Bus Feeder Breaker 252-1201 by checking the following:

€ Check closed disconnect J5234 FDR to XFMR ST-11
Standard: Observes disconnect indication on P807 for J5234 red light on green light off.
Cue: As Indicated
Notes: Indication is on P807-3B.

€ Check closed circuit breaker 552-1105 XFMR ST-11 FDR to bus 11R
Standard: Observes circuit breaker indication on P807 for 552-1105 red light on green light off.
Cue: As Indicated
Notes: Indication is on P807-2C.

€ Check indicator R25-R603 34.5 bus voltage
Standard: Observes indicator R25-R603 on P807 section 1B indicates approximately 34.5KV.
Cue: As Indicated
Notes: Indication is on P807-1B.

€ Check closed circuit breaker 552-1101 11R FDR to bus 12R
Standard: Observes circuit breaker indication on P807 for 552-1101 red light on green light off.
Cue: As Indicated
Notes: Indication is on P807-1C.

€ Check closed disconnect 589-1101D BOP XFMR 11B disconnect
Standard: Observes disconnect indication on P807 for 589-1101D red light on green light off.
Cue: As Indicated
Notes: Indication is on P807-1C.

€ Check ENERGIZED status light is on
Standard: Observes ENERGIZED status light (purple light) is on for 252-1201 on P807.
Cue: As Indicated
Notes: Indication is on P807-2C.

€ * *Close 252-1201 XFMR 11B FDR to bus 12HE*
Standard: Closes circuit breaker 252-1201 by turning its handswitch on P807 clockwise in the CLOSE direction and holding while observing Red light on and green light off.
Cue: As Indicated
Notes: Circuit Breaker is controlled from P807-2C

€ Observes circuit breaker 252-1208 opens
Standard: Checks circuit breaker 252-1208 opens on P807 by observing its green light on and its red light off.
Cue: As Indicated
Notes: Circuit breaker indication is located on P807-2C

BUS 13AD

€ Ensure XFMR 11A energized up to Bus Feeder Breaker 152-1315 by checking the following:

€ Check closed disconnect J5234 FDR to XFMR ST-11
Standard: Observes disconnect indication on P807 for J5234 red light on green light off.
Cue: As Indicated
Notes: Indication is on P807-3B.

€ Check closed circuit breaker 552-1105 XFMR ST-11 FDR to bus 11R
Standard: Observes circuit breaker indication on P807 for 552-1105 red light on green light off.
Cue: As Indicated
Notes: Indication is on P807-2C.

€ Check indicator R25-R603 34.5 bus voltage
Standard: Observes indicator R25-R603 on P807 section 1B indicates approximately 34.5KV.
Cue: As Indicated
Notes: Indication is on P807-1B.

€ Check closed circuit breaker 552-1101 11R FDR to bus 12R
Standard: Observes circuit breaker indication on P807 for 552-1101 red light on green light off.
Cue: As Indicated
Notes: Indication is on P807-1C.

€ Check closed disconnect 589-1101C BOP XFMR 11A disconnect
Standard: Observes disconnect indication on P807 for 589-1101C red light on green light off.
Cue: As Indicated
Notes: Indication is on P807-1C.

€ Check ENERGIZED status light is on
Standard: Observes ENERGIZED status light (purple light) is on for 152-1315 on P807.
Cue: As Indicated
Notes: Indication is on P807-1C.

€ * *Close 152-1315 XFMR 11A FDR to bus 13AD*
Standard: Closes circuit breaker 152-1315 by turning its handswitch on P807 clockwise in the CLOSE direction and holding while observing Red light on and green light off.
Cue: As Indicated
Notes: Circuit Breaker is controlled from P807-1C

€ Observes circuit breaker 152-1302 opens
Standard: Checks circuit breaker 152-1302 opens on P807 by observing its green light on and its red light off.
Cue: As Indicated
Notes: Circuit breaker indication is located on P807-1C

BUS 15AA

€ Ensure XFMR ESF 11 energized up to Bus Feeder Breaker 152-1514 by checking the following:

€ Check closed disconnect J5234 FDR to XFMR ST-11
Standard: Observes disconnect indication on P807 for J5234 red light on green light off.
Cue: As Indicated
Notes: Indication is on P807-3B.

€ Check closed circuit breaker 552-1105 XFMR ST-11 FDR to bus 11R
Standard: Observes circuit breaker indication on P807 for 552-1105 red light on green light off.
Cue: As Indicated
Notes: Indication is on P807-2C.

€ Check indicator R25-R603 34.5 bus voltage
Standard: Observes indicator R25-R603 on P807 section 1B indicates approximately 34.5KV.
Cue: As Indicated
Notes: Indication is on P807-1B.

€ Check closed circuit breaker 552-1104 11R FDR to XFMR ESF11
Standard: Observes circuit breaker indication on P807 for 552-1104 red light on green light off.
Cue: As Indicated
Notes: Indication is on P807-1C.

€ Check closed circuit breaker 152-1901 FDR FRM XFMR ESF 11
Standard: Observes circuit breaker indication on P807 for 152-1901 red light on green light off.
Cue: As Indicated
Notes: Indication is on P807-1C.

€ Check ENERGIZED status light is on
Standard: Observes ENERGIZED status light (purple light) is on for 152-1514 on P864.
Cue: As Indicated
Notes: Indication is on P864-1C.

€ * *Turn on the Sync switch for breaker 152-1514 BUS 15AA FDR FRM XFMR ESF 11*
Standard: Turns on Sync Switch for 152-1514 by turning its handswitch on P864 clockwise in the ON direction.
Cue: As Indicated
Notes: Sync Switch is controlled from P864-1C

€ Check sync scope comes to 12 o'clock ± 10°.
Standard: Observes sync scope comes to 12 o'clock ± 10° on for 152-1514 on P864.
Cue: As Indicated
Notes: Indication is on P864-1B.

€ * *Close 152-1514 BUS 15AA FDR FRM XFMR ESF 11*

Standard: Closes circuit breaker 152-1514 by turning its handswitch on P864 clockwise in the CLOSE direction and holding while observing Red light on and green light off.

Cue: As Indicated

Notes: Circuit Breaker is controlled from P864-1C

€ Observes circuit breaker 152-1511 opens

Standard: Checks circuit breaker 152-1511 opens on P864 by observing its green light on and its red light off.

Cue: As Indicated

Notes: Circuit breaker indication is located on P864-1C

€ Turn off the Sync switch for breaker 152-1514 BUS 15AA FDR FRM XFMR ESF 11

Standard: Turns off Sync Switch for 152-1514 by turning its handswitch on P864 counter-clockwise in the OFF direction.

Cue: As Indicated

Notes: Sync Switch is controlled from P864-1C

ONCE the third bus is transferred (12HE, 13AD and 15AA), INSERT malfunctions on Trigger 1.
r21133b – Lockout Service Transformer 21
n41140b – Failure of Diesel Generator 12 (Division 2 DG)

This results in a loss of power to buses 11HD, 14AE, 16AB, and 17AC.

Bus 17AC will automatically re-energize from DG-13.

Per the Loss of AC Power ONEP (05-1-02-I-4) re-energize buses from available offsite feeders and/or DG.

The order of bus re-energization is NOT Critical.

BUS 11HD

€ Ensure XFMR 11B energized up to Bus Feeder Breaker 252-1101 by checking the following:

€ Check closed disconnect J5234 FDR to XFMR ST-11
Standard: Observes disconnect indication on P807 for J5234 red light on green light off.
Cue: As Indicated
Notes: Indication is on P807-3B.

€ Check closed circuit breaker 552-1105 XFMR ST-11 FDR to bus 11R
Standard: Observes circuit breaker indication on P807 for 552-1105 red light on green light off.
Cue: As Indicated
Notes: Indication is on P807-2C.

€ Check indicator R25-R603 34.5 bus voltage
Standard: Observes indicator R25-R603 on P807 section 1B indicates approximately 34.5KV.
Cue: As Indicated
Notes: Indication is on P807-1B.

€ Check closed circuit breaker 552-1101 11R FDR to bus 12R
Standard: Observes circuit breaker indication on P807 for 552-1101 red light on green light off.
Cue: As Indicated
Notes: Indication is on P807-1C.

€ Check closed disconnect 589-1101D BOP XFMR 11B disconnect
Standard: Observes disconnect indication on P807 for 589-1101D red light on green light off.
Cue: As Indicated
Notes: Indication is on P807-1C.

€ Check ENERGIZED status light is on
Standard: Observes ENERGIZED status light (purple light) is on for 252-1101 on P807.
Cue: As Indicated
Notes: Indication is on P807-1C.

NOTE: Candidate may go directly to breaker 252-1101 handswitch and energize the bus.

€ * *Close 252-1101 XFMR 11B FDR to bus 11HD*
Standard: Closes circuit breaker 252-1101 by turning its handswitch on P807 clockwise in the CLOSE direction and holding while observing Red light on and green light off.
Cue: As Indicated
Notes: Circuit Breaker is controlled from P807-1C

€ Observes circuit breaker 252-1108 opens
Standard: Checks circuit breaker 252-1108 opens on P807 by observing its green light on and its red light off.
Cue: As Indicated
Notes: Circuit breaker indication is located on P807-1C

€ * *Close supply circuit breakers for the following Load Control Centers (LCC):*

_____ **LCC 11BD7 breaker 52-11701*
_____ **LCC 11BD4 breaker 52-11401*
_____ **LCC 11BD3 breaker 52-11301*
_____ **LCC 11BD2 breaker 52-11201*
_____ **LCC 21BD4 breaker 52-21401*
_____ **LCC 21BD3 breaker 52-21301*

Standard: Closes the above circuit breakers on H13-P807 by placing the handswitch clockwise in the CLOSE direction and holding while observing red light on and green light off.

Cue: As Indicated

Notes: Circuit Breakers are controlled from P807

BUS 14AE

€ Ensure XFMR 11A energized up to Bus Feeder Breaker 152-1415 by checking the following:

€ Check closed disconnect J5234 FDR to XFMR ST-11
Standard: Observes disconnect indication on P807 for J5234 red light on green light off.
Cue: As Indicated
Notes: Indication is on P807-3B.

€ Check closed circuit breaker 552-1105 XFMR ST-11 FDR to bus 11R
Standard: Observes circuit breaker indication on P807 for 552-1105 red light on green light off.
Cue: As Indicated
Notes: Indication is on P807-2C.

€ Check indicator R25-R603 34.5 bus voltage
Standard: Observes indicator R25-R603 on P807 section 1B indicates approximately 34.5KV.
Cue: As Indicated
Notes: Indication is on P807-1B.

€ Check closed circuit breaker 552-1101 11R FDR to bus 12R
Standard: Observes circuit breaker indication on P807 for 552-1101 red light on green light off.
Cue: As Indicated
Notes: Indication is on P807-1C.

€ Check closed disconnect 589-1101C BOP XFMR 11A disconnect
Standard: Observes disconnect indication on P807 for 589-1101C red light on green light off.
Cue: As Indicated
Notes: Indication is on P807-1C.

€ Check ENERGIZED status light is on
Standard: Observes ENERGIZED status light (purple light) is on for 152-1415 on P807.
Cue: As Indicated
Notes: Indication is on P807-2C.

NOTE: Candidate may go directly to breaker 252-1101 handswitch and energize the bus.

€ * *Close 152-1415 XFMR 11A FDR to bus 14AE*
Standard: Closes circuit breaker 152-1415 by turning its handswitch on P807 clockwise in the CLOSE direction and holding while observing Red light on and green light off.
Cue: As Indicated
Notes: Circuit Breaker is controlled from P807-2C

€ Observes circuit breaker 152-1402 opens
Standard: Checks circuit breaker 152-1402 opens on P807 by observing its green light on and its red light off.
Cue: As Indicated
Notes: Circuit breaker indication is located on P807-2C

BUS 16AB

There are two options for the candidate. Either Option is acceptable.

Option 1 ESF Transformer 11

€ Ensure XFMR ESF 11 energized up to Bus Feeder Breaker 152-1601 by checking the following:

€ Check closed disconnect J5234 FDR to XFMR ST-11
Standard: Observes disconnect indication on P807 for J5234 red light on green light off.
Cue: As Indicated
Notes: Indication is on P807-3B.

€ Check closed circuit breaker 552-1105 XFMR ST-11 FDR to bus 11R
Standard: Observes circuit breaker indication on P807 for 552-1105 red light on green light off.
Cue: As Indicated
Notes: Indication is on P807-2C.

€ Check indicator R25-R603 34.5 bus voltage
Standard: Observes indicator R25-R603 on P807 section 1B indicates approximately 34.5KV.
Cue: As Indicated
Notes: Indication is on P807-1B.

€ Check closed circuit breaker 552-1104 11R FDR to XFMR ESF11
Standard: Observes circuit breaker indication on P807 for 552-1104 red light on green light off.
Cue: As Indicated
Notes: Indication is on P807-1C.

€ Check closed circuit breaker 152-1901 FDR FRM XFMR ESF 11
Standard: Observes circuit breaker indication on P807 for 152-1901 red light on green light off.
Cue: As Indicated
Notes: Indication is on P807-1C.

€ Check ENERGIZED status light is on
Standard: Observes ENERGIZED status light (purple light) is on for 152-1601 on P864.
Cue: As Indicated
Notes: Indication is on P864-2C.

€ * *Close 152-1601 BUS 16AB FDR FRM XFMR ESF 11*
Standard: Closes circuit breaker 152-1601 by turning its handswitch on P864 clockwise in the CLOSE direction and holding while observing Red light on and green light off.
Cue: As Indicated
Notes: Circuit Breaker is controlled from P864-2C

Option 2 ESF Transformer 12

€ Ensure XFMR ESF 12 energized up to Bus Feeder Breaker 152-1611 by checking the following:

€ Check closed disconnect J3885 FDR to XFMR ESF 12
Standard: Observes disconnect indication on P807 for J3885 red light on green light off.
Cue: As Indicated
Notes: Indication is on P807-1C.

€ Check closed circuit breaker 152-1903 FDR FRM XFMR ESF 12
Standard: Observes circuit breaker indication on P807 for 152-1903 red light on green light off.
Cue: As Indicated
Notes: Indication is on P807-1C.

€ Check ENERGIZED status light is on
Standard: Observes ENERGIZED status light (purple light) is on for 152-1611 on P864.
Cue: As Indicated
Notes: Indication is on P864-2C.

€ * *Close 152-1611 BUS 16AB FDR FRM XFMR ESF 12*
Standard: Closes circuit breaker 152-1611 by turning its handswitch on P864 clockwise in the CLOSE direction and holding while observing Red light on and green light off.
Cue: As Indicated
Notes: Circuit Breaker is controlled from P864-2C

€ Orders Turbine Building Operator to reset Bus Undervoltage Lockouts for BOP Buses 11HD and 14AE
Standard: Contacts Turbine Building Operator to reset Bus Undervoltage Lockouts for buses 11HD and 14AE
Cue: Turbine Building Operator is dispatched.
Notes: This action may be performed any time after the buses have been re-energized.

Task Standard(s):

BOP Buses 11HD & LCCs, 12HE, 13AD and 14AE are energized from Service Transformer 11

ESF Bus 15AA is energized from ESF Transformer 11.

ESF Bus 16AB is energized from either ESF Transformer 11 or 12.

ESF Bus 17AC is energized from Diesel Generator 13.

Name: _____Time Start: _____Time Stop: _____

R27 Task 32: Distribute Loads between ST-11 and ST-21

Follow-Up Questions & Answers:

Comments:

Distribute Loads between ST-11 and ST-21

Give this page to the student

Initial Condition(s):

- All electrical buses are being supplied from Service Transformer 21.
- Preventive maintenance on Service Transformer 11 is complete and Entergy – Mississippi has released the transformer.
- GGNS 34.5 KV switchyard has been restored to a normal configuration with ESF and BOP Transformers energized.
- All Red Tags are cleared.
- Allcircuit breakers are racked in.

Initiating Cue(s):

- You have been directed to align BOP buses 12HE, 13AD and 15AA in their normal configuration.
- Another operator will transfer bus 18AG.

Appendix D | Scenario Outline | Form ES-D-1

Facility: **GRAND GULF NUCLEAR STATION** Scenario No.: **1** Op-Test No.: **Day 0**

Examiners: _____ Operators: _____
_____ _____
_____ _____

Objectives: To evaluate the candidates' ability to operate the facility in response to the following evolutions:

1. Startup 2nd RFPT and place on Master Controller.
2. Raise Reactor Power by withdrawing control rods.
3. *Respond to failed Reed Switch requiring substitute position.*
4. Respond to single control rod stuck per ONEP 05-1-02-IV-1.
5. Respond to APRM D failure upscale.
6. Respond to Pressure Controller fault Reactor Pressure rising.
7. Take actions per the EOPs in response to an ATWS and mitigate the consequences of the ATWS.
8. Respond to failure of Main Steam Bypass Valves to fully function.
9. *Respond to a failure of SLC to function properly.*

Initial Conditions: Reactor Power is at *50* %. Plant startup is in progress following an outage. Reactor Recirculation pumps in Fast Speed; a single Reactor Feed Pump in Three element Master Level Control; both Heater Drain Pumps are pumping forward.

INOPERABLE Equipment

SRM 'F' are INOP and bypassed.
IRMs 'A' & 'H' are INOP and bypassed.
APRM 'H' is INOP due to failed downscale and is bypassed.
HPCS Pump is tagged out of service for failure of the Jockey Pump.
ESF 12 Transformer is tagged out of service for maintenance.
RPS 'A' is on Alternate Power due to EPA circuit breaker failure.
SBGT 'A' is operating for surveillance.
Appropriate clearances and LCOs are written.

Turnover: Continue plant startup per IOI-2. Ready for startup of RFPT 'B'. There are scattered

thunder showers reported in the Tensas Parish area.			
Event No.	Malf. No.	Event Type*	Event Description
1		N (RO)	Place RFPT B in service on the Master Level Controller. (SOI 04-1-01-N21-1)
2		R (RO)	Raise Reactor power using control rods to *52*%. (Control Rod Pull Sheet)

Appendix D | Scenario Outline | Form ES-D-1

Scenario **1** Day **0** (Continued)

Event No.	Malf. No.	Event Type*	Event Description
3	***1***	*I (RO)*	*Respond to a failed Reed Switch on control rod being moved requiring substitute position to be entered (SOI 04-1-01-C11-2)*
4	**2**	C (RO/ BOP) TS (SS)	Respond to single control rod immovable taking actions to move the control rod. (ONEP 05-1-02-IV-1) Disarm Control Rod. Complete **Technical Specification** determination.
5	**3**	C (RO) TS (SS)	Respond to failure of APRM D upscale. Complete **Technical Specification** determination. (ARI 04-1-02-1H13-P680 7A-B11)
6	**4**	C(RO)	Respond to a failure of the Reactor Pressure Control System with pressure rising. (ARI 04-1-02-1H13-P680 9A-D2)
	5	C (RO)	Recognize a failure to scram using RPS and manually scram the reactor using ATWS ARI.
7	**6**	M (ALL)	Respond to ATWS with partial Main Steam Bypass Valve availability. (EOP 05-1-01-EP-2A)
8	**7**	C (BOP)	Respond to a failure of Standby Liquid Control to initiate. (SOI 04-1-01-C41-1 and EOP 05-1-01-EP-2A)

* (N)ormal, (R)eactivity, (I)nstrument, (C)omponent, (M)ajor

Critical Tasks

- Inserts rods by manual scrams and normal rod insertion using Attachments 18, 19, and 20.

- When allowed by Level / Power Control leg of EP-2A, restores injection from Condensate / Feedwater.

- Terminates and prevents all injection except boron, CRD and RCIC when required by steps L-7 or 8 of EP-2A.

  - For ATWS above 4% power, injects SLC A/B before Suppression Pool temperature reaches 110 degrees F.

Scenario **1** Day **0** (Continued)

Crew Turnover:

Rx is at 50% CTP.

SRMs 'F' is bypassed.

IRMs 'A' & 'H' are INOP and bypassed.

APRM 'H' is INOP and bypassed due to failed downscale.

HPCS Pump is tagged out of service for failure of the Jockey Pump.

ESF Transformer 12 is tagged out of service for Entergy –Mississippi maintenance.

RPS 'A' is on Alternate Power due to EPA circuit breaker failure.

SBGT 'A' is operating for surveillance 06-OP-1T48-M-0001 section 5.2.11 allowing the System Engineer to obtain data.

Hydrogen Water Chemistry and Alternate Cooling Tower are out of service.

Both Circ Water Pumps are in service.

Appropriate clearances and LCOs are written.

Continue plant startup per IOI-2 step 5.16.1.

Ready for startup of RFPT 'B'.

Control Rod movement is at step 120b for the Startup Sequence.

Plant EOOS factor is 7.3 YELLOW.

There are scattered thunderstorms reported in the Tensas Parish area.

Simulator Setup: (Scenarios may be setup and shot into encrypted ICs and Password protected.)

Start the process from a new simulator load.
Reset to IC-13.

Verify or perform the following:

IC: 13

OOS: APRM H (Place in Bypass w/ Caution tag)
IRMs A & H (Place in Bypass w/ Caution tag)
SRMs F (Place in Bypass w/ Caution tag)
RPS A (Transfer to Alternate Power and reset RPS A w/ Caution tag)
Manually Initiate SBGT A
HPCS and HPCS Jockey Pump OOS (Place HPCS OOSVC to OOSVC and place tags on HPCS Pump and Jockey Pump HS)
ESF XFMER 12 (Place tag on J3885, 152-1903, 152-1904, 152-1905, 152-1511, 152-1611, 152-1704 HS)

Active malfunctions: **c51002f** SRM F incorporated into present simulator load
c51005a IRM A incorporated into present simulator load
c51005h IRM H incorporated into present simulator load
c51010h APRM H downscale
c71077a RPS A MG failure (Normal EPA OOS)
z022022_36_37 Control rod 36-37 stuck
c11164@20% CRD Hydraulic Block
c41f004a_d SLC Squib fail to fire
c41f004b_d SLC Squib fail to fire

Active Remote Functions: **p81218** J3885 115KV Disconnect **OPEN**
e22644 HPCS Pump BKR **OUT**
e22646 HPCS JKY pump breaker **OPEN**
152-1511 **lo_1r21m601a_g** Bus 15AA FDR FM ESF XFMR 12 **OFF**
di_1r21m601ap864/01c Bus 15AA FDR FM ESF XFMR 12 **TRIP**
152-1611 **lo_1r21m601b_g** Bus 16AB FDR FM ESF XFMR 12 **OFF**

di_1r21m601bp864/02c Bus 16AB FDR FM ESF XFMR 12 **TRIP**
152-1704 lo_1e22m709_g 17AC FDR FM ESF 12 **OFF**
di_1e22m709p601/16c 17AC FDR FM ESF 12 **OFF**
152-1903 lo_1r21m623_g Bus 15AA/16AB/27AC FDR FM ESF XFMR 12 **OFF**
di_1r21m623p807/01c Bus 15AA/16AB/27AC FDR FM ESF XFMR 12 **TRIP**
152-1904 lo_1r21m624_g Bus 17AC/25AA/26AB FDR FM ESF XFMR 12 **OFF**
di_1r21m624p807/01c Bus 17AC/25AA/26AB FDR FM ESF XFMR 12 **TRIP**
152-1905 lo_1r21m637_g SWYD XFMR T3 FDR FM ESF XFMR 12 **OFF**
di_1r21m637p807/01c SWYD XFMR T3 FDR FM ESF XFMR 12 **TRIP**

Active Case File: **cae sgtsai.cae** SBGT A operating for surveillance

Active overrides: None

Pending overrides: None

Pending malfunctions: **c51009d** APRM D failed upscale (TRG 4)
c71162 Failure to Scram Manual and Automatic (ATWS ARI Available) (TRG 5)
tc079 3 second time delay ramp to 0% over 15 seconds Pressure Control Failure pressure rising (TRG 5)
rci035 *Reed switch failed open on selected control rod (TRG 2)*

Pending component malfunctions: None

Trigger files: Trigger 2 Reed Switch failure on selected control rod
Trigger 4 APRM D Failed upscale
Trigger 5 Pressure Controller Failure - Pressure rising

COMPONENT	PANEL	INDICATION or CONTROL	SIMULATOR CODE	STATUS	DONE
APRM H			c51010h	downscale	
HPCS PUMP	P601-16C		e22644_OUT	OUT	

HPCS Jockey Pump	P601-16C		e22646_OPEN	OPEN	
RPS A on Alternate	P610	Handswitch	c71077a	ALT	
152-1511	P864-1C	Green light	lo_1r21m601a_g	OFF	
	P864-1C	Handswitch	di_1r21m601a	STOP	
152-1611	P864-2C	Green light	lo_1r21m601b_g	OFF	
	P864-2C	Handswitch	di_1r21m601b	STOP	
152-1704	P601-16C	Green light	lo_1e22m709_g	OFF	
	P601-16C	Handswitch	di_1e22m709	STOP	
152-1903	P807-1C	Green light	lo_1r21m623_g	OFF	
	P807-1C	Handswitch	di_1r21m623	STOP	
152-1904	P807-1C	Green light	lo_1r21m624_g	OFF	
	P807-1C	Handswitch	di_1r21m624	STOP	
152-1905	P807-1C	Green light	lo_1r21m637_g	OFF	
	P807-1C	Handswitch	di_1r21m637	STOP	
J3885 115 KV Disconnect	P807-1C	Green Light	p81218	OPEN	

Bypass Division 2 APRM Bypass Joystick to APRM H position.

IRMs A and H, SRM F are bypassed in the IC setup for Cycle 15.

Verify or perform the following:

Verify Reactor Power is above the 75% rod line.

Open Circuit Breakers 152-1903, 1904, 1905, 1511, 1611, and 1704

Place HPCS OOSVC handswitch to OOSVC.

Place RPS A on Alternate Power and RESET RPS A logic on P680.

Verify SBGT A is operating.

Startup all PDS / SPDS screens. Clear any graphs and trends off of SPDS.

Setup the presently used cyclops display and verify it is functional.

Ensure the correct startup sequence is available at the P680 for the present IC.

Install turnover guide, red tag, and LCO paperwork as applicable.

Advance all chart recorders and ensure all pens are inking properly.
(APRM chart recorders must be turned on and settings for scales on pens 0 – 125 scale)

Place tags on ALL circuit breakers associated with the ESF 12 Transformer outage.

Place tags on APRM H, IRM A & H and SRMS F Joysticks.

Place tags on HPCS Pump and Jockey Pump handswitches.

Adjust APRM Gains.

SIMULATOR OPERATION SCENARIO 1

Once simulator is reinitialized and setup complete take the simulator out of Freeze.

Once the Crew has taken control note the simulator time.

Place RFPT B on Master Level controller

Start RFPT B per SOI 04-1-01-N21-1 section 4.5.5 and 4.6.5.

Cues:

If asked, as Turbine Building Operator close RFPT Steam line drains on P175.

If asked, biasing on the Reactor Feed Pumps should be balanced.

Cue: **The CRS to raise reactor power to 55% for Reactor Engineering data.**

When asked open the RFPT steam line drains with remote functions fw102 and fw104.

Raise Reactor Power using control rods

The RO will raise reactor power by withdrawing control rod per the Control Rod Movement Sequence.

Cues:

If asked, as Reactor Engineer withdraw control rods per the movement sequence beginning at step 120b.

After the first couple of control rod movements activate TRIGGER 2. This will insert the malfunction on the selected control rod.

Open Reed Switch on selected control rod

The RO will receive a control rod block on selected control rod due to a failed reed switch open.

This will most likely be control rod 36-13 if in gang movement.

The RO will enter substitute position from the other channel of RCIS Position Indication.

Cues:

If asked, as I&C the other channel of Rod Position Data is good and may be substituted.

The SS may initiate a potential LOC TR for TS 3.1.3 to track SR 3.1.3.1 position indication failure.

Remove Malfunction when substitution is complete.

Immovable Control Rod

When the RO gets to control rod 36-37 the control rod will NOT move. This will prompt entry into ONEP 05-1-02-IV-1 Control Rod/Drive Malfunctions section 3.5.

Cues:

If asked, as Reactor Engineering raising CRD Drive Pressure is acceptable.

If asked, as Auxiliary Building Operator report CRD Drive Filter DP 17 psid, Suction Filter DP is 2.1 psid, Backwash Filter DP is 2.0 psid and the CRD Flow Control Station is functioning properly.

If asked, as Reactor Engineering about individually scramming the control rod inform the CRS that analysis on the effects needs to be performed hold reactor power at this point. Until further analysis individually scramming the control rod is NOT acceptable.

If asked, report as Auxiliary Building Operator Local Drive Water Pressure gages are tagged out for a work order to replace the gages.

SS should consult Tech Specs for TS 3.1.3 and declare the control rod INOP.
SS may consider a Potential LCO for TS 3.1.4 Scram Times

APRM D failure Upscale

One minute after Reactor Engineering cue, **activate TRIGGER 4**.

Cues:

If asked, report as I&C the APRM is hard failed upscale with no apparent cause and it will require further investigation.

SS should direct un-bypassing APRM H and bypassing APRM D to clear the scram signal and take the Control Rod Withdrawal Block. Then direct resetting RPS B.

SS will consult Tech Specs for 3.3.1.1 Reactor Protection System Instrumentation is NOT met for RPS B and 3.3.2.1 Control Rod Block Instrumentation is met but a Potential LCO is appropriate.

If APRM H is to be left bypassed with APRM D failed upscale, TR 3.3.2.1 Condition E applies.

Reactor Pressure Control System Failure - RPV Pressure Rising

One minute after the Tech Spec call, **activate TRIGGER 5.**

This will cause a pressure controller failure raising reactor pressure and initiating a Reactor Scram signal (Automatic RPS actuation will fail however the RO can insert a manual reactor scram signal to RPS and subsequent ATWS due to a CRD Scram Discharge Volume Hydraulic Block.

The Main Steam Bypass valves will be available for pressure control for 3 minutes after the Manual Bypass Jack is energized to open Main Steam Bypass Valves.

This is an ATWS with limited Main Steam Bypass Valves available for Reactor Pressure Control.

EP Attachments which may be requested:

Attachment 12 Defeat RHR Shutdown Cooling interlocks 6 minutes to DONE
Attachment 19 Defeat RPS 4 minutes to DONE

Attachment 20 Defeat RCIS 5 minutes to DONE

Attachment 8 Defeat MSIV isolations 9 minutes to DONE

If Attachment 8 is requested early by itself - 3 minutes to DONE

Attachment 18 Defeat ATWS ARI 3 minutes to DONE

TERMINATION

Once Control Rods are being inserted and the Lead Evaluator concurs, the scenario may be terminated.

Critical Tasks

- Inserts rods by manual scrams and normal rod insertion using Attachments 18, 19, and 20.
- When allowed by Level / Power Control leg of EP-2A, restores injection from Condensate / Feedwater.
- Terminates and prevents all injection except boron, CRD and RCIC when required by steps L-7 or L-8 of EP-2A.
- For ATWS above 4% power, injects SLC A/B before Suppression Pool temperature reaches 110 degrees F.

Emergency Plan Procedure – Emergency Action Level Classification

Site Area Emergency based on 10-S-01-1 Attachment I EAL SS3

Appendix D | Operator Actions | Form ES-D-2

Op-Test No.: _____ Scenario No.: __1___ Event No.: ___1__

Event Description: **Start RFPT B and place on Master Controller (SOI 04-1-01-N21-1)**

Time	Position	Applicant's Actions or Behavior
	RO	Starts up RFPT B and places control of the feed pump on the Master Level Controller SOI 04-1-01-N21-1.
	BOP	Monitors Reactor Power, Level and Pressure.

Op-Test No.: _____ Scenario No.: __1___ Event No.: ___2__

Event Description: **Raise Reactor power by withdrawing control rods. (Control Rod Movement Sequence)**

Time	Position	Applicant's Actions or Behavior
	SS	Conducts Reactivity Brief on expectations for Control Rod movement.
	RO	Withdraws control rods in accordance with Control Rod Movement Sequence to raise reactor power.
	BOP	Peer Check Control Rod selection and movement and assist in monitoring Reactor Level, Pressure and Power.

Appendix D | Operator Actions | Form ES-D-2

Op-Test No.: _____ Scenario No.: __**1**___ Event No.: ___***3***__

Event Description: ***Control Rod withdrawal block due to failed Rod Position indication Enter substitute position to clear fault.***
(ARI 04-1-02-1H13-P680 4A2-C5; SOI 04-1-01-C11-2)

Time	Position	Applicant's Actions or Behavior
	RO	Observes Control Rod Withdrawal Block and loss of position indication for the selected control rod. (ARI 04-1-02-1H13-P680 4A2-C5)
	SS	Acknowledges the problem and orders entering substitute position to allow movement of the control rod to a position with good indication.
	SS	May order a potential LCOTR for TS 3.1.3 due to a failed channel.
	RO	Enters Substitute Position for RCIS on the affected Control Rod and moves the control rod per the movement sequence. (SOI 04-1-01-C11-2)

Appendix D | Operator Actions | Form ES-D-2

Op-Test No.: _____ Scenario No.: __1__ Event No.: ___4_

Event Description: **Control rod 36-37 immovable**

(ONEP 05-1-02-IV-1; Tech Specs 3.1.3 and 3.1.4)

Time	Position	Applicant's Actions or Behavior
	RO	Recognizes control rod 36-37 will not move when given a withdraw signal.
	SS	Enter ONEP 05-1-02-IV-1 and contact Auxiliary Building Operator to verify CRD system parameters.
	SS	Directs raising CRD Drive Water Pressure in 25 psid increments to attempt to move the control rod.
	BOP	Throttles C11-F003 CRD Pressure Control Valve to adjust CRD Drive Water Pressure.
	RO	Attempts to move control rod 36-37 and determines control rod is stuck.
	BOP	Verify Seal Steam Pressure Extraction Steam pressure Low due to down power.
	SS	Contacts Reactor Engineering for determination to individually scram the control rod.

	SS	Refers to Tech Spec 3.1.3 and criteria for TS 3.1.4.

Appendix D | Operator Actions | Form ES-D-2

Op-Test No.: _____ Scenario No.: __1__ Event No.: ___5_

Event Description: **APRM D fails upscale**

(ARI 04-1-02-1H13-P680 7A-B11; SOI-04-1-01-C51-1; Tech Specs 3.3.1.1; 3.3.2.1 and TRM 3.3.1.1)

Time	Position	Applicant's Actions or Behavior
	RO	Responds to and reports the annunciators for APRM D failing upscale and half scram for RPS B. May remind SS that APRM H is bypassed in the Division 2.
	BOP	Investigates APRM D and reports failed hard upscale.
	SS	Contacts I&C to investigate APRM D.
	SS	Reviews Tech Specs 3.3.1.1 and 3.3.2.1 and TRM 3.3.1.1. Determination that TS3.3.1.1 is not met due to APRM H and D being INOP in Division 2. (3 of 4 must be operable). TS 3.3.2.1 is met by having 6 of 8 APRMs operable. TR 3.3.2.1 Condition E applies if APRM H remains Bypassed with a half scram and upscale due to APRM Upscale Alarm.
	SS	(Optional) May decide to un-bypass APRM H and bypass APRM D to take a Control Rod Withdrawal Block but be able to reset the Division 2 Half Scram signal until I&C can repair either APRM H or D.

	RO	When directed, un-bypasses APRM H and bypasses APRM D.
	RO	Resets Division 2 RPS.

Appendix D | Operator Actions | Form ES-D-2

Op-Test No.: _____ Scenario No.: __1__ Event No.: ___6_

Event Description: **Pressure Controller Failure – Reactor Pressure Rising**

Time	Position	Applicant's Actions or Behavior
	RO	Responds to Reactor Pressure and Power rising due to failure of Pressure Control System closing Turbine Control Valves. Reactor Pressure will reach RPS Scram setpoint however RPS will fail to actuate.
	RO	Manually initiate or verify actuation of ATWS ARI to insert control rods and inform SS of failure of RPS actuation.
	RO	Observes and reports failure of all control rods to fully insert on ATWS ARI actuation. (CRD Scram Discharge Volume Hydraulic Block)
	RO	Observes and reports Reactor Recirc Pumps Tripped to OFF.
	RO	Provides SS with Scram Report of status of Feedwater, Control Rods, Recirc, and Pressure control.

Appendix D | Operator Actions | Form ES-D-2

Op-Test No.: _____ Scenario No.: __2__ Event No.: __7___

Event Description: **ATWS with Partial Main Steam Bypass Valves (05-1-01-EP-2; 2A; and 3)**

Time	Position	Applicant's Actions or Behavior
	SS	Enters EP-2A.
	BOP	On orders inhibits ADS.
		HPCS Override is not necessary due to Out of service, may elect to close E22-F004 HPCS Injection valve.
	RO	Realigns Condensate and Feedwater on Startup Level Control and maintains reactor level within level band specified by the SS. Initially may operate in a normal lineup then transition to Startup Level Control.
	BOP	Maintains RPV pressure based on SS orders using Turbine Bypass valves or SRVs as appropriate. (optional) Pressure band 800 – 1060 psig. Should attempt to open Main Steam Bypass Valves using the Manual Bypass Jack. This is manually positioning the Bypass valves to maintain pressure. These are acceptable.
	SS	May order opening of long and short string Main Steam Drains to supplement pressure control.
	SS	Order manual initiation and overriding of Low Pressure ECCS.
	BOP	On orders manually initiates and overrides Low Pressure ECCS.

	BOP/RO	When ordered by SS, restores Auxiliary Building, Containment, and Drywell isolation (Instrument Air, Plant Service Water, and Drywell Chilled Water). (Attachment 7 of EP-1)

Appendix D | Operator Actions | Form ES-D-2

Op-Test No.: _____ Scenario No.: __1__ Event No.: __7___

Event Description: **ATWS with Main Steam Bypass Valves (Cont.)**

Time	Position	Applicant's Actions or Behavior
	SS **	Orders installation of Attachments 18, 19, and 20 of EP-1. (may not order Attachment 18 since RPS is still energized.)
	SS	Orders installation of Attachments 8 and 12 of EP-1.
	BOP	Notifies SS of MSL RAD HI (If Alarmed)
	SS	Enters EP-4 on MSL RAD HI (If Alarmed)
	SS **	Based on conditions orders Terminate and Prevent step to lower RPV level to reduce reactor power.
	BOP/RO **	Terminates and prevents systems ordered by SS RHR A RHR B RHR C LPCS
	RO **	On orders of SS, initiates flow to the RPV from Condensate / Feedwater.
	BOP/RO **	Insert Control Rods by inserting rods using CRD/RCIS. CRD Drive Pressure, Instrument Air to Containment and Auxiliary Building, and RPS reset. (Scramming rods is not an option) If low pressure ECCS has been initiated, RPS A has no power because the EPA breakers are tripped due powered from alternate.

** Critical Task

Appendix D | Operator Actions | Form ES-D-2

Op-Test No.: _____ Scenario No.: __1__ Event No.: __7/8___

Event Description: **ATWS with Main Steam Bypass Valves (Cont.)**

Time	Position	Applicant's Actions or Behavior
	SS**	If Reactor power is above 4%, orders Standby Liquid Control (SLC) initiation. (Must be ordered before 110 degrees F in Suppression Pool.
	BOP	On orders initiates both trains of Standby Liquid Control.
	BOP	Observes failure of SLC Squib Valves to fire and reports to SS.
	SS	Orders injection of boron using Attachment 28 of EP-1
	SS	If level drops below –191 inches Fuel Zone and cannot be restored, may elect to Emergency Depressurize. (Optional) (SS may continue if systems are available to raise level.)
	SS	If Emergency Depressurization is required, orders to Initiate Standby Liquid Control will be given.
	SS	Orders Terminate and Prevent step for Emergency Depressurization. (Optional)
	BOP/RO	Terminates and prevents injection systems ordered by SS. (Optional) Boron, CRD and RCIC are acceptable to remain operating and injecting.
	BOP/RO	If ordered opens 8 ADS SRVs. (Optional)

	SS	Upon Reactor pressure drop < 219 psig with 8 SRVs (see Table 6 of EP-2A) open, orders slow injection with Condensate and Feedwater. (Optional)
	BOP/RO	Injects with Condensate at prescribed rates by SS. (Optional)

** Critical Task Optionals for Emergency Depressurization leg of EP-2A are only if SS elects to use this based on RP

Appendix D | Scenario Outline | Form ES-D-1

Facility: **GRAND GULF NUCLEAR STATION** Scenario No.: **2** Op-Test No.: **Day 0**

Examiners: _____ Operators: _____
_____ _____
_____ _____

Objectives: To evaluate the candidates' ability to operate the facility in response to the following evolutions:

1. Shift Main Turbine EHC Pumps.
2. Start RCIC for EPI and respond to RCIC over speed trip.
3. Raise Reactor Power using Reactor Recirc Flow.
4. Respond to a Main Steam Line Radiation Monitor failure downscale.
5. Respond to control rod drifting inward.
6. Respond to a LPRM failure downscale.
7. Respond to a loss of Main Condenser Vacuum.
8. Respond to a loss of Offsite Power with failure of Division 3 Diesel Generator.

Initial Conditions: Reactor Power is at 80 %.

INOPERABLE Equipment

SRM 'F' are INOP and bypassed.
IRMs 'A' & 'H' are INOP and bypassed.

Appropriate clearances and LCOs are written.

Turnover: Shift Main Turbine EHC pumps to 'A' and 'C' operating and 'B' in Standby. Once shifted raise Reactor Power to 90%. There are scattered thunder showers reported in the Tensas Parish area.

Event No.	Malf. No.	Event Type*	Event Description
1		N (RO)	Shift operating EHC pumps. (SOI 04-1-01-N32-1)
2		R (RO)	Raise Reactor Power using Recirc Flow to 90%.
3	**1**	C	Start RCIC per EPI 04-1-03-E51-2 then respond to RCIC

		(BOP) TS (SS)	Overspeed Trip. Complete **Technical Specification** determination. (Tech Spec 3.5.3)

Appendix D | Scenario Outline | Form ES-D-1

Scenario **2** Day **0** (Continued)

Event No.	Malf. No.	Event Type*	Event Description
4	**2**	TS (SS)	Respond to Main Steam Line Radiation Monitor failure downscale. (ARI 04-1-02-1H13-P601) Complete **Technical Specification** determination.(TR 3.3.6.1 Table TR 3.3.6.1-2)
5	**3**	C (RO) TS (SS)	Respond to control rod drifting inward. (ONEP 05-1-02-IV-1) Complete **Technical Specification** determination.(TS 3.1.3)
6	**4**	I (RO) TS (SS)	Respond to a LPRM failure downscale. (ARI 04-1-02-1H13-P680; 17-S-02-40) Complete **Technical Specification** determination.(TS 3.3.1)
7	**5**	C (ALL)	Respond to a loss of Main Condenser Vacuum. (ONEP 05-1-02-V-8)
8	**6**	M (ALL)	Respond to a Loss of Offsite Power. (ONEP 05-1-02-I-4)
	7		Respond to a failure of Division 3 Diesel Generator operate.

* (N)ormal, (R)eactivity, (I)nstrument, (C)omponent, (M)ajor

Critical Tasks

- When level drops to <-191 inches or after level drops between TAF and – 191 inches, opens at least seven SRVs before level drops to – 212 inches. Pumps must be running and lined up for injection before reactor pressure drops to 300 psig.

Scenario **2** Day **0** (Continued)

Crew Turnover:

Rx power is at 80% CTP.

SRMs 'F' is INOP and bypassed.

IRMs 'A' & 'H' are INOP and bypassed.

Appropriate clearances and LCOs are written.

Continue plant operations at rated conditions.

Need to shift Main Turbine EHC pumps to 'A' and 'C' operating and B in Standby.

Once EHC is transferred, raise reactor power to 90%. Reactor Engineering has determined power may be raised to 90% with NO restrictions per thermal limits.

Once power has been raised operate RCIC per EPI 04-1-03-E51-2. GETARS has been setup to run.

Chemistry and Radiation Protection personnel have been notified of the power change and operation of RCIC.

Plant EOOS is 10.0 GREEN.

There are scattered thunderstorms reported in the Tensas Parish area.

Simulator Setup: (Scenarios may be setup and shot into encrypted ICs and Password protected.)

Start the process from a new simulator load.
Reset to IC-17.

Verify or perform the following:

IC: 17

OOS: IRMs A & H (Place in Bypass w/ Caution tag)
SRMs F (Place in Bypass w/ Caution tag)

Active malfunctions: **c51002f** SRM F incorporated into present simulator load
c51005a IRM A incorporated into present simulator load
c51005h IRM H incorporated into present simulator load

Active Remote Functions: None

Active Case File: None

Active overrides: None

Pending Remote Function: **z300_2635b_BYPASS** LPRM 26-35 B bypassed on APRM B (TRG 4)

Pending malfunctions: **rm157a_0** Main Steam Line Radiation Monitor fails downscale (TRG 1)
e51046 RCIC Overspeed trip on E51-F045 opening (TRG 2)
c51008_2635b LPRM 26-35 level B failed downscale (TRG 3)
z021021_60_41 Control Rod 60-41 drift in (TRG 5)
fw163c@8% Main Condenser Vacuum leak (TRG 6) **ramp to 40% on Reactor Scram** (TRG 7)
r21135 Loss of Offsite Power on Main Generator Trip (TRG 8)
n41141c Diesel Generator 13 Trip (TRG 8)

Pending component malfunctions: None

Trigger files: Trigger 1 MSL Rad Monitor failure downscale
Trigger 2 RCIC Overspeed Trip
Trigger 3 LPRM Failed Downscale
Trigger 4 LPRM Bypassed
Trigger 5 Control rod drift in

Trigger 6	Loss of Condenser Vacuum
Trigger 7	Complete loss of Condenser Vacuum
Trigger 8	Loss of Offsite Power/DG 13 Trip

IRMs A and H, SRMs F are bypassed in the IC setup for Cycle 15.

Verify or perform the following:

Startup all PDS / SPDS screens. Clear any graphs and trends off of SPDS.

Setup the presently used cyclops display and verify it is functional.

Ensure the correct startup sequence is available at the P680 for the present IC.

Install turnover guide, red tag, and LCO paperwork as applicable.

Advance all chart recorders and ensure all pens are inking properly.
(APRM chart recorders must be turned on and settings for scales on pens 0 – 125 scale)

Place tags on IRM A & H and SRMS F Joysticks.

SIMULATOR OPERATION SCENARIO 2

Once simulator is reinitialized and setup complete take the simulator out of Freeze.

Once the Crew has taken control note the simulator time.

Shift EHC Pumps

The operator will start EHC Pump A and secure EHC Pump B and place EHC B in Standby. per SOI 04-1-01-N32-1.

Cues:

If asked, report as Turbine Building Operator pre-start checks are complete for EHC Pump A.

Raise Reactor Power using Recirc Flow.

The SS will perform a Reactivity Brief.

The RO will raise Reactor Power using Recirc Flow Control Valves.

The BOP operator will follow power on Main Generator Load Demand.

Start RCIC/Trip of RCIC

The operator will start RCIC per EPI 04-1-03-E51-2, **TRIGGER 2 should activate when E51-F045 opens (RCIC Overspeed trip).**

Cue:

If asked, report as Auxiliary Building Operator that RCIC Overspeed Trip mechanism will not reset.

The SS should review the Tech Specs for TS 3.5.3 Condition A.

One minute after the Tech Spec determination briefing, **activate Trigger 1 (MSL Rad Monitor failed).**

Main Steam Line Radiation Monitor failure

The crew should respond to the MSL Radiation Monitor downscale annunciator.

The SS should dispatch I&C to investigate the cause of the downscale.

The SS should consult the Tech Spec Loop Logics and TRM TR3.3.6.1 and Table TR3.3.6.1-2 for Condition A.

Cue:

> **When asked as I&C, Main Steam Line Radiation monitor is failed downscale and will require a work order for further troubleshooting.**

One minute after TRM determination, **activate TRIGGER 5 (Control Rod drift)**.

Control Rod Drift

Control Rod 60-41 will begin to drift inward.

The RO will receive annunciators indicating the Control Rod drift and identify the drifting control rod and attempt to insert the control rod to position 00.

The SS should dispatch operators to isolate the drifting control rod.

Cues:

> **If asked, as Auxiliary Building Operator isolate control rod 60-41QK.**

Simulator operator remove malfunction.

> **If asked, report as Reactor Engineering reviews will need to be performed to determine impact.**

The SS should be determining based on indications the applicability of Tech Spec 3.1.3.

One minute after the Tech Spec determination is complete, **activate TRIGGER 5 (LPRM failed downscale).**

LPRM Failed Downscale

The Crew should recognize alarms for LPRM downscale.

The RO will determine the failed LPRM is 26-35 level B.

The crew should determine the failed LPRM is assigned to APRM B.

Cue:

If asked, report as Reactor Engineering there are no other LPRMs bypassed.

On directions activate trigger 4 to bypass LPRM 26-35 B.

The SS should review Tech Specs for TS 3.3.1.

The RO should reset the drift once the HCU is isolated to allow the control rod to settle and be able to clear the Control Rod Drift annunciator.

One minute after the Tech Spec determination and HCU is isolated, **activate TRIGGER 6 (loss of Condenser Vacuum).**

Loss of Main Condenser Vacuum.

Crew will respond to annunciators and implement actions of ONEP 05-1-02-V-8.

The BOP and RO should monitor the rate of Condenser vacuum loss.

The SS should reduce Reactor Power using Recirc Flow.

The SS should determine a point on lowering condenser vacuum when the Unit should be scrammed.

Main Turbine Trip 21 inches Hg

Reactor Feed Pump Turbine Trip 16 inches Hg (may be overridden per SS)

Main Steam Bypasses close 12 inches Hg

Main Steam Isolation Valves close 9 inches Hg

Cues:

If dispatched, report as Turbine Building Operator a high pitched whistling sound coming from the vicinity of the Turbine Building Steam tunnel are on 133 Ft.

Reactor Scram and Loss of Offsite Power

When the Reactor Scrams, the Main Condenser vacuum leak will become worse. (Trigger 7)

When the Main Generator Trips, Offsite power will trip and Diesel Generator 13 will trip on initiation. (Trigger 8)

The SS should prioritize actions to maintain Reactor Pressure and Level with minimal systems available.

The SS should contact the Entergy System dispatcher to determine when Offsite Power is to be restored.

Cue:

> **When dispatched report as Outside operator, unknown cause for HPCS Diesel Generator trip.**

Possible EOP attachments when requested.

Attachment 12 Defeat SDC interlocks 4 minutes to DONE

Attachment 25 RPV makeup with Condensate Transfer

Attachment 26 RPV makeup with Fire Systems

Attachments 25 (Condensate Transfer) and 26 (Fire Water) can not be installed by any remote functions just acknowledge the request.

TERMINATION

Once Reactor level is being restored with Low Pressure ECCS.

Critical Tasks

- When level drops to <-191 inches or after level drops between TAF and – 191 inches, opens at least seven SRVs before level drops to – 212 inches. Pumps must be running and lined up for injection before reactor pressure drops to 300 psig.

Emergency Plan Procedure – Emergency Action Level Classification

Alert based on 10-S-01-1 Attachment II FS1 Loss or Potential loss of any two fission product barriers.

Appendix D | Operator Actions | Form ES-D-2

Op-Test No.: _____ Scenario No.: __2___ Event No.: ___1__

Event Description: **Shift EHC pumps (SOI 04-1-01-N32-1)**

Time	Position	Applicant's Actions or Behavior
	RO	Start EHC Pump A (SOI 04-1-01-N32-1)
	RO	Secure EHC Pump B and place in Standby

Op-Test No.: _____ Scenario No.: __2___ Event No.: ___2__

Event Description: **Raise Reactor Power using Reactor Recirc Flow. (IOI 03-1-01-2)**

Time	Position	Applicant's Actions or Behavior
	SS	Conducts Reactivity Brief
	RO	Raises Reactor Recirc Flow to raise Reactor Power.
	BOP	Monitors Pressure, Level, Power, and Turbine Loading.

Appendix D | Operator Actions | Form ES-D-2

Op-Test No.: _____ Scenario No.: __2__ Event No.: __**3**___ (Cont.)

Event Description: **Start RCIC and respond to RCIC Overspeed Trip.**
(EPI 04-1-03-E51-2 and ARI 04-1-02-1H13-P601; TS 3.5.3)

Time	Position	Applicant's Actions or Behavior
	BOP	Starts RCIC per EPI and recognizes trip of RCIC on overspeed.
	SS	Determines actions per Tech Spec 3.5.3 for RCIC inoperable.
	SS	Dispatches operator and maintenance personnel to investigate RCIC Trip.

Op-Test No.: _____ Scenario No.: __2__ Event No.: __**4**___ (Cont.)

Event Description: **Respond to Main Steam Line Radiation Monitor failure.**
(ARI 04-1-02-1H13-P601; TR 3.3.6.1)

Time	Position	Applicant's Actions or Behavior
	BOP	Responds to Main Steam Line Radiation Monitor downscale annunciator.
	BOP	Determines Main Steam Line Radiation Monitor is failed.
	SS	Determines actions per TR 3.3.6.1 Condition A 1 LPRM inoperable.

	SS	Dispatches I&C to investigate failure.

Appendix D | Operator Actions | Form ES-D-2

Op-Test No.: _____ Scenario No.: __2__ Event No.: __**5**___ (Cont.)

Event Description: **Respond to drifting control rod (60-41).**
(ARI 04-1-02-1H13-P680; ONEP 05-1-02-IV-1; TS 3.1.3)

Time	Position	Applicant's Actions or Behavior
	RO	Responds to drifting Control Rod and identifies Control Rod 60-41 QK as drifting inward and applies continuous insert signal to control rod and inserts the control rod to 00.
	SS	Dispatches operator to isolate the HCU for Control Rod 60-41 QK.
	RO	Resets Control Rod Drift annunciator and indications.
	SS	Determines applicability of Tech Spec 3.1.3.

Appendix D | Operator Actions | Form ES-D-2

Op-Test No.: _____ Scenario No.: __2__ Event No.: __6___ (Cont.)

Event Description: **Respond to LPRM failure.**
(ARI 04-1-02-1H13-P601; 17-S-02-40; TS 3.3.1)

Time	Position	Applicant's Actions or Behavior
	BOP	Responds to LPRM downscale annunciator.
	RO	Determines using Full Core Display LPRM string 26-35 has the failed LPRM and selects an adjacent control rod and determines level B is failed downscale.
	SS/ BOP	Determines LPRM 26-35 level B is assigned to APRM B and LPRM may be bypassed using 17-S-02-40.
	RO	Bypasses APRM B to facilitate bypassing LPRM and returns to normal once bypassed.
	SS	Determines TS 3.3.1 is met.
	SS	Dispatches I&C personnel to investigate LPRM failure.

Appendix D | Operator Actions | Form ES-D-2

Op-Test No.: _____ Scenario No.: __2___ Event No.: ___7__

Event Description: **Loss of Main Condenser Vacuum (ONEP 05-1-02-V-8)**

Time	Position	Applicant's Actions or Behavior
	BOP	Responds to annunciator for Offgas Panel Trouble and determines Offgas flow is elevated.
	RO	Monitors Main Condenser Vacuum and determines it is degrading.
	SS	Orders lowering of Reactor Power per ONEP to 67 Mlbm/hr.
	RO	Lowers Reactor Power using Reactor Recirc Flow and plots Power to Flow in the Monitored Region of Power to Flow Map.
	SS	Dispatches personnel to investigate the leak.
	SS	Determines point at which the Reactor will be scrammed on Loss of Condenser Vacuum
	RO	When Main Condenser Vacuum degrades to point the SS specifies, manually scrams the reactor.
	RO	Makes Scram Report to include status of Main Steam Bypass valves and Reactor Feed Pumps.

Appendix D | Operator Actions | Form ES-D-2

Op-Test No.: _____ Scenario No.: __2___ Event No.: ___8__

Event Description: **Respond to Loss of Offsite Power and failure of Diesel Generator 13 (ONEP 05-1-02-I-4; 05-1-01-EP-2 & 3)**

Time	Position	Applicant's Actions or Behavior
	RO/BOP	Report loss of Offsite Power and determine NO offsite power is available.
	BOP	Assess and report the status of Emergency Diesel Generators (Divisioin 3 DG tripped. Division 1 and 2 carrying buses)
	RO/BOP	Reports status of ECCS Systems. LP ECCS available, RCIC tripped, HPCS no power.
	SS	Assigns responsibility of RPV Level and Pressure control and assigns bands of operation.
	RO/BOP	Monitors assigned parameters.
	SS	Orders CRD maximized for flow.
	RO/BOP	Aligns CRD for Maximum flow
	SS	Orders SLC injection (optional).
	RO/BOP	Injects SLC (optional)
	SS	Dispatches personnel to setup Nitrogen for ADS valve operation.

	SS	Contacts Load Dispatcher to determine when Grid will be restored.

Appendix D | Operator Actions | Form ES-D-2

Op-Test No.: _____ Scenario No.: __2___ Event No.: ___8__ (Cont)

Event Description: **Respond to Loss of Offsite Power and failure of Diesel Generator 13 (ONEP 05-1-02-I-4; 05-1-01-EP-2 & 3)**

Time	Position	Applicant's Actions or Behavior
	SS **	Orders alignment of Low Pressure ECCS for injection to the Reactor.
	BOP/RO **	Align Low Pressure ECCS for injection.
	SS **	If Reactor Level drops below – 160 inches, orders Emergency Depressurization with 8 SRVs (at least 5 SRVs should be open)
	BOP/RO **	On orders, opens 8 SRVs using handswitches (initiation pushbuttons may be used initially, however should be followed with handswitches.) SRVs B21-F047A and B21-F051B will fail to open. ONLY 6 SRVs are open.
	BOP/RO **	Opens two non-ADS SRVs to make 8 SRVs open (minimum is one other to meet 7 SRVs per EOP-2 step ED-5.
	BOP/RO	Verifies injection to the RPV with Low Pressure ECCS.
	BOP/RO	Restores level using LP ECCS with band of +30 inches to -30 inches Wide Range.

** Critical task

Appendix D | Scenario Outline | Form ES-D-1

Facility: **GRAND GULF NUCLEAR STATION** Scenario No.: **3** Op-Test No.: **Day 0**

Examiners: _____ Operators: _____
_____ _____
_____ _____

Objectives: To evaluate the candidates' ability to operate the facility in response to the following evolutions:

1. Insert control rods to lower reactor power per control rod movement plan.
2. Respond to a failure of RPS MG 'B' per Loss of One or Both RPS Busses ONEP.
3. Respond to trip of SBGT 'A'.
4. Downshift Reactor Recirc Pumps to Slow Speed.
5. Take actions to mitigate a large break failure of Feedwater piping in the Drywell per EOPs. (LOCA is NOT severe enough to result in depressurization of RPV.)
6. Respond to a steam leak on RCIC when initiated.

Initial Conditions: Reactor Power is at 53 %. Plant shutdown is in progress in preparation for an outage. Reactor Recirculation pumps in Fast Speed; a single Reactor Feed Pump in Three element Master Level Control; one Heater Drain Pump is pumping forward.

INOPERABLE Equipment

SRM 'F' are INOP and bypassed.
IRMs 'A' & 'H' are INOP and bypassed.
APRM 'H' is INOP due to a failed FCTR card.
HPCS Pump is tagged out of service for failure of the Jockey Pump.
ESF 12 Transformer is tagged out of service for maintenance.
RPS 'A' is on Alternate Power due to EPA circuit breaker failure.
SBGT 'A' is operating for surveillance.
Appropriate clearances and LCOs are written.

Turnover: Continue plant shutdown per IOI-2. There are scattered thunder showers reported in the Tensas Parish area.

Event No.	Malf. No.	Event Type*	Event Description
1		R (RO)	Lower Reactor power using control rods to 60 – 75% rod line. (Control Rod Movement Sequence)

2		N (RO)	Transfer Reactor Recirc Pumps to Slow Speed (SOI 04-1-01-B33-1)
3	**1**	C (RO) TS (SS)	Respond to RPS Motor Generator 'B' trip. (ONEP 05-1-02-III-2). Complete **Technical Specification/FSAR** determination.

Scenario **3** Day **0** (Continued)

Event No.	Malf. No.	Event Type*	Event Description
4	**2**	C (BOP) TS (SS)	Respond to trip of SBGT 'A' trip. (ARI 04-1-02-1H13-P870 2A-A2) Complete **Technical Specification** determination.
5	**3**	M (ALL)	Respond to indications of large break LOCA on Feedwater Line 'A' per EOPs. (B21-F065A will close if attempted.)
	4	C (BOP)	RCIC steam leak will isolate by manual means.

* (N)ormal, (R)eactivity, (I)nstrument, (C)omponent, (M)ajor

Critical Tasks

- Lower RPV Pressure to facilitate restoration of RPV Level using Condensate/Feedwater or ECCS.
- Isolate RCIC following EP-4 entry due to steam leak.

Scenario **3** Day **0** (Continued)

Crew Turnover:

Rx power is at 53% CTP.

The plant is lowering power in preparation for an outage.

Reactor Recirculation Pumps are operating in Fast Speed.

The 'A' Reactor Feed Pump is operating in Three Element Master Level Control.

Circ Water is in Single Pump Dual Train 'A' Pump in service.

SRMs 'F' is INOP and bypassed.

IRMs 'A' & 'H' are INOP and bypassed.

APRM 'H' is failed due to a failed FCTR card and bypassed.

ESF 12 Transformer is tagged out of service for maintenance.

RPS 'A' is on Alternate Power due to an EPA circuit breaker failure.

SBGT 'A' is operating for surveillance 06-OP-1T48-M-0001 holding at step 5.2.11 allowing the System Engineer to obtain data.

Hpcs Pump and Jockey Pump are out of service due to the Jockey Pump motor burned up.

Appropriate clearances and LCOs are written.

Continue plant shutdown to less than 75% Rod Line to Downshift Reactor Recirc Pumps.

At step 8.4 of IOI-2 Attachment IV.

BOC Shutdown Sequence Sheet Step 5.

Plant EOOS is 7.3 YELLOW.

Hydrogen Water Chemistry and Alternate Cooling Tower are secured.

Surveillance 06-RE-1J11-V-002 is complete.

There are scattered thunderstorms reported in the Tensas Parish area.

Simulator Setup: (Scenarios may be setup and shot into encrypted ICs and Password protected.)

Start the process from a new simulator load.
Reset to IC-13.

Verify or perform the following:

IC: 13

OOS: APRM H (Place in Bypass w/ Caution tag)
IRMs A & H (Place in Bypass w/ Caution tag)
SRMs F (Place in Bypass w/ Caution tag)
RPS A (Transfer to Alternate Power and reset RPS A w/ Caution tag)
Manually Initiate SBGT A
HPCS and HPCS Jockey Pump OOS (Place HPCS OOSVC to OOSVC and place tags on HPCS Pump and Jockey Pump HS)
ESF XFMER 12 (Place tag on J3885, 152-1903, 152-1904, 152-1905, 152-1511, 152-1611, 152-1704 HS)

Active malfunctions: **c51002f** SRM F incorporated into present simulator load
c51005a IRM A incorporated into present simulator load
c51005h IRM H incorporated into present simulator load
c71077a RPS A MG failure (Normal EPA OOS)

Active Remote Functions: **c51262** APRM H Function Switch to **STDBY**
p81218 J3885 115KV Disconnect **OPEN**
e22644 HPCS Pump BKR **OUT**
e22646 HPCS JKY pump breaker **OPEN**
152-1511 **lo_1r21m601a_g** Bus 15AA FDR FM ESF XFMR 12 **OFF**
di_1r21m601ap864/01c Bus 15AA FDR FM ESF XFMR 12 **TRIP**
152-1611 **lo_1r21m601b_g** Bus 16AB FDR FM ESF XFMR 12 **OFF**
di_1r21m601bp864/02c Bus 16AB FDR FM ESF XFMR 12 **TRIP**
152-1704 **lo_1e22m709_g** 17AC FDR FM ESF 12 **OFF**
di_1e22m709p601/16c 17AC FDR FM ESF 12 **OFF**
152-1903 **lo_1r21m623_g** Bus 15AA/16AB/27AC FDR FM ESF XFMR 12 **OFF**
di_1r21m623p807/01c Bus 15AA/16AB/27AC FDR FM ESF XFMR 12 **TRIP**
152-1904 **lo_1r21m624_g** Bus 17AC/25AA/26AB FDR FM ESF XFMR 12 **OFF**
di_1r21m624p807/01c Bus 17AC/25AA/26AB FDR FM ESF XFMR 12 **TRIP**

152-1905 lo_1r21m637_g SWYD XFMR T3 FDR FM ESF XFMR 12 **OFF**
di_1r21m637p807/01c SWYD XFMR T3 FDR FM ESF XFMR 12 **TRIP**

Active Case File: **cae sgtsai.cae** SBGT A operating for surveillance

Active overrides: None

Pending overrides: remote function **e51319** Failure to isolate RCIC
remote function **e51320** Failure to isolate RCIC

Pending malfunctions: **c71077b** RPS MG failure (TRG 2)
t48d001a_a SBGT A Filter Train Fan trip (TRG 3)
fw171a@100% Feedwater Line 'A' break in Drywell (TRG 5)
rr063a@4.6% Recirc line 'A' leakage to simulate Feedwater Check Valve leakage **ramp 1% to 4.6% over 2 minutes** (TRG 5)
e51050@50% RCIC Steam line rupture five minutes after Feedwater failure (TRG 5) RCIC will fail to automatically isolate.

Pending component malfunctions: None

Trigger files: Trigger 2 RPS B MG Failure
Trigger 3 SBGT A Trip
Trigger 5 Feedwater Line 'A' rupture in Drywell w/ RCIC Steam leak

COMPONENT	PANEL	INDICATION or CONTROL	SIMULATOR CODE	STATUS	DONE
APRM H			c51262	STDBY	
HPCS PUMP	P601-16C		e22644_OUT	OUT	
HPCS Jockey Pump	P601-16C		e22646_OPEN	OPEN	
RPS A on Alternate	P610	Handswitch	c71077a	ALT	
152-1511	P864-1C	Green light	lo_1r21m601a_g	OFF	
	P864-1C	Handswitch	di_1r21m601a	STOP	
152-1611	P864-2C	Green light	lo_1r21m601b_g	OFF	
	P864-2C	Handswitch	di_1r21m601b	STOP	
152-1704	P601-16C	Green light	lo_1e22m709_g	OFF	
	P601-16C	Handswitch	di_1e22m709	STOP	
152-1903	P807-1C	Green light	lo_1r21m623_g	OFF	
	P807-1C	Handswitch	di_1r21m623	STOP	
152-1904	P807-1C	Green light	lo_1r21m624_g	OFF	

	P807-1C	Handswitch	di_1r21m624	STOP	
152-1905	P807-1C	Green light	lo_1r21m637_g	OFF	
	P807-1C	Handswitch	di_1r21m637	STOP	
J3885 115 KV Disconnect	P807-1C	Green Light	p81218	OPEN	

Bypass Division 2 APRM Bypass Joystick to APRM H position.

IRMs A and H, SRMs F are bypassed in the IC setup for Cycle 15.

Verify or perform the following:

Verify Reactor Power is above the 75% rod line.

Open Circuit Breakers 152-1903, 1904, 1905, 1511, 1611, and 1704

Place HPCS OOSVC handswitch to OOSVC.

Place RPS A on Alternate Power and RESET RPS A logic on P680.

Verify SBGT A is operating.

Startup all PDS / SPDS screens. Clear any graphs and trends off of SPDS.

Setup the presently used cyclops display and verify it is functional.

Ensure the correct startup sequence is available at the P680 for the present IC.

Install turnover guide, red tag, and LCO paperwork as applicable.

Advance all chart recorders and ensure all pens are inking properly.
(APRM chart recorders must be turned on and settings for scales on pens 0 – 125 scale)

Place tags on ALL circuit breakers associated with the ESF 12 Transformer outage.

Place tags on APRM H, IRM A & H and SRMS F Joysticks.

Place tags on HPCS Pump and Jockey Pump handswitches.

Place a Caution tag on RPS B Power Handswitch on P610.

SIMULATOR OPERATION SCENARIO 3

Once simulator is reinitialized and setup complete take the simulator out of Freeze.

Once the Crew has taken control note the simulator time.

Lower Reactor Power using Control Rods

This step will lower Reactor Power to below the 75% Rod Line per IOI-2 Step 8.4.

Set FCBB less than 1.0 using Remote Function cy_fcbb after crew inserts the first gang of control rods.

Crew will review procedures for lowering power using control rods.

Cues:

If asked, report as Reactor Engineer – follow the instructions in the front of the Control Rod Movement Sequence.

Adjust APRM gains using remote function c51299 as requested.

Place FCTR cards in SETUP using remote function c51310 as requested.

Recirc Pump Downshift to Slow Speed

Once power is below the 75% rod line, the crew is ready per the IOI step 8.4 to downshift Reactor Recirc Pumps to Slow Speed per SOI 04-1-01-B33-1 section 4.3.

Cue:

As Turbine Building Operator report the pre-start checks on the LFMG are complete.

Simulator Operator: FCTR to SETUP is Remote Function c51310.

RPS Motor Generator B trip

Once Recirc Pumps are in slow speed per SOI and the Lead Examiner concurs, **activate TRIGGER 2.**

Respond to RPS B Motor Generator trip per ONEP 05-1-02-III-2, Loss of One or Both RPS Buses.

Cue:

> **When asked, report as Control Building Operator, RPS MG B tripped and is extremely hot to the touch.**
>
> **If asked report as Auxiliary Building Operator, HCU accumulators for 12-13; 12-53; 20-05; and 20-61 are at 1800 psig.**
>
> **If dispatched report as Turbine Building Operator, RPS Motor Generator 'B' circuit breaker 52-142229 is in the Trip Free condition.**

RPS B **CANNOT** be transferred to the Alternate Power Source per the SOI Precautions and Limitations (04-1-01-C71-1 section 3.5) due to FSAR 8.3.1.1.5.4 commitment. The FSAR is an appendix of the GGNS Operating License. Tech spec 3.3.8.2 is not applicable. HCU Alarm Instrumentation alarm with RPS 'B' de-energized is sealed in on HCUs 12-13; 12-53; 20-05; and 20-61. This means TRM 3.1.5 Conditions A and B are applicable.

Cue:

> **When asked, as Duty Manager continue plant shutdown with the half scram signal, I'll discuss with Plant Licensing the options concerning RPS.**

Crew will have to live with a half scram signal the SS should brief the crew accordingly on contingencies.

SBGT A Fan trip

Two minutes after the Tech Specs/FSAR briefing have been identified, **activate TRIGGER 3.**

Standby Gas Treatment Exhaust Fan A will trip.

The BOP operator will have to realign Auxiliary Building Ventilation.

Cues:

If asked, respond as the Auxiliary Building Operator to investigate the SBGT A Exhaust Fan Trip.

Report as the Auxiliary Building Operator that the fan motor is hot to the touch and breaker 52-151117 for T48-D001A SBGT A Exhaust Fan is in the Trip Free condition on bus MCC 15B11.

The SS should direct restoration of Auxiliary Building Ventilation per the SOI 04-1-01-T48-1 section 5.3.

The SS should review Tech Spec 3.6.4.3.

Cues:

As asked, assist in the restoration of systems.

Cue: If contacted, as Assistant Operations Manager –Shift or Duty Manager instruct the shift to continue plant shutdown.

Feedwater rupture in the Drywell

Once the Reactor Recirc Pumps are in slow speed and the Lead Evaluator concurs, **activate TRIGGER 5.**

The reactor will scram on Drywell pressure and will continue to rise from the Feedwater Line Break.

B21-F065A Feedwater Isolation Valve will close when the operator gives it the signal to close.

RCIC can be used to inject to the reactor via Feedwater line B.

Recirc loop leakage simulating check valve leakage will ramp rr063b to 4.6% over 2 minutes.

MSIVs will close due to loss of both RPS buses.

Five minutes after the Feedwater rupture, RCIC will have a steam leak due to packing problems in the RCIC Room. RCIC will fail to automatically isolate on high temperatures, but the operator can manually isolate the system from H13-P601.

Crew will implement actions of EP-2 and EP-3, EP-4 when RCIC Steam Leak occurs.

After the LOCA is detected, perform the following attachments when requested.

Attachment 12 Defeat SDC interlocks 4 minutes to DONE

Attachment 12 for RHR 'B' can be of use.

EP Attachments which may be requested:

Attachment 8 Defeat MSIV isolations 9 minutes to DONE

If Attachment 8 is requested early by itself - 3 minutes to DONE

RCIC will be initially available until the time of the steam leak.

RHR 'A' Shutdown Cooling line are not available due to the 'A' Feedwater Line break.

Once RCIC is isolated RPV pressure must be lowered to facilitate injection of Low Pressure ECCS or Condensate.

Once B21-F065A is closed Condensate and Feedwater can be restored through the 'B' Feedwater injection line and level restored. To inject Reactor Pressure will have to be lowered to use Condensate Booster Pumps.

Attachments 25 (Condensate Transfer) and 26 (Fire Water) can not be installed by any remote functions just acknowledge the request.

TERMINATION

Once Reactor level is being restored with Condensate/Feedwater or Low Pressure ECCS and the Lead Evaluator concurs the scenario may be terminated.

Critical Tasks

- Lower RPV Pressure to facilitate restoration of RPV Level using Condensate/Feedwater or ECCS.
- Isolate RCIC following EP-4 entry due to steam leak.

Emergency Plan Procedure – Emergency Action Level Classification

Alert based on 10-S-01-1 Attachment I FA1 RCS loss.

Op-Test No.: _____ Scenario No.: __**3**___ Event No.: ___**1**__

Event Description: **Lower Reactor Power using control rods to below 75% rod line.**
(Control Rod Movement Sequence Sheet)

Time	Position	Applicant's Actions or Behavior
	SS	Conduct reactivity manipulation brief.
	RO	Inserts control rods in individual or gang per control rod movement sequence sheet to lower power to below the 75% rod line.
	BOP	Assists RO in Control Rod selection verification, monitors Pressure, Level, Power, and Turbine Loading.

Op-Test No.: _____ Scenario No.: __**3**___ Event No.: ___**2**__

Event Description: **Downshift Reactor Recirc pumps to slow speed.**
(SOI 04-1-01-B33-1)

Time	Position	Applicant's Actions or Behavior
	SS	Performs Reactivity Briefing.
	RO	Downshifts Reactor Recirc Pumps to Slow Speed. Closes Recirc FCV A and B to MIN ED position. Verifies parameters for downshift. Depresses both Trans to LFMG pushbuttons and verifies Recirc Pump Circuit Breaker operation. Opens Recirc FCV A and B to maximum position. Adjusts tap settings on BOP Transformers 11B and 12B.

Op-Test No.: _____ Scenario No.: __3__ Event No.: __**3**___

Event Description: **Respond to RPS Motor Generator B trip.**
(ONEP 05-1-02-III-2 and SOI 04-1-01-C71-1)

Time	Position	Applicant's Actions or Behavior
	RO	Responds to Half Reactor Scram and HCU Trouble annunciators. (ARI 04-1-02-1H13-P680)
	RO	Identifies the control rod HCUs 12-13, 12-53, 20-05, 20-61 have trouble alarms and are associated with RPS B power.
	BOP	Responds to H13-P610 to determine the loss of RPS B normal power supply and the Alternate Power for RPS B is available
	BOP	Verifies RPS A is on its Alternate Power Source.
	SS	Reviews Precautions and Limitations of SOI 04-1-01-C71-1 and ONEP 05-1-02-III-2 and determines RPS B must remain de-energized. (FSAR 8.3.1.1.5.4) Tech Spec 3.3.8.2 is NOT applicable. TR 3.1.5 Conditions A & B are applicable due to loss of ability to monitor HCU Fault Instrumentation for alarms on four HCUs 12-13, 12-53, 20-05, 20-61.
	SS	Consult with Duty Manager concerning operating with HALF scram due to loss of RPS bus.
	SS	Briefs Crew on contingencies and situation of operating with a half scram.

Op-Test No.: _____ Scenario No.: __**3**___ Event No.: ___**4**__

Event Description: **Respond to Standby Gas Treatment A Exhaust Fan Trip (ARI 04-1-02-1H13-P870; SOI 04-1-01-T48-1)**

Time	Position	Applicant's Actions or Behavior
	BOP	Responds to SGTS FLTR TR A FAN PROT TRIP alarm. (ARI 04-S-02-1H13-P870 2A-A2)
	SS	Dispatches an operator to SBGT Train A to investigate problem.
	SS/BOP	Determine the circuit breaker number for T48-D001A 52-151117. The Operator will report the circuit breaker is TRIP FREE.
	SS	Direct restoration of Auxiliary Building Ventilation to normal.
	BOP	Restores Auxiliary Building Ventilation to normal using Surveillance 06-OP-1T48-M-0001 or SOI 04-1-01-T48-1
	SS	Determines Tech Spec actions for failed SBGT Train. (Tech Spec 3.6.4.3 Condition A restore within 7 days)

Op-Test No.: _____ Scenario No.: __3__ Event No.: __5___

Event Description: **Feedwater Rupture in the Drywell with leakage past check valves from the Reactor / RCIC Steam leak.**

(EOP 05-S-01-EP-2; 05-1-01-EP-3 and 05-1-01-EP-4)

Time	Position	Applicant's Actions or Behavior
	RO	Recognizes scram on High Drywell Pressure/Low Reactor Water level and performs the immediate actions for Reactor Scram.
	RO	Recognizes loss of ability to feed the reactor with Condensate and Feedwater. Communicates the loss to the SS. Depending on conditions, RO may recognize which feed line has rupture. Indications on H13-P680 section 2B indicators: A FW FLO C34-R604A upscale B FW FLO C34-R604B downscale A FW FLO C34-FR-R616 Blue Pen upscale B FW FLO C34-FR-R616 Red Pen downscale
	RO	Secures the Condensate and Feedwater Systems by tripping all operating pumps and attempt to isolate the affected Feedwater line by closing B21-F065A Feedwater Inlet Shutoff Valve on H13-P680 section 2C.
	SS	Enters EP-2 and EP-3, orders the BOP Operator to initiate RCIC (HPCS is tagged out).
	BOP or RO	Verifies/initiates RCIC (If RO/SS determine which Feedwater Line is ruptured allows injection of RCIC due to it injects via the unaffected Feedwater line.) Level band should be +30 to -30 inches.

Op-Test No.: _____ Scenario No.: __3__ Event No.: __5___ (Cont.)

Event Description: **Feedwater Rupture in the Drywell with leakage past check valves from the Reactor / RCIC Steam leak.**

(EOP 05-S-01-EP-2; 05-1-01-EP-3 and 05-1-01-EP-4)

Time	Position	Applicant's Actions or Behavior
	SS	Orders CRD maximized and possible initiation of SLC. (Optional)
	RO/BOP	Maximizes CRD for FLOW per operator aid.
	SS	Dispatches EP Attachments to be installed Attachment 12 RHR through Shutdown Cooling (May note not to perform for RHR 'A') Attachment 25 Condensate Transfer injection Attachment 26 Fire Water injection
	RO/BOP	Reports the isolation of B21-F065A allowing the restoration of Condensate and Feedwater for injection to the reactor vessel.
	SS **	Orders restoration of Condensate and Feedwater for RPV level control using the Startup Level Control Valve through the 'B' Feedwater Line with a Normal RPV Level Band (+11.4 to 53.5 inches). If +30 inches to -30 inches band was already ordered may remain with this band.
	RO **	Aligns Condensate and Feedwater for injection to the RPV through 'B' Feedwater Line using one or two Condensate and Condensate Booster Pumps through the Startup Level Control Valve.
	SS	Orders reduced Pressure Band 400-600 psig to allow injection using Condensate and Condensate Booster Pumps.
	BOP/RO	Lowers Reactor pressure to a band of 400 – 600 psig to allow Condensate and Condensate Booster Pumps to inject to the RPV.

** Critical Task

Op-Test No.: _____ Scenario No.: __3__ Event No.: __5___ (Cont.)

Event Description: **Feedwater Rupture in the Drywell with leakage past check valves from the Reactor / RCIC Steam leak.**

(EOP 05-S-01-EP-2; 05-1-01-EP-3 and 05-1-01-EP-4)

Time	Position	Applicant's Actions or Behavior
IF the closure of B21-F065A is not noted or accomplished, the following steps will be taken to restore RPV Level.		
	SS **	Orders alignment of Low Pressure ECCS for injection to the Reactor.
	BOP or RO **	Align Low Pressure ECCS for injection.
	SS **	If Reactor Level drops below – 160 inches, orders Emergency Depressurization with 8 SRVs (at least 5 SRVs should be open)
	BOP or RO **	On orders, opens 8 SRVs using handswitches (initiation pushbuttons may be used initially, however should be followed with handswitches.)
	SS **	If conditions require RPV Flooding, orders injection to attain RPV pressure 57 psig above Containment pressure
	BOP or RO	Verifies injection to the RPV with Low Pressure ECCS.
	RO	Restores level using LP ECCS with band of +30 inches to -30 inches Wide Range.

** Critical task

Op-Test No.: _____ Scenario No.: __3__ Event No.: __5___ (Cont.)

Event Description: **Feedwater Rupture in the Drywell with leakage past check valves from the Reactor / RCIC Steam leak.**

(EOP 05-S-01-EP-2; 05-1-01-EP-3 and 05-1-01-EP-4)

Time	Position	Applicant's Actions or Behavior
When RCIC Steam Leak occurs, the following actions will be taken.		
	BOP**	Reports RCIC Room Temperatures above isolation setpoint and failure of RCIC to isolate and isolates E51-F063 and F064.
	SS	Enters EP-4 to verify actions taken for breach of Primary Containment.
	SS	Orders restoration of Auxiliary Building, Containment and Drywell isolation valves.
	BOP	When ordered by SS, restores Auxiliary Building, Containment, and Drywell isolation (Instrument Air, Plant Service Water, and Drywell Chilled Water). (Attachment 7 of EP-1)

** Critical Task

Safety Function/Knowledge & Ability/10CFR 55.45 Cross Reference

Facility: **GRAND GULF NUCLEAR STATION** Scenario No.: **4** Op-Test No.: **backup**

Examiners: _____ Operators: _____
_____ _____
_____ _____

Objectives: To evaluate the candidates' ability to operate the facility in response to the following evolutions:

1. Start and parallel Division *3* Diesel Generator to Offsite.
2. Respond to a RFPT HPU Leak and subsequent RFPT Trip.
3. Respond to a Recirc FCV Runback and entry into regions of Power to Flow Map.
4. Insert Control Rods to exit undesired regions of Power to Flow Map.
5. Diagnose and respond to a Recirc Pump Seal Failure.
6. Respond to a *Steam* Line break in the Turbine Building and LOCA in the Drywell.
7. Respond to a failure of Division 2 ECCS to initiate.
8. Respond to a failure of 2 ADS SRVs to open.

Initial Conditions: Reactor Power is at 100 %.

INOPERABLE Equipment

SRM 'F' are INOP and bypassed.
IRMs 'A' & 'H' are INOP and bypassed.
APRM 'H' is INOP due to failed *downscale*.
HPCS Pump is tagged out of service for failure of the Jockey Pump.
ESF 12 Transformer is tagged out of service for maintenance.
RPS 'A' is on Alternate Power due to EPA circuit breaker failure.
SBGT 'A' is operating for surveillance.
Appropriate clearances and LCOs are written.

Turnover: Start and parallel Division *3* Diesel Generator with offsite for engineering testing. There are scattered thunder showers reported in the Tensas Parish area.

Scenario **4** Day **backup** (Continued)

Event No.	Safety function	K/A[1]	10CFR 55.45[2]	Event Type*	Event Description
1	6	264000 A4.01: 3.3/3.4 A4.02: 3.4/3.4 A4.04: 3.7/3.7 A4.05: 3.6/3.7	4, 5, 6	N (BOP)	Start and parallel Division *3* Diesel Generator. (SOI 04-1-01-*P81*-1)
2	2	259001 A2.01: 3.7/3.7 A4.04: 3.1/2.9 259002 A3.04: 3.2/3.2 A3.02: 3.4/3.4 A4.02: 3.7/3.6 295009 AA1.01: 3.9/3.9 AA1.02: 4.0/4.0 AA1.03: 3.0/3.1 AA2.02: 3.6/3.7	1, 2, 3, 4, 5	C (RO)	Respond to a leak on the Hydraulic Power Unit for RFPT 'A' and subsequent RFPT Trip. (ARI 04-1-02-1H13-P680; ONEP 05-1-02-V-6)
3	1	202002 A3.01: 3.6/3.4 A2.06: 3.3/3.3 202001 A1.08: 3.7/3.7 A3.06: 3.6/3.6	3; 4; 6; 7	C (RO) TS (SS)	Respond to Recirc Flow Control Valve runback and entry into undesirable regions of the Power to Flow Map (ARI 04-1-02-1H13-P680 and ONEP 05-1-02-III-3) Complete **Technical Specification** determination.

		A4.02: 3.5/3.4 G2.1.12: 4.0 (SS) 295001 AA1.01: 3.5/3.6 AA1.05: 3.3/3.3 AA2.01: 3.5/3.8			
4	1; 7	201005 A3.01: 3.5/3.5 A3.02: 3.5/3.5 A3.03: 3.4/3.3 A3.04: 3.3/3.3 A4.01: 3.7/3.7 A4.02: 3.7/3.7	1, 2, 3, 4, 5	R (RO)	Insert Control Rods to exit undesired regions of Power to Flow Map. (Control Rod Movement Sheet)

Scenario **4** Day **backup** (Continued)

Event No.	Safety function	K/A[1]	10CFR 55.45[2]	Event Type*	Event Description
5	5	202001 A1.09: 3.3/3.3 A1.10: 2.6/2.7 A2.10: 3.5/3.9 A4.10: 2.8/2.8 A4.11: 3.2/3.3 G2.1.12: 4.0 (SS) 295010 AA1.02: 3.6/3.6 AA1.06: 3.3/3.5 AA2.01: 3.4/3.8 AA2.02: 3.8/3.9	3; 4;	TS (SS)	Respond to Recirc Pump Seal Failure. (ARI 04-1-02-1H13-P680) Complete **Technical Specification** determination.
6	2	239001 A2.11: 4.1/4.3 295009 AA1.01: 3.9/3.9 AA1.02: 4.0/4.0 AA2.01: 4.2/4.2 295031 EA1.01: 4.4/4.4 EA1.03: 4.4/4.4 EA1.05: 4.3/4.3 EA1.06: 4.4/4.4 EA1.07:	3, 6; 7	M (ALL)	Respond to indications of large break LOCA on Steam Line in the Turbine Building with Recirc Pump Seal Failure to extreme.

		3.7/3.7 EA1.10: 3.6/3.7 EA1.13: 4.3/4.3 EA2.01: 4.6/4.6 EA2.03: 4.2/4.2 EA2.04: 4.6/4.8			
	2	203000 A2.10: 3.3/3.5 A2.14: 3.8/3.9 A3.08: 4.1/4.1 A4.05: 4.3/4.1 A4.01: 4.3/4.1 A4.02: 4.1/4.1 A4.09: 4.1/4.0	3; 4; 6; 7	I (BOP)	Respond to a failure of Division 2 ECCS to initiate.
	3	218000 A3.01: 4.2/4.3 A4.01: 4.4/4.4 239002 A4.01: 4.4/4.4	3; 5; 6; 7	C (BOP)	Respond to a failure of 2 ADS SRVs to open.

* (N)ormal, (R)eactivity, (I)nstrument, (C)omponent, (M)ajor

[1] K/A G2.1.2: 3.0/4.0 Operator Responsibilities; G2.1.17: 3.5/3.6 Communication; G2.1.19: 3.0/3.0 Plant computer information for system status determination; G2.1.20: 4.3/4.2 Execute Procedural Steps; G2.1.31: 4.2/3.9 Locate and determine correct alignment of Control Room indications are covered during each evolution during the dynamic simulator examination.

[2] 10 CFR 55.45 (a) (3), (4), (12) and (13) are performed during each evolution during the dynamic simulator examination.

Critical Tasks

- When level drops to < -191 inches or after level drops between TAF and – 191 inches, opens at least seven SRVs before level drops to – 212 inches. Pumps must be running and lined up for injection before reactor pressure decreases to 300 psig.

- Manually initiates Division 2 ECCS when fails to initiate.