UNITED STATES
NUCLEAR REGULATORY COMMISSION
REGION IV
611 RYAN PLAZA DRIVE, SUITE 400
ARLINGTON, TEXAS 76011-4005

August 17, 2007

EA 07-090

Stewart B. Minahan, Vice
President-Nuclear and CNO
Nebraska Public Power District
72676 648A Avenue
Brownville, NE 68321

SUBJECT: FINAL SIGNIFICANCE DETERMINATION FOR A WHITE FINDING AND NOTICE OF VIOLATION - NRC SPECIAL INSPECTION REPORT 05000298/2007007 - COOPER NUCLEAR STATION

Dear Mr. Minahan:

The purpose of this letter is to provide you the final results of our significance determination of the preliminary White finding identified in the subject inspection report. The inspection finding was assessed using the Significance Determination Process and was preliminarily characterized as White, a finding with low to moderate increased importance to safety, that may require additional NRC inspections. This proposed White finding involved an apparent violation of 10 CFR Part 50, Appendix B, Criterion V, "Instructions Procedures, and Drawings," involving the failure to establish procedural controls for evaluating the use of parts prior to their installation in safety-related applications, (e.g. the emergency diesel generator).

At your request, a Regulatory Conference was held on July 13, 2007. During this conference your staff presented information related to the voltage regulator failures that adversely affected Emergency Diesel Generator (EDG) 2. This included information regarding the failure mechanism of the voltage regulator circuit board, results of your root cause evaluations, and associated corrective actions. The July 13, 2007, Regulatory Conference meeting summary, dated July 18, 2007 (ML072000280), includes a copy of the CNS presentation.

Based on NRC review of all available information, including the information discussed during the Regulatory Conference, the NRC has decided not to pursue a violation of 10 CFR Part 50, Appendix B, Criterion V. However, the NRC has determined a violation of 10 CFR Part 50, Appendix B, Criterion XVI, "Corrective Action," did occur in that CNS failed to promptly identify a significant condition adverse to quality that resulted in the reduced reliability of EDG 2. Two distinct and reasonable opportunities to identify the condition adverse to quality existed yet the condition was not promptly identified and corrected to preclude recurrence. Specifically, your inadequate procedural guidance for evaluating the suitability of parts used in safety related applications presented one missed opportunity to identify that an EDG voltage regulating circuit board was defective prior to its installation on November 8, 2006. Following installation of the defective EDG 2 voltage regulator circuit board two high voltage conditions, one resulting in an EDG automatic high voltage trip, occurred on November 13, 2006. Your evaluation of these high voltage events missed another opportunity to identify and correct the deficient condition.

The failure to identify and correct this deficiency resulted in an additional high voltage trip of EDG 2 that occurred on January 18, 2007. This violation is cited in the enclosed Notice of Violation (Enclosure 1). The details describing the 10 CFR Part 50, Appendix B, Criterion XVI, "Corrective Action," violation are described in Enclosure 2.

The NRC's preliminary assessment of the safety significance of the inspection finding is documented in Attachment 3 of NRC Inspection Report 05000298/2007007 (ML071430289). This assessment resulted in a change in core damage frequency (delta CDF) of 5.6E-6, being a finding of low to moderate safety significance, or White. Our preliminary assessment used the loss of offsite power (LOOP) initiating event frequency and EDG non-recovery/repair probabilities, as described in NUREG/CR-6890, "Reevaluation of Station Blackout Risk at Nuclear Power Plants, Analysis of Loss of Offsite Power Events: 1986-2004." This assessment assumed that the voltage regulator degraded only during times that the EDG was in operation. The assessment assumed the voltage regulator could not be repaired or replaced in time to affect the outcome of any core damage sequences. The ability to take manual control of EDG 2 was not credited because procedures did not exist and training was not performed in this EDG mode of operation. As a sensitivity assessment a case for diagnosing the failure of the automatic voltage regulator and successfully operating the EDG in manual mode was considered. A recovery failure probability for EDG 2 of 0.3 was assumed that lowered the delta CDF to a value of 1.7E-6. A value characterized as having low to moderate safety significance, or White.

Based on additional information indicating that the voltage regulator card failure mechanism was intermittent, the NRC determined that a revised safety significance assessment was warranted. This revised assessment is provided as Enclosure 3. This assessment was performed assuming that the faulty voltage regulator card reduced the reliability of EDG 2. The reduced reliability factor was calculated assuming that two failures resulting in high voltage EDG trips occurred within a period of 36 hours during which the subject voltage regulator card was energized. This assumption was made recognizing that an additional high voltage condition occurred on November 13, 2006, that did not result in an EDG trip because the duration of the high voltage condition was shorter than the time delay setting. Additionally, the NRC revised assessment refined the probability of failing to recover the failed EDG 2 to a value of 0.275. This value corresponds to an 83 percent probability for successfully diagnosing the automatic voltage regulator failure, during a station blackout event, and a 90 percent probability for successfully implementing recovery actions.

During the Regulatory Conference, CNS asserted the finding was of very low safety significance, or Green. On July 27, 2007, CNS provided to the NRC their "Probabilistic Safety Assessment" that is provided as Enclosure 4. The CNS assessment of very low safety significance was made based on five key assumptions that differed from the NRC's.

The first difference was that following failure of EDG 2, CNS assumed recovery of EDG 2 prior to core damage occurring with a failure probability of 0.032. This failure probability of recovery significantly differed from the NRC assessment of 0.275. The NRC determined that 0.275 was a more realistic value after reviewing the human error factors present. Factors assessed are discussed in detail in the NRC Phase 3 Analysis provided in Enclosure 3. These factors included:

1) the high complexity of diagnosing an automatic voltage regulator failure during a station blackout event that would involve the support of CNS engineering staff; and 2) recovering the failed EDG in manual voltage control during a station blackout event having incomplete procedural guidance and a lack of operator training and experience involving operating the EDG in manual voltage control during loaded conditions.

The second difference was that CNS calculated the reduced reliability factor for EDG 2 assuming that one failure was the result of the defective diode during the 36-hour duration the subject voltage regulator was energized. CNS asserted that conclusive evidence did not exist that the cause of the November 13, 2006, event was the result of intermittent voltage regulator card diode failure. The NRC reviewed all available information provided by CNS related to the November 13 event. This included the apparent cause evaluation, the laboratory failure analysis report, industry operating experience, and electrical schematic review of the EDG voltage regulating system. Based on our reviews the NRC determined that an intermittent diode failure of the voltage regulator circuit board was the most plausible failure mechanism. Therefore, the NRC concluded that two failures should be used in the EDG 2 reliability calculation.

The third difference involved CNS evaluating the aspect of convolution related to the probability of recovering offsite power or EDG 1 before or close in time to the assumed failure of EDG 2. This consideration would render the safety consequences of these events to be less significant. The NRC agreed that our model was overly conservative in this aspect, and performed an assessment that incorporated credit for convolution. This resulted in a reduction of delta CDF.

The fourth difference involved CNS crediting the station Class 1E batteries for periods greater than the 8-hour duration utilized in the current risk model. Based on information reviewed the NRC concluded that extended battery operation beyond eight hours was plausible, however, other operational challenges would be present as described in Appendix A, "Station Blackout Event Tree Adjustments," Table A-1 of the CNS Probabilistic Safety Assessment (Enclosure 4). Based on these considerations the NRC adjusted our model extending the Class 1E batteries to 10 hours. In addition, an adjustment was made to account for the recovery dependency associated with the failure of both EDGs.

The fifth difference involved CNS asserting that implementation of specific station blackout mitigating actions, that were not currently credited in either the NRC or the CNS risk models, would reduce the risk significance of the finding. These specific actions included the use of fire water injection to the core, manual operation of the reactor core isolation cooling (RCIC) system, and the ability to black start an EDG following battery depletion events. Based on our review, and as discussed in the NRC Phase 3 Analysis (Enclosure 3), the NRC determined the success of using these alternative mitigation strategies were offset by the risk contribution of external events.

After careful consideration of the information provided at the Regulatory Conference, the information provided in your risk assessment received on July 27, 2007, and the information developed during the inspection, the NRC has concluded that the best characterization of risk for this finding is of low to moderate safety significance (White), with a delta CDF of 1.2E-6.

You have 30 calendar days from the date of this letter to appeal the NRC's determination of significance for the identified White finding. Such appeals will be considered to have merit only if they meet the criteria given in NRC Inspection Manual Chapter 0609, Attachment 2. In accordance with the NRC Enforcement Policy, the Notice of Violation is considered an escalated enforcement action because it is associated with a White finding.

You are required to respond to this letter and should follow the instructions specified in the enclosed Notice when preparing your response.

In addition, we will use the NRC Action Matrix to determine the most appropriate NRC response and any increase in NRC oversight, or actions you need to take in response to the most recent performance deficiencies. We will notify you by separate correspondence of that determination.

In accordance with 10 CFR 2.390 of the NRC's "Rules of Practice," a copy of this letter, its enclosures, and your response will be made available electronically for public inspection in the NRC Public Document Room or from the Publicly Available Records component of NRC's document system (ADAMS). ADAMS is accessible from the NRC Web site at http://www.nrc.gov/reading-rm/adams.html (the Public Electronic Reading Room). To the extent possible, your response should not include any personal privacy, proprietary, or safeguards information so that it can be made available to the Public without redaction.

Sincerely,

Bruce S. Mallett
Regional Administrator

Docket: 50-298
License: DPR-46

Enclosure 1: Notice of Violation
Enclosure 2: Notice of Violation Details
Enclosure 3: NRC Phase 3 Analysis
Enclosure 4: CNS Probabilistic Safety Assessment

cc w/Enclosures:
Gene Mace
Nuclear Asset Manager
Nebraska Public Power District
P.O. Box 98
Brownville, NE 68321

John C. McClure, Vice President
and General Counsel
Nebraska Public Power District
P.O. Box 499
Columbus, NE 68602-0499

D. Van Der Kamp, Acting Licensing Manager
Nebraska Public Power District
P.O. Box 98
Brownville, NE 68321

Michael J. Linder, Director
Nebraska Department of
Environmental Quality
P.O. Box 98922
Lincoln, NE 68509-8922

Chairman
Nemaha County Board of Commissioners
Nemaha County Courthouse
1824 N Street
Auburn, NE 68305

Julia Schmitt, Manager
Radiation Control Program
Nebraska Health & Human Services
Dept. of Regulation & Licensing
Division of Public Health Assurance
301 Centennial Mall, South
P.O. Box 95007
Lincoln, NE 68509-5007

H. Floyd Gilzow
Deputy Director for Policy
Missouri Department of Natural Resources
P. O. Box 176
Jefferson City, MO 65102-0176

Director, Missouri State Emergency
Management Agency
P.O. Box 116
Jefferson City, MO 65102-0116

Chief, Radiation and Asbestos
Control Section
Kansas Department of Health
and Environment
Bureau of Air and Radiation
1000 SW Jackson, Suite 310
Topeka, KS 66612-1366

Daniel K. McGhee, State Liaison Officer
Bureau of Radiological Health
Iowa Department of Public Health
Lucas State Office Building, 5th Floor
321 East 12th Street
Des Moines, IA 50319

Melanie Rasmussen, Radiation Control
Program Director
Bureau of Radiological Health
Iowa Department of Public Health
Lucas State Office Building, 5th Floor
321 East 12th Street
Des Moines, IA 50319

Ronald D. Asche, President
and Chief Executive Officer
Nebraska Public Power District
1414 15th Street
Columbus, NE 68601

P. Fleming, Director of
Nuclear Safety Assurance
Nebraska Public Power District
P.O. Box 98
Brownville, NE 68321

John F. McCann, Director, Licensing
Entergy Nuclear Northeast
Entergy Nuclear Operations, Inc.
440 Hamilton Avenue
White Plains, NY 10601-1813

Keith G. Henke, Planner
Division of Community and Public Health
Office of Emergency Coordination
930 Wildwood, P.O. Box 570
Jefferson City, MO 65102

Chief, Radiological Emergency
Preparedness Section
Kansas City Field Office
Chemical and Nuclear Preparedness
and Protection Division
Dept. of Homeland Security
9221 Ward Parkway
Suite 300
Kansas City, MO 64114-3372

Distribution:

RIDSSECYMAILCENTER	RIDSOCAMAILCENTER
RIDSEDOMAILCENTER	RIDSOEMAILCENTER
RIDSOGCMAILCENTER	RIDSNRROD
RIDSNRRADIP	RIDSOPAMAIL
RIDSOIMAILCENTER	RIDSOIGMAILCENTER
RIDSOCFOMAILCENTER	RIDSRGN1MAILCENTER
RIDSRGN2MAILCENTER	RIDSRGN3MAILCENTER
RIDSNRRDIPMIIPB	OEWEB
OEMAIL	

cc w/enclosures (via ADAMS e-mail distribution):

B. Mallett **(BSM1)**	DRS BC's **(DAP, LJS, ATG, MPS1)**
T.P. Gwynn **(TPG)**	M. Herrera **(MSH3)**
K. Fuller **(KSF)**	D. Starkey, OE **(DRS)**
W. Maier **(WAM)**	M. Ashley, NRR **(MAB)**
A. Howell **(ATH)**	N. Hilton, OE **(NDH)**
T. Vegel **(AXV)**	M. Haire **(MSH2)**
D. Chamberlain **(DDC)**	M. Vasquez **(GMV)**
R. Caniano **(RJC1)**	C. Carpenter, OE **(CAC)**
W. Jones **(WBJ)**	V. Dricks **(VLD)**
M. Hay **(MCH2)**	J. Cai, OE **(JXC11)**
N. Taylor **(NHT)**	S. Farmer **(SEF1)**
J. Wray, OE **(JRW3)**	

SUNSI Review Completed: MCH ADAMS: ☒ Yes ☐ No Initials: MCH
☒ Publicly Available ☐ Non-Publicly Available ☐ Sensitive ☒ Non-Sensitive

R:_REACTORS\CNS\2007\CNS2007-07NOVltr.wpd

RI:DRP/C	SRA:DRS	C:DRP/C	DD:DRS	ACES
NHTaylor	MFRunyan	MCHay	WBJones	MVasquez
/RA MCHay for/	***/RA/***	***/RA/***	***/RA/***	***/RA/***
07/26/07	08/09/07	08/09/07	07/26/07	07/30/07

RC:ACES	DD:DRP	NRR	NRR	NRR
KSFuller	AVegel	SMWong	MFranovich	SARichards
/RA/	***/RA/***	***/RA electronic/***	***/RA electronic/***	***/RA ECollins for/***
07/27/07	08/ 09 /07	08/ 09 /07	08/ 09 /07	08/ 09 /07

NRR/DRA	OE	NRR	DRA	RA
MCunningham	NHilton	JCircle	TPGwynn	BSMallett
/RA electronic/	electronic	**/RA electronic/**		BSM
08/09/07	08/14 /07	08/09/07	08/14 /07	08/14 /07

OFFICIAL RECORD COPY T=Telephone E=E-mail F=Fax
*Previous Concurrence

NOTICE OF VIOLATION

Nebraska Public Power District
Cooper Nuclear Station

Docket No. 50-298
License No. DPR-46
EA-07-090

During an NRC inspection completed on April 24, 2007, and following a Regulatory Conference conducted on July 13, 2007, a violation of NRC requirements was identified. In accordance with the NRC Enforcement Policy, the violation is listed below:

> 10 CFR Part 50, Appendix B, Criterion XVI, requires, in part, that measures shall be established to assure that conditions adverse to quality, such as failures and malfunctions, are promptly identified and corrected. In the case of significant conditions adverse to quality, the measures shall assure that the cause of the condition is determined and corrective action taken to preclude repetition.
>
> Contrary to the above, as of January 18, 2007, the licensee failed to establish measures to promptly identify and correct a significant condition adverse to quality, and failed to assure that the cause of a significant condition adverse to quality was determined and that corrective action was taken to preclude repetition. Specifically, the licensee's inadequate procedural guidance for evaluating the suitability of parts used in safety related applications presented an opportunity in which the licensee failed to promptly identify a defective voltage regulator circuit board used in Emergency Diesel Generator (EDG) 2 prior to its installation on November 8, 2006, a significant condition adverse to quality. Following installation of the defective EDG 2 voltage regulator circuit board, the licensee failed to determine the cause of two high voltage conditions which occurred on November 13, 2006, and failed to take corrective action to preclude repetition. As a result, an additional high voltage condition occurred resulting in a failure of EDG 2 on January 18, 2007.
>
> This violation is associated with a White SDP finding.

Pursuant to the provisions of 10 CFR 2.201, Nebraska Public Power District is hereby required to submit a written statement or explanation to the U.S. Nuclear Regulatory Commission, ATTN: Document Control Desk, Washington, DC 20555-0001 with a copy to the Regional Administrator, Region IV, and a copy to the NRC Resident Inspector at the facility that is the subject of this Notice, within 30 days of the date of the letter transmitting this Notice of Violation (Notice). This reply should be clearly marked as a "Reply to a Notice of Violation; EA-07-090," and should include for each violation: (1) the reason for the violation, or, if contested, the basis for disputing the violation or severity level, (2) the corrective steps that have been taken and the results achieved, (3) the corrective steps that will be taken to avoid further violations, and (4) the date when full compliance will be achieved. Your response may reference or include previous docketed correspondence, if the correspondence adequately addresses the required response. If an adequate reply is not received within the time specified in this Notice, an order or a Demand for Information may be issued as to why the license should not be modified, suspended, or revoked, or why such other action as may be proper should not be taken. Where good cause is shown, consideration will be given to extending the response time.

Because your response will be made available electronically for public inspection in the NRC Public Document Room or from the NRC's document system (ADAMS), accessible from the NRC Web site at http://www.nrc.gov/reading-rm/adams.html, to the extent possible, it should not include any personal privacy, proprietary, or safeguards information so that it can be made available to the public without redaction. If personal privacy or proprietary information is necessary to provide an acceptable response, then please provide a bracketed copy of your response that identifies the information that should be protected and a redacted copy of your response that deletes such information. If you request withholding of such material, you must specifically identify the portions of your response that you seek to have withheld and provide in detail the bases for your claim of withholding (e.g., explain why the disclosure of information will create an unwarranted invasion of personal privacy or provide the information required by 10 CFR 2.390(b) to support a request for withholding confidential commercial or financial information). If safeguards information is necessary to provide an acceptable response, please provide the level of protection described in 10 CFR 73.21.

Dated this 17th day of August 2007.

Notice of Violation Details

Scope

Following issuance of NRC Inspection Report 05000298/2007007 (ML071430289), that identified an apparent violation of 10 CFR Part 50, Appendix B, Criterion V, "Instructions Procedures, and Drawings," additional information was reviewed that included the CNS Probabilistic Safety Assessment, laboratory information related to the failure mechanism of the voltage regulator circuit board, and information discussed during the Regulatory Conference held on July 13, 2007, related to this potential finding. After reviewing all available information related to the Emergency Diesel Generator (EDG) 2 high voltage events, the NRC decided not to pursue a violation of 10 CFR Part 50, Appendix B, Criterion V. However, the NRC determined an apparent violation of 10 CFR Part 50, Appendix B, Criterion XVI, "Corrective Action," did occur in that CNS failed to promptly identify a significant condition adverse to quality that resulted in the reduced reliability of EDG 2. Two distinct and reasonable opportunities to identify the condition adverse to quality existed yet the condition was not promptly identified and corrected to preclude recurrence. The following details discuss the additional information reviewed and provide the basis for our decision.

Details

On November 8, 2006, a potentiometer mechanically failed during planned maintenance on the Emergency Diesel Generator (EDG) 2 voltage regulator. Work order 4514076 provided the technical instructions for this maintenance activity and contained a contingency for the replacement of the voltage regulator printed circuit board. Replacement of the circuit board was performed on November 8, 2006. Following replacement, the circuit board required tuning. The tuning process was conducted on November 13, 2006, and included making incremental adjustments to the R13 feedback adjust potentiometer and then introducing small voltage demand changes. Approximately ten seconds after one voltage demand change EDG 2 experienced a pair of output voltage spikes, the first to approximately 5500 volts, and the second to greater than 5900 volts. The second voltage spike resulted in a high voltage trip of EDG 2. The NRC noted that at the time the voltage spikes occurred, maintenance personnel were reviewing strip chart recorder traces and no voltage regulator components were being manipulated and no changes in demanded voltage were occurring.

The licensee conducted a failure modes effects analysis (FMEA) and completed troubleshooting activities consisting of diagnostic tests and test runs of EDG 2 between November 13-15, 2006. Based on the lack of any additional high voltage events during the test runs, completion of the FMEA, and input from a vendor field representative, the licensee concluded that the high voltage events that occurred on November 13 were attributable to erratic behavior of the feedback potentiometer being adjusted to tune the circuit board. This conclusion is described in the apparent cause evaluation attached to Condition Report CR-CNS-2006-09096. After completion of a subsequent series of satisfactory surveillance test runs, EDG 2 was declared operable on November 19, 2006. Subsequently, on January 18, 2007, EDG 2 experienced another high voltage trip during surveillance testing. The licensee's root cause evaluation of this high voltage trip, as described in Condition Report CR-CNS-2007-00480, determined that a manufacturing defect of a diode, attached to the printed circuit board installed on November 8, 2006, caused the high voltage conditions observed.

The NRC reviewed the Condition Report CR-CNS-2006-9096 apparent cause evaluation addressing the high voltage conditions experienced on November 13, 2006, conducted interviews with engineers and maintenance personnel, and reviewed applicable technical manuals. The NRC determined that erratic behavior of either or both potentiometers on the printed circuit board was not a likely cause for the November 13, 2006, high voltage events. The NRC discussed this observation with licensee management on February 1, 2007, after which the licensee initiated Condition Report CR-CNS-2007-00959 documenting the concern. Following these discussions, the licensee completed a more detailed evaluation of the apparent cause. This more detailed evaluation concluded that the erratic behavior of the feedback potentiometer, combined with the possibility that an oxidation layer could have built up on the potentiometer slide wire, could have caused an open circuit on the voltage regulator printed circuit board. The licensee believed that this open circuit could have resulted in the high voltage condition that EDG 2 experienced. The NRC noted that this evaluation was not based on direct observation or circuit modeling, but on hypothetical information from a field service vendor. The NRC questioned the licensee if the vendors were aware of any similar EDG high voltage condition occurring due to erratic potentiometer operation during the tuning process of the voltage regulator circuit board. The licensee provided the NRC a written response from the vendor that stated, "No. In addition, we have not seen or heard of such an event while adjusting the Range and/or Stability potentiometers on any make or model of voltage regulator."

The NRC noted that the November 13, 2006, high voltage trip of EDG 2 was not viewed by the licensee as a possible precursor to the January 18, 2007, event until the receipt of a laboratory report on May 8, 2007. This laboratory report contained the results of destructive testing of the VR1 zener diode from the voltage regulator printed circuit board. This report provided definitive evidence that the January 18, 2007, overvoltage trip of EDG 2 was caused by an intermittent discontinuity in the diode resulting from a manufacturing defect. Based on this new information, the licensee revised the root cause report in CR-CNS-2007-00480 and viewed the November 13, 2006, EDG 2 high voltage trip as a possible precursor to the January 18, 2007, EDG 2 high voltage trip. Additionally, the NRC noted that when the faulted circuit board was being evaluated at the laboratory, no actions were taken to validate if the potentiometers on the card were potentially the source of the high voltage events that occurred on November 13, 2006, as their FMEA had concluded.

The NRC reviewed the FMEA performed in Condition Report CR-CNS-2006-9096. The NRC noted that operating and maintenance instructions of the EDG voltage regulator system are described in the Basler Electric Company Operation and Service Manual, Series Boost Exciter-Regulator, Type SBSR HV, dated November 1970. In addition, the NRC noted that Electric Power Research Institute (EPRI) published a technical report, Basler SBSR Voltage Regulators for Emergency Diesel Generators, dated November 2004, that provided updated operating, maintenance, and troubleshooting recommendations to industry users. The licensee used both of these resources extensively for procedure development and to guide troubleshooting efforts.

The NRC noted Section 5 of the Basler vendor manual provided recommendations for maintenance and troubleshooting. Table 5-1 of this manual provided a symptom based-probable cause table for voltage regulator problems. In the case of the November 13, 2006, EDG 2 high voltage trip, the following guidance was applicable:

Symptom	Probable Cause	Remedy
Voltage high, uncontrollable with voltage adjust rheostat.	Open fuse F1 in voltage regulator power stage.	If no voltage control on automatic operation, replace fuse F1. If no voltage control on manual operation, replace fuse F2.
	Defect in voltage regulator printed circuit board. No current indicated on saturable transformer control current meter.	Replace printed circuit board assembly.

Section 8 of the EPRI technical report also provided troubleshooting recommendations. The section of the table that provided valuable insight for the November 13 trip is as follows:

Symptom	Problem	Solution
Voltage high and uncontrollable with motor operated potentiometer (MOP)	No or low voltage from sensing potential transformers	Verify that there are no blown potential transformer fuses and that there are good connections at the potential transformers
	Shorted MOP	Replace R60 or entire MOP assembly
	T2 transformer set to wrong tap	Verify tap setting of 120 VAC
	Faulty voltage regulator assembly	Replace voltage regulator assembly

The NRC noted that the FMEA discussed each of the probable causes of the uncontrollable high voltage on EDG 2, but that not all of the recommended actions were taken. Specifically, the licensee did not replace the faulty voltage regulator assembly even though both the Basler technical manual and the EPRI technical report recommended its replacement following uncontrollable high voltage conditions.

In addition, the NRC noted that Condition Report CR-CNS-2006-9096, contained a summary of industry operating experience regarding failures of Basler voltage regulators. Of the 58 Basler

failures listed in the report, 33 involved Basler SBSR voltage regulators, the same type used at Cooper Nuclear Station. Of these, four involved manufacturing defects on the printed circuit boards. The NRC identified another eight Basler voltage regulator failures related to manufacturing quality in publicly available sources of operating experience. The NRC also noted that none of these failures occurred due to erratic potentiometer operation utilized during the tuning process.

As previously documented in NRC Inspection Report 05000298/2007007, the licensee root cause report evaluating the January 18, 2007, EDG 2 high voltage event, documented in CR-CNS-2007-00480, determined that the cause of the failure was that the original procurement process did not provide technical requirements to reduce the probability of infant mortality failure in the voltage regulator board. The licensee determined that the failed circuit board had been purchased from the Basler Electric Company in 1973, but that the procurement of the part had not specified any technical requirements from the vendor. In effect, the part was purchased as a commercial grade item from a non-Appendix B source and placed into storage as an essential component, ready for use in safety-related applications, without any documentation of its suitability for that purpose. The licensee determined that the specification of proper technical requirements, such as inspections and/or testing, would have provided an opportunity to discover the latent defect prior to installing the card in an essential application.

During the Regulatory Conference on July 13, 2007, the licensee stated that even if they had performed additional testing, such as a burn in, of the voltage regulator card prior to its installation on November 8, 2006, that such testing would probably not identify the faulty diode. In addition, the licensee stated that since this card was purchased in 1973, Generic Letter 91-05, "Licensee Commercial-Grade Procurement and Dedication Programs," discussed that the NRC did not expect licensee's to review all past procurements.

With respect to these assertions, the NRC determined that had the licensee performed testing of the card prior to its installation in accordance with standard industry recommendations, there was some probability that such a defect would have been identified. This conclusion was based on the fact the laboratory findings coupled with the actual high voltage occurrences experienced on November 13, 2006, and January 18, 2007, confirmed that the failure was of an intermittent nature and variations such as temperature alone could cause the condition to manifest itself. With respect to the assertion that Generic Letter 91-05 did not require licensee's to review past commercial grade procurements that may have been inappropriately dedicated suitable for safety related applications, the NRC determined the licensee missed an opportunity to perform additional evaluations concerning the suitability of the voltage regulating circuit board prior to its installation. Specifically, Generic Letter 91-05 states, in part, that the NRC does not expect licensee's to review all past procurements. However, if failure experience or current information on supplier adequacy indicates that a component may not be suitable for service, then corrective actions are required for all such installed and stored items in accordance with 10 CFR Part 50, Appendix B, Criterion XVI, "Corrective Action." Based on the previously discussed operating experience related to quality concerns associated with Basler voltage regulating cards, the NRC determined that the licensee missed an opportunity to evaluate this information prior to installing the EDG 2 voltage regulating card on November 8, 2006. Additionally, following the high voltage conditions experienced on November 13, 2006, this operating experience, although obtained, did not result in the licensee questioning the quality of the component as reflected in Item 10 of the licensee's Equipment Failure Evaluation Checklist dated November 30, 2006, stating there were no concerns associated with the quality of the part.

Additionally, the NRC reviewed Condition Report CR-CNS-2007-04278, which reported that the licensee had failed to perform a required root cause analysis following the diesel generator failure on November 13, 2006. Administrative Procedure 05.CR, "Condition Report Initiation, Review, and Classification," Revision 7, requires that a condition report be classified as Category A (root cause investigation) for "repeat Critical 1 Component equipment failures that have previously been addressed with a root or apparent cause evaluation." Voltage control problems on EDG 2, a "critical 1 component" in the licensee's equipment reliability program, had been addressed using apparent cause evaluations on four separate occasions in the twelve months prior to the November 13, 2006, high voltage trip. Contrary to the guidance in Procedure 0.5CR, the November 13 trip was again assigned an apparent cause evaluation versus the required root cause evaluation. When EDG 2 subsequently tripped again on January 18, 2007, a root cause team was assembled, which resulted in the identification of a defective diode on the voltage regulator printed circuit board.

Based on the previously discussed observations the NRC concluded that multiple opportunities existed for the licensee to promptly identify that the EDG 2 voltage regulating card installed on November 8, 2006, was defective prior to declaring the EDG operable on November 19, 2006. Based on the failure to promptly identify this degraded condition corrective actions were not implemented in accordance with 10 CFR Part 50, Appendix B, Criterion XVI, "Corrective Action," resulting in the failure of EDG 2 on January 18, 2007.

Analysis: This finding is a performance deficiency because the licensee failed to promptly identify that a defective Emergency Diesel Generator (EDG) 2 voltage regulator circuit board was installed that resulted in adversely affecting the safety function of equipment important to safety. This finding is more than minor because it is associated with the equipment performance attribute of the Mitigating Systems cornerstone and adversely affects the cornerstone objective of ensuring the availability, reliability, and capability of systems that respond to initiating events.

This finding was evaluated using the Significance Determination Process (SDP) Phase 1 Screening Worksheet provided in Manual Chapter 0609, Appendix A, "Significance Determination of Reactor Inspection Findings for At-Power Situations." The screening indicated that a Phase 2 analysis was required because the finding represents a loss of safety function for EDG 2 for greater than its Technical Specification allowed completion time. The Phase 2 and 3 evaluations concluded that the finding was of low to moderate safety significance (See Enclosure 3 for details).

The cause of this finding is related to the problem identification and resolution crosscutting components of the corrective action program and operating experience because the licensee failed to thoroughly evaluate the EDG high voltage condition such that resolutions address the causes and the licensee failed to effectively use operating experience, including vendor recommendations, resulting in changes to plant equipment (P.1(c)), and (P.2(b)).

Cooper Nuclear Station
Failure of EDG 2 Voltage Regulator
NRC Phase 3 Analysis

The NRC estimated the risk increase resulting from the degraded Emergency Diesel Generator (EDG) 2 voltage regulator. The diesel was run at the following times with durations reported as the period of time that the voltage regulator was energized (all of these operational runs were conducted after the defective voltage regulator circuit board was installed):

11/11/06 0 hrs 3 min
11/13/06 1 hr 30 min (first failure)
11/14/06 6 hrs 46 min
11/15/06 1 hr 35 min
11/16/06 9 hrs 23 min
11/17/06 5 hrs 3 min
11/18/06 2 hrs 28 min
12/12/06 5 hrs 41 min
01/18/07 4 hrs 16 min (second failure)

The unit was returned to Mode 1 on November 22, 2006, and ran at power until the last failure occurred on January 18, 2007. The period of exposure was 57 days.

Assumptions

1. The licensee determined that the voltage regulator failures were caused by an intermittent condition resulting from a faulty diode. Two failures of the voltage regulator occurred within a period of 36 hours during which the voltage regulator was energized. This information was used to calculate an hourly failure rate for use in the risk analysis. The NRC noted the licensee had calculated an increased unreliability of the voltage regulator by performing a Bayesian update of industry data. However, the NRC determined that the risk impact is more accurately expressed by modeling the condition as a new failure mode of the diesel generator.

2. Common cause vulnerabilities for EDG 1 did not exist, that is, the failure mode is assumed to be independent in nature. This is because the root cause investigation determined that the failure was the result of a manufacturing defect resulting in an infant mortality. The same component in EDG1 had been installed since initial plant operations and had operated reliably beyond the "burn-in" period, providing evidence that it did not have the same manufacturing defect. The NRC considered the probability of EDG 1 failing from defective voltage regulator within a short period of time of the EDG 2 failure to be too low to affect the results of this analysis.

3. The standard CNS SPAR model credited the Class 1E batteries with an 8-hour discharge capability following a station blackout. Based on information received from the licensee, this credit was extended to 10 hours. Although the batteries could potentially function beyond 10 hours under certain conditions other challenges related to the operation of RCIC and HPCI in station blackout conditions would be present. These challenges included the availability of adequate injection supply water and operational concerns of

RCIC under high back pressure conditions as a result of the unavailability of suppression pool cooling during an extended station blackout event.

4. Using the SPAR-H methodology, it was estimated that the probability of recovering from the failure, using manual voltage regulation control, in a time frame consistent with the core damage sequences was 72.5 percent, or a 0.275 non-recovery probability. Recovery would involve diagnosing the problem and then making a decision to either replace the automatic voltage regulating circuit board or operate the EDG in a manual voltage regulating mode.

The results of this analysis are presented in the table below:

Performance Shaping Factor	Diagnosis (0.01)	Action (0.001)
Available Time	Expansive Time (0.01) (>2X nominal and > 30 min.)	>5 Times Required (0.1)
Stress	High (2)	High (2)
Complexity	High (5)	Moderate (2)
Experience/Training	Low (10)	Low (3)
Procedures	Incomplete (20)	Incomplete (20)
Ergonomics	Nominal	Nominal
Work Processes	Nominal	Poor (5)
Total[1]	0.168	0.107
Overall Total HRA	0.275	

(1) This reflects the result using the formula for cases where 3 or more negative PSFs are present.

The nominal time for performing the actions was small compared to the minimum time of 4 or 8 hours available (for most core damage sequences) to restore power following a loss of offsite power (LOOP) event. The time available for diagnosis was considered to be expansive because it exceeded twice what would be considered nominal and is greater than 30 minutes. Extra time was credited for the action steps because at least 6 hours would be available for most sequences and it was assumed that approximately 1 hour would be required. High stress was assumed because the station would be in a blackout condition. The steps needed to diagnose the problem and decide on an action plan to either replace the voltage regulator or attempt manual voltage control operation were considered to be highly complex because procedural guidance did not direct operators to take manual voltage regulation control of the EDG following high voltage trip conditions. Diagnosing the failed voltage regulator and determining subsequent recovery actions would be an unfamiliar maintenance task requiring high skill. During NRC discussions

with control room operators they stated engineering support would be required to evaluate the diesel failure rather than attempt to start the EDG in manual control, potentially damaging the machine.

The NRC addressed diagnosis recovery as presented in the SPAR-H Method in NUREG/CR-6883, Section 2.8, "Recovery." Additional credit for this finding was not considered applicable because of a lack of additional alarms or cues that would occur after the initial diagnosis effort was completed. Also, the NRC determined that recovery from an initial diagnosis failure was already adequately accounted for in the 0.01 factor that was applied for the availability of expansive time. The actions needed to operate the diesel generator in a manual voltage regulating mode were considered to be moderately complex. Low training and experience was assumed because the plant staff had not performed this mode of operation and had not received specific training. Procedures focused on manual operation of the diesel were not available, but credit for incomplete procedures was applied because various technical sources were available that could be pieced together to generate a temporary working procedure. Work processes for actions were considered poor because a substantive crosscutting issue is currently open related to personnel failing to adhere to procedural compliance, reflective of a trend of poor work practices. The result of the SPAR-H analysis was a failure probability of 0.275. For the short-term (30-minute) sequences in the SPAR model (corresponding to the failure of steam-powered high pressure injection sources), credit for recovery of the EDG 2 voltage regulator failure was not applied because of inadequate time available.

5. For cutsets that contained both recovery of EDG 2 from the voltage regulator failure and a standard generic recovery for EDGs, which in this case would apply only to a recovery of EDG 1, a dependency correction was applied as discussed in the SPAR-H Method in NUREG/CR-6883, Section 2.6. The dependency rating was determined to be "high," based on the rating factors of "same crew" (crew in this case was defined as the team of managers and engineers who would be making decisions related to the recovery of both EDGs), "close in time", and "different location." To account for the dependency on the recovery of EDG 1, the formula of (1 + base SPAR non-recovery probability)/2 was used. The use of a dependency correction accounts for several issues, including the fact that the standard EDG recovery factors in SPAR models address the probability of recovering one of two EDGs that have failed, meaning that the more easily recoverable unit can be selected for this purpose. In this case, the recovery factor is limited to only one EDG, and the option to select the other EDG is not available within the mathematics of the model. The dependency also accounts for situations where recovery of one EDG may be abandoned in favor of recovery the other unit, and where the recovery team loses confidence after experiencing a failure to recover the first EDG. It also accounts for the splitting of resources in the double-EDG failure scenario.

6. For EDG fail-to-run basic events, the Cooper SPAR model assumes that the failure occurs immediately following the loss of offsite power event. This is a conservative modeling assumption because it fails to account for scenarios where offsite power or the other EDG is recovered prior to the moment that the EDG 2 experiences a failure to run. For the assumed intermittent failure condition of EDG 2, failure is assumed to be equally probable throughout the 24-hour mission time. Therefore, recovery of offsite power or the other diesel generator before or close in time following the assumed EDG 2 failure renders the safety consequences of the performance deficiency to be insignificant in those cases. To

correct for this conservatism, the Cooper SPAR model was modified with sequence specific convolution correction factors that were applied whenever an EDG fail-to-run event appeared in a cutset.

Internal Events Analysis

The Cooper SPAR model, Revision 3.31, dated October 10, 2006, was used in the analysis. A cutset truncation of 1.0E-12 was used. Average test and maintenance was assumed. The model was modified as previously discussed to apply convolution correction factors and to credit the battery with a 10-hour discharge capability. In addition, a modeling error was discovered and corrected related to the failure of a battery charger on a train alternate to an EDG failure. The result of this correction reduced the base CDF result of the model.

For the estimate of the voltage regulator failure rate, the NRC assumed a "zero" prior distribution which resulted in a lambda value of 0.556 for two failures occurring in a 36-hour time period (Assumption 1). Using a Poisson distribution, this equates to a probability of 0.736 that the EDG will fail to run within 24 hours following a demand. A 24-hour period is used as the standard mission time within the SPAR model.

The NRC created a new basic event for the failure of the voltage regulator and placed it into the fault tree for "Diesel Generator 2 Faults." Under the same "AND" gate, a basic event for recovery of the EDG 2 voltage regulator failure (0.275) was inserted. As previously discussed, for cutsets that contained both failure to recover EDG 2 from the voltage regulator failure and a standard SPAR EDG recovery term, which would in this case only apply to EDG 1, a correction to the standard EDG non-recovery probability was applied to account for the dependency between these two recoveries. Using the SPAR-H methodology, a high dependency was determined and the calculation using this assumption resulted in an increase in the non-recovery probability for EDG 1 within the affected cutsets. Additionally, for cutsets containing a 30-minute recovery term, related to the loss of high pressure injection sources, the value of the EDG 2 voltage regulator non-recovery probability was set to 1.0, because recovery of EDG 2 would not be possible in that time frame. The common cause EDG fail-to-run term was not changed and therefore all cutsets containing this term were completely offset by the base case.

The following table displays the result of the analysis:

Delta-CDF Result in SPAR	Result for 57-Day Exposure
7.846-6 /yr.	1.2E-6

The major cutsets were reviewed and no anomalies were identified.

External Events Analysis

The risk increase from fire initiating events was reviewed and determined to have a small impact on the risk of the finding. Only two fire scenarios were identified where equipment damage could cause an unintentional LOOP to occur. These are a fire in control room board C or a fire in control room vertical board F. For these control room fires, the probability of causing a LOOP are remote because of the confined specificity of their locations and the fact that a combination of hot shorts of a specific polarity are needed to cause the emergency and startup transformer breakers

to open. Breakers to these transformers do not lock out and recovery of power can be achieved by pulling the control power fuses at the breakers and operating the breakers manually. Procedures are available to perform these actions. The combination of the low event frequency and high recovery probability means that fires in these locations do not add appreciably to the risk of this finding.

The other class of fires resulting in a LOOP required an evacuation of the control room. In this case, plant procedures require isolating offsite power from the vital buses and using the preferred source of power, Division 2 EDG. The sequences that could lead to core damage would include a failure of the Division 1 EDG, such that ultimate success in averting core damage would rely on recovery of either EDG or of offsite power. A review of the onsite electrical distribution system did not reveal any particular difficulties in restoring switchyard power to the vital buses in this scenario, especially given that at least 8 hours are available to accomplish this task for the bulk of the core damage scenarios.

Switchgear room fires only affected the ability to power one of the two vital buses from offsite power, leaving at least one vital bus available for plant recovery. Therefore, a fire in Switchgear Room A would not require operation of EDG 2 and a fire in Switchgear Room B would not affect the risk difference of the finding because it would cause the same consequence as in the base case.

In general, the fire risk importance for this finding is small compared to that associated with internal events because onsite fires do not remove the availability of offsite power in the switchyard, whereas, in the internal events scenarios, long-term unavailability of offsite power is presumed to occur as a consequence of such events as severe weather or significant electrical grid failures.

The Cooper IPEEE Internal Fire Analysis screened the fire zones that had a significant impact on overall plant risk. When adjusted for the exposure period of this finding, the cumulative baseline core damage frequency for the zones having the potential for a control room evacuation (and a procedure-induced LOOP) or an induced plant centered LOOP was approximately 3.6E-7/yr. The methods used to screen these areas were not rigorous and used several bounding assumptions, the refinement of which would likely lower the result. Based on these considerations, the NRC concluded that the risk related to fires would not be sufficient to change the risk characterization of this finding.

The seismicity at Cooper is low and would likely have a small impact on risk for an EDG issue. As a sensitivity, data from the RASP External Events Handbook was used to estimate the scope of the seismic risk particular to this finding. The generic median earthquake acceleration assumed to cause a loss of offsite power is 0.3g. The estimated frequency of earthquakes at Cooper of this magnitude or greater is 9.828E-5/yr. The generic median earthquake frequency assumed to cause a loss of the diesel generators is 3.1g, though essential equipment powered by the EDGs would likely fail at approximately 2.0g. The seismic information for Cooper is capped at a magnitude of 1.0g with a frequency of 8.187E-6. This would suggest that an earthquake could be expected to occur with an approximate frequency of 9.0E-5/yr that would remove offsite power but not damage other equipment important to safe shutdown.

To model the seismic risk, that NRC assumed that offsite power could not be recovered within 24 hours and therefore zeroed all offsite power recoveries in the SPAR model. A CCDP was

generated for the base case and, using the same assumptions for the failure probability of the voltage regulator, for the analysis case. The result is presented in the following table:

Base CCDP	Case CCDP	Delta-CDF (IEF=9E-5/yr)	Result for 57-Day Exposure
1.279E-3	7.560E-3	5.7E-7	8.9E-8

Flooding could be a concern because of the proximity to the Missouri River. However, floods that would remove offsite power would also likely flood the EDG compartments and therefore not result in a significant change to the risk associated with the finding. The switchyard elevation is below that of the power block by several feet, but it is not likely that a slight inundation of the switchyard would cause a loss of offsite power. The low frequency of floods within the thin slice of water elevations that would remove offsite power for at least 4 hours, but not debilitate the diesel generators indicates that external flooding would not add appreciably to the risk of this finding.

The NRC determined that although external events would add risk to the overall assessment, the amount of risk would be small and not change the safety significance of the finding.

Alternative Mitigation Strategies

The NRC noted that several alternative mitigation strategies discussed by the licensee during the Regulatory Conference on July 13, 2007, were not modeled or were disabled in the SPAR model. These strategies included the ability to operate RCIC in a manual mode of operation following battery depletion, the use of firewater injection into the RCS, and the capability to blackstart an EDG following loss of the Class IE dc buses.

With respect to the use of fire water injection the NRC noted that the CNS SPAR model integrates a recovery based on firewater injection into the station blackout event tree. In the base case, this recovery is set at a non-recovery probability of 1.0, which implies no recovery credit. As a sensitivity study, the NRC assumed a baseline firewater failure probability of 0.1 and noted that the final delta CDF result was decreased by only 2.1 percent because firewater was only modeled in depressurized reactor coolant system sequences that were not large risk contributors to this finding.

With respect to manual operation of the RCIC system, the NRC noted that this mitigation strategy was not credited in either the NRC or CNS risk assessment models. Nonetheless, the feasibility of this strategy was assessed by reviewing station procedures, interviewing station personnel, performing a field walkdown of the procedural steps with station operators, and evaluating the human error factors that would be present following an extended station blackout event resulting in depletion of the station essential batteries. Based on this qualitative review, the NRC concluded that this strategy would not significantly change the overall risk assessment conclusion for this specific type of event. Factors assessed that affected this decision included: 1) following depletion of the battery supporting RCIC operation the initial valve lineup supporting manual system operation would take at least 75 minutes; 2) no cooling over an extended period of time in the RCIC turbine room causes an extremely high temperature environment that would significantly restrict personnel stay times; 3) reactor vessel level indication is on a different

elevation than the RCIC flow controls; 4) manual starting of the RCIC pump in this configuration has not been tested; 5) position indication is not readily available for motor operated valves; 6) procedures are not clear ensuring proper system alignment; 7) procedures do not verify adequate RCIC water supply tank level prior to starting the pump nor supply adequate guidance to maintain adequate level during RCIC operation to prevent vortexing concerns in the supply tank; 8) one identified motor operated valve that is required to be manually operated is approximately 12 feet above the floor and is not readily accessible because it is directly above the RCIC turbine; 9) operators would be required to travel up and down multiple levels (in an extremely hot environment) repeatedly; and 10) a substantive crosscutting issue is currently open related to personnel failing to follow procedural guidance reflective of a trend related to poor work practices.

Additionally, the ability to black start an EDG was reviewed by the NRC. The NRC concluded that because of the many uncertainties and associated variables that credit for this mitigation strategy was not readily quantifiable.

After review of the particular procedures, activities, and conditions under which these actions would be taken, none of these strategies were considered to appreciably affect the risk significance of the finding. Nevertheless, in a qualitative sense, they would improve the chances for avoiding core damage. The NRC determined the success of using these alternative mitigation strategies were comparable to the additional risk due to external events. Based on this qualitative assessment these alternative mitigation strategies were considered offset by the risk contribution of the external events.

Large Early Release Frequency:

In accordance with Manual Chapter 0609, Appendix A, Attachment 1, Step 2.6, "Screening for the Potential Risk Contribution Due to LERF," the NRC reviewed the core damage sequences to determine an estimate of the change in large early release frequency caused by the finding.

The LERF consequences of this performance deficiency were similar to those documented in a previous SDP Phase 3 evaluation regarding a misalignment of gland seal water to the service water pumps. The final determination letter was issued on March 31, 2005, and is located in ADAMS, Accession No. ML050910127. The following excerpt from this document addressed the LERF issue:

> "The NRC reevaluated the portions of the preliminary significance determination related to the change in LERF. In the regulatory conference, the licensee argued that the dominant sequences were not contributors to the LERF. Therefore, there was no change in LERF resulting from the subject performance deficiency. Their argument was based on the longer than usual core damage sequences, providing for additional time to core damage, and the relatively short time estimated to evacuate the close in population surrounding Cooper Nuclear Station.
>
> LERF is defined in NRC Inspection Manual Chapter 0609, Appendix H, "Containment Integrity Significance Determination Process" as: "the frequency of those accidents leading to significant, unmitigated release from containment in a time frame prior to the effective evacuation of the close-in population such that there is a potential for early health effect." The NRC noted that the dominant core damage sequences documented in the

preliminary significance determination were long sequences that took greater than 12 hours to proceed to reactor pressure vessel breach. The shortest calculated interval from the time reactor conditions would have met the requirements for entry into a general emergency (requiring the evacuation) until the time of postulated containment rupture was 3.5 hours. The licensee stated that the average evacuation time for Cooper, from the declaration of a General Emergency was 62 minutes.

The NRC determined that, based on a 62-minute average evacuation time, effective evacuation of the close-in population could be achieved within 3.5 hours. Therefore, the dominant core damage sequences affected by the subject performance deficiency were not LERF contributors. As such, the NRC's best estimate determination of the change in LERF resulting from the performance deficiency was zero."

In the current analysis, the total contribution of the 30-minute sequences to the current case CDF is only 0.17% of the total. For 2-hour sequences, the contribution is only 0.04%. That is, almost all of the risk associated with this performance deficiency involves sequences of duration 4 hours or longer following the loss of all ac power. Based on the average 62-minute evacuation time as documented above, the NRC determined that large early release did not contribute to the significance of the current finding.

References

NUREG/CR-6890, "Reevaluation of Station Blackout Risk at Nuclear Power Plants, Analysis of Loss of Offsite Power Events: 1986-2004"

"Incremental Change in Core Damage Probability Resulting from Degraded Voltage Regulator Diode Installed in the Division 2 Diesel Generator," PSA-ES083, Revision 0

NUREG/CR-6883, "SPAR-H Human Reliability Analysis Method"

Peer Review

John Kramer, NRR
See-Meng Wong, NRR
Jeff Circle, NRR
David Loveless, RIV

Enclosure 4

PROBABILISTIC SAFETY ASSESSMENT
COOPER NUCLEAR STATION
ENGINEERING STUDY

Incremental Change in Core Damage Probability Resulting from Degraded Voltage Regulator Diode Installed in the Division 2 Diesel Generator

PSA-ES082
Revision 0

Signature/Date
See Original for Signatures

Prepared By: Ole Olson 7/27/2007
Risk Management Engineer

Reviewed By: John Branch 7/27/2007
Risk Management Engineer

Approval: Kent Sutton 7/27/07
Risk Management Supervisor

Revisions:

Number	Description	Reviewed By	Reviewed Date	Approved By	Approved Date
0	Original Issue	See Above		See Above	

PROBABILISTIC SAFETY ASSESSMENT
COOPER NUCLEAR STATION
ENGINEERING STUDY

Incremental Change in Core Damage Probability Resulting from Degraded Voltage Regulator Diode Installed in the Division 2 Diesel Generator

PSA-ES082
Revision 0

Signature/Date
See Original for Signatures

Prepared By: Ole Olson 7/27/2007
Risk Management Engineer

Reviewed By: John Branch 7/27/2007
Risk Management Engineer

Approval: Kent Sutton 7/27/2007
Risk Management Supervisor

Revisions:

Number	Description	Reviewed By	Date	Approved By	Date
0	Original Issue	See Above		See Above	

Incremental Change in Core Damage Probability Resulting from Degraded Voltage Regulator Diode Installed in the Division 2 Diesel Generator

TABLE OF CONTENTS

EXECUTIVE SUMMARY 2
NOMENCLATURE 4
DEFINITIONS 5
1.0 INTRODUCTION 7
1.1 PURPOSE 7
1.2 BACKGROUND 7
1.2.1 Discussion of the AC Electrical Power System at CNS 7
1.2.2 Defective Diode's Impact on Normal Operation 10
1.2.3 Defective Diode's Impact on Emergency Operation 10
2.0 EVALUATION 10
2.1 SPECIFIC INCREASE IN RISK RESULTING FROM THE DEFECTIVE DIODE 10
2.1.1 ASSUMPTIONS AND CHARACTERISTICS OF THE MODEL 10
2.1.2 DERIVATION OF ICCDP 13
2.1.2.1 Base CDF Quantification 13
2.1.2.2 Conditional CDF Quantification 15
2.1.3 RISK SIGNIFICANCE CONCLUSIONS WITH RESPECT TO ICCDP 16
2.2 RISK INSIGHTS FROM BOUNDING ANALYSIS 16
2.2.1 ICCDP SENSITIVITY IN RELATION TO NON-RECOVERY AND DIODE FAILURE RATE 16
2.2.2 ICCDP SENSITIVITY IN RELATIONS TO STATISTICAL METHOD 19
2.2.3 BOUNDING ANALYSIS CONCLUSIONS 19
2.3 LARGE EARLY RELEASE FREQUENCY ANALYSIS 20
2.4 EXTERNAL EVENT EVALUATION 21
2.4.1 Internal Fire 21
2.4.2 External Events 21
3.0 CONCLUSION 22
4.0 REFERENCES 22

Appendix A Station Blackout Event Tree Adjustments

Appendix B Human Reliability Analysis

Appendix C Data Analysis for Defective Diode Installed in Voltage Regulator Card

Appendix D DG2 Voltage Control Board Diode Failure FIRE-LOOP Evaluation

Appendix E Time Weighted LOOP Recoveries for SBO Sequences

Incremental Change in Core Damage Probability Resulting from Degraded Voltage Regulator Diode Installed in the Division 2 Diesel Generator

EXECUTIVE SUMMARY

A focused probabilistic Risk assessment (PRA) based on the Cooper Nuclear Station PRA model and the CNS SPAR model has been performed to evaluate the safety significance of a January 18, 2007, run failure of the division 2 emergency diesel generator (DG-GEN-DG2). This assessment concluded that the increased risk can be characterized as very low in significance in terms of incremental change in core damage probability resulting from at power internal and external events.

The run failure of DG-GEN-DG2 was the result of a diesel generator trip from an over voltage condition that occurred during routine surveillance testing. The failure occurred approximately 4 hours into the surveillance run with the diesel generator synchronized to the grid. Investigation found the over voltage condition was caused by an open circuit failure of a diode on the voltage regulator card for DG-GEN-DG2. The voltage regulator card was installed in DG-GEN-DG2 during refueling outage RE23 on November 8, 2006. Dissection of the diode at a laboratory found that the open circuit was caused by a poor electrical connection inside the diode package. Cross sectioning of the failed diode showed that connections between the die and the heat sinks were at best marginal and that these marginal connections were the result of a manufacturing defect. This manufacturing defect manifested itself as a random and intermittent open circuit failure of the diode.

This assessment evaluates safety significance of this manufacturing defect in terms of incremental change in core damage probability (ICCDP). The ICCDP reflects the overall change in risk resulting from at power operations of Cooper Nuclear Station (CNS) while the defective voltage regulator diode was installed in DG-GEN-DG2. The resulting ICCDP, computed with the CNS PRA model of record is 1.351E-08 and is summarized in the following table.

ICCDP Derivation

Base CDF for CNS Full Power Operation	1.359E-05/Yr
Bounding Conditional CDF resulting from Defective Diode	1.3678E-05/Yr
Change in CDF resulting from Defective Diode	8.806E-08/Yr
Duration of Full Power Operations with Defective Diode	56 Days
ICCDP Resulting from Defective Diode	1.351E-08

The risk significance of the condition is characterized as very low significance. This is based on the fact that the ICCDP is below an established threshold of safety significance set at 1.0E-06. This risk significance threshold is used in various PSA applications including the Nuclear Regulatory Commission Significance Determination Process, and the Maintenance Rule Configuration Risk Assessments (10.CFR50.65(a)(4)).

An additional bounding ICCDP evaluation was also performed. This evaluation also characterized risk as very low in significance with an ICCDP that was less than 1.0E-06. It was performed using the CNS SPAR model. It is important to note that incremental change to Large Early Release Probability is negligible and less than 1.0E-07 based on the fact that ICCDP is less

than 1.0E-07. However, a qualitative evaluation of LERF impact was provided. This qualitative evaluation found that change in LERF was negligible.

The DG2 over voltage trip also resulted in very low risk change in terms of large early release frequency (LERF), and core damage probability resulting from external events. Both the change in LERF and core damage probability resulting from external events is characterized as very low in safety significance.

Incremental Change in Core Damage Probability Resulting from Degraded Voltage Regulator Diode Installed in the Division 2 Diesel Generator

NOMENCLATURE

CDF	Core Damage Frequency
CNS	Cooper Nuclear Station
ICCDP	Incremental Change in Core Damage Probability
ICLERP	Incremental Change in Large Early Release Probability
DG	Diesel Generator
DG-GEN-DG2	Division 2 Emergency Diesel Generator
DIV I	Division I
DIV II	Division II
HEP	Human Error Probability
HPCI	High Pressure Coolant Injection
IPE	Individual Plant Examination
LERF	Large Early Release Frequency
LOOP	Loss of Offsite Power
LOSP	Loss of Offsite Power
NRC	United States Nuclear Regulatory Commission
PDS	Plant Damage State
PRA	Probabilistic Risk Analysis
PSA	Probabilistic Safety Assessment
RPV	Reactor Pressure Vessel
SDP	Significance Determination Process

Incremental Change in Core Damage Probability Resulting from Degraded Voltage Regulator Diode Installed in the Division 2 Diesel Generator

DEFINITIONS

Accident sequence - a representation in terms of an initiating event followed by a combination of system, function and operator failures or successes, of an accident that can lead to undesired consequences, with a specified end state (e.g., core damage or large early release). An accident sequence may contain many unique variations of events (minimal cut sets) that are similar.

Core damage – uncovery and heat-up of the reactor core to the point at which prolonged oxidation and severe fuel damage is anticipated and involving enough of the core to cause a significant release.

Core damage frequency - expected number of core damage events per unit of time.

Cutsets - Accident sequence failure combinations.

End State - is the set of conditions at the end of an event sequence that characterizes the impact of the sequence on the plant or the environment. End states typically include: success states, core damage sequences, plant damage states for Level 1 sequences, and release categories for Level 2 sequences.

Event tree - a quantifiable, logical network that begins with an initiating event or condition and progresses through a series of branches that represent expected system or operator performance that either succeeds or fails and arrives at either a successful or failed end state.

Initiating Event - An initiating event is any event that perturbs the steady state operation of the plant, if operating, or the steady state operation of the decay heat removal systems during shutdown operations such that a transient is initiated in the plant. Initiating events trigger sequences of events that challenge the plant control and safety systems.

Large early release - the rapid, unmitigated release of airborne fission products from the containment to the environment occurring before the effective implementation of off-site emergency response and protective actions.

Large early release frequency - expected number of large early releases per unit of time.

Level 1 - identification and quantification of the sequences of events leading to the onset of core damage.

Level 2 - evaluation of containment response to severe accident challenges and quantification of the mechanisms, amounts, and probabilities of subsequent radioactive material releases from the containment.

Plant damage state - Plant damage states are collections of accident sequence end states according to plant conditions at the onset of severe core damage. The plant conditions considered are those that determine the capability of the containment to cope with a severe core damage

accident. The plant damage states represent the interface between the Level 1 and Level 2 analyses.

Probability - is a numerical measure of a state of knowledge, a degree of belief, or a state of confidence about the outcome of an event.

Probabilistic risk assessment - a qualitative and quantitative assessment of the risk associated with plant operation and maintenance that is measured in terms of frequency of occurrence of risk metrics, such as core damage or a radioactive material release and its effects on the health of the public (also referred to as a probabilistic safety assessment, PSA).

Release category - radiological source term for a given accident sequence that consists of the release fractions for various radionuclide groups (presented as fractions of initial core inventory), and the timing, elevation, and energy of release. The factors addressed in the definition of the release categories include the response of the containment structure, timing, and mode of containment failure; timing, magnitude, and mix of any releases of radioactive material; thermal energy of release; and key factors affecting deposition and filtration of radionuclides. Release categories can be considered the end states of the Level 2 portion of a PSA.

Risk - encompasses what can happen (scenario), its likelihood (probability), and its level of damage (consequences).

Severe accident - an accident that involves extensive core damage and fission product release into the reactor vessel and containment, with potential release to the environment.

Vessel Breach - a failure of the reactor vessel occurring during core melt (e.g., at a penetration or due to thermal attack of the vessel bottom head or wall by molten core debris).

Incremental Change in Core Damage Probability Resulting from Degraded Voltage Regulator Diode Installed in the Division 2 Diesel Generator

1.0 INTRODUCTION

On January 18, 2007, DG-GEN-DG2 tripped after running for approximately 4 hours during a surveillance test. The trip resulted from an over voltage condition. The over voltage condition resulted from an open circuit failure of a defective diode contained on the voltage regulator card for DG-GEN-DG2.

1.1 PURPOSE

In order to assist in a significance determination of the DG-GEN-DG2 trip, a risk assessment is provided herein. The card with the defective diode was installed on November 8, 2006 during refuel outage, RE23. Cooper Nuclear Station resumed full power operations from RE23 on November 23, 2006. Based on this timeline, this risk assessment evaluates this condition for an exposure time of 56 days. This risk assessment predicts the incremental change in core damage probability (ICCDP) and relates the significance of the risk increase using industry established ICCDP thresholds.

The risk assessment also evaluates impacts to the baseline Large Early Release Frequency (LERF) as well as core damage probabilities attributed to external events.

1.2 BACKGROUND

1.2.1 Discussion of the AC Electrical Power System at CNS

The station electrical power systems provide a diversity of dependable power sources which are physically isolated. The station electrical power systems consist of the normal and startup AC power source, the emergency AC power source, the 4160 volt and 480 volt auxiliary power distribution systems, standby AC power source, 125 and 250 volt DC power systems, 24 volt DC power system, 115/230 volt AC no break power system, and the 120/240 volt AC critical power system.

Figure 1.1 illustrates the power supplies and distribution for the station loads at the 4160 volt AC bus level.

The normal AC power source provides AC power to all station auxiliaries and is the normal AC power source when the main generator is operating. The startup AC power source provides AC power to all station auxiliaries and is normally in use when the normal AC power source is unavailable.

The emergency AC power source provides AC power to emergency station auxiliaries. It is normally used to supply emergency station auxiliary loads when the main generator is shutdown and the startup AC power source is unavailable.

The station 4160 volt and 480 volt auxiliary power distribution systems distribute all AC power necessary for startup, operation, or shutdown of station loads. All portions of this distribution system receive AC power from the normal AC power source or the startup AC power source. The critical service portions of this distribution system also can receive AC power from the standby AC power source or the emergency AC power source.

Incremental Change in Core Damage Probability Resulting from Degraded Voltage Regulator Diode Installed in the Division 2 Diesel Generator

The standby AC power source provides two independent 4160 volt DGs as the on-site sources of AC power to the critical service portions of the auxiliary power systems. Each DG provides AC power to safely shutdown the reactor, maintain the safe shutdown condition, and operate all auxiliaries necessary for station safety.

The above power sources are integrated into the following protection scheme to insure that the CNS emergency loads will be supplied at all times.

> If the normal station service transformer (powered by the main generator) is lost, the startup station service transformer, which is normally energized, will automatically energize 4160 volt buses 1A and 1B as well as their connected loads, including the critical buses. If the startup station service transformer fails to energize the critical buses, the emergency station service transformer, which is normally energized, will automatically energize both critical buses. If the emergency station service transformer were also to fail, the DGs would automatically energize their respective buses.

The defective diode was installed in the voltage regulator for 56 days while CNS was at power. The voltage regulator card was part of the excitation control for DG-GEN-DG2 (illustrated as diesel generator #2 in Figure 1.1). All other power sources available to the 4160 Volt AC buses remained available and unaffected by the defective diode.

Figure 1.1 Cooper Nuclear Station Single Line, 4160 Volt Distribution

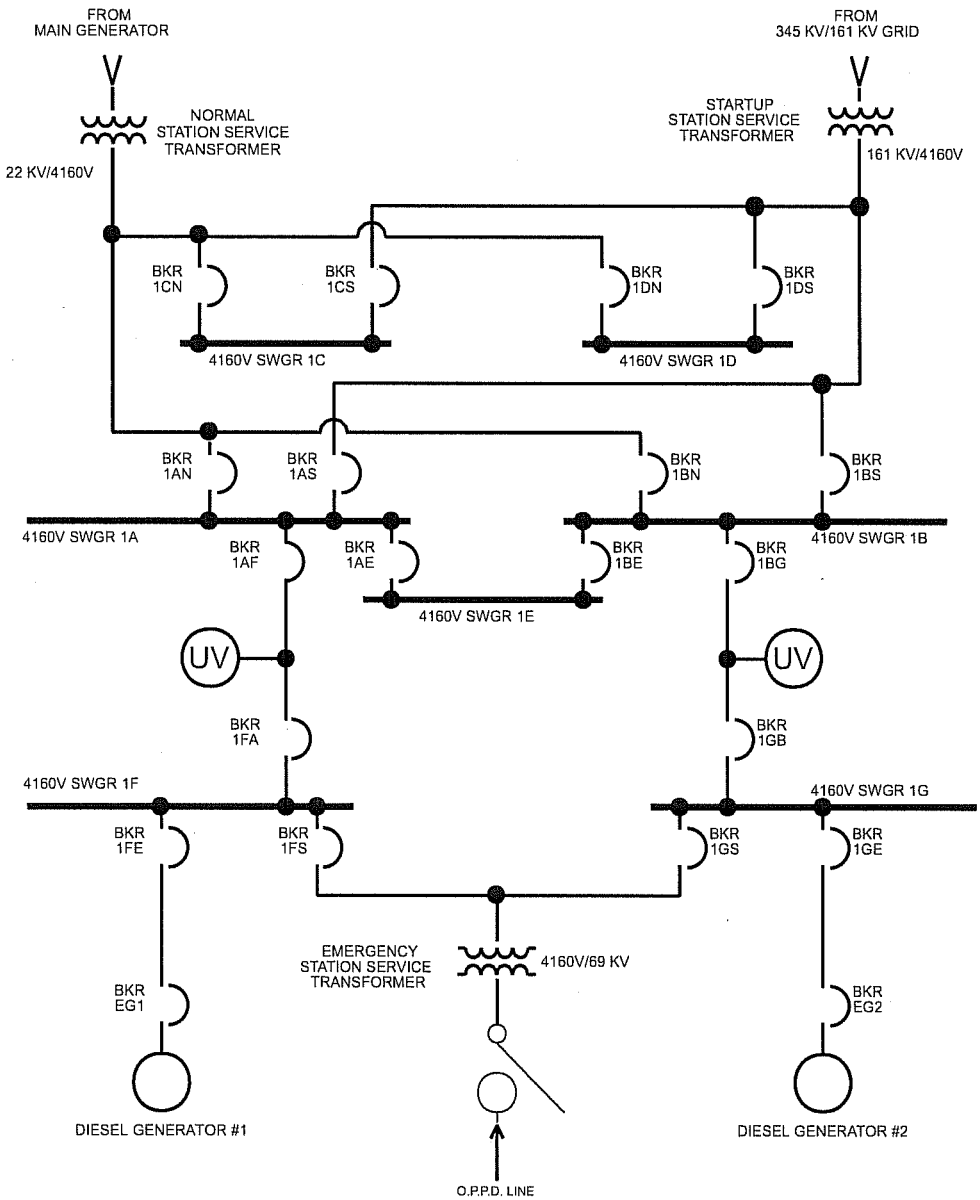

1.2.2 Defective Diode's Impact on Normal Operation

During normal operations the DG-GEN-DG2 is not required to provide power to support plant loads. DG-GEN-DG2 is tested during normal operations and electrical load is supplied through synchronization of DG2 to the offsite power grid. Protective relaying is provided to prevent impact to normal operations should DG-GEN-DG2 encounter electrical failures while being tested. These protective devices remained fully operation while the defective diode was installed. Thus, installation of the defective diode had no impact on normal plant operations and resulted in negligible increase in the frequency of occurrence of plant events.

1.2.3 Defective Diode's Impact on Emergency Operation

During a plant emergency, which includes the inability to provide power to the 4160 Volt AC buses with offsite power, DG-GEN-DG2 is the remaining power source for 4160 critical bus 1G.

The defective diode installed in DG-GEN-DG2 affected the ability of the generator's excitation controls to regulate voltage. The defective diode's open circuit failure mode resulted in an over voltage condition which tripped DG-GEN-DG2 rendering it incapable of providing power to 4160 Volt AC bus 1G in the automatic voltage control mode.

It should also be noted that the defective diode is a subcomponent of the automatic voltage regulating portion of DG-GEN-DG2. DG-GEN-DG2 would be fully recoverable when started and loaded to bus 1G using the manual voltage regulating controls provided locally in the diesel generator room.

2.0 EVALUATION

This section evaluates the specific increase in risk resulting from the defective diode found in DG-GEN-DG2 and documents other bounding analysis completed to provide key insights into the overall risk significance of the defective diode.

Section 2.1 evaluates the incremental increase in core damage probability that results from the risk increase caused by the defective diode installed in the voltage regulator card. This section provides the specific conclusions of overall risk impact.

Section 2.2 provides bounding analysis to further substantiate the conclusions provided in section 2.1.

Sections 2.3 and 2.4 discuss external events and large early release frequency changes that resulted from the defective diode.

2.1 SPECIFIC INCREASE IN RISK RESULTING FROM THE DEFECTIVE DIODE

2.1.1 ASSUMPTIONS AND CHARACTERISTICS OF THE MODEL

1) The CNS 2006TM PRA model and the NRC CNS SPAR model (Revision 3.31, dated October 10, 2006) were applicable for use in this evaluation.

2) Quantification was truncated at 1.0E-12 to ensure results captured all relative combinations in the PRA sequences.

3) The condition evaluated is limited to the time in which the defective diode was installed during at power conditions. This was approximated as the time in which reactor power was above turbine bypass valve capacity and correlates to the period starting November 23, 2006 to January 18, 2007. The exposure period for the condition is 56 days.

4) Fire water injection for the purposes of reactor inventory makeup and cooling is not credited in this evaluation. It should be noted, however, that this injection source is viable and available for mitigation of SBO sequences. The use of the diesel driven fire protection pump has been identified as a mitigation system during several emergency drills by the Emergency Response Organization. The system provides RPV injection through one of three possible hose connections to the RHR system. The procedure (5.3ALT_STRATEGY) and equipment needed to accomplish RPV injection using the fire protection pump are in place.

5) The ability to black start DG-GEN-DG1 or DG2 was not credited in this study. Procedures are in place at CNS (5.3 ALT_STRATEGY) that direct the "black start" of a diesel generator. This means a DG can be started and tied to the critical AC bus after the station batteries are depleted.

6) The diesel generator "fail to run" failure rate and probability contained in the CNS SPAR model of record (Reference 3) will be used for this evaluation to allow a more direct comparison between CNS PRA results and the CNS SPAR Model results. This failure probability is defined as 2.07E-02 in the SPAR model.

7) Both the CNS PRA Model and SPAR Model event trees for station blackout will use the actual battery depletion times documented in CNS PRA internal events analysis. Refer to Appendix A for details on these depletion times.

8) The failure rate for the defective diode was derived per the guidance of NUREG CR6823 (Reference 4). This derivation included Bayesian estimation through application of a constrained noninformative prior to best represent failure rates given the existing diesel generator failure data available in the PRA models and the small amount of run time experienced by the defective diode. See Appendix C for derivation of the defective diode failure rates. Further sensitivity analysis was provided to ensure that bounding diode failure rates using other statistical approaches result in negligible risk increase (refer to Section 2.2.2).

9) Actual failures of the defective diode while installed in the excitation control circuit for DG-GEN-DG2 has been determined to be 1 (one) for the purposes of failure rate derivations.

   Evaluation of performance leading to the over voltage trip of DG-GEN-DG2 on January 18, 2007 and subsequent root cause lab testing found that there were two other instances that could be attributed to the open circuit failure condition of the defective diode. However both of these instances were dismissed as follows:

   During post maintenance testing of DG-GEN-DG2 on November 11, 2006, an over voltage condition was noted while tuning the control circuit that contained the defective diode. Because this testing did not provide conclusive evidence that the diode was the cause of the over voltage condition and because DG-

GEN-DG2 demonstrated over 24 hours of successful run time after occurrence of the November 11, 2006 condition, this instance is dismissed as a attributable failure of the defective diode.

A post failure test of the circuit card that included the defective diode resulted in both satisfactory card operation followed by unsatisfactory card operation with subsequent determination that the defective diode was in a permanent open circuit state. This lab testing failure has been dismissed in this study due to the large amounts of variability introduced by shipping of the card to the lab, the differences between lab bench top testing and actual installed conditions, and equipment and human errors that could be attributed to test techniques.

Section 2.2 provides analysis to address sensitivity in the assumption of number of actual diode failures.

10) Expected operator actions that would be taken to recover from the over voltage trip that was experienced on January 18, 2007 include a successful restart of DG-GEN-DG2 and loading of the generator using the manual voltage controls provided locally in the diesel generator room. The diagnosis and performance of this recovery has been determined to have a non-recovery probability of 3.0E-02. The detailed evaluation for this human reliability analysis is included in Appendix B.

11) The CNS Level 1 and Level 2 PRA Model was developed based on plant specific functions and system success criteria for each of the important safety functions and support systems relied upon for accident prevention or mitigation for the duration of 24 hours following an event. The systems included in the model were those that supported the overall objective of maintaining adequate core and containment cooling. There are two figures-of-merit for meeting these objectives: core damage frequency and large early release frequency. The definitions used in this study are consistent with the CNS PRA.

12) For the purposes of this study, the mission time for the DG run was assumed to be 24 hours. To compensate for this overly conservative assumption, the sensitivity study in Section 2.2.2 includes sequence dependent time-weighted offsite power non-recovery probabilities. The derivation of these non-recovery probabilities is discussed in Appendix E. The Diesel Generator failure-to-run events are treated in the CNS PRA with a lumped parameter approximation. All run failures are treated as failures occurring at accident initiation (t=0). This treatment results in not accounting for diesel offsite power recovery at extended times associated with these failure modes even though adequate AC power is available during the initial diesel run. To minimize the conservative impact of this lumped parameter assumption in the regular CNS PRA model (as opposed to the model used for this analysis), a run time of 8 hours is used in establishing run failure probability. This is based on the following: The DG mission time accounts for two competing effects. The first is the running failure rate of the DG and the second is the recovery of offsite or on-site AC power. All cutsets with a DG fail to run event must also include an offsite or on-site AC power non-recovery event. The time dependent product of these two events is maximized at about 8 hours into the accident.

13) The offsite power non-recovery probability is dominated by weather related events beyond 6 hours into the accident. The initiating frequencies used in this study include costal effects such as sea spray and hurricanes. Due to the location of CNS, inclusion of these events results is overly conservative when included in non-recovery probabilities. The exclusion of these events from the LOOP non-recovery probabilities is appropriate; however, the events are included in the LOOP frequency.

2.1.2 DERIVATION OF ICCDP

Derivation of ICCDP resulting from the over voltage trip of DG-DEN-DG2 that occurred on January 18, 2007 provides the following results.

Base CDF	Conditional CDF Resulting from the Defective Diode	Change in CDF	Exposure (days)	Incremental Change in Core Damage Probability
1.359E-05/Yr	1.3678E-05/Yr	8.806E-08/Yr	56	1.351E-08

2.1.2.1 Base CDF Quantification

Base CDF was derived by quantification of the CNS PRA model of record with the following adjustments to best fit this application.

1. The diesel generator fail to run basic event probabilities were changed to reflect those in the SPAR model. Specifically, basic events EAC-DGN-FR-DG1 and EAC-DGN-FR-DG2 probabilities were changed from 1.45E-03 to 2.07E-02. This was done to allow a better comparison between SPAR results and CNS PRA model results. This also changed the DG mission times to 24 hours as opposed to the 8 hours that is normally used in the CNS PRA model.

2. Loss of offsite power frequencies and recoveries were revised to best reflect current industry performance data. NUREG CR 6890 (Reference 2) was used to derive these new values. These values are reflected in Table 2.1.2-1. This table also details the 10 and 12 hour DG recoveries required to support the event tree adjustments made in Appendix A. All DG recoveries were obtained using the existing CNS PRA model basis documents. (Reference 6).

3. The SBO portions of the event trees were revised to better reflect the SPAR SBO structure. The SBO portion of the event trees were also revised to extend recovery times. This accurately models actual battery depletion times that are in excess of those currently modeled. Refer to Appendix A for further discussions on the event tree revisions.

Table 2.1.2-1 Loss of Offsite Power Frequency and Non-recovery Updates

NAME	DESCRIPTION	PROBABILITY
%T1G-INIT	Grid Centered Loss Of Offsite Power	7.18E-03
%T1P-INIT	Plant Centered Loss Of Offsite Power	1.31E-02
%T1W-INIT	Weather Centered Loss Of Offsite Power	4.83E-03
NR-DG-10HR	Non-Recovery Of DG Within 10 Hours	2.60E-01
NR-DG-12HR	Non-Recovery Of DG Within 12 Hours	2.40E-01
NR-LOSP-G10HR	Conditional Non-Recovery Grid Centered Off-Site Power In 10hr	3.64E-02
NR-LOSP-G12HR	Conditional Non-Recovery Grid Centered Off-Site Power In 12hr	2.42E-02
NR-LOSP-G1HR	Non-Recovery Of Grid-Centered LOSP Within 1 Hr	3.73E-01
NR-LOSP-G24HR	Conditional Non-Recovery Of Grid Centered Off-Site Power In 24 Hrs	4.15E-03
NR-LOSP-G6HR	Conditional Non-Recovery Of Grid Centered Off-Site Power In 6 Hrs	9.76E-02
NR-LOSP-G8HR	Conditional Non-Recovery Of Grid Centered Off-Site Power In 8 Hr	5.73E-02
NR-LOSP-P10HR	Conditional Non-Recovery Plant Centered Off-Site Power In 10hr	2.48E-02
NR-LOSP-P12HR	Conditional Non-Recovery Plant Centered Off-Site Power In 12hr	1.71E-02
NR-LOSP-P1HR	Non-Recovery Of Plant-Centered LOSP Within 1 Hr	1.18E-01
NR-LOSP-P24HR	Conditional Non-Recovery Of Plant Centered Off-Site Power In 24 Hrs	3.49E-03
NR-LOSP-P6HR	Conditional Non-Recovery Of Plant Centered Off-Site Power In 6 Hrs	6.42E-02
NR-LOSP-P8HR	Conditional Non-Recovery Of Plant Centered Off-Site Power In 8 Hr	3.83E-02
NR-LOSP-W10HR	Conditional Non-Recovery Weather Off-Site Power In 10hr	2.89E-01
NR-LOSP-W12HR	Conditional Non-Recovery Weather Off-Site Power In 12hr	2.55E-01
NR-LOSP-W1HR	Non-Recovery Of Weather-Related LOSP Within 1 Hr	6.56E-01
NR-LOSP-W24HR	Conditional Non-Recovery Of Weather Centered Off-Site Power In 24 Hrs	1.48E-01
NR-LOSP-W6HR	Conditional Non-Recovery Of Weather Centered Off-Site Power In 6 Hrs	3.97E-01
NR-LOSP-W8HR	Conditional Non-Recovery Of Weather Off-Site Power In 8 Hr	3.34E-01

2.1.2.2 Conditional CDF Quantification

Conditional CDF was also quantified using the CNS model of record with the adjustments detailed for the base CDF. The defective diode was modeled as a new and separate event placed in the diesel generator fault tree as an input to gate EAC-DG2-007, "Diesel Generator DG2 Failures". The original DG2 fail-to-run event EAC-DGN-FR-DG2 was also retained in the tree. The defective diode probability was set at 5.70E-02 (see Appendix C) and adjusted to reflect a non-recovery probability of 0.03 (see Appendix B). The following represents the addition of defective diode modeling.

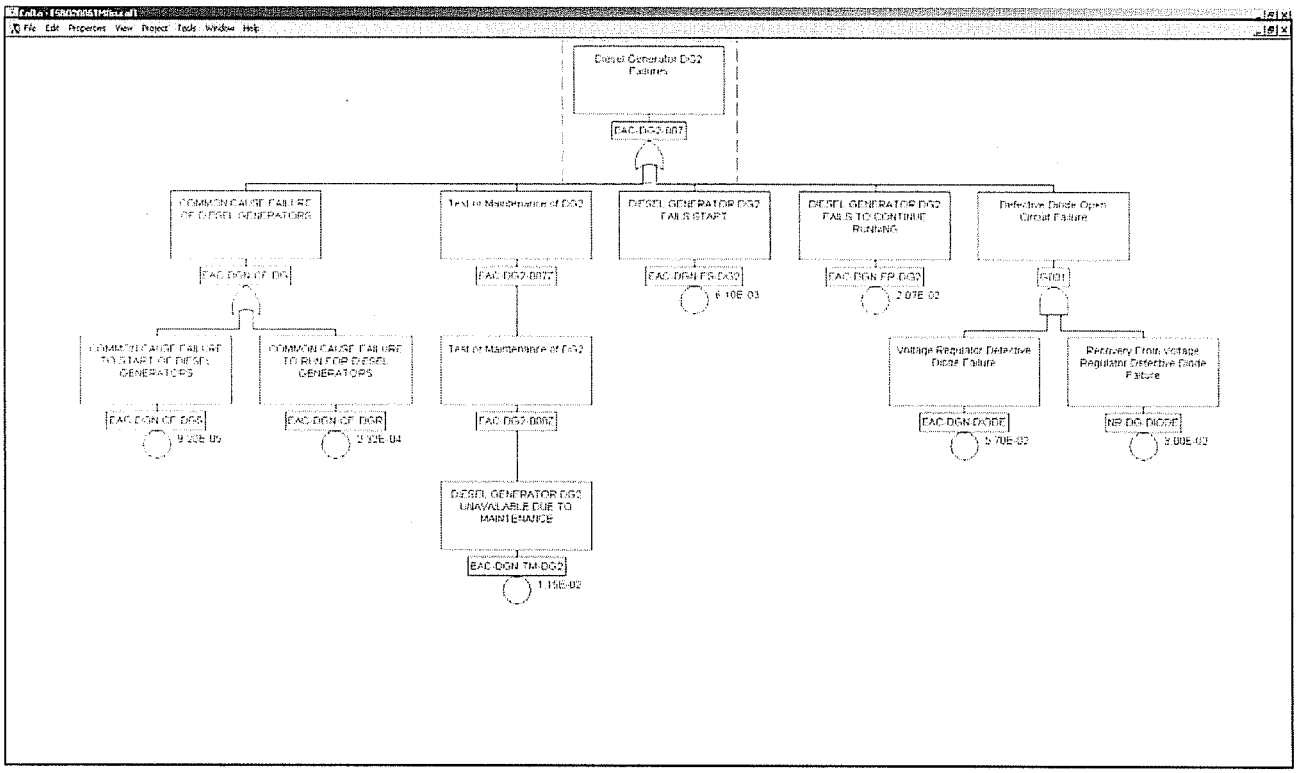

2.1.3 RISK SIGNIFICANCE CONCLUSIONS WITH RESPECT TO ICCDP

The exposure of DG-GEN-DG2 to the failure mode presented by the defective diode found in the voltage regulator card resulted in quantifiable increases in risk. Increase was quantified as an incremental change in core damage probability of 1.351E-08. This is judged as not risk significant and well below the risk significance ICCDP threshold of 1.0E-6 set for PRA applications.

The low significance is a result of a small exposure time (56 days), Cooper Nuclear Station design features that provide redundancy to DG-GEN-DG2, and the ability to recover from the diode's open circuit failure mode.

2.2 RISK INSIGHTS FROM BOUNDING ANALYSIS

The assumptions made for this risk change application were chosen to most accurately reflect conditions that existed at the time of the over voltage trip of DG-GEN-DG2 on January 18, 2007. Review of the assumptions found the following are key contributors in the overall derivation of ICCDP:

1. The non-recovery probability derived in Appendix B
2. The defective diode failure probability estimated in Appendix C
3. The statistical methodology used to determine the diode failure probability

This section performs bounding analysis using both SPAR and the CNS PRA models to provide insight with respect to the sensitivity of the diode non-recovery and failure probabilities.

2.2.1 ICCDP SENSITIVITY IN RELATION TO NON-RECOVERY AND DIODE FAILURE RATE

Tables 2.2.1-1 and 2.2.1-2, as well as Figure 2.2.1-1, represent the sensitivity of ICCDP in relation to both non-recovery probabilities and diode failure probabilities. Diode failure probabilities are varied to detail how the assumed number of failures experienced while the defective diode was installed affects overall ICCDP. Non-recovery probabilities are incremented in steps of 0.5 to provide relative sensitivity insights.

The ICCDP values were derived using the same methods outlined in Section 2.1 above. The SPAR model of reference was used including the adjustments detailed in Appendix A.

Incremental Change in Core Damage Probability Resulting from Degraded Voltage Regulator Diode Installed in the Division 2 Diesel Generator

Table 2.2.1-1 – ICCDP Sensitivity Using the CNS PRA Model

Number of diode failures in 36 hours>>>	1 failure (CNS MODEL w/Constrained Noninformative Prior)	2 failures (CNS MODEL w/Constrained Noninformative Prior)	3 failures (CNS MODEL w/Constrained Noninformative Prior)
Diode Failure Probability (24 hour mission)>>>	0.057	0.0939	0.129
DG Non-Recovery Probability ↓	ICCDP ↓	ICCDP ↓	ICCDP ↓
0.03	1.3511E-08	2.2258E-08	3.0578E-08
0.05	2.2519E-08	3.7097E-08	5.0964E-08
0.1	4.5038E-08	7.4194E-08	1.0193E-07
0.15	6.7557E-08	1.1129E-07	1.5289E-07
0.2	9.0076E-08	1.4839E-07	2.0386E-07
0.25	1.1259E-07	1.8548E-07	2.5482E-07
0.3	1.3511E-07	2.2258E-07	3.0578E-07
0.35	1.5763E-07	2.5968E-07	3.5675E-07
0.4	1.8015E-07	2.9678E-07	4.0771E-07
1	4.5038E-07	7.4194E-07	1.0193E-06

Table 2.2.1-2 – ICCDP Sensitivity Using the SPAR PRA Model

Number of diode failures in 36 hours>>>	1 failure (SPAR w/Constrained Noninformative Prior)	2 failures (SPAR w/Constrained Noninformative Prior)	3 failures (SPAR w/Constrained Noninformative Prior)
Diode Failure Probability (24 hour mission)>>>	0.057	0.0939	0.129
DG Non-Recovery Probability	ICCDP ↓	ICCDP ↓	ICCDP ↓
0.03	2.04874E-08	3.37503E-08	4.63662E-08
0.05	3.41457E-08	5.62505E-08	7.7277E-08
0.1	6.82913E-08	1.12501E-07	1.54554E-07
0.15	1.02437E-07	1.68751E-07	2.31831E-07
0.2	1.36583E-07	2.25002E-07	3.09108E-07
0.25	1.70728E-07	2.81252E-07	3.86385E-07
0.3	2.04874E-07	3.37503E-07	4.63662E-07
0.35	2.3902E-07	3.93753E-07	5.40939E-07
0.4	2.73165E-07	4.50004E-07	6.18216E-07
1	6.82913E-07	1.12501E-06	1.54554E-06

Figure 2.2.1-1 ICCDP Sensitivity with Respect to Defective Diode Failure and DG Non-recovery Probabilities

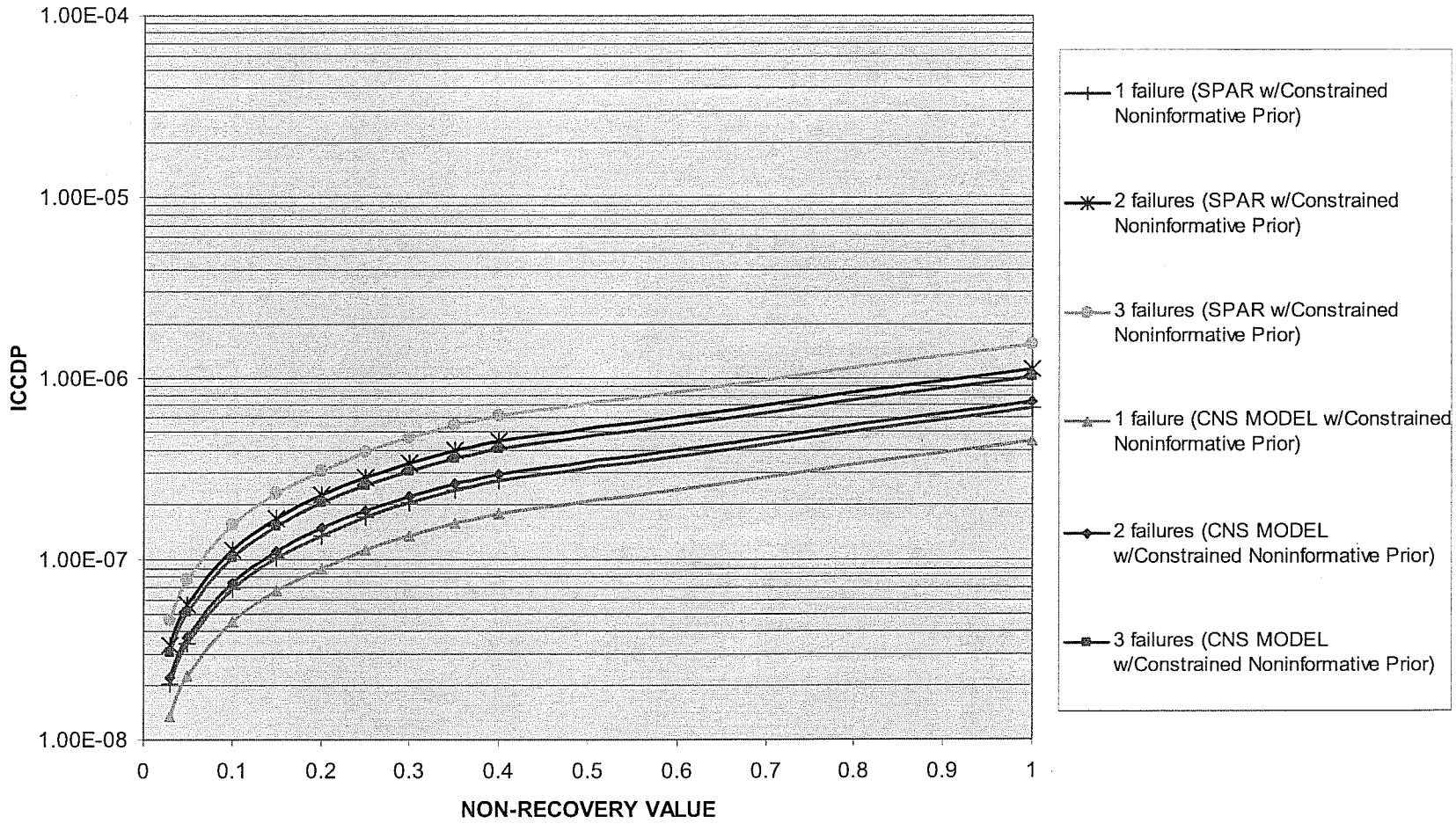

2.2.2 ICCDP SENSITIVITY IN RELATIONS TO STATISTICAL METHOD

A bounding ICCDP was also derived using a conservative statistical approach in which a maximum likelihood estimation was applied

This bounding analysis assumed two failures of the defective diode occurred in 36 hours of run time. The maximum likelihood estimation (MLE) allows the diode failure probability to be calculated directly through use of Poisson as follows:

$(1\text{-Exp}(-\lambda_{new} *24))$, or

$(1\text{-Exp}(-(2/36) *24)) = 0.736$

This diode failure probability increases the actual ICCDP derived in section 2.1 by a factor of 8.5. This increase approaches the risk significance threshold of 1.0E-06. Further evaluation found it prudent to adjust ICCDP to account for the conservatism resulting in the assumption that all diesel generator run failures occur at the start of station blackout events. This adjustment is similar to application of the convolution integral and is detailed in Appendix E. Results of application of Appendix E, specifically Tables 5.1 through 5.3, results are as follows:

Table 2.2.2-1 Diode Failure Probability as a Function of DG Non-Recovery Probability

Number of diode failures in 36 hours>>>	2 failures (CNS MODEL w/ MLE and Time Weighted NR-LOSP)
Diode Failure Probability (24 hour mission)>>>	0.736402862
DG Non-Recovery Probability ↓	ICCDP ↓
0.03	1.01345E-07
0.05	1.68909E-07
0.1	3.37817E-07
0.15	5.06726E-07
0.2	6.75634E-07
0.25	8.44543E-07
0.3	1.01345E-06
0.35	1.18236E-06
0.4	1.35127E-06
1	3.37817E-06

2.2.3 BOUNDING ANALYSIS CONCLUSIONS

Sensitivity results support the overall conclusion that the ICCDP risk increase resulting from the installation of the defective diode is below the threshold of risk significance. This is supported by both the SPAR and CNS PRA models.

Sensitivity results detail that the extremes of both the diode failure probabilities and non-recovery probabilities would have to be applied to push the ICCDP above the risk significance threshold of

1.0E-06. These extremes, though insightful, are judged not to be viable or representative of the actual conditions that existed at the time of the over voltage trip of DG-GEN-DG2.

2.3 LARGE EARLY RELEASE FREQUENCY ANALYSIS

It is important to note that incremental change to Large Early Release Probability is negligible and less than 1.0E-07 based on the fact that ICCDP is less than 1.0E-07. However, a qualitative evaluation of LERF impact was provided. This qualitative evaluation found that change in LERF was negligible. The qualitative evaluation is provided below.

The LERF consequences of exposure to the defective diode were similar to those documented in a previous SDP Phase 3 evaluation regarding a misalignment of gland seal water to the service water pumps (Reference 5). The following excerpt from NRC Special Inspection Report 2007007 addresses the LERF issue:

The NRC reevaluated the portions of the preliminary significance determination related to the change in LERF. In the regulatory conference, the licensee argued that the dominant sequences were not contributors to the LERF. Therefore, there was no change in LERF resulting from the subject performance deficiency. Their argument was based on the longer than usual core damage sequences, providing for additional time to core damage, and the relatively short time estimated to evacuate the close in population surrounding Cooper Nuclear Station.

LERF is defined in NRC Inspection Manual Chapter 0609, Appendix H, "Containment Integrity Significance Determination Process" as: "the frequency of those accidents leading to significant, unmitigated release from containment in a time frame prior to the effective evacuation of the close-in population such that there is a potential for early health effect." The NRC noted that the dominant core damage sequences documented in the preliminary significance determination were long sequences that took greater than 12 hours to proceed to reactor pressure vessel breach. The shortest calculated internal from the time reactor conditions would have met the requirements for entry into a general emergency (requiring the evacuation) until the time of postulated containment rupture was 3.5 hours. The licensee stated that the average evacuation time for CNS, from the declaration of a General Emergency was 62 minutes.

The NRC determined that, based on a 62-minute average evacuation time, effective evacuation of the close-in population could be achieved within 3.5 hours. Therefore, the dominant core damage sequences affected by the subject performance deficiency were not LERF contributors. As such, the NRC's best estimate determination of the change in LERF resulting from the performance deficiency was zero. In the current analysis, the total contribution of the 30-minute sequences to the current case CDF is only 0.17% of the total. For two hour sequences, the contribution is only 0.04 percent. That is, almost all of the risk associated with this performance deficiency involves sequences of duration four hours or longer following the loss of all ac power.
Based on the average 62 minute evacuation time as documented above, the analyst determined that large early release did not contribute to the significance of the current finding.

This same excerpt is true for this analysis also.

2.4 EXTERNAL EVENT EVALUATION

2.4.1 Internal Fire

An evaluation of this condition with respect to fire initiated accidents concluded that the ICCDP due to these initiators is not a significant contributor to the overall condition ICCDP, and does not warrant inclusion into the overall quantitative results.

While some postulated CNS fires can cause a loss of offsite power requiring the use of the Diesel Generators, manual recovery of the offsite power does not require repair activities and is relatively easy. The bulk of the postulated fires do not cause an unintentional LOOP. Rather, they cause abandonment of the main control room and a procedurally administrated LOOP. Only two fires can actually cause an unintentional LOOP. These are a fire in control room board C or a fire in the control room vertical board F. Multiple hot shorts in either of these locations can cause the emergency and startup transformer breakers to open. The breakers to the emergency transformers do NOT lock out in a manner that prevents recovery from inside the plant. Recovery from these events involves pulling the control power fuses at the breakers and operating the beakers manually. Considerable procedural guidance is available for these actions.

The IPEEE Internal Fire Analysis conservatively estimated that the probability of a fire induced LOOP is almost an order of magnitude lower that the 1E-6 ICCDP cutoff frequency.

2.4.2 External Events

The contribution to the ICCDP from external events is considered to be insignificant. The NRC in IR07-07 determined that the risk increase from external events (seismic and flooding) "did not add significantly to the risk of the finding". This was based on a condition that the DG2 ran for 4 hours before failing and is a follows:

As a sensitivity, data from the RASP External Events Handbook was used to estimate the scope of the seismic risk particular to this finding. The generic median earthquake acceleration assumed to cause a loss of offsite power is 0.39. The estimated frequency of earthquakes at CNS of this magnitude or greater is 9.828E-5/yr. The generic median earthquake frequency assumed to cause a loss of the diesel generators is 3.19, though essential equipment powered by the EDGs would likely fail at approximately 2.0g. The seismic information for CNS is capped at a magnitude of 1.0g with a frequency of 8.187E-6. This would suggest that an earthquake could be expected to occur with an approximate frequency of 9.0E-5/yr that would remove offsite power but not damage other equipment important to safe shutdown. In the internal events discussion above, it was estimated that LOOPS that exceeded four hours duration would occur with a frequency of 3.91 E-3/yr. Most LOOP events that exceed the four hour duration would likely have recovery characteristics closely matching that from an earthquake. The ratio between these two frequencies is 43. Based on this, the analyst qualitatively concluded that the risk associated with seismic events would be small compared to the internal result.

Flooding could be a concern because of the proximity to the Missouri River. However, floods that would remove offsite power would also likely flood the EDG compartments

and therefore not result in a significant change to the risk associated with the finding. The switchyard elevation is below that of the power block by several feet, but it is not likely that a slight inundation of the switchyard would cause a loss of offsite power. The low frequency of floods within the thin slice of water elevations that would remove offsite power for at least four hours, but not render the diesel generators inoperable, indicates that external flooding would not add appreciably to the risk of this finding.

Based on the above, the analyst determined that external events did not add significantly to the risk of the finding.

The above logic remains valid when the four hour DG2 run assumption is eliminated and a random intermittent voltage regulator board diode failure is assumed. In addition, external floods applicable to CNS are very slow developing events. The plant would have one to three days warning. Plant procedures require the plant to be shut down, depressurized, and the vessel flooded with the head vents open when flood levels are anticipated to exceed the 902 level.

3.0 CONCLUSION

When examining the risk significance resulting from the installation of the defective diode contained in the voltage regulator controls for DG-GEN-DG2, it was concluded that increases in core damage probability and LERF were below risk significant thresholds established by the industry.

Consideration of the uncertainties involved in significance determination process (probabilistic risk assessments) was alternatively addressed by separately evaluating bounding cases using conservative inputs and assumptions.

The conclusion is that the safety impact associated with the defective diode is not risk significant.

4.0 REFERENCES

1. NRC Special Inspection Report 2007007, dated May 22, 2007, from Arthur T. Howell III, to Stewart B. Minehan

2. NUREG CR 6890, Reevaluation of Station Blackout Risk at Nuclear Power plants, published December, 200

3. CNS SPAR model version 3.3.1, dated October 10, 2006

4. NUREG CR 6823, Handbook of Parameter Estimation for Probabilistic Risk Assessment, Published September, 2003

5. Cooper Nuclear Station - NRC Inspection Report 05000298/2004014 - Final Significance Determination for a Preliminary Greater than Green Finding, dated March 31, 2005, from Arthur T. Howell III, to Randall K. Edington

6. AC Power Recovery Evaluation, Prepared by Erin Engineering and Research, Inc, dated October 1995

7. ASME RA-S-2002, Standard for Probabilistic Risk Assessment for Nuclear Power Plant Applications and Addenda ASME RA-Sb-2005

APPENDIX A

STATION BLACKOUT EVENT TREE ADJUSTMENTS

The Station Black-out (SBO) portion of the CNS Loss of Offsite Power (LOOP) event tree was modified to reflect updated timing insights gained through thermal hydraulic and battery depletion calculations performed to support the PRA upgrade project. Of particular importance to SBO mitigation are timing for potential challenges to high pressure injection systems (HPCI and RCIC) and individual battery depletion timing (with and without load shed). The revised LOOP event tree considers updated information regarding:

1) Battery depletion timing for each DC bus,
2) Potential RPV low pressure isolation challenges due to operator actions to emergency depressurize the RPV in response to EOP required actions on Heat Capacity Temperature Limit (HCTL), Pressure Suppression Pressure (PSP), and high drywell temperature,
3) Potential equipment trips due to high exhaust back pressure,
4) Potential suction source impacts associated with ECST depletion or suction temperature if automatic suction swap to the suppression pool is anticipated, and
5) Post event room heat-up impacts on equipment reliability.

Use of the on-site diesel driven fire pump was added to the event tree for potential credit provided initial success of HPCI or RCIC, but was given a failure probability of 1.0 for this study.

The failure probability for actions to extend HPCI or RCIC operation was assumed to be 0.06. This assumption was utilized for consistency in comparing results to SPAR modeling and is considered a conservative estimate of the failure probability given the relatively long time to accomplish the relatively simple human actions (e.g. gravity fill of ECST, shedding one large DC load, etc.).

Figure A-1 shows a graphical representation of the revised LOOP event tree. The new core damage sequences are named T1SBO-1 through T1SBO-8 and are described as follows:

<u>Sequence T1SBO-1: /U2*/RCI-EXT*/X1*V5*REC-LOSP-DG12H</u>

Following a LOOP with failure of the emergency diesel generators, RCIC (U2) provides initial inventory make-up to the RPV. Manual operator actions to extend RCIC operation are considered successful at a 94% probability. Successful depressurization (X1) in support of fire water injection occurs, but fire water injection (V5) fails (assumed 1.0 failure probability in this analysis). Recovery of AC power within 12 hours is not successful for this sequence, resulting in core damage. Twelve hours is allowed to recover AC power based on calculation NEDC 07-053, which documents a limiting division 1 (RCIC supply) battery capability for providing all required loads for 11 hours without any load shedding. Due to extended boil-off time an additional hour is allowed to recover AC power prior to core damage.

Sequence T1SBO-2: /U2*/RCI-EXT*X1*REC-LOSP-DG12H

Same as sequence T1SBO-1, except depressurization of the RPV fails resulting in failure of fire water injection (V5). The basis for AC recovery is the same as described for sequence T1SBO-1.

Sequence T1SBO-3: /U2*RCI-EXT*/X1*REC-LOSP-DG10H

Following a LOOP with failure of the emergency diesel generators, RCIC (U2) provides initial inventory make-up to the RPV. Manual operator actions to extend RCIC operation are considered failed at a 6% probability. Successful depressurization (X1) in support of fire water injection occurs, but fire water injection (V5) fails (assumed 1.0 failure probability in this analysis). Recovery of AC power within 10 hours is not successful for this sequence, resulting in core damage. Ten hours is allowed to recover AC power based on the limiting time for manual operator action for any anticipated challenge to continued RCIC operation. The first potential challenge to RCIC operation occurs due to the need to manually align gravity fill of the Emergency Condensate Storage Tank (ECST) within 9 hours. Due to extended boil-off time an additional hour is allowed to recover AC power prior to core damage. It is noted that the next most limiting challenge for continued RCIC operation does not occur until after 10 hours due to potential high exhaust back-pressure turbine trip.

Sequence T1SBO-4: /U2*RCI-EXT*X1*REC-LOSP-DG10H

Same as sequence T1SBO-3, except depressurization of the RPV fails resulting in failure of fire water injection (V5). The basis for AC recovery is the same as described for sequence T1SBO-3.

Sequence T1SBO-5: U2*/U1B*/HCI-EXT*/X1*V5*REC-LOSP-DG10H

Following a LOOP with failure of the emergency diesel generators, RCIC (U2) fails and HPCI (U1B) provides initial inventory make-up to the RPV. Manual operator actions to extend HPCI operation are considered successful at a 94% probability. Successful depressurization (X1) in support of fire water injection occurs, but fire water injection (V5) fails (assumed 1.0 failure probability in this analysis). Recovery of AC power within 10 hours is not successful for this sequence, resulting in core damage. Ten hours is allowed to recover AC power based on calculation NEDC 07-053, which documents a limiting division 2 (HPCI supply) battery capability for providing all required loads for 9 hours with manual action to shed one major DC load. Due to extended boil-off time an additional hour is allowed to recover AC power prior to core damage.

Sequence T1SBO-6: U2*/U1B*/HCI-EXT*X1*REC-LOSP-DG10H

Same as sequence T1SBO-5, except depressurization of the RPV fails resulting in failure of fire water injection (V5). The basis for AC recovery is the same as described for sequence T1SBO-5.

Sequence T1SBO-7: U2*/U1B*HCI-EXT*/X1*V5*REC-LOSP-DG6H

Following a LOOP with failure of the emergency diesel generators, RCIC (U2) fails and HPCI (U1B) provides initial inventory make-up to the RPV. Manual operator actions to extend HPCI operation are considered failed at a 6% probability. Successful depressurization (X1) in support of fire water injection occurs, but fire water injection (V5) fails (assumed 1.0 failure probability in this analysis). Recovery of AC power within 6 hours is not successful for this sequence, resulting in core damage. Six hours is allowed to recover AC power based on calculation NEDC 07-053, which documents a limiting division 2 (HPCI supply) battery capability for providing all required loads for 5 hours without manual action to shed any loads. Due to extended boil-off time an additional hour is allowed to recover AC power prior to core damage.

Sequence T1SBO-8: U2*/U1B*HCI-EXT*X1*REC-LOSP-DG6H

Same as sequence T1SBO-7, except depressurization of the RPV fails resulting in failure of fire water injection (V5). The basis for AC recovery is the same as described for sequence T1SBO-7.

Table A-1 summarizes the basis for timing insights associated with potential high pressure injection and battery depletion challenges during SBO type scenarios.

Table A-1

HPCI Challenge	Time (hrs)	Reference	Description
Exhaust Pressure	N/A	Calculation NEDC 92-50W	HPCI high exhaust back pressure set-point is set high enough to not cause a concern of tripping the turbine during an SBO. Nominal set-point is 136 psig.
Suction Temperature	8 hrs	MAAP run CN06058, NEDC 01-29A, B, C	HPCI is expected to be capable of operating at full load conditions with cooling water temperatures of 180°F for greater than 2 hours. This temperature is not reached until greater than 6 hours into the event, and HPCI would be expected to function for an additional 2 hours at a minimum.
PSP ED	14.5 hrs	MAAP run CN06058	The timing to the Pressure Suppression Curve in EOPs is estimated based on variation in suppression pool water levels seen in the analysis.
HCTL	11.4 hrs	MAAP run CN06058 and EOP HCTL curve	Timing based on ability to maintain RPV pressure below HCTL curve yet around 200 psi to allow continued HPCI operation. Based on 200 psig in the RPV the suppression pool temperature to exceed HCTL occurs at approximately 235°F.
High DW Temperature ED	17 hrs.	MAAP run CN06058	
Area Temperature	>12 hrs.	Calculation NEDC 07-065, PSA-ES72 and PSA-ES73.	Equipment reliability for HPCI and RCIC areas not impacted for a 12 hour SBO scenario.
ECST inventory	9.5 hrs.	PSA-ES66, NEDC 92-050K, and NEDC 98-001	Timing based on interpolated time for integrated decay heat make-up for 87,000 gallons consumed to prevent the low level suction swap. Note that HPCI would be anticipated to auto swap to torus and this challenge is not limiting for HPCI operation.

HPCI Challenge	Time (hrs)	Reference	Description
DC battery depletion without load shed	5.1 hrs	NEDC 07-053	
DC battery depletion with load shed	9.0 hrs	NEDC 07-053	Assumed action to isolate the Main Turbine Emergency Oil Pump within the first 2 hours results in extending the 250 V Division 2 battery time to 9.9 hours. The limiting time reported here is for 125 V Division 2 battery.
RCIC Challenge	**Time (hrs)**	**Reference**	**Description**
Exhaust Pressure	10.5 hrs	MAAP run CN06059A, Calculation NEDC 92-050AP	Based on nominal set-point and conservative accounting of head-loss.
Suction Temperature	11.5 hrs	MAAP run CN06059A	Not a limiting concern for RCIC due to no automatic suction swap from ECST on high suppression pool water level.
PSP ED	17.5 hrs	MAAP run CN06059A	The timing to the Pressure Suppression Curve in EOPs is estimated based on variation in suppression pool water levels seen in the analysis.
HCTL	14.1 hrs	MAAP run CN06059A and EOP HCTL curve	Timing based on ability to maintain RPV pressure below HCTL curve yet around 200 psi to allow continued HPCI operation. Based on 200 psig in the RPV the suppression pool temperature to exceed HCTL occurs at approximately 235°F.
High DW Temperature ED	20.5 hrs	MAAP run CN06059A	
Area Temperature	>12 hrs.	Calculation NEDC 07-065, PSA-ES72 and PSA-ES73.	Equipment reliability for HPCI and RCIC areas not impacted for a 12 hour SBO scenario.
ECST inventory	9.5 hrs.	PSA-ES66, NEDC 92-050K, and NEDC 98-001	Timing based on interpolated time for integrated decay heat make-up for 87,000 gallons consumed to prevent the low level suction swap. Note that HPCI would be anticipated to auto swap to torus and this challenge is not limiting for HPCI operation.
DC battery depletion without load shed	11.0 hrs	NEDC 07-053	

Figure A-1 CNS PRA Event Tree Modifications

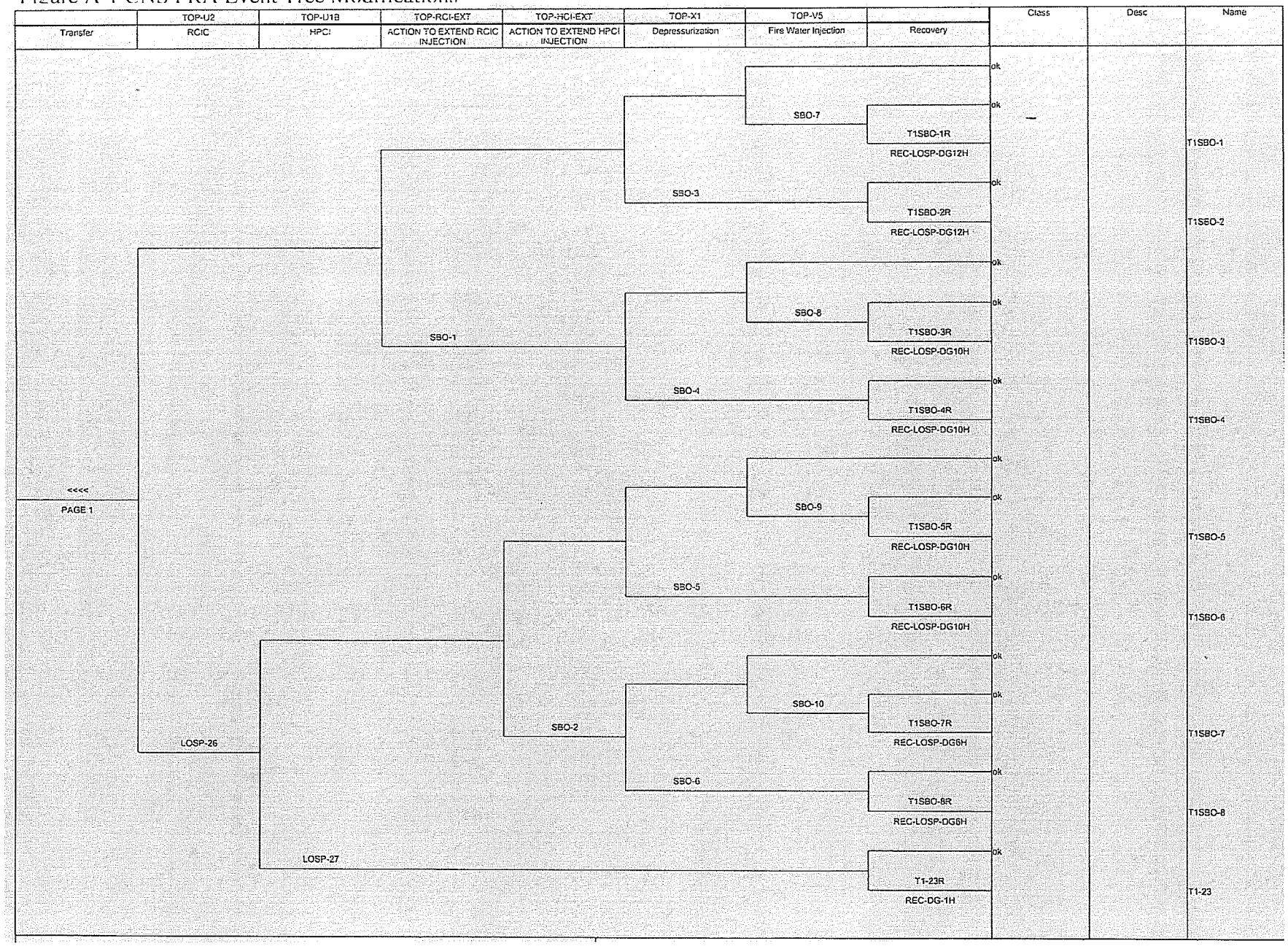

The SBO event tree in SPAR was also adjusted to reflect the need to better reflect battery depletion times and both the ability to extend HPCI and RCIC mission times. Figure A-2 represents the adjusted SPAR SBO tree. Specifically, a node was added to reflect the ability of specific actions to extend HPCI mission time and the AC power recoveries were adjusted to reflect the additional recovery time available when using the extended battery depletion times. The event tree does not reflect extended boil off times available to restore AC power prior to core damage.

Figure A-2 SPAR Model Event Tree Modifications

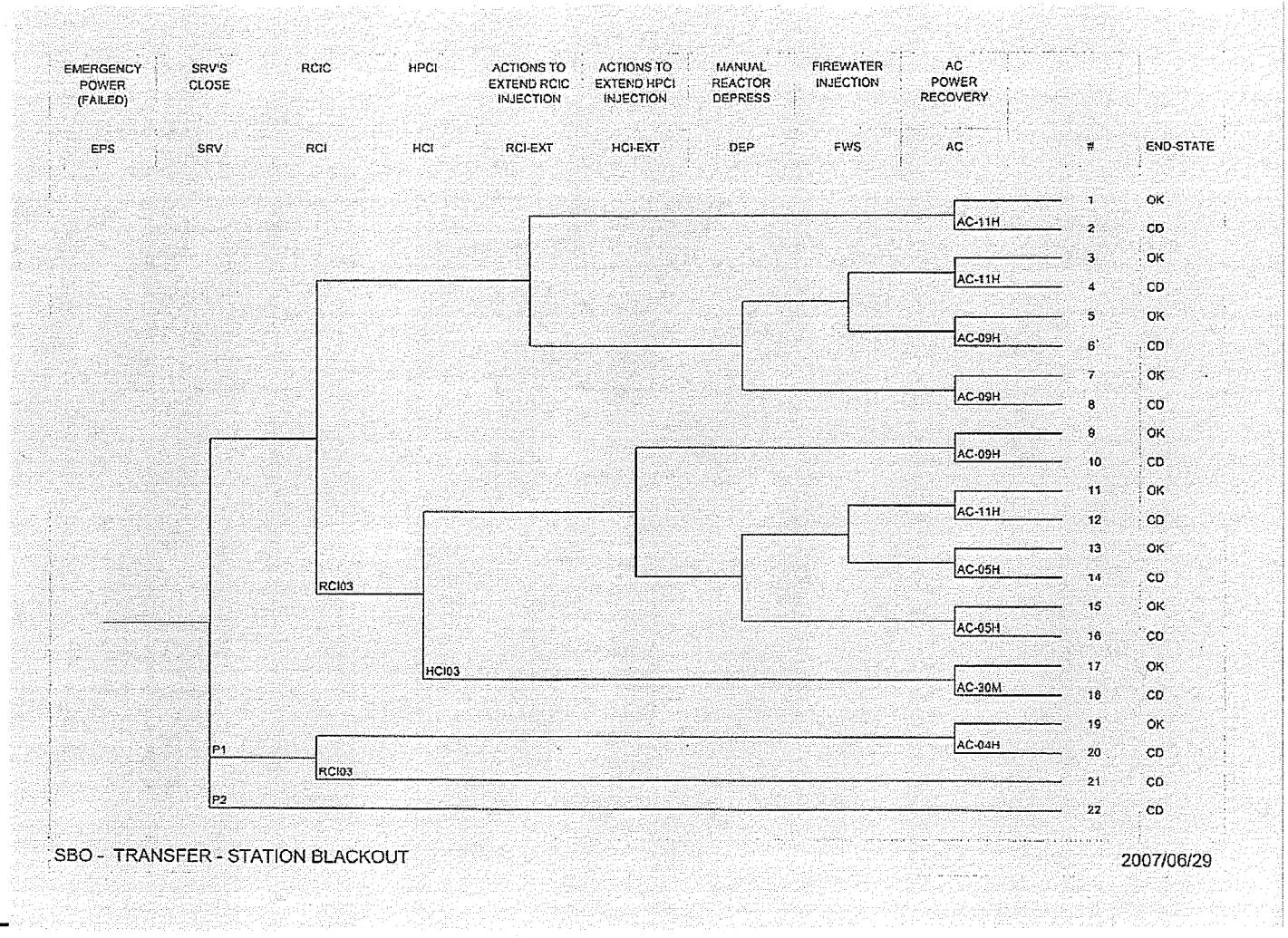

APPENDIX B

Human Reliability Analysis

Introduction

Division 2 DG failed a monthly Surveillance Test on January 18, 2007. The DG VAR loading rapidly spiked until the Diesel Generator Breaker tripped on Over-Voltage. The DG VAR loading spiked to approximately 10,667 KVAR prior to tripping the Diesel Generator. After trouble shooting the Diesel Generator, it was determined that a diode on the Voltage Regulator card had failed and caused the VAR excursion and subsequent Diesel Generator failure.

A risk evaluation of this condition was documented in CR-CNS-2007-00480 which credits recovery from the DG2 failure. This is also a key input to the significance determination of this failure, since recovery of the DG trip restores critical on-site AC power.

This paper provides the basis for recovery, identifying the activities that accomplish recovery and discusses factors affecting the successful outcome. An estimate of the probability of failure of the recovery is determined for the limiting core damage scenarios as defined in the plant PRA and SPAR models.

Conclusion

Recovery of DG2 is considered likely due to time available for diagnosis using existing Station Blackout procedures that place priority on restart of emergency AC power. The most limiting core damage event for failure of Diesel Generator 2 is a LOOP with the Diesel Generator 1 not available. In these sequences high pressure core cooling is initially successful. More than 8 hours is available to recover at least one AC electrical power source prior to core damage. With the station in a blackout condition, DG2 restart is directed by 5.3SBO which is applicable to greater than 95% of the core damage sequences. Given an extended coping period available for diagnosis and execution, the likelihood of successful recovery for DG2 is estimated to be at or below 3.2E-2, depending on the HRA model used.

Review of Expected Plant Response

The increase in risk due to emergency AC failure occurs in sequences where core and containment cooling was successful when relying solely on Division 2 DG during the 24 hour mission time of the PRA supplying all required loads. These sequences require a Loss of Offsite Power event concurrent with DG1 out of service for maintenance (or as result of system failures). After the scram, DG2 trips due to random (intermittent) diode failure. When the diode fails, the DG VAR (voltage) output rapidly increases until the DG trips on output breaker lockout (86 relay) on over voltage. The loss of DG2 emergency AC power occurs almost instantaneously following the diode failure. The DG2 would trip and lockout on over-voltage given the Voltage Control Mode Selector (VCMS) switch is positioned to Auto.

In response to a LOOP, the Control Room would be operating the plant using HPCI or RCIC to control level and pressure while depressurizing the reactor. An RHR pump, a Service Water Pump

and a Service Water Booster Pump would be in service to cool the suppression pool. These loads would be supplied by DG2. Since DG1 is not credited, once the Control Room validates that offsite power will not be available promptly (prior to DG2 failure), the RCIC loads will be transferred to the Division II batteries and supplied by Division II Diesel Generator (via 5.3AC480, Attachment 8). This action would extend the available battery depletion time to approximately 8 hours after DG2 diode failure.

A realistic battery depletion of 8 hours is modeled in the CNS PRA. The depletion times assume that both divisions of batteries are both at 90% capacity. Calculation NEDC 07-053 estimates how long the batteries would last using the Design Basis calculations NEDC 87-131A, B, C and D as inputs. The average loading assumed in these calculations is determined and divided by the actual battery capacity. The result of this calculation validates that both divisions of batteries would be capable of supplying all required loads for a minimum of approximately 8 hours. At the end of the scenario, the battery terminal voltage was compared with the minimum battery terminal voltage required to ensure adequate voltage to start the Diesel Generator was available. Based on this analysis, both RCIC and/or HPCI are available for a minimum of 8 hours.

Review of Other Issues Effecting Recovery

There are a number of issues that should be addressed as part of crediting restoration of the DG2 lockout. These issues and their resolution are listed below:

Diagnosis: In order to diagnose the DG2 voltage regulator failure, an operator (in the DG2 room) must confirm there are no obvious gross mechanical or electrical issues effecting DG operation. This is accomplished by procedure 2.2.20.1and supports the decision to restart. Since a LOOP event would have occurred, the plant would be in the Emergency Power procedure (5.3EMPWR). A station operator monitors diesel operation (Operations Procedure 2.2.20 and 2.2.20.1, the DG operating procedures) and during a LOOP would be expected to be nearby (not necessarily in the diesel room). Once the SBO is entered, the station operator returns to the diesel room and confirms overall integrity of the machine to support restart as needed.

Effects of DG2 Restart: The nature of the failure becomes apparent when initial restart fails due to over-voltage and same annunciation re-occurs (Procedure 2.3_C-4, Page 8, Tile C-4/A-5.) Given a failure attempt to restart from the Control Room per 2.2.20.1, the Operations crew would focus on local operation in Procedure 2.2.20.2, Section 9 (or 5) as directed by 5.3SBO. Procedure 2.2.20.2 provides guidance for placing DG control in ISOLATE which defeats the standing emergency start signal. The decision for local operation in manual voltage control would be driven by the high priority of AC power restoration given the SBO condition.

Staffing: At the initiation of the LOOP event, the plant would have been placed in a Notification of Unusual Event. Although a NOUE does not require initiating actions to bring the ERO on site, Operations Management would expect the SM to call in additional personnel, once the Control Room contacted the Doniphan Control Center and determined that offsite power would not be restored promptly. In the event that the SM did not initiate ERO pagers to activate facilities, the Operations Management team would require the SM to take these actions as follow-up to notification

of change in plant status. The needed staff, including management, maintenance, and engineering, would be called out and mobilized to respond to the plant event. After the SBO occurred due to the loss of DG2, a Site Area Emergency would be declared and the ERO would be activated, if not already staffed.

Lighting: When DG2 is running the plant would be in a LOOP with normal lighting powered from MCC-DG2. When DG2 failed, a station blackout would occur given DG1 is unavailable. Local inspections would be facilitated by emergency Appendix R lighting. A set of emergency lights are located in the DG2 room and they are directed in the general direction of the local control panels. The emergency lights are rated at 8 hours on battery. Lighting levels are adequate for general activities such as getting around in the room and gross inspection of the diesel. The lighting would be sufficient to support local control using the VC Mode Selector and Manual Voltage Regulator Adjust, each which are within arms reach on the front control panel in the DG2 room.

Execution: Loading of the DG during manual operation was reviewed for system response. The first loads the DG would supply are the 480 volt load center including the 460 volt MCC loads. This loading is expected to be approximately 500 to 750 kVA. Based on the rating of the DG compared to this load, the DG output voltage is not expected to change significantly. Following these loads, an RHR pump, a Service Water Booster Pump and a Service Water pump would be manually started from the Control Room. These loads would be started individually by the operator in the DG Room. The operator stationed in the DG room would monitor DG voltage after each large motor start and adjust the voltage back to approximately 4200 volts after the motors had started and a steady state voltage had been achieved. Conversations with the DG System Engineer and two MPR representatives indicated that with the DG in manual voltage control, the voltage drop between no load and full load would probably be around 5%. Since each of the large motors that would be started represents approximately ¼ of the total capacity of the generator, a voltage drop of 1.25% would be expected. Due to the uncertainties associated with operating a DG in this manner, a value of 5% voltage drop for each motor start will be conservatively utilized. Given the minimal loading and the significant margin between the original voltage of 4200 volts and the minimum required voltage, the Station Operator would be able to maintain the output voltage of the DG at above the minimum voltage requirements for the equipment at all times.

Recovery Time Line

A list of actions is described for the recovery of DG2, including consideration of the issues described above. These actions are shown in the following table, with estimates of the range of times required to perform each action (Time Estimate column). A narrative of the Operator response is given here to support the list in Table 1.

After the DG2 trip, the Control Room would enter procedure 5.3SBO which would direct the Operator located near DG2 to do a visual inspection of the Diesel Generator to ensure that fluid levels and other parameters are in specifications (5.3SBO Attachment 3, Step 1.2.3.2 ff). When the 86 lockout relay is reset in the Control Room, DG2 restart is expected due to the standing safety system actuation signal. Due to the failed diode in the voltage regulator card, the diesel generator will fail almost instantly upon starting. As a result of this trip, the same alarms and trip indications will re-occur.

Once DG2 trips the second time, the Control Room would have received the same annunciation and breaker flags on both trips (indicates a voltage control problem.) The Control Room would be directed

to place DG2 in ISOLATE (5.3SBO, Step 1.2.3.5) which defeats the emergency start signal. The Control Room directs use of Section 9, Procedure 2.2.20.2, Operation of Diesel Generators from Diesel Generator Rooms, by placing Control Mode Selector Switch to LOCAL. At Step 9.6.1 the Control Room would require the VC Mode Selector switch be positioned to Manual to start the DG and the Manual Voltage Regulator Adjust be set and maintained at approximately 4200 volts. It should be noted that this control will probably already be set to approximately 4200 volts. Once the DG was running and not tripping, the Operations Crew would load the DG per plant procedures (refer to 5.3SBO, Attachment 3, Step 1.2.3.6.)

Table 1 Recovery Activities and Duration

Activity	*Time Estimate (min)*	*Time Line (min)*
A. LOOP Response		**t=0**
1. Control room responds to LOOP, 5.3EMPWR verifies DG2 running	1-2	1-2
2. Station Operator dispatched to DG2 room	2-5	3-7
B. TSC Activation		
1. TSC Activation	60	60
C. Diagnosis		**at t=240**
1. Control room responds to SBO, verifies DG2 not running	1-2	1-2
2. Station Operator confirms DG2 breaker OV lockout after trip	2-5	3-7
3. Decision to Restart DG2, 5.3SBO, Step 1.2.3.4 per 2.2.20.1	1-2	4-9
4. Station Operator performs checklist, contact Control room	2-5	6-14
5. Station Operator observes DG2 start sequence and trip	1-1	7-15
6. Decision to Restart DG2, 5.3SBO, Att. 3, Step 1.2.3.5 using 2.2.20.2 (DG2 Isolated, change VC Mode to Manual and Man Volt Control)	45-105	51-120
D. Execution		
1. Station Operator restart DG2 in Manual	5-10	56-130

The time required to recover the DG is estimated at 120 minutes for diagnosis (steps C.1 through C.6) and 10 minutes for execution (step D.1) from the time the DG lockout occurs. (The minimum time estimated to perform the recovery is 56 minutes.) This is supported by the expected time to review the alarms and step through existing procedures to determine applicable steps. This restoration, operating the DG in manual, is a relatively simple task which is accomplished by the Operating crew member assigned to the DG unit.

These times are used in the next section, where the recovery failure probabilities are estimated in SPAR-H method. The minimum return to service time available is 10 hours, based on 8 hour RCIC operation plus 120 minute boil-off period. (Similar time for recovery exists for the HPCI success case, with actions to extend injection to 8 hours following DG2 failure.) This treatment is applicable to more than 95% of the sequences contributing to core damage. The remaining 5% of the sequences have considerably shorter time frame for recovery and are assumed not recovered. This assumption has negligible impact on expected change to core damage frequency.

Probability of Failure to Recover

The SPAR-H model was used to estimate the probability of failure to recover the DG as a function of the time required to perform the manual restart (the time from the timelines) and the time available to complete the actions in order to mitigate core damage (which comes from the accident sequence

analysis in the PSA). The recovery will be considered in two parts, Diagnosis and Execution, per the SPAR-H method.

The time available to make the restoration is the time the plant is able to cope with a SBO. The DC battery depletion time is 8 hours with either high pressure injection source with an additional 2 hours for core boil-off time. This evaluation assumes the 8 hour depletion time starts at the time of the SBO event. For this scenario no credit is given for possibility of using the swing charger on Division 1 batteries when DG2 is running. A bounding 10 hour recovery period is assumed to apply to both HPCI and RCIC depletion sequences.

The following performance shaping factors from the SPAR-H method are assumed for the diagnosis portion:

- Time Available = Long (9 hours), time needed ~120 minutes
- Stress = High, LOOP, then station blackout conditions
- Complexity = Nominal, indications are compelling, interpretation and action is clear
- Training = Nominal, address symptoms use TSC support to diagnose
- Procedures = Nominal, use alarms as defined and steps in procedures problem is self-revealing
- Ergonomics = Nominal, CR emergency lighting exists

The following performance shaping factors from the SPAR-H method are assumed for the execution portion:

- Time Available = Long (~10 min), with >60 min available
- Stress = High, focused on DG recovery, however action does not create conflict
- Complexity = Nominal, actions are simple and gradual
- Training = Low, however manual operation uses familiar controls at DG panel
- Procedures = Not complete, TSC to add steps to Section 9 for manual start and load
- Ergonomics = Nominal, emergency lighting in place

As seen on the following SPAR-H table, the estimate for the probability of failure to recover the DG is 3.2E-2. This is calculated using conservative estimates of repair activity times.

Discussion of SPAR-H Performance Shaping Factors

Diagnosis Factors:

Location: Information from the Control Room and the Diesel Generator Room would be utilized to diagnose this event.

Time Available: The minimum time available is considered long (>60 minutes) because total time to diagnose the DG is approximately 120 minutes and the execution is expected to take about 10 min.

Stress: The stress is considered high because the plant would be in an SBO. With the ERO staffed, the Operations Crew would have additional resources to help diagnose the problem and significant insight into the problem would be available.

Complexity: The Control Room would have at least two distinct annunciator and a breaker trip flag cues - indicate a voltage control problem as confirmed by alarm card listing. There is not conflicting information since both cues lead to the same conclusion, the complexity is considered Nominal.

Training: Operations is trained on how to operate the DG and a procedure is available for operation of the DG from the Diesel Generator Room which is considered adequate.

Procedures: Procedures 5.3EMPR, 5.3SBO, 2.2.20.1, and 2.2.20.2 provide guidance on what actions should occur during an SBO. The guidance in 2.2.20.2 (refer to Section 9) to start the DG in auto voltage control would establish the DG voltage trouble. The vendor manual states that DG operation in manual should be used if there are voltage control issues. By modifying Procedure 2.2.20.2, at Step 9.6.1 the Control Room would require the VC Mode Selector switch be positioned to Manual to start the DG and the Manual Voltage Regulator Adjust be set and maintained at approximately 4200 volts. Therefore, the procedures are considered nominal for diagnosis.

Ergonomics: The operator would be required to operate the DG from the Diesel Generator Room and the actions of starting the DG and adjusting DG voltage would occur at different times. The actions the operator would be required to perform are considered minimal and the position of the equipment is considered adequate. Therefore, the ergonomics of this recovery is considered nominal.

Execution Factors:

Location: The recovery of the DG would occur in the Diesel Generator Room.

Time Available: The time available is considered long because the actual starting of the DG in manual voltage control is estimated to take approximately 10 minutes and the available time is much greater than 5 times that amount.

Stress: Since the operator would have been in the DG room inspecting the DG and resetting breakers since the time the DG failed, the stress is considered high. Since the DG would start once procedure 2.2.20.2 was utilized, the stress would only decrease as the recovery continued.

Complexity: The start and operation of the DG in manual voltage control is provided by the Control Room using 2.2.20.2 with the exception that the operator does not perform the step to start the DG in automatic voltage control. The control room would provide guidance on manual operation to be followed prior to running in manual. Once the DG was running and not tripping, the Operations Crew would load the DG per plant procedures (refer to 5.3SBO, Attachment 3, Step 1.2.3.6.) With the DG in manual, the need for adjusting the voltage as loads are added is considered minimal. Overall the complexity is considered nominal.

Training: Procedure 2.2.20.2 does not provide explicit guidance on how to manually adjust voltage, therefore the training is considered low. Manual voltage control of the DG is not specifically trained on, however, the required voltage band is large and the control of the DG voltage is simple. Overall, training is considered low for this recovery.

Ergonomics: The ergonomics for this recovery is considered adequate. The controls for the DG are readily available and are the same controls used in other DG evolutions. Once the DG is started, the only operator input required is occasionally verifying the output voltage and making minor adjustments as needed. Overall, the ergonomics is considered nominal for this recovery.

				Performance Shaping Factors (PSFs)*												
Critical Task	(D/E) **	Basic HEP	Loc***	Time Available[1] (VL/L/N/S/VS)		Stress (N/H/E)		Complexity (OD/N/MC/HC)		Training[3] (H/N/L)		Procedures[2] DS/N/AP/NC		Ergonomics (G/N/P/MM)		Mean HEP
				Type	x	Level	x	Level	x	Level	x	Level	x	Level	x	
Diagnosis	D	1.0E-2	C/L	L	0.10	H	2	N	1	L	10	N	1	N	1	2.0E-2
Execution	E	1.0E-3	L/C	L	0.10	H	2	N	1	L	3	NC	20	N	1	1.2E-2
										Manual Operation				**Total HEP**		**3.2E-2**

* Performance Shaping Factors (PSFs)

Time Available:	550 minutes (10 hours:600 min - 50 min execution (5x 10 min proc step))	
- VL (Very Long)	Diagnosis:>24 hours	Execution: Time available ≥50x time required
- L (Long)	Diagnosis:>60 minutes	Execution: Time available ≥5x time required
- N (Nominal)	Diagnosis:20<x<60 minutes	Execution: Nominal time
- S (Short)	Diagnosis:<20 minutes	Execution: Time available is about equal to the time required
- VS (VeryShort)	Diagnosis:Inadequate time	Execution: Inadequate time
Stress:	N = Nominal; H = High; E = Extreme	
Complexity:	OD = Obvious diagnosis (diagnosis only); N = Nominal; MC = Moderately complex; HC = Highly complex	
Training	H = High; N = Nominal; L = Low	
Procedures	DS = Diagnostic/symptom oriented (diagnosis only); N = Nominal; AP = Available, but poor; NC = Not complete	
Ergonomics	G = Good; N = Nominal; P = Poor; MM = Missing or misleading	

** Error Type: Diagnosis (D), Execution (E)

*** Location of Action: Main Control Room (C) or Local at DG(L)

Numerical Footnotes:

(1)- Time available for EDG recovery is 8 hours (HPCI 9 hour success case is limiting.) Including RPV boil-off period gives more than 10 hours to complete EDG 2 recovery. Performing execution steps estimated at 10 minutes, with at least 60 minutes available. Diagnosis with TSC support following initial staffing within 120 minutes following LOOP. The time remaining for diagnosis following EDG 2 failure (3 hours after TSC is staffed) is estimated to be 6 hours. Time available = L for both diagnosis and execution.

(2)- TSC is manned, technical support help diagnose using alarms and annunciator card, troubleshooting guide in the Vendor Manual recommends running in Manual (Diagnosis Procedures = N). Use of existing 2.2.20.2, Section 9, add steps which place voltage control in Manual for start and load, add steps for DG operator make minor adjustments (Execution Procedures = NC, with procedures modified and in place prior to recovery).

(3)- Training for manual operation considered nominal based on operating history and expected response. The DG operator will check and/or adjust the DG voltage as necessary within a few minutes after large motors are added and as an hourly task. This task would be identical to the task the operator perform to add load to the DG for the Monthly Surveillance tests with the only exception being that they would be monitoring voltage and total load rather than just total load. Therefore, the operators receive training on this type of activity twice a month.

Discussion of EPRI HRA Calculator Analysis

EPS-XHE-FO-DG2, Operator fails to recover DG2 after VC board failure

Table 1: Basic Event Summary

Analyst:	John Branch
Rev. Date:	07/09/07
Cognitive Method:	CBDTM/THERP
Analysis Database:	7-2-07 DG2 SDP.HRA (07/09/07, 475136 Bytes)

Table 2: EPS-XHE-FO-DG2 SUMMARY

Analysis Results:	without Recovery	with Recovery
P_{cog}	3.7e-02	9.4e-04
P_{exe}	2.0e-01	1.0e-02
Total HEP		1.1e-02
Error Factor		5

Related Human Interactions:

Cue:

The increase in risk due to emergency AC failure occurs in sequences where core and containment cooling was successful when relying solely on Division 2 DG during the 24 hour mission time of the PRA supplying all required loads. These sequences require a Loss of Offsite Power event concurrent with DG1 out of service for maintenance (or as result of system failures). The DG2 continues to run for 4 hours prior to the diode failure causing the DG to trip. When the diode fails, the DG VAR (voltage) output rapidly increases until the DG trips on output breaker lockout (86 relay) on over voltage. The loss of DG2 emergency AC power occurs almost instantaneously following the diode failure. The DG2 would trip and lockout on over-voltage given the Voltage Control Mode Selector (VCMS) switch is positioned to Auto.

In response to a LOOP, the Control Room would be operating the plant using HPCI or RCIC to control level and pressure while depressurizing the reactor. An RHR pump, a Service Water Pump and a Service Water Booster Pump would be in service to cool the suppression pool. These loads would be supplied by DG2. Since DG1 is not credited, once the Control Room validates that offsite power will not be available promptly (prior to DG2 failure), the RCIC loads will be transferred to the Division II batteries and supplied by Division II Diesel Generator (via 5.3AC480, Attachment 8). This action would extend the available battery depletion time to approximately 8 hours after DG2 diode failure.

The cue is the trip of the DG2 and entry into SBO conditions. It would be indicated by numerous alarms and indications and clearly identifiable.

Degree of Clarity of Cues & Indications:

Very Good

Procedures:

Cognitive: 5.3SBO (STATION BLACKOUT) Revision: 14
Execution: 2.2.20.2 (OPERATION OF DIESEL GENERATORS FROM DIESEL GENERATOR ROOMS) Revision: 36
Other: () Revision:

Cognitive Procedure:

Step: 1.2.3.1
Instruction: LOCALLY CONFIRM DG INTEGRITY

Procedure and step governing HI:

Plant Response:

DG2 automatically starts and loads Essential Bus 4160 Volt 1G.
Main Control Room (MCR) declares a NOUE and enters 5.3EMPR,

Attachment 2, Step 1.8.3

"If normal power cannot be restored or is subsequently lost, ensure TSC activated and have TSC activate Attachment 5 (Page 18) to restore power to PPGB1."

Attachment 3, Step 1.2.3

"If only one DG is providing power, perform following:

Monitor DG load in accordance with Step 1.1.2 and Attachment 4 (Page 11)."

DG2 Voltage Regulator Card Fails causing DG2 Failure

Plant Response:

MCR declares a Site Area Emergency and activates the ERO if the ERO has not already been activated due to the extended LOOP.

MCR enters 5.3SBO Step 1.2.3, Attachment 3

1.2.3 "If a DG is not running, perform following:

1.2.3.1 Check local control boards, valve lineups, and control power fuses if degraded conditions such as shorts, fires, or mechanical damage are not evident.

1.2.3.2 Reset any trip condition.

a At VBD-C, check white light above DIESEL GEN 1(2) INCOMPLETE SEQ RESET button light is off. If on, press RESET button to reset trip.

b Locally in DG Room, check ENGINE OVERSPEED alarm is not in alarm. If alarmed, reset per alarm procedure.

c Locally in DG Room, on DIESEL GENERATOR #1(2) RELAYING panel check white light above DG1(2) LOCKOUT relay is on. If off, check relays to determine cause and reset.

1.2.3.3 If starting air pressure is low, start diesel air compressor per Procedure 2.2.20.1.

1.2.3.4 Start and load DG per Procedure 2.2.20.1."

MCR and DG Operators would enter Procedure 2.2.20.1, Section 7. Section 7 contains several steps designed for maintaining the availability of the DG during surveillance runs, however, the steps of interest are:

Plant Enters 2.2.20.1 "DIESEL GENERATOR OPERATIONS"

7.13 Place and hold DIESEL GEN 2 STOP/START switch to START until STOP light turns off.

7.14 Using DIESEL GEN 2 VOLTAGE REGULATOR, adjust voltage to ~ 4200V.
This step does not state specifically the voltage regulator would be in "Automatic" at this time, however, since this is a Restart from the Main Control Room, the only option for restarting the Diesel Generator from the Control Room is in Automatic. Due to this fact, the DG would trip and cause an over-voltage lock-out, an over-voltage annunciation exactly the same as the first trip.

Plant Continues in Procedure 5.3SBO

Attachment 3, Step 1.2.3.5 provides the following guidance:

"If DG(s) cannot be started and loaded, start and load DG(s) with ISOLATION SWITCHES in ISOLATE per Procedure 2.2.20.2".

Procedure 2.2.20.2 has 3 Sections that are applicable to DG2.

Sections 5, "DG2 STARTUP AND SHUTDOWN AFTER MAJOR MAINTENANCE",
Section 7, "DG2 STANDBY STARTUP AND SHUTDOWN FROM DG2 ROOM

Section 9, "DG2 OPERATION WHEN REQUIRED BY PROCEDURE 5.3SBO OR 5.4POST-FIRE"

The obvious section that would be applicable for this condition would be Section 9 since it references 5.3SBO, however, upon reviewing this section, the steps are virtually identical to the steps in 2.2.20.1 except that the DG is physically started in the DG room. The Voltage Control remains in Automatic and thus the DG would trip as soon as the DG started resulting in the same annunciation, alarms and flags. Reviewing the procedure further reveals that Section 5 provides the appropriate guidance for starting the DG in manual voltage control. Since Operations use this section of the procedure each outage if any major maintenance is performed on the DG, it is reasonable to assume that this section of the procedure would be utilized under these conditions with these combined expertise of the TSC and the on-shift operating crew and potentially the entirely ERO staffed. Following either section 5 or section 9 would accomplish the same actions, and both would lead to a successful start of the DG.

Plant Enters 2.2.20.2 "OPERATION OF DIESEL GENERATORS FROM DIESEL GENERATOR ROOMS"

1. Section 5 "DG2 STARTUP AND SHUTDOWN AFTER MAJOR MAINTENANCE"
5.8 Place VOLTAGE CONTROL MODE SELECTOR switch to MANUAL.
5.16 Press and hold START button until blue AVAILABLE light turns off.
5.20 Using MANUAL VOLTAGE CONTROL ADJUST knob, adjust GENERATOR VOLTAGE to ~ 4200V.
5.23 Place VOLTAGE CONTROL MODE SELECTOR switch to AUTO.

At this time the DG would trip and cause an over-voltage lock-out, an over-voltage annunciation exactly the same as the previous trips. Since the trip would occur immediately after the switch was placed in automatic, the cause of the failure would be self revealing. Once the cause the DG trip was determined, the procedures would easily be revised to eliminate the step that puts the DG in automatic voltage control and adds a step that has the DG operator check and/or adjust the DG voltage as necessary within a few minutes after large motors are added and as a periodic task. This task would be identical to the task the operator perform to add load to the DG for the Monthly Surveillance tests with the only exception being that they would be monitoring voltage and total load rather than just total load. Therefore, the operators receive training on this type of activity twice a month. Operation of the DG in manual voltage control is also discussed in the Vendor Manual.

Training:

Classroom, Frequency: Initial
OJT, Frequency: Initial
Routine Operation: The operators perform a manual start from the DG room per procedure 2.2.20.2, section 5, at least once per outage.

JPM Procedure:

() Revision:

HFE Scenario Description:
Division 2 DG failed a monthly Surveillance Test on January 18, 2007. The DG VAR loading rapidly spiked until the Diesel Generator Breaker tripped on Over-Voltage. The DG VAR loading spiked to approximately 10,667 KVAR prior to tripping the Diesel Generator. After trouble shooting the Diesel Generator, it was determined that a diode on the Voltage Regulator card had failed and caused the VAR excursion and subsequent Diesel Generator failure.

A risk evaluation of this condition was documented in CR-CNS-2007-00480 which credits recovery from the DG2 failure. This is also a key input to the significance determination of this failure, since recovery of the DG trip restores critical on-site AC power.

This HRA estimates the probability of failure of the recovery.

Execution Performance Shaping Factors:

Environment:	Lighting	Emergency
	Heat/Humidity	Hot / Humid
	Radiation	Background
	Atmosphere	Normal
Special Requirements:		
Complexity of Response:	Cognitive	Complex
	Execution	Complex
Equipment Accessibility:	CONTROL ROOM	Accessible
	DIESEL GENERATOR ROOM	Accessible
Stress:	**High**	
	Plant Response As Expected:	No
	Workload:	N/A
	Performance Shaping Factors:	N/A

Performance Shaping Factor Notes:

Cognitive Unrecovered

EPS-XHE-FO-DG2

Timing:

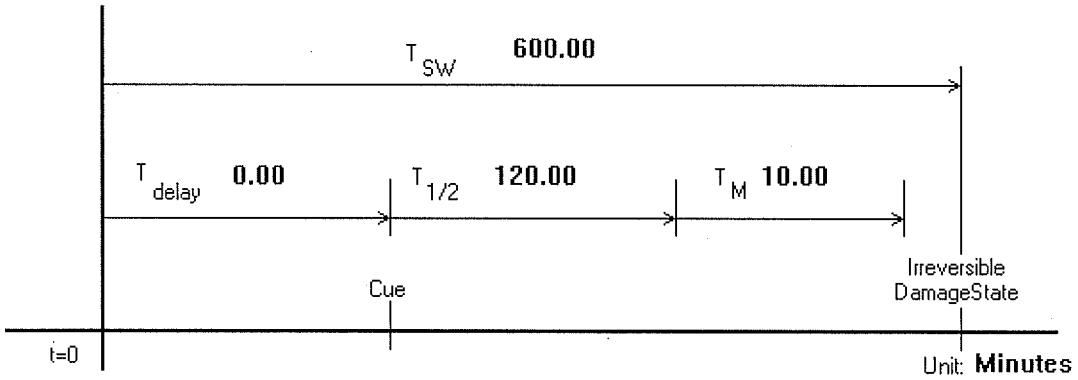

Timing Analysis: The time required to recover the DG is estimated at 120 minutes for diagnosis (steps C.1 through C.6) and 10 minutes for execution (step D.1) from the time the DG lockout occurs. (The minimum time estimated to perform the recovery is 56 minutes.) This is supported by the expected time to review the alarms and step through existing procedures to determine applicable steps. This restoration, operating the DG in manual, is a relatively simple task which is accomplished by the Operating crew member assigned to the DG unit.

The time available to make the restoration is the time the plant is able to cope with a SBO. The DC battery depletion time is 8 hours with either high pressure injection source with an additional 2 hours for core boil-off time. This evaluation assumes the 8 hour depletion time starts at the time of the SBO event. For this scenario no credit is given for possibility of using the swing charger on Division 1 batteries when DG2 is running. A bounding 10 hour recovery period is assumed to apply to both HPCI and RCIC depletion sequences.

Time available for recovery: 470.00 Minutes

SPAR-H Available time (cognitive): 590.00 Minutes

SPAR-H Available time (execution) ratio: 48.00

Minimum level of dependence for recovery: ZD

Table 3: EPS-XHE-FO-DG2 COGNITIVE UNRECOVERED

Pc Failure Mechanism	Branch	HEP
Pc_a: Availability of Information	a	neg.
Pc_b: Failure of Attention	h	neg.
Pc_c: Misread/miscommunicate data	a	neg.
Pc_d: Information misleading	a	neg.
Pc_e: Skip a step in procedure	g	6.0e-03
Pc_f: Misinterpret instruction	c	3.0e-02
Pc_g: Misinterpret decision logic	j	1.0e-03
Pc_h: Deliberate violation	a	neg.
Sum of Pc_a through Pc_h = Initial Pc =		3.7e-02

pca: Availability of information

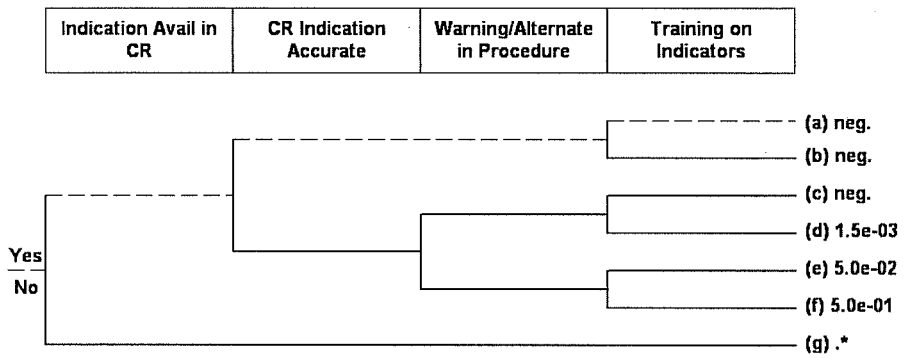

Most necessary indications are available in the main control room.

Lockout relay and diesel integrity information is necessary for the cognitive task and is readily available from the diesel generator room.

pcb: Failure of attention

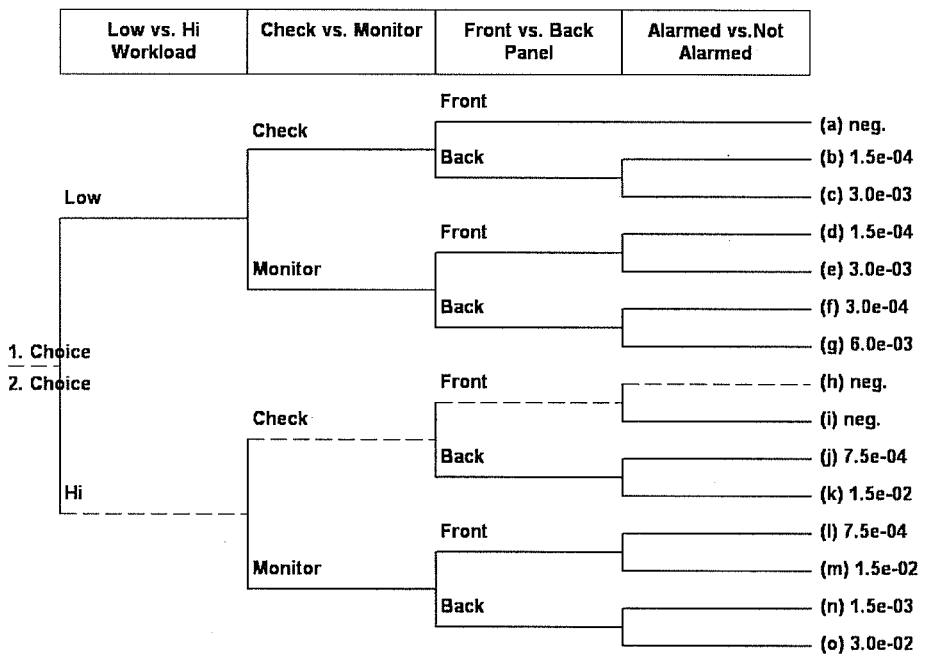

Per procedure during a SBO, recovery of the EDGs is the operators' primary concern and focus. Most of the necessary information is available on a front control panel or the DG local panel.

pcc: Misread/miscommunicate data

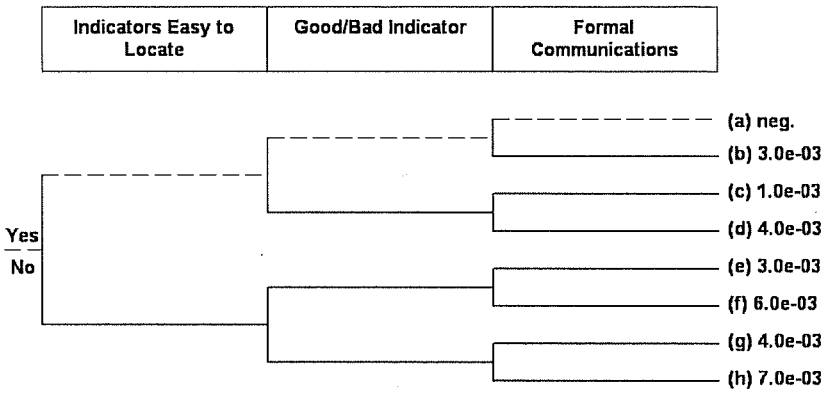

While diesel noise could hinder communication while the diesel is running, it will not be running during the cognitive phase and communication from the DG room to the CR should be normal.

pcd: Information misleading

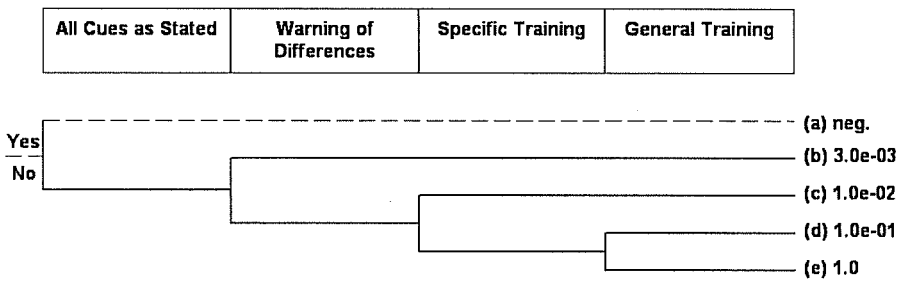

pce: Skip a step in procedure

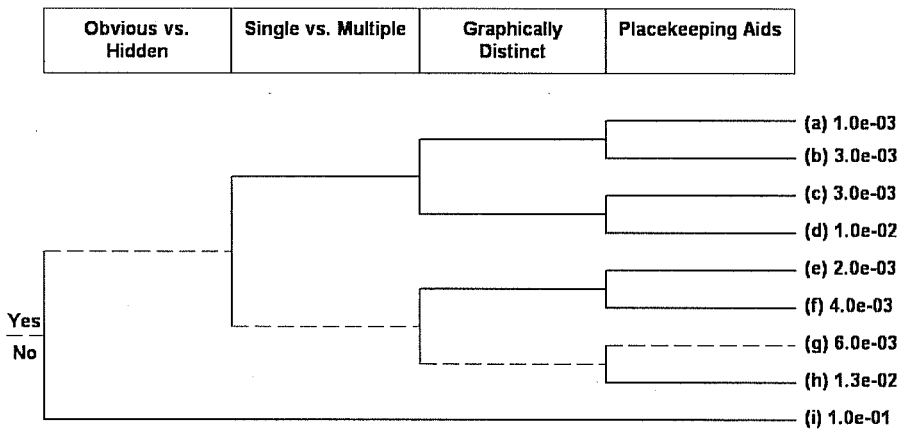

pcf: Misinterpret instruction

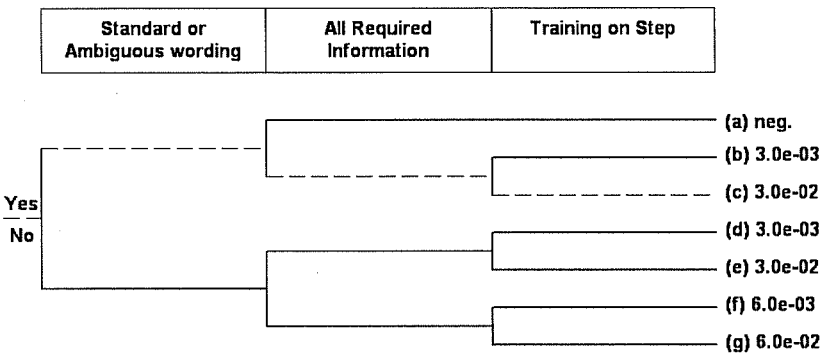

pcg: Misinterpret decision logic

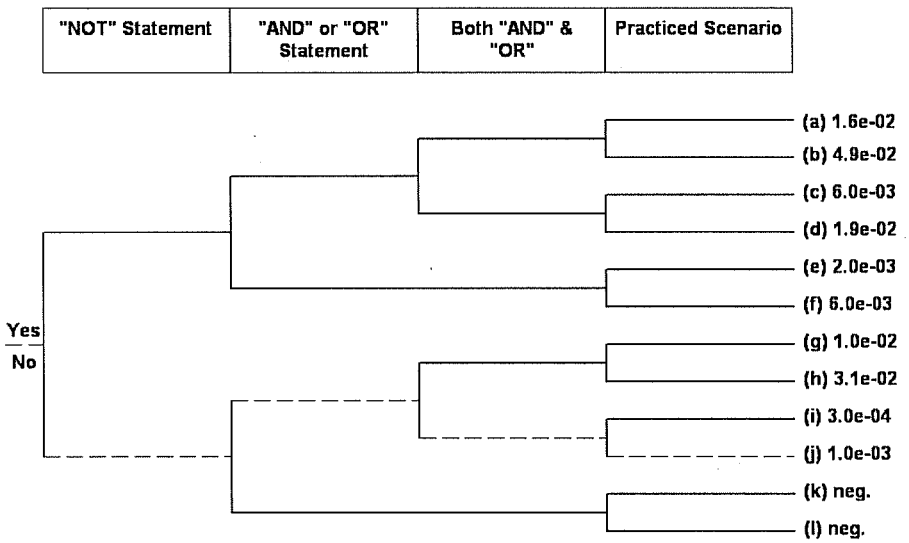

pch: Deliberate violation

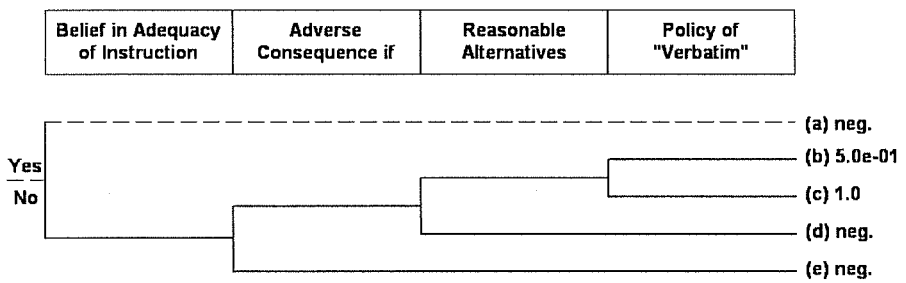

Cognitive Recovery

EPS-XHE-FO-DG2

Table 4: EPS-XHE-FO-DG2 COGNITIVE RECOVERY

	Initial HEP	Self-Review	Extra Crew	STA Review	Shift Change	ERF Review	Recovery Matrix	DF	Multiply HEP By	Override Value	Final Value
Pc_a:	neg.	-	-	-	-	-	NC	-	1.0		
Pc_b:	neg.	-	-	-	-	-	NC	-	1.0		
Pc_c:	neg.	-	-	-	-	-	NC	-	1.0		
Pc_d:	neg.	-	-	-	-	-	NC	-	1.0		
Pc_e:	6.0e-03	-	-	-	-	X	1.0e-01	ZD	6.0e-03		3.6e-05
Pc_f:	3.0e-02	-	-	-	-	X	1.0e-01	ZD	3.0e-02		9.0e-04
Pc_g:	1.0e-03	-	-	-	-	X	1.0e-01	ZD	1.0e-03		1.0e-06
Pc_h:	neg.	-	-	-	-	-	NC	-	1.0		
									Sum of Pc_a through Pc_h = Initial Pc =		9.4e-04

Notes:
The ERO will be fully staffed during the majority of the time available to perform this action.

Execution Unrecovered

EPS-XHE-FO-DG2

Table 5: EPS-XHE-FO-DG2 EXECUTION UNRECOVERED

Procedure: 2.2.20.2, OPERATION OF DIESEL GENERATORS FROM DIESEL GENERATOR ROOMS		Comment				Stress Factor	Over Ride
Step No.	Instruction/Comment	Error Type	THERP Table	THERP Item	HEP		
1.2.3.5	PLACE ISOLATION SWITCHES IN ISOLATE	This is one step in the EOP that governs the switching of 4 switches. Failure to place the switches in isolate could prevent the output breaker from being opened from the DG room. The condition is easily detectable and corrected by a fully staffed operations crew and EOF.				5	
	--	EOM	20-7b	2	1.3E-3		
						Total Step HEP	1.2e-02
5.8	PLACE CONTROL MODE SELECTOR SWITCH TO MANUAL	Procedure 2.2.20.2, section 5, provides the appropriate guidance for starting the DG in manual voltage control. Since Operations use this section of the procedure each outage if any major maintenance is performed on the DG, it is reasonable to assume that this section of the procedure would be utilized under these conditions with the combined expertise of the TSC and the on-shift operating crew and potentially the entire ERO staffed. Failure to place this switch in MANUAL may result in DG2 tripping due to the voltage regulator card defect. a fully staffed operations crew and ERO will detect this and direct that the switch be turned to MANUAL and the diesel operated in manual voltage control.				5	
	--	EOM	20-7b	2	1.3E-3		
						Total Step HEP	7.9e-03
5.9	PLACE MANUAL VOLTAGE CONTROL ADJUST KNOB TO MINIMUM	Omission or incorrect performance of this step would not damage the diesel or prevent it from starting. If the voltage were adjusted too high, it might cause an over-voltage trip after start. In this case, a fully staffed operations crew and ERO would be available to diagnose the problem and correct the action. If it were adjusted too low, it might cause under voltage trip which would shed loads and leave the DG running. In that case, the voltage could be adjusted higher and the loads re-established. The control is normally left at 4200 volts.				5	
	--	EOM	20-7b	2	1.3E-3		
						Total Step HEP	1.3e-02
5.11	PLACE CONTROL MODE SELECTOR SWITCH TO LOCAL	Failure to perform this step or performing it incorrectly will result in not having local control of the DG output breakers. This failure is easily detected because the				5	

		operations crew and the ERF are fully staffed and their primary attention is directed at recovering the DG. This failure is easily corrected when the error is detected by simply placing the switch in LOCAL.					
	--	EOM	20-7b	2	1.3E-3		
						Total Step HEP	7.9e-03
5.16	PRESS AND HOLD START BUTTON UNTIL AVAILABLE LIGHT TURNS OFF	Failure to perform this step or failure to hold the button long enough would only result in the DG not starting. It would not prevent it from being restarted.				5	
	--	EOM	20-7b	2	1.3E-3		
						Total Step HEP	2.6e-02
5.20	ADJUST GENERATOR VOLTAGE TO 4200 VOLTS					5	
	--	EOM	20-7b	2	1.3E-3		
						Total Step HEP	6.5e-03
5.21	CLOSE DG2 OUTPUT BREAKER	This step is not in the procedure; however, it is a logical knowledge based step that is well know and understood by the operations crew and the respective experts in the ERO, which will be fully staffed.				5	
	--	EOM	99	1	1.0E-2		
						Total Step HEP	5.0e-02
5.22	ADJUST FREQUENCY TO 60 HZ					5	
	--	EOM	20-7b	2	1.3E-3		
						Total Step HEP	6.5e-03
5.23	CONTROL VOLTAGE WHILE ADDING LOADS	This step is not proceduralized; however, energizing equipment is the focus of this entire action. The operator will be able to manually control voltage while adding loads. If the operator loses voltage control, the DG or DG output breaker will trip and the process can be repeated. There is adequate time to perform the DG start several times until manual voltage control is successful.				5	
	--	EOM	99	1	1.0E-2		
						Total Step HEP	7.6e-02
5.8R	DETECT AND CORRECT SWITCH POSITION	The incorrect positioning of this switch will be detected when the diesel control does not respond as expected. The only way the switch can be improperly operated is to not be turned at all. This does not damage anything and can be corrected simply by turning the switch. A fully staffed operations crew and ERO are available to assist in diagnosing this error, and ample time is available to do so.				5	
						Total Step HEP	0.0e+00
5.16R	DETECT INCORRECT START	An incorrect start would be easily identifiable, especially with assistance from the CR. Ample staff is available in the ERF to diagnose an incorrect performance of this step.				5	
						Total Step HEP	0.0e+00
5.20R	DETECT INCORRECT VOLTAGE	An incorrect voltage would be easily identifiable, especially with assistance from the CR. Ample staff is available in the ERF to diagnose an incorrect performance of this step.				5	
						Total Step HEP	0.0e+00

5.21R	DETECT INCORRECT BREAKER POSITION	Failure of the breaker to close will be obvious when the bus is not energized. This error will be easily identified and corrected by a fully staffed operations crew and ERO.				5	
						Total Step HEP	0.0e+00
5.23R	RE-ESTABLISH MANUAL VOLTAGE CONTROL	A fully staffed operations crew and ERO are available to assist the operator in this step.				5	
						Total Step HEP	0.0e+00
5.22R	DETECT INCORRECT FREQUENCY					5	
						Total Step HEP	0.0e+00

Execution Recovery

EPS-XHE-FO-DG2

Table 6: EPS-XHE-FO-DG2 EXECUTION RECOVERY

Critical Step No.	Recovery Step No.	Action	HEP (Crit)	HEP (Rec)	Dep.	Cond. HEP (Rec)	Total for Step
1.2.3.5		**PLACE ISOLATION SWITCHES IN ISOLATE**	**1.2e-02**				**6.0e-04**
	5.8R	DETECT AND CORRECT SWITCH POSITION		0.0e+00	LD	5.0e-02	
5.8		**PLACE CONTROL MODE SELECTOR SWITCH TO MANUAL**	**7.9e-03**				**4.0e-04**
	5.8R	DETECT AND CORRECT SWITCH POSITION		0.0e+00	LD	5.0e-02	
5.9		**PLACE MANUAL VOLTAGE CONTROL ADJUST KNOB TO MINIMUM**	**1.3e-02**				**6.5e-04**
	5.8R	DETECT AND CORRECT SWITCH POSITION		0.0e+00	LD	5.0e-02	
5.11		**PLACE CONTROL MODE SELECTOR SWITCH TO LOCAL**	**7.9e-03**				**4.0e-04**
	5.8R	DETECT AND CORRECT SWITCH POSITION		0.0e+00	LD	5.0e-02	
5.16		**PRESS AND HOLD START BUTTON UNTIL AVAILABLE LIGHT TURNS OFF**	**2.6e-02**				**1.3e-03**
	5.16R	DETECT INCORRECT START		0.0e+00	LD	5.0e-02	
5.20		**ADJUST GENERATOR VOLTAGE TO 4200 VOLTS**	**6.5e-03**				**3.3e-04**
	5.20R	DETECT INCORRECT VOLTAGE		0.0e+00	LD	5.0e-02	
5.21		**CLOSE DG2 OUTPUT BREAKER**	**5.0e-02**				**2.5e-03**
	5.21R	DETECT INCORRECT BREAKER POSITION		0.0e+00	LD	5.0e-02	
5.22		**ADJUST FREQUENCY TO 60 HZ**	**6.5e-03**				**3.3e-04**
	5.22R	DETECT INCORRECT FREQUENCY		0.0e+00	LD	5.0e-02	
5.23		**CONTROL VOLTAGE WHILE ADDING LOADS**	**7.6e-02**				**3.8e-03**
	5.23R	RE-ESTABLISH MANUAL VOLTAGE CONTROL		0.0e+00	LD	5.0e-02	
		Total Unrecovered:	**2.0e-01**			**Total Recovered:**	**1.0e-02**

APPENDIX C

Data analysis

The following section describes the process and results of the data analysis performed to determine the failure probability of the defective diode in the DG-GEN-DG2 voltage regulator card.

In Service Performance for the Defective Diode

The diodes in service life included 36 hours of run time and one failure of function.

The defective diode was installed in as part of the voltage regulator control card on November 8, 2006. The card was in service for 36 hours following installation as the diesel generator was ran for post maintenance testing and surveillance testing up until its failure and removal on January 18, 2007.

Evaluation of performance leading to the over voltage trip of DG-GEN-DG2 on January 18, 2007 and subsequent root cause lab testing found that there were two other instances that could be attributed to the open circuit failure condition of the defective diode. However both of these instances were dismissed as follows:

> During post maintenance testing of DG-GEN-DG2 on November 11, 2006, an over voltage condition was noted while tuning the control circuit that contained the defective diode. Because this testing did not provide conclusive evidence that the diode was the cause of the over voltage condition and based on the fact that DG-GEN-DG2 demonstrated over 24 hours of successful run time after occurrence of the November 11, 2006 condition, this instance is dismissed as a attributable failure of the defective diode.
>
> A post failure test of the circuit card that included the defective diode resulted in both satisfactory card operation followed by unsatisfactory card operation with subsequent determination that the defective diode was in a permanent open circuit state. Though this lab testing could have been interpreted as an additional failure of the diode, it has been dismissed due to the large amounts of variability introduced by shipping of the card to the lab, the differences between lab bench top testing and actual installed conditions, and errors that could be attributed to test techniques and human errors.

Priors

A bounding approach was taken in the application of diesel generator failure to run data used to assess the change in risk resulting form the January 18, 2007 over voltage trip. This bounding approach includes use of a higher diesel generator fail to run failure rate modeled in the CNS SPAR model. The SPAR model diesel generator fail to run probability is 2.07E-02 for a 24 hour mission time. The mean failure rate can be derived by solving the following poison derivation for the diesel generator failure probability of 2.07E-02:

$2.07E\text{-}02 = 1 - Exp(-\lambda * 24)$ or $\lambda = 8.715E\text{-}04/Hr$

This failure rate will be used as a noninformative prior to derive the failure rate of the defective diode.

Bayesian Estimation

Guidance provided in NUREG CR6823 (Reference 4) was used to determine that a Constrained Noninformative Prior Bayesian Estimation was the best method to utilize in the derivation of the defective diode failure rate. Section 6.5.1 of NUREG CR6823 discusses failure to run during mission events and directs the use of Bayesian estimates using section 6.2. Section 6.2.2.5.3 recommends use of the constrained noninformative prior as a compromise to a Jeffries prior when prior belief is available but the dispersion is defined to correspond to little information. Because the SPAR fail to run data provides prior belief with unknown information on possible industry failures resulting form the diode defect a constrained noninformative prior was applied.

This estimation assumes an α of 0.5 and derives β as follows using the 8.715E-04 mean failure rate from the SPAR data:

$\lambda_{prior} = \alpha/\beta$ Where $\alpha=0.5$, $\lambda_{prior}=8.715E\text{-}04/Hr$
$\beta = 573$

Applying the in service performance for the defective diode the following table can be generated to detail the diodes failure probability. λ_{post} is derived using the Constrained Noninformative Prior with an $\alpha=0.5$ and $\beta = 573$.

Number of Diode Failures (N)	Diode In Service Time (Hours)	λ_{post}, $(\alpha+N)/\beta+36)$	Diesel Generator Mission Time	Diode Failure Probability (1-Exp(-λ_{post} *24)
N=1	36	2.46E-03	24 Hours	5.7E-02
N=2	36	4.11E-03	24 Hours	9.39E-02
N=3	36	5.75E-03	24 Hours	1.29E-01

Note the above table includes 1, 2 and 3 failures to support bounding analysis done in section 2.2. The overall change in risk imparted by the defective diode derived in section 2.1 of this study concludes an overall failure of 1 to best reflect the actual conditions.

APPENDIX D

DG2 VOLTAGE CONTROL BOARD DIODE FAILURE FIRE-LOOP EVALUATION

Introduction

During surveillance testing on January 18, 2007 the Division 2 Emergency Diesel Generator (DG2) tripped unexpectedly after running for approximately 4 hours in automatic voltage control mode. This paper evaluates the impact of internal fires on offsite AC power availability and recovery actions. Internal fires can contribute to the Incremental Conditional Core Damage Probability (ICCDP) for this condition, and that contribution is assessed using the results of the CNS IPEEE Internal Fire Analysis coupled with additional condition specific analysis.

This evaluation is limited to conditional fire initiated accident sequences where the DGs are demanded. Therefore, for the evaluated fire sequences to contribute to the overall ICCDP, they must cause a Loss of Offsite Power (LOOP). The LOOP can be caused in one of two ways. Either the fire physically damages equipment that causes offsite power to be lost, or it forces the operators to intentionally (per procedure) isolate offsite power from the plant. Sequences that include a partial LOOP event occurring as result of loss of the start-up transformer are also possible. However the onsite LOOP recovery (as addressed in 5.4POST-FIRE) from these sequences are not discussed here.

Evaluation Summary

Only two credible fires will cause a LOOP due to equipment damage. Those fire initiators are 1) a control room fire originating at either Vertical Board F or Board C, and 2) a fire in Division II critical switchgear room 1G. The latter switchgear room fire is not considered because this fire is assumed to disable Division II AC power regardless of the success of the DG2 voltage control board.

There are two locations in the control room where a fire can conceivably cause a LOOP. Both of these locations contain control circuits for the critical bus tie breakers from both the station startup transformer (SSST) and the emergency transformer (ESST). A fire in each location is considered a separate initiator. One of those sequences requires an unmitigated fire involving at least 4 feet of a control board to affect the necessary breakers. Both fire sequences would require a combination of hot shorts to open the breakers before the breaker control circuits were shorted to ground. The 69 kV transmission line that supplies the ESST does not have a local 69kV breaker and therefore the 86 Lockout and 87 Differential relays cannot de-energize the transformer. Instead the 86 Lockout and the 87 Differential relays cause the 4160 Volt breakers 1F and 1G to trip. Therefore, power from the ESST is recoverable by pulling the fuses at the breaker(s) and manually closing the breaker(s). If just one (out of two) of the 1G breaker control circuits is either not shorted to power (hot short) or blows a fuse due to a short to ground, the 1G critical AC bus will remain energized from an offsite source. Due to the required complexity of these fires, the probability of the short combinations is on the order of 1E-3. The four lockout relays are individually fused and required 125 VDC control power to operate. A fire creating a

short would have to simulate a CLOSED contact from an initiating device without blowing a control power fuse to actuate the lockout relay or affect current transformer wiring from the current transformer to the neutral over-current or differential relay causing the relay to actuate. The contribution to risk from these sequences is negligible.

There are several fires that result in the transfer of control of the plant to the ASD Panel. When this occurs operators are directed to isolate offsite power and then power bus 1G with DG2. These fire initiators are 1) a control room fire requiring evacuation, 2) a fire in the cable spreading room, 3) a fire in the cable expansion room, 4) a fire in the NE corner of the reactor building, and 5) a fire in the auxiliary relay room. Procedure 5.4FIRE-SD provides instructions on isolating offsite power and powering the plant from DG2. In these cases, the LOOP is administratively induced and fully recoverable if needed.

In response to the above sequences, the Emergency Response Organization (ERO) will be available after 60 minutes to assist operations in restoring offsite power if DG2 fails. (Refer to EAL 5.2.1, a fire that effects any system required to be operable, directs an Alert classification with ERO activation.) For example, if 4160 VAC bus1F is energized, an alternate breaker alignment could be use to power the 4160 VAC bus 1G (Div. II) loads that are controlled from the Alternate Shutdown (ASD) Panel.

Overview of CNS 4160 VAC Distribution Design

The configuration of the CNS offsite power sources and the main generator supply is illustrated in Figure 1. CNS supplies power to the grid at 345kV. The 345kV switchyard is designed with a "breaker and a half" scheme, so if the CNS Main Generator output breakers trip, the remainder of the 345kV yard is unaffected. The primary offsite power source at CNS is the Startup Station Service Transformer (SSST) which is supplied via a step-down transformer T2 from the 345kV switchyard. The SSST can also be supplied by a 161kV transmission line that leaves the site and terminates close to the city of Auburn.

At power, CNS normally supplies the non-1E and 1E 4160 VAC switchgear from the station unit auxiliary transformer (Normal Station Service Transformer or NSST). If the CNS generator trips or the NSST de-energizes without a generator trip, the station switchgear is designed to transfer station to the SSST if available via a "fast transfer". The fast transfer occurs within 3-5 cycles such that no loads are shed during this transfer. Since the 4160 volt Essential Buses 1F and 1G are supplied by 4160 Volt Buses A and B, the Essential Buses also "fast transfer" to the SSST.

The SSST is supplied by the 161kV CNS switchyard which is connected to the CNS 345kV switchyard via an auto-transformer and a 161kV switchyard via the CNS to Auburn 161kV transmission line. If the SSST is not available or the tie breakers between 4160 Volt Bus A and F (and B and G) trip, the Essential Buses 1F and 1G transfer to the Emergency Station Service Transformer via a short duration dead bus transfer.

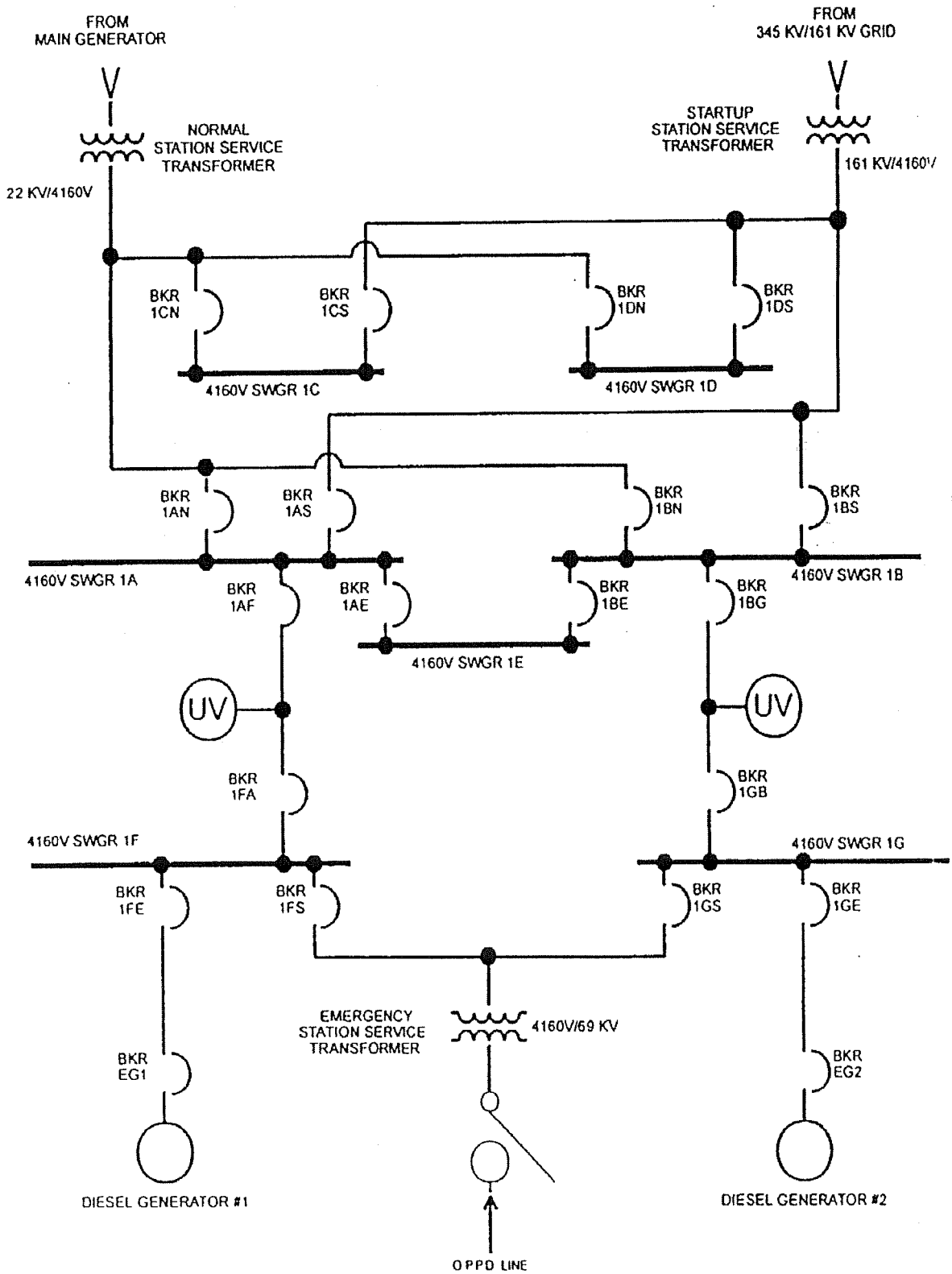

Figure 1. CNS 4160 VAC Distribution

The ESST is supplied by a 69kV sub-transmission line from the 69kV Substation near Brock, Nebraska which has multiple sources. A trip of the CNS main generator supply would have a minimal affect on the voltage at the Brock Substation. If the ESST is available and breakers 1FA and 1GB are OPEN, the ESST supply breakers (1FS and 1GS) to the 1F and 1G switchgear will close after a short delay (in which the 4160 motors trip) and the ESST will supply both class 1E switchgear.

If the ESST is also unavailable or one of the supply breakers (1FS or 1GS) does not close, the diesel generator(s) will supply the associated 4160 VAC switchgear.

Devices that will prevent the ESST or SSST from automatically supplying the 1E switchgear are the 86/EGP Lockout Relay (ESST Sudden Gas Pressure), 86/SGP (SSST Sudden Gas Pressure), 86/ST (SSST Differential Current) and the 86/STL (SSST Neutral Over-current). These lockout relays will trip the 4160 VAC supply breakers from the offsite power transformers and prevent remote closure from the control room of the 4160 VAC supply breakers. Reference B&R Drawing 3012, Sheet 4 Rev N11. The lockout relays associated with the SSST will also trip the 161kV breakers 1604 and 1606.

The four lockout relays associated with the ESST and SSST are located on Vertical Board F in the CNS Control Room. The 86/EGP is actuated by a normally open contact at the ESST. The 86/SGP is actuated by a normally open contact at the SSST. The 86/STL is actuated by over-current relay 51N/STL (also located on Board F) with a current transformer on the neutral of the SSST. The 86/ST is actuated by the differential relay 87/ST (also located in Board F) with current transformers located in the Non-Critical Switchgear Room.

Discussion of Fire Induced Unintentional LOOP

A Control Room fire originating at either Vertical Board F or Board C could cause a LOOP due to control circuit faults. The following is a discussion of the fire damage scenario needed to result in a LOOP.

Postulated Control Room Fire on Vertical Board F or Board C:

In order to cause 4160 VAC busses A, B, F and G to de-energize due to a fire under Board C in the control room, the following actions must be caused by the fire before the control room staff pull the fuses as part of the alternate shutdown procedure. These actions can either be caused by a fire a Board C or Vertical Board F but the result of the fire must cause damage that results in the following conditions:

1. The fire would have to cause the breakers 1AS and 1BS, the breakers that close to supply buses 1A and 1B from the SSST, to fail such that a trip signal would be present.
2. The fire would have to cause the wires for breakers 1FS and 1GS, the breakers that close to supply the buses 1F and 1G from the ESST, to fail such that a trip signal would be present.
3. The fire would have to cause the wires for breakers 1FE and 1GE, the breakers that close to supply the buses from the DGs, to fail such that a trip signal would be present.

All of the above failures would have to occur or the under-voltage protection scheme at CNS would cause the loads to be transferred to the next source. The under-voltage scheme only transfers loads in one direction, thus once the loads are transferred from the SSST, the under-voltage protection scheme would not cause the loads to be loaded back onto the SSST if it becomes available. This latter transfer would be a manual action only. These breakers could be manually reset from the Essential Switchgear Room once the trip signal is removed. The trip signal could be removed by the fire causing a short in the control wiring that would cause the Control Power Transformer fuses to blow or pulling these fuses at the breakers 1FS and/or 1GS and close the breakers manually.

The switches on Board C where the above control wires are terminated for division I breakers are located between 3 to 5 feet from the corresponding Division II switches on Board C in the control room. The fire would have to damage both switch groups and/or corresponding wire bundles in the manner described above in order to initiate a LOOP. The 86 and 87 relays are located on Vertical Board F. The four 86 lockout relays open the 4160 VAC tie breakers from the SSST and ESST in the event of either a high transformer pressure or a neutral over-current. The four relays are in close proximity to each other and could conceivably be involved in a single fire. One of these four relays controls the tie breakers from the ESST and the other three control the tie breakers from the SSST. For a fire to isolate all of the offsite power, it must involve the 86 relay for the ESST and at least one of the relays for the SSST. The fire must cause hot shorts that energize the 86 relay coils for all four tie breakers before any shorts to ground occur that blow the power supply fuses to these relays.

Fire Induced Intentional LOOP

For postulated fires that could impair the ability of the operators to control the plant from the control room, CNS procedure 5.4FIRE-SD direct the operators to isolate offsite power, and then supply power to the plant with DG2. Consequently, the LOOP is administratively induced and leaves the plant in a configuration where Division II equipment is controlled from the ASD panel (Div I equipment cannot be controlled from the ASD panel.) These postulated fire initiators are 1) fire in the cable spreading room (zone 9A), 2) a fire in the cable expansion room (zone 9B), 3) a fire in the auxiliary relay room (zone 8A), 4) a fire in each of the remaining 35 control room panels, and 5) a fire in the NE corner of the Reactor Building (zone 2A/2C).

If DG2 fails and cannot be recovered, the operations shift manager (SM) may determine that offsite power is available and restoration is needed. The ERO can then direct offsite power recovery using simple breaker operations combined with removing fuses. If needed, the NPPD Distribution Control Center located at Doniphan can operate 161kV switchyard breakers 1604 or 1606 to restore power to the SSST.

CNS IPEEE Internal Fire Analysis

The CNS IPEEE Internal Fire Analysis addressed the above fire zones. The results of that analysis are summarized in the following table. These sequences are limited to those that result in the potential for control room evacuation and induced plant centered LOOP. The screening values are the reported screening frequencies in the IPEEE adjusted for the condition exposure

time. This time was determined by taking the time from plant startup from the refueling outage to the DG2 failure (56 days).

Table 1.

Fire Location	Adjusted screening value	
Cable Spreading Room	6.31E-8	See Note 2
Cable Expansion Room	2.65E-8	See Note 2
Auxiliary Relay Room	2.81E-8	See Note 2
NE Corner of RX Building	6.26E-8	See Note 1, 2
Control Room Vertical Board F	1.28E-7	See Note 2
Control Room Board C	4.31E-8	See Note 2
Control Room All Other Panels	6.86E-8	See Note 2

Notes:

1. Value for the 903'-6" Rx Building Elevation that includes the NE corner; however, only the contribution from NE corner requires controlling the plant from the ASD.
2. Since the recovery of offsite AC power in each of these sequences does not involve a repair, can be performed from within the plant, and has significant procedural guidance, a non-recovery probability of 5E-1 is estimated and applied to each sequence.

Table 1 lists the applicable results for the base case, including various DG2 failure modes and illustrates the order of magnitude importance for areas that include induced LOOP sequences. The ICCDP for fire would essentially be the sum of the additional cutsets formed by replacing the DG2 failure events with the voltage control board failure event, and the normal DG non-recovery with the specific non-recovery of a failed voltage control board. The cutset multiplier to estimate this replacement would be just slightly over 1.0 and would result in an ICCDP of much less than 1E-6.

APPENDIX E

TIME WEIGHTED LOSP RECOVERIES FOR SBO SEQUENCES

1. OBJECTIVE

The purpose of this calculation file is to update of the offsite power recovery failure probability for the Cooper PRA. It also documents the calculation of time-weighted offsite power recovery failure factors for application in SBO sequences in which diesel generators run for a period of time before the SBO occurs.

2. INPUTS AND REFERENCES

The following inputs and references were used to generate offsite power recovery:

1. NUREG CR 6890, Reevaluation of Station Blackout Risk at Nuclear Power plants, published December, 2005

3. DEFINITIONS

Time-weighted LOSP Recovery:	This represents the average offsite power recovery failure probability assuming temporary operation of the EDG after loss of offsite power.

4. ASSUMPTIONS

Offsite Power Recovery

1. General industry loss of offsite power data as reported in References 1 are considered to be applicable to Cooper. Loss of offsite power events at other nuclear power plants documented in these references could also occur at Cooper due to the similarity in the design of their power grid. Pooling all applicable events would provide a better estimate of the offsite power recovery failure probability as a function of time than relying simply on data for Cooper.

Recovery Time

1. Refer to Appendix A for discussions of battery depletion times

5. ANALYSIS

Method Employed and Summary of Results

The analysis is performed in two steps:

Derive offsite power recovery failure probability as a function of time for three conditions:

Plant centered loss of offsite power
Grid centered loss of offsite power

Weather related loss of offsite power

Develop a time weighted offsite power recovery factor to account for the possibility that a diesel generator may run for a period of time before a station blackout occurs. Successful diesel operation, even if temporarily, can provide additional time to recover offsite power.

Offsite Power Recovery

The methodology used here develops a discrete probability profile generated from compilation of loss of offsite power durations which is then fit to a continuous distribution function using least-square curve fit. The data used in this analysis was collected by the NRC [References 1]. The loss of offsite power events were used to form the inputs for deriving the discrete offsite power failure recovery probability.

Time Weighted Offsite Power Recovery Factor:

The Cooper station blackout (SBO) sequences consider seven different means of reaching core damage.

Extended RCIC Success (Case 1) – Modeled recovery of 12 hours

RCIC Success (Case 2) – Modeled recovery of 10 hours

Extended HPCI Success (Case 3) – Modeled recovery of 10 hours

HPCI Success (Case 4) – Modeled recovery of 6 hours

One SORV, RCIC Success (Case 5) – Modeled recovery of 8 hours

Two SORV (Case 6) – Modeled recovery of 1 hour

Injection Failure (Case 7) – Modeled recovery of 1 hour

For the above scenarios, the current SBO accident sequences are quantified as though the SBO event occurs at the time of the loss of offsite power event (time = 0). This assumption is considered conservative from an offsite power recovery standpoint given that one or both EDGs may be available for a while to provide support for operation of AC powered accident mitigating systems. Temporary operation of an EDG would allow more time for operators to recover offsite power and thus would reduce the SBO CDF. Explicitly accounting for the SBO scenarios where the EDG(s) runs temporarily requires integration of the run failure rate and the offsite power recovery probability over the mission time of the accident sequence. A discrete approximation to this integration can be performed by breaking out the original 24 hour EDG mission time into equal run time segments (1 hour segments) with corresponding EDG failure probabilities. Since offsite power is lost at time zero, the latest time to recover power increases by an hour for each succeeding EDG successful run segment. Correspondingly, with each succeeding hour that the SBO event is delayed, the offsite power recovery failure probability would decrease. The event tree shown in Figure 5-1 illustrates the EDG run scenarios to be quantified to obtain a time-weighted offsite power recovery failure probability for the extended RCIC success sequences.

$$P_{tw} = \sum_{i=t1}^{t2} P_{FTR} * \underline{P}losp_i \Big/ \left(\sum_{i=1}^{t2} i * P_{FTR}\right) \qquad \text{Equation 1}$$

$$C_{tw} = P_{tw} / Plosp_{t=0}$$

P_{tw} = Averaged offsite power recovery factor

C_{tw} = Time Weighted Correction Factor

Figure 5-1: EDG Time Dependent Loss of Offsite Power Event Tree (Plant Centered)

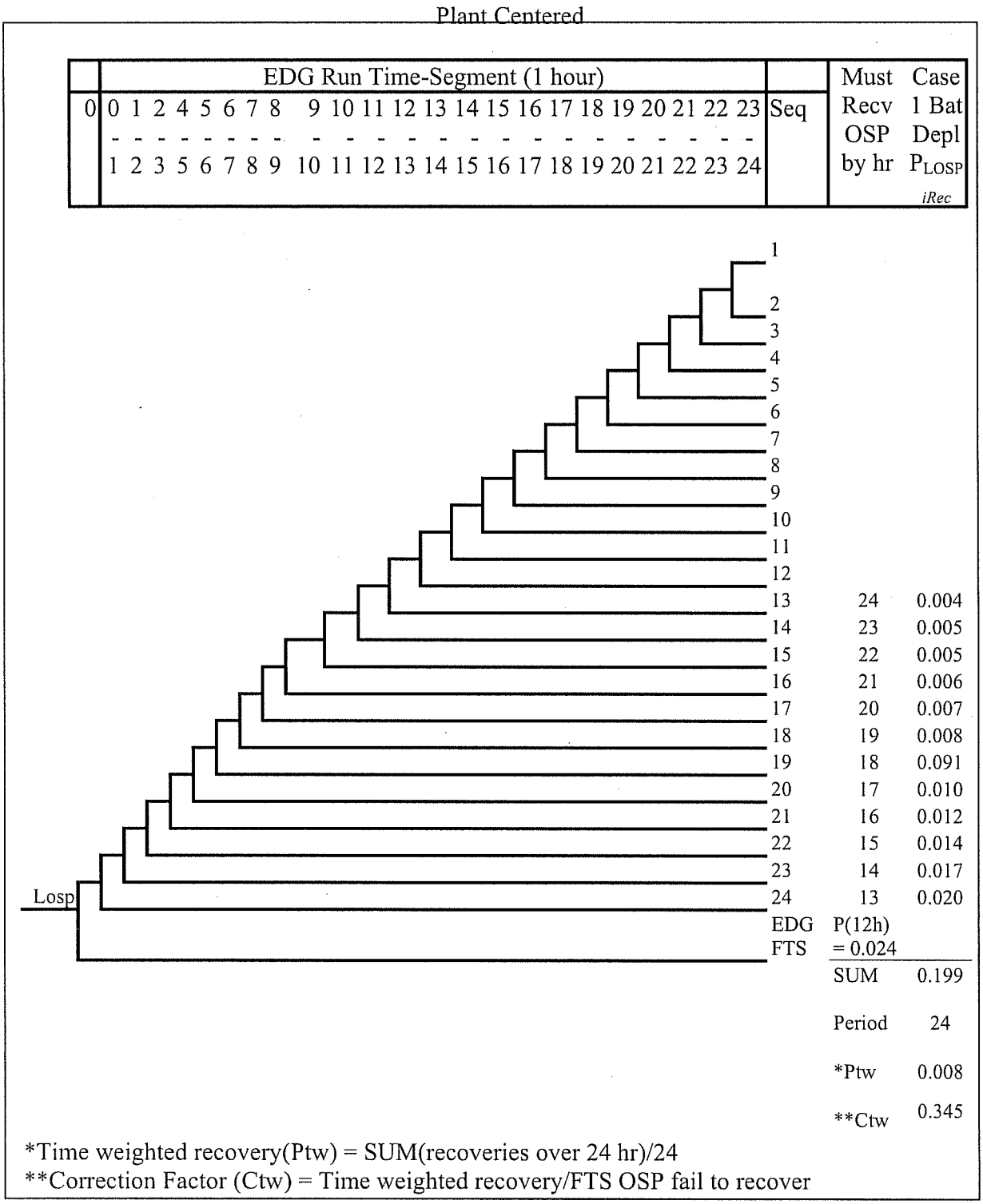

The time weighted correction factor would be applied to SBO accident sequence cut sets in which a diesel fail to run basic event occurred.

Analysis

Using the methods described in the preceding section, this section presents the derivation of the probability of failure to recover offsite power as a function of time.

As explained in Section 5.1, offsite power recovery factors are initially applied in the PRA as though the station blackout occurred at time zero. In fact, a portion of the station blackout accident sequences may have an emergency diesel generator available as a power source for a short period of time before the blackout occurs. These diesel generator failure to run sequences actually have a longer period of time for operators to recover offsite power than those sequences in which both offsite power and the diesels are lost at the LOSP event.

Tables 5-1 through 5-3 below compile the offsite power recovery failure as a function of the available recovery times for diesel generator failure to run sequences for each of the three LOSP event categories (plant centered, grid centered, weather related). The first column represents the sequence in the event tree shown in Figure 5-1. The second column is the time at which it is assumed that the last diesel generator fails to run following the loss of offsite power initiator. The columns labeled "AC Recovery Required" represent the time at which core damage is assumed and the associated offsite power recovery failure probability (PLosp_*i*). The offsite power recovery factor as a function of time (Plosp_i) is calculated as illustrated in Figure 5-1 for all seven cases.

Since offsite power recovery failure for the three SBO scenarios are represented by point values in the accident sequence quantification, it is necessary to obtain representative average values for sequences in which a diesel fail to run occurs. The average values are time-weighted on the EDG run cases and are calculated by the following equation.

$$P_{tw} = \sum_{i=t1}^{t2} Plosp_i \Big/ \sum_{i=1}^{t2} i$$

Equation 4

$$C_{tw} = P_{tw} / Plosp_{FTS}$$

Where:

P_{tw} = Time weighted loss of offsite power recovery factor

C_{tw} = Time weighted loss of offsite power recovery correction factor (normalized to recovery assuming blackout conditions at t=0)

$Plosp_i$ = Probability of offsite power recovery failure by time segment i

$Plosp_{FTS}$ = Probability of offsite power recovery failure assumes EDG fails at t=0

t1 = Recovery time (Case specific)

t2 = EDG run mission time (24 hr)

For example, for battery depletion scenarios, accident sequence quantification is performed assuming a failure to recover offsite power probability at 8 hours. The time weighted correction factor C_{tw} is calculated by averaging offsite power recovery failure over the 9 hour to 24 hour time frame and normalizing to the recovery failure probability at 8 hours. For any cut set

containing an EDG fail to run event, the time weighted correction factor (C_{tw}) is applied as a recovery factor. This approach to SBO accident sequence quantification assumes that the EDG mission time is set to 24 hours for all accident sequences.

Table 5-1: Offsite Power Recovery Failure Probability for SBO EDG Failure to Run Scenarios (Plant Centered)

EDG failure time in hrs	Extended RCIC Success - Case 1 -		RCIC Success -Case 2 -		Extended HPCI Success - Case 3 -		HPCI Success - Case 4 -		One SORV, RCIC Success - Case 5 -		Two SORV -Case 6 -		Injection Failure - Case 7 -	
	AC Recvry Required	AC Recvry Failure Prob (Plosp_*i*)	AC Recvry Required	AC Recvry Failure Prob (Plosp_*i*)	AC Recvry Required	AC Recvry Failure Prob (Plosp_*i*)	AC Recvry Required	AC Recvry Failure Prob (Plosp_*i*)	AC Recvry Required	AC Recvry Failure Prob (Plosp_*i*)	AC Recvry Required	AC Recvry Failure Prob (Plosp_*i*)	AC Recvry Required	AC Recvry Failure Prob (Plosp_*i*)
0	***12***	***1.710E-02***	***10***	***2.482E-02***	***10***	***2.482E-02***	***6***	***6.421E-02***	***8***	***3.831E-02***	***1***	***3.440E-01***	***1***	***3.440E-01***
1	13	1.444E-02	11	2.050E-02	11	2.050E-02	7	4.892E-02	9	3.058E-02	2	3.112E-01	2	3.112E-01
2	14	1.230E-02	12	1.710E-02	12	1.710E-02	8	3.831E-02	10	2.482E-02	3	1.871E-01	3	1.871E-01
3	15	1.056E-02	13	1.444E-02	13	1.444E-02	9	3.058E-02	11	2.050E-02	4	1.236E-01	4	1.236E-01
4	16	9.137E-03	14	1.230E-02	14	1.230E-02	10	2.482E-02	12	1.710E-02	5	8.723E-02	5	8.723E-02
5	17	7.968E-03	15	1.056E-02	15	1.056E-02	11	2.050E-02	13	1.444E-02	6	6.421E-02	6	6.421E-02
6	18	6.978E-03	16	9.137E-03	16	9.137E-03	12	1.710E-02	14	1.230E-02	7	4.892E-02	7	4.892E-02
7	19	6.151E-03	17	7.968E-03	17	7.968E-03	13	1.444E-02	15	1.056E-02	8	3.831E-02	8	3.831E-02
8	20	5.450E-03	18	6.978E-03	18	6.978E-03	14	1.230E-02	16	9.137E-03	9	3.058E-02	9	3.058E-02
9	21	4.838E-03	19	6.151E-03	19	6.151E-03	15	1.056E-02	17	7.968E-03	10	2.482E-02	10	2.482E-02
10	22	4.335E-03	20	5.450E-03	20	5.450E-03	16	9.137E-03	18	6.978E-03	11	2.050E-02	11	2.050E-02
11	23	3.885E-03	21	4.838E-03	21	4.838E-03	17	7.968E-03	19	6.151E-03	12	1.710E-02	12	1.710E-02
12	24	3.489E-03	22	4.335E-03	22	4.335E-03	18	6.978E-03	20	5.450E-03	13	1.444E-02	13	1.444E-02
13	-	-	23	3.885E-03	23	3.885E-03	19	6.151E-03	21	4.838E-03	14	1.230E-02	14	1.230E-02
14	-	-	24	3.489E-03	24	3.489E-03	20	5.450E-03	22	4.335E-03	15	1.056E-02	15	1.056E-02
15	-	-	-	-	-	-	21	4.838E-03	23	3.885E-03	16	9.137E-03	16	9.137E-03
16	-	-	-	-	-	-	22	4.335E-03	24	3.489E-03	17	7.968E-03	17	7.968E-03
17	-	-	-	-	-	-	23	3.885E-03	-	-	18	6.978E-03	18	6.978E-03
18	-	-	-	-	-	-	24	3.489E-03	-	-	19	6.151E-03	19	6.151E-03
19	-	-	-	-	-	-	-	-	-	-	20	5.450E-03	20	5.450E-03
20	-	-	-	-	-	-	-	-	-	-	21	4.838E-03	21	4.838E-03
21	-	-	-	-	-	-	-	-	-	-	22	4.335E-03	22	4.335E-03
22	-	-	-	-	-	-	-	-	-	-	23	3.885E-03	23	3.885E-03
23	-	-	-	-	-	-	-	-	-	-	24	3.489E-03	24	3.489E-03
24	-	-	-	-	-	-	-	-	-	-	-	-	-	-
Plosp_*i* Total		8.953E-02		1.271E-01		1.271E-01		2.698E-01		1.825E-01		1.043E+00		1.043E+00
P_{tw} (Time weighted recovery)		3.731E-03		5.298E-03		5.298E-03		1.124E-02		7.606E-03		4.346E-02		4.346E-02
C_{tw} (Conditional time weighted recovery)		2.181E-01		2.134E-01		2.134E-01		1.751E-01		1.985E-01		1.263E-01		1.263E-01

Table 5-2: Offsite Power Recovery Failure Probability for SBO EDG Fail to Run Scenarios (Grid Centered)

Event Tree Seq (Figure 5-1)	EDG failure time in hrs	Extended RCIC Success - Case 1 -		RCIC Success -Case 2 -		Extended HPCI Success - Case 3 -		HPCI Success - Case 4 -		One SORV, RCIC Success - Case 5 -		Two SORV -Case 6 -		Injection Failure - Case 7 -	
		AC Recvry Required	AC Recvry Failure Prob (Plosp_*i*)	AC Recvry Required	AC Recvry Failure Prob (Plosp_*i*)	AC Recvry Required	AC Recvry Failure Prob (Plosp_*i*)	AC Recvry Required	AC Recvry Failure Prob (Plosp_*i*)	AC Recvry Required	AC Recvry Failure Prob (Plosp_*i*)	AC Recvry Required	AC Recvry Failure Prob (Plosp_*i*)	AC Recvry Required	AC Recvry Failure Prob (Plosp_*i*)
EDG FTS	***0***	***12***	######	***10***	######	***10***	######	***6***	######	***8***	######	***1***	***6.110E-01***	***1***	***6.110E-01***
24	1	13	0.020	11	2.958E-02	11	2.958E-02	7	7.394E-02	9	4.521E-02	2	4.315E-01	2	4.315E-01
23	2	14	0.017	12	2.424E-02	12	2.424E-02	8	5.733E-02	10	3.636E-02	3	2.752E-01	3	2.752E-01
22	3	15	0.014	13	2.024E-02	13	2.024E-02	9	4.521E-02	11	2.958E-02	4	1.867E-01	4	1.867E-01
21	4	16	0.012	14	1.697E-02	14	1.697E-02	10	3.636E-02	12	2.424E-02	5	1.321E-01	5	1.321E-01
20	5	17	0.010	15	1.430E-02	15	1.430E-02	11	2.958E-02	13	2.024E-02	6	9.758E-02	6	9.758E-02
19	6	18	0.091	16	1.224E-02	16	1.224E-02	12	2.424E-02	14	1.697E-02	7	7.394E-02	7	7.394E-02
18	7	19	0.008	17	1.050E-02	17	1.050E-02	13	2.024E-02	15	1.430E-02	8	5.733E-02	8	5.733E-02
17	8	20	0.007	18	9.055E-02	18	9.055E-02	14	1.697E-02	16	1.224E-02	9	4.521E-02	9	4.521E-02
16	9	21	0.006	19	7.867E-03	19	7.867E-03	15	1.430E-02	17	1.050E-02	10	3.636E-02	10	3.636E-02
15	10	22	0.005	20	6.861E-03	20	6.861E-03	16	1.224E-02	18	9.055E-02	11	2.958E-02	11	2.958E-02
14	11	23	0.005	21	6.012E-03	21	6.012E-03	17	1.050E-02	19	7.867E-03	12	2.424E-02	12	2.424E-02
13	12	24	0.004	22	5.297E-03	22	5.297E-03	18	9.055E-02	20	6.861E-03	13	2.024E-02	13	2.024E-02
12	13	-	-	23	4.679E-03	23	4.679E-03	19	7.867E-03	21	6.012E-03	14	1.697E-02	14	1.697E-02
11	14	-	-	24	4.145E-03	24	4.145E-03	20	6.861E-03	22	5.297E-03	15	1.430E-02	15	1.430E-02
10	15	-	-	-	-	-	-	21	6.012E-03	23	4.679E-03	16	1.224E-02	16	1.224E-02
9	16	-	-	-	-	-	-	22	5.297E-03	24	4.145E-03	17	1.050E-02	17	1.050E-02
8	17	-	-	-	-	-	-	23	4.679E-03	-	-	18	9.055E-02	18	9.055E-02
7	18	-	-	-	-	-	-	24	4.145E-03	-	-	19	7.867E-03	19	7.867E-03
6	19	-	-	-	-	-	-	-	-	-	-	20	6.861E-03	20	6.861E-03
5	20	-	-	-	-	-	-	-	-	-	-	21	6.012E-03	21	6.012E-03
4	21	-	-	-	-	-	-	-	-	-	-	22	5.297E-03	22	5.297E-03
3	22	-	-	-	-	-	-	-	-	-	-	23	4.679E-03	23	4.679E-03
2	23	-	-	-	-	-	-	-	-	-	-	24	4.145E-03	24	4.145E-03
1	24	-	-	-	-	-	-	-	-	-	-	-	-	-	-
	Plosp_*i* Total		1.997E-01		2.535E-01		2.535E-01		4.663E-01		3.351E-01		1.589E+00		1.589E+00
	P_{tw} (Time weighted recovery)		8.319E-03		1.056E-02		1.056E-02		1.943E-02		1.396E-02		6.622E-02		6.622E-02
	C_{tw} (Conditional time weighted recovery)		3.432E-01		2.904E-01		2.904E-01		1.991E-01		2.435E-01		1.084E-01		1.084E-01

Table 5-3: Offsite Power Recovery Failure Probability for EDG Run Scenarios (Weather Related)

Event Tree Seq (Figure 5-1)	EDG failure time in hrs	Extended RCIC Success - Case 1 -		RCIC Success -Case 2 -		Extended HPCI Success - Case 3 -		HPCI Success - Case 4 -		One SORV, RCIC Success - Case 5 -		Two SORV -Case 6 -		Injection Failure - Case 7 -	
		AC Recvry Required	AC Recvry Failure Prob (Plosp_*i*)	AC Recvry Required	AC Recvry Failure Prob (Plosp_*i*)	AC Recvry Required	AC Recvry Failure Prob (Plosp_*i*)	AC Recvry Required	AC Recvry Failure Prob (Plosp_*i*)	AC Recvry Required	AC Recvry Failure Prob (Plosp_*i*)	AC Recvry Required	AC Recvry Failure Prob (Plosp_*i*)	AC Recvry Required	AC Recvry Failure Prob (Plosp_*i*)
EDG FTS	***0***	***12***	***2.549E-01***	***10***	***2.885E-01***	***10***	***2.885E-01***	***6***	***3.972E-01***	***8***	***3.338E-01***	***1***	***6.560E-01***	***1***	***6.560E-01***
24	1	13	2.406E-01	11	2.704E-01	11	2.704E-01	7	3.622E-01	9	3.092E-01	2	6.727E-01	2	6.727E-01
23	2	14	2.277E-01	12	2.549E-01	12	2.549E-01	8	3.338E-01	10	2.885E-01	3	5.679E-01	3	5.679E-01
22	3	15	2.160E-01	13	2.406E-01	13	2.406E-01	9	3.092E-01	11	2.704E-01	4	4.942E-01	4	4.942E-01
21	4	16	2.057E-01	14	2.277E-01	14	2.277E-01	10	2.885E-01	12	2.549E-01	5	4.398E-01	5	4.398E-01
20	5	17	1.966E-01	15	2.160E-01	15	2.160E-01	11	2.704E-01	13	2.406E-01	6	3.972E-01	6	3.972E-01
19	6	18	1.876E-01	16	2.057E-01	16	2.057E-01	12	2.549E-01	14	2.277E-01	7	3.622E-01	7	3.622E-01
18	7	19	1.798E-01	17	1.966E-01	17	1.966E-01	13	2.406E-01	15	2.160E-01	8	3.338E-01	8	3.338E-01
17	8	20	1.721E-01	18	1.876E-01	18	1.876E-01	14	2.277E-01	16	2.057E-01	9	3.092E-01	9	3.092E-01
16	9	21	1.656E-01	19	1.798E-01	19	1.798E-01	15	2.160E-01	17	1.966E-01	10	2.885E-01	10	2.885E-01
15	10	22	1.591E-01	20	1.721E-01	20	1.721E-01	16	2.057E-01	18	1.876E-01	11	2.704E-01	11	2.704E-01
14	11	23	1.539E-01	21	1.656E-01	21	1.656E-01	17	1.966E-01	19	1.798E-01	12	2.549E-01	12	2.549E-01
13	12	24	1.475E-01	22	1.591E-01	22	1.591E-01	18	1.876E-01	20	1.721E-01	13	2.406E-01	13	2.406E-01
12	13	-	-	23	1.539E-01	23	1.539E-01	19	1.798E-01	21	1.656E-01	14	2.277E-01	14	2.277E-01
11	14	-	-	24	1.475E-01	24	1.475E-01	20	1.721E-01	22	1.591E-01	15	2.160E-01	15	2.160E-01
10	15	-	-	-	-	-	-	21	1.656E-01	23	1.539E-01	16	2.057E-01	16	2.057E-01
9	16	-	-	-	-	-	-	22	1.591E-01	24	1.475E-01	17	1.966E-01	17	1.966E-01
8	17	-	-	-	-	-	-	23	1.539E-01	-	-	18	1.876E-01	18	1.876E-01
7	18	-	-	-	-	-	-	24	1.475E-01	-	-	19	1.798E-01	19	1.798E-01
6	19	-	-	-	-	-	-	-	-	-	-	20	1.721E-01	20	1.721E-01
5	20	-	-	-	-	-	-	-	-	-	-	21	1.656E-01	21	1.656E-01
4	21	-	-	-	-	-	-	-	-	-	-	22	1.591E-01	22	1.591E-01
3	22	-	-	-	-	-	-	-	-	-	-	23	1.539E-01	23	1.539E-01
2	23	-	-	-	-	-	-	-	-	-	-	24	1.475E-01	24	1.475E-01
1	24	-	-	-	-	-	-	-	-	-	-	-	-	-	-
	Plosp_*i* Total		2.252E+00		2.777E+00		2.777E+00		4.071E+00		3.375E+00		6.643E+00		6.643E+00
	P_{tw} (Time weighted recovery)		9.384E-02		1.157E-01		1.157E-01		1.696E-01		1.406E-01		2.768E-01		2.768E-01
	C_{tw} (Conditional time weighted recovery)		3.682E-01		4.012E-01		4.012E-01		4.271E-01		4.214E-01		4.219E-01		4.219E-01

The above tables derive conditional time weighted recovery factors for the CNS PRA model and were used to derive values in Table 2.2.2-1 Because the CNS model combines plant centered and switchyard centered events into one initiator with recoveries, no specific switchyard recovery factors are provided.

A separate analysis, specific to Cooper Nuclear Station, was performed to provide recovery factors for switchyard centered events. This is reflected in the following 4 tables (5.4 through 5.7).

The recovery factors in Tables 5.4 through 5.7 are provided to allow other analyst the option to apply recovery time weighted factors should the analyst's PRA model separate the switchyard centered LOSP recoveries from the plant centered LOSP recoveries.

Table 5-4: Offsite Power Recovery Failure Probability for EDG Run Scenarios (Switchyard-Centered)

	EDG failure time in hrs	Extended RCIC Success - Case 1 -		RCIC Success -Case 2 -		Extended HPCI Success - Case 3 -		HPCI Success - Case 4 -		One SORV, RCIC Success - Case 5 -		One SORV, No Pressure Supp or 2 SORV -Case 6 -		Injection Failure - Case 7 -	
		AC Recvry Required	AC Recvry Failure Prob (Plosp_*i*)	AC Recvry Required	AC Recvry Failure Prob (Plosp_*i*)	AC Recvry Required	AC Recvry Failure Prob (Plosp_*i*)	AC Recvry Required	AC Recvry Failure Prob (Plosp_*i*)	AC Recvry Required	AC Recvry Failure Prob (Plosp_*i*)	AC Recvry Required	AC Recvry Failure Prob (Plosp_*i*)	AC Recvry Required	AC Recvry Failure Prob (Plosp_*i*)
	0	***12***	***2.885E-02***	***10***	***3.871E-02***	***10***	***3.871E-02***	***6***	***8.140E-02***	***8***	***5.434E-02***	***1***	***4.612E-01***	***1***	***4.612E-01***
24	1	13	2.523E-02	11	3.326E-02	11	3.326E-02	7	6.585E-02	9	4.556E-02	2	2.744E-01	2	2.744E-01
23	2	14	2.223E-02	12	2.885E-02	12	2.885E-02	8	5.434E-02	10	3.871E-02	3	1.858E-01	3	1.858E-01
22	3	15	1.971E-02	13	2.523E-02	13	2.523E-02	9	4.556E-02	11	3.326E-02	4	1.352E-01	4	1.352E-01
21	4	16	1.758E-02	14	2.223E-02	14	2.223E-02	10	3.871E-02	12	2.885E-02	5	1.032E-01	5	1.032E-01
20	5	17	1.576E-02	15	1.971E-02	15	1.971E-02	11	3.326E-02	13	2.523E-02	6	8.140E-02	6	8.140E-02
19	6	18	1.420E-02	16	1.758E-02	16	1.758E-02	12	2.885E-02	14	2.223E-02	7	6.585E-02	7	6.585E-02
18	7	19	1.284E-02	17	1.576E-02	17	1.576E-02	13	2.523E-02	15	1.971E-02	8	5.434E-02	8	5.434E-02
17	8	20	1.166E-02	18	1.420E-02	18	1.420E-02	14	2.223E-02	16	1.758E-02	9	4.556E-02	9	4.556E-02
16	9	21	1.062E-02	19	1.284E-02	19	1.284E-02	15	1.971E-02	17	1.576E-02	10	3.871E-02	10	3.871E-02
15	10	22	9.713E-03	20	1.166E-02	20	1.166E-02	16	1.758E-02	18	1.420E-02	11	3.326E-02	11	3.326E-02
14	11	23	8.907E-03	21	1.062E-02	21	1.062E-02	17	1.576E-02	19	1.284E-02	12	2.885E-02	12	2.885E-02
13	12	24	8.191E-03	22	9.713E-03	22	9.713E-03	18	1.420E-02	20	1.166E-02	13	2.523E-02	13	2.523E-02
12	13	-	-	23	8.907E-03	23	8.907E-03	19	1.284E-02	21	1.062E-02	14	2.223E-02	14	2.223E-02
11	14	-	-	24	8.191E-03	24	8.191E-03	20	1.166E-02	22	9.713E-03	15	1.971E-02	15	1.971E-02
10	15	-	-	-	-	-	-	21	1.062E-02	23	8.907E-03	16	1.758E-02	16	1.758E-02
9	16	-	-	-	-	-	-	22	9.713E-03	24	8.191E-03	17	1.576E-02	17	1.576E-02
8	17	-	-	-	-	-	-	23	8.907E-03	-	-	18	1.420E-02	18	1.420E-02
7	18	-	-	-	-	-	-	24	8.191E-03	-	-	19	1.284E-02	19	1.284E-02
6	19	-	-	-	-	-	-	-	-	-	-	20	1.166E-02	20	1.166E-02
5	20	-	-	-	-	-	-	-	-	-	-	21	1.062E-02	21	1.062E-02
4	21	-	-	-	-	-	-	-	-	-	-	22	9.713E-03	22	9.713E-03
3	22	-	-	-	-	-	-	-	-	-	-	23	8.907E-03	23	8.907E-03
2	23	-	-	-	-	-	-	-	-	-	-	24	8.191E-03	24	8.191E-03
1	24	-	-	-	-	-	-	-	-	-	-	-	-	-	-
	Plosp *i* Total		1.767E-01		2.388E-01		2.388E-01		4.432E-01		3.230E-01		1.223E+00		1.223E+00
	P_{tw} (Time weighted recovery)		7.360E-03		9.948E-03		9.948E-03		1.847E-02		1.346E-02		5.097E-02		5.097E-02
	C_{tw} (Conditional time weighted recovery)		2.552E-01		2.570E-01		2.570E-01		2.269E-01		2.477E-01		1.105E-01		1.105E-01

Table 5-5: Offsite Power Recovery Failure Probability for EDG Run Scenarios (Weather Related)

	EDG failure time in hrs	Extended RCIC Success - Case 1 -		RCIC Success -Case 2 -		Extended HPCI Success - Case 3 -		HPCI Success - Case 4 -		One SORV, RCIC Success - Case 5 -		One SORV, No Pressure Supp or 2 SORV -Case 6 -		Injection Failure - Case 7 -	
		AC Recvry Required	AC Recvry Failure Prob (Plosp_*i*)	AC Recvry Required	AC Recvry Failure Prob (Plosp_*i*)	AC Recvry Required	AC Recvry Failure Prob (Plosp_*i*)	AC Recvry Required	AC Recvry Failure Prob (Plosp_*i*)	AC Recvry Required	AC Recvry Failure Prob (Plosp_*i*)	AC Recvry Required	AC Recvry Failure Prob (Plosp_*i*)	AC Recvry Required	AC Recvry Failure Prob (Plosp_*i*)
	0	***12***	***6.129E-02***	***10***	*******	***10***	*******	***6***	***1.319E-01***	***8***	*******	***1***	***4.941E-01***	***1***	***4.941E-01***
24	1	13	5.554E-02	11	6.804E-02	11	6.804E-02	7	1.127E-01	9	8.581E-02	2	3.295E-01	2	3.295E-01
23	2	14	5.061E-02	12	6.129E-02	12	6.129E-02	8	9.774E-02	10	7.609E-02	3	2.448E-01	3	2.448E-01
22	3	15	4.634E-02	13	5.554E-02	13	5.554E-02	9	8.581E-02	11	6.804E-02	4	1.927E-01	4	1.927E-01
21	4	16	4.261E-02	14	5.061E-02	14	5.061E-02	10	7.609E-02	12	6.129E-02	5	1.574E-01	5	1.574E-01
20	5	17	3.934E-02	15	4.634E-02	15	4.634E-02	11	6.804E-02	13	5.554E-02	6	1.319E-01	6	1.319E-01
19	6	18	3.644E-02	16	4.261E-02	16	4.261E-02	12	6.129E-02	14	5.061E-02	7	1.127E-01	7	1.127E-01
18	7	19	3.386E-02	17	3.934E-02	17	3.934E-02	13	5.554E-02	15	4.634E-02	8	9.774E-02	8	9.774E-02
17	8	20	3.155E-02	18	3.644E-02	18	3.644E-02	14	5.061E-02	16	4.261E-02	9	8.581E-02	9	8.581E-02
16	9	21	2.948E-02	19	3.386E-02	19	3.386E-02	15	4.634E-02	17	3.934E-02	10	7.609E-02	10	7.609E-02
15	10	22	2.761E-02	20	3.155E-02	20	3.155E-02	16	4.261E-02	18	3.644E-02	11	6.804E-02	11	6.804E-02
14	11	23	2.592E-02	21	2.948E-02	21	2.948E-02	17	3.934E-02	19	3.386E-02	12	6.129E-02	12	6.129E-02
13	12	24	2.438E-02	22	2.761E-02	22	2.761E-02	18	3.644E-02	20	3.155E-02	13	5.554E-02	13	5.554E-02
12	13	-	-	23	2.592E-02	23	2.592E-02	19	3.386E-02	21	2.948E-02	14	5.061E-02	14	5.061E-02
11	14	-	-	24	2.438E-02	24	2.438E-02	20	3.155E-02	22	2.761E-02	15	4.634E-02	15	4.634E-02
10	15	-	-	-	-	-	-	21	2.948E-02	23	2.592E-02	16	4.261E-02	16	4.261E-02
9	16	-	-	-	-	-	-	22	2.761E-02	24	2.438E-02	17	3.934E-02	17	3.934E-02
8	17	-	-	-	-	-	-	23	2.592E-02	-	-	18	3.644E-02	18	3.644E-02
7	18	-	-	-	-	-	-	24	2.438E-02	-	-	19	3.386E-02	19	3.386E-02
6	19	-	-	-	-	-	-	-	-	-	-	20	3.155E-02	20	3.155E-02
5	20	-	-	-	-	-	-	-	-	-	-	21	2.948E-02	21	2.948E-02
4	21	-	-	-	-	-	-	-	-	-	-	22	2.761E-02	22	2.761E-02
3	22	-	-	-	-	-	-	-	-	-	-	23	2.592E-02	23	2.592E-02
2	23	-	-	-	-	-	-	-	-	-	-	24	2.438E-02	24	2.438E-02
1	24	-	-	-	-	-	-	-	-	-	-	-	-	-	-
	Plosp_*i* Total		4.437E-01		5.730E-01		5.730E-01		9.454E-01		7.349E-01		2.002E+00		2.002E+00
	P_{tw} (Time weighted recovery)		1.849E-02		2.388E-02		2.388E-02		3.939E-02		3.062E-02		8.340E-02		8.340E-02
	C_{tw} (Conditional time weighted recovery)		3.017E-01		3.138E-01		3.138E-01		2.986E-01		3.133E-01		1.688E-01		1.688E-01

Table 5-6: Offsite Power Recovery Failure Probability for EDG Run Scenarios (Plant-Centered)

	EDG failure time in hrs	Extended RCIC Success - Case 1 -		RCIC Success -Case 2 -		Extended HPCI Success - Case 3 -		HPCI Success - Case 4 -		One SORV, RCIC Success - Case 5 -		One SORV, No Pressure Supp or 2 SORV -Case 6 -		Injection Failure - Case 7 -	
		AC Recvry Required	AC Recvry Failure Prob (Plosp_*i*)	AC Recvry Required	AC Recvry Failure Prob (Plosp_*i*)	AC Recvry Required	AC Recvry Failure Prob (Plosp_*i*)	AC Recvry Required	AC Recvry Failure Prob (Plosp_*i*)	AC Recvry Required	AC Recvry Failure Prob (Plosp_*i*)	AC Recvry Required	AC Recvry Failure Prob (Plosp_*i*)	AC Recvry Required	AC Recvry Failure Prob (Plosp_*i*)
	0	***12***	***3.265E-02***	***10***	***4.132E-02***	***10***	***4.132E-02***	***6***	***7.575E-02***	***8***	***5.436E-02***	***1***	***3.530E-01***	***1***	***3.530E-01***
24	1	13	2.936E-02	11	3.658E-02	11	3.658E-02	7	6.361E-02	9	4.712E-02	2	2.159E-01	2	2.159E-01
23	2	14	2.655E-02	12	3.265E-02	12	3.265E-02	8	5.436E-02	10	4.132E-02	3	1.526E-01	3	1.526E-01
22	3	15	2.415E-02	13	2.936E-02	13	2.936E-02	9	4.712E-02	11	3.658E-02	4	1.160E-01	4	1.160E-01
21	4	16	2.207E-02	14	2.655E-02	14	2.655E-02	10	4.132E-02	12	3.265E-02	5	9.231E-02	5	9.231E-02
20	5	17	2.025E-02	15	2.415E-02	15	2.415E-02	11	3.658E-02	13	2.936E-02	6	7.575E-02	6	7.575E-02
19	6	18	1.866E-02	16	2.207E-02	16	2.207E-02	12	3.265E-02	14	2.655E-02	7	6.361E-02	7	6.361E-02
18	7	19	1.725E-02	17	2.025E-02	17	2.025E-02	13	2.936E-02	15	2.415E-02	8	5.436E-02	8	5.436E-02
17	8	20	1.600E-02	18	1.866E-02	18	1.866E-02	14	2.655E-02	16	2.207E-02	9	4.712E-02	9	4.712E-02
16	9	21	1.488E-02	19	1.725E-02	19	1.725E-02	15	2.415E-02	17	2.025E-02	10	4.132E-02	10	4.132E-02
15	10	22	1.388E-02	20	1.600E-02	20	1.600E-02	16	2.207E-02	18	1.866E-02	11	3.658E-02	11	3.658E-02
14	11	23	1.298E-02	21	1.488E-02	21	1.488E-02	17	2.025E-02	19	1.725E-02	12	3.265E-02	12	3.265E-02
13	12	24	1.216E-02	22	1.388E-02	22	1.388E-02	18	1.866E-02	20	1.600E-02	13	2.936E-02	13	2.936E-02
12	13	-	-	23	1.298E-02	23	1.298E-02	19	1.725E-02	21	1.488E-02	14	2.655E-02	14	2.655E-02
11	14	-	-	24	1.216E-02	24	1.216E-02	20	1.600E-02	22	1.388E-02	15	2.415E-02	15	2.415E-02
10	15	-	-	-	-	-	-	21	1.488E-02	23	1.298E-02	16	2.207E-02	16	2.207E-02
9	16	-	-	-	-	-	-	22	1.388E-02	24	1.216E-02	17	2.025E-02	17	2.025E-02
8	17	-	-	-	-	-	-	23	1.298E-02	-	-	18	1.866E-02	18	1.866E-02
7	18	-	-	-	-	-	-	24	1.216E-02	-	-	19	1.725E-02	19	1.725E-02
6	19	-	-	-	-	-	-	-	-	-	-	20	1.600E-02	20	1.600E-02
5	20	-	-	-	-	-	-	-	-	-	-	21	1.488E-02	21	1.488E-02
4	21	-	-	-	-	-	-	-	-	-	-	22	1.388E-02	22	1.388E-02
3	22	-	-	-	-	-	-	-	-	-	-	23	1.298E-02	23	1.298E-02
2	23	-	-	-	-	-	-	-	-	-	-	24	1.216E-02	24	1.216E-02
1	24	-	-	-	-	-	-	-	-	-	-	-	-	-	-
	Plosp *i* Total		2.282E-01		2.974E-01		2.974E-01		5.038E-01		3.858E-01		1.156E+00		1.156E+00
	P_{tw} (Time weighted recovery)		9.507E-03		1.239E-02		1.239E-02		2.099E-02		1.608E-02		4.818E-02		4.818E-02
	C_{tw} (Conditional time weighted recovery)		2.911E-01		2.999E-01		2.999E-01		2.771E-01		2.957E-01		1.365E-01		1.365E-01

Table 5-7: Offsite Power Recovery Failure Probability for EDG Run Scenarios (Grid-Centered)

	EDG failure time in hrs	Extended RCIC Success - Case 1 -		RCIC Success -Case 2 -		Extended HPCI Success - Case 3 -		HPCI Success - Case 4 -		One SORV, RCIC Success - Case 5 -		One SORV, No Pressure Supp or 2 SORV -Case 6 -		Injection Failure - Case 7 -	
		AC Recvry Required	AC Recvry Failure Prob (Plosp_*i*)	AC Recvry Required	AC Recvry Failure Prob (Plosp_*i*)	AC Recvry Required	AC Recvry Failure Prob (Plosp_*i*)	AC Recvry Required	AC Recvry Failure Prob (Plosp_*i*)	AC Recvry Required	AC Recvry Failure Prob (Plosp_*i*)	AC Recvry Required	AC Recvry Failure Prob (Plosp_*i*)	AC Recvry Required	AC Recvry Failure Prob (Plosp_*i*)
	0	***12***	***2.207E-02***	***10***	***2.911E-02***	***10***	***2.911E-02***	***6***	***5.919E-02***	***8***	***4.016E-02***	***1***	***3.462E-01***	***1***	***3.462E-01***
24	1	13	0.019	11	2.523E-02	11	2.523E-02	7	4.826E-02	9	3.396E-02	2	1.986E-01	2	1.986E-01
23	2	14	0.017	12	2.207E-02	12	2.207E-02	8	4.016E-02	10	2.911E-02	3	1.334E-01	3	1.334E-01
22	3	15	0.015	13	1.947E-02	13	1.947E-02	9	3.396E-02	11	2.523E-02	4	9.719E-02	4	9.719E-02
21	4	16	0.014	14	1.730E-02	14	1.730E-02	10	2.911E-02	12	2.207E-02	5	7.452E-02	5	7.452E-02
20	5	17	0.013	15	1.547E-02	15	1.547E-02	11	2.523E-02	13	1.947E-02	6	5.919E-02	6	5.919E-02
19	6	18	0.011	16	1.391E-02	16	1.391E-02	12	2.207E-02	14	1.730E-02	7	4.826E-02	7	4.826E-02
18	7	19	0.010	17	1.257E-02	17	1.257E-02	13	1.947E-02	15	1.547E-02	8	4.016E-02	8	4.016E-02
17	8	20	0.010	18	1.141E-02	18	1.141E-02	14	1.730E-02	16	1.391E-02	9	3.396E-02	9	3.396E-02
16	9	21	0.009	19	1.040E-02	19	1.040E-02	15	1.547E-02	17	1.257E-02	10	2.911E-02	10	2.911E-02
15	10	22	0.008	20	9.510E-03	20	9.510E-03	16	1.391E-02	18	1.141E-02	11	2.523E-02	11	2.523E-02
14	11	23	0.007	21	8.730E-03	21	8.730E-03	17	1.257E-02	19	1.040E-02	12	2.207E-02	12	2.207E-02
13	12	24	0.007	22	8.038E-03	22	8.038E-03	18	1.141E-02	20	9.510E-03	13	1.947E-02	13	1.947E-02
12	13	-	-	23	7.423E-03	23	7.423E-03	19	1.040E-02	21	8.730E-03	14	1.730E-02	14	1.730E-02
11	14	-	-	24	6.874E-03	24	6.874E-03	20	9.510E-03	22	8.038E-03	15	1.547E-02	15	1.547E-02
10	15	-	-	-	-	-	-	21	8.730E-03	23	7.423E-03	16	1.391E-02	16	1.391E-02
9	16	-	-	-	-	-	-	22	8.038E-03	24	6.874E-03	17	1.257E-02	17	1.257E-02
8	17	-	-	-	-	-	-	23	7.423E-03	-	-	18	1.141E-02	18	1.141E-02
7	18	-	-	-	-	-	-	24	6.874E-03	-	-	19	1.040E-02	19	1.040E-02
6	19	-	-	-	-	-	-	-	-	-	-	20	9.510E-03	20	9.510E-03
5	20	-	-	-	-	-	-	-	-	-	-	21	8.730E-03	21	8.730E-03
4	21	-	-	-	-	-	-	-	-	-	-	22	8.038E-03	22	8.038E-03
3	22	-	-	-	-	-	-	-	-	-	-	23	7.423E-03	23	7.423E-03
2	23	-	-	-	-	-	-	-	-	-	-	24	6.874E-03	24	6.874E-03
1	24	-	-	-	-	-	-	-	-	-	-	-	-	-	-
	Plosp *i* Total		1.411E-01		1.884E-01		1.884E-01		3.399E-01		2.515E-01		9.028E-01		9.028E-01
	P_{tw} (Time weighted recovery)		5.879E-03		7.849E-03		7.849E-03		1.416E-02		1.048E-02		3.762E-02		3.762E-02
	C_{tw} (Conditional time weighted recovery)		2.663E-01		2.697E-01		2.697E-01		2.393E-01		2.609E-01		1.086E-01		1.086E-01